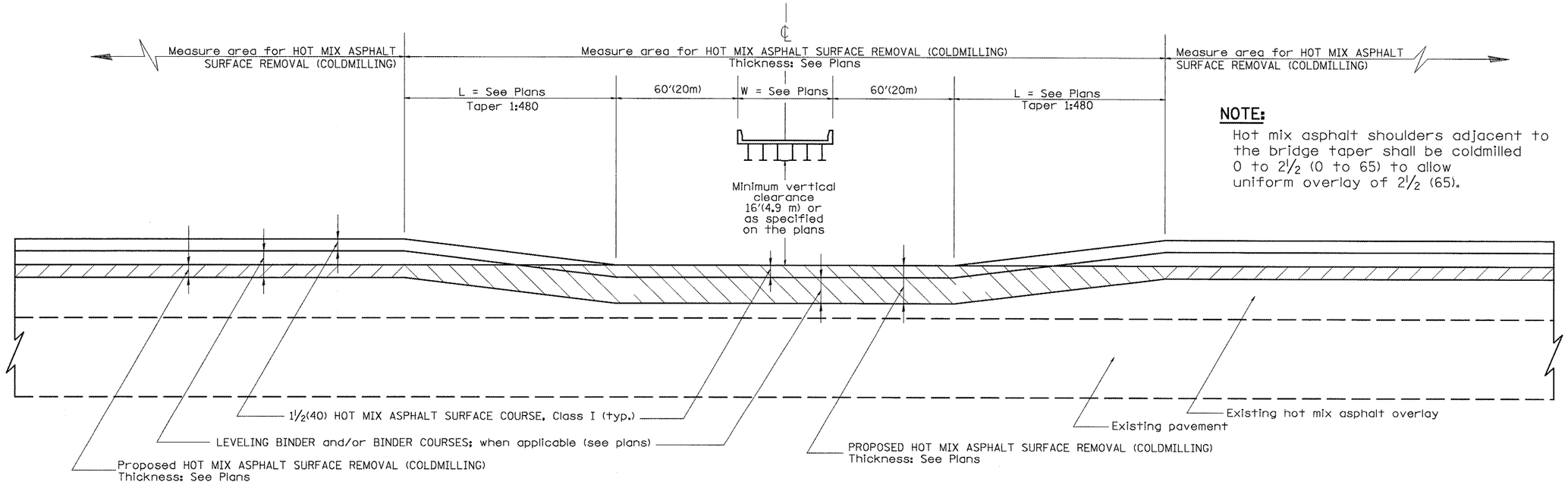

NOTE:

Hot mix asphalt shoulders adjacent to the bridge taper shall be coldmilled 0 to 2½ (0 to 65) to allow uniform overlay of 2½ (65).

CASE 1: WITH HOT MIX ASPHALT SURFACE REMOVAL (COLD MILLING)

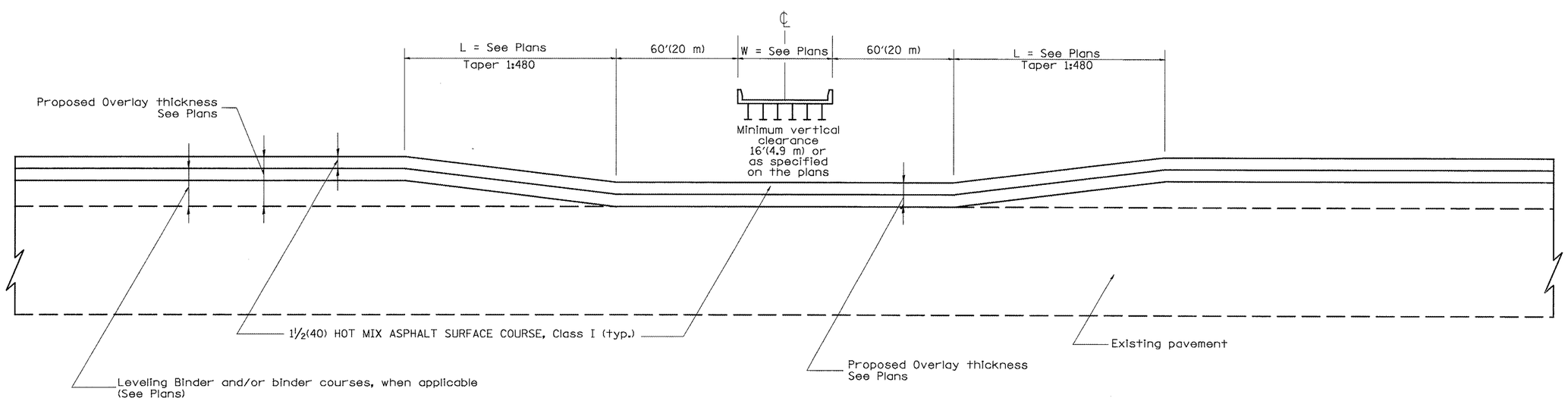

CASE 2: NO HOT MIX ASPHALT SURFACE REMOVAL (COLD MILLING)

All dimensions are in inches (millimeters) unless otherwise noted.

01-01-97	RENUM. C-23.03, NEW REVISION BOX	T.P.
10-16-06	REVISED TO 2007 SPEC.	M.A.

STATE OF ILLINOIS
DEPARTMENT OF TRANSPORTATION

PAVEMENT OVERLAY UNDER STRUCTURES
SPECIAL TREATMENT

NOT TO SCALE

CADD STD. 406001-D4

F.A.I. RTE.	SECTION	COUNTY	TOTAL SHEETS	SHEET NO.
74	72[5RS-2,5B-1;6RS-1]	PEORIA	59	46
		CONTRACT NO. 68391		
FED. ROAD DIST. NO.	ILLINOIS	FED. AID PROJECT		