F.A.P. RTE.	SECTION	COUNTY	TOTAL SHEETS	SHEET NO.
681	(115)RS-1	LIVINGSTON	279	10
STA.		TO STA.		
FED. ROAD DIST. NO.	ILLINOIS	FED. AID PROJECT		

CONTRACT NO. 66375

DESIGN		
INT.	DATE	REASON

PLOTS & CHECKS			
INT.	DATE	NO.	REASON

CHECKS		
INT.	DATE	REASON

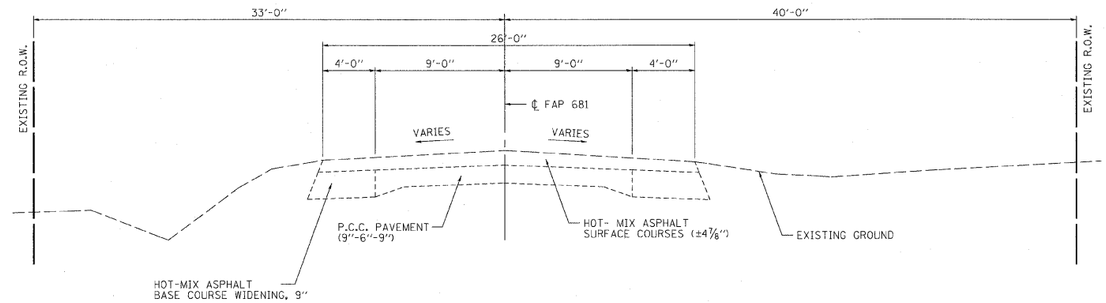

EXISTING TYPICAL SECTION

STA. 155+00 TO STA. 155+75 (TRANSITION)

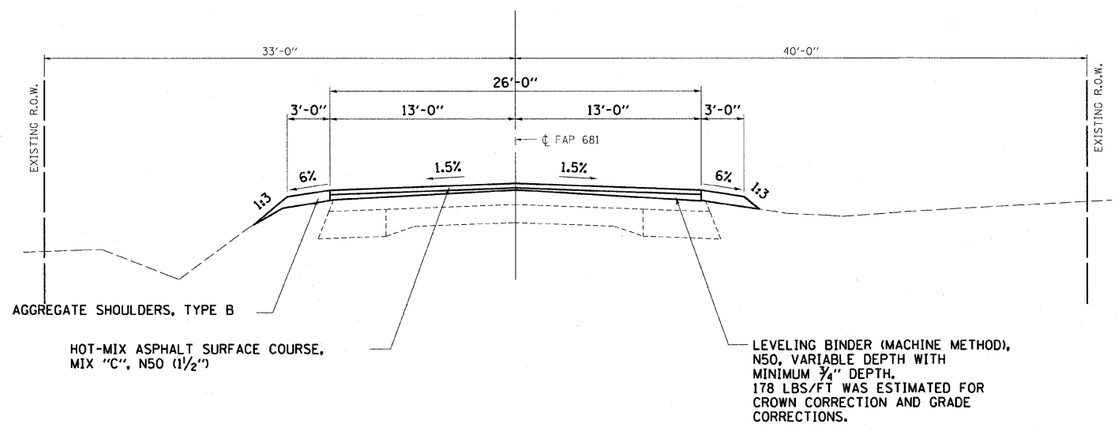

PROPOSED TYPICAL SECTION

STA. 155+00 TO STA. 155+75 (TRANSITION)

MIXTURE DESIGN:

	BINDER FOR PATCHES	LEVEL BINDER	HOT-MIX ASPHALT SURFACE
PG GRADE	PG64-22	PG64-22	PG64-22
MAX % RAP ALLOWABLE••	25%	25%	15%
DESIGN AIR VOIDS	4.0% @ N50	4.0% @ N50	4.0% @ N50
MIXTURE COMPOSITION	IL 19.0	IL 9.5	IL 12.5 OR IL 9.5
FRICTION AGGREGATE			MIXTURE C
PLANT CONTROL LIMIT	CLASS I	CLASS I	CLASS I
DENSITY CONTROL METHOD	CORES	SATISFACTION OF THE ENGINEER	CORES

•• IF RAP OPTION IS SELECTED, THE ASPHALT CEMENT GRADE MAY NEED TO BE ADJUSTED. THIS WILL BE DETERMINED BY THE ENGINEER.

REVISIONS	
NAME	DATE
IDOT REVIEW-WCB	10/08

ILLINOIS DEPARTMENT OF TRANSPORTATION

TYPICAL SECTIONS

FAP 681 (IL RTE. 116)
SECTION (115)RS-1
LIVINGSTON COUNTY
VILLAGE OF CULLOM

SCALE: VERT. HORIZ.
DATE: 11/05/03

DRAWN BY: JAMESON
DESIGNED BY: BOTT
CHECKED BY: COLBROOK

GREENE & BRADFORD, INC. OF SPRINGFIELD
CONSULTING ENGINEERS
1500 CONSTITUTION DRIVE
SPRINGFIELD, ILLINOIS 62707
PROFESSIONAL DESIGN FIRM NO. 184-000170
PROFESSIONAL & STRUCTURAL ENGINEERING CORPORATION
(217) 793-8896, (217) 793-8207 FILE MAIL - sandbox/servers/bradford/gbf.com

COMPUTER FILE NO. TYPICALSP2-1

PROJECT 03145
09/05/07-WCB

IDOTPL-10 1"=10' 8/07/00

TYPICALS - FAP 681 (IL RTE. 116) LIVINGSTON COUNTY