STATE OF ILLINOIS
DEPARTMENT OF TRANSPORTATION

ROUTE NO.	SECTION	COUNTY	TOTAL SHEETS	SHEET NO.
FAI 74	*	ROCK ISLAND	246	167
FED. ROAD DIST. NO. 7		ILLINOIS	FED. AID PROJECT-	

SHEET NO. 10
10 SHEETS

* 81 (1-2, 1, 2-2) RS-1 & M

NOTE:
Seal perimeter of post to parapet with two component non-staining gray sealing compound with polysulfide liquid polymers-gun grade with primer.

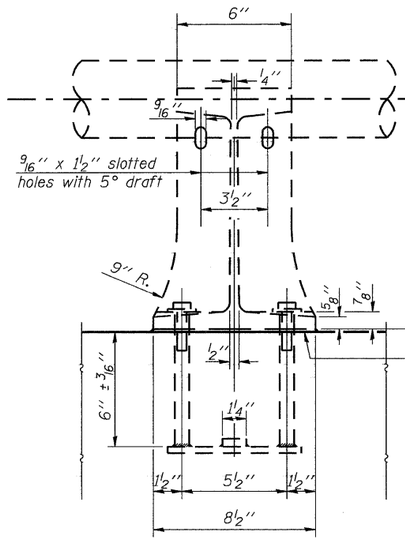

VIEW H-H

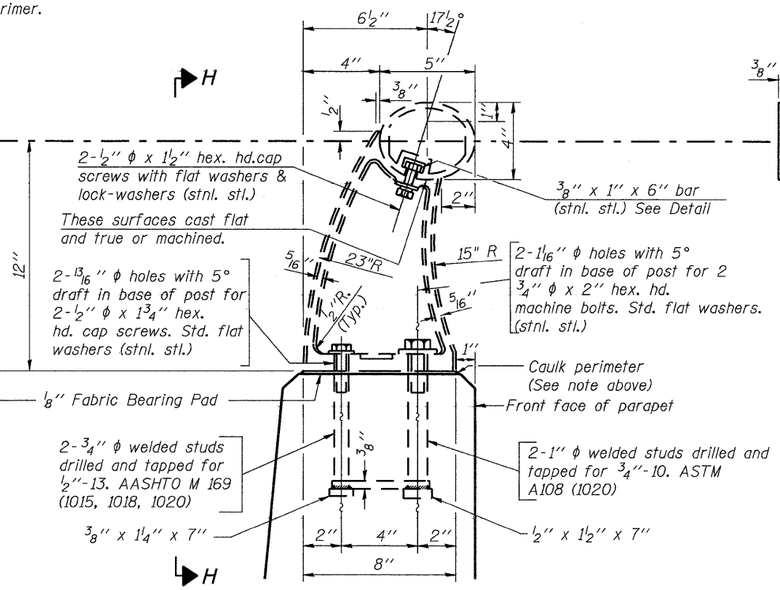

SECTION G-G

RAIL POST DETAILS

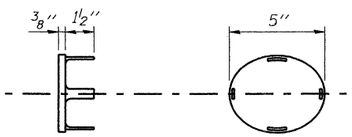

CAST END CAP

DRIVE FIT TYPE

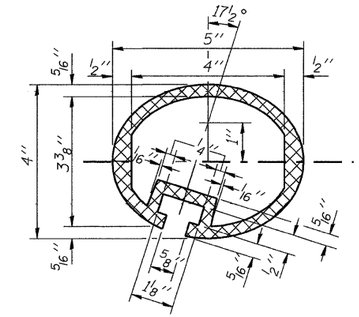

SEC. THRU ELLIPTICAL RAIL SECTION

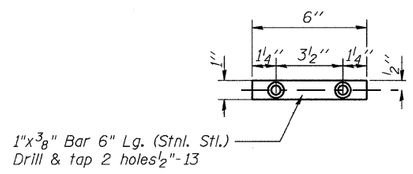

CLAMP BAR

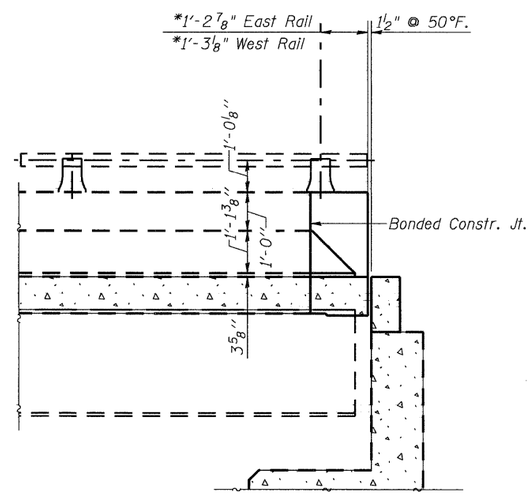

INSIDE VIEW AT PROPOSED ABUTMENTS

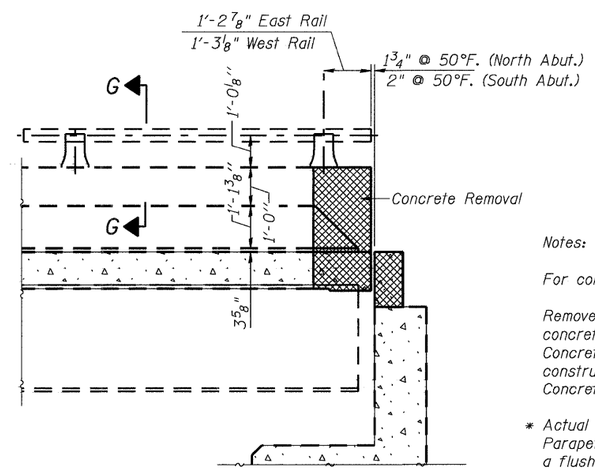

INSIDE VIEW AT EXISTING ABUTMENTS

Notes:

For concrete removal limits See Sheet 4 of 10.

Remove and reuse railing, including posts and anchors, where concrete removal affects existing rail posts. Cost included with Concrete Superstructure. If anchors are damaged during construction, they shall be replaced and are included with Concrete Removal.

* Actual distance varies. New Joints are skewed through Parapet. Length of rail shall be adjusted as necessary with a flush cut and the cast end cap shall be reused.

DESIGNED	DFM
CHECKED	DSG
DRAWN	EBS
CHECKED	DFM

RAILING DETAILS
F.A.I. 74 (OVER 12TH AVE.)
ROCK ISLAND COUNTY
STRUCTURE NO. 081-0102