STATE OF ILLINOIS
DEPARTMENT OF TRANSPORTATION

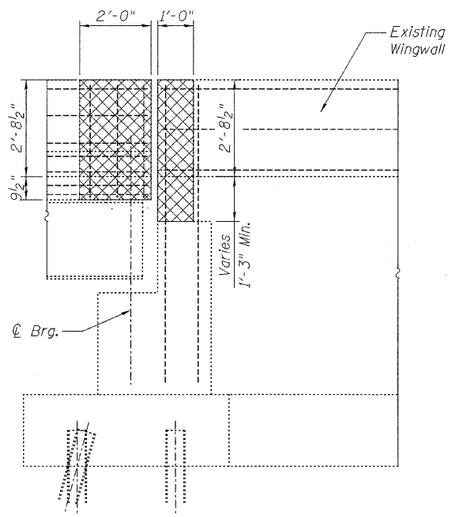

VIEW B-B
EXISTING PARAPET ELEVATION

Southwest Wingwall shown
(Three other locations similar)

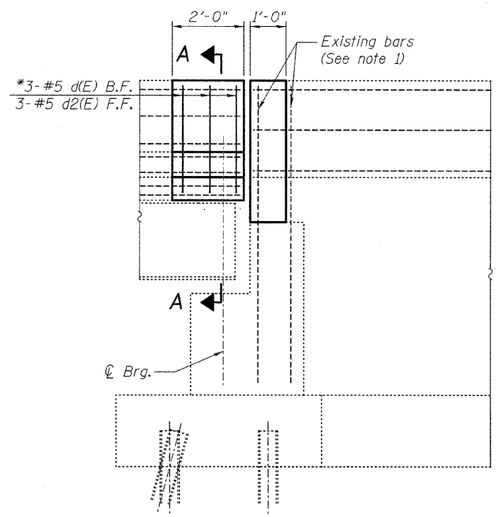

VIEW C-C
PROPOSED PARAPET ELEVATION

Southwest Wingwall shown
(Three other locations similar)

* d1(E) bars to be used in place of d(E) bars at NE and NW corners

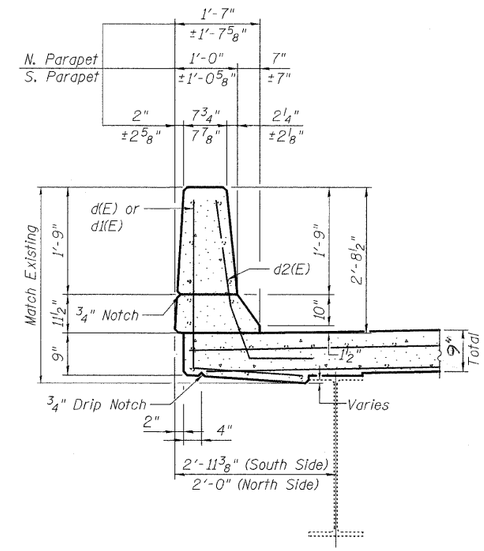

SECTION A-A

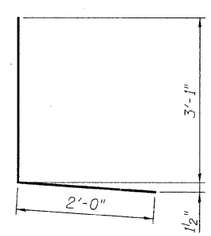

BAR d(E)

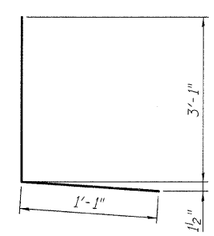

BAR d1(E)

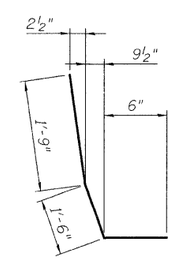

BAR d2(E)

LEGEND:

Concrete Removal

NOTE:

1. Existing vertical reinforcement protruding from the wingwall and horizontal reinforcement protruding from the existing parapet to remain in place. The existing reinforcement shall be sandblasted clean, straightened and incorporated into the new construction.
2. Work this sheet with sheet S4 and S5.
3. Quantities for concrete removal shown on sheet S4.
4. Quantities for concrete superstructure and rebar shown on sheet S5.

PARAPET REMOVAL
AND REPLACEMENT
US 30 OVER SOUTH RIVER STREET
STA. 280+57.0
S.N. 047-0030

DESIGNED	B. Sauter
CHECKED	E. Mroczek
DRAWN	R. Danley
CHECKED	B. Sauter

Ciorba Group, Inc.
CONSULTING ENGINEERS
5507 North Cumberland Avenue, Suite 402 Chicago, Illinois 60656
Tel. 773.775.4009 Fax 773.775.4014 Email chicago@ciorba.com

SHEET NO. S6	F.A.P. RTE.	SECTION	COUNTY	TOTAL SHEETS	SHEET NO.
S9 SHEETS	349	11 HB-I	KENDALL	26	18
			CONTRACT NO. 60D83		
	FED. ROAD DIST. NO.	ILLINOIS	FED. AID PROJECT		

n:\proj\3329\3329_28\design\structural\cad\sht\3329_28_06 Parapet Removal.sht
1/13/2009
rdanley