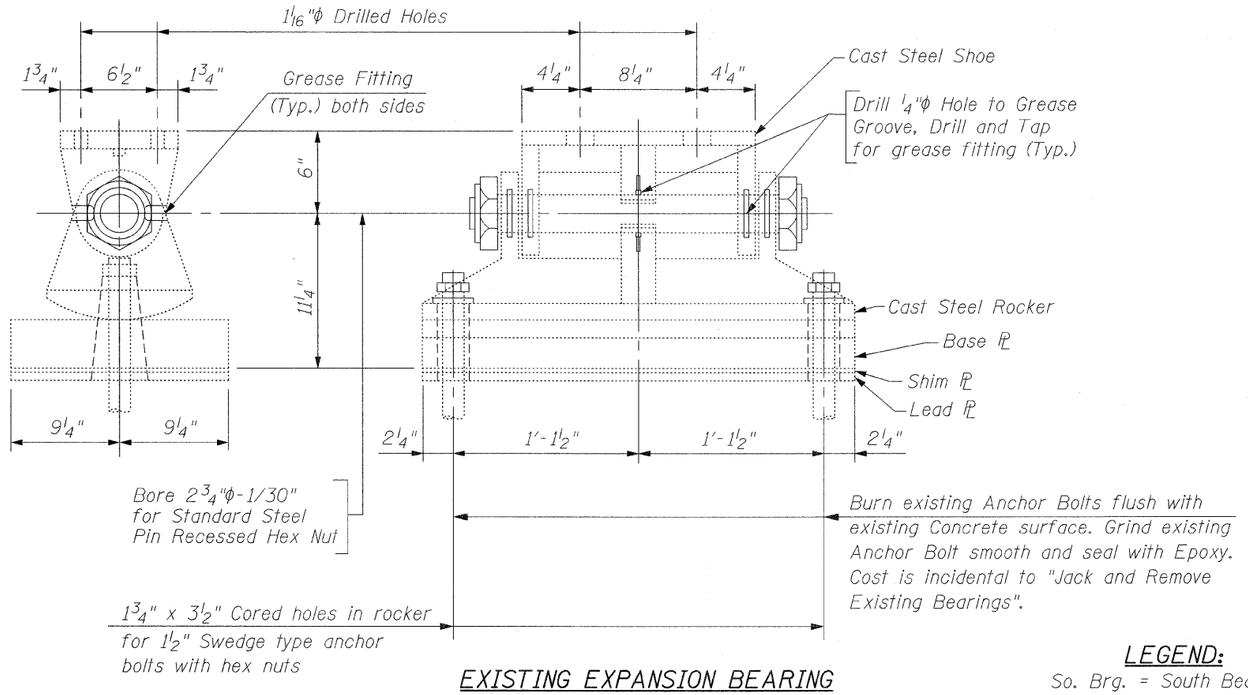

EXISTING EXPANSION BEARING

At Pier No. 9 (No. Brg.) & Pier No. 12 (So. Brg.)

BEARING REPLACEMENT NOTES:

1. The Contractor shall submit for approval by the Engineer plans for jacking Existing Superstructure prior to commencing any work at the Bearings. This submittal shall be prepared and sealed by a Licensed Structural Engineer in Illinois.
2. Jacking and Removing Existing Bearings shall be done after the existing Deck Overlay removal is completed and before the New Deck Overlay is poured.
3. Remove Nuts from Anchor Bolts of Bearings at the Beams.
4. Remove the Existing Bearings:
   at Pier No. 9 (8 No. Brg.)
   at Pier No. 12 (8 So. Brg.)
5. Install Type II Elastomeric Expansion Bearings on the existing Pedestals with fabricated Steel Extensions:
   at Pier No. 9 (No. Brg.)
6. Install Type III Elastomeric Expansion Bearings on the existing Pedestals with fabricated Steel Extensions:
   at Pier No. 12 (So. Brg)
7. The New Bearings shall be in place and the Jacks shall be lowered before the New Deck Overlay is poured.

LEGEND:

So. Brg. = South Bearing
No. Brg. = North Bearing

NOTE:

Existing Expansion Bearings are to be removed:
at Pier No. 9 (No. Brg.)
at Pier No. 12 (So. Brg.)

BILL OF MATERIAL

Item	Unit	Total
Jack and Remove Existing Bearings	Each	16

EXISTING EXPANSION BEARINGS REMOVAL AND REPLACEMENT

at Pier No. 9 (8 No. Brg.)
at Pier No. 12 (8 So. Brg.)

See Sht. S31 For Type II Elastomeric Exp. Brg.
See Sht. S33 For Type III Elastomeric Exp. Brg.

CHRISTIAN-ROGE & ASSOCIATES, INC.
ENGINEERS / PLANNERS / SURVEYORS
211 W. WACKER DRIVE CHICAGO, IL. 60606
PHONE: (312)372-2023 FAX: (312)372-5274