ROUTE NO.	SECTION	COUNTY	TOTAL SHEETS	SHEET NO.
FAU 1584	*	COOK	119	91
FED. ROAD DIST. NO. 7		ILLINOIS	FED. AID PROJECT-	

SHEET NO. S18
S23 SHEETS

* 068-1919.2-CF CONTRACT 60371

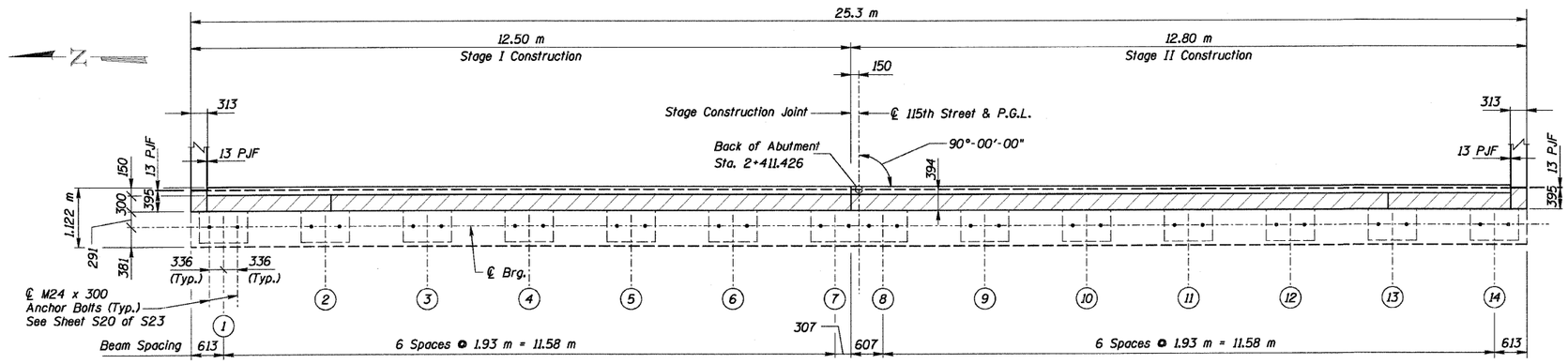

Notes:

Hatched area to be poured after superstructure falsework has been removed. Quantity of Concrete included with Concrete Superstructure, on sheet S19 of S23.

All dimensions are in millimeters (mm) except as noted.

See Sheet S19 of S23 for Sections A-A and Bill of Material.

Bars indicated thus 5x2-#15 etc. indicates 5 lines of bars with 2 lengths per line.

** Epoxy grout bars 230 (Min.) drilled holes according to Article 584 of the Standard Specifications. Space drilled holes in existing cap to miss existing reinforcement.

Minimum Bar Laps:

#15 Bars = 640
#20 Bars = 790

Legend:

F.F. = Front Face
B.F. = Back Face
E.F. = Each Face

PLAN

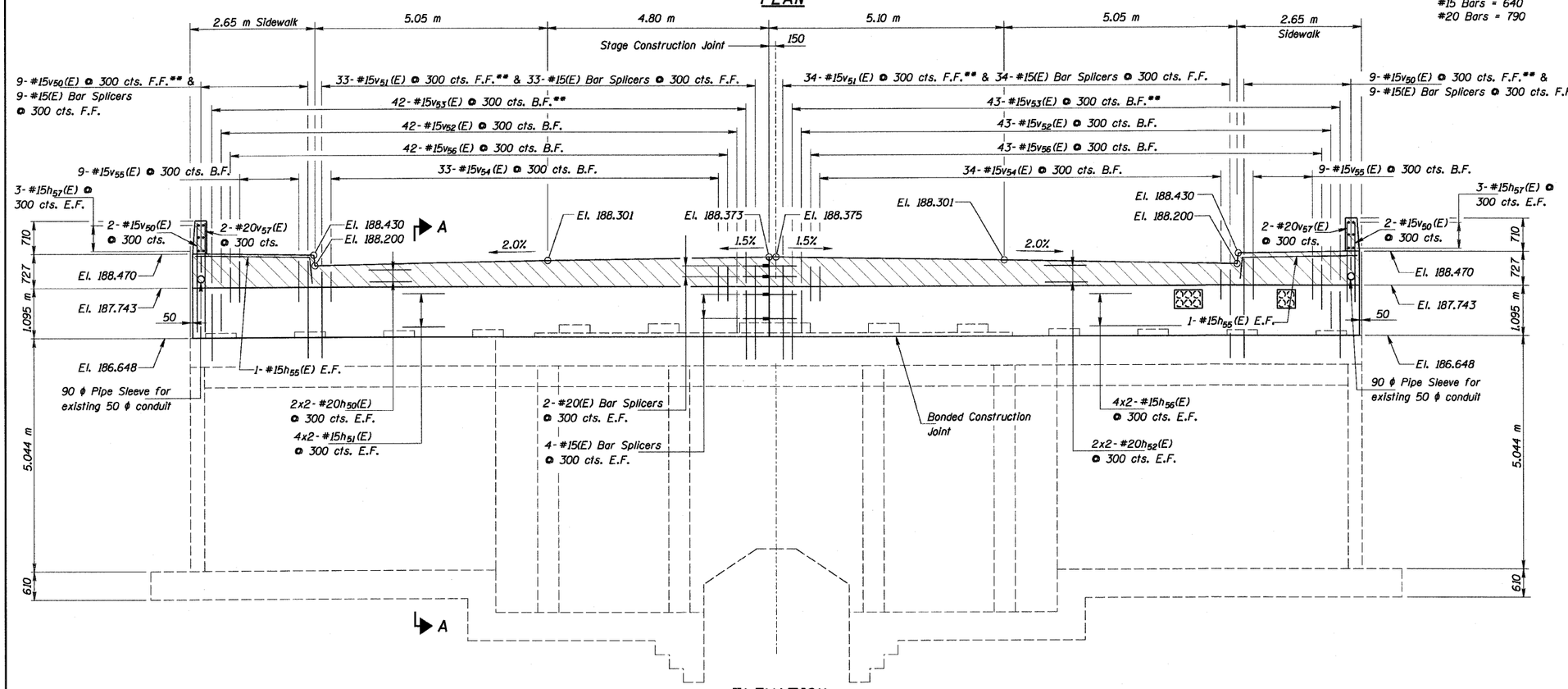

ELEVATION

REVISIONS	
NAME	DATE

COLLINS ENGINEERS INC
123 North Wacker Drive
Suite 300
Chicago, IL 60606
(312) 704-9300
www.collinsengr.com
ILLINOIS PROFESSIONAL DESIGN FIRM LICENSE NO. 184-000593

ILLINOIS DEPARTMENT OF TRANSPORTATION
115 TH. STREET OVER FAI 57
FAU RTE. 1584 SEC. 068-1919.2-CF
COOK COUNTY
STATION 2+382.915
STRUCTURE NO. 016-2037

EAST ABUTMENT DETAILS-I

DRAWN BY KAC
CHECKED BY MDK/DGS DATE: JANUARY 16, 2009

29040015