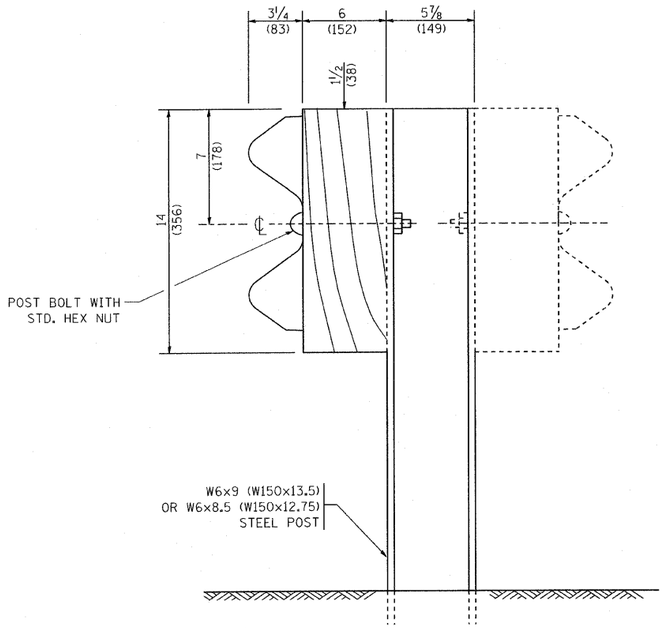

STEEL POST CONSTRUCTION

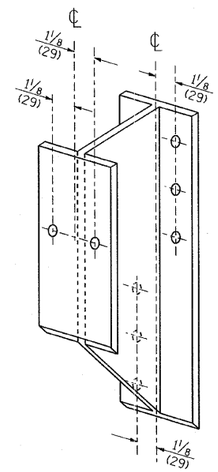

STEEL BLOCK-OUT DETAIL

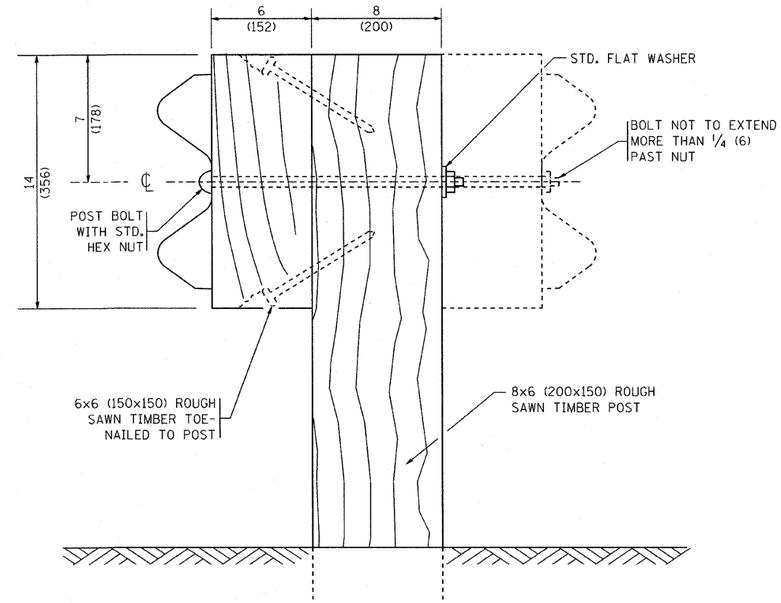

WOOD POST CONSTRUCTION

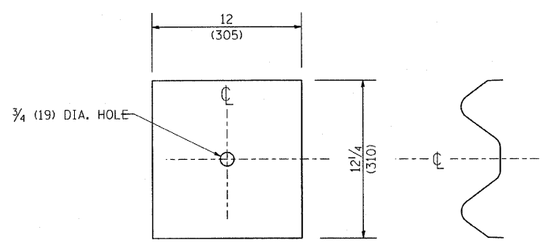

NOTE:

PLATE A SHALL BE PLACED BETWEEN RAIL ELEMENT AND BLOCK-OUT AT NON-SPLICE MOUNTING POINTS ONLY WHEN STEEL BLOCK-OUTS ARE USED.

PLATE A

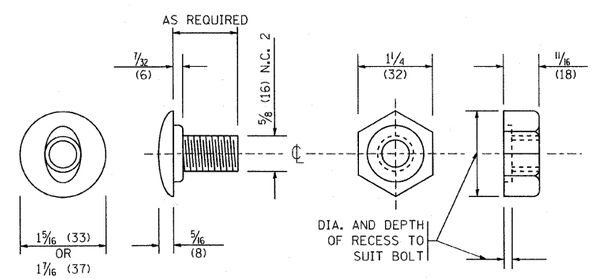

POST OR SPLICE BOLT & NUT

FILE NAME = W:\diststd\22x34\bm21.dgn	USER NAME = gaglianobt	DESIGNED -	REVISED - 10-31-06	STATE OF ILLINOIS DEPARTMENT OF TRANSPORTATION	REMOVE AND REERECT STEEL PLATE BEAM GUARDRAIL	F.A.P. RTE.	SECTION	COUNTY	TOTAL SHEETS	SHEET NO.
		DRAWN -	REVISED -			332	0312-708W-I	Cook	9	9b
	PLOT SCALE = 50.0000 ' / IN.	CHECKED -	REVISED -			BM-21		CONTRACT NO. 60N81		
	PLOT DATE = 1/4/2008	DATE -	REVISED -		SCALE: NONE / SHEET NO. 2 OF 4 SHEETS / STA. / TO STA.	FED. ROAD DIST. NO. 1	ILLINOIS	FED. AID PROJECT		