IL 40 AT MILLER ROAD NW CORNER				
POINT	STATION	OFFSET	SIDE	ELEVATION
A	805+19.39	57.04	LT	672.92
B	805+24.28	39.71	LT	672.98
C	805+25.03	38.41	LT	672.99
D	805+27.51	34.74	LT	673.04
E	805+28.81	33.12	LT	673.06
F	805+35.68	26.72	LT	673.18
G	805+37.21	25.65	LT	673.21
H	805+41.02	23.42	LT	673.24
I	805+42.20	22.83	LT	673.24
J	805+59.27	19.00	LT	673.19
K	805+42.20	25.71	LT	673.21
L	805+37.21	28.80	LT	673.15
M	805+30.78	34.79	LT	673.03
N	805+27.24	39.74	LT	672.96
O	805+30.58	40.06	LT	673.01
P	805+26.93	47.37	LT	673.33
Q	805+31.63	49.06	LT	673.38
R	805+34.75	42.81	LT	673.07
S	805+44.89	33.35	LT	673.25
T	805+50.51	30.92	LT	673.32
U	805+46.60	27.01	LT	673.27
V	805+42.20	28.55	LT	673.22
W	805+37.21	32.61	LT	673.15
X	805+34.78	34.85	LT	673.09

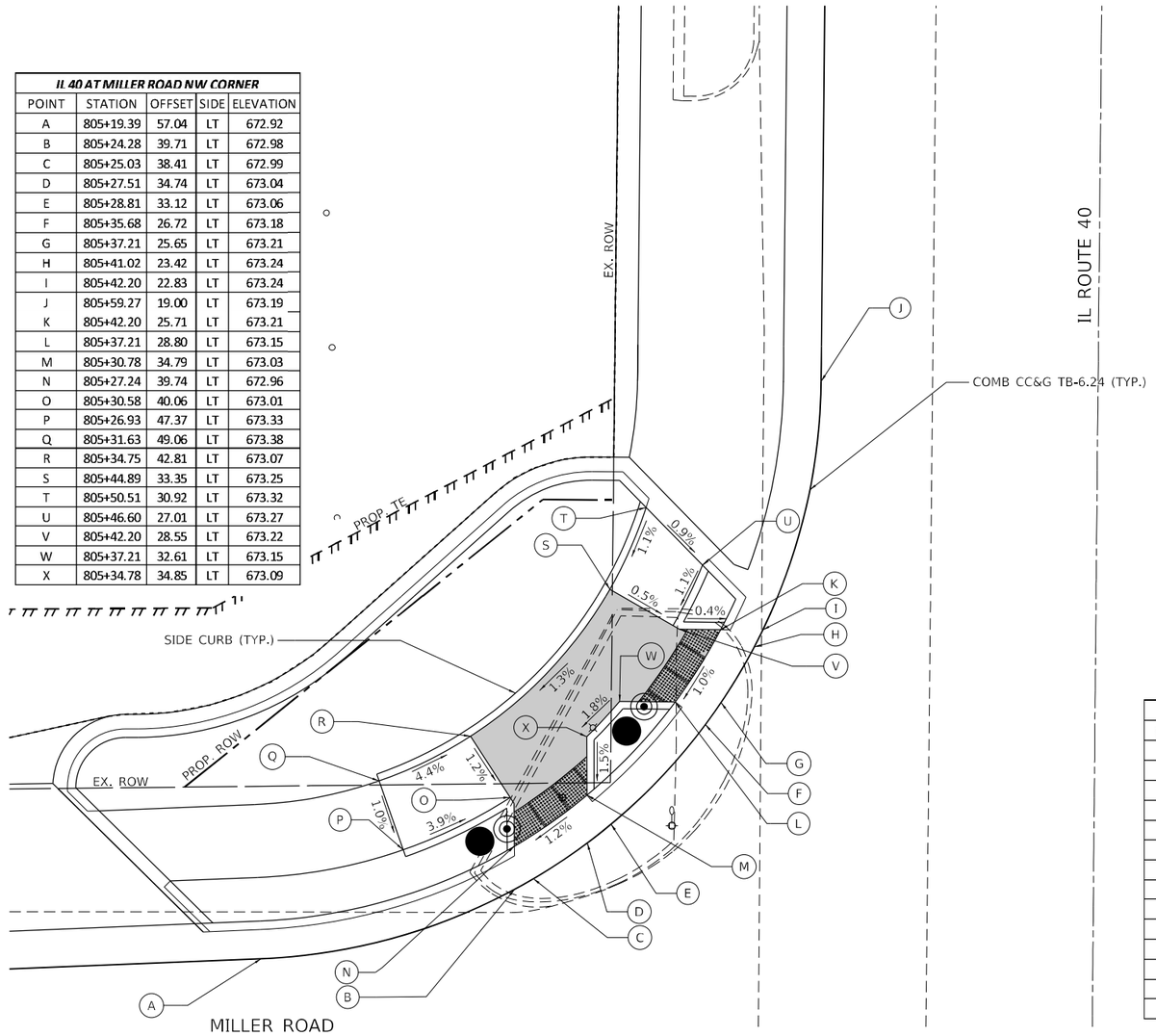

IL 40 AT MILLER ROAD NE CORNER				
POINT	STATION	OFFSET	SIDE	ELEVATION
A	805+62.24	25.67	RT	672.65
B	805+43.42	35.26	RT	672.65
C	805+40.95	37.40	RT	672.67
D	805+33.37	46.30	RT	672.75
E	805+35.52	47.74	RT	672.72
F	805+45.05	37.26	RT	672.62
G	805+47.05	37.19	RT	672.65
H	805+55.03	36.50	RT	673.00
I	805+56.72	46.39	RT	673.10
J	805+47.63	49.85	RT	672.84
K	805+43.52	53.06	RT	672.86
L	805+39.26	58.50	RT	673.16
M	805+34.25	56.33	RT	673.11
N	805+38.02	49.41	RT	672.76

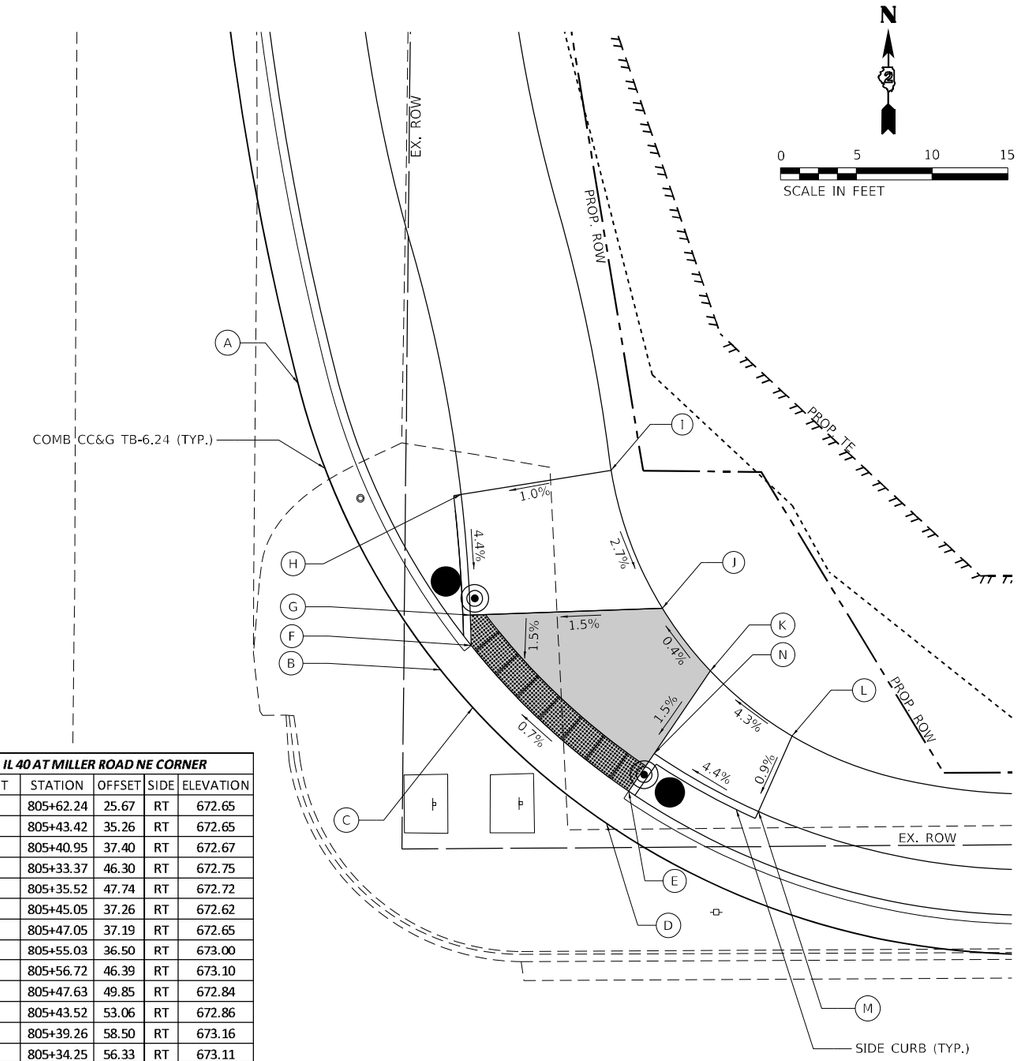

NOTES

1. AT DEPRESSED CURBS ADJACENT TO CURB RAMPS ACCESSIBLE TO THE DISABLED, THE GUTTER FLAG SLOPE SHALL BE -3.5% UNLESS NOTED OTHERWISE.

LEGEND

- EXISTING ELEVATION
- PROPOSED ELEVATION
- X.X% SIDEWALK / PAVEMENT GRADE
- ( ) EXISTING ELEVATION / SLOPE
- PROPOSED CONSTRUCTION LIMITS
- PROPOSED LANDING
- DETECTABLE WARNINGS
- PEDESTRIAN PUSH-BUTTON

MODEL: Default
FILE NAME: pw:\\ildot-pw.bentley.com:PWIDOT\Documents\IDOT Offices\District 2\Projects\64D78\Program Development\Studies & Plans\Design\Consultants\Data\IMEG\16-4-20211102_64D78-ADA_DETAIL_Miller1.dgn

HERMANN & ASSOCIATES, LLC
CONSULTING ENGINEERS

USER NAME = hogensonjd	DESIGNED -	REVISED -
	DRAWN -	REVISED -
PLOT SCALE = 10.0000 ' / in.	CHECKED -	REVISED -
PLOT DATE = 10/22/2021	DATE -	REVISED -

STATE OF ILLINOIS
DEPARTMENT OF TRANSPORTATION

ADA RAMP DETAILS
IL 40 AT MILLER ROAD – NORTH

SCALE: 1"=5' | SHEET OF SHEETS | STA. TO STA.

F.A.P. RTE.	SECTION	COUNTY	TOTAL SHEETS	SHEET NO.
646	9R & 9RS-3	WHITESIDE	222	101
		CONTRACT NO. 64D78		
	ILLINOIS	FED. AID PROJECT		

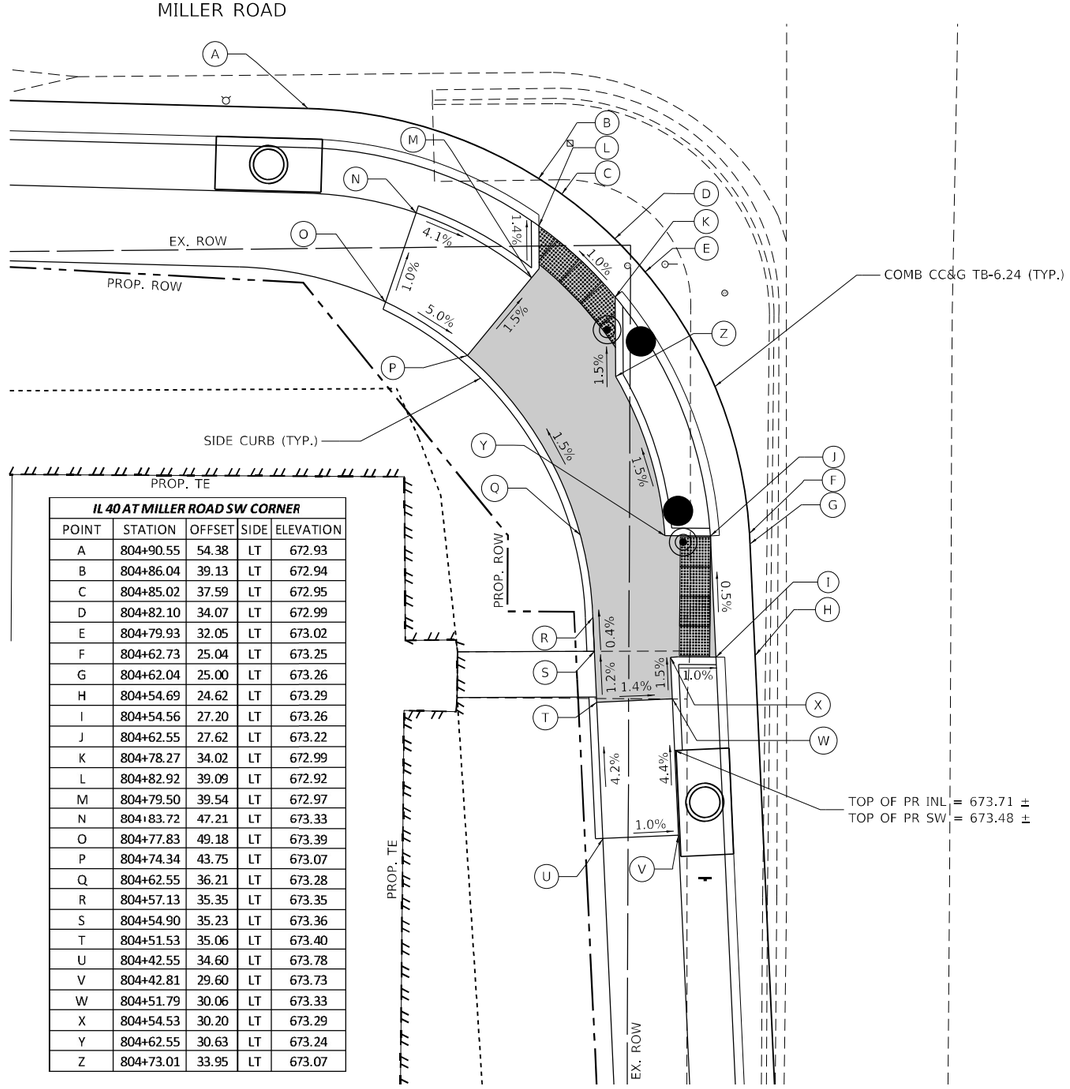

IL 40 AT MILLER ROAD SW CORNER				
POINT	STATION	OFFSET	SIDE	ELEVATION
A	804+90.55	54.38	LT	672.93
B	804+86.04	39.13	LT	672.94
C	804+85.02	37.59	LT	672.95
D	804+82.10	34.07	LT	672.99
E	804+79.93	32.05	LT	673.02
F	804+62.73	25.04	LT	673.25
G	804+62.04	25.00	LT	673.26
H	804+54.69	24.62	LT	673.29
I	804+54.56	27.20	LT	673.26
J	804+62.55	27.62	LT	673.22
K	804+78.27	34.02	LT	672.99
L	804+82.92	39.09	LT	672.92
M	804+79.50	39.54	LT	672.97
N	804+83.72	47.21	LT	673.33
O	804+77.83	49.18	LT	673.39
P	804+74.34	43.75	LT	673.07
Q	804+62.55	36.21	LT	673.28
R	804+57.13	35.35	LT	673.35
S	804+54.90	35.23	LT	673.36
T	804+51.53	35.06	LT	673.40
U	804+42.55	34.60	LT	673.78
V	804+42.81	29.60	LT	673.73
W	804+51.79	30.06	LT	673.33
X	804+54.53	30.20	LT	673.29
Y	804+62.55	30.63	LT	673.24
Z	804+73.01	33.95	LT	673.07

IL 40 AT MILLER ROAD SE CORNER				
POINT	STATION	OFFSET	SIDE	ELEVATION
A	804+33.77	31.00	RT	673.48
B	804+53.80	35.69	RT	673.23
C	804+57.91	38.00	RT	673.13
D	804+67.98	46.69	RT	672.89
E	804+76.16	60.65	RT	672.61
F	804+66.02	48.37	RT	672.86
G	804+52.65	38.00	RT	673.20
H	804+50.65	38.00	RT	673.21
I	804+34.63	38.00	RT	673.89
J	804+34.63	48.00	RT	673.99
K	804+50.64	50.28	RT	673.22
L	804+58.37	54.93	RT	673.05
M	804+62.87	59.56	RT	673.17
N	804+68.14	56.58	RT	673.11
O	804+63.74	50.33	RT	672.92

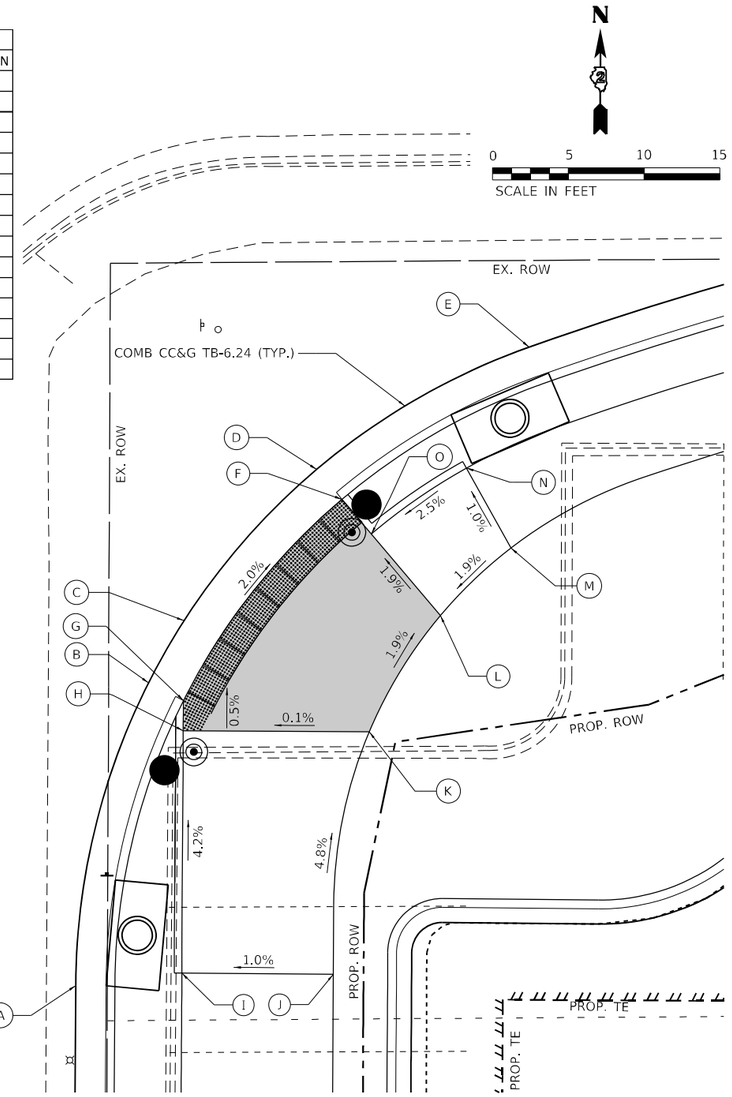

NOTES

1. AT DEPRESSED CURBS ADJACENT TO CURB RAMPS ACCESSIBLE TO THE DISABLED, THE GUTTER FLAG SLOPE SHALL BE -3.5% UNLESS NOTED OTHERWISE.

LEGEND

- EXISTING ELEVATION
- PROPOSED ELEVATION
- x.x% SIDEWALK / PAVEMENT GRADE
- ( ) EXISTING ELEVATION / SLOPE
- PROPOSED CONSTRUCTION LIMITS
- PROPOSED LANDING
- DETECTABLE WARNINGS
- PEDESTRIAN PUSH-BUTTON

HERMANN & ASSOCIATES, LLC CONSULTING ENGINEERS

USER NAME = hogensonjd	DESIGNED -	REVISED -
	DRAWN -	REVISED -
PLOT SCALE = 10.0000 ' / in.	CHECKED -	REVISED -
PLOT DATE = 10/22/2021	DATE -	REVISED -

STATE OF ILLINOIS
DEPARTMENT OF TRANSPORTATION

ADA RAMP DETAILS
IL 40 AT MILLER ROAD – SOUTH

SCALE: 1"=5' | SHEET OF SHEETS | STA. TO STA.

F.A.P. RTE.	SECTION	COUNTY	TOTAL SHEETS	SHEET NO.
646	9R & 9RS-3	WHITESIDE	222	102

CONTRACT NO. 64D78

ILLINOIS FED. AID PROJECT

MODEL: Default
FILE NAME: pw:\\ildot-pw.bentley.com:PWIDOT\Documents\IDOT Offices\District 2\Projects\64D78\Program Development\Studies & Plans\Design\ConsultantData\IMEG\10-14-2021\D2_64D78-ADA DETAIL_Miller2.dgn

MILLER ROAD AT DRIVEWAY (STA. 1003+00)				
POINT	STATION	OFFSET	SIDE	ELEVATION
A	1002+73.79	18.00	RT	670.83
B	1002+91.56	28.81	RT	671.21
C	1002+92.12	30.00	RT	671.23
D	1002+93.49	34.56	RT	671.30
E	1002+93.57	35.00	RT	671.30
F	1002+93.79	38.00	RT	671.38
G	1002+90.95	35.00	RT	671.27
H	1002+89.26	30.00	RT	671.18
I	1002+89.26	35.00	RT	671.27
J	1002+82.72	35.00	RT	671.30
K	1002+81.63	32.78	RT	671.30
L	1002+85.79	30.00	RT	671.23
M	1002+77.21	23.99	RT	671.31
N	1002+76.02	28.85	RT	671.36

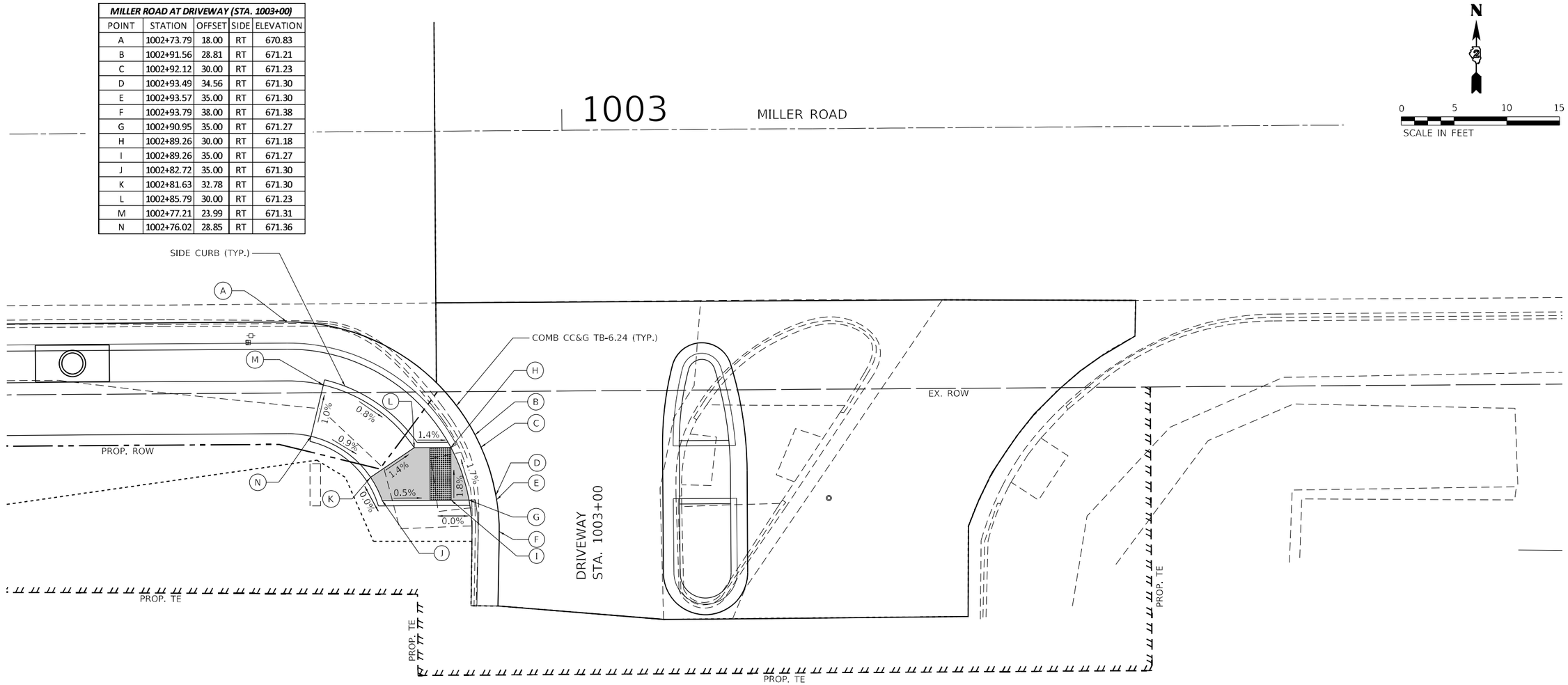

NOTES

1. AT DEPRESSED CURBS ADJACENT TO CURB RAMPS ACCESSIBLE TO THE DISABLED, THE GUTTER FLAG SLOPE SHALL BE -3.5% UNLESS NOTED OTHERWISE.

LEGEND

- X — EXISTING ELEVATION
- X — PROPOSED ELEVATION
- X.X% — SIDEWALK / PAVEMENT GRADE
- ( ) — EXISTING ELEVATION / SLOPE
- PROPOSED CONSTRUCTION LIMITS
- PROPOSED LANDING
- DETECTABLE WARNINGS
- PEDESTRIAN PUSH-BUTTON

MODEL: Default
FILE NAME: pw:\\ildot-pw.bentley.com:PWIDOT\Documents\IDOT Offices\District 2\Projects\64D78\Program Development\Studies & Plans\Design\Consultant\Data\MEG\16-14-202103_64D78-ADA DETAIL_Miller3Driveway.dgn

HERMANN & ASSOCIATES, LLC
CONSULTING ENGINEERS

USER NAME = hogensonjd	DESIGNED -	REVISED -
	DRAWN -	REVISED -
PLOT SCALE = 10.0000 ' / in.	CHECKED -	REVISED -
PLOT DATE = 10/22/2021	DATE -	REVISED -

STATE OF ILLINOIS
DEPARTMENT OF TRANSPORTATION

ADA RAMP DETAILS
MILLER ROAD AT DRIVEWAY STA. 1003+00

SCALE: 1"=5' | SHEET OF SHEETS | STA. TO STA.

F.A.P. RTE.	SECTION	COUNTY	TOTAL SHEETS	SHEET NO.
646	9R & 9RS-3	WHITESIDE	222	103
		CONTRACT NO. 64D78		
	ILLINOIS	FED. AID PROJECT		

IL 40 AT REINS STREET SE CORNER				
POINT	STATION	OFFSET	SIDE	ELEVATION
A	816+80.31	19.00	RT	661.18
B	817+03.48	29.94	RT	661.44
C	817+04.72	31.56	RT	661.46
D	817+06.64	34.63	RT	661.49
E	817+08.47	41.54	RT	661.55
F	816+93.81	56.81	RT	661.94
G	817+05.89	41.58	RT	661.52
H	817+01.48	31.58	RT	661.41
I	816+91.48	31.58	RT	661.52
J	816+91.48	41.58	RT	661.62
K	817+01.48	41.58	RT	661.55

IL 40 AT REINS STREET NE CORNER				
POINT	STATION	OFFSET	SIDE	ELEVATION
A	817+66.33	19.00	RT	661.13
B	817+43.16	29.94	RT	661.65
C	817+41.88	31.62	RT	661.63
D	817+37.45	40.89	RT	661.55
E	817+37.27	41.61	RT	661.54
F	817+52.23	59.94	RT	662.10
G	817+39.94	41.58	RT	661.52
H	817+45.16	31.58	RT	661.62
I	817+55.16	31.58	RT	661.46
J	817+55.16	41.58	RT	661.56
K	817+45.16	41.58	RT	661.55

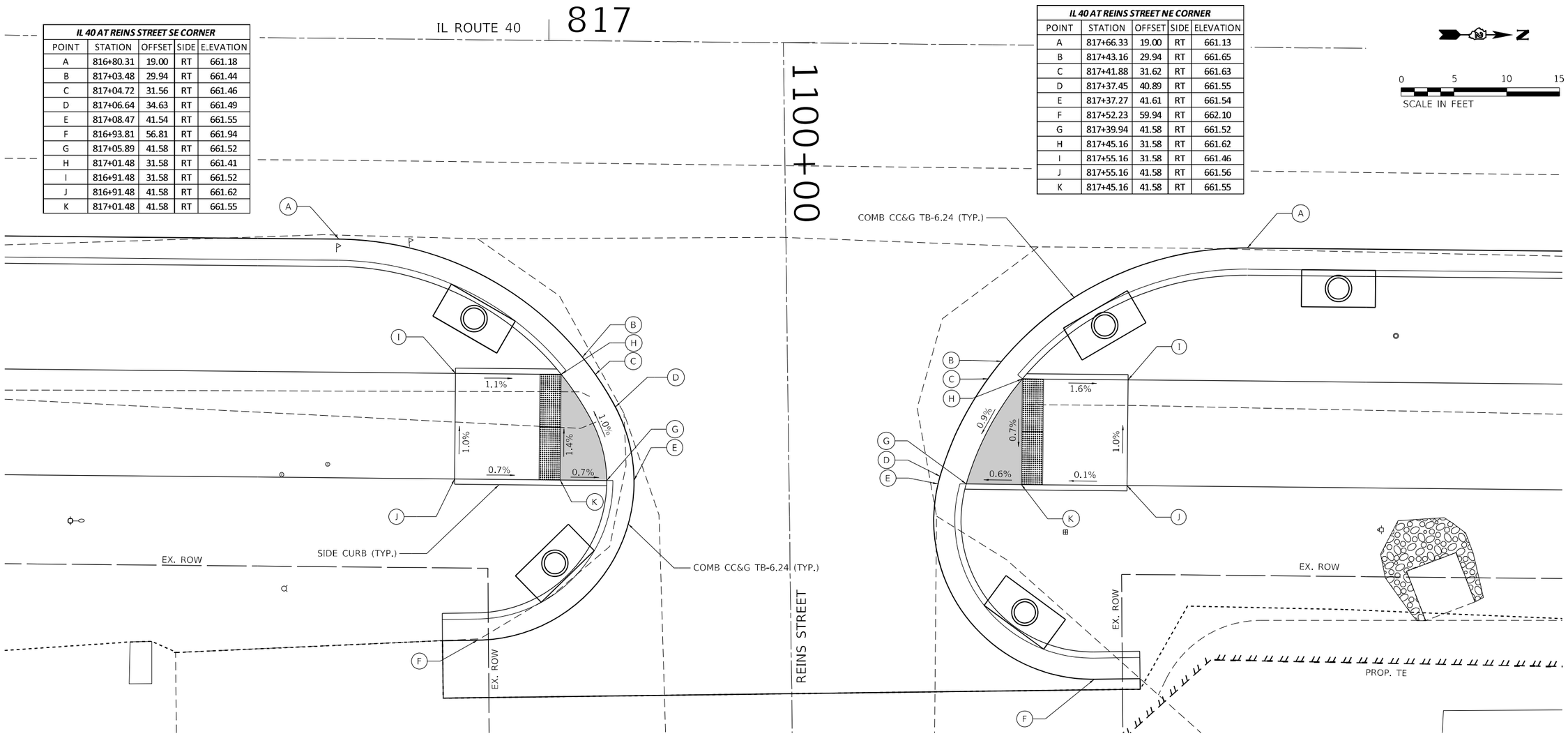

NOTES

1. AT DEPRESSED CURBS ADJACENT TO CURB RAMPS ACCESSIBLE TO THE DISABLED, THE GUTTER FLAG SLOPE SHALL BE -3.5% UNLESS NOTED OTHERWISE.

LEGEND

- (X) EXISTING ELEVATION
- (X) PROPOSED ELEVATION
- X.X% SIDEWALK / PAVEMENT GRADE
- ( ) EXISTING ELEVATION / SLOPE
- PROPOSED CONSTRUCTION LIMITS
- PROPOSED LANDING
- DETECTABLE WARNINGS
- PEDESTRIAN PUSH-BUTTON

HERMANN & ASSOCIATES, LLC
CONSULTING ENGINEERS

USER NAME = hogensonjd	DESIGNED -	REVISED -
	DRAWN -	REVISED -
PLOT SCALE = 10.0000 ' / in.	CHECKED -	REVISED -
PLOT DATE = 10/22/2021	DATE -	REVISED -

STATE OF ILLINOIS
DEPARTMENT OF TRANSPORTATION

ADA RAMP DETAILS
IL 40 AT REINS STREET

SCALE: 1"=5' | SHEET OF SHEETS | STA. TO STA.

F.A.P. RTE.	SECTION	COUNTY	TOTAL SHEETS	SHEET NO.
646	9R & 9RS-3	WHITESIDE	222	104

CONTRACT NO. 64D78

ILLINOIS | FED. AID PROJECT

MODEL: Default
FILE NAME: pw:\\ildot-pw.bentley.com:PWIDOT\Documents\IDOT Offices\District 2\Projects\64D78\Program Development\Studies & Plans\Design\Consultant Data\IMEG\IC-14-2021102_64D78-ADA_DETAIL_Reins1.dgn

IL 40 AT 23RD STREET NW CORNER				
POINT	STATION	OFFSET	SIDE	ELEVATION
A	824+37.18	19.00	LT	662.32
B	824+05.10	35.12	LT	662.02
C	824+04.00	36.66	LT	661.99
D	824+01.74	40.46	LT	661.91
E	824+01.14	41.66	LT	661.89
F	823+99.10	46.76	LT	661.80
G	824+04.03	41.66	LT	661.88
H	824+07.17	36.66	LT	661.99
I	824+07.17	41.66	LT	661.92
J	824+13.69	41.66	LT	662.02
K	824+15.95	41.66	LT	662.05
L	824+17.32	40.10	LT	662.07
M	824+31.99	32.08	LT	662.83
N	824+31.05	27.17	LT	662.78
O	824+13.69	36.66	LT	662.02

IL 40 AT 23RD STREET NE CORNER				
POINT	STATION	OFFSET	SIDE	ELEVATION
A	824+33.49	25.67	RT	661.88
B	824+30.86	26.55	RT	661.86
C	824+25.49	29.03	RT	661.82
D	824+15.04	37.40	RT	661.71
E	824+13.57	39.15	RT	661.69
F	824+05.05	67.29	RT	661.93
G	824+16.97	39.11	RT	661.68
H	824+31.77	28.97	RT	661.83
I	824+33.77	28.95	RT	661.85
J	824+43.76	28.84	RT	662.36
K	824+44.02	38.84	RT	662.46
L	824+33.86	38.95	RT	661.89

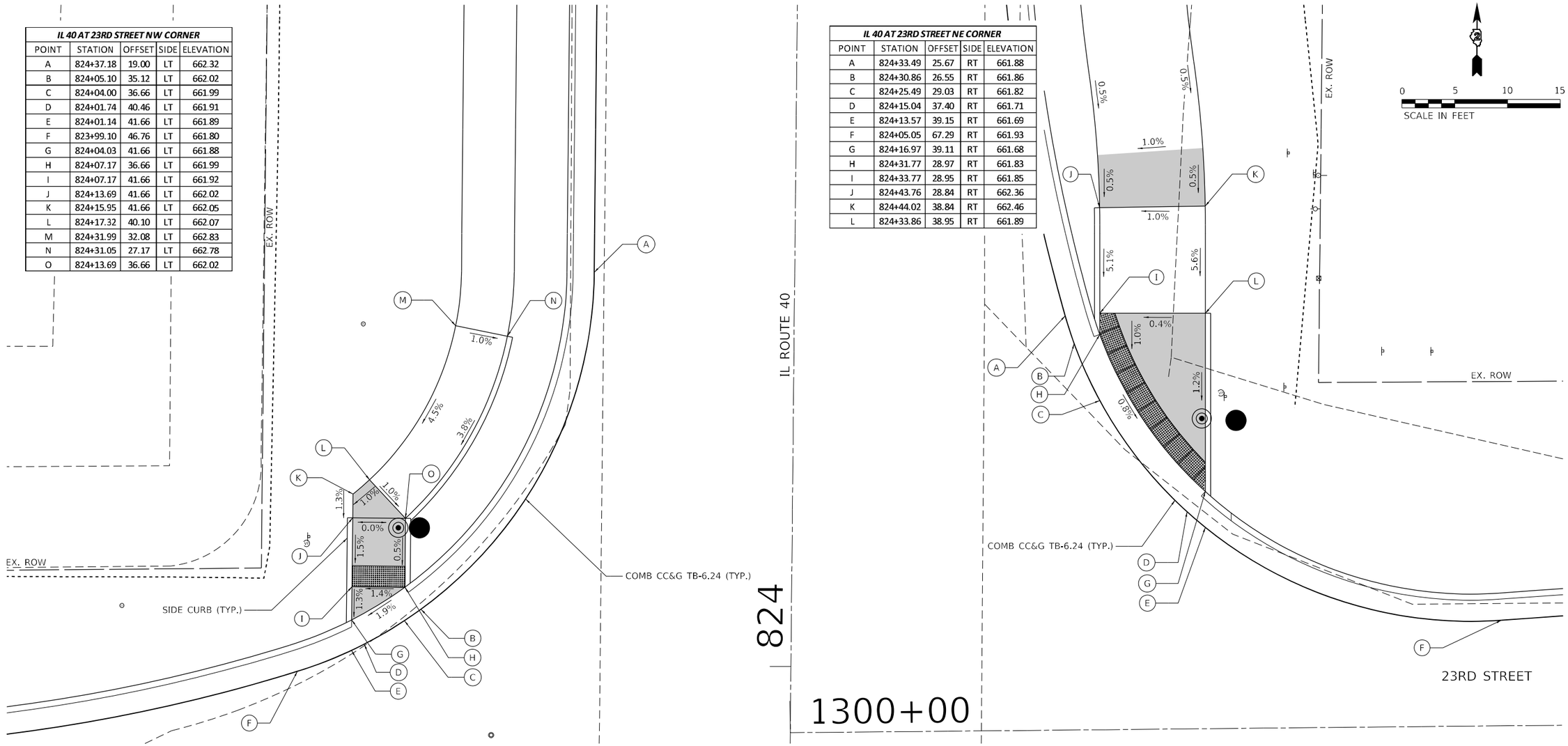

NOTES

1. AT DEPRESSED CURBS ADJACENT TO CURB RAMPS ACCESSIBLE TO THE DISABLED, THE GUTTER FLAG SLOPE SHALL BE -3.5% UNLESS NOTED OTHERWISE.

LEGEND

- EXISTING ELEVATION
- PROPOSED ELEVATION
- X.X% SIDEWALK / PAVEMENT GRADE
- ( ) EXISTING ELEVATION / SLOPE
- PROPOSED CONSTRUCTION LIMITS
- PROPOSED LANDING
- DETECTABLE WARNINGS
- PEDESTRIAN PUSH-BUTTON

HERMANN & ASSOCIATES, LLC CONSULTING ENGINEERS

USER NAME = hogensonjd	DESIGNED -	REVISED -
	DRAWN -	REVISED -
PLOT SCALE = 10.0000 ' / in.	CHECKED -	REVISED -
PLOT DATE = 10/22/2021	DATE -	REVISED -

STATE OF ILLINOIS
DEPARTMENT OF TRANSPORTATION

ADA RAMP DETAILS
IL 40 AT 23RD STREET – NORTH

SCALE: 1"=5' | SHEET OF SHEETS | STA. TO STA.

F.A.P. RTE.	SECTION	COUNTY	TOTAL SHEETS	SHEET NO.
646	9R & 9RS-3	WHITESIDE	222	105
		CONTRACT NO. 64D78		
		ILLINOIS	FED. AID PROJECT	

MODEL: Default
FILE NAME: pw:\\ildot-pw.bentley.com:PWIDOT\Documents\IDOT Offices\District 2\Projects\64D78\Program Development\Studies & Plans\Design\Consultants\Data\IMEG\16-4-2021\D2_64D78-ADA_DETAIL_23rd1.dgn

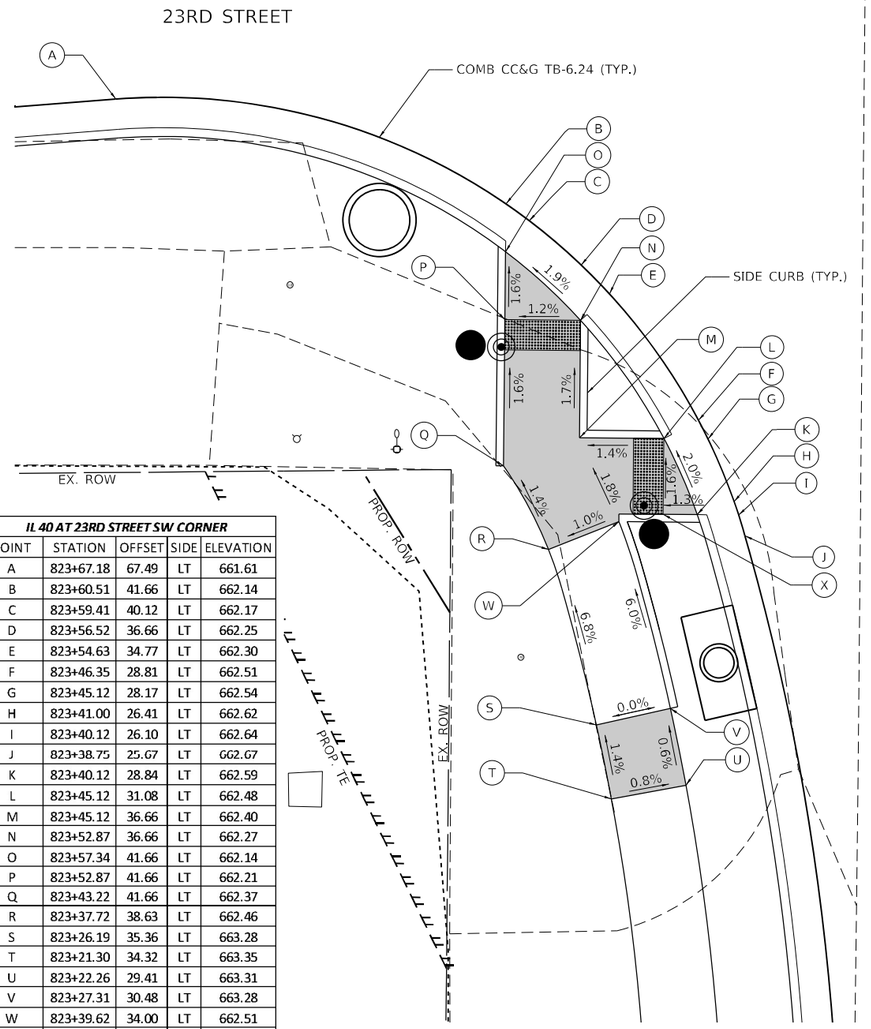

IL 40 AT 23RD STREET SW CORNER				
POINT	STATION	OFFSET	SIDE	ELEVATION
A	823+67.18	67.49	LT	661.61
B	823+60.51	41.66	LT	662.14
C	823+59.41	40.12	LT	662.17
D	823+56.52	36.66	LT	662.25
E	823+54.63	34.77	LT	662.30
F	823+46.35	28.81	LT	662.51
G	823+45.12	28.17	LT	662.54
H	823+41.00	26.41	LT	662.62
I	823+40.12	26.10	LT	662.64
J	823+38.75	25.67	LT	662.67
K	823+40.12	28.84	LT	662.59
L	823+45.12	31.08	LT	662.48
M	823+45.12	36.66	LT	662.40
N	823+52.87	36.66	LT	662.27
O	823+57.34	41.66	LT	662.14
P	823+52.87	41.66	LT	662.21
Q	823+43.22	41.66	LT	662.37
R	823+37.72	38.63	LT	662.46
S	823+26.19	35.36	LT	663.28
T	823+21.30	34.32	LT	663.35
U	823+22.26	29.41	LT	663.31
V	823+27.31	30.48	LT	663.28
W	823+39.62	34.00	LT	662.51
X	823+40.12	31.08	LT	662.56

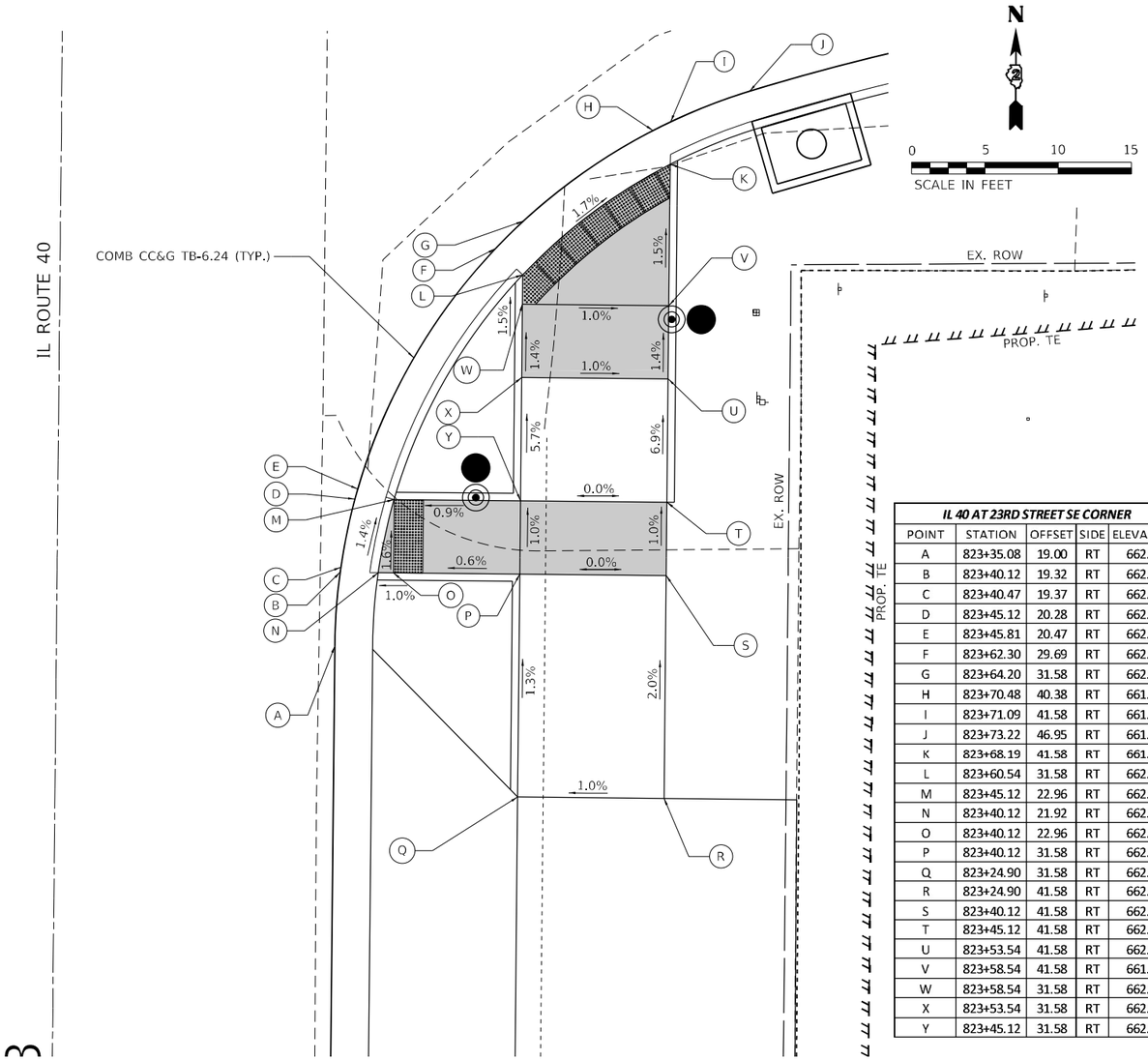

IL 40 AT 23RD STREET SE CORNER				
POINT	STATION	OFFSET	SIDE	ELEVATION
A	823+35.08	19.00	RT	662.66
B	823+40.12	19.32	RT	662.61
C	823+40.47	19.37	RT	662.61
D	823+45.12	20.28	RT	662.55
E	823+45.81	20.47	RT	662.54
F	823+62.30	29.69	RT	662.04
G	823+64.20	31.58	RT	662.00
H	823+70.48	40.38	RT	661.83
I	823+71.09	41.58	RT	661.82
J	823+73.22	46.95	RT	661.76
K	823+68.19	41.58	RT	661.80
L	823+60.54	31.58	RT	662.01
M	823+45.12	22.96	RT	662.51
N	823+40.12	21.92	RT	662.58
O	823+40.12	22.96	RT	662.59
P	823+40.12	31.58	RT	662.64
Q	823+24.90	31.58	RT	662.84
R	823+24.90	41.58	RT	662.94
S	823+40.12	41.58	RT	662.64
T	823+45.12	41.58	RT	662.59
U	823+53.54	41.58	RT	662.01
V	823+58.54	41.58	RT	661.94
W	823+58.54	31.58	RT	662.04
X	823+53.54	31.58	RT	662.11
Y	823+45.12	31.58	RT	662.59

NOTES

1. AT DEPRESSED CURBS ADJACENT TO CURB RAMPS ACCESSIBLE TO THE DISABLED, THE GUTTER FLAG SLOPE SHALL BE -3.5% UNLESS NOTED OTHERWISE.

LEGEND

- EXISTING ELEVATION
- PROPOSED ELEVATION
- X.X% SIDEWALK / PAVEMENT GRADE
- ( ) EXISTING ELEVATION / SLOPE
- PROPOSED CONSTRUCTION LIMITS
- PROPOSED LANDING
- DETECTABLE WARNINGS
- PEDESTRIAN PUSH-BUTTON

HERMANN & ASSOCIATES, LLC CONSULTING ENGINEERS

USER NAME = hogensonjd	DESIGNED -	REVISED -
	DRAWN -	REVISED -
PLOT SCALE = 10.0000 ' / in.	CHECKED -	REVISED -
PLOT DATE = 10/22/2021	DATE -	REVISED -

STATE OF ILLINOIS
DEPARTMENT OF TRANSPORTATION

ADA RAMP DETAILS
IL 40 AT 23RD STREET – SOUTH

SCALE: 1"=5' | SHEET OF SHEETS | STA. TO STA.

F.A.P. RTE.	SECTION	COUNTY	TOTAL SHEETS	SHEET NO.
646	9R & 9RS-3	WHITESIDE	222	106

CONTRACT NO. 64D78

ILLINOIS | FED. AID PROJECT

MODEL: Default
FILE NAME: pw:\\ildot-pw.bentley.com:PWIDOT\Documents\IDOT Offices\District 2\Projects\64D78\Program Development\Studies & Plans\Design\Consultant\Data\IMEG\10-14-2021\D2_64D78-ADA_DETAIL_23-02.cdgn

IL 40 AT LYNN BOULEVARD NE CORNER				
POINT	STATION	OFFSET	SIDE	ELEVATION
A	830+38.74	54.44	RT	663.90
B	830+42.46	50.05	RT	664.03
C	830+44.19	48.20	RT	664.08
D	830+53.37	39.96	RT	664.32
E	830+56.46	37.68	RT	664.39
F	830+91.34	23.34	RT	666.30
G	830+57.94	39.79	RT	664.36
H	830+46.06	49.99	RT	664.05
I	830+70.01	48.39	RT	664.42
J	831+07.37	39.28	RT	667.12
K	831+12.36	39.03	RT	667.19
L	831+12.11	29.04	RT	667.14
M	831+06.62	29.31	RT	667.12
N	830+67.86	38.62	RT	664.42

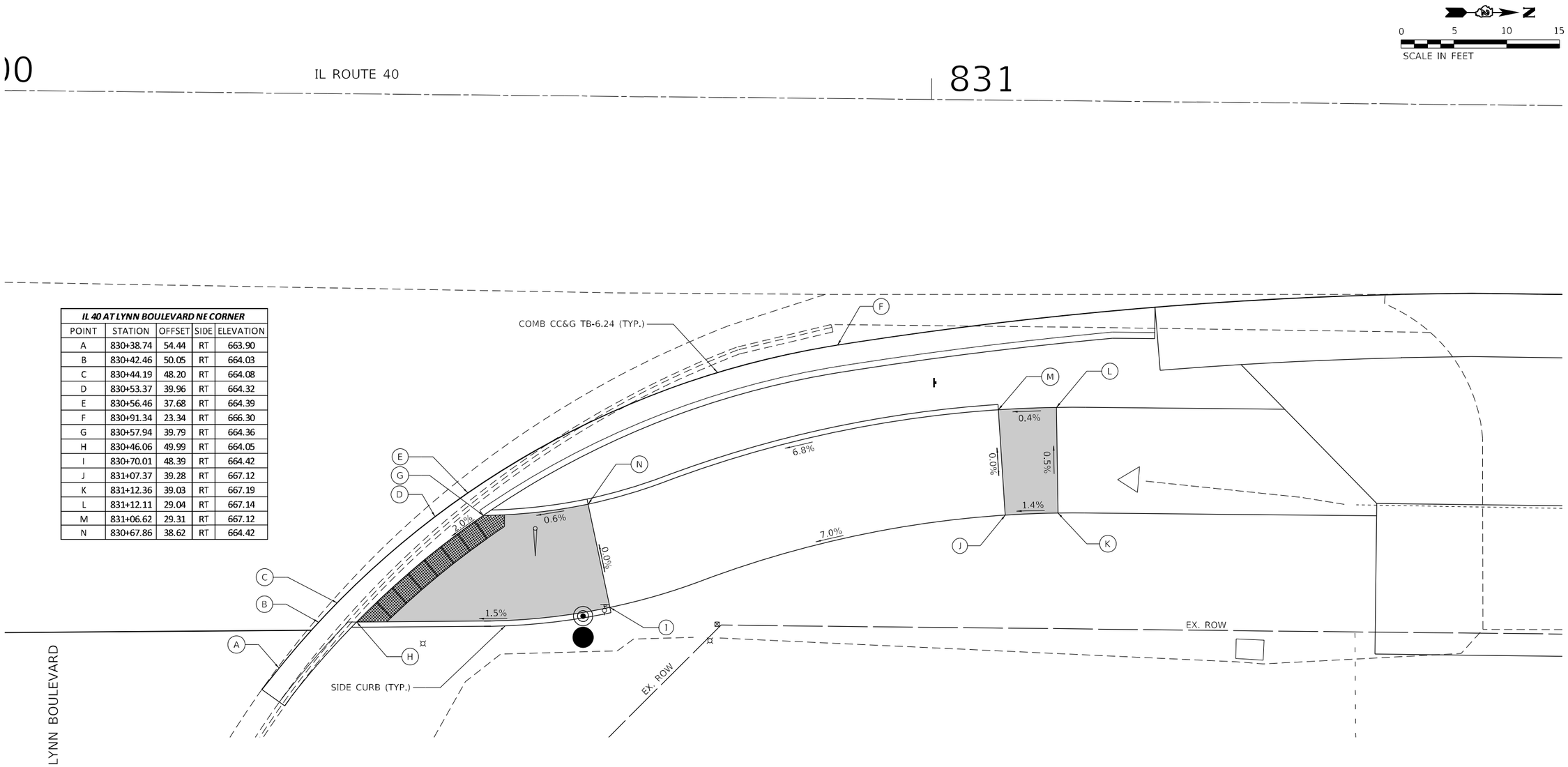

NOTES

1. AT DEPRESSED CURBS ADJACENT TO CURB RAMPS ACCESSIBLE TO THE DISABLED, THE GUTTER FLAG SLOPE SHALL BE -3.5% UNLESS NOTED OTHERWISE.

LEGEND

- (X) EXISTING ELEVATION
- (X) PROPOSED ELEVATION
- X.X% SIDEWALK / PAVEMENT GRADE
- ( ) EXISTING ELEVATION / SLOPE
- PROPOSED CONSTRUCTION LIMITS
- PROPOSED LANDING
- DETECTABLE WARNINGS
- PEDESTRIAN PUSH-BUTTON

HERMANN & ASSOCIATES, LLC CONSULTING ENGINEERS

USER NAME = hogensonjd	DESIGNED -	REVISED -
	DRAWN -	REVISED -
PLOT SCALE = 10.0000 ' / in.	CHECKED -	REVISED -
PLOT DATE = 10/22/2021	DATE -	REVISED -

STATE OF ILLINOIS
DEPARTMENT OF TRANSPORTATION

ADA RAMP DETAILS
IL 40 AT LYNN BOULEVARD – NORTH

SCALE: 1"=5' | SHEET OF SHEETS | STA. TO STA.

F.A.P. RTE.	SECTION	COUNTY	TOTAL SHEETS	SHEET NO.
646	9R & 9RS-3	WHITESIDE	222	107
		CONTRACT NO. 64D78		
	ILLINOIS	FED. AID PROJECT		

MODEL: Default
FILE NAME: pw:\\ildot-pw.bentley.com:PWIDOT\Documents\IDOT Offices\District 2\Projects\64D78\Program Development\Studies & Plans\Design\Consultants\Data\IMEG\IC-14-2021102_64D78-ADA DETAIL_Lynn1.dgn

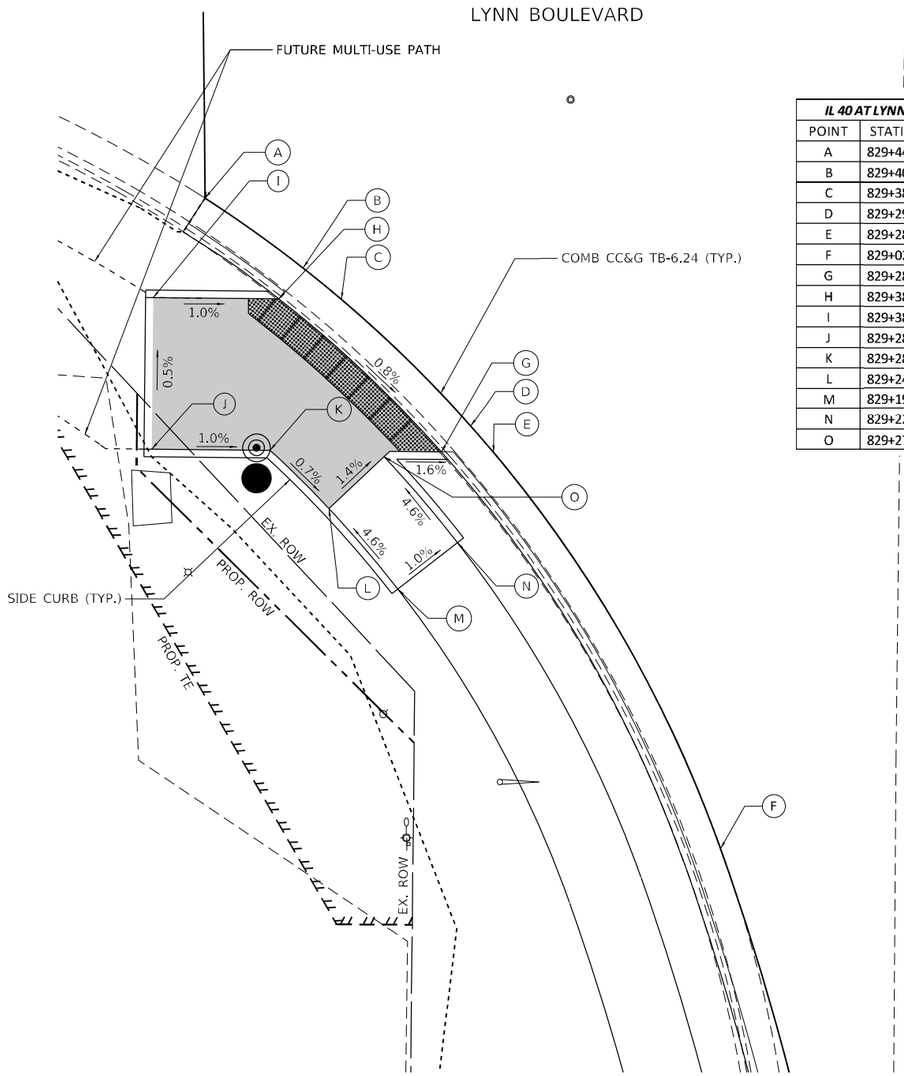

IL 40 AT LYNN BOULEVARD SW CORNER				
POINT	STATION	OFFSET	SIDE	ELEVATION
A	829+44.84	64.16	LT	663.22
B	829+40.29	57.63	LT	663.22
C	829+38.24	55.08	LT	663.20
D	829+29.97	46.47	LT	663.10
E	829+28.24	44.95	LT	663.08
F	829+02.22	29.71	LT	662.78
G	829+28.24	48.39	LT	663.07
H	829+38.24	59.21	LT	663.19
I	829+38.24	67.51	LT	663.27
J	829+28.24	67.51	LT	663.32
K	829+28.24	59.70	LT	663.24
L	829+24.43	55.78	LT	663.20
M	829+19.16	51.18	LT	663.52
N	829+22.26	47.26	LT	663.47
O	829+27.89	52.17	LT	663.13

IL ROUTE 40

829

IL 40 AT LYNN BOULEVARD SE CORNER				
POINT	STATION	OFFSET	SIDE	ELEVATION
A	829+45.98	58.02	RT	663.19
B	829+40.16	50.18	RT	663.09
C	829+38.19	47.91	RT	663.06
D	829+31.89	41.93	RT	662.97
E	829+29.13	39.88	RT	662.93
F	829+00.68	31.00	RT	662.40
G	829+27.66	42.01	RT	662.90
H	829+38.19	51.84	RT	663.06
I	829+38.19	60.03	RT	663.18
J	829+30.01	65.78	RT	663.27
K	829+13.74	51.33	RT	663.02
L	829+04.11	48.77	RT	663.07
M	829+05.17	38.82	RT	662.97
N	829+17.77	42.18	RT	662.94

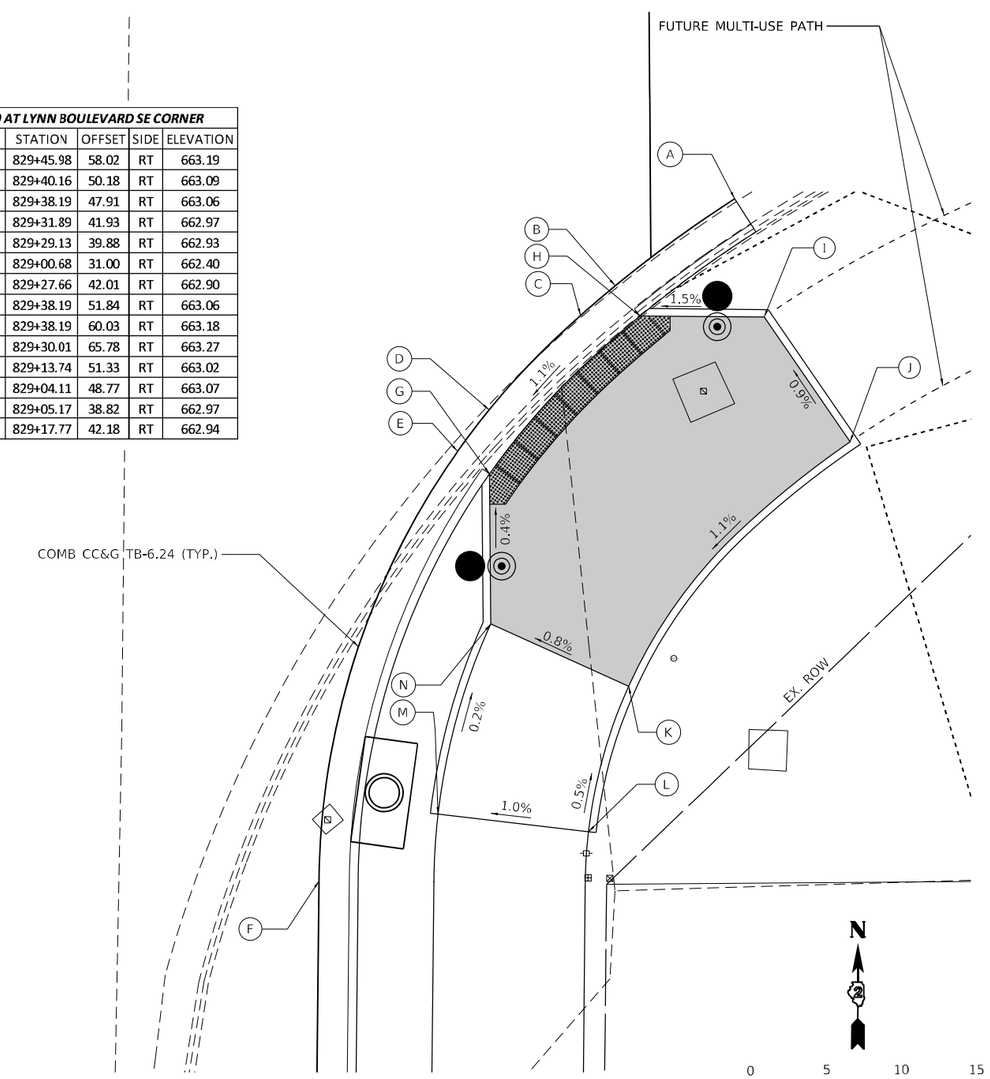

NOTES

1. AT DEPRESSED CURBS ADJACENT TO CURB RAMPS ACCESSIBLE TO THE DISABLED, THE GUTTER FLAG SLOPE SHALL BE -3.5% UNLESS NOTED OTHERWISE.

LEGEND

- X — EXISTING ELEVATION
- X — PROPOSED ELEVATION
- X.X% — SIDEWALK / PAVEMENT GRADE
- ( ) — EXISTING ELEVATION / SLOPE
- PROPOSED CONSTRUCTION LIMITS
- PROPOSED LANDING
- DETECTABLE WARNINGS
- PEDESTRIAN PUSH-BUTTON

MODEL: Default
FILE NAME: pw:\\ildot-pw.bentley.com:PWIDOT\Documents\IDOT Offices\District 2-Projects\64D78\Program Development\Studies & Plans\Design\Consultants\Data\INFO\16-14-202103_64D78-ADA_DETAIL_Lynn2.dgn

HERMANN & ASSOCIATES, LLC
CONSULTING ENGINEERS

USER NAME = hogensonjd	DESIGNED -	REVISED -
	DRAWN -	REVISED -
PLOT SCALE = 10.0000 ' / in.	CHECKED -	REVISED -
PLOT DATE = 10/22/2021	DATE -	REVISED -

STATE OF ILLINOIS
DEPARTMENT OF TRANSPORTATION

ADA RAMP DETAILS
IL 40 AT LYNN BOULEVARD – SOUTH

SCALE: 1"=5' | SHEET OF SHEETS | STA. TO STA.

F.A.P. RTE.	SECTION	COUNTY	TOTAL SHEETS	SHEET NO.
646	9R & 9RS-3	WHITESIDE	222	108
		CONTRACT NO. 64D78		
		ILLINOIS	FED. AID PROJECT	

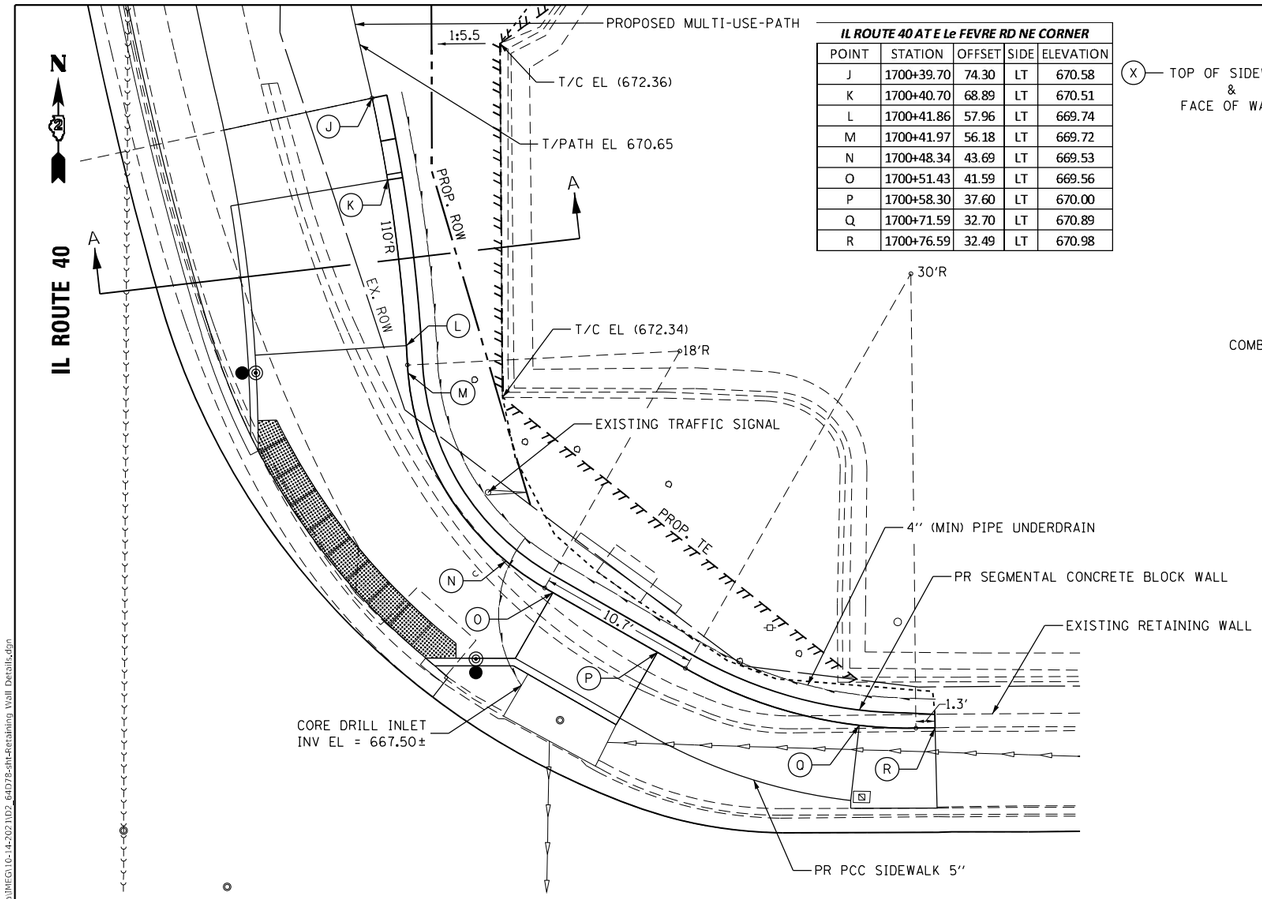

IL ROUTE 40 AT E Le FEVRE RD NE CORNER				
POINT	STATION	OFFSET	SIDE	ELEVATION
J	1700+39.70	74.30	LT	670.58
K	1700+40.70	68.89	LT	670.51
L	1700+41.86	57.96	LT	669.74
M	1700+41.97	56.18	LT	669.72
N	1700+48.34	43.69	LT	669.53
O	1700+51.43	41.59	LT	669.56
P	1700+58.30	37.60	LT	670.00
Q	1700+71.59	32.70	LT	670.89
R	1700+76.59	32.49	LT	670.98

(X) — TOP OF SIDEWALK & FACE OF WALL

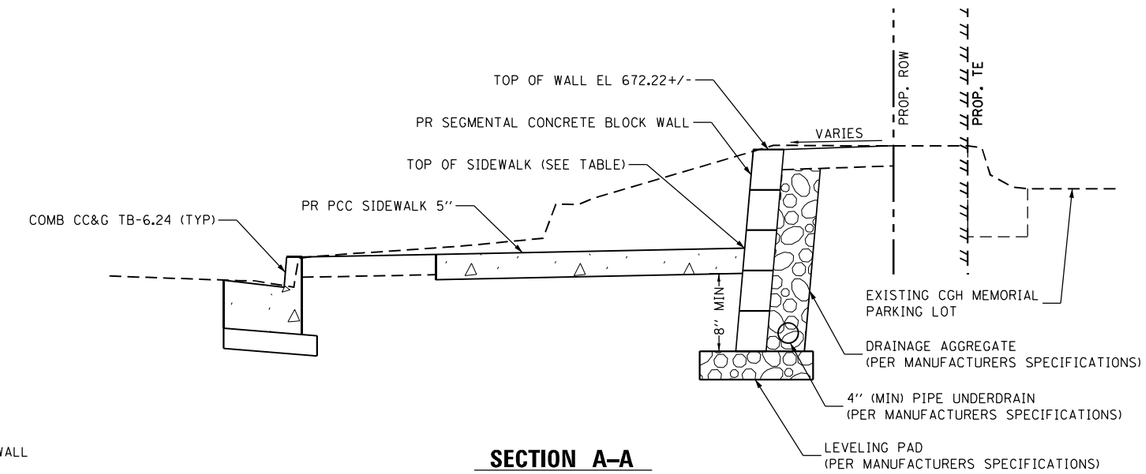

SECTION A–A

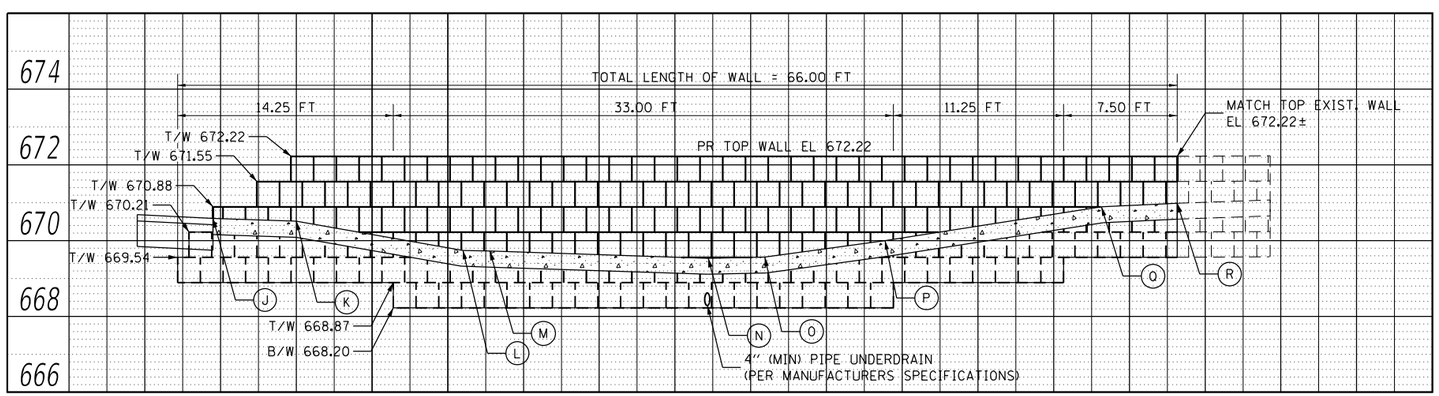

1''=5' HORIZONTAL
1''=2' VERTICAL

NOTES:

1. DIMENSIONS WILL VERY DEPENDING ON THE TYPE OF BLOCK USED.
2. EVERY OTHER BLOCK AT THE END OF THE WALL WILL HAVE TO BE CUT IN HALF TO CONSTRUCT A VERTICAL END. THE COST FOR THIS WORK SHALL BE INCLUDED IN THE PRICE FOR SEGMENTAL CONCRETE BLOCK WALL.
3. SEE SPECIAL PROVISIONS FOR OTHER DETAILS
4. THE SEGMENTAL CONCRETE BLOCK WALL FACE FROM TOP OF BLOCK LINE TO THE THEORETICAL TOP OF LEVELING PAD AREA IS 227.0 SQ. FT. AND IS PROVIDED FOR ESTIMATING PURPOSES ONLY.
5. REMOVAL OF THE EXISTING BLOCK WALL WILL BE INCLUDED IN THE COST OF SEGMENTAL CONCRETE BLOCK WALL.

IMEG
401 E. STATE ST. 4th Floor
ROCKFORD, IL 61104
PH: 815.965.6400
www.imegcorp.com

USER NAME = hogensonjd	DESIGNED - P. PAUSER	REVISED - 9-08-2021	
	DRAWN - P. PAUSER	REVISED -	
PLOT SCALE = 10.0000 ' / in.	CHECKED -	REVISED -	
PLOT DATE = 10/22/2021	DATE - 6-01-2021	REVISED -	

STATE OF ILLINOIS
DEPARTMENT OF TRANSPORTATION

SEGMENTAL CONCRETE BLOCK WALL DETAILS
IL ROUTE 40 AT E Le FEVRE RD

SCALE: 1"=5' | SHEET OF SHEETS | STA. TO STA.

F.A.P. RTE.	SECTION	COUNTY	TOTAL SHEETS	SHEET NO.
646	9R & 9RS-3	WHITESIDE	222	109
		CONTRACT NO. 64D78		
		ILLINOIS	FED. AID PROJECT	

MODEL: Default
FILE NAME: pw:\\ildot-pw.bentley.com:PWIDOT\Documents\IDOT Offices\District 2\Projects\64D78\Program Development\Studies & Plans\Design\Consultant\Data\IMEG\IC-14-2021103_64D78-sht-Retaining Wall Details.dgn

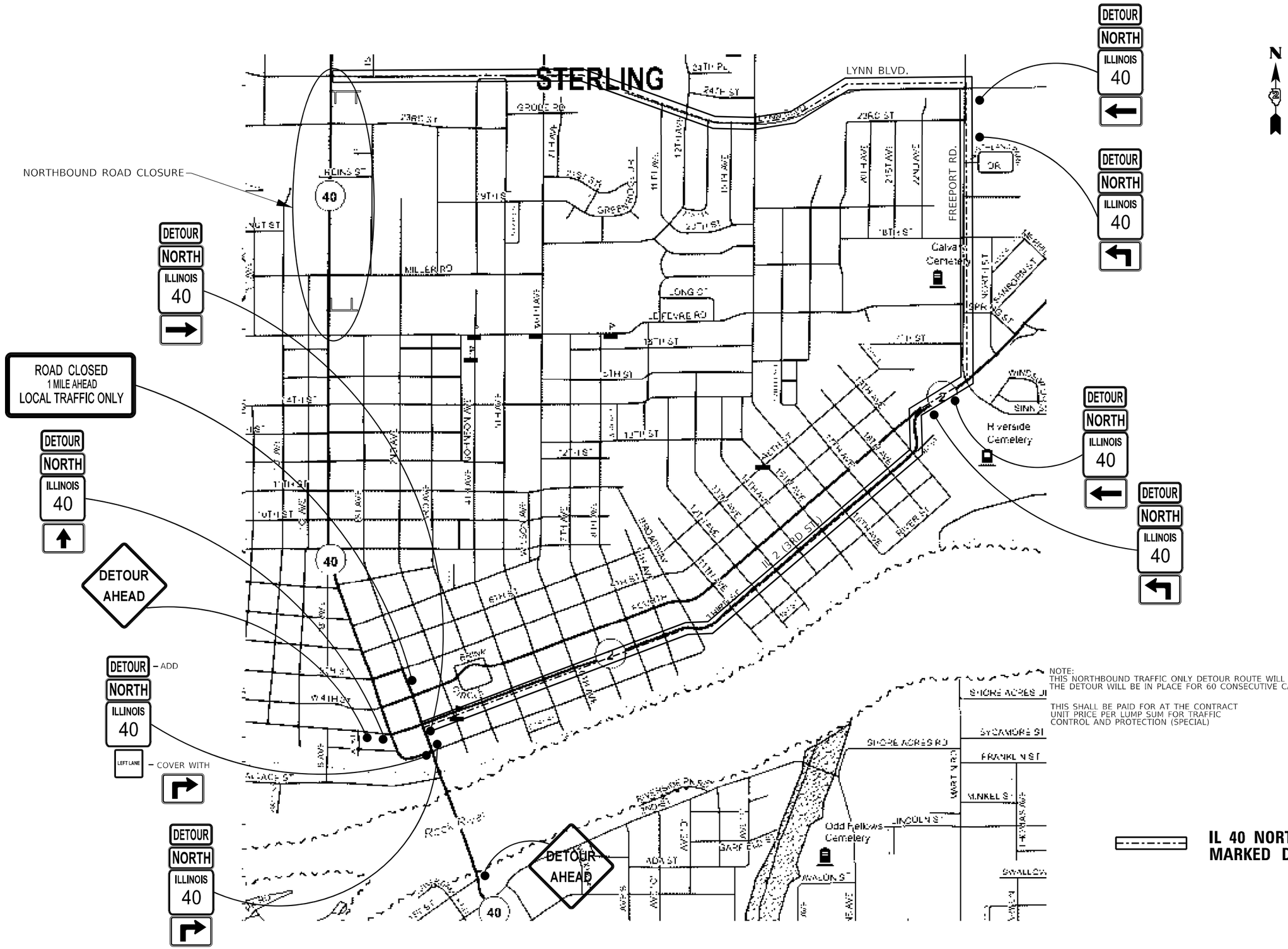

NOTE:
THIS NORTHBOUND TRAFFIC ONLY DETOUR ROUTE WILL BE IN PLACE FOR STAGE 1 ONLY
THE DETOUR WILL BE IN PLACE FOR 60 CONSECUTIVE CALENDAR DAYS.

THIS SHALL BE PAID FOR AT THE CONTRACT
UNIT PRICE PER LUMP SUM FOR TRAFFIC
CONTROL AND PROTECTION (SPECIAL)

IL 40 NORTHBOUND MARKED DETOUR ROUTE

MODEL: Default
FILE NAME: pw:\\ildot-pw.bentley.com:PWIDOT\Documents\IDOT Offices\District 2\Projects\64D78\Program Development\Studies & Plans\Design\CADD\CADsheets\D2_64D78-detour.dgn

USER NAME = cushmanbw	DESIGNED -	REVISED -	
	DRAWN -	REVISED -	
PLOT SCALE = 400.0000 ' / in.	CHECKED -	REVISED -	
PLOT DATE = Oct-22-2021 10:21:08 AM	DATE -	REVISED -	

STATE OF ILLINOIS
DEPARTMENT OF TRANSPORTATION

ROAD CLOSURE PLAN

SCALE: | SHEET OF SHEETS | STA. TO STA.

F.A.P. RTE.	SECTION	COUNTY	TOTAL SHEETS	SHEET NO.
646	9R &9RS-3	WHITESIDE	222	110

CONTRACT NO. 64D78

ILLINOIS | FED. AID PROJECT

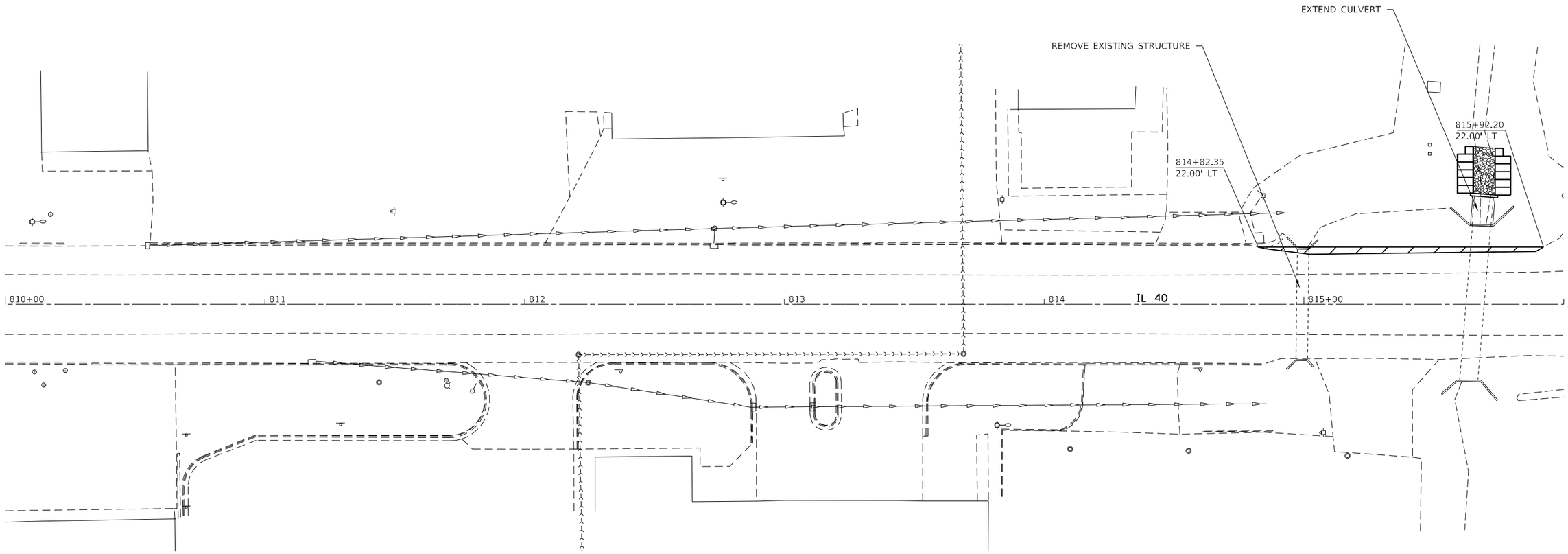

LEGEND

TEMPORARY PAVEMENT

MODEL: Default
FILE NAME: pw:\\ildot-pw.bentley.com:PWIDOT\Documents\IDOT Offices\District 2\Projects\64D78\Program Development\Studies & Plans\Design\CADD\CADsheets\D2-64D78-sht-Stage-1.dgn

USER NAME = hogensonjd	DESIGNED -	REVISED -	
	DRAWN -	REVISED -	
PLOT SCALE = 40.0000 ' / in.	CHECKED -	REVISED -	
PLOT DATE = 10/22/2021	DATE -	REVISED -	

STATE OF ILLINOIS
DEPARTMENT OF TRANSPORTATION

PRE-STAGE PLAN

SCALE: | SHEET OF SHEETS | STA. TO STA.

F.A.P. RTE.	SECTION	COUNTY	TOTAL SHEETS	SHEET NO.
646	9R & 9RS-3	WHITESIDE	222	111

CONTRACT NO. 64D78

ILLINOIS | FED. AID PROJECT

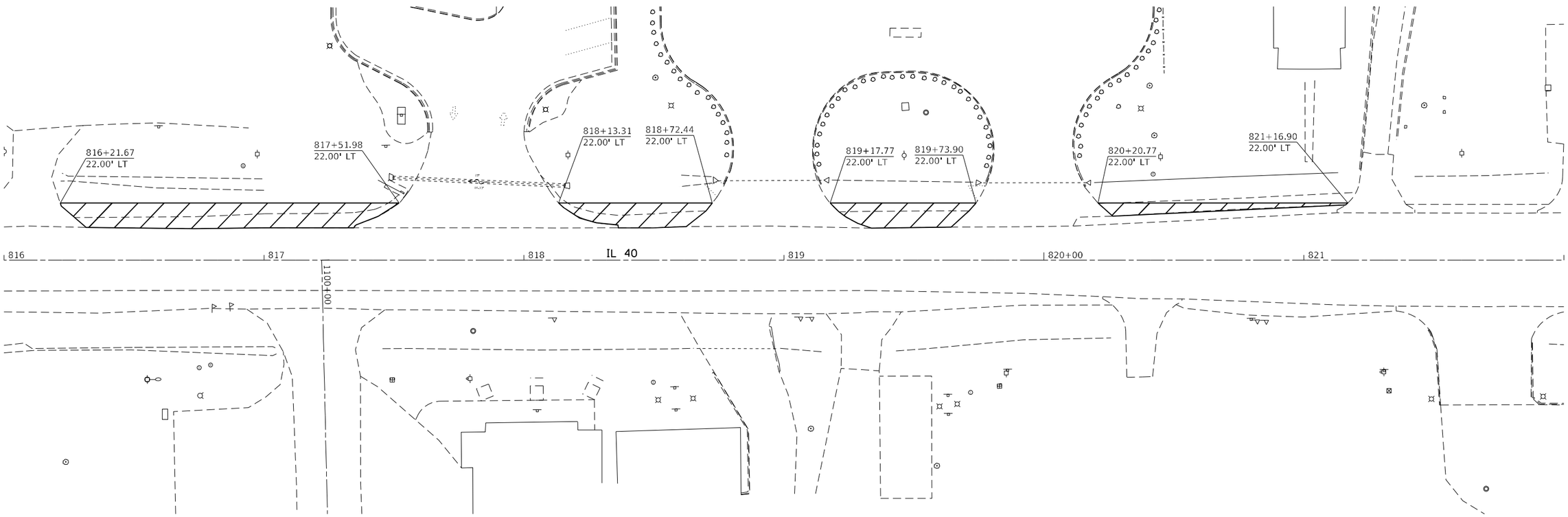

LEGEND

TEMPORARY PAVEMENT

USER NAME = hogensonjd	DESIGNED -	REVISED -	
	DRAWN -	REVISED -	
PLOT SCALE = 40.0000 ' / in.	CHECKED -	REVISED -	
PLOT DATE = 10/22/2021	DATE -	REVISED -	

STATE OF ILLINOIS
DEPARTMENT OF TRANSPORTATION

PRE-STAGE PLAN

SCALE: | SHEET OF SHEETS | STA. TO STA.

F.A.P. RTE.	SECTION	COUNTY	TOTAL SHEETS	SHEET NO.
646	9R & 9RS-3	WHITESIDE	222	112
		CONTRACT NO. 64D78		
	ILLINOIS	FED. AID PROJECT		

MODEL: Default
FILE NAME: pw:\\ildot-pw.bentley.com:PWIDOT\Documents\IDOT Offices\District 2\Projects\64D78\Program Development\Studies & Plans\Design\CADD-CAD\sheets\02_64D78-sht-Stage-1.dgn

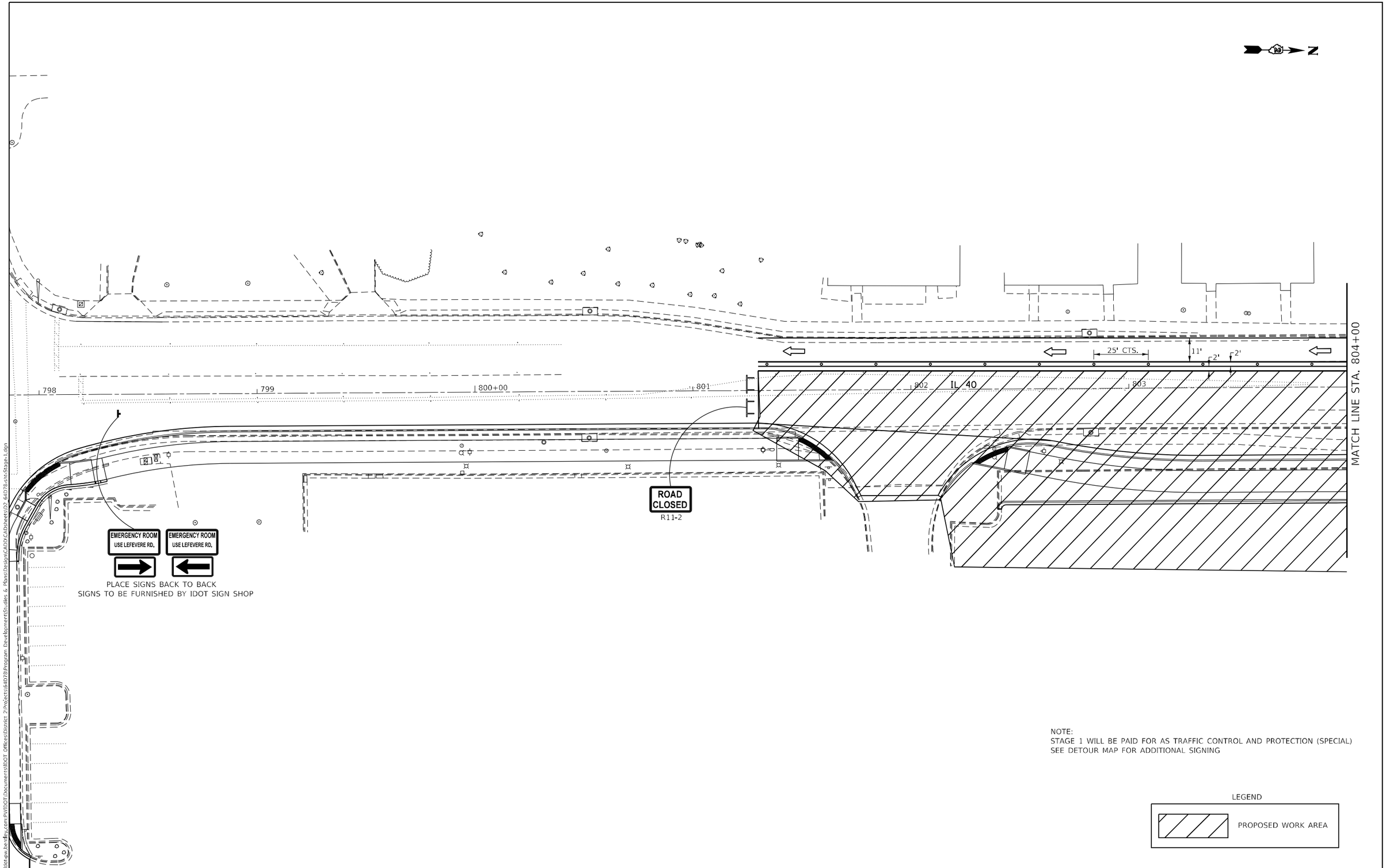

NOTE:
STAGE 1 WILL BE PAID FOR AS TRAFFIC CONTROL AND PROTECTION (SPECIAL)
SEE DETOUR MAP FOR ADDITIONAL SIGNING

MODEL: Default
FILE NAME: pw:\\ildot-pw.bentley.com:PWIDOT\Documents\IDOT Offices\District 2\Projects\64D78\Program Development\Studies & Plans\Design\CADD\CADsheets\02-64D78-sht-Stage-1.dgn

USER NAME = hogensonjd	DESIGNED -	REVISED -	
	DRAWN -	REVISED -	
PLOT SCALE = 40.0000 ' / in.	CHECKED -	REVISED -	
PLOT DATE = 10/22/2021	DATE -	REVISED -	

STATE OF ILLINOIS
DEPARTMENT OF TRANSPORTATION

STAGE 1 PLAN

SCALE: | SHEET OF SHEETS | STA. TO STA.

F.A.P. RTE.	SECTION	COUNTY	TOTAL SHEETS	SHEET NO.
646	9R & 9RS-3	WHITESIDE	222	113
		CONTRACT NO. 64D78		
		ILLINOIS	FED. AID PROJECT	

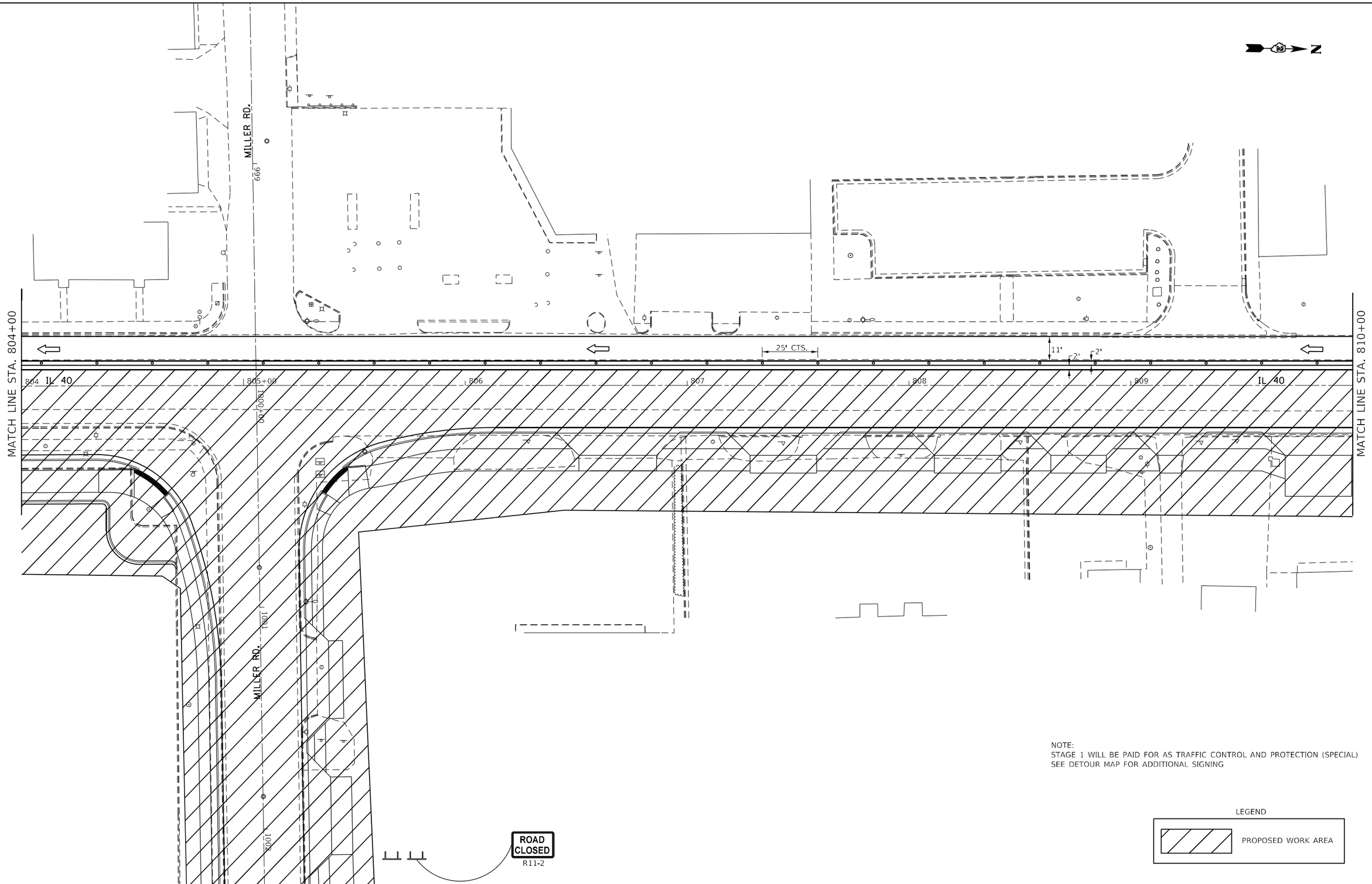

NOTE:
STAGE 1 WILL BE PAID FOR AS TRAFFIC CONTROL AND PROTECTION (SPECIAL)
SEE DETOUR MAP FOR ADDITIONAL SIGNING

LEGEND

PROPOSED WORK AREA

MODEL: Default
FILE NAME: pw:\\ildot-pw.bentley.com:PWIDOT\Documents\IDOT Offices\District 2\Project\64D78\Program Development\Studies & Plans\Design\CADD\CADsheets\02_64D78-sht-Stage-1.dgn

USER NAME = hogensonjd	DESIGNED -	REVISED -
	DRAWN -	REVISED -
PLOT SCALE = 40.0000 ' / in.	CHECKED -	REVISED -
PLOT DATE = 10/22/2021	DATE -	REVISED -

STATE OF ILLINOIS
DEPARTMENT OF TRANSPORTATION

STAGE 1 PLAN

SCALE: SHEET OF SHEETS STA. TO STA.

F.A.P. RTE.	SECTION	COUNTY	TOTAL SHEETS	SHEET NO.
646	9R & 9RS-3	WHITESIDE	222	114
		CONTRACT NO. 64D78		
		ILLINOIS	FED. AID PROJECT	

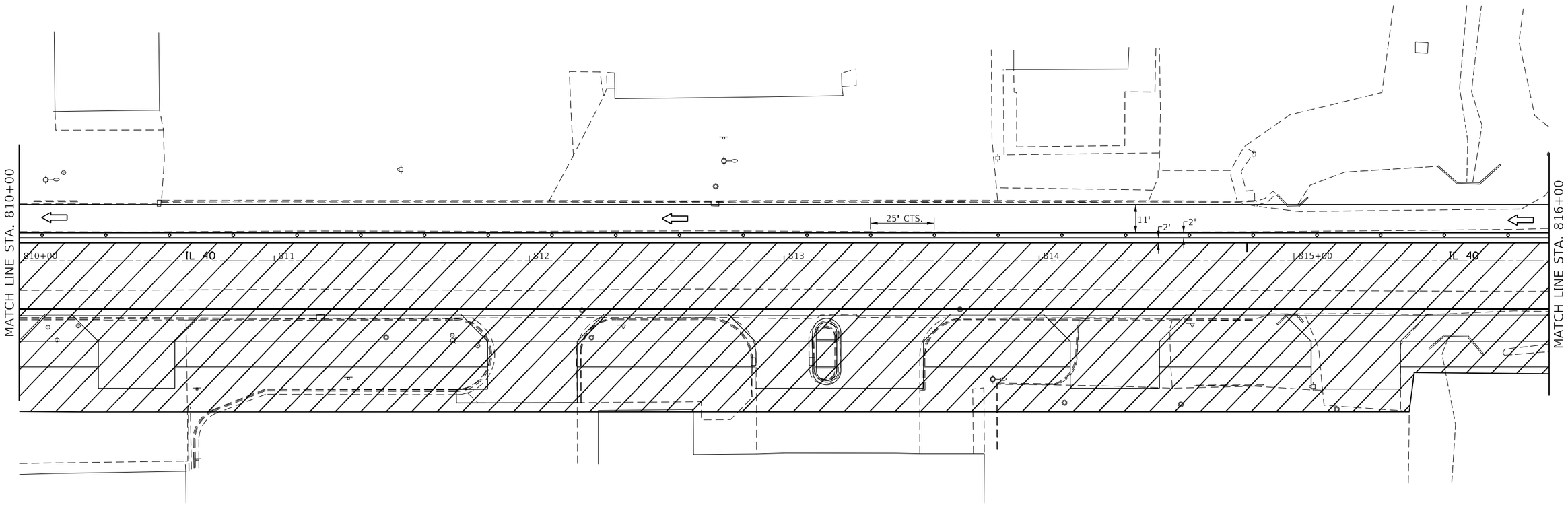

NOTE:
STAGE 1 WILL BE PAID FOR AS TRAFFIC CONTROL AND PROTECTION (SPECIAL)
SEE DETOUR MAP FOR ADDITIONAL SIGNING

LEGEND

PROPOSED WORK AREA

MODEL: Default
FILE NAME: pw:\\ildot-pw.bentley.com:PWIDOT\Documents\IDOT Offices\District 2\Projects\64D78\Program Development\Studies & Plans\Design\CADD\CADsheets\D2_64D78-sht-Stage-1.dgn

USER NAME = hogensonjd	DESIGNED -	REVISED -	
	DRAWN -	REVISED -	
PLOT SCALE = 40.0000 ' / in.	CHECKED -	REVISED -	
PLOT DATE = 10/22/2021	DATE -	REVISED -	

STATE OF ILLINOIS
DEPARTMENT OF TRANSPORTATION

STAGE 1 PLAN

SCALE: | SHEET OF SHEETS | STA. TO STA.

F.A.P. RTE.	SECTION	COUNTY	TOTAL SHEETS	SHEET NO.
646	9R & 9RS-3	WHITESIDE	222	115

CONTRACT NO. 64D78

ILLINOIS | FED. AID PROJECT

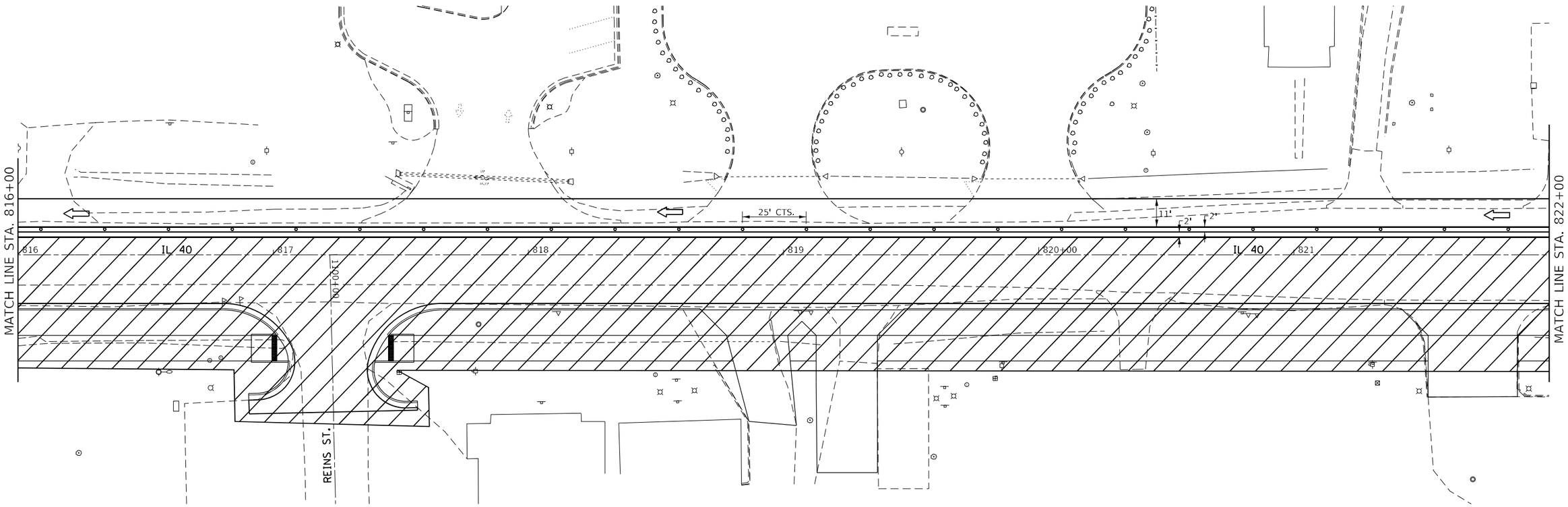

NOTE:
STAGE 1 WILL BE PAID FOR AS TRAFFIC CONTROL AND PROTECTION (SPECIAL)
SEE DETOUR MAP FOR ADDITIONAL SIGNING

LEGEND

PROPOSED WORK AREA

MODEL: Default
FILE NAME: pw:\\ildot-pw.bentley.com:PWIDOT\Documents\IDOT Offices\District 2\Projects\64D78\Program Development\Studies & Plans\Design\CADD\CADsheets\D> 64D78-sht-Stage-1.dgn

USER NAME = hogensonjd	DESIGNED -	REVISED -	
	DRAWN -	REVISED -	
PLOT SCALE = 40.0000 ' / in.	CHECKED -	REVISED -	
PLOT DATE = 10/22/2021	DATE -	REVISED -	

STATE OF ILLINOIS
DEPARTMENT OF TRANSPORTATION

STAGE 1 PLAN

SCALE: | SHEET OF SHEETS | STA. TO STA.

F.A.P. RTE.	SECTION	COUNTY	TOTAL SHEETS	SHEET NO.
646	9R & 9RS-3	WHITESIDE	222	116

CONTRACT NO. 64D78

ILLINOIS | FED. AID PROJECT

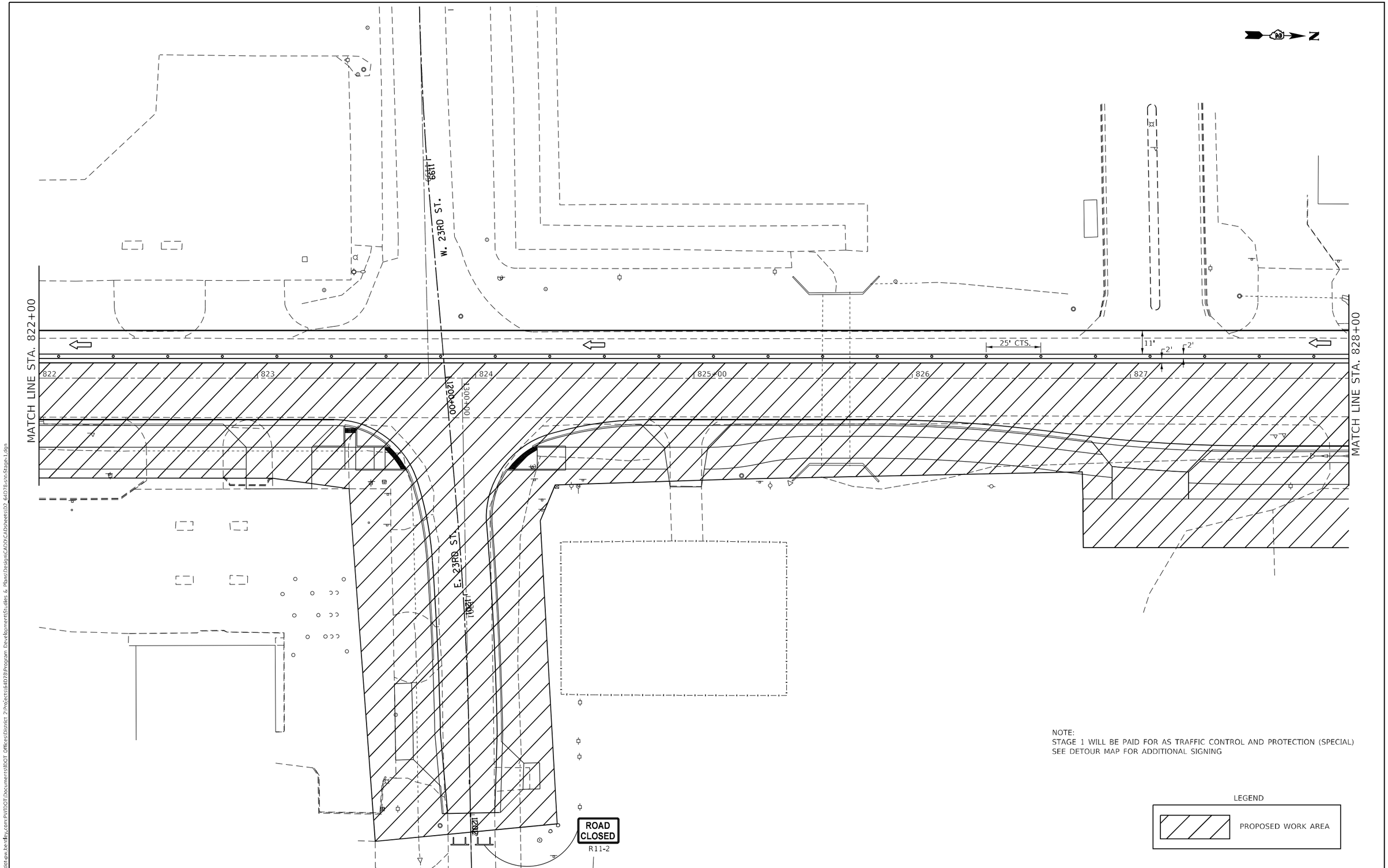

NOTE:
STAGE 1 WILL BE PAID FOR AS TRAFFIC CONTROL AND PROTECTION (SPECIAL)
SEE DETOUR MAP FOR ADDITIONAL SIGNING

LEGEND

PROPOSED WORK AREA

MODEL: Default
FILE NAME: pw:\\ildot-pw.bentley.com:PWIDOT\Documents\IDOT Offices\District 2\Projects\64D78\Program Development\Studies & Plans\Design\CADD\CADsheets\02-64D78-sht-Stage-1.dgn

USER NAME = hogensonjd	DESIGNED -	REVISED -	
	DRAWN -	REVISED -	
PLOT SCALE = 40.0000 ' / in.	CHECKED -	REVISED -	
PLOT DATE = 10/22/2021	DATE -	REVISED -	

STATE OF ILLINOIS
DEPARTMENT OF TRANSPORTATION

STAGE 1 PLAN

SCALE: | SHEET OF SHEETS | STA. TO STA.

F.A.P. RTE.	SECTION	COUNTY	TOTAL SHEETS	SHEET NO.
646	9R & 9RS-3	WHITESIDE	222	117
		CONTRACT NO. 64D78		
		ILLINOIS	FED. AID PROJECT	

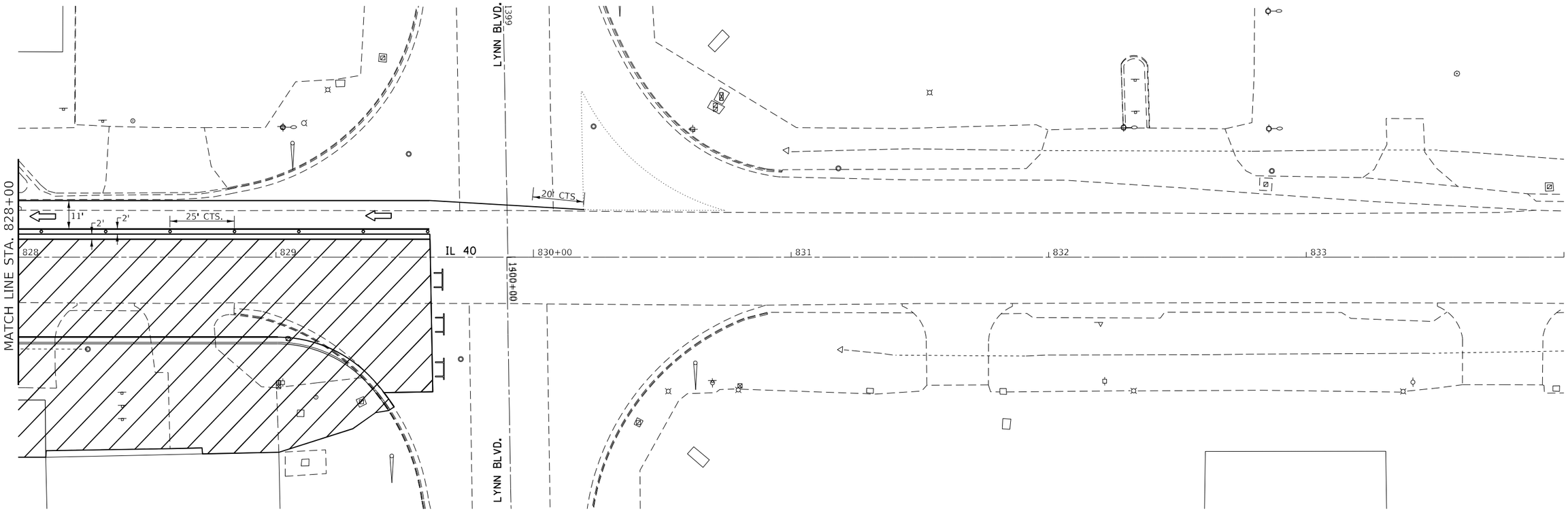

NOTE:
STAGE 1 WILL BE PAID FOR AS TRAFFIC CONTROL AND PROTECTION (SPECIAL)
SEE DETOUR MAP FOR ADDITIONAL SIGNING

LEGEND

PROPOSED WORK AREA

MODEL: Default
FILE NAME: pw:\\ildot-pw.bentley.com:PWIDOT\Documents\IDOT Offices\District 2\Projects\64D78\Program Development\Studies & Plans\Design\CADD\CADsheets\D2_64D78-sht-Stage-1.dgn

USER NAME = hogensonjd	DESIGNED -	REVISED -	
	DRAWN -	REVISED -	
PLOT SCALE = 40.0000 ' / in.	CHECKED -	REVISED -	
PLOT DATE = 10/22/2021	DATE -	REVISED -	

STATE OF ILLINOIS
DEPARTMENT OF TRANSPORTATION

STAGE 1 PLAN

SCALE: SHEET OF SHEETS STA. TO STA.

F.A.P. RTE.	SECTION	COUNTY	TOTAL SHEETS	SHEET NO.
646	9R & 9RS-3	WHITESIDE	222	118
		CONTRACT NO. 64D78		
		ILLINOIS	FED. AID PROJECT	

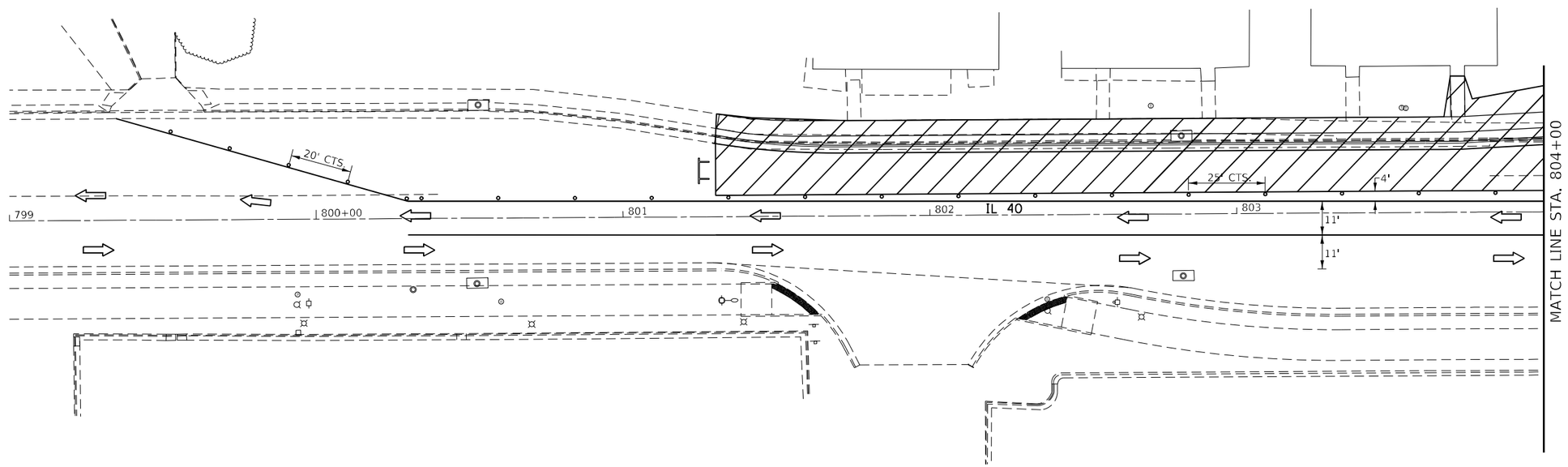

NOTE:
STAGE 1 & 2 WILL BE PAID FOR AS TRAFFIC CONTROL AND PROTECTION (SPECIAL)
SEE DETOUR MAP FOR ADDITIONAL SIGNING

LEGEND

PROPOSED WORK AREA

MODEL: Default
FILE NAME: pw:\\ildot-pw.bentley.com:PWIDOT\Documents\IDOT Offices\District 2\Projects\64D78\Program Development\Studies & Plans\Design\CADD\CADsheets\D3_64D78-sht-Stage-2.dgn

USER NAME = hogensonjd	DESIGNED -	REVISED -	
	DRAWN -	REVISED -	
PLOT SCALE = 40.0000 ' / in.	CHECKED -	REVISED -	
PLOT DATE = 10/22/2021	DATE -	REVISED -	

STATE OF ILLINOIS
DEPARTMENT OF TRANSPORTATION

STAGE 2 PLAN

SCALE: | SHEET OF SHEETS | STA. TO STA.

F.A.P. RTE.	SECTION	COUNTY	TOTAL SHEETS	SHEET NO.
646	9R & 9RS-3	WHITESIDE	222	119
		CONTRACT NO. 64D78		
		ILLINOIS FED. AID PROJECT		

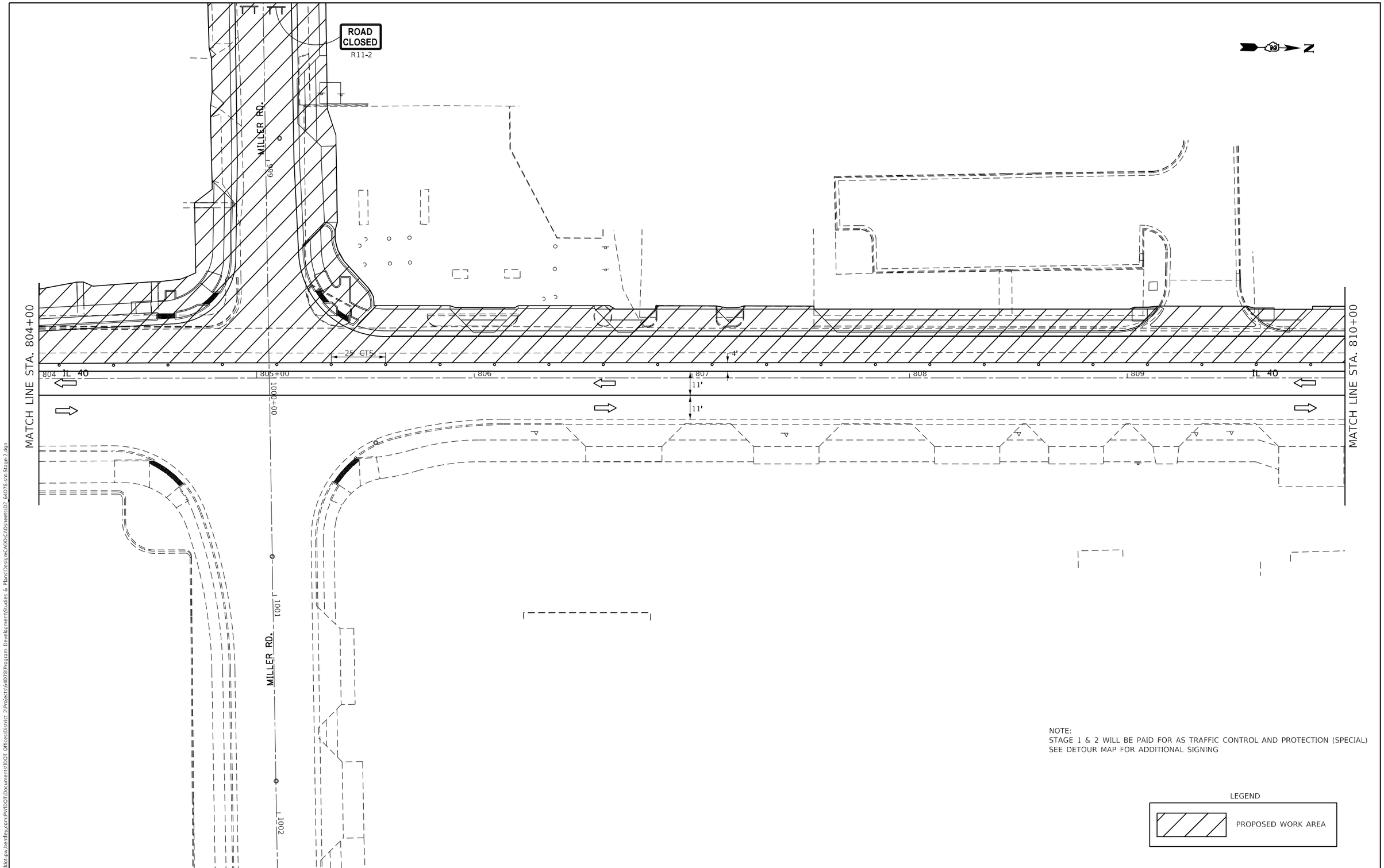

NOTE:
STAGE 1 & 2 WILL BE PAID FOR AS TRAFFIC CONTROL AND PROTECTION (SPECIAL)
SEE DETOUR MAP FOR ADDITIONAL SIGNING

LEGEND

PROPOSED WORK AREA

MODEL: Default
FILE NAME: pw:\\ildot-pw.bentley.com:PWIDOT\Documents\IDOT Offices\District 2\Projects\64D78\Program Development\Studies & Plans\Design\CADD\CAD\sheets\02_64D78-sht-Stage-2.dgn

USER NAME = hogensonjd	DESIGNED -	REVISED -	
	DRAWN -	REVISED -	
PLOT SCALE = 40.0000 ' / in.	CHECKED -	REVISED -	
PLOT DATE = 10/22/2021	DATE -	REVISED -	

STATE OF ILLINOIS
DEPARTMENT OF TRANSPORTATION

STAGE 2 PLAN

SCALE: | SHEET OF SHEETS | STA. TO STA.

F.A.P. RTE.	SECTION	COUNTY	TOTAL SHEETS	SHEET NO.
646	9R & 9RS-3	WHITESIDE	222	120
		CONTRACT NO. 64D78		
		ILLINOIS FED. AID PROJECT		

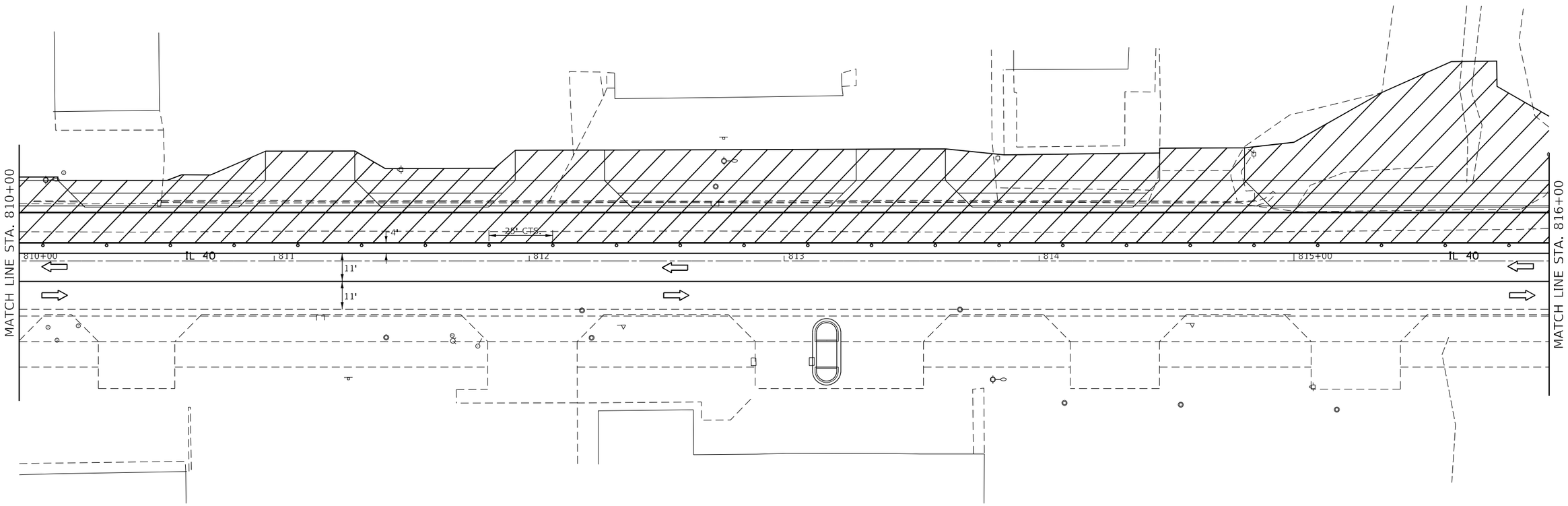

NOTE:
STAGE 1 & 2 WILL BE PAID FOR AS TRAFFIC CONTROL AND PROTECTION (SPECIAL)
SEE DETOUR MAP FOR ADDITIONAL SIGNING

LEGEND

PROPOSED WORK AREA

USER NAME = hogensonjd	DESIGNED -	REVISED -	
	DRAWN -	REVISED -	
PLOT SCALE = 40.0000 ' / in.	CHECKED -	REVISED -	
PLOT DATE = 10/22/2021	DATE -	REVISED -	

STATE OF ILLINOIS
DEPARTMENT OF TRANSPORTATION

STAGE 2 PLAN

SCALE: SHEET OF SHEETS STA. TO STA.

F.A.P. RTE.	SECTION	COUNTY	TOTAL SHEETS	SHEET NO.
646	9R & 9RS-3	WHITESIDE	222	121
		CONTRACT NO. 64D78		
		ILLINOIS FED. AID PROJECT		

MODEL: Default
FILE NAME: pw:\\ildot-pw.bentley.com:PWIDOT\Documents\IDOT Offices\District 2\Projects\64D78\Program Development\Studies & Plans\Design\CADD-CAD\sheets\02-64D78-sht-Stage-2.dgn

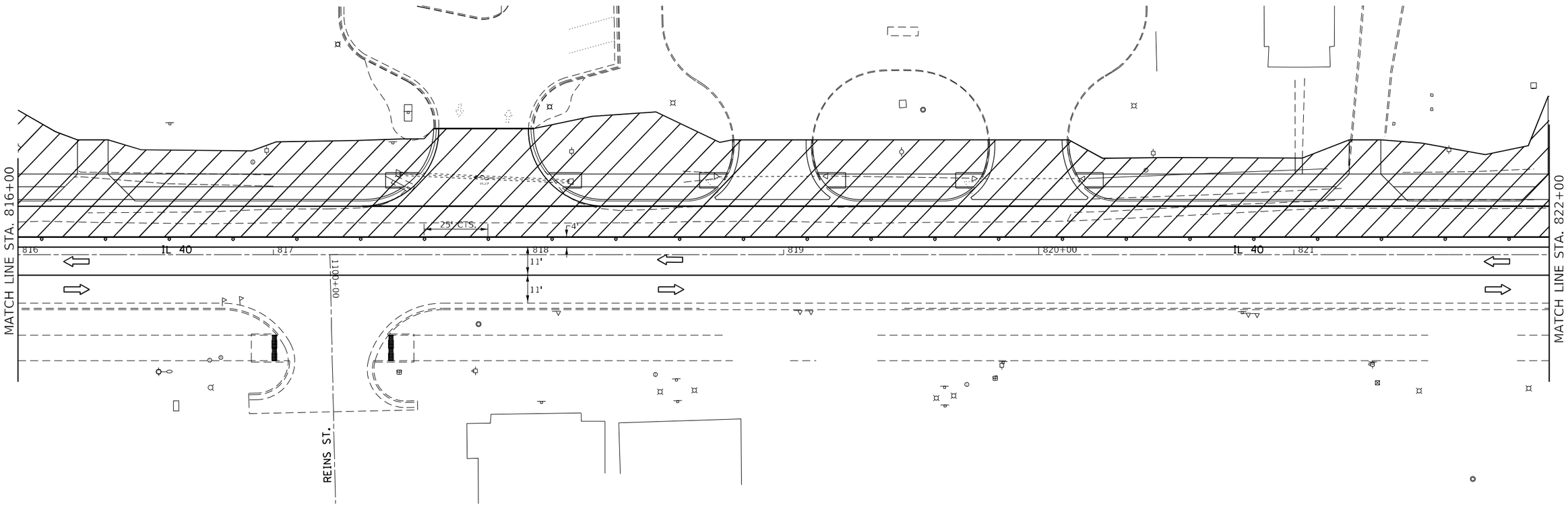

NOTE:
STAGE 1 & 2 WILL BE PAID FOR AS TRAFFIC CONTROL AND PROTECTION (SPECIAL)
SEE DETOUR MAP FOR ADDITIONAL SIGNING

LEGEND

PROPOSED WORK AREA

MODEL: Default
FILE NAME: pw:\\ildot-pw.bentley.com:PWIDOT\Documents\IDOT Offices\District 2\Projects\64D78\Program Development\Studies & Plans\Design\CADD\CADsheets\D> 64D78-sht-Stage-2.dgn

USER NAME = hogensonjd	DESIGNED -	REVISED -	
	DRAWN -	REVISED -	
PLOT SCALE = 40.0000 ' / in.	CHECKED -	REVISED -	
PLOT DATE = 10/22/2021	DATE -	REVISED -	

STATE OF ILLINOIS
DEPARTMENT OF TRANSPORTATION

STAGE 2 PLAN

SCALE: | SHEET OF SHEETS | STA. TO STA.

F.A.P. RTE.	SECTION	COUNTY	TOTAL SHEETS	SHEET NO.
646	9R & 9RS-3	WHITESIDE	222	122
		CONTRACT NO. 64D78		
	ILLINOIS	FED. AID PROJECT		

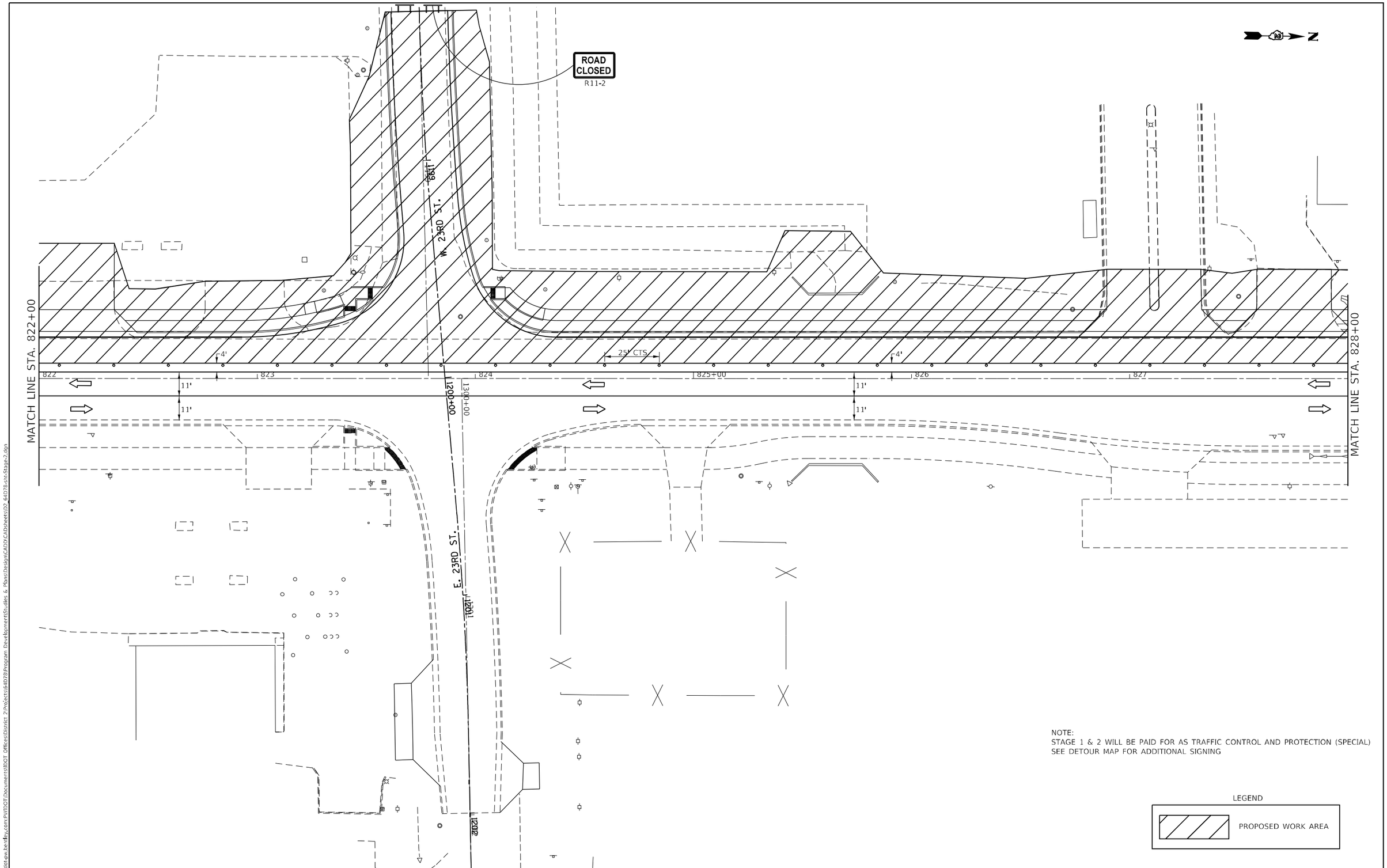

NOTE:
STAGE 1 & 2 WILL BE PAID FOR AS TRAFFIC CONTROL AND PROTECTION (SPECIAL)
SEE DETOUR MAP FOR ADDITIONAL SIGNING

LEGEND

PROPOSED WORK AREA

MODEL: Default
FILE NAME: pw:\\ildot-pw.bentley.com:PWIDOT\Documents\IDOT Offices\District 2\Projects\64D78\Program Development\Studies & Plans\Design\CADD\CADsheets\02_64D78-sht-Stage-2.dgn

USER NAME = hogensonjd	DESIGNED -	REVISED -	
	DRAWN -	REVISED -	
PLOT SCALE = 40.0000 ' / in.	CHECKED -	REVISED -	
PLOT DATE = 10/22/2021	DATE -	REVISED -	

STATE OF ILLINOIS
DEPARTMENT OF TRANSPORTATION

STAGE 2 PLAN

SCALE: | SHEET OF SHEETS | STA. TO STA.

F.A.P. RTE.	SECTION	COUNTY	TOTAL SHEETS	SHEET NO.
646	9R & 9RS-3	WHITESIDE	222	123
		CONTRACT NO. 64D78		
		ILLINOIS FED. AID PROJECT		

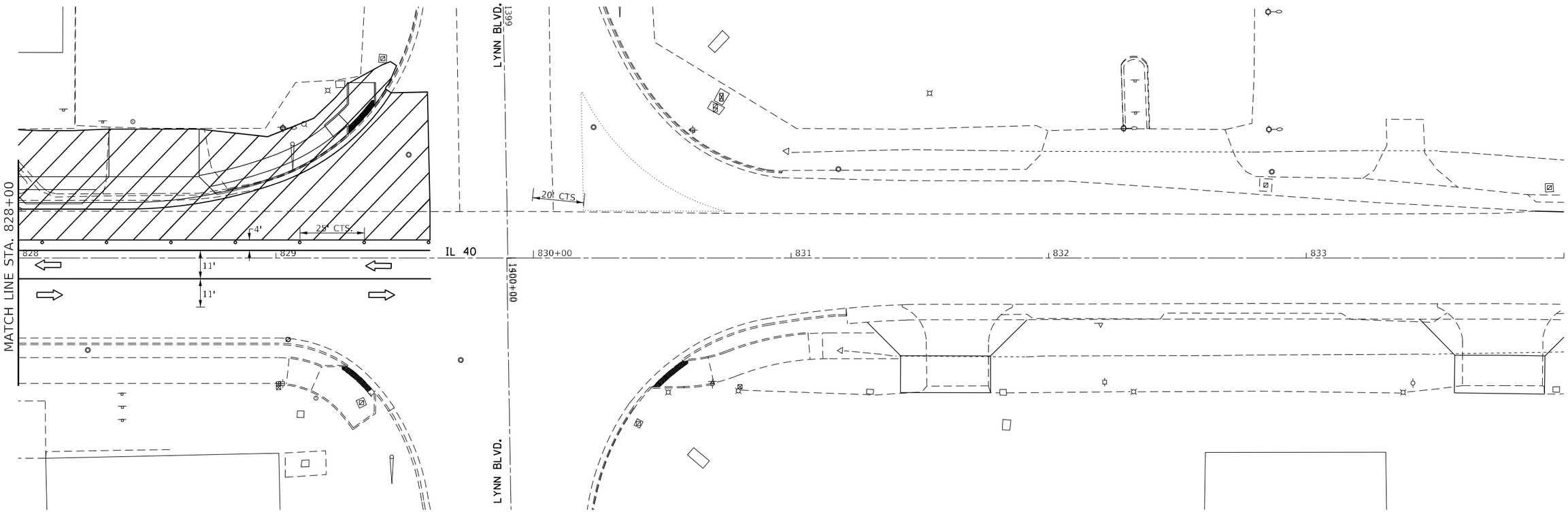

NOTE:
STAGE 1 & 2 WILL BE PAID FOR AS TRAFFIC CONTROL AND PROTECTION (SPECIAL)
SEE DETOUR MAP FOR ADDITIONAL SIGNING

LEGEND

PROPOSED WORK AREA

MODEL: Default
FILE NAME: pw:\\ildot-pw.bentley.com:PWIDOT\Documents\IDOT Offices\District 2\Projects\64D78\Program Development\Studies & Plans\Design\CADD\CADsheets\D2_64D78-sht-Stage-2.dgn

USER NAME = hogensonjd	DESIGNED -	REVISED -	
	DRAWN -	REVISED -	
PLOT SCALE = 40.0000 ' / in.	CHECKED -	REVISED -	
PLOT DATE = 10/22/2021	DATE -	REVISED -	

STATE OF ILLINOIS
DEPARTMENT OF TRANSPORTATION

STAGE 2 PLAN

SCALE: SHEET OF SHEETS STA. TO STA.

F.A.P. RTE.	SECTION	COUNTY	TOTAL SHEETS	SHEET NO.
646	9R & 9RS-3	WHITESIDE	222	124
		CONTRACT NO. 64D78		
		ILLINOIS	FED. AID PROJECT	

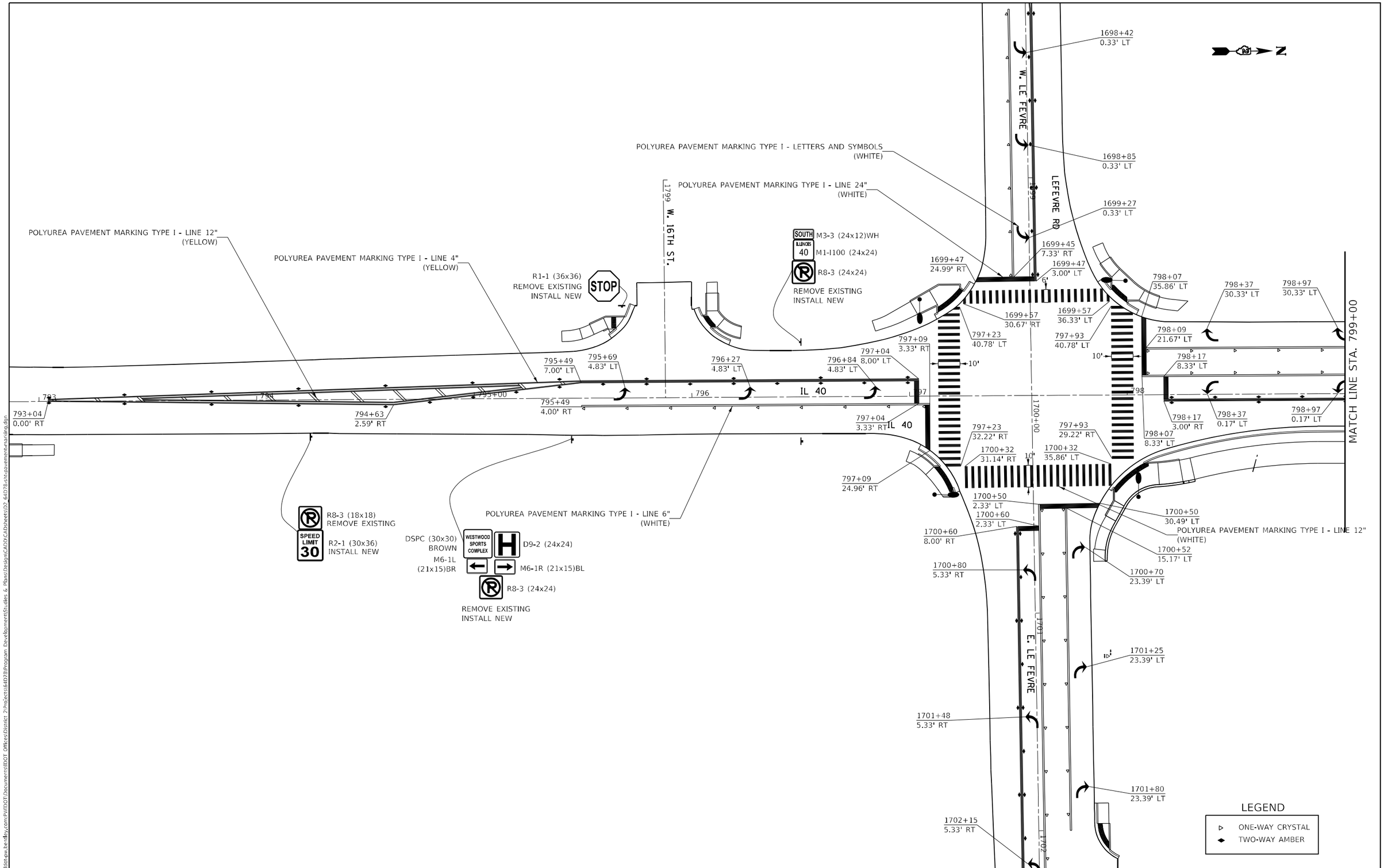

MODEL: Default
FILE NAME: pw:\\ildot-pw.bentley.com:PWIDOT\Documents\IDOT Offices\District 2\Projects\64D78\Program Development\Studies & Plans\Design\CADD\CADsheets\D2 64D78-sht-pavement-marking.dgn

USER NAME = hogensonjd	DESIGNED -	REVISED -	
	DRAWN -	REVISED -	
PLOT SCALE = 40.0000 ' / in.	CHECKED -	REVISED -	
PLOT DATE = 10/22/2021	DATE -	REVISED -	

STATE OF ILLINOIS
DEPARTMENT OF TRANSPORTATION

PAVEMENT MARKING

SCALE: | SHEET OF SHEETS | STA. TO STA.

F.A.P. RTE.	SECTION	COUNTY	TOTAL SHEETS	SHEET NO.
646	9R & 9RS-3	WHITESIDE	222	125

CONTRACT NO. 64D78

ILLINOIS | FED. AID PROJECT

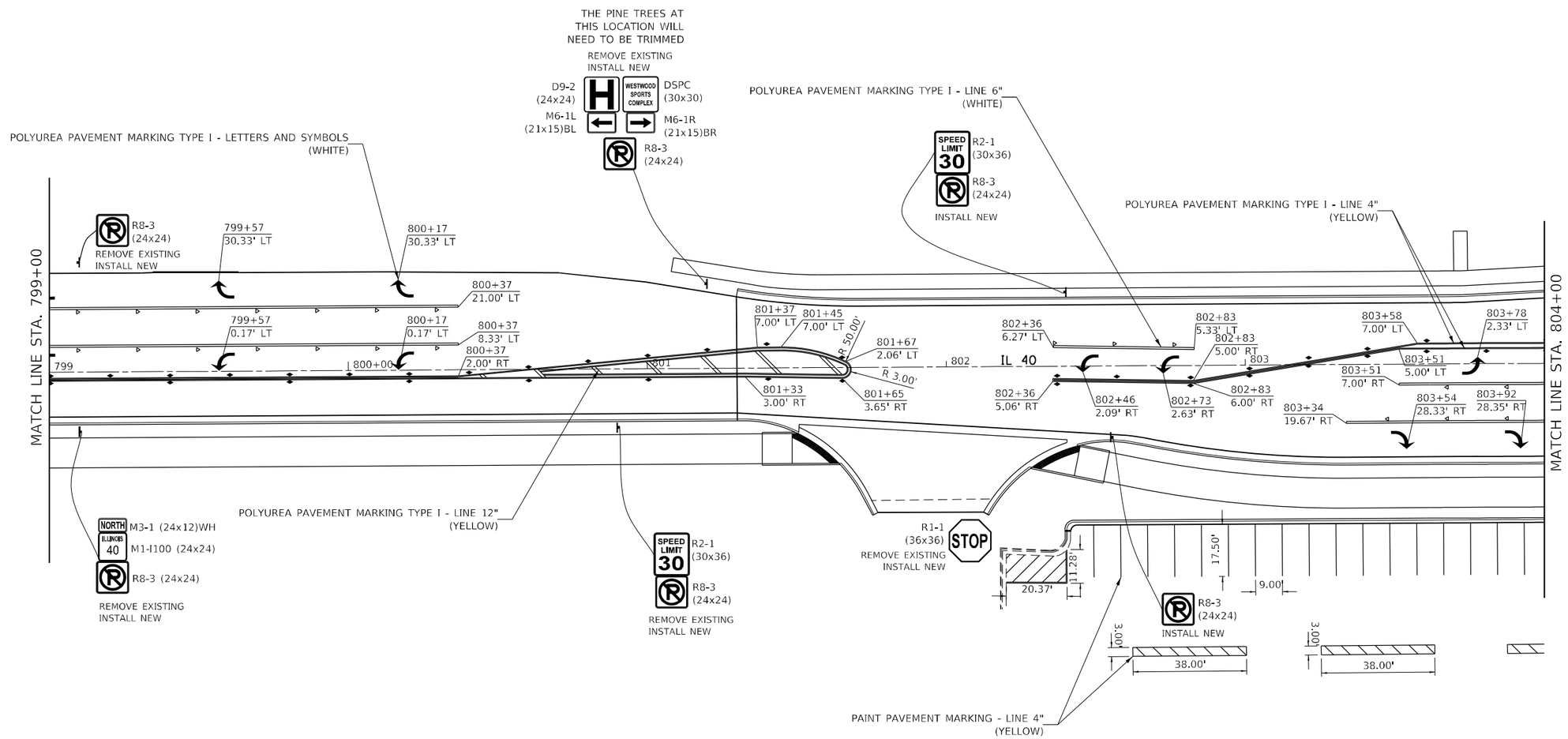

LEGEND

- ▷ ONE-WAY CRYSTAL
- ◆ TWO-WAY AMBER

MODEL: Default
FILE NAME: pw:\\ildot-pw.bentley.com:PWIDOT\Documents\IDOT Offices\District 2\Projects\64D78\Program Development\Studies & Plans\Design\CADD\CADsheets\D3> 64D78-sht-pavement-marking.dgn

USER NAME = hogensonjd	DESIGNED -	REVISED -	
	DRAWN -	REVISED -	
PLOT SCALE = 40.0000 ' / in.	CHECKED -	REVISED -	
PLOT DATE = 10/22/2021	DATE -	REVISED -	

STATE OF ILLINOIS
DEPARTMENT OF TRANSPORTATION

PAVEMENT MARKING

SCALE: | SHEET OF SHEETS | STA. TO STA.

F.A.P. RTE.	SECTION	COUNTY	TOTAL SHEETS	SHEET NO.
646	9R & 9RS-3	WHITESIDE	222	126

CONTRACT NO. 64D78

ILLINOIS | FED. AID PROJECT

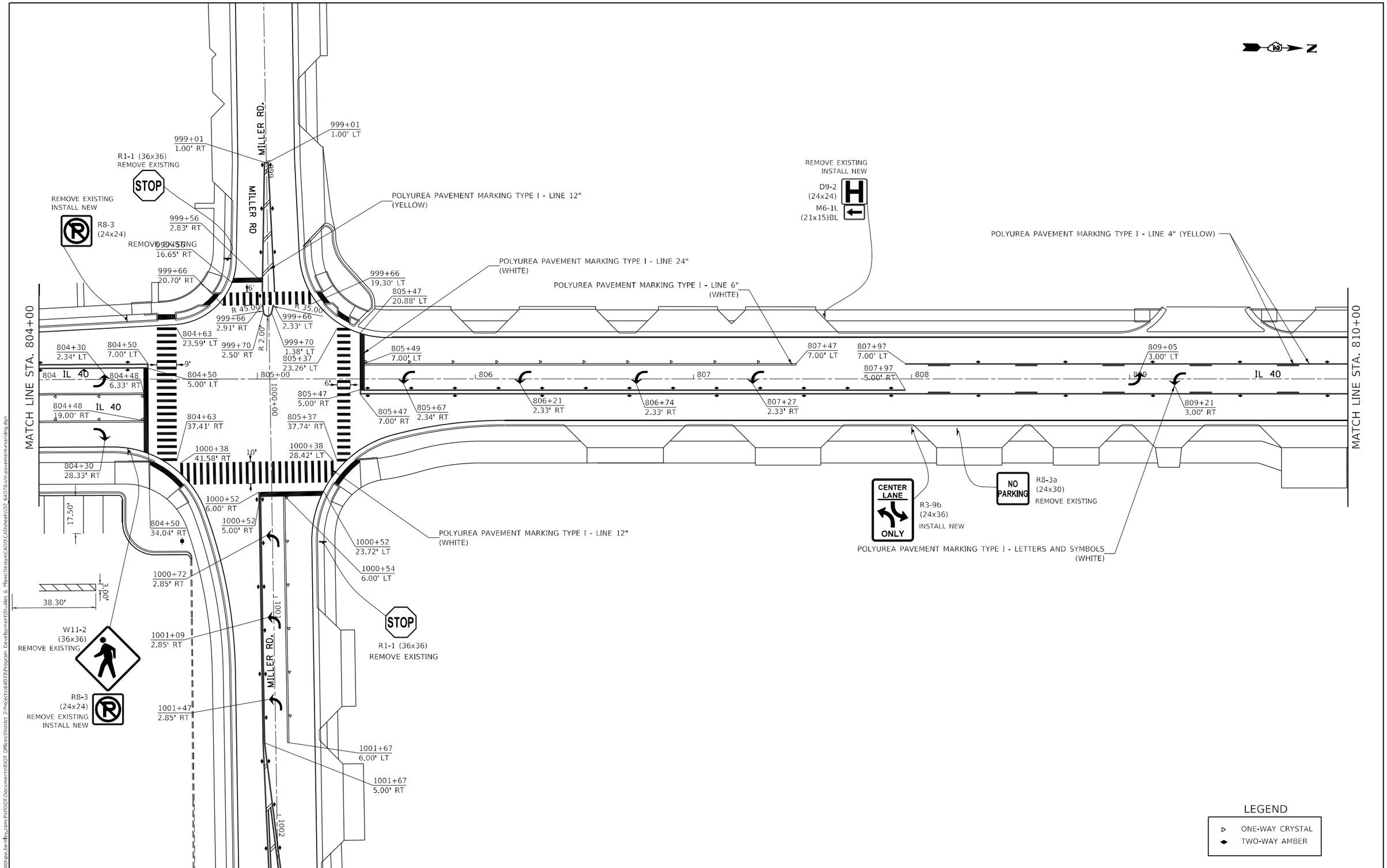

MODEL: Default
FILE NAME: pw:\\ildot-pw.bentley.com:PWIDOT\Documents\IDOT Offices\District 2\Project\64D78\Program Development\Studies & Plans\Design\CADD\CADsheets\02-64D78-sht-pavement-marking.dgn

USER NAME = hogensonjd	DESIGNED -	REVISED -	
	DRAWN -	REVISED -	
PLOT SCALE = 40.0000 ' / in.	CHECKED -	REVISED -	
PLOT DATE = 10/22/2021	DATE -	REVISED -	

STATE OF ILLINOIS
DEPARTMENT OF TRANSPORTATION

PAVEMENT MARKING

SCALE: | SHEET OF SHEETS | STA. TO STA.

F.A.P. RTE.	SECTION	COUNTY	TOTAL SHEETS	SHEET NO.
646	9R & 9RS-3	WHITESIDE	222	127

CONTRACT NO. 64D78

ILLINOIS | FED. AID PROJECT

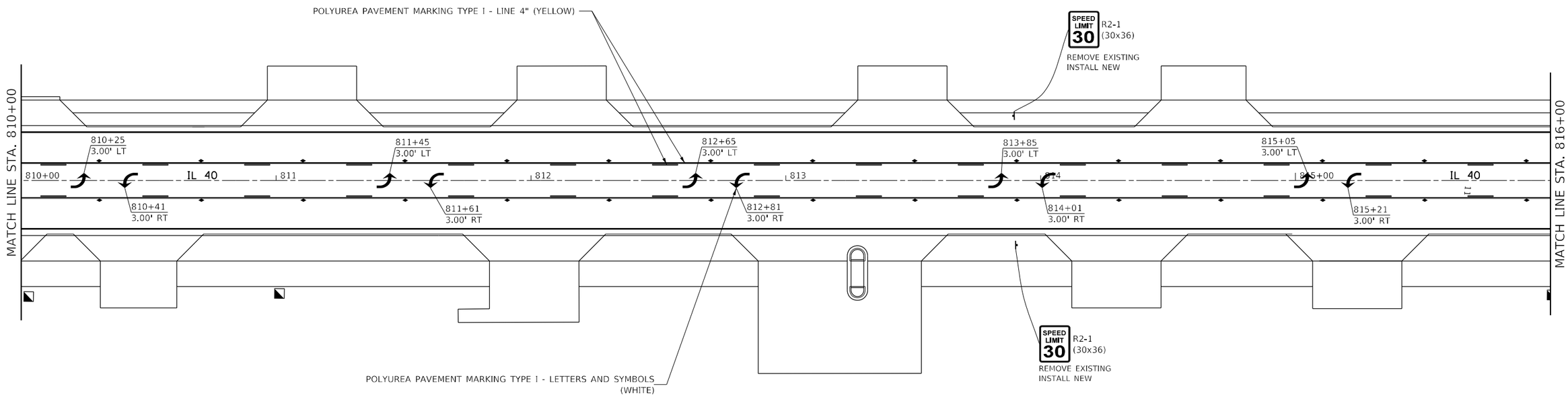

LEGEND

- ▷ ONE-WAY CRYSTAL
- ◆ TWO-WAY AMBER

MODEL: Default
FILE NAME: pw:\\ildot-pw.bentley.com:PWIDOT\Documents\IDOT Offices\District 2\Projects\64D78\Program Development\Studies & Plans\Design\CADD\CADsheets\D2_64D78-sht-pavement-marking.dgn

USER NAME = hogensonjd	DESIGNED -	REVISED -	
	DRAWN -	REVISED -	
PLOT SCALE = 40.0000 ' / in.	CHECKED -	REVISED -	
PLOT DATE = 10/22/2021	DATE -	REVISED -	

STATE OF ILLINOIS
DEPARTMENT OF TRANSPORTATION

PAVEMENT MARKING

SCALE: | SHEET OF SHEETS | STA. TO STA.

F.A.P. RTE.	SECTION	COUNTY	TOTAL SHEETS	SHEET NO.
646	9R & 9RS-3	WHITESIDE	222	128
		CONTRACT NO. 64D78		
		ILLINOIS FED. AID PROJECT		

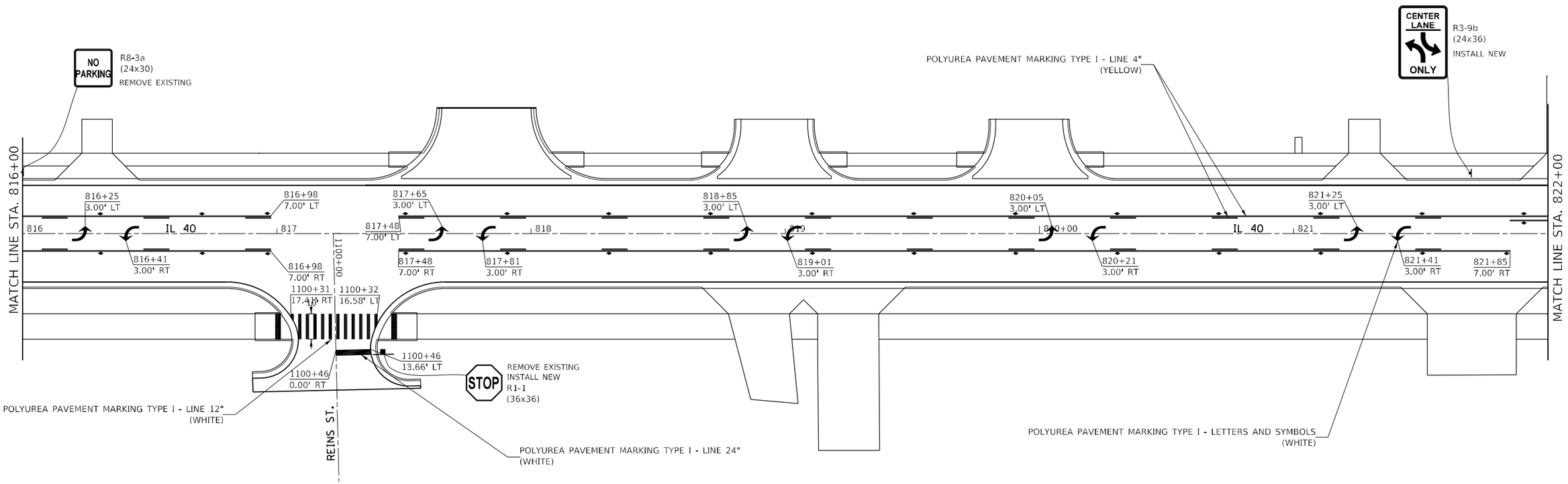

LEGEND

▷ ONE-WAY CRYSTAL

◆ TWO-WAY AMBER

USER NAME = hogensonjd	DESIGNED -	REVISED -	
	DRAWN -	REVISED -	
PLOT SCALE = 40.0000 ' / in.	CHECKED -	REVISED -	
PLOT DATE = 10/22/2021	DATE -	REVISED -	

STATE OF ILLINOIS
DEPARTMENT OF TRANSPORTATION

PAVEMENT MARKING

SCALE: SHEET OF SHEETS STA. TO STA.

F.A.P. RTE.	SECTION	COUNTY	TOTAL SHEETS	SHEET NO.
646	9R & 9RS-3	WHITESIDE	222	129

CONTRACT NO. 64D78

ILLINOIS FED. AID PROJECT

MODEL: Default
FILE NAME: pw:\\ildot-pw.bentley.com:PWIDOT\Documents\IDOT Offices\District 2\Projects\64D78\Program Development\Studies & Plans\Design\CADD\CADsheets\D3_64D78-sht-pavement-marking.dgn

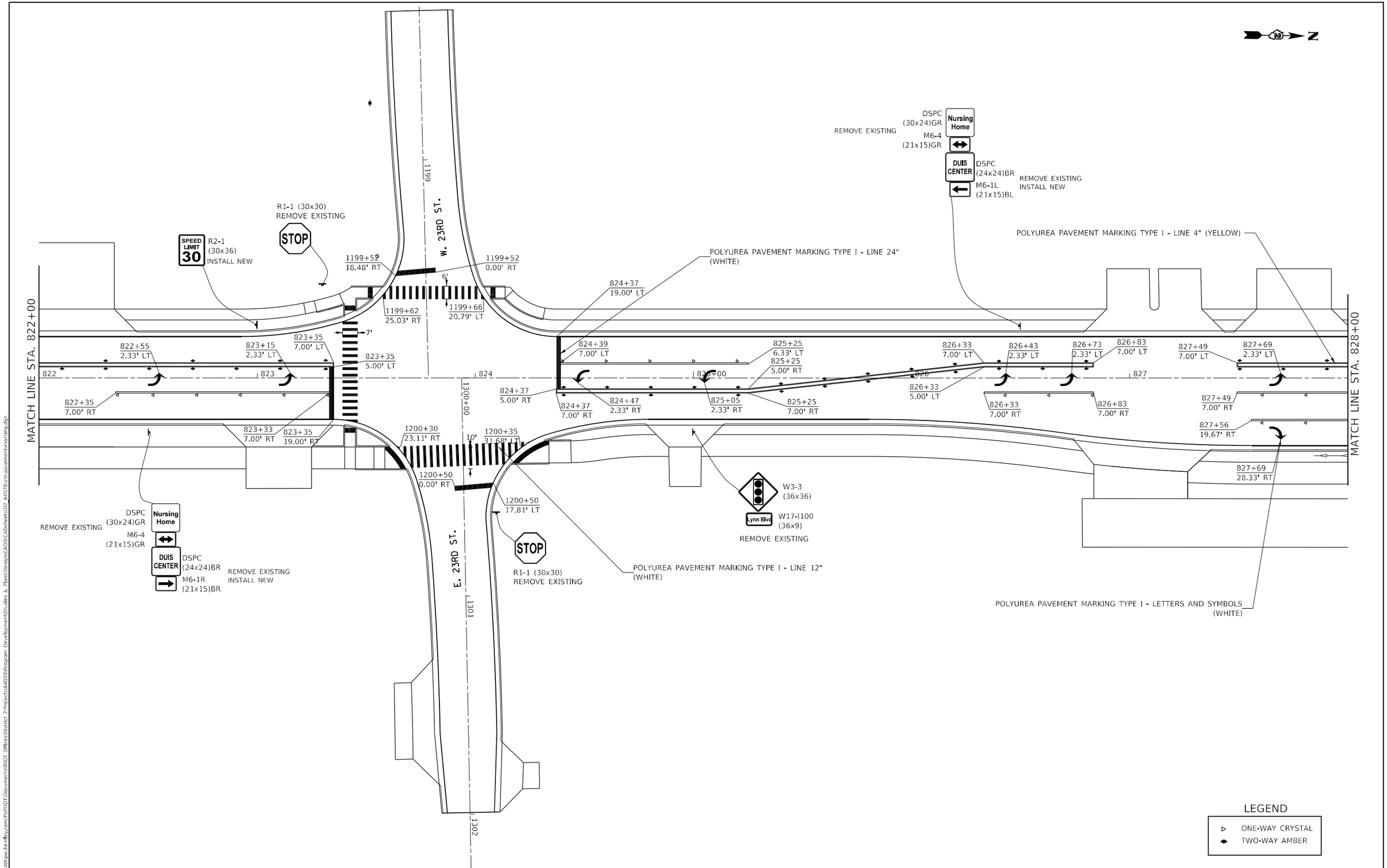

LEGEND

- ▷ ONE-WAY CRYSTAL
- ◆ TWO-WAY AMBER

MODEL: Default
FILE NAME: pw:\\ildot-pw.bentley.com:PWIDOT\Documents\IDOT Offices\District 2\Projects\64D78\Program Development\Studies & Plans\Design\CADD\CADsheets\D2_64D78-sht-pavement-marking.dgn

USER NAME = hogensonjd	DESIGNED -	REVISED -	
	DRAWN -	REVISED -	
PLOT SCALE = 40.0000 ' / in.	CHECKED -	REVISED -	
PLOT DATE = 10/22/2021	DATE -	REVISED -	

STATE OF ILLINOIS
DEPARTMENT OF TRANSPORTATION

PAVEMENT MARKING

SCALE: | SHEET OF SHEETS | STA. | TO STA.

F.A.P. RTE.	SECTION	COUNTY	TOTAL SHEETS	SHEET NO.
646	9R & 9RS-3	WHITESIDE	222	130
		CONTRACT NO. 64D78		
	ILLINOIS	FED. AID PROJECT		

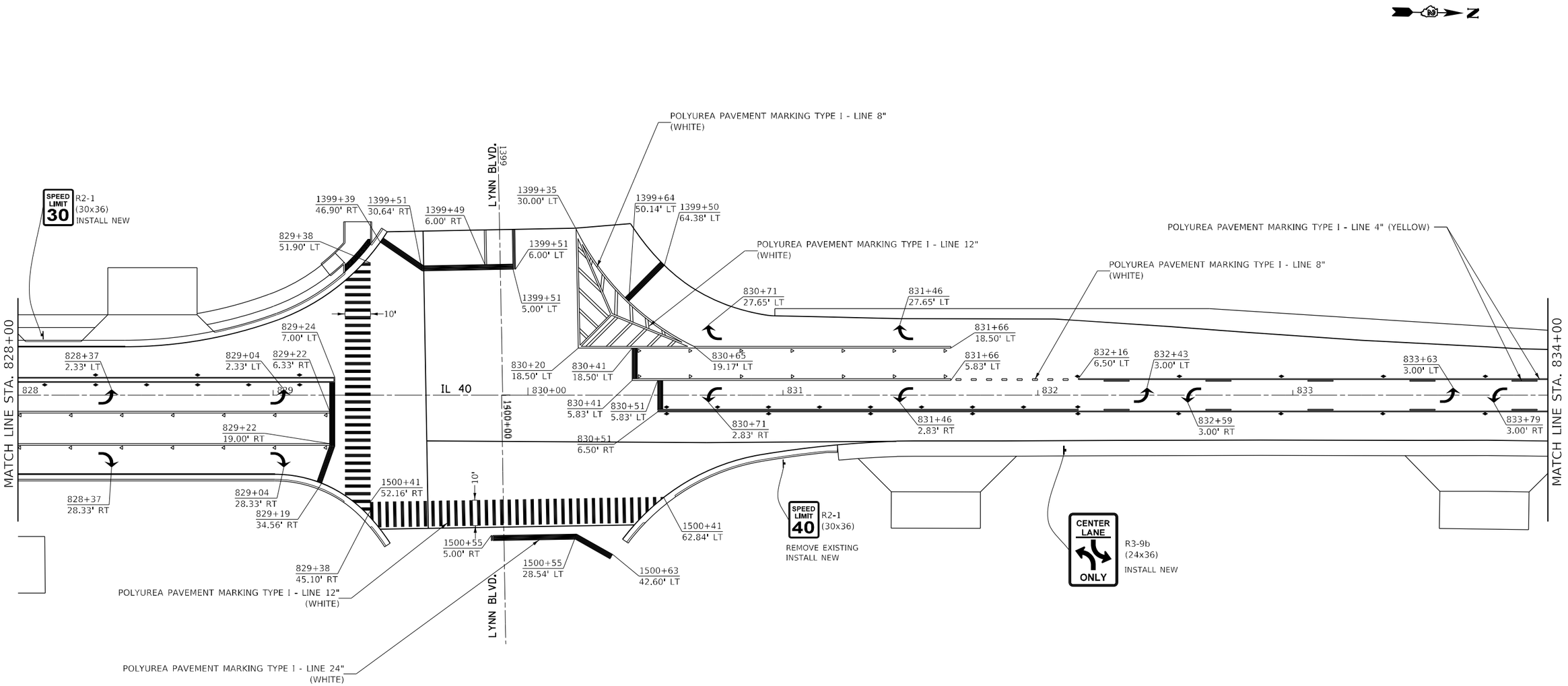

LEGEND

- ▷ ONE-WAY CRYSTAL
- ◆ TWO-WAY AMBER

MODEL: Default
FILE NAME: pw:\\ildot-pw.bentley.com:PWIDOT\Documents\IDOT Offices\District 2\Projects\64D78\Program Development\Studies & Plans\Design\CADD\CADsheets\02-64D78-sh-pavement-marking.dgn

USER NAME = hogensonjd	DESIGNED -	REVISED -	
	DRAWN -	REVISED -	
PLOT SCALE = 40.0000 ' / in.	CHECKED -	REVISED -	
PLOT DATE = 10/22/2021	DATE -	REVISED -	

STATE OF ILLINOIS
DEPARTMENT OF TRANSPORTATION

PAVEMENT MARKING

SCALE: | SHEET OF SHEETS | STA. TO STA.

F.A.P. RTE.	SECTION	COUNTY	TOTAL SHEETS	SHEET NO.
646	9R & 9RS-3	WHITESIDE	222	131
		CONTRACT NO. 64D78		
	ILLINOIS	FED. AID PROJECT		

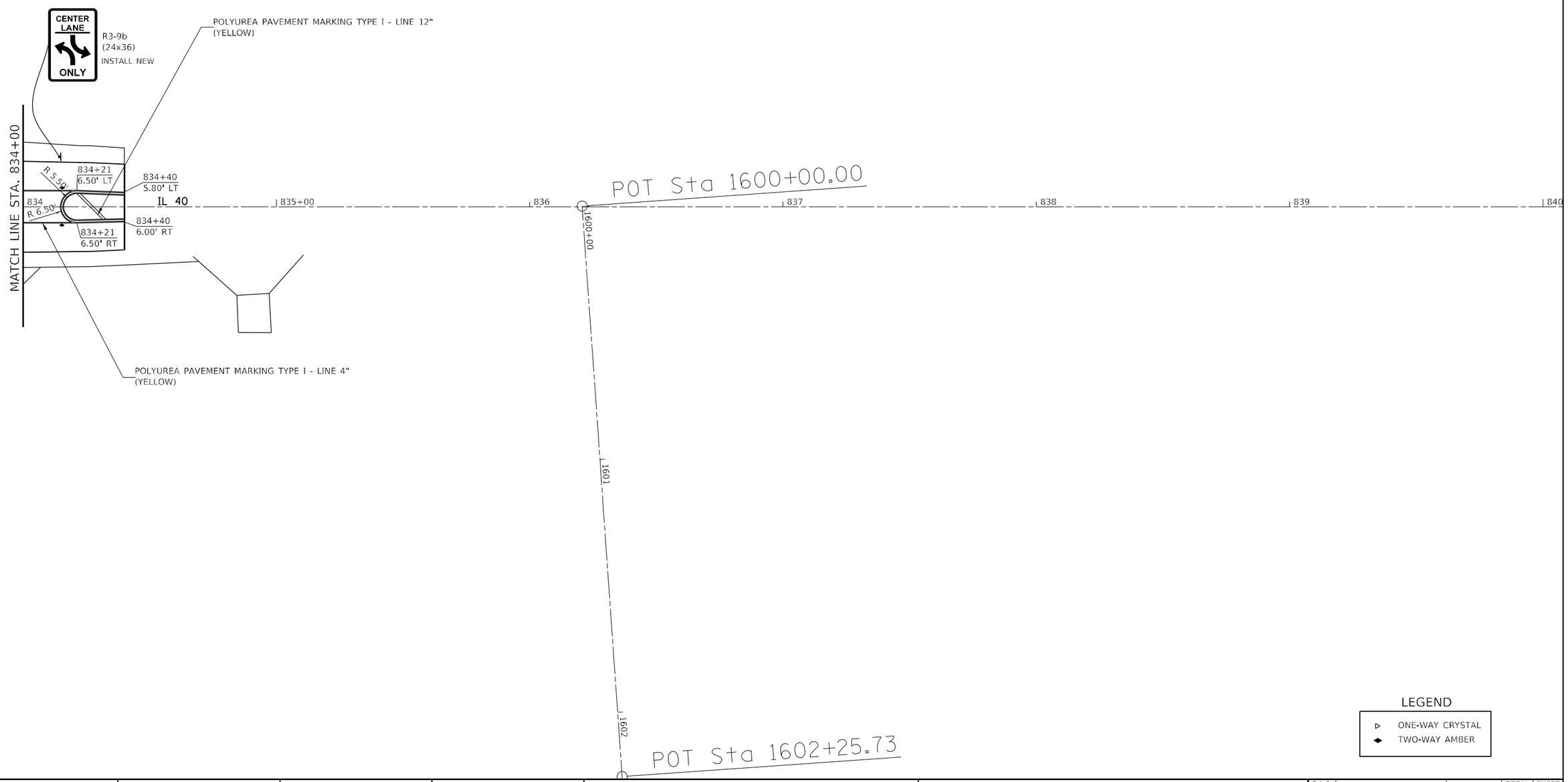

LEGEND

▷	ONE-WAY CRYSTAL
◆	TWO-WAY AMBER

MODEL: Default
FILE NAME: pw:\\ildot-pw.bentley.com:PWIDOT\Documents\IDOT Offices\District 2\Projects\64D78\Program Development\Studies & Plans\Design\CADD\CADsheets\D2_64D78-sht-pavement-marking.dgn

USER NAME = hogensonjd	DESIGNED -	REVISED -	
	DRAWN -	REVISED -	
PLOT SCALE = 40.0000 ' / in.	CHECKED -	REVISED -	
PLOT DATE = 10/22/2021	DATE -	REVISED -	

STATE OF ILLINOIS
DEPARTMENT OF TRANSPORTATION

PAVEMENT MARKING

SCALE: | SHEET OF SHEETS | STA. | TO STA.

F.A.P. RTE.	SECTION	COUNTY	TOTAL SHEETS	SHEET NO.
646	9R & 9RS-3	WHITESIDE	222	132
		CONTRACT NO. 64D78		
	ILLINOIS	FED. AID PROJECT		

799+57
30.33' LT

799+57
0.17' LT

REMOVE EXISTING
INSTALL NEW
R8-3
(24x24)

NORTH
ILLINOIS
40
M3-1 (24x12)WH
M1-I100 (24x24)
R8-3 (24x24)
REMOVE EXISTING
INSTALL NEW

798+97
30.33' LT

798+97
0.17' LT

798+37
30.33' LT

798+37
0.17' LT

POLYUREA PAVEMENT MARKING TYPE I - LETTERS AND SYMBOLS

IL 40

798+17
3.00' RT

798+09
21.67' LT

798+07
35.86' LT

798+17
8.33' LT

798+07
8.33' LT

797+93
29.22' RT

1700+50
30.49' LT

POLYUREA PAVEMENT MARKING TYPE I - LINE 4"
(YELLOW)

797+93
40.78' LT

1700+70
23.39' LT

1701+25
23.39' LT

1701+80
23.39' LT

POLYUREA PAVEMENT MARKING TYPE I - LINE 12"
(YELLOW)

1699+57
36.33' LT

1700+32
35.86' LT

1700+52
15.17' LT

1702+00
15.17' LT

1699+47
3.00' LT

1697+77
3.00' LT

1698+42
0.33' LT

1698+85
0.33' LT

LEFEVRE RD

1699+27
0.33' LT

W. LE FEVRE

1700+50
3.00' LT

1702+35
3.00' LT

1702+35
7.00' RT

1703+25
3.00' LT

1703+65
1.87' LT

E. LE FEVRE

R 3.00'

1697+78
2.98' RT

1698+22
2.00' LT

1700+00

1701

1702

1703

R 2.00'

1698+22
8.00' RT

1699+45
8.00' RT

1699+57
30.67' RT

1700+32
31.14' RT

1700+60
8.00' RT

1700+80
5.33' RT

1701+48
5.33' RT

1702+15
5.33' RT

1702+35
8.00' RT

1703+54
4.60' RT

1703+65
1.95' RT

R 30.00'

1700+60
2.33' LT

797+23
40.78' LT

1699+47
24.99' RT

POLYUREA PAVEMENT MARKING TYPE I - LINE 6"
(WHITE)

797+04
8.00' LT

797+23
32.22' RT

POLYUREA PAVEMENT MARKING TYPE I - LINE 12"
(WHITE)

797+09
24.96' RT

796+84
4.83' LT

POLYUREA PAVEMENT MARKING TYPE I - LINE 24"
(WHITE)

M3-3 (24x12)WH
SOUTH
ILLINOIS
40
M1-I100 (24x24)
R8-3 (24x24)
REMOVE EXISTING
INSTALL NEW

797+09
3.33' RT

797+04
3.33' RT

796+27
4.83' LT

D9-2
(24x24)
M6-1R (21x15)
BL
R8-3 (18x18)
REMOVE EXISTING

1799 W. 16TH ST.

R1-1
(36x36)
REMOVE EXISTING
INSTALL NEW

795+69
4.83' LT

LEGEND

ONE-WAY CRYSTAL
TWO-WAY AMBER

MODEL: Default
FILE NAME: pw:\\ildot-pw.bentley.com:PWIDOT\Documents\IDOT Offices\District 2\Projects\64D78\Program Development\Studies & Plans\Design\CADD\CADsheets\D2_64D78-sht-pavement-marking.dgn

USER NAME = hogensonjd	DESIGNED -	REVISED -	
	DRAWN -	REVISED -	
PLOT SCALE = 40.0000 ' / in.	CHECKED -	REVISED -	
PLOT DATE = 10/22/2021	DATE -	REVISED -	

STATE OF ILLINOIS
DEPARTMENT OF TRANSPORTATION

PAVEMENT MARKING

SCALE: | SHEET OF SHEETS | STA. TO STA.

F.A.P. RTE.	SECTION	COUNTY	TOTAL SHEETS	SHEET NO.
646	9R & 9RS-3	WHITESIDE	222	133

CONTRACT NO. 64D78

ILLINOIS | FED. AID PROJECT

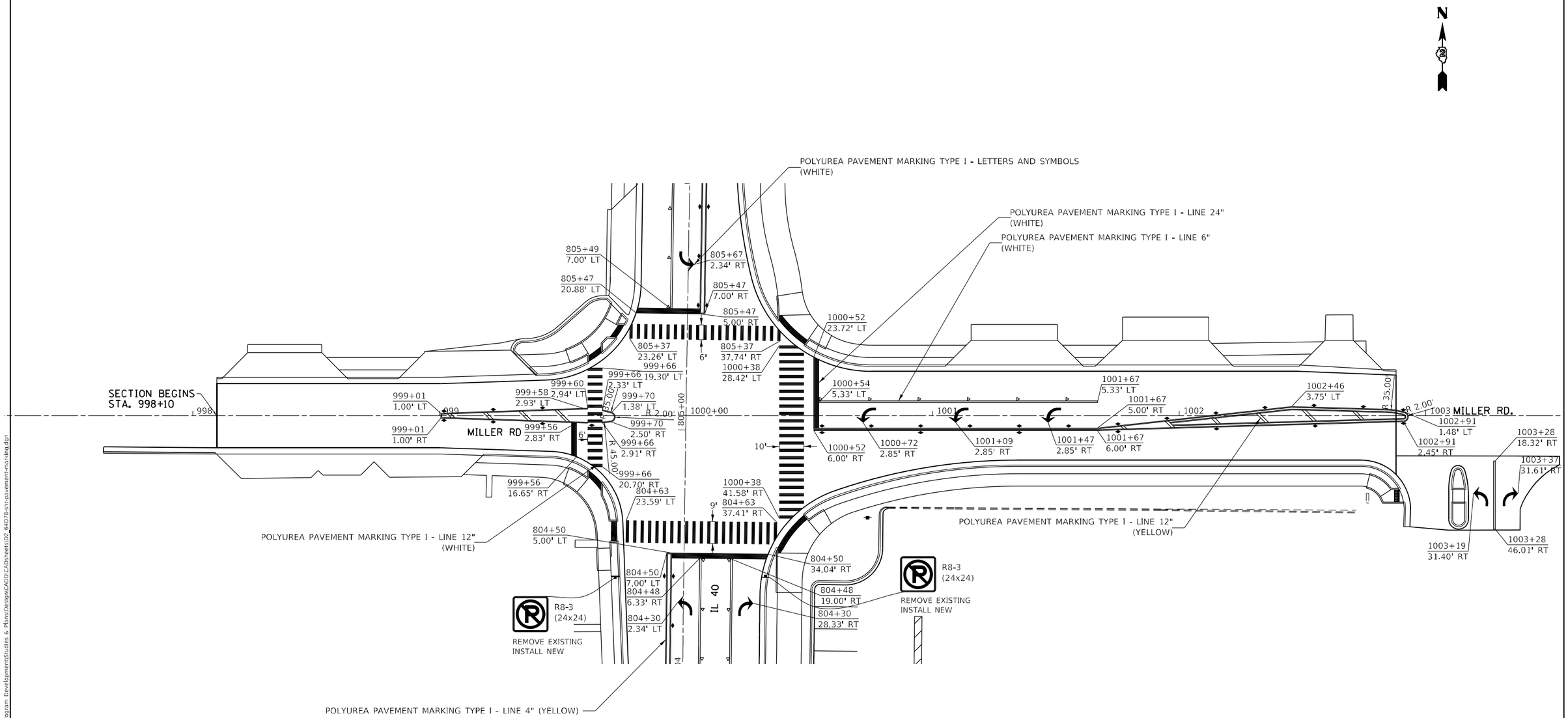

LEGEND

- ▷ ONE-WAY CRYSTAL
- ◆ TWO-WAY AMBER

USER NAME = hogensonjd	DESIGNED -	REVISED -	
	DRAWN -	REVISED -	
PLOT SCALE = 40.0000 ' / in.	CHECKED -	REVISED -	
PLOT DATE = 10/22/2021	DATE -	REVISED -	

STATE OF ILLINOIS
DEPARTMENT OF TRANSPORTATION

PAVEMENT MARKING

SCALE: | SHEET OF SHEETS | STA. TO STA.

F.A.P. RTE.	SECTION	COUNTY	TOTAL SHEETS	SHEET NO.
646	9R & 9RS-3	WHITESIDE	222	134
		CONTRACT NO. 64D78		
		ILLINOIS FED. AID PROJECT		

MODEL: Default
FILE NAME: pw:\\ildot-pw.bentley.com:PWIDOT\Documents\IDOT Offices\District 2\Projects\64D78\Program Development\Studies & Plans\Design\CADD\CADsheets\02-64D78-sht-pavement-mrking.dgn

	TABULATION OF SIGNAL QUANTITIES IL 40 (LOCUST ST)		LE FEVRE	MILLER RD	ST MARY RD	LYNN BLVD	INTER-CONNECT	
PAY CODE	ITEM	UNIT						TOTAL
72000100	SIGN PANEL - TYPE 1	SQ FT	0	15	10	20	3	48
72800100	TELESCOPING STEEL SIGN SUPPORT	FOOT	0	0	0	0	49	49
81028740	UNDERGROUND CONDUIT, COILABLE NONMETALLIC CONDUIT, 1 1/2" DIA.	FOOT	209	123	90	55	0	14.8
81028750	UNDERGROUND CONDUIT, COILABLE NONMETALLIC CONDUIT, 2" DIA.	FOOT	0	0	0	0	3239	3239
81028760	UNDERGROUND CONDUIT, COILABLE NONMETALLIC CONDUIT, 2 1/2" DIA.	FOOT	113	42	109	130	0	394
81028790	UNDERGROUND CONDUIT, COILABLE NONMETALLIC CONDUIT, 4" DIA.	FOOT	318	252	235	367	0	1172
81400700	HANDHOLE, PORTLAND CEMENT CONCRETE	EACH	2	3	3	3	7	18
81400710	HEAVY-DUTY HANDHOLE, PORTLAND CEMENT CONCRETE	EACH	0	0	0	0	1	1
81400720	DOUBLE HANDHOLE, PORTLAND CEMENT CONCRETE	EACH	1	1	1	1	0	4
81702110	ELECTRIC CABLE IN CONDUIT, 600V (XLP TYPE USE) 1/C NO 10	FOOT	1498	846	1013	1742	0	5099
* 82110007	LUMINAIRE, LED ROADWAY, OUTPUT DESIGNATION G	EACH	4	3	3	4	0	14
* 85000200	MAINTENANCE OF EXISTING TRAFFIC SIGNAL INSTALLATION	L SUM	1	0	0	1	0	2
85700200	FULL-ACTUATED CONTROLLER AND TYPE IV CABINET	EACH	1	1	1	1	0	4

	TABULATION OF SIGNAL QUANTITIES IL 40 (LOCUST ST)		LE FEVRE	MILLER RD	ST MARY RD	LYNN BLVD	INTER-CONNECT	
PAY CODE	**ITEM**	**UNIT**						**TOTAL**
86000100	MASTER CONTROLLER	EACH	0	0	0	1	0	1
87300901	ELECTRIC CABLE IN CONDUIT, TRACER, No. 12 1C	FOOT	0	0	0	0	3343	3343
87301215	ELECTRIC CABLE IN CONDUIT, SIGNAL, NO. 14 2C	FOOT	1225	1074	641	639	0	3579
87301225	ELECTRIC CABLE IN CONDUIT, SIGNAL, NO. 14 3C	FOOT	1319	1138	671	944	0	4072
87301245	ELECTRIC CABLE IN CONDUIT, SIGNAL, NO. 14 5C	FOOT	911	764	872	1513	0	4060
87301255	ELECTRIC CABLE IN CONDUIT, SIGNAL, NO. 14 7C	FOOT	1217	1284	618	1642	0	4761
87301900	ELECTRIC CABLE IN CONDUIT, EQUIPMENT GROUNDING CONDUCTOR, NO 6 1C	FOOT	468	333	350	511	0	1662
87502430	TRAFFIC SIGNAL POST, GALVANIZED STEEL, 9 FT	EACH	0	0	3	1	0	4
87502470	TRAFFIC SIGNAL POST, GALVANIZED STEEL, 13 FT	EACH	0	0	1	2	0	3
87700150	STEEL MAST ARM ASSEMBLY AND POLE 22 FT	EACH	0	0	1	0	0	1
87700160	STEEL MAST ARM ASSEMBLY AND POLE 24 FT	EACH	0	1	0	0	0	1
87702810	STEEL COMBINATION MAST ARM ASSEMBLY AND POLE 16 FT	EACH	0	0	1	0	0	1

	TABULATION OF SIGNAL QUANTITIES IL 40 (LOCUST ST)		LE FEVRE	MILLER RD	ST MARY RD	LYNN BLVD	INTER-CONNECT	
PAY CODE	**ITEM**	**UNIT**						**TOTAL**
87702880	STEEL COMBINATION MAST ARM ASSEMBLY AND POLE 30 FT	EACH	0	0	1	0	0	1
87702900	STEEL COMBINATION MAST ARM ASSEMBLY AND POLE 34 FT	EACH	0	1	1	0	0	2
87702920	STEEL COMBINATION MAST ARM ASSEMBLY AND POLE 38 FT	EACH	0	1	0	0	0	1
87702940	STEEL COMBINATION MAST ARM ASSEMBLY AND POLE 42 FT.	EACH	0	0	0	1	0	1
87702960	STEEL COMBINATION MAST ARM ASSEMBLY AND POLE 46 FT	EACH	0	0	0	2	0	2
87703000	STEEL COMBINATION MAST ARM ASSEMBLY AND POLE 50 FT	EACH	0	1	0	1	0	2
87800100	CONCRETE FOUNDATION, TYPE A	FOOT	0	0	12	9	0	21
87800200	CONCRETE FOUNDATION, TYPE D	FOOT	3	3	3	3	0	12
87800400	CONCRETE FOUNDATION, TYPE E, 30-INCH DIAMETER	FOOT	0	14	54	0	0	68
87800415	CONCRETE FOUNDATION, TYPE E, 36-INCH DIAMETER	FOOT	0	16	0	54	0	70
87900200	DRILL EXISTING HANDHOLE	EACH	3	0	0	0	0	3
88040090	SIGNAL HEAD, POLYCARBONATE, LED, 1-FACE, 3-SECTION, MAST ARM MOUNTED	EACH	0	5	6	6	0	17
88040150	SIGNAL HEAD, POLYCARBONATE, LED, 1-FACE, 5-SECTION, BRACKET MOUNTED	EACH	0	4	2	4	0	10
88040160	SIGNAL HEAD, POLYCARBONATE, LED, 1-FACE, 5-SECTION, MAST ARM MOUNTED	EACH	0	4	2	4	0	10

	PAY CODE	TABULATION OF SIGNAL QUANTITIES IL 40 (LOCUST ST) ITEM	UNIT	LE FEVRE	MILLER RD	ST MARY RD	LYNN BLVD	INTER-CONNECT	TOTAL
	88200100	TRAFFIC SIGNAL BACKPLATE	EACH	0	9	8	10	0	27
*	89500120	REMOVE EXISTING SERVICE INSTALLATION	EACH	0	0	0	0	0	0
*	89502375	REMOVE EXISTING TRAFFIC SIGNAL EQUIPMENT	L SUM	1	0	0	1	0	2
*	89502380	REMOVE EXISTING HANDHOLE	EACH	2	0	0	3	0	5
*	89502382	REMOVE EXISTING DOUBLE HANDHOLE	EACH	1	0	0	1	0	2
	89502385	REMOVE EXISTING CONCRETE FOUNDATION	EACH	1	0	0	5	0	6
*	X0321973	MODIFY EXISTING SERVICE INSTALLATION	EACH	1	0	0	1	0	2
*	X0322951	CABLE SPLICE SPECIAL	EACH	17	0	0	0	0	17
*	X1400278	REMOVE EXISTING LUMINAIRE	EACH	4	0	0	4	0	8
*	X8050115	SERVICE INSTALLATION, TYPE A (MODIFIED)	EACH	0	1	1	1	0	3
*	X8710030	FIBER OPTIC CABLE, 48 FIBERS SINGLE MODE	FOOT	0	0	0	0	3343	3343
*	X8760200	PEDESTRAIN PUSH-BUTTON POST	EACH	8	8	2	3	0	21
*	X8800101	PEDESTRIAN PUSH-BUTTON, SPECIAL	EACH	8	8	6	4	0	26
*	X8950105	REMOVE EXISTING TRAFFIC CONTROLLER AND CABINET	EACH	1	0	0	1	0	2
*	Z0033072	VIDEO VEHICLE DETECTION SYSTEM	EACH	1	1	1	1	0	4

IL 40 AT LE FEVRE TRAFFIC SIGNAL REMOVAL

89502375 REMOVE EXISTING TRAFFIC SIGNAL EQUIPMENT
2 - PEDESTRIAN PUSH BUTTON POST
8 - PEDESTRIAN PUSH BUTTONS
8 - PEDESTRIAN SIGNAL HEADS

89502380 REMOVE EXISTING HANDHOLE EACH 2
89502382 REMOVE EXISTING DOUBLE HANDHOLE EACH 1
89502385 REMOVE EXISTING CONCRETE FOUNDATION EACH 1
1- TYPE D FOUNDATION
X8950105 REMOVE EXSTING TRAFFIC CONTROLLER AND CABINET
X1400278 REMOVE EXISTING LUMINAIRE EACH 4

THE FOLLOWING REMOVED EQUIPMENT SHALL REMAIN THE PROPERTY OF THE CITY OF STERLING:
SIGNAL HEADS
LUMINAIRE FIXTURES
CONTROLLER AND CABINET

ALL OTHER SALVAGE EQUIPMENT SHALL REMAIN THE PROPERTY OF THE OF THE CONTRACTOR OR AS DIRECTED BY THE RESIDENT ENGINEER.

CABLE QUANTITIES REFLECT SPLICING WIRING AT MASTARM BASES.

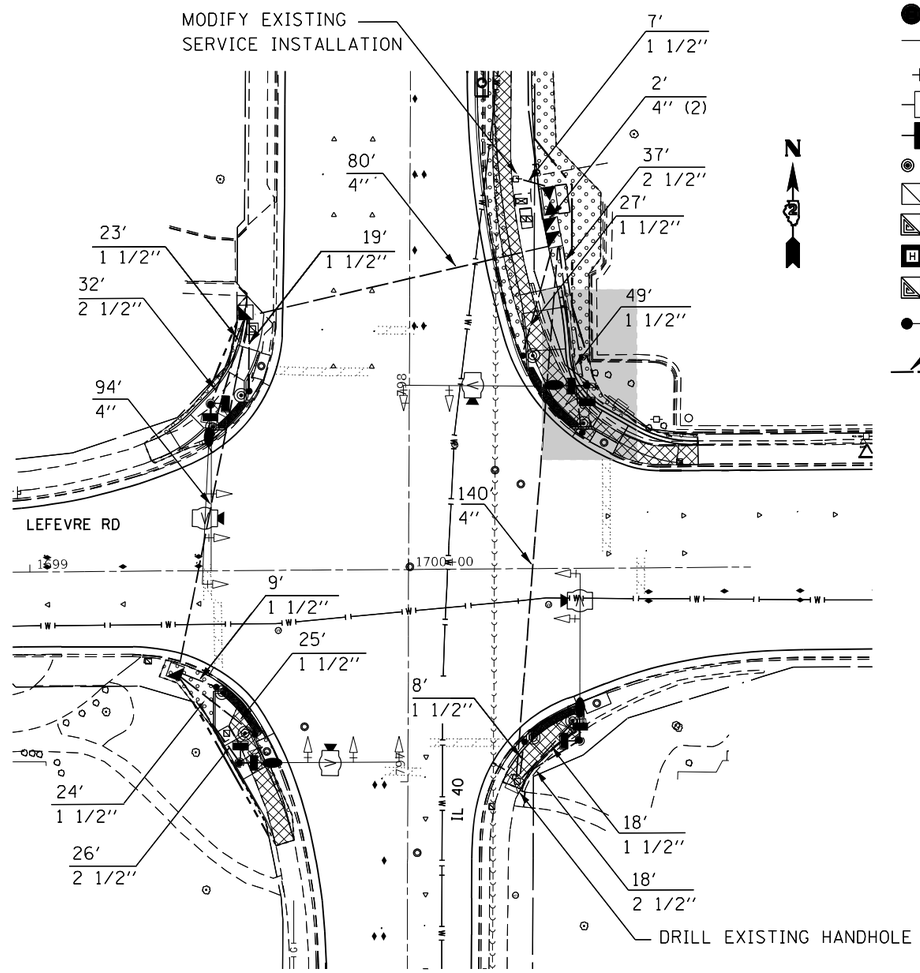

LEGEND

- EXISTING CONTROLLER
- NEW CONTROLLER
- EXISTING STEEL MAST ARM ASSEMBLY AND POLE
- NEW STEEL MAST ARM ASSEMBLY AND POLE
- EXISTING SIGNAL HEAD AND POST
- NEW SIGNAL HEAD AND POST
- EXISTING SIGNAL HEAD
- NEW SIGNAL HEAD WITH BACKPLATE
- EXISTING PEDESTRIAN HEAD
- NEW PEDESTRIAN HEAD
- PEDESTRIAN PUSHBUTTON
- EXISTING HANDHOLE
- NEW HANDHOLE
- NEW HEAVY-DUTY HANDHOLE
- NEW DOUBLE HANDHOLE
- NEW LUMINAIRE
- * CONDUIT — UNDERGROUND CONDUIT, COILABLE NONMETALLIC CONDUIT
  UPPER NUMERAL INDICATES LENGTH
  LOWER NUMERAL INDICATES CONDUIT SIZE

NOTE:
THE LUMINAIRES, LED ROADWAY DESIGNATION G ON THE EXISTING COMBINATION MAST ARM ASSEMBLY SHALL BE AT A 35′ HEIGHT ON A 12′ ARM.

NOTE:
MAST ARM MOUNTED STREET SIGN SHALL BE PROVIDED BY THE CITY OF STERLING AND MOUNTED IN ACCORDANCE WITH STATE STANDARD 720016 MAST ARM MOUNTED STREET NAME SIGN

MODEL: Default
FILE NAME: pw:\\ildot-pw.bentley.com:PWIDOT\Documents\IDOT Offices\District 2\Projects\64D78\Operations\TrafficSignal Sheets\D2_64D78-sht-ts.dgn

USER NAME = hogensonjd	DESIGNED -	REVISED -	
	DRAWN -	REVISED -	
PLOT SCALE = 40.0000 ' / in.	CHECKED -	REVISED -	
PLOT DATE = 10/22/2021	DATE -	REVISED -	

STATE OF ILLINOIS
DEPARTMENT OF TRANSPORTATION

IL 40 AT LE FEVRE
TRAFFIC SIGNALS

SCALE: | SHEET OF SHEETS | STA. TO STA.

F.A.P. RTE.	SECTION	COUNTY	TOTAL SHEETS	SHEET NO.
646	9R & 9RS-3	WHITESIDE	222	139
		CONTRACT NO. 64D78		
		ILLINOIS	FED. AID PROJECT	

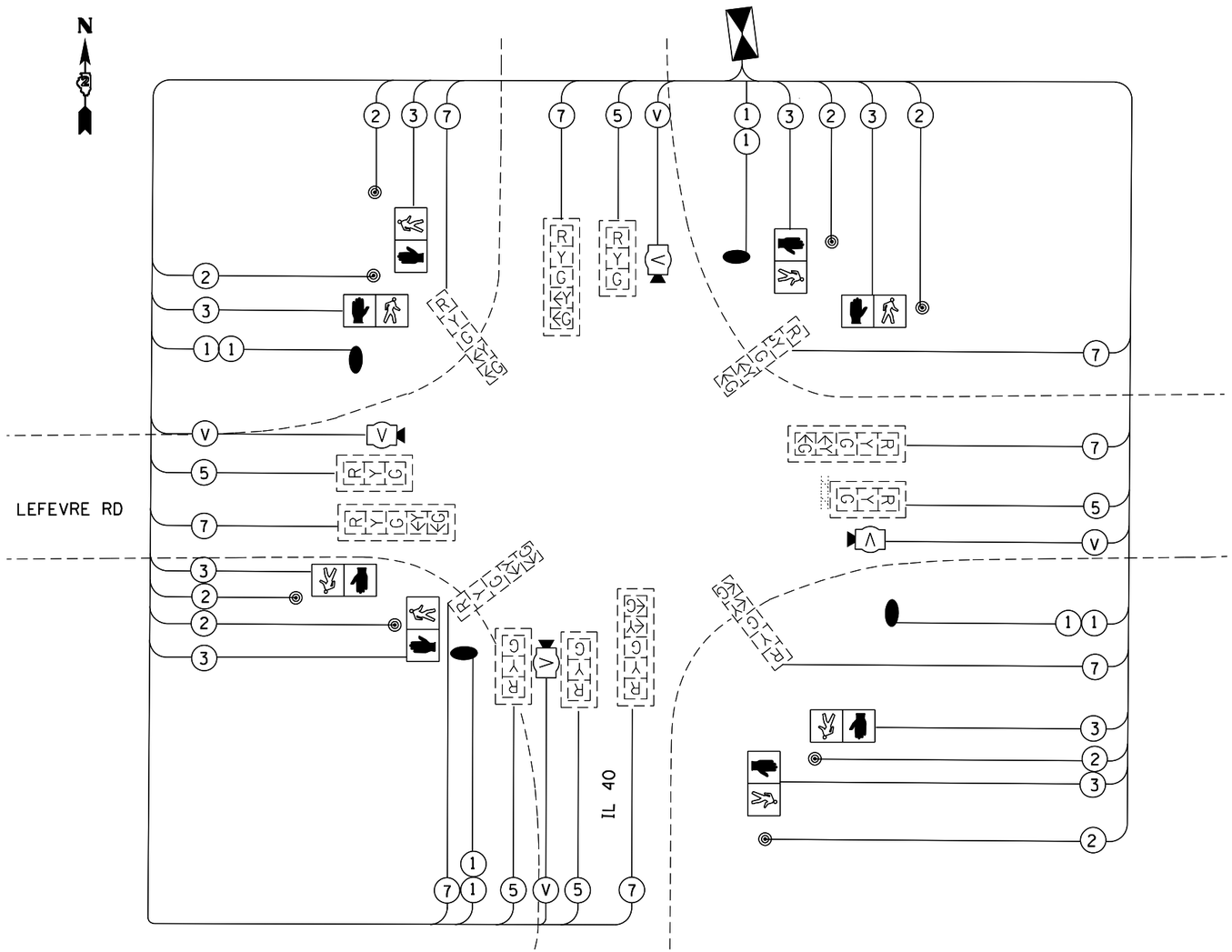

PHASE DESIGNATION DIAGRAM

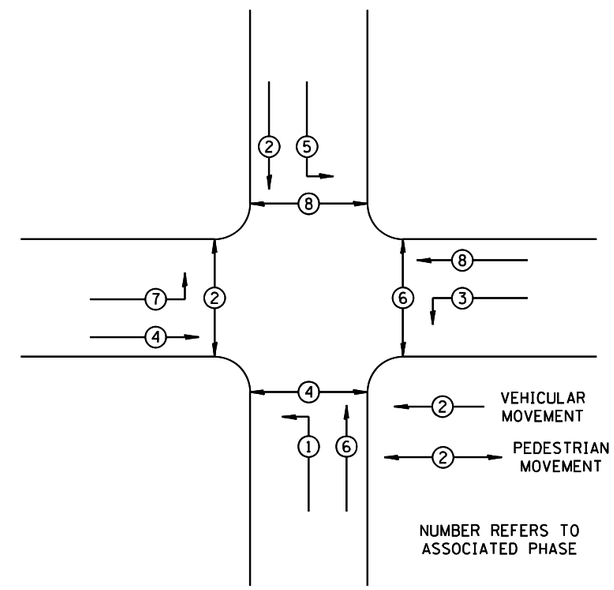

REFER TO STANDARD 857001

LEGEND

(2) INDICATES NUMBER OF NEW CONDUCTORS. ALL CABLE IS NO. 14 EXCEPT AS INDICATED. "P" INDICATES PAIR CABLE

R Y G — EXISTING LED SIGNAL HEAD WITH OR WITHOUT BACKPLATE

NEW PEDESTRIAN HEAD, LED WITH COUNTDOWN TIMER

PEDESTRIAN PUSHBUTTON

LUMINAIRE, LED ROADWAY, OUTPUT DESIGNATION G

MODEL: Default
FILE NAME: pw:\\ildot-pw.bentley.com:PWIDOT\Documents\IDOT Offices\District 2\Projects\64D78\Operations\Traffic Signal Sheets\D2_64D78-sht-ts.dgn

USER NAME = hogensonjd	DESIGNED -	REVISED -	STATE OF ILLINOIS DEPARTMENT OF TRANSPORTATION
	DRAWN -	REVISED -	
PLOT SCALE = 40.0000 ' / in.	CHECKED -	REVISED -	
PLOT DATE = 10/22/2021	DATE -	REVISED -	

IL 40 AT LE FEVRE
TRAFFIC SIGNALS CABLES

SCALE: | SHEET OF SHEETS | STA. TO STA.

F.A.P. RTE.	SECTION	COUNTY	TOTAL SHEETS	SHEET NO.
646	9R & 9RS-3	WHITESIDE	222	140
		CONTRACT NO. 64D78		
	ILLINOIS	FED. AID PROJECT		

LEGEND

- EXISTING CONTROLLER
- NEW CONTROLLER
- EXISTING STEEL MAST ARM ASSEMBLY AND POLE
- NEW STEEL MAST ARM ASSEMBLY AND POLE
- EXISTING SIGNAL HEAD AND POST
- NEW SIGNAL HEAD AND POST
- EXISTING SIGNAL HEAD
- NEW SIGNAL HEAD WITH BACKPLATE
- EXISTING PEDESTRIAN HEAD
- NEW PEDESTRIAN HEAD
- PEDESTRIAN PUSHBUTTON
- EXISTING HANDHOLE
- NEW HANDHOLE
- NEW HEAVY-DUTY HANDHOLE
- NEW DOUBLE HANDHOLE
- NEW LUMINAIRE
- * CONDUIT — UNDERGROUND CONDUIT, COILABLE NONMETALLIC CONDUIT
  - UPPER NUMERAL INDICATES LENGTH
  - LOWER NUMERAL INDICATES CONDUIT SIZE

NOTE:
THE LUMINAIRES, LED ROADWAY DESIGNATION G ON THE COMBINATION MAST ARM ASSEMBLY SHALL BE AT A 35′ HEIGHT ON A 12′ ARM.

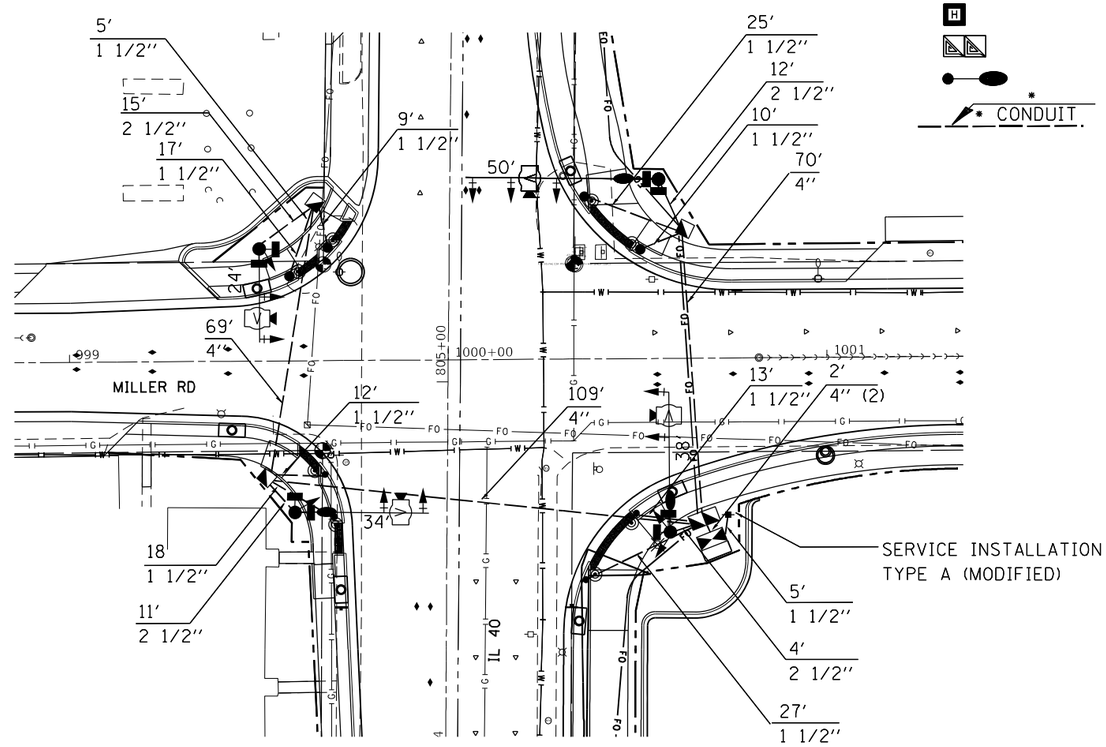

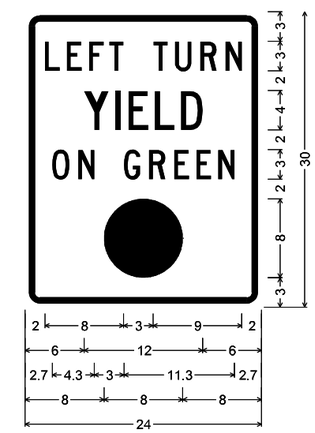

R10-12;
1.5" Radius, 0.6" Border, 0.4" Indent, Black on, White;
"LEFT TURN", C 146% spacing;
"YIELD", C 97% spacing;
"ON GREEN", C 145% spacing;

3 SIGNS AT
MILLER RD

NOTE:
MAST ARM MOUNTED STREET SIGN SHALL BE PROVIDED BY THE CITY OF STERLING AND MOUNTED IN ACCORDANCE WITH STATE STANDARD 720016 MAST ARM MOUNTED STREET NAME SIGN

IL 40 AT MILLER RD FOUNDATIONS

LENGTH	QUADRANT	DIAMETER (INCHES)	LENGTH (FEET)
24'	NW	30	12.5'
50'	NE	36	15.5'
34'	SW	30	14.0'
38'	SE	30	14.5'

THE SOILS AT THIS LOCATIONS REQUIRE LONGER THAN STANDARD FOUNDATION LENGTHS DUE TO SOFT SOILS BEING PRESENT

MODEL: Default
FILE NAME: pw:\\ildot-pw.bentley.com:PWIDOT\Documents\IDOT Offices\District 2\Projects\64D78\Operations\Traffic Signal Sheets\02_64D78-sht-3.dgn

USER NAME = hogensonjd	DESIGNED -	REVISED -	
	DRAWN -	REVISED -	
PLOT SCALE = 40.0000 ' / in.	CHECKED -	REVISED -	
PLOT DATE = 10/22/2021	DATE -	REVISED -	

STATE OF ILLINOIS
DEPARTMENT OF TRANSPORTATION

IL 40 AT MILLER RD
TRAFFIC SIGNALS

SCALE: SHEET OF SHEETS STA. TO STA.

F.A.P. RTE.	SECTION	COUNTY	TOTAL SHEETS	SHEET NO.
646	9R & 9RS-3	WHITESIDE	222	141
		CONTRACT NO. 64D78		
	ILLINOIS	FED. AID PROJECT		

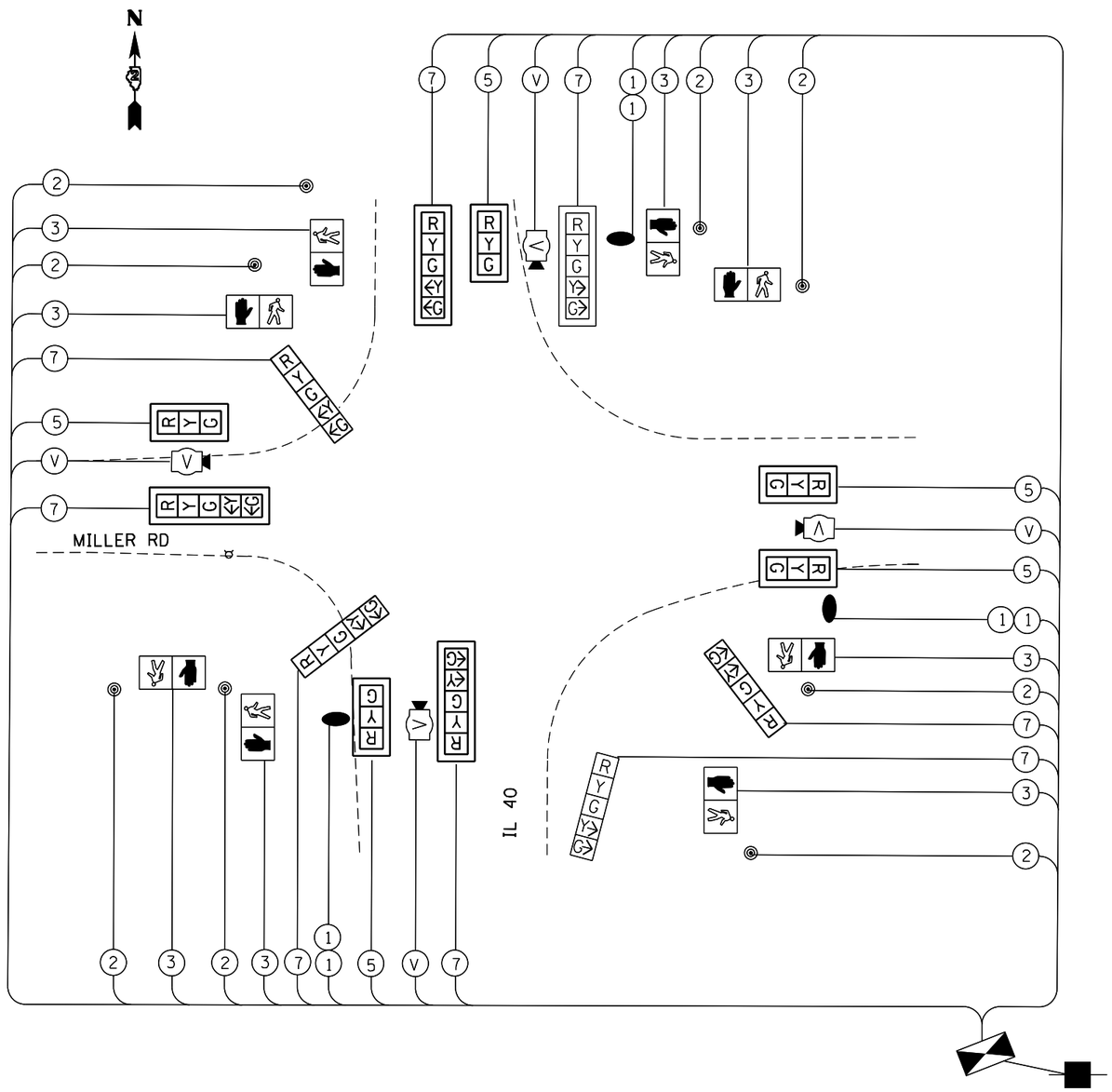

PHASE DESIGNATION DIAGRAM

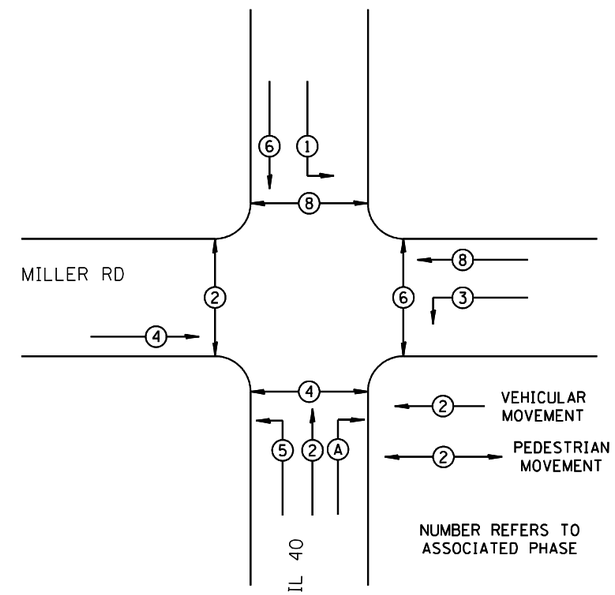

REFER TO STANDARD 857001

LEGEND

(2) INDICATES NUMBER OF NEW CONDUCTORS. ALL CABLE IS NO. 14 EXCEPT AS INDICATED. "P" INDICATES PAIR CABLE

R Y G — NEW LED SIGNAL HEAD WITH OR WITHOUT BACKPLATE

NEW PEDESTRIAN HEAD, LED WITH COUNTDOWN TIMER

PEDESTRIAN PUSHBUTTON

LUMINAIRE, LED ROADWAY, OUTPUT DESIGNATION G

MODEL: Default
FILE NAME: pw:\\ildot-pw.bentley.com:PWIDOT\Documents\IDOT Offices\District 2\Projects\64D78\Operations\Traffic Signal Sheets\D2_64D78-sht-ts.dgn

USER NAME = hogensonjd	DESIGNED -	REVISED -	
	DRAWN -	REVISED -	
PLOT SCALE = 40.0000 ' / in.	CHECKED -	REVISED -	
PLOT DATE = 10/22/2021	DATE -	REVISED -	

STATE OF ILLINOIS
DEPARTMENT OF TRANSPORTATION

IL 40 AT MILLER RD
TRAFFIC SIGNALS

SCALE: | SHEET OF SHEETS | STA. TO STA.

F.A.P. RTE.	SECTION	COUNTY	TOTAL SHEETS	SHEET NO.
646	9R & 9RS-3	WHITSIDE	222	142

CONTRACT NO. 64D78

ILLINOIS | FED. AID PROJECT

LEGEND

- EXISTING CONTROLLER
- NEW CONTROLLER
- EXISTING STEEL MAST ARM ASSEMBLY AND POLE
- NEW STEEL MAST ARM ASSEMBLY AND POLE
- EXISTING SIGNAL HEAD AND POST
- NEW SIGNAL HEAD AND POST
- EXISTING SIGNAL HEAD
- NEW SIGNAL HEAD WITH BACKPLATE
- EXISTING PEDESTRIAN HEAD
- NEW PEDESTRIAN HEAD
- PEDESTRIAN PUSHBUTTON
- EXISTING HANDHOLE
- NEW HANDHOLE
- NEW HEAVY-DUTY HANDHOLE
- NEW DOUBLE HANDHOLE
- NEW LUMINAIRE
- CONDUIT — UNDERGROUND CONDUIT, COILABLE NONMETALLIC CONDUIT
  UPPER NUMERAL INDICATES LENGTH
  LOWER NUMERAL INDICATES CONDUIT SIZE

NOTE:
THE LUMINAIRES, LED ROADWAY DESIGNATION G ON THE COMBINATION MAST ARM ASSEMBLY SHALL BE AT A 35' HEIGHT ON A 12' ARM.

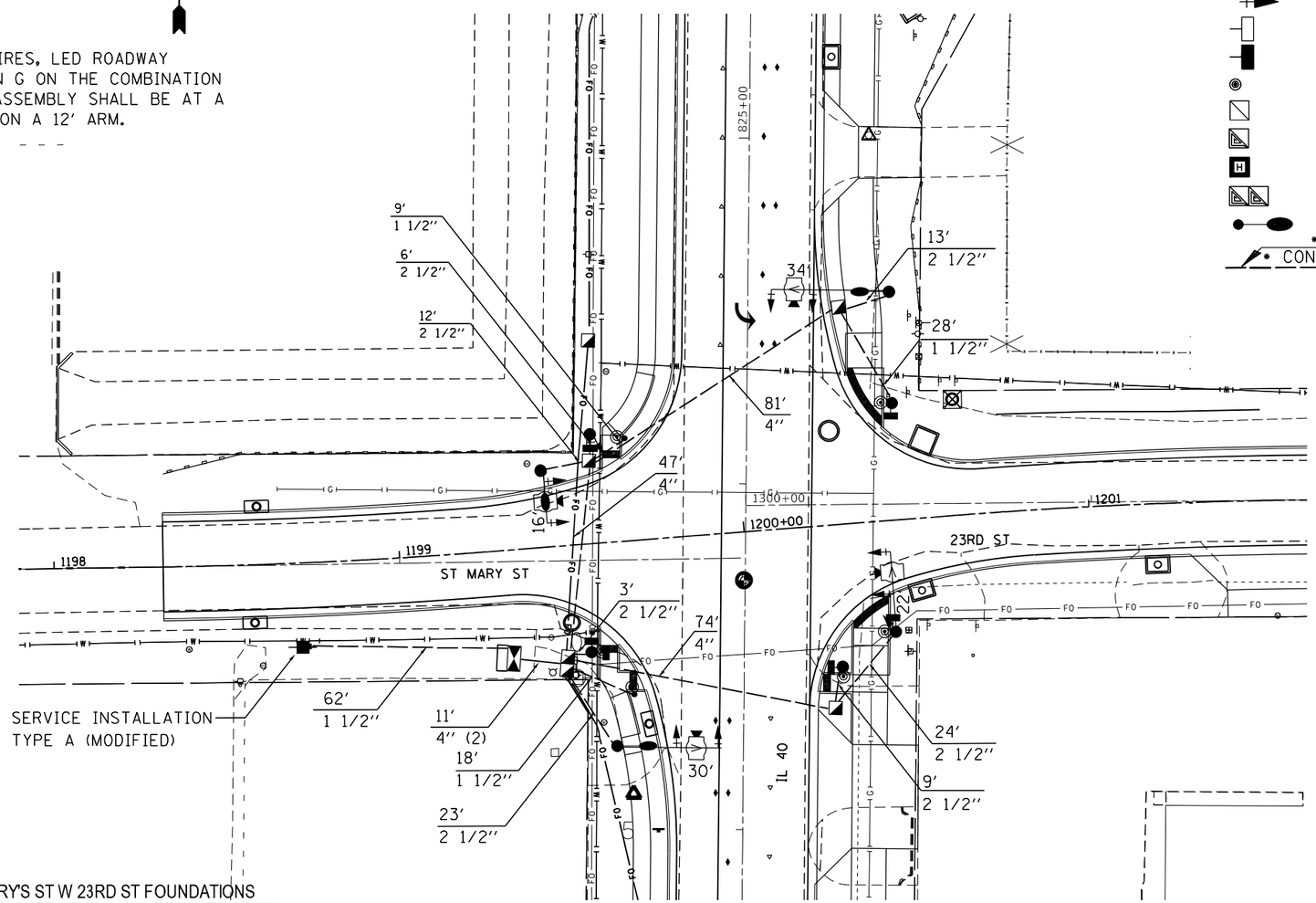

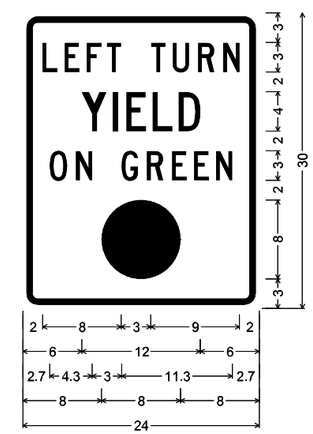

R10-12;
1.5" Radius, 0.6" Border, 0.4" Indent, Black on, White;
"LEFT TURN", C 146% spacing;
"YIELD", C 97% spacing;
"ON GREEN", C 145% spacing;

2 SIGNS AT
ST MARYST/23RD ST

NOTE:
MAST ARM MOUNTED STREET SIGN SHALL BE PROVIDED BY THE CITY OF STERLING AND MOUNTED IN ACCORDANCE WITH STATE STANDARD 720016 MAST ARM MOUNTED STREET NAME SIGN

IL 40 AT ST MARY'S ST W 23RD ST FOUNDATIONS

LENGTH	QUARDANT	DIAMETER (INCHES)	LENGTH (FEET)
16'	NW	30	13.0'
22'	NE	30	13.5'
30'	SW	30	13.5'
22'	SE	30	13.5'

THE SOILS AT THIS LOCATIONS REQUIRE LONGER THAN STANDARD FOUNDATION LENGTHS DUE TO SOFT SOILS BEING PRESENT

MODEL: Default
FILE NAME: pw:\\ildot-pw.bentley.com:PWIDOT\Documents\IDOT Offices\District 2\Projects\64D78\Operations\Traffic\Signal Sheets\D2_64D78-sht-ts.dgn

USER NAME = hogensonjd	DESIGNED -	REVISED -
	DRAWN -	REVISED -
PLOT SCALE = 40.0000 ' / in.	CHECKED -	REVISED -
PLOT DATE = 10/22/2021	DATE -	REVISED -

STATE OF ILLINOIS
DEPARTMENT OF TRANSPORTATION

IL 40 AT ST MARY RD
TRAFFIC SIGNALS

SCALE: SHEET OF SHEETS STA. TO STA.

F.A.P. RTE.	SECTION	COUNTY	TOTAL SHEETS	SHEET NO.
646	9R & 9RS-3	WHITSIDE	222	143
		CONTRACT NO. 64D78		
		ILLINOIS	FED. AID PROJECT	

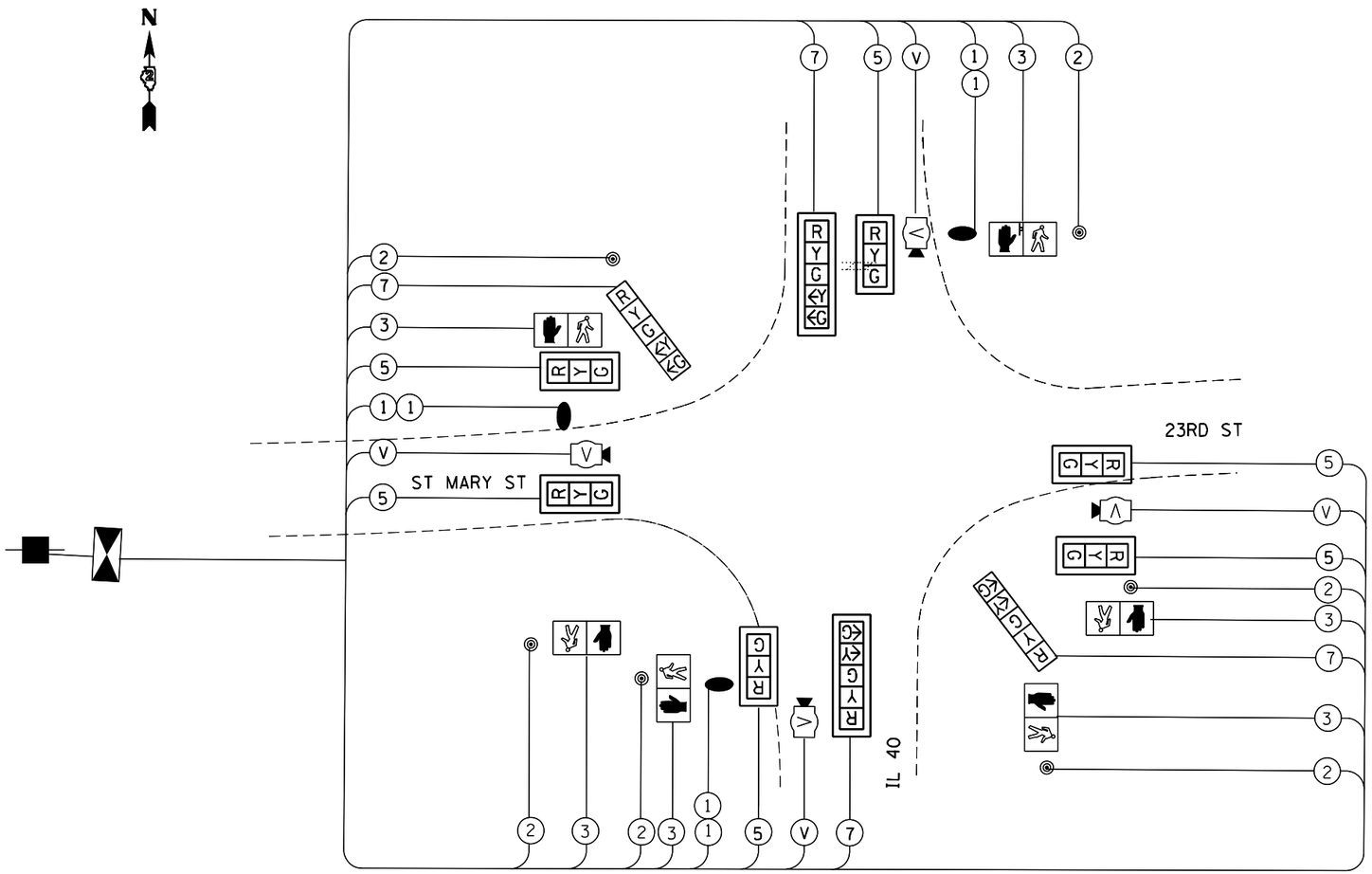

PHASE DESIGNATION DIAGRAM

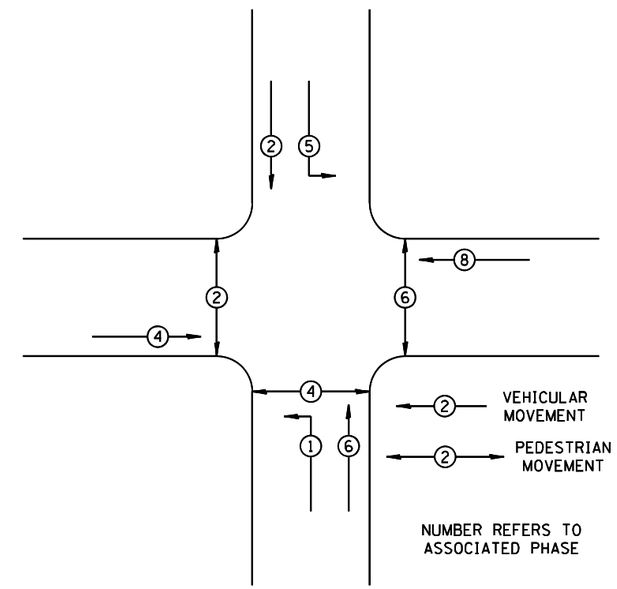

REFER TO STANDARD 857001

LEGEND

(2)	INDICATES NUMBER OF NEW CONDUCTORS. ALL CABLE IS NO. 14 EXCEPT AS INDICATED. "P" INDICATES PAIR CABLE
R Y G	NEW LED SIGNAL HEAD WITH OR WITHOUT BACKPLATE
	NEW PEDESTRIAN HEAD, LED WITH COUNTDOWN TIMER
	PEDESTRIAN PUSHBUTTON
	LUMINAIRE, LED ROADWAY, OUTPUT DESIGNATION G

MODEL: Default
FILE NAME: pw:\\ildot-pw.bentley.com:PWIDOT\Documents\IDOT Offices\District 2\Projects\64D78\Operations\Traffic\Signal Sheets\D2 64D78-sht-ts.dgn

USER NAME = hogensonjd	DESIGNED -	REVISED -	
	DRAWN -	REVISED -	
PLOT SCALE = 40.0000 ' / in.	CHECKED -	REVISED -	
PLOT DATE = 10/22/2021	DATE -	REVISED -	

STATE OF ILLINOIS
DEPARTMENT OF TRANSPORTATION

IL 40 AT ST MARY RD
TRAFFIC SIGNALS

SCALE: | SHEET OF SHEETS | STA. TO STA.

F.A.P. RTE.	SECTION	COUNTY	TOTAL SHEETS	SHEET NO.
646	9R & 9RS-3	WHITSIDE	222	144

CONTRACT NO. 64D78

ILLINOIS | FED. AID PROJECT

IL 40 AT LYNN BLVD SIGNAL REMOVAL

89502375 REMOVE EXISTING TRAFFIC SIGNAL EQUIPMENT
- 4 - COMBINATION MAST ARM ASSEMBLY 42', 48', 48' AND 52'
- 6 - 3 SECTION MAST ARM MOUNTED SIGNAL HEAD
- 4 - 5 SECTION BRACKET MOUNTED SIGNAL HEAD
- 4 - 5 SECTION MAST ARM MOUNTED SIGNAL HEAD

89502380 REMOVE EXISTING HANDHOLE EACH 3
89502382 REMOVE EXISTING DOUBLE HANDHOLE EACH 1
89502385 REMOVE EXISTING CONCRETE FOUNDATION EACH 5
- 4 - TYPE E
- 1 - TYPE D

X8950105 REMOVE EXISTING TRAFFIC CONTROLLER AND CABINET EACH 1

THE FOLLOWING REMOVED EQUIPMENT SHALL REMAIN THE PROPERTY OF THE CITY OF STERLING:
SIGNAL HEADS
LUMINAIRE FIXTURES
CONTROLLER

ALL OTHER SALVAGE EQUIPMENT SHALL REMAIN THE PROPERTY OF THE OF THE CONTRACTOR OR AS DIRECTED BY THE RESIDENT ENGINEER.

NOTE:
THE LUMINAIRES, LED ROADWAY DESIGNATION G ON THE COMBINATION MAST ARM ASSEMBLY SHALL BE AT A 35' HEIGHT ON A 12' ARM.

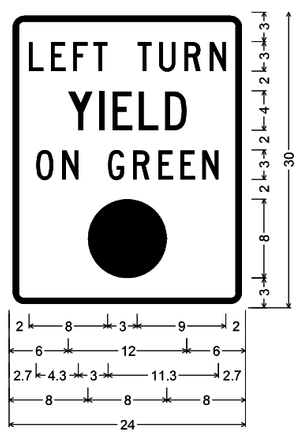

R10-12;
1.5" Radius, 0.6" Border, 0.4" Indent, Black on, White;
"LEFT TURN", C 146% spacing;
"YIELD", C 97% spacing;
"ON GREEN", C 145% spacing;

2 SIGNS AT
LYNN BLVD

NOTE:
MAST ARM MOUNTED STREET SIGN SHALL BE PROVIDED BY THE CITY OF STERLING AND MOUNTED IN ACCORDANCE WITH STATE STANDARD 720016 MAST ARM MOUNTED STREET NAME SIGN

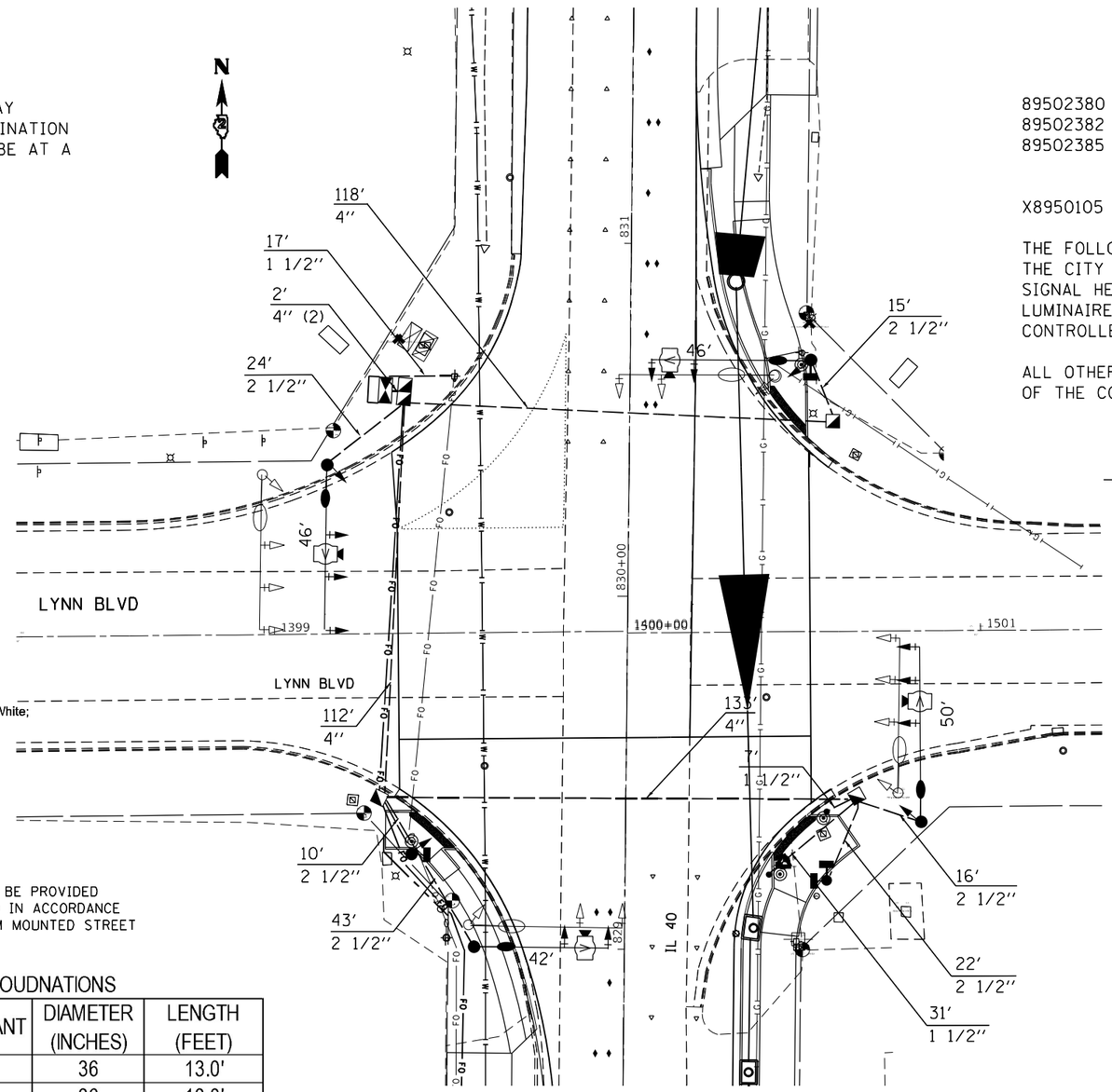

LEGEND

- EXISTING CONTROLLER
- NEW CONTROLLER
- EXISTING STEEL MAST ARM ASSEMBLY AND POLE
- NEW STEEL MAST ARM ASSEMBLY AND POLE
- EXISTING SIGNAL HEAD AND POST
- NEW SIGNAL HEAD AND POST
- EXISTING SIGNAL HEAD
- NEW SIGNAL HEAD WITH BACKPLATE
- EXISTING PEDESTRIAN HEAD
- NEW PEDESTRIAN HEAD
- PEDESTRIAN PUSHBUTTON
- EXISTING HANDHOLE
- NEW HANDHOLE
- NEW HEAVY-DUTY HANDHOLE
- NEW DOUBLE HANDHOLE
- (5'-2'') EXISTING CONDUIT (LENGTH AND SIZE)
- NEW LUMINAIRE
- * CONDUIT UNDERGROUND CONDUIT, COILABLE NONMETALLIC CONDUIT
- UPPER NUMERAL INDICATES LENGTH
- LOWER NUMERAL INDICATES CONDUIT SIZE

IL 40 AT LYNN BLVD FOUDNATIONS

LENGTH	QUADRANT	DIAMETER (INCHES)	LENGTH (FEET)
46	NW	36	13.0'
46	NE	36	13.0'
42	SW	36	13.0'
50	SE	36	15.0'

MODEL: Default
FILE NAME: pw:\\ildot-pw.bentley.com:PWIDOT\Documents\IDOT Offices\District 2\Projects\64D78\Operations\Traffic\Signal Sheets\D2_64D78-sht-ts.dgn

USER NAME = hogensonjd	DESIGNED -	REVISED -	
	DRAWN -	REVISED -	
PLOT SCALE = 40.0000 ' / in.	CHECKED -	REVISED -	
PLOT DATE = 10/22/2021	DATE -	REVISED -	

STATE OF ILLINOIS
DEPARTMENT OF TRANSPORTATION

IL 40 AT LYNN BLVD
TRAFFIC SIGNALS

SCALE: SHEET OF SHEETS STA. TO STA.

F.A.P. RTE.	SECTION	COUNTY	TOTAL SHEETS	SHEET NO.
646	9R & 9RS-3	WHITESIDE	222	145

CONTRACT NO. 64D78
ILLINOIS FED. AID PROJECT

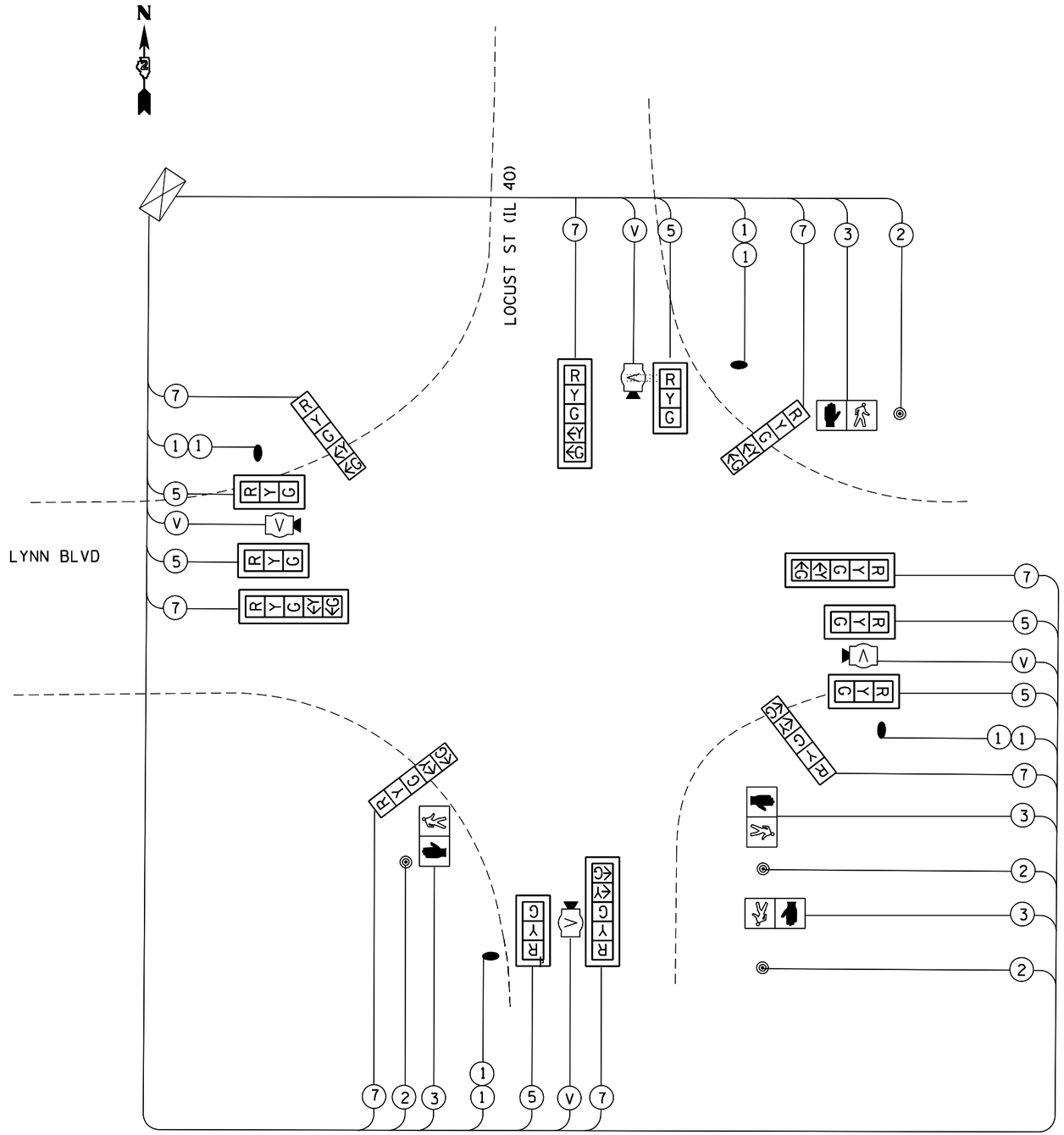

PHASE DESIGNATION DIAGRAM

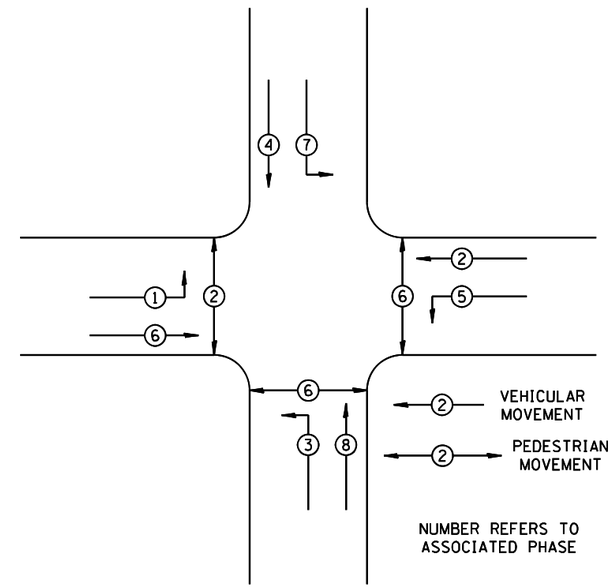

REFER TO STANDARD 857001

LEGEND

(2) INDICATES NUMBER OF NEW CONDUCTORS. ALL CABLE IS NO. 14 EXCEPT AS INDICATED. "P" INDICATES PAIR CABLE

R Y G — NEW LED SIGNAL HEAD WITH OR WITHOUT BACKPLATE

NEW PEDESTRIAN HEAD, LED WITH COUNTDOWN TIMER

PEDESTRIAN PUSHBUTTON

LUMINAIRE, LED ROADWAY, OUTPUT DESIGNATION G

MODEL: Default
FILE NAME: pw:\\ildot-pw.bentley.com:PWIDOT\Documents\IDOT Offices\District 2\Projects\64D78\Operations\Traffic\Signal Sheets\02_64D78-sht-ts.dgn

USER NAME = hogensonjd	DESIGNED -	REVISED -	
	DRAWN -	REVISED -	
PLOT SCALE = 40.0000 ' / in.	CHECKED -	REVISED -	
PLOT DATE = 10/22/2021	DATE -	REVISED -	

STATE OF ILLINOIS
DEPARTMENT OF TRANSPORTATION

IL 40 AT LYNN BLVD
TRAFFIC SIGNALS

SCALE: | SHEET OF SHEETS | STA. TO STA.

F.A.P. RTE.	SECTION	COUNTY	TOTAL SHEETS	SHEET NO.
646	9R & 9RS-3	WHITESIDE	222	146
		CONTRACT NO. 64D78		
	ILLINOIS	FED. AID PROJECT		

SERVICE AND CABINET DETAILS

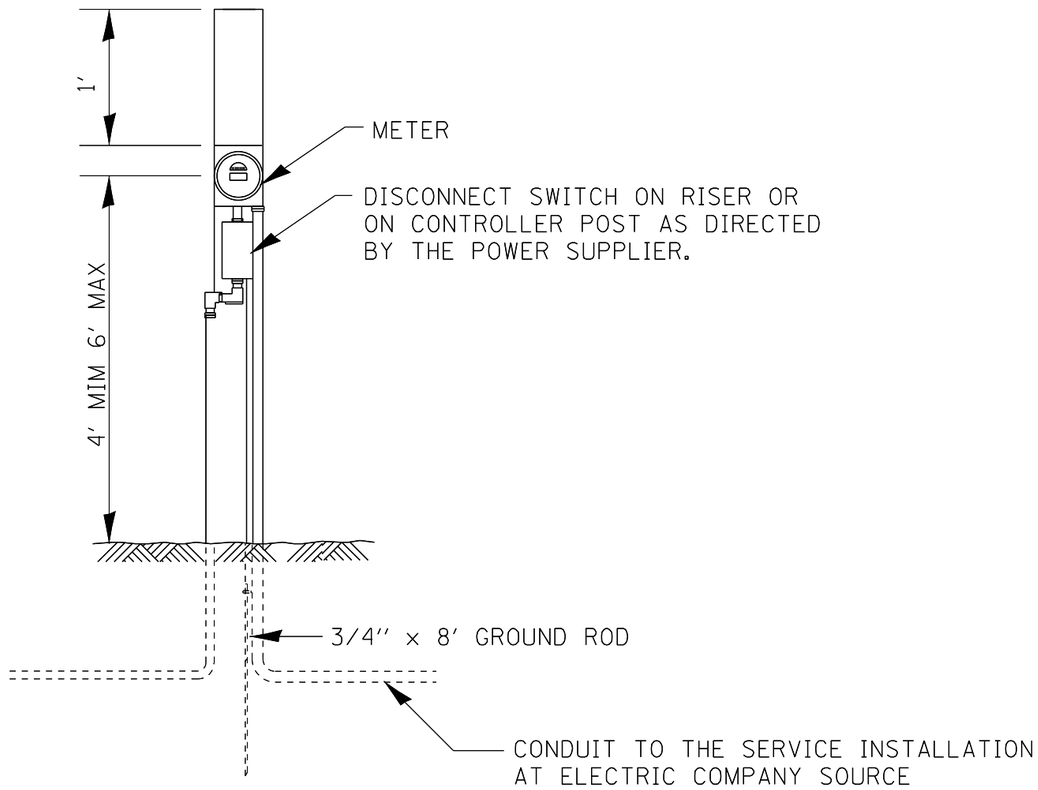

ELECTRIC SERVICE INSTALLATION, TYPE A
(SEE SPECIAL PROVISIONS)
(DETAIL ONLY SHOW GENERAL SERVICE
WHICH VARIES BY PROVIDERS)

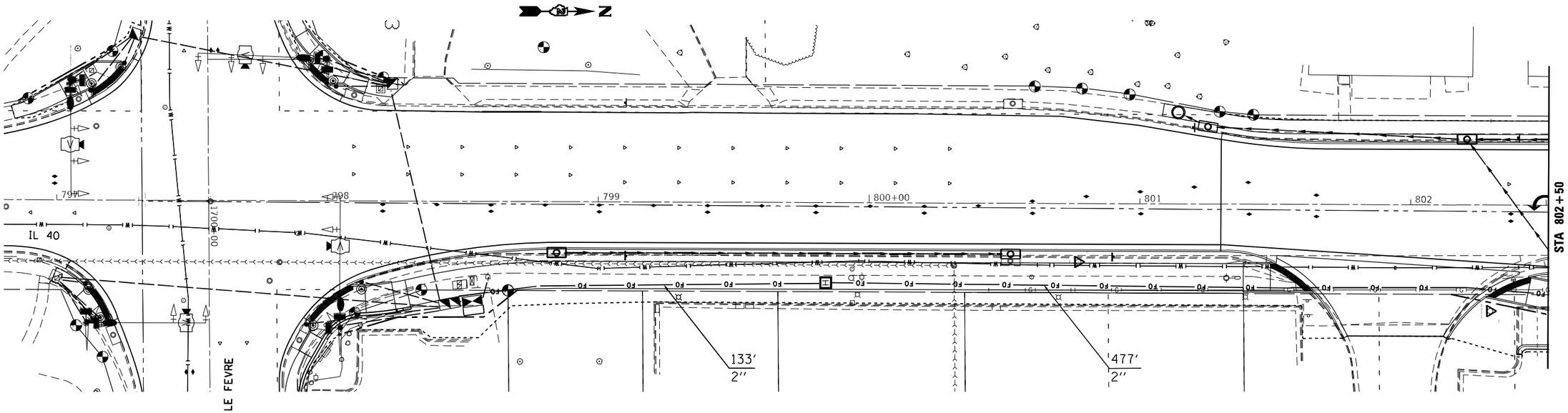

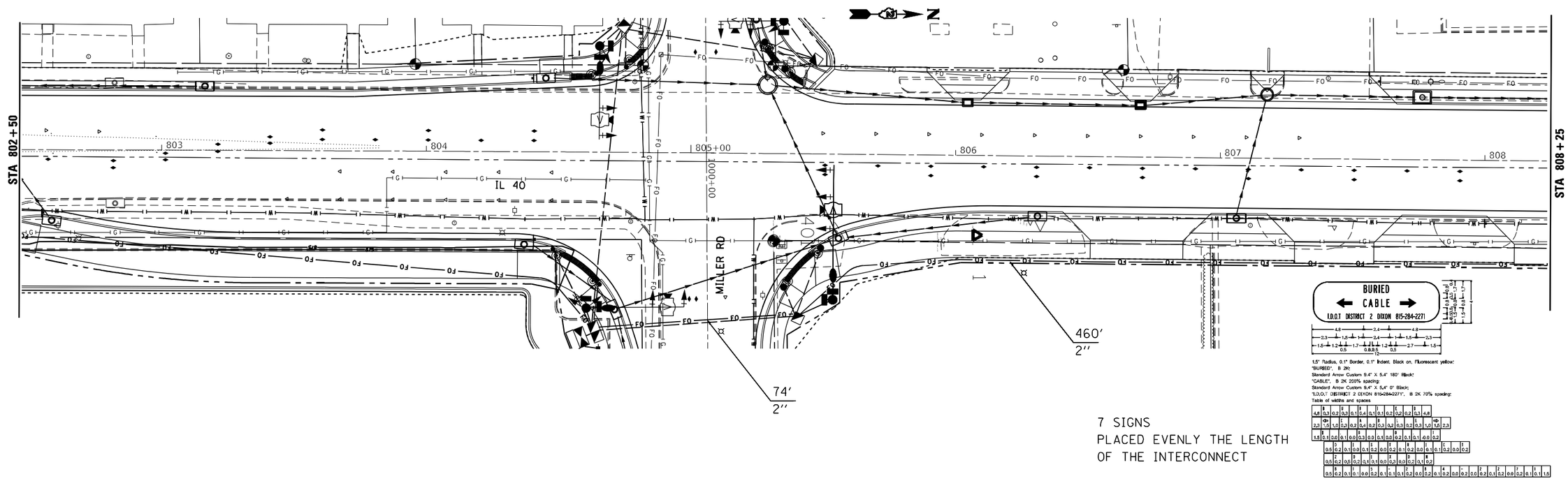

7 SIGNS
PLACED EVENLY THE LENGTH
OF THE INTERCONNECT

MODEL: Default
FILE NAME: pw:\\idot-pw.bentley.com:PWIDOT\Documents\IDOT Offices\District 2\Projects\64D78\Operations\Traffic\Signal Sheets\D2_64D78-sht-5.dgn

USER NAME = hogensonjd	DESIGNED -	REVISED -	STATE OF ILLINOIS DEPARTMENT OF TRANSPORTATION
	DRAWN -	REVISED -	
PLOT SCALE = 40.0000 ' / in.	CHECKED -	REVISED -	
PLOT DATE = 10/22/2021	DATE -	REVISED -	

SUMMARY OF QUANTITIES
TRAFFIC SIGNALS INTERCONNECT

SCALE: | SHEET OF SHEETS | STA. TO STA.

F.A.P. RTE.	SECTION	COUNTY	TOTAL SHEETS	SHEET NO.
646	9R & 9RS-3	WHITESIDE	222	148
		CONTRACT NO. 64D78		
		ILLINOIS	FED. AID PROJECT	

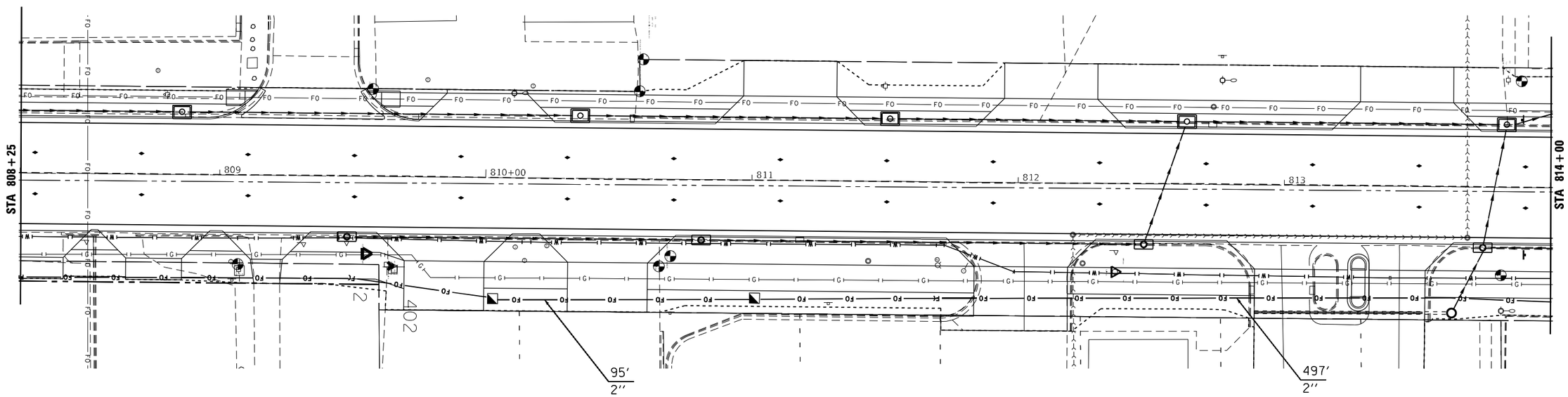

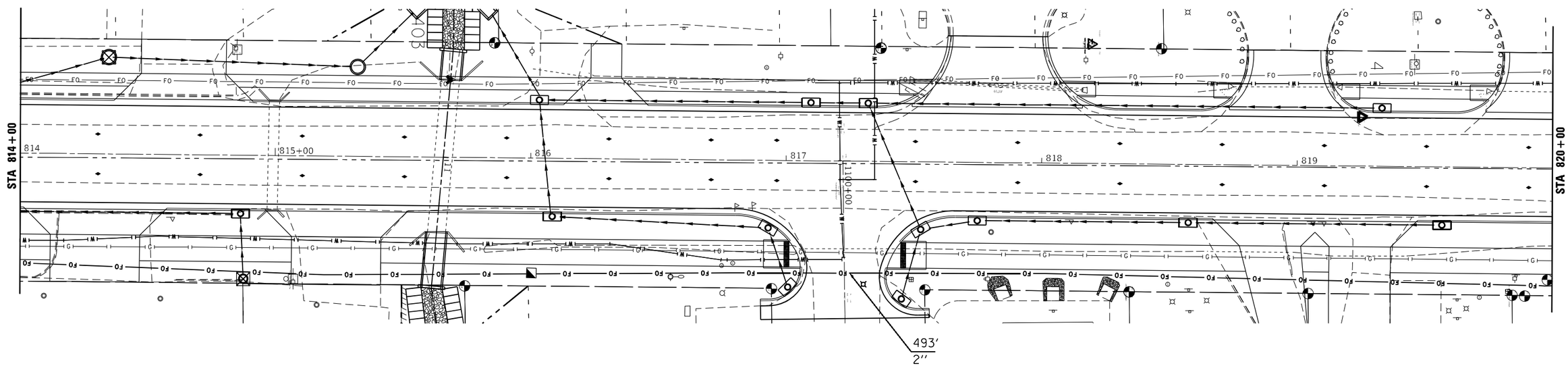

MODEL: Default
FILE NAME: pw:\\ildot-pw.bentley.com:PWIDOT\Documents\IDOT Offices\District 2\Projects\64D78\Operations\Traffic\Signal Sheets\D2_64D78-sht-5.dgn

USER NAME = hogensonjd	DESIGNED -	REVISED -	
	DRAWN -	REVISED -	
PLOT SCALE = 40.0000 ' / in.	CHECKED -	REVISED -	
PLOT DATE = 10/22/2021	DATE -	REVISED -	

STATE OF ILLINOIS
DEPARTMENT OF TRANSPORTATION

SUMMARY OF QUANTITIES
TRAFFIC SIGNALS INTERCONNECT

SCALE: | SHEET OF SHEETS | STA. TO STA.

F.A.P. RTE.	SECTION	COUNTY	TOTAL SHEETS	SHEET NO.
646	9R & 9RS-3	WHITESIDE	222	149
		CONTRACT NO. 64D78		
		ILLINOIS	FED. AID PROJECT	

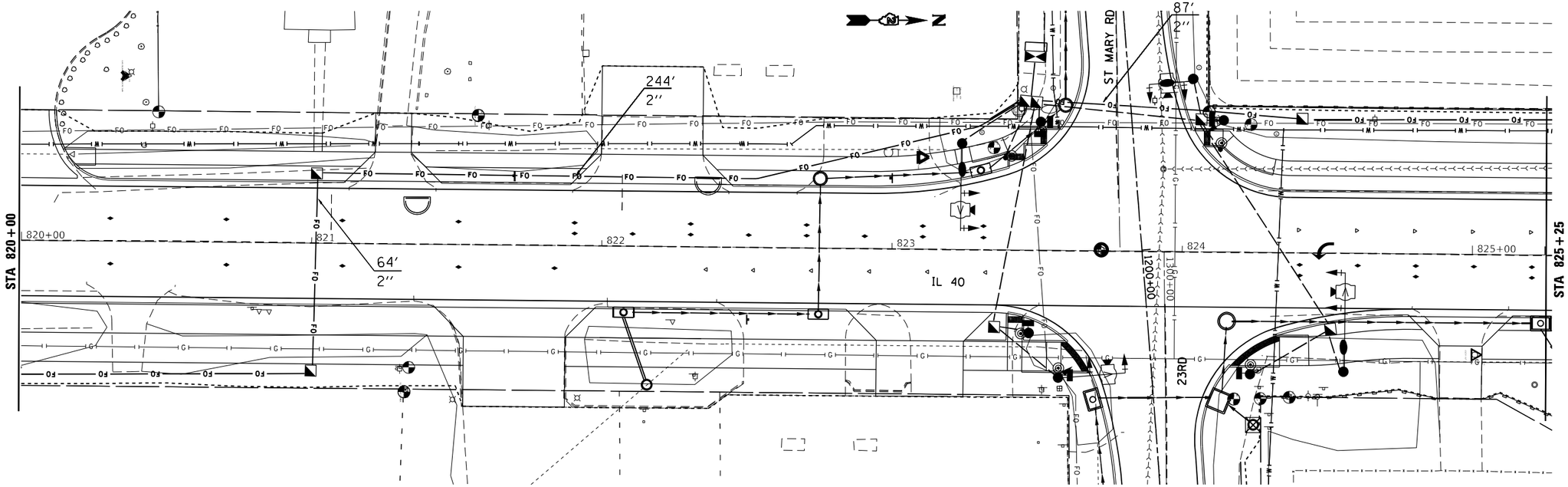

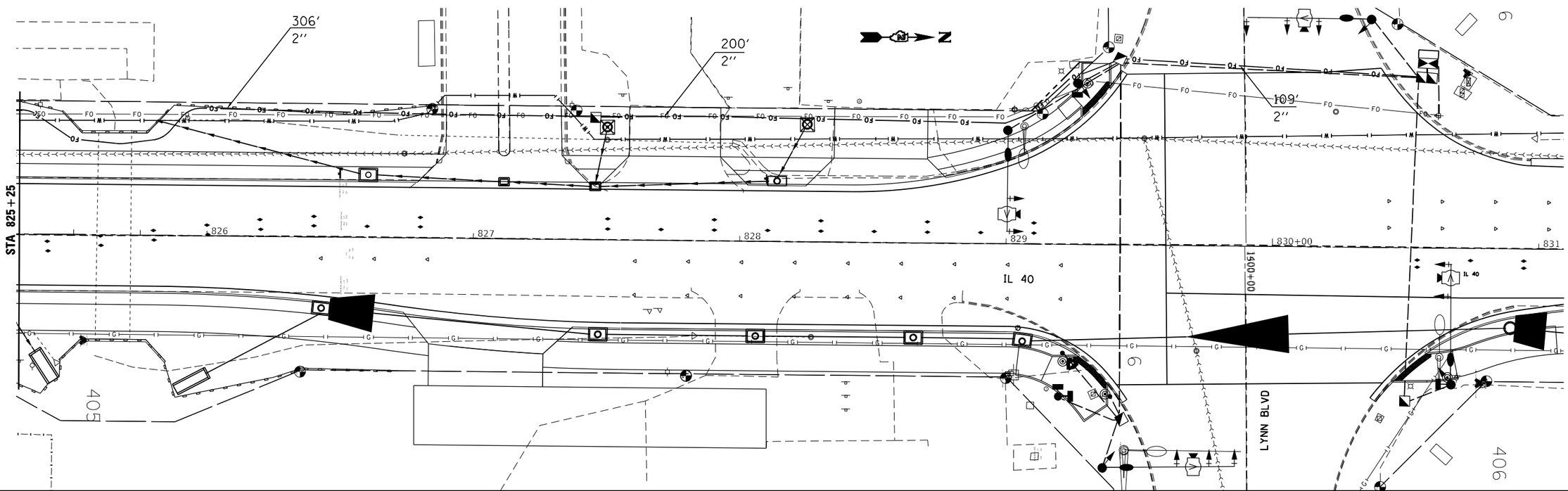

MODEL: Default
FILE NAME: pw:\\ildot-pw.bentley.com:PWIDOT\Documents\IDOT Offices\District 2\Projects\64D78\Operations\Traffic\Signal Sheets\D2_64D78-sht-ts.dgn

USER NAME = hogensonjd	DESIGNED -	REVISED -
	DRAWN -	REVISED -
PLOT SCALE = 40.0000 ' / in.	CHECKED -	REVISED -
PLOT DATE = 10/22/2021	DATE -	REVISED -

STATE OF ILLINOIS
DEPARTMENT OF TRANSPORTATION

SUMMARY OF QUANTITIES
TRAFFIC SIGNALS INTERCONNECT

SCALE: | SHEET OF SHEETS | STA. TO STA.

F.A.P. RTE.	SECTION	COUNTY	TOTAL SHEETS	SHEET NO.
646	9R & 9RS-3	WHITESIDE	222	150
		CONTRACT NO. 64D78		
		ILLINOIS	FED. AID PROJECT	

EROSION CONTROL

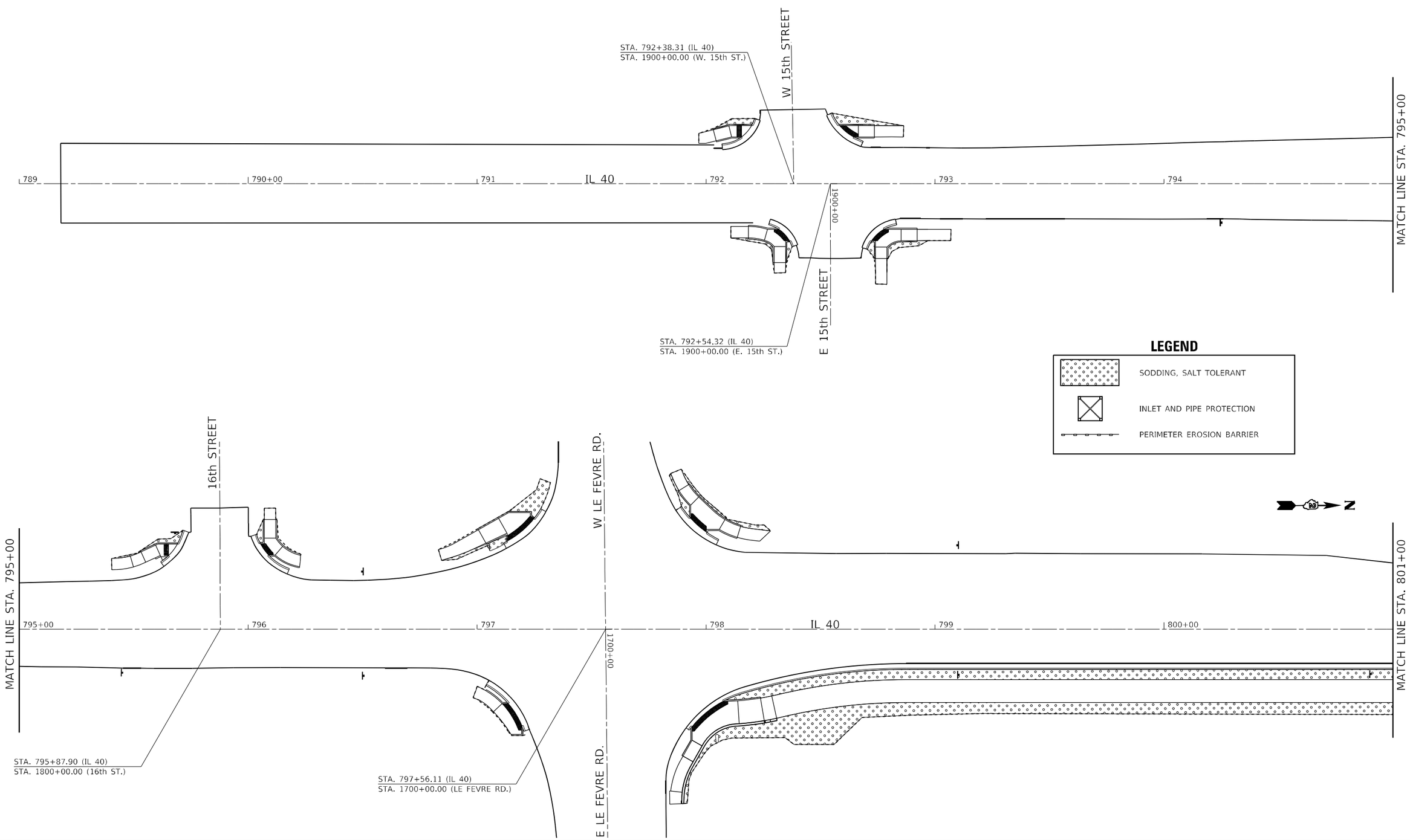

MODEL: Default
FILE NAME: pw:\\ildot-pw.bentley.com:PWIDOT\Documents\IDOT Offices\District 2\Projects\64D78\Program Development\Studies & Plans\Design\CADD\CADsheets\02_64D78-sh-landscaping.dgn

USER NAME = hogensonjd	DESIGNED -	REVISED -	
	DRAWN -	REVISED -	
PLOT SCALE = 40.0000 ' / in.	CHECKED -	REVISED -	
PLOT DATE = 10/22/2021	DATE -	REVISED -	

STATE OF ILLINOIS
DEPARTMENT OF TRANSPORTATION

EROSION CONTROL

SCALE: | SHEET OF SHEETS | STA. TO STA.

F.A.P. RTE.	SECTION	COUNTY	TOTAL SHEETS	SHEET NO.
646	9R & 9RS-3	WHITESIDE	222	151
		CONTRACT NO. 64D78		
		ILLINOIS	FED. AID PROJECT	

EROSION CONTROL

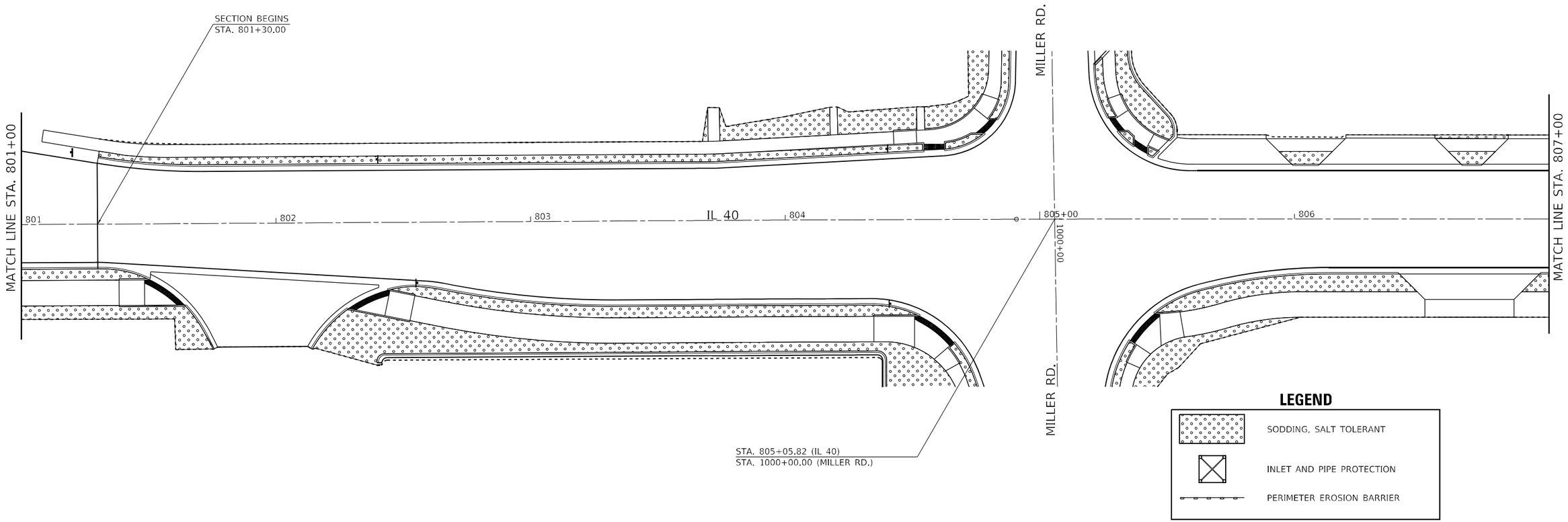

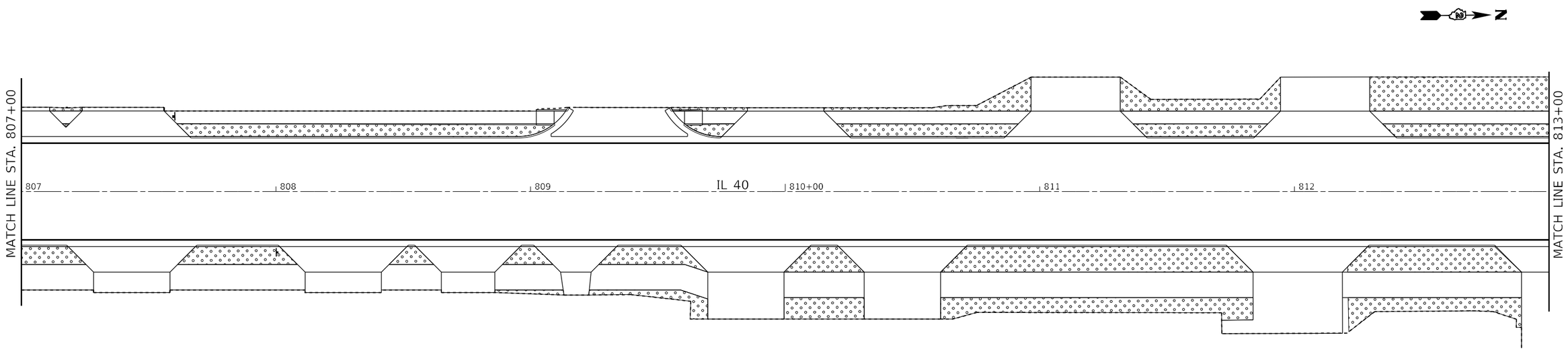

USER NAME = hogensonjd	DESIGNED -	REVISED -	
	DRAWN -	REVISED -	
PLOT SCALE = 40.0000 ' / in.	CHECKED -	REVISED -	
PLOT DATE = 10/22/2021	DATE -	REVISED -	

STATE OF ILLINOIS
DEPARTMENT OF TRANSPORTATION

EROSION CONTROL

SCALE: | SHEET OF SHEETS | STA. TO STA.

F.A.P. RTE.	SECTION	COUNTY	TOTAL SHEETS	SHEET NO.
646	9R & 9RS-3	WHITESIDE	222	152
		CONTRACT NO. 64D78		
	ILLINOIS	FED. AID PROJECT		

MODEL: Default
FILE NAME: pw:\\ildot-pw.bentley.com:PWIDOT\Documents\IDOT Offices\District 2\Projects\64D78\Program Development\Studies & Plans\Design\CADD\CADsheets\D2- 64D78-sht-landscaping.dgn

EROSION CONTROL

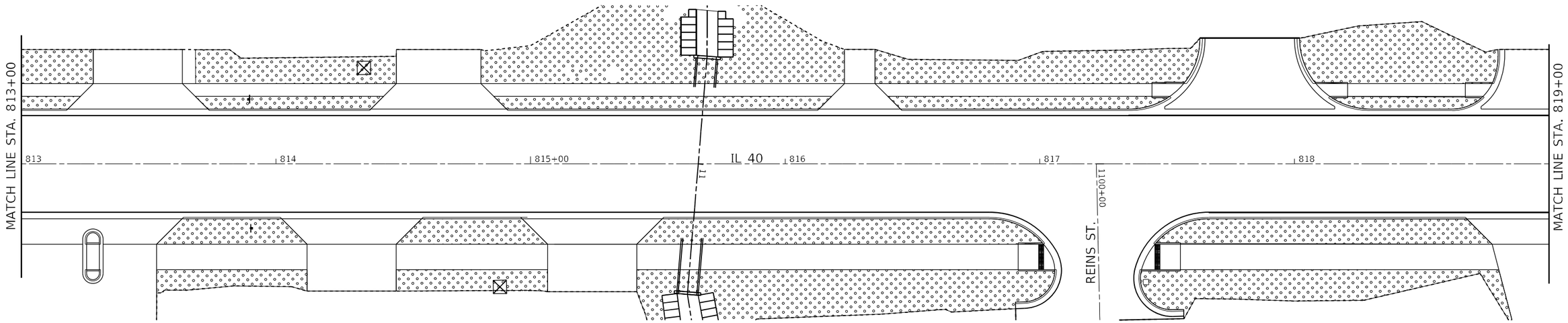

LEGEND

- SODDING, SALT TOLERANT
- INLET AND PIPE PROTECTION
- PERIMETER EROSION BARRIER

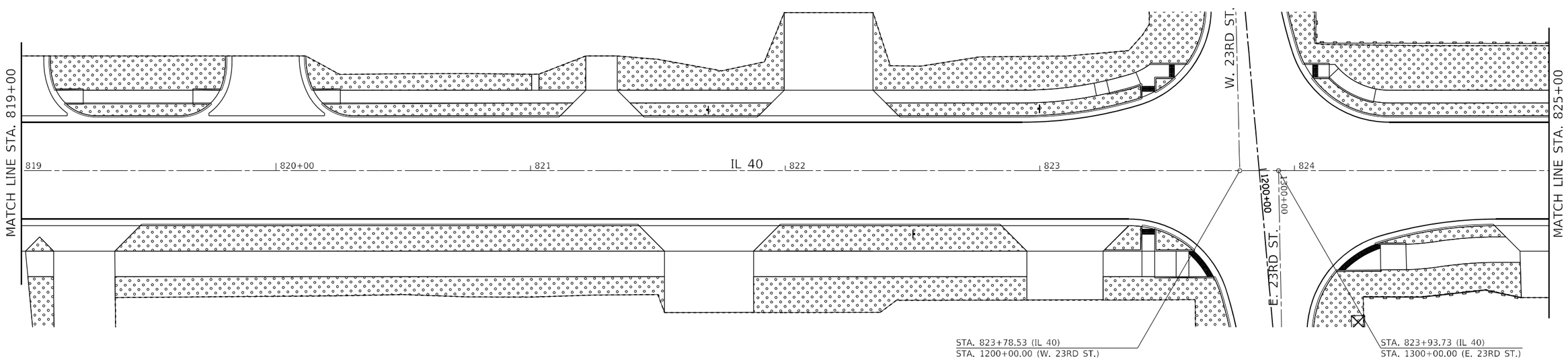

MODEL: Default
FILE NAME: pw:\\ildot-pw.bentley.com:PWIDOT\Documents\IDOT Offices\District 2\Projects\64D78\Program Development\Studies & Plans\Design\CADD\CADsheets\02_64D78-sn-landscaping.dgn

USER NAME = hagensonjd	DESIGNED -	REVISED -	
	DRAWN -	REVISED -	
PLOT SCALE = 40.0000 ' / in.	CHECKED -	REVISED -	
PLOT DATE = 10/22/2021	DATE -	REVISED -	

STATE OF ILLINOIS
DEPARTMENT OF TRANSPORTATION

EROSION CONTROL

SCALE: | SHEET OF SHEETS | STA. TO STA.

F.A.P. RTE.	SECTION	COUNTY	TOTAL SHEETS	SHEET NO.
646	9R & 9RS-3	WHITESIDE	222	153
		CONTRACT NO. 64D78		
		ILLINOIS	FED. AID PROJECT	

EROSION CONTROL

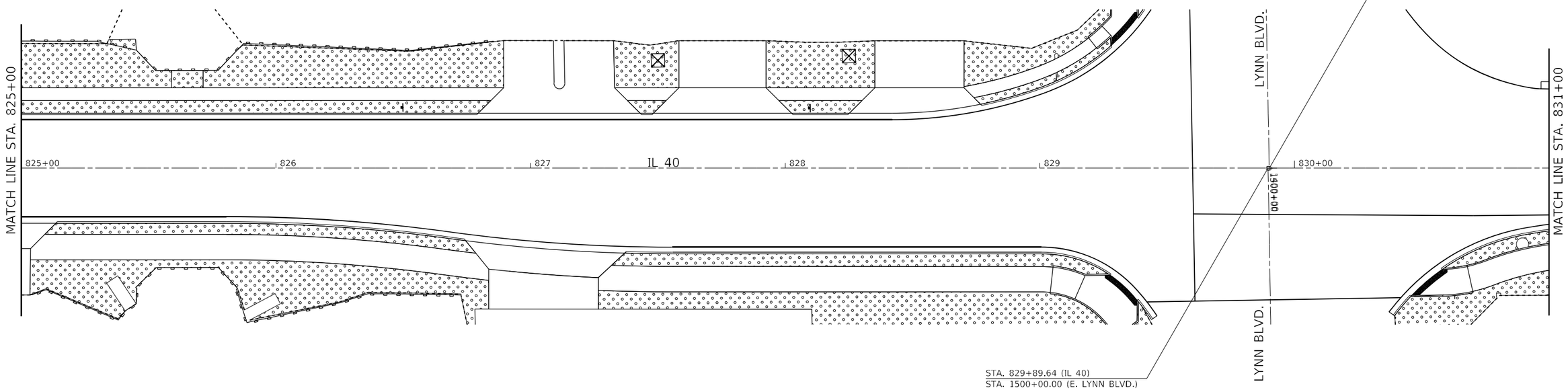

LEGEND

- SODDING, SALT TOLERANT
- INLET AND PIPE PROTECTION
- PERIMETER EROSION BARRIER

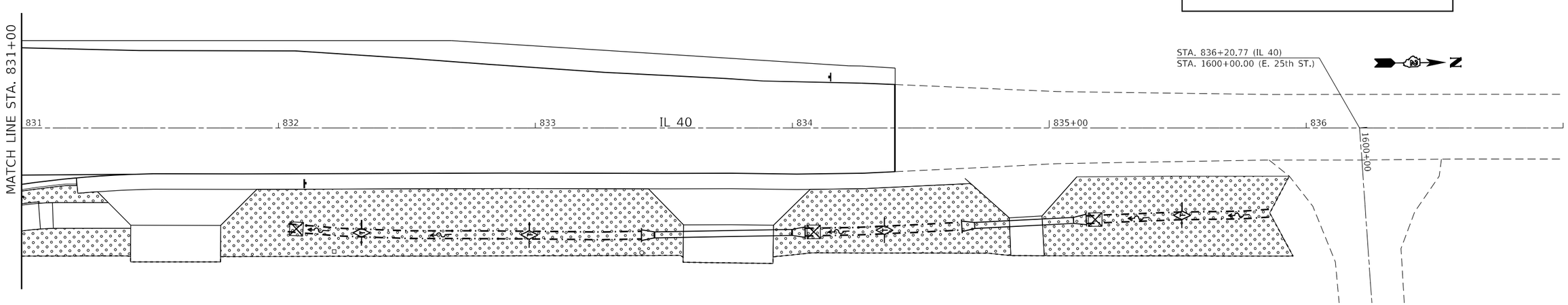

MODEL: Default
FILE NAME: pw:\\ildot-pw.bentley.com:PWIDOT\Documents\IDOT Offices\District 2\Projects\64D78\Program Development\Studies & Plans\Design\CADD\CADsheets\D2-64D78-sht-landscaping.dgn

USER NAME = hogensonjd	DESIGNED -	REVISED -	
	DRAWN -	REVISED -	
PLOT SCALE = 40.0000 ' / in.	CHECKED -	REVISED -	
PLOT DATE = 10/22/2021	DATE -	REVISED -	

STATE OF ILLINOIS
DEPARTMENT OF TRANSPORTATION

EROSION CONTROL

SCALE: | SHEET OF SHEETS | STA. TO STA.

F.A.P. RTE.	SECTION	COUNTY	TOTAL SHEETS	SHEET NO.
646	9R & 9RS-3	WHITESIDE	222	154
		CONTRACT NO. 64D78		
	ILLINOIS	FED. AID PROJECT		

EROSION CONTROL

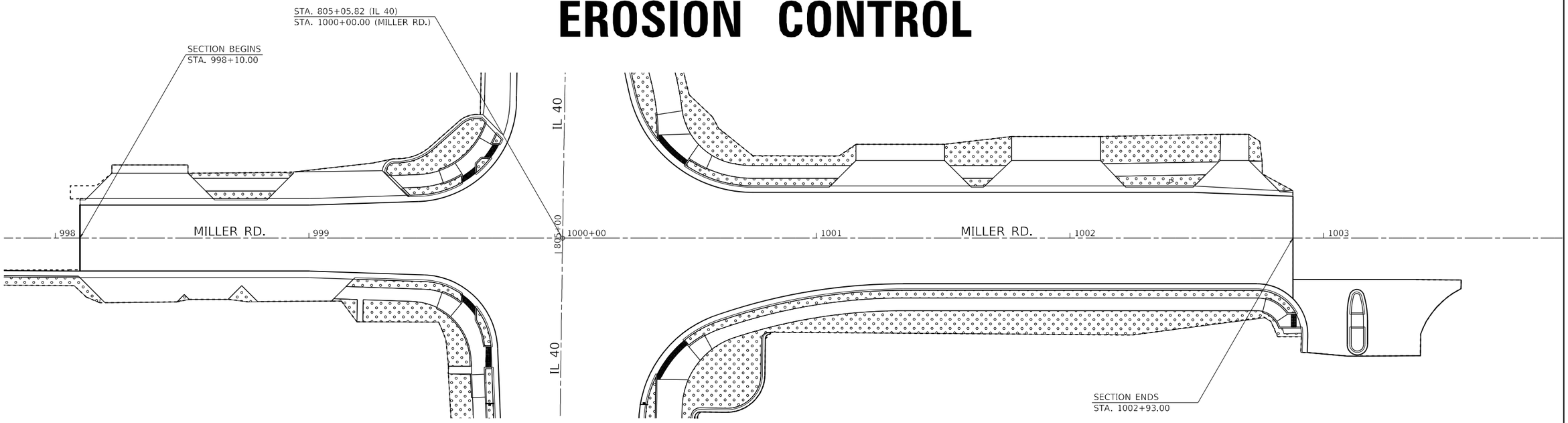

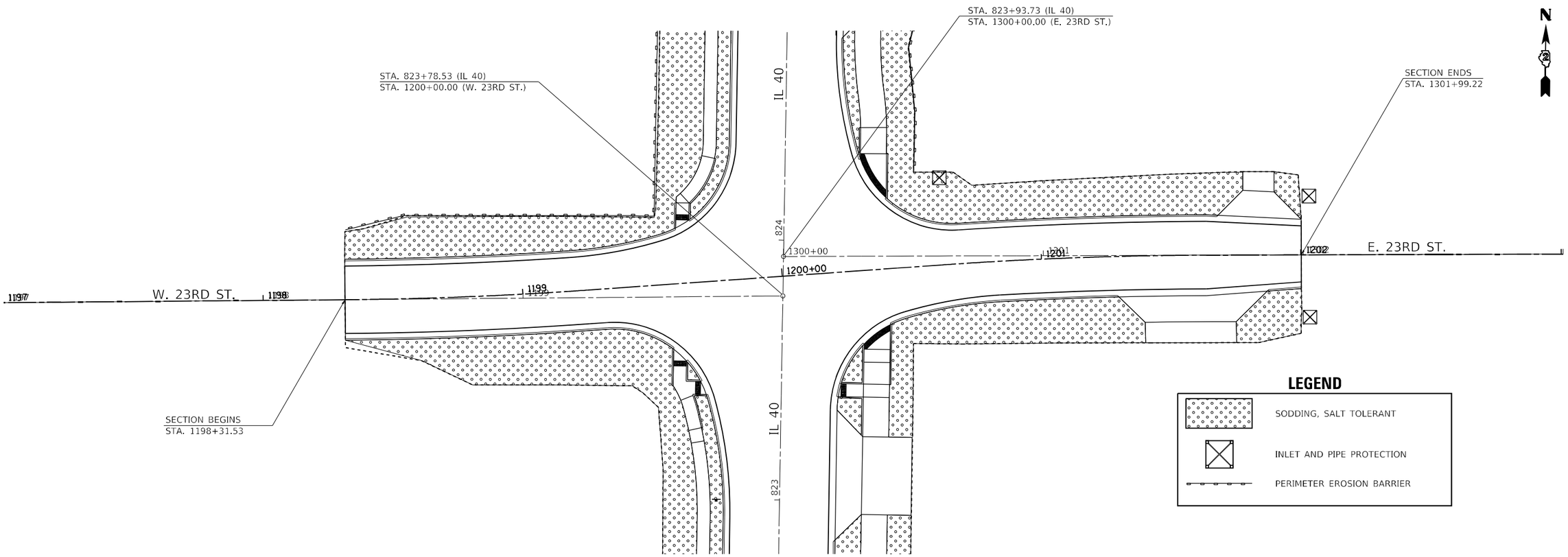

MODEL: Default
FILE NAME: pw:\\ildot-pw.bentley.com:PWIDOT\Documents\IDOT Offices\District 2\Projects\64D78\Program Development\Studies & Plans\Design\CADD\CADsheets\02-64D78-int-landscaping.dgn

USER NAME = hogensonjd	DESIGNED -	REVISED -	
	DRAWN -	REVISED -	
PLOT SCALE = 40.0000 ' / in.	CHECKED -	REVISED -	
PLOT DATE = 10/22/2021	DATE -	REVISED -	

STATE OF ILLINOIS
DEPARTMENT OF TRANSPORTATION

EROSION CONTROL

SCALE: | SHEET OF SHEETS | STA. TO STA.

F.A.P. RTE.	SECTION	COUNTY	TOTAL SHEETS	SHEET NO.
646	9R & 9RS-3	WHITESIDE	222	155
		CONTRACT NO. 64D78		
		ILLINOIS	FED. AID PROJECT	

BORING LOGS

Illinois Department of Transportation

Memorandum

To: Becky Marruffo — Attn: Brad Cushman

From: Dave von Kaenel — By: Amy Harms/Jan R. Twardowski

Subject: Structure Borings

Date: June 9, 2020

Route: IL 40
Section: 9TS + M-2
County: Whiteside
Job No.: P92-001-08
Description: Traffic signal foundations at Miller Road, St. Mary Street, and Lynn Boulevard

Attached are the boring logs for the mast arm foundations along IL 40 in Sterling.

The elevation datum was taken from the pavement crown at the center of the pavement, which has been arbitrarily assigned an elevation of 100.0. This datum should be converted to USGS datum, and calculations for structural design adjusted accordingly.

If you have any questions or require additional information, please contact Jan Twardowski at extension 45429 or Byron Wetzell at extension 45439.

JT06-08-20 1
Attachment
c: Consultant
Soils File

Illinois Department of Transportation
Division of Highways
IDOT

SOIL BORING LOG

Page 1 of 1

Date 5/20/20

ROUTE FAP 646 (IL 40) DESCRIPTION P92-001-08 - Traffic signals in Sterling @ Miller Rd / IL 40 LOGGED BY W. Garza

SECTION 9TS + M-2 LOCATION N 1/2 16, S 1/2 16, Sterling, SEC. , TWP. 21N, RNG. 7E

COUNTY Whiteside DRILLING METHOD Hollow Stem Auger HAMMER TYPE CME-45 Automatic

STRUCT. NO. NE Quad
Station

Latitude 41° 48' 13.52"
Longitude -89° 41' 54.89"

Northing 1,871,362.8465
Easting 2,424,201.5507

BORING NO. B-1
Station 805+50
Offset 38.00ft Rt of CL
Ground Surface Elev. 98.90 ft

Surface Water Elev. ft
Stream Bed Elev. ft

Groundwater Elev.:
First Encounter 86.9 ft
Upon Completion Dry ft
After ___ Hrs. ft

Description	Elev.	DEPTH (ft)	BLOWS (/6")	UCS Qu (tsf)	MOIST (%)
SOFT brown SILTY CLAY LOAM	96.90			0.3 P	32.0
SOFT gray SILTY CLAY LOAM	95.40		3 2 5	0.4 B	31.0
SOFT gray SILTY LOAM petroleum odor	92.90	-5	1 2 3	0.3 P	29.0
MEDIUM gray SANDY LOAM with sand lens	90.40		3 5 8	0.8 P	14.0
LOOSE light gray MOIST FINE SAND	87.90	-10	2 7 4		
STIFF tan SILTY CLAY LOAM TILL	85.40		3 4 7	1.7 B	13.0
HARD gray CLAY LOAM TILL	82.90	-15	5 7 11	5.0 B	11.0
HARD gray CLAY LOAM TILL	80.40		7 10 13	5.2 B	10.0
HARD gray CLAY LOAM TILL		-20	4		
HARD gray CLAY LOAM TILL *(continued)*	77.90		8 11	4.5 B	13.0
HARD gray CLAY LOAM TILL	75.40		6 7 13	5.2 B	15.0
VERY STIFF gray SILTY LOAM	72.90	-25	3 11 9	2.1 S	25.0
End of Boring		-30			
		-35			
		-40			

Northing and Easting were calculated using the ILHP-WF coordinate system

The Unconfined Compressive Strength (UCS) Failure Mode is indicated by (B-Bulge, S-Shear, P-Penetrometer)
The SPT (N value) is the sum of the last two blow values in each sampling zone (AASHTO T206)

BBS, from 137 (Rev. 8-99)

MODEL: Default
FILE NAME: pw:\\ildot-pw.bentley.com:PWIDOT\Documents\IDOT Offices\District 2\Projects\64D78\Program Development\Studies & Plans\Design\CADD\CADsheets\D2-64D78-sht-bldg.dgn

USER NAME = hogensonjd	DESIGNED -	REVISED -
	DRAWN -	REVISED -
PLOT SCALE = 100.0000 ' / in.	CHECKED -	REVISED -
PLOT DATE = 10/22/2021	DATE -	REVISED -

STATE OF ILLINOIS
DEPARTMENT OF TRANSPORTATION

BORING LOGS

SCALE: SHEET OF SHEETS STA. TO STA.

F.A.P. RTE.	SECTION	COUNTY	TOTAL SHEETS	SHEET NO.
646	9R & 9RS-3	WHITESIDE	222	156

CONTRACT NO. 64D78

ILLINOIS FED. AID PROJECT

BORING LOGS

Illinois Department of Transportation
Division of Highways
IDOT

SOIL BORING LOG

Page 1 of 1

Date 5/21/20

ROUTE FAP 646 (IL 40) DESCRIPTION P92-001-08 - Traffic signals in Sterling @ Miller Rd / IL 40 LOGGED BY W. Garza

SECTION 9TS + M-2 LOCATION N 1/2 16, S 1/2 16, Sterling, SEC. , TWP. 21N, RNG. 7E

COUNTY Whiteside DRILLING METHOD Hollow Stem Auger HAMMER TYPE CME-45 Automatic

STRUCT. NO. SW Quad
Station

Latitude 41° 48' 12.79"
Longitude -89° 41' 55.91"
Northing 1,871,288.8214
Easting 2,424,124.7946

BORING NO. B-2
Station 804+54
Offset 21.00ft Lt of CL
Ground Surface Elev. 99.80 ft

Surface Water Elev. ft
Stream Bed Elev. ft
Groundwater Elev.:
First Encounter ft
Upon Completion ft
After ___ Hrs. ft

Description	Elev.	DEPTH (ft)	BLOWS (/6")	UCS Qu (tsf)	MOIST (%)
25" Asphalt 7" Concrete	97.80				
MEDIUM gray SILTY CLAY LOAM	96.30		4 4 6	0.9 P	23.0
MEDIUM gray SILTY CLAY LOAM with SAND LENS	93.80	-5	2 3 4	0.5 P	25.0
MEDIUM gray SANDY LOAM	91.30		3 3 4	0.8 P	14.0
MEDUM gray SANDY LOAM TILL with SAND LENS	88.80	-10	3 4 5	0.8 P	15.0
VERY STIFF tan CLAY LOAM TILL	86.30		4 7 11	2.9 B	
HARD tan CLAY LOAM TILL	83.80	-15	7 11 13	4.7 B	13.0
HARD gray CLAY LOAM TILL	81.30		7 10 14	6.4 B	11.0
HARD gray CLAY LOAM TILL		-20	6		
HARD gray CLAY LOAM TILL (continued)	78.80	-25	10 12	4.7 B	11.0
End of Boring		-30			
		-35			
		-40			

Northing and Easting were calculated using the ILHP-WF coordinate system

The Unconfined Compressive Strength (UCS) Failure Mode is indicated by (B-Bulge, S-Shear, P-Penetrometer)
The SPT (N value) is the sum of the last two blow values in each sampling zone (AASHTO T206)

BBS, from 137 (Rev. 8-99)

Illinois Department of Transportation
Division of Highways
IDOT

SOIL BORING LOG

Page 1 of 1

Date 5/20/20

ROUTE FAP 646 (IL 40) DESCRIPTION P92-001-08 - Traffic signals in Sterling @ St. Marys Rd in Sterling LOGGED BY W. Garza

SECTION 9TS + M-2 LOCATION N 1/2 16, S 1/2 16, Sterling, SEC. , TWP. 21N, RNG. 7E

COUNTY Whiteside DRILLING METHOD Hollow Stem Auger HAMMER TYPE CME-45 Automatic

STRUCT. NO. NW Quad
Station

Latitude 41° 48' 32.39"
Longitude -89° 41' 55.47"
Northing 1,873,272.6922
Easting 2,424,146.9828

BORING NO. B-3
Station 824+50
Offset 27.00ft Lt of CL
Ground Surface Elev. 98.20 ft

Surface Water Elev. ft
Stream Bed Elev. ft
Groundwater Elev.:
First Encounter 91.2 ft ▼
Upon Completion 94.2 ft ▽
After ___ Hrs. ft

Description	Elev.	DEPTH (ft)	BLOWS (/6")	UCS Qu (tsf)	MOIST (%)
STIFF brown SILTY CLAY LOAM	96.20			1.1 P	15.0
HARD gray CLAY LOAM TILL	94.70		6 6 9	7.6 S	13.0
STIFF dark gray SILTY CLAY LOAM	92.20	-5	3 3 4	1.0 B	23.0
MEDIUM dark gray LOAM with SAND LENS	88.70		1 2 1	0.6 P	33.0
VERY LOOSE tan MEDIUM COARSE SAND	87.20	-10	1 1 1		
VERY LOOSE tan MEDIUM COARSE SAND	84.70		0 0 2		
STIFF gray SILTY CLAY LOAM TILL bottom 6"	82.20	-15	2 3 5	1.9 B	16.0
VERY STIFF gray SILTY CLAY LOAM TILL	79.70		3 4 7	2.3 B	18.0
		-20	3		
VERY STIFF gray SILTY CLAY LOAM TILL with SAND LENS (continued)	77.20		7 11	3.7 B	14.0
VERY STIFF gray SILTY LOAM with SAND LENS	74.70		5 5 5	2.1 S	17.0
LOOSE gray FINE SAND with CLAY LENS	72.20	-25	0 5 7		
End of Boring		-30			
		-35			
		-40			

Northing and Easting were calculated using the ILHP-WF coordinate system

The Unconfined Compressive Strength (UCS) Failure Mode is indicated by (B-Bulge, S-Shear, P-Penetrometer)
The SPT (N value) is the sum of the last two blow values in each sampling zone (AASHTO T206)

BBS, from 137 (Rev. 8-99)

BORING LOGS

Illinois Department of Transportation
Division of Highways
IDOT

SOIL BORING LOG

Page 1 of 1

Date 5/21/20

ROUTE FAP 646 (IL 40) DESCRIPTION P92-001-08 - Traffic signals in Sterling @ St. Marys Rd in Sterling LOGGED BY W. Garza

SECTION 9TS + M-2 LOCATION N 1/2 16, S 1/2 16, Sterling, SEC. , TWP. 21N, RNG. 7E

COUNTY Whiteside DRILLING METHOD Hollow Stem Auger HAMMER TYPE CME-45 Automatic

STRUCT. NO. SE Quad
Station

Latitude 41° 48' 31.59"
Longitude -89° 41' 54.24"

Northing 1,873,192.3090
Easting 2,424,240.9311

BORING NO. B-4
Station 823+74
Offset 55.00ft Rt of CL
Ground Surface Elev. 99.60 ft

Surface Water Elev. ft
Stream Bed Elev. ft

Groundwater Elev.:
First Encounter 92.6 ft ▼
Upon Completion ft
After ___ Hrs. ft

Description	Elev.	DEPTH (ft)	BLOWS (/6")	UCS Qu (tsf)	MOIST (%)
Shoulder Rock	97.60				
LOOSE tan SANDY GRAVEL	96.10		5 4 4		
LOOSE tan MOIST SANDY GRAVEL	93.60	-5	3 3 3		
VERY LOOSE tan SANDY GRAVEL	91.10		1 2 2		
VERY LOOSE tan FINE SAND	87.60	-10	1 1 2		
STIFF gray SILTY CLAY LOAM TILL	86.10		3 3 6	1.4 B	14.0
HARD gray SITLY CLAY LOAM TILL	83.60	-15	4 6 9	4.7 B	15.0
STIFF gray CLAY LOAM TILL	81.10		5 7 10	1.7 B	15.0
MEDIUM gray SILTY LOAM		-20	1		
MEDIUM gray SILTY LOAM (continued)	78.60		3 6	0.9 B	18.0
End of Boring		-25 -30 -35 -40			

Northing and Easting were calculated using the ILHP-WF coordinate system

The Unconfined Compressive Strength (UCS) Failure Mode is indicated by (B-Bulge, S-Shear, P-Penetrometer)
The SPT (N value) is the sum of the last two blow values in each sampling zone (AASHTO T206)

BBS, from 137 (Rev. 8-99)

Illinois Department of Transportation
Division of Highways
IDOT

SOIL BORING LOG

Page 1 of 1

Date 5/20/20

ROUTE FAP 646 (IL 40) DESCRIPTION P92-001-08 - Traffic signals in Sterling @ Lynn Boulevard in Sterling LOGGED BY W. Garza

SECTION 9TS + M-2 LOCATION N 1/2 16, S 1/2 16, Sterling, SEC. , TWP. 21N, RNG. 7E

COUNTY Whiteside DRILLING METHOD Solid Stem Auger HAMMER TYPE CME-45 Automatic

STRUCT. NO. SW Quad
Station

Latitude 41° 48' 36.60"
Longitude -89° 41' 55.32"

Northing 1,873,699.0793
Easting 2,424,155.8384

BORING NO. B-5
Station 828+85
Offset 30.00ft Lt of CL
Ground Surface Elev. 99.60 ft

Surface Water Elev. ft
Stream Bed Elev. ft

Groundwater Elev.:
First Encounter ft
Upon Completion ft
After ___ Hrs. ft

Description	Elev.	DEPTH (ft)	BLOWS (/6")	UCS Qu (tsf)	MOIST (%)
tan CA07	96.10				
MOIST SANDY GRAVEL	89.60	-5 -10			
MEDIUM gray SILTY LOAM	87.60			0.7 P	21.0
gray VERY MOIST FINE SAND	81.60	-15			
SOFT gray SILTY LOAM	79.60	-20		0.3 P	18.0
End of Boring					

Northing and Easting were calculated using the ILHP-WF coordinate system

The Unconfined Compressive Strength (UCS) Failure Mode is indicated by (B-Bulge, S-Shear, P-Penetrometer)
The SPT (N value) is the sum of the last two blow values in each sampling zone (AASHTO T206)

BBS, from 137 (Rev. 8-99)

MODEL: Default
FILE NAME: pw:\\ildot-pw.bentley.com:PWIDOT\Documents\IDOT Offices\District 2\Projects\64D78\Program Development\Studies & Plans\Design\CADD\CADsheets\D2-64D78-sht-blog.dgn

USER NAME = hogensonjd	DESIGNED -	REVISED -	
	DRAWN -	REVISED -	
PLOT SCALE = 100.0000 ' / in.	CHECKED -	REVISED -	
PLOT DATE = 10/22/2021	DATE -	REVISED -	

STATE OF ILLINOIS
DEPARTMENT OF TRANSPORTATION

BORING LOGS

SCALE: SHEET OF SHEETS STA. TO STA.

F.A.P. RTE.	SECTION	COUNTY	TOTAL SHEETS	SHEET NO.
646	9R & 9RS-3	WHITESIDE	222	158

CONTRACT NO. 64D78

ILLINOIS FED. AID PROJECT

BORING LOGS

Illinois Department of Transportation
Division of Highways
IDOT

SOIL BORING LOG

Page 1 of 1

Date 5/21/20

ROUTE FAP 646 (IL 40) DESCRIPTION P92-001-08 - Traffic signals in Sterling @ Lynn Boulevard in Sterling LOGGED BY W. Garza

SECTION 9TS + M-2 LOCATION N 1/2 16, S 1/2 16, Sterling, SEC. , TWP. 21N, RNG. 7E

COUNTY Whiteside DRILLING METHOD Hollow Stem Auger HAMMER TYPE CME-45 Automatic

STRUCT. NO. SE Quad
Station

Latitude 41° 48' 37.18" Northing 1,873,758.3136
Longitude -89° 41' 53.94" Easting 2,424,259.9288

BORING NO. B-6
Station 1500+77
Offset 54.00ft Rt of CL
Ground Surface Elev. 98.70 ft

Surface Water Elev. ft
Stream Bed Elev. ft

Groundwater Elev.:
First Encounter 89.2 ft ▼
Upon Completion 90.7 ft ▽
After ___ Hrs. ft

Description	Elev.	DEPTH (ft)	BLOWS (/6")	UCS Qu (tsf)	MOIST (%)
STIFF brown SILTY CLAY LOAM	96.70		3 4 7	1.0 P	30.0
MEDIUM tan SILTY CLAY LOAM	95.20	-5	2 2 4	0.7 B	27.0
MEDIUM tan SILTY LOAM with SAND LOAM	92.70		1 2 3	0.8 P	23.0
HARD tan CLAY LOAM TILL	90.20	-10	5 6 6	4.1 B	16.0
HARD gray CLAY LOAM TILL	87.70		5 8 11	5.4 B	14.0
VERY STIFF gray CLAY LOAM TILL	85.20	-15	5 8 11	3.3 B	14.0
STIFF gray CLAY LOAM TILL with SANDY GRAVEL	82.70		4 9 20	1.7 B	15.0
	80.20	-20	15		
MEDIUM gray SANDY LOAM TILL with SANDY GRAVEL LENS *(continued)*			7 10	0.8 P	11.0
HARD gray SHALE	76.70		12 16 25	6.7 S	15.0
DENSE gray SHALE	75.20	-25	26 16 29		13.0
End of Boring	72.70	-30			
		-35			
		-40			

Northing and Easting were calculated using the ILHP-WF coordinate system

The Unconfined Compressive Strength (UCS) Failure Mode is indicated by (B-Bulge, S-Shear, P-Penetrometer)
The SPT (N value) is the sum of the last two blow values in each sampling zone (AASHTO T206)

BBS, from 137 (Rev. 8-99)

MODEL: Default
FILE NAME: pw:\\ildot-pw.bentley.com:PWIDOT\Documents\IDOT Offices\District 2\Projects\64D78\Program Development\Studies & Plans\Design\CADD\CADsheets\D2_64D78-sht-bbs.dgn

USER NAME = hogensonjd	DESIGNED -	REVISED -	
	DRAWN -	REVISED -	
PLOT SCALE = 100.0000 ' / in.	CHECKED -	REVISED -	
PLOT DATE = 10/22/2021	DATE -	REVISED -	

STATE OF ILLINOIS
DEPARTMENT OF TRANSPORTATION

BORING LOGS

SCALE: SHEET OF SHEETS STA. TO STA.

F.A.P. RTE.	SECTION	COUNTY	TOTAL SHEETS	SHEET NO.
646	9R & 9RS-3	WHITESIDE	222	159

CONTRACT NO. 64D78

ILLINOIS FED. AID PROJECT

VANE DRAIN

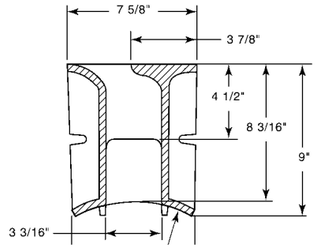

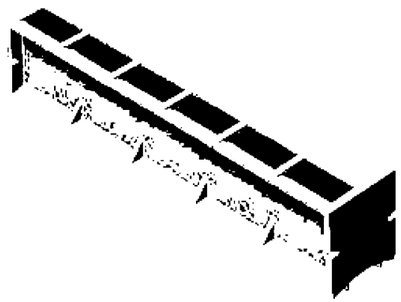

Illustrating R-3599-B

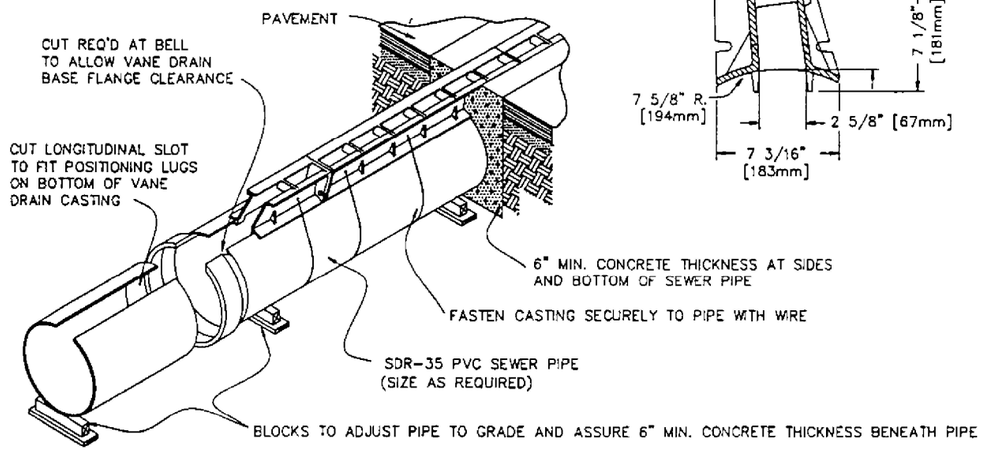

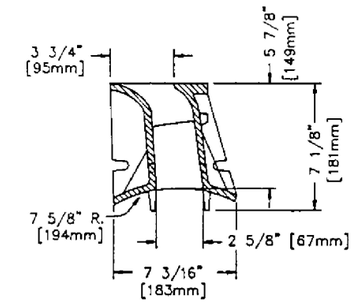

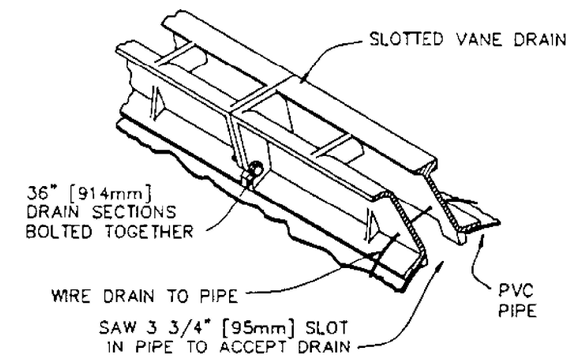

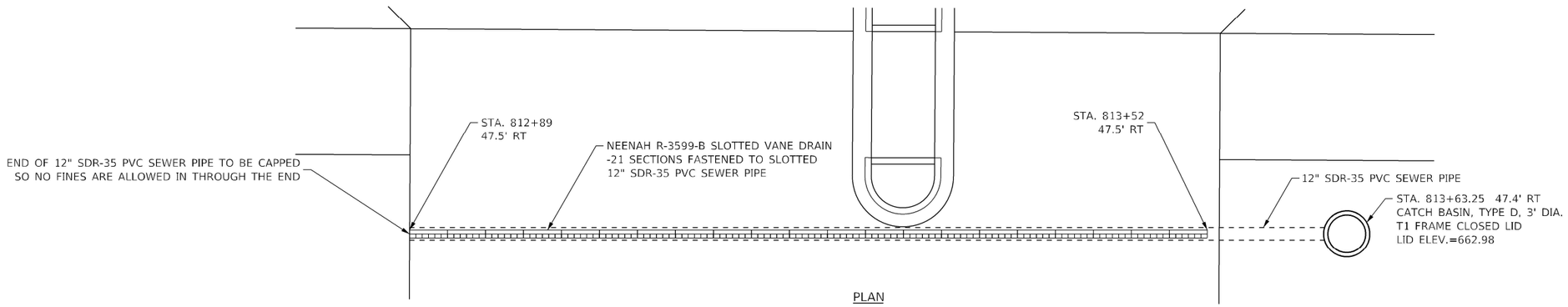

PLAN

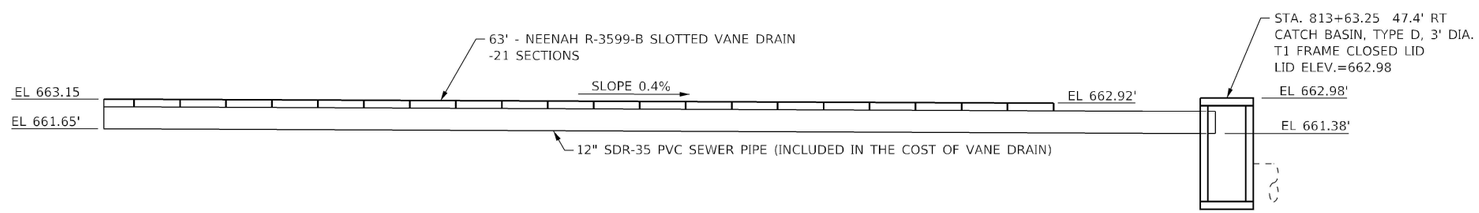

ELEVATION

MODEL: Default
FILE NAME: pw:\\ildot-pw.bentley.com:PWIDOT\Documents\IDOT Offices\District 2\Projects\64D78\Program Development\Studies & Plans\Design\CADD\CADsheets\D2 64D78-sht-district standards.dgn

USER NAME = hagensonjd	DESIGNED -	REVISED -	STATE OF ILLINOIS DEPARTMENT OF TRANSPORTATION	VANE DRAIN DETAIL	F.A.P. RTE.	SECTION	COUNTY	TOTAL SHEETS	SHEET NO.
	DRAWN -	REVISED -			646	9R & 9RS-3	WHITESIDE	222	160
PLOT SCALE = 100.0000 ' / in.	CHECKED -	REVISED -					CONTRACT NO. 64D78		
PLOT DATE = 10/22/2021	DATE -	REVISED -		SCALE: SHEET OF SHEETS STA. TO STA.			ILLINOIS FED. AID PROJECT		

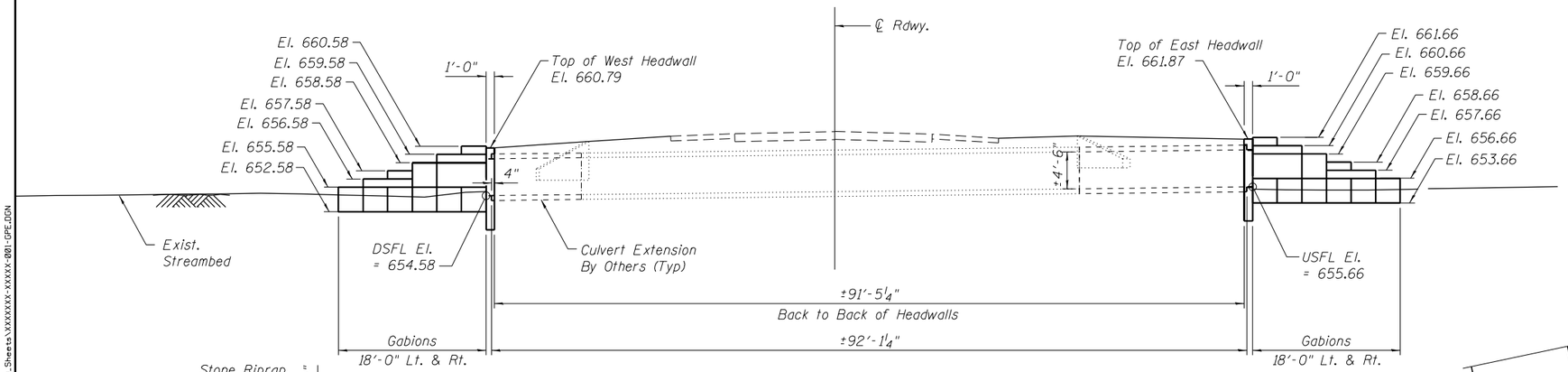

ELEVATION

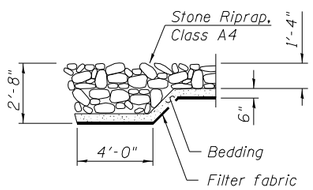

SECTION M-M

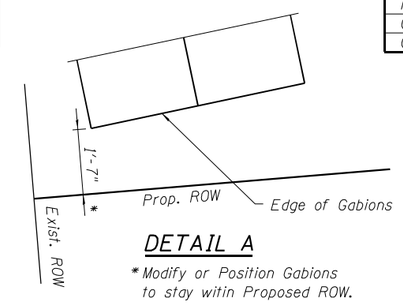

DETAIL A

*Modify or Position Gabions to stay witin Proposed ROW.

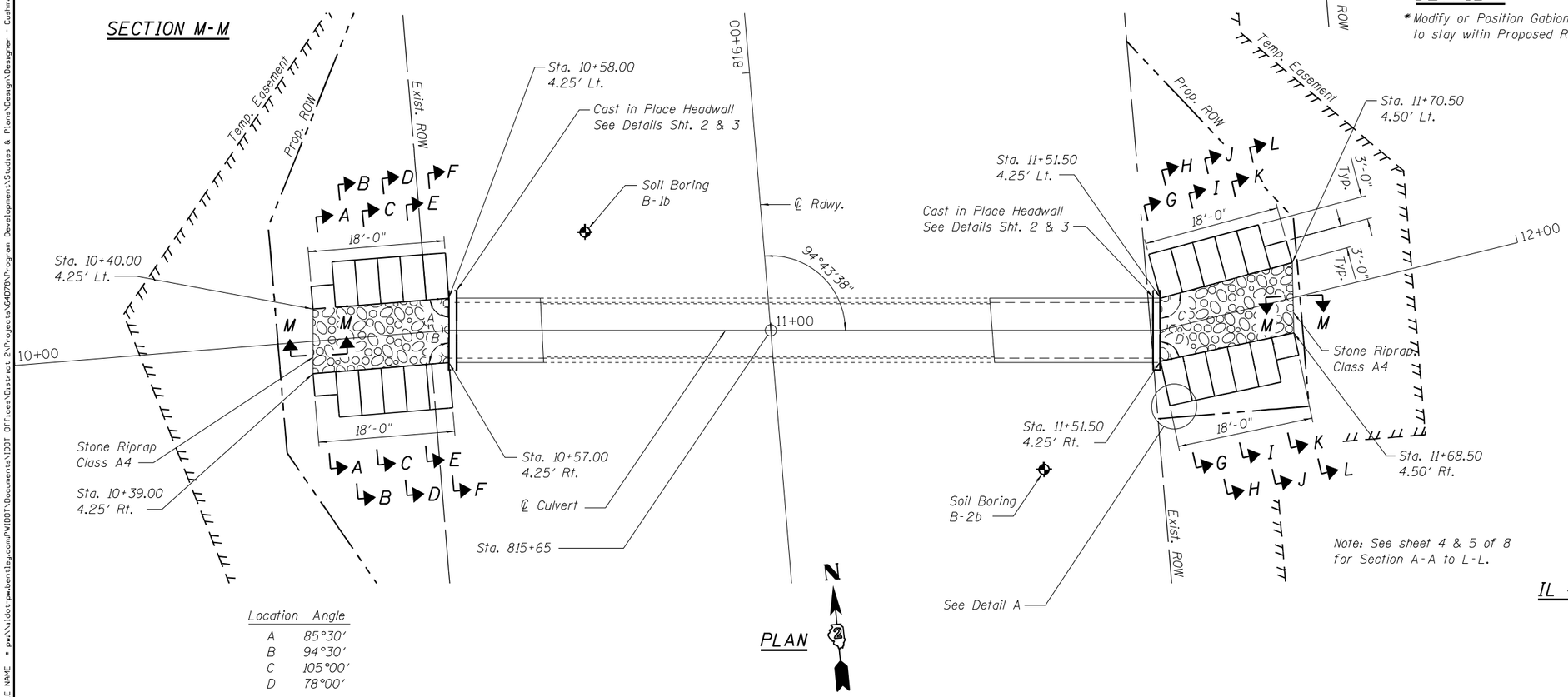

Location	Angle
A	85°30'
B	94°30'
C	105°00'
D	78°00'

PLAN

GENERAL NOTES

Reinforcement bars shall conform to the requirements of ASTM A 706 GR 60.

Layout of the slope protection system may be varied to suit ground conditions in the field as directed by the Engineer.

Filter fabric shall be placed underneath and on the back face of the gabion walls. The filter fabric shall extend full face at each end of the gabion walls.

Exposed edges shall be beveled ¾".

Contractor to confirm that a minimum allowable gross bearing pressure equal to 3000 psf can be achieved prior to construction of gabions.

See Roadway for grading plans.

TOTAL BILL OF MATERIAL

ITEM	UNIT	TOTAL
Structure Excavation	Cu. Yd.	30
Stone Riprap, Class A4	Sq. Yd.	35
Filter Fabric	Sq. Yd.	272
Concrete Headwall (Special)	Each	2
Gabions	Cu. Yd.	72

LOADING HL-93

Allow 50#/sq. ft. for future wearing surface.

DESIGN STRESSES

FIELD UNITS

f'c = 3,500 psi (Substructures)
fy = 60,000 psi (Reinforcement)

DESIGN SPECIFICATIONS

2014 AASHTO LRFD Bridge Design Specifications, 7th Edition

INDEX OF SHEETS

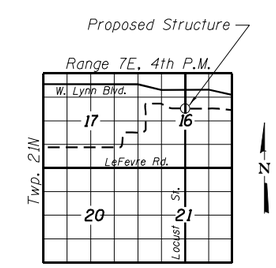

LOCATION SKETCH

GENERAL PLAN & ELEVATION
IL 40 (LOCUST STREET) OVER UNNAMED CREEK
F.A.P. RTE. 646 - SEC. 9TS & M-2
WHITESIDE COUNTY
STA. 815+65

STRAND ASSOCIATES
1170 SOUTH HOUBOLT ROAD
JOLIET, ILLINOIS 60431
(815) 744-4200
IDFPR NO. 184-001273

USER NAME = hagensonjd	DESIGNED - MJD	REVISED
	CHECKED - RDD	REVISED
PLOT SCALE = 0:2.0000 ':' / in.	DRAWN - JKP	REVISED
PLOT DATE = 10/22/2021	CHECKED - RDD	REVISED

STATE OF ILLINOIS
DEPARTMENT OF TRANSPORTATION

GENERAL PLAN AND ELEVATION

SHEET NO. 1 OF 8 SHEETS

F.A.P. RTE.	SECTION	COUNTY	TOTAL SHEETS	SHEET NO.
646	9R & 9RS-3	WHITESIDE	222	161
		CONTRACT NO. 64D78		
		ILLINOIS FED. AID PROJECT		

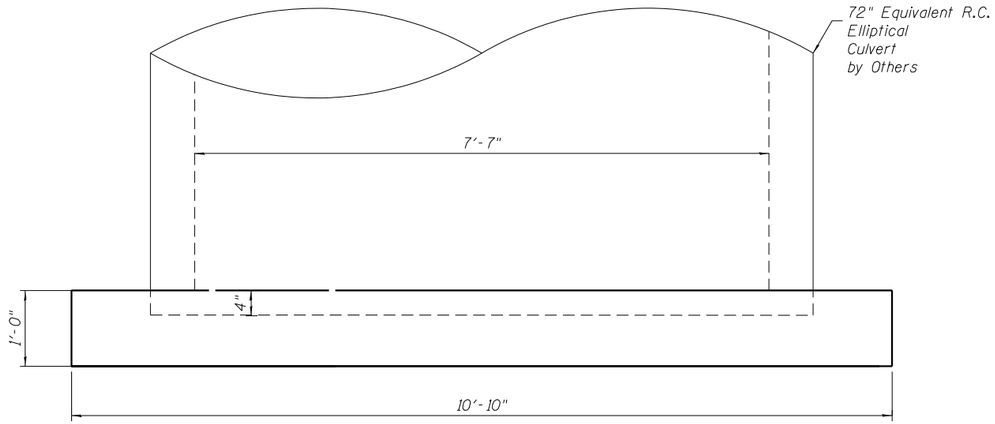

PLAN
(Showing Geometry)

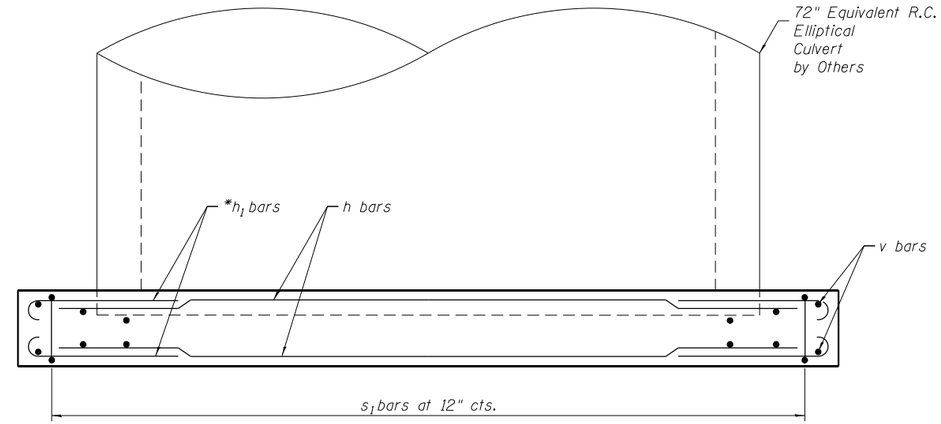

PLAN
(Showing Reinforcement)
12-#4 s bars at 12" cts.

* Rotate h_1 bars to fit.

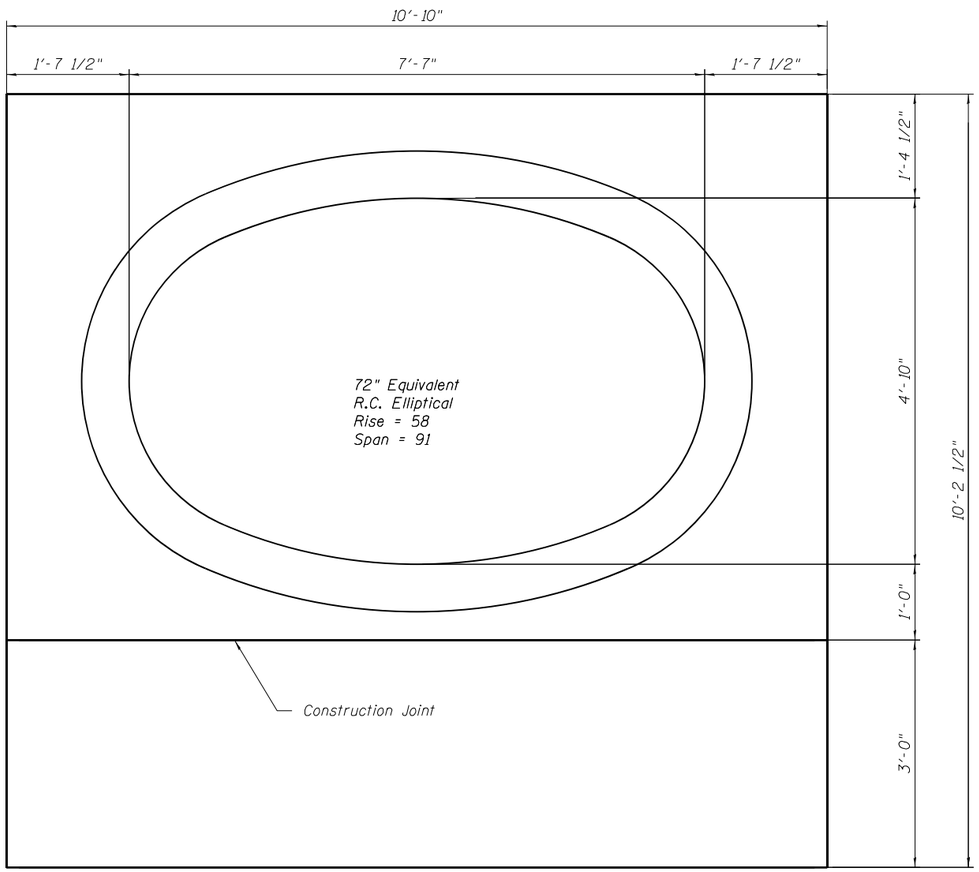

END VIEW
(Showing Geometry)

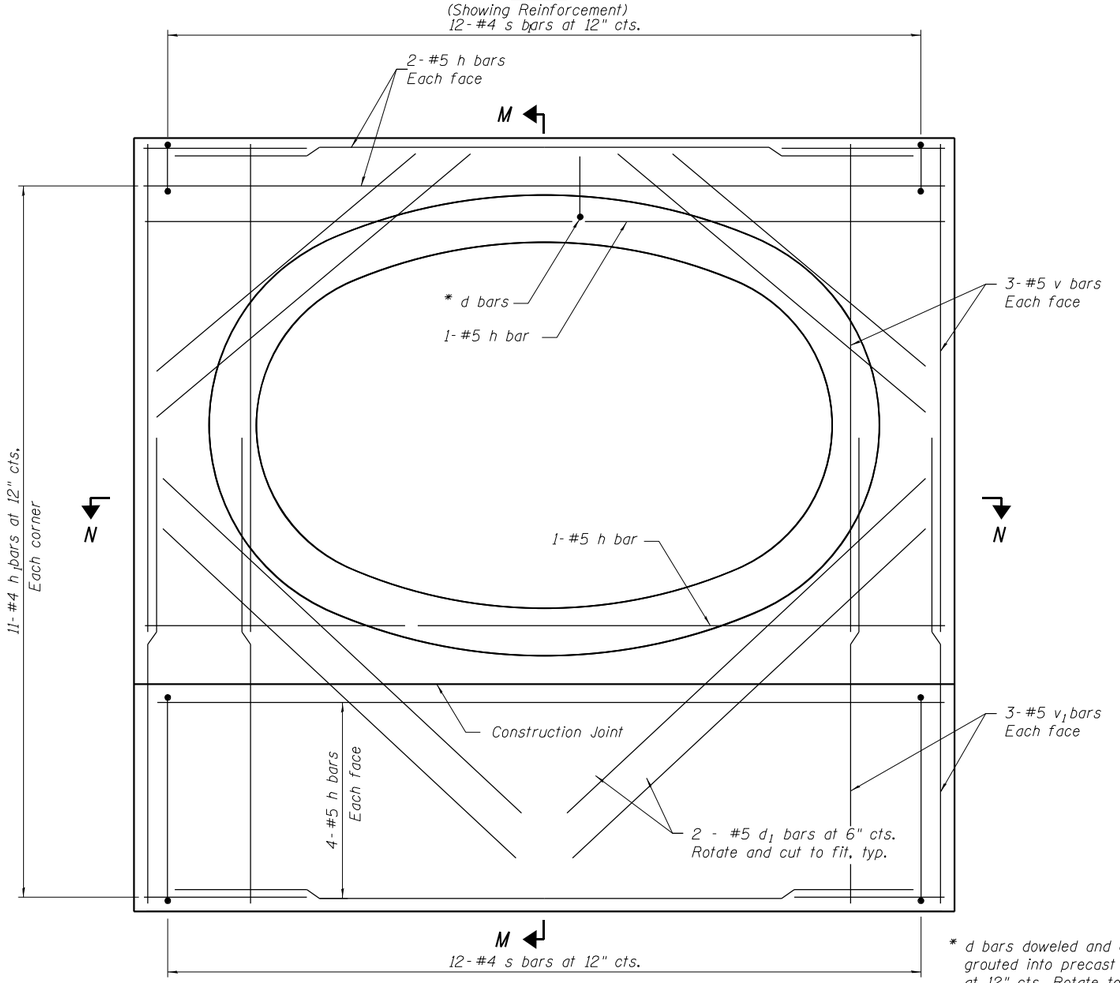

END VIEW
(Showing Reinforcement)

* d bars doweled and epoxy grouted into precast culvert at 12" cts. Rotate to fit.

FILE NAME = pw:\\ildot-pwbentley.com:PWIDOT\Documents\IDOT Offices\District 2\Projects\64D78\Program Development\Studies & Plans\Design\Designer - Cushman\Strand\Headwall & Gabions\CADD_Sheets\XXXXXXX-XXXXX-0002-CULDET1.DGN

STRAND ASSOCIATES 1170 SOUTH HOUBOLT ROAD JOLIET, ILLINOIS 60431 (815) 744-4200 IDFPR NO. 184-001273	USER NAME = hagensonjd	DESIGNED - MJD	REVISED	STATE OF ILLINOIS DEPARTMENT OF TRANSPORTATION	CULVERT END SECTION DETAILS	F.A.P. RTE.	SECTION	COUNTY	TOTAL SHEETS	SHEET NO.
		CHECKED - RDD	REVISED			646	9R & 9RS-3	WHITESIDE	222	162
	PLOT SCALE = 0:2.0000 ':' / in.	DRAWN - JKP	REVISED					CONTRACT NO. 64D78		
	PLOT DATE = 10/22/2021	CHECKED - RDD	REVISED		SHEET NO. 2 OF 8 SHEETS		ILLINOIS	FED. AID PROJECT		

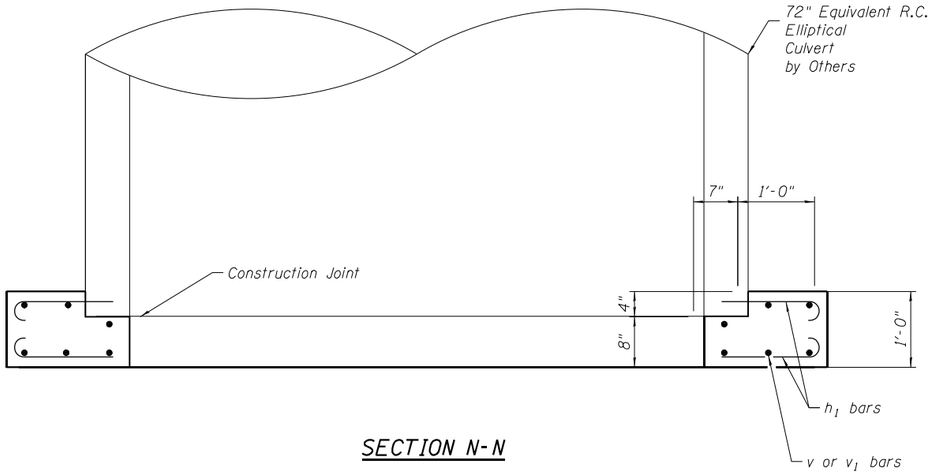

SECTION N-N

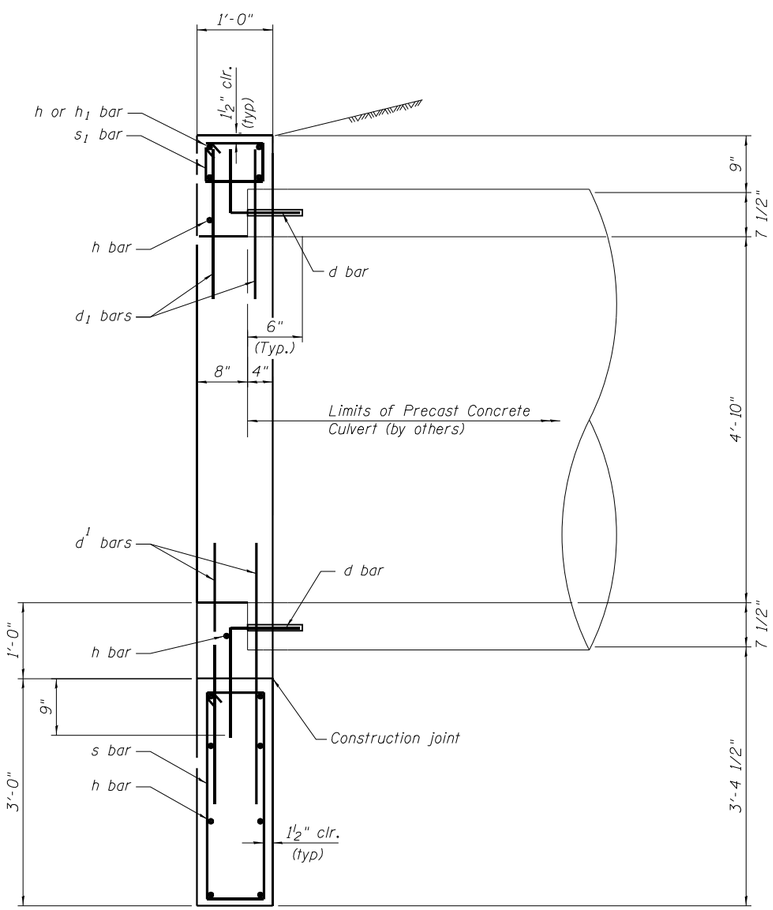

SECTION M-M

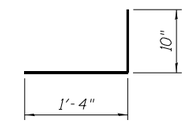

BAR d

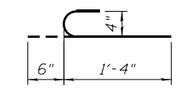

BAR h_1

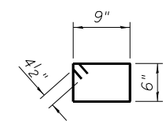

BAR s_1

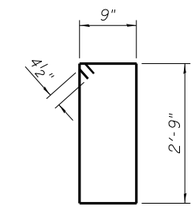

BAR s

MIN. BAR LAP

#5 bar = 2'-2"

BILL OF MATERIAL
ONE END SECTION

(For Information Only)

Bar	No.	Size	Length	Shape
d	22	#5	2'-2"	
d_1	16	#5	6'-6"	
h	14	#5	10'-6"	
h_1	44	#4	1'-10"	
s	12	#4	7'-9"	
s_1	12	#4	3'-3"	
v	12	#5	6'-10"	
v_1	12	#5	5'-9"	
Concrete Structures			Cu. Yd.	3
Reinforcement Bars			Pound	444

FILE NAME = pw:\\ildot-pwbentley.com:PWIDOT\Documents\IDOT Offices\District 2\Projects\64D78\Program Development\Studies & Plans\Design\Designer - Cushman\Strand\Headwall & Gabions\CADD_Sheets\XXXXXXX-XXXXX-003-CULDET2.DGN

STRAND ASSOCIATES
1170 SOUTH HOUBOLT ROAD
JOLIET, ILLINOIS 60431
(815) 744-4200
IDFPR NO. 184-001273

USER NAME = hagensonjd	DESIGNED - MJD	REVISED	
	CHECKED - RRD	REVISED	
PLOT SCALE = 0:2.0000 ':' / in.	DRAWN - JKP	REVISED	
PLOT DATE = 10/22/2021	CHECKED - RRD	REVISED	

STATE OF ILLINOIS
DEPARTMENT OF TRANSPORTATION

CULVERT END SECTION DETAILS

SHEET NO. 3 OF 8 SHEETS

F.A.P. RTE.	SECTION	COUNTY	TOTAL SHEETS	SHEET NO.
646	9R & 9RS-3	WHITESIDE	222	163
		CONTRACT NO. 64D78		
	ILLINOIS	FED. AID PROJECT		

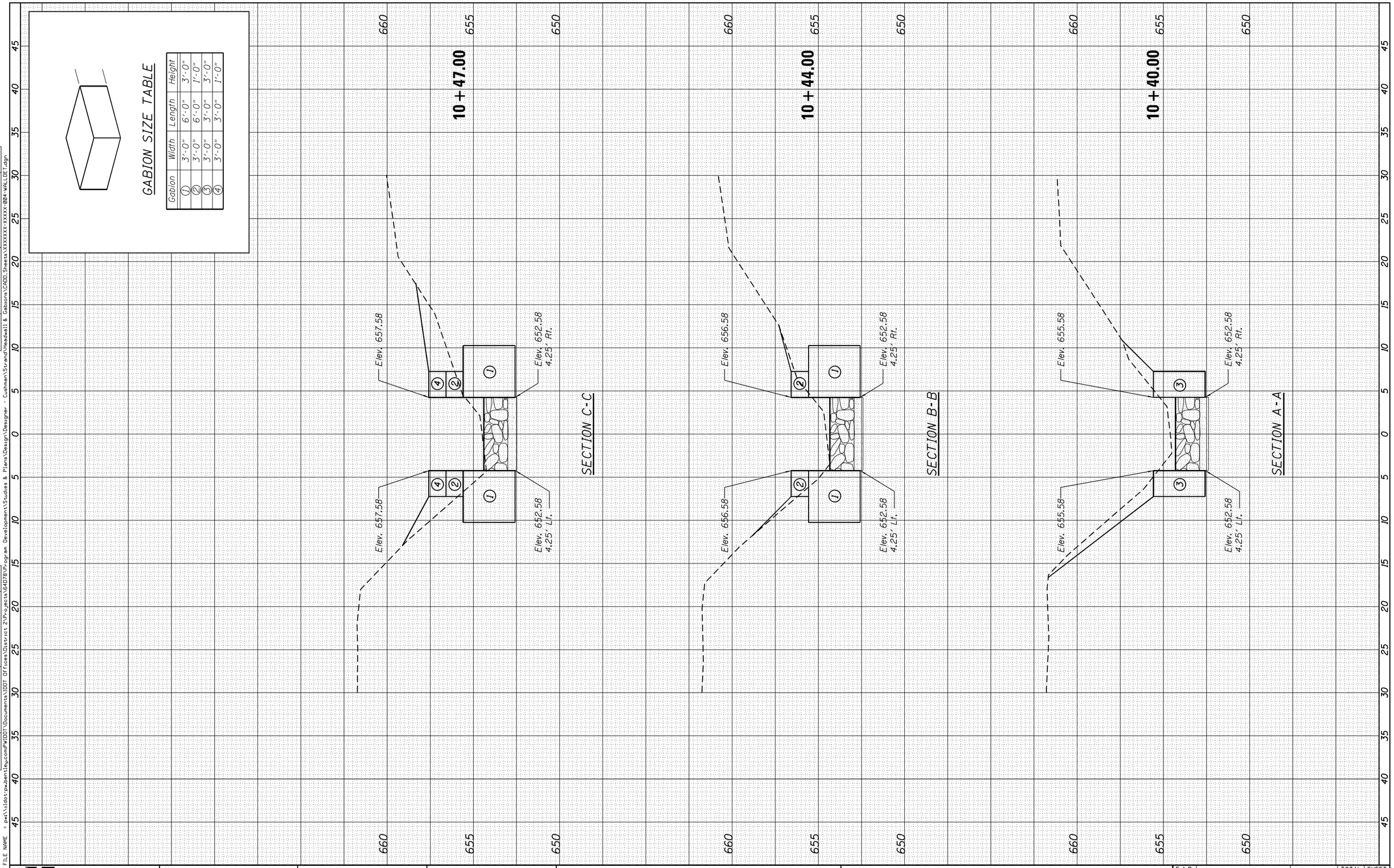

FILE NAME = pw:\\ildotpw.bentlaycompw|IDOT Offices\District 2\Projects\64D78\Program Development\Studies & Plans\Design\Designer - Cushman\Strand\Headwall & Gabions\CADD_Sheets\XXXXXXX-XXXX-004-WALLDET.dgn

FINAL SURVEY		BY	DATE
NOTE BOOK NO.	SURVEYED		
	PLOTTED		
	TEMPLATE		
	AREAS		
	AREAS CHECKED		

ORIGINAL SURVEY		BY	DATE
NOTE BOOK NO.	SURVEYED		
	PLOTTED		
	TEMPLATE		
	AREAS		
	AREAS CHECKED		

STRAND ASSOCIATES®
1170 SOUTH HOUBOLT ROAD
JOLIET, ILLINOIS 60431
(815) 744-4200

USER NAME = hogensonjd	DESIGNED - MJD	REVISED -
MODEL NAME = Default	DRAWN - JKP	REVISED -
PLOT SCALE = 10.0000 ' / in.	CHECKED - RRD	REVISED -
PLOT DATE = 10/22/2021	DATE - 10/22/2021	REVISED -

STATE OF ILLINOIS
DEPARTMENT OF TRANSPORTATION

GABION WALL CROSS SECTIONS

SCALE: 5-H 2.5-V | SHEET 4 OF 8 SHEETS | STA. 10+40.00 TO STA.10+47.00

F.A.P. RTE.	SECTION	COUNTY	TOTAL SHEETS	SHEET NO.
646	9R & 9RS-3	WHITESIDE	222	164

CONTRACT NO. 64D78

ILLINOIS FED. AID PROJECT

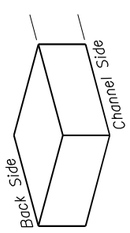

GABION SIZE TABLE

Gabion	Width	Length	Height
1	3'-0"	6'-0"	3'-0"
2	3'-0"	6'-0"	1'-0"
3	3'-0"	3'-0"	3'-0"
4	3'-0"	3'-0"	1'-0"

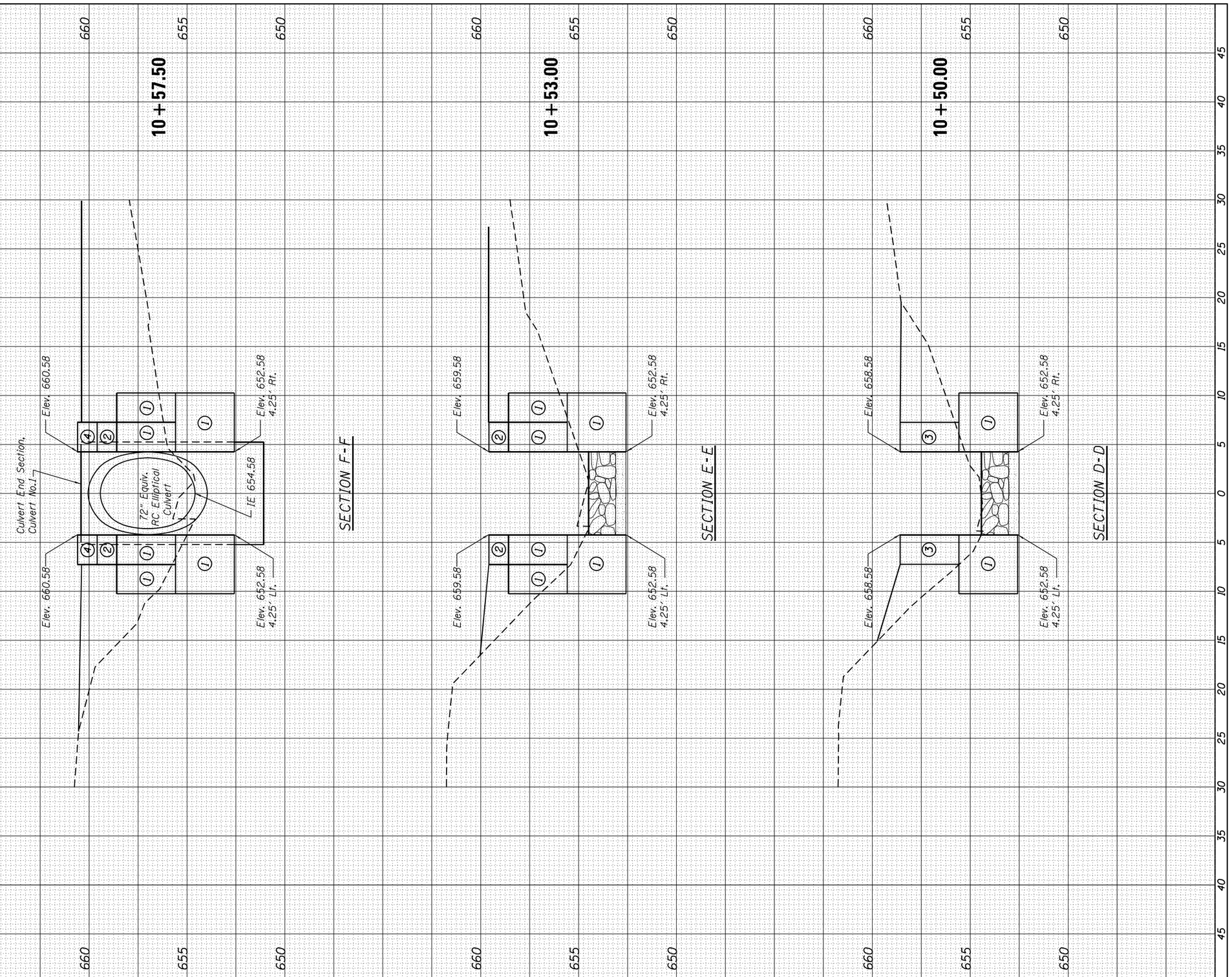

FILE NAME = pw:\\ildotpw.bentleycomPW:IDOT\Documents\IDOT Offices\District 2\Projects\64D78\Program Development\Studies & Plans\Design\Designer - Cushman\Strand\Headwall & Gabions\CADD_Sheets\XXXXXXX-XXXXX-004-WALLDET.dgn

ORIGINAL SURVEY	BY	DATE
SURVEYED		
PLOTTED		
TEMPLATE		
AREAS		
AREAS CHECKED		

NOTE BOOK NO.

FINAL SURVEY	BY	DATE
SURVEYED		
PLOTTED		
TEMPLATE		
AREAS		
AREAS CHECKED		

NOTE BOOK NO.

STRAND ASSOCIATES®
1170 SOUTH HOUBOLT ROAD
JOLIET, ILLINOIS 60431
(815) 744-4200

USER NAME = hagensonjd	DESIGNED - MJD	REVISED -
MODEL NAME = Default	DRAWN - JKP	REVISED -
PLOT SCALE = 10.0000 ' / in.	CHECKED - RRD	REVISED -
PLOT DATE = 10/22/2021	DATE -	REVISED -

STATE OF ILLINOIS
DEPARTMENT OF TRANSPORTATION

GABION WALL CROSS SECTIONS

SCALE: 5-H 2.5-V | SHEET 5 OF 8 SHEETS | STA. 10+50.00 TO STA.10+57.50

F.A.P. RTE.	SECTION	COUNTY	TOTAL SHEETS	SHEET NO.
646	9R & 9RS-3	WHITESIDE	222	165

CONTRACT NO. 64D78

ILLINOIS FED. AID PROJECT

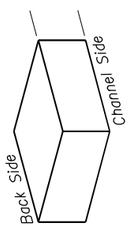

GABION SIZE TABLE

Gabion	Width	Length	Height
1	3'-0"	6'-0"	3'-0"
2	3'-0"	6'-0"	1'-0"
3	3'-0"	3'-0"	3'-0"
4	3'-0"	3'-0"	1'-0"

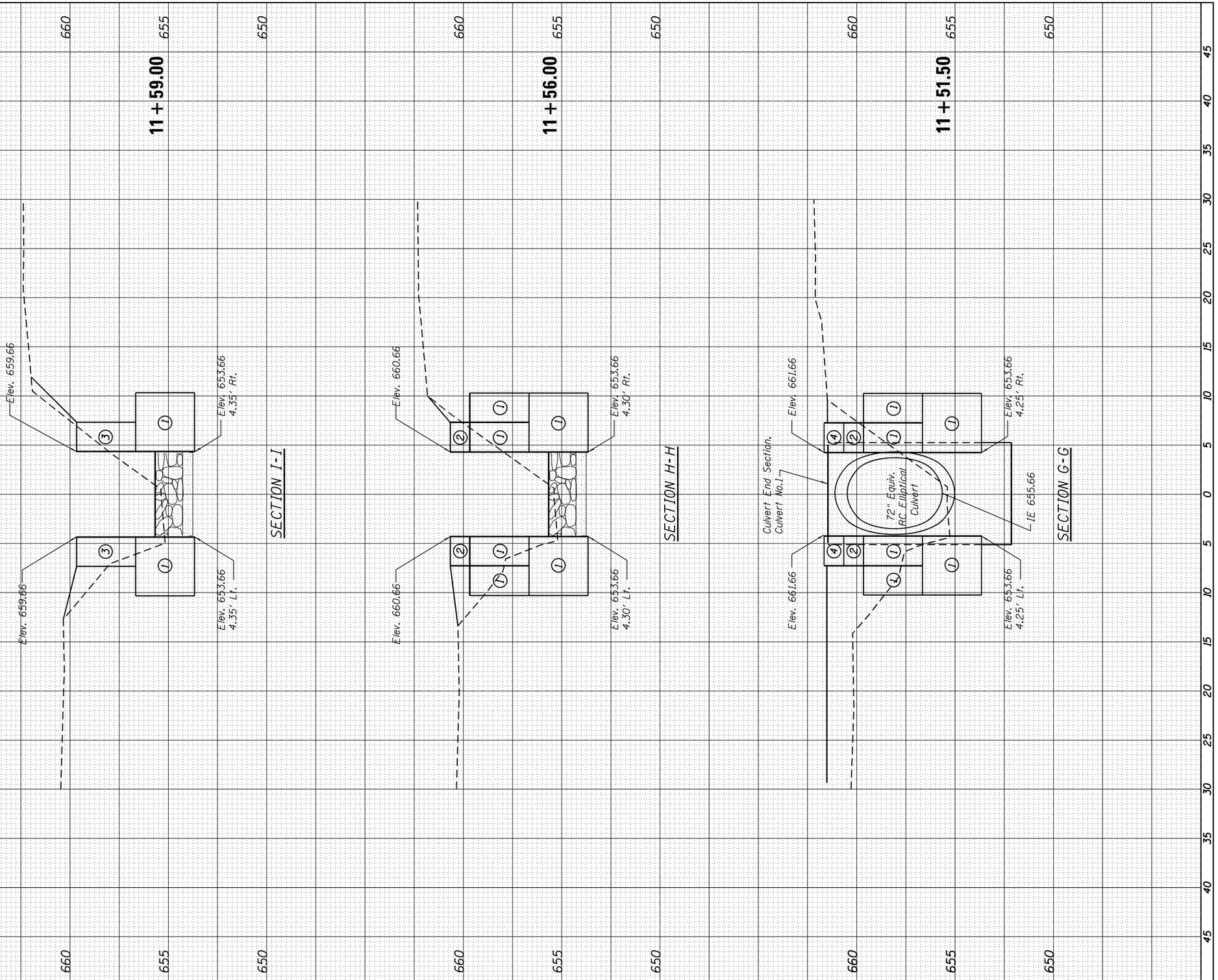

FINAL SURVEY		BY	DATE
NOTE BOOK	SURVEYED		
	PLOTTED		
	TEMPLATE		
	AREAS		
NO.	AREAS CHECKED		

ORIGINAL SURVEY		BY	DATE
NOTE BOOK	SURVEYED		
	PLOTTED		
	TEMPLATE		
	AREAS		
NO.	AREAS CHECKED		

FILE NAME = pw:\\idotpw.bentley.com:PWIDOT\Documents\IDOT Offices\District 2\Projects\64D78\Program Development\Studies & Plans\Design\Designer - Cushman\Strand\Headwall & Gabions\CADD_Sheets\XXXXXXX-XXXX-004-WALLDET.dgn

STRAND ASSOCIATES®
1170 SOUTH HOUBOLT ROAD
JOLIET, ILLINOIS 60431
(815) 744-4200

USER NAME = hagensonjd	DESIGNED - MJD	REVISED -
MODEL NAME = Default	DRAWN - JKP	REVISED -
PLOT SCALE = 10.0000 ' / in.	CHECKED - RRD	REVISED -
PLOT DATE = 10/22/2021	DATE - 10/22/2021	REVISED -

STATE OF ILLINOIS
DEPARTMENT OF TRANSPORTATION

GABION WALL CROSS SECTIONS

SCALE: 5-H 2.5-V | SHEET 6 OF 8 SHEETS | STA. 11+51.50 TO STA. 11+59.00

F.A.P. RTE.	SECTION	COUNTY	TOTAL SHEETS	SHEET NO.
646	9R & 9RS-3	WHITESIDE	222	166

CONTRACT NO. 64D78

ILLINOIS FED. AID PROJECT

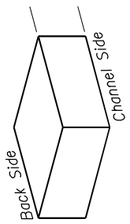

GABION SIZE TABLE

Gabion	Width	Length	Height
1	3'-0"	6'-0"	3'-0"
2	3'-0"	6'-0"	1'-0"
3	3'-0"	3'-0"	3'-0"
4	3'-0"	3'-0"	1'-0"

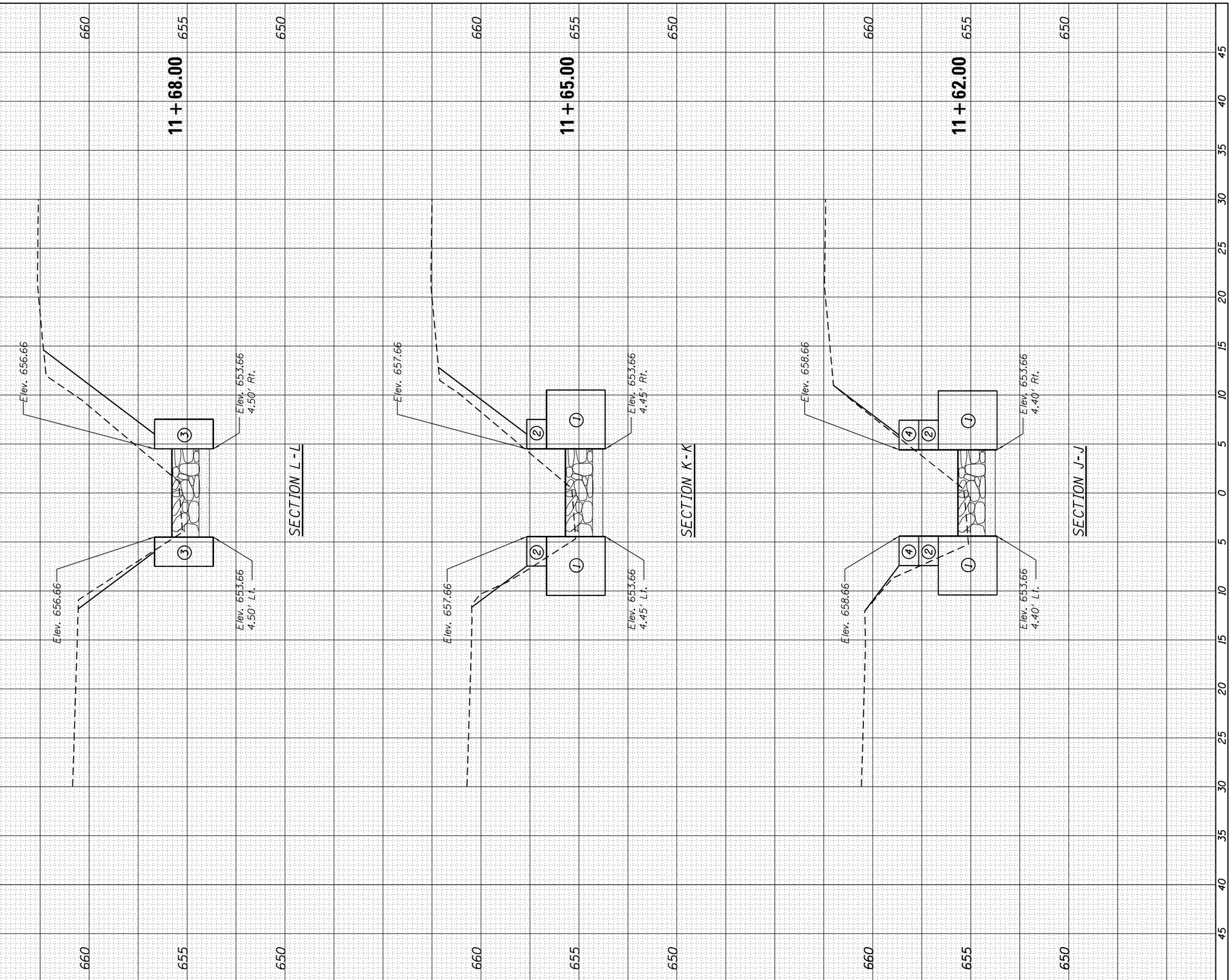

FINAL SURVEY		BY	DATE
NOTE BOOK	SURVEYED		
	PLOTTED		
	TEMPLATE		
	AREAS		
	AREAS CHECKED		

ORIGINAL SURVEY		BY	DATE
NOTE BOOK	SURVEYED		
	PLOTTED		
	TEMPLATE		
	AREAS		
	AREAS CHECKED		

FILE NAME = pw:\\idot-pw.bentley.com:PWIDOT\Documents\IDOT Offices\District 2\Projects\64D78\Program Development\Studies & Plans\Design\Designer - Cushman\Strand\Headwall & Gabions\CADD_Sheets\XXXXXXX-XXXX-004-WALLDET.dgn

STRAND ASSOCIATES®
1170 SOUTH HOUBOLT ROAD
JOLIET, ILLINOIS 60431
(815) 744-4200

USER NAME = hogensonjd	DESIGNED - MJD	REVISED -
MODEL NAME = Default	DRAWN - JKP	REVISED -
PLOT SCALE = 10.0000 ' / in.	CHECKED - RRD	REVISED -
PLOT DATE = 10/22/2021	DATE - 10/22/2021	REVISED -

STATE OF ILLINOIS
DEPARTMENT OF TRANSPORTATION

GABION WALL CROSS SECTIONS

SCALE: 5-H 2.5-V | SHEET 7 OF 8 SHEETS | STA. 11+62.00 TO STA.11+68.00

F.A.P. RTE.	SECTION	COUNTY	TOTAL SHEETS	SHEET NO.
646	9R & 9RS-3	WHITESIDE	222	167

CONTRACT NO. 64D78

ILLINOIS FED. AID PROJECT

Illinois Department of Transportation
Division of Highways
Illinois Department of Transportation/D-2

SOIL BORING LOG

Page 1 of 1

Date 4/25/11

ROUTE FAP 646 DESCRIPTION P92-001-08 Box Culvert on IL 40, .2 m. N. of Miller Road LOGGED BY W. Garza

SECTION 9TS & M-2 LOCATION Sterling Twp. - 21NW, SEC., TWP. 21N, RNG. 7E

COUNTY Whiteside DRILLING METHOD Hollow Stem Auger HAMMER TYPE CME-45 Automatic

STRUCT. NO.
Station 815+66

BORING NO. B-1b
Station 815+82
Offset 23.00ft Lt CL
Ground Surface Elev. 661.90 ft

Surface Water Elev. 93.60 ft
Stream Bed Elev. 93.20 ft

Groundwater Elev.:
First Encounter 647.4 ft ▼
Upon Completion Wash ft
After ___ Hrs. ___ ft

Description	Elev.	DEPTH (ft)	BLOWS (/6")	UCS Qu (tsf)	MOIST (%)
MEDIUM brown SILTY CLAY LOAM				0.5 P	25.0
	659.90				
SOFT brown SILTY CLAY LOAM			1		
			2	0.4 B	37.0
	658.40		2		
MEDIUM brown SILTY CLAY LOAM		-5	2		
			2	0.5 B	32.0
	655.90		2		
MEDIUM grey SILTY LOAM			1		
			2	0.5 P	26.0
	652.90		2		
LOOSE/MEDIUM tan fine moist SAND		-10	3		
			4		
	650.40		6		
STIFF tan CLAY LOAM TILL with SAND lens			2		
			4	1.4 B	17.0
	648.40		5		
VERY STIFF grey CLAY LOAM TILL		▼ -15	4		
			6	2.5 B	17.0
	645.90		10		
VERY STIFF grey CLAY LOAM TILL			5		
			6	2.7 B	16.0
	643.40		11		
STIFF grey SILTY LOAM		-20	5		
STIFF grey SILTY LOAM (continued)			7	1.3 B	18.0
			12		
	640.40				
Wash			3		
DENSE light grey well cemented fine SAND			12		
	638.40		22		
VERY DENSE light grey well-cemented SAND		-25	25		
			40		
	635.90		43		
End of Boring					

The Unconfined Compressive Strength (UCS) Failure Mode is indicated by (B-Bulge, S-Shear, P-Penetrometer)
The SPT (N value) is the sum of the last two blow values in each sampling zone (AASHTO T206)

BBS, from 137 (Rev. 8-99)

Illinois Department of Transportation
Division of Highways
Illinois Department of Transportation/D-2

SOIL BORING LOG

Page 1 of 1

Date 4/25/11

ROUTE FAP 646 DESCRIPTION P92-001-08 Box Culvert on IL 40, .2 m. N. of Miller Road LOGGED BY W. Garza

SECTION 9TS & M-2 LOCATION Sterling Twp. - 21NW, SEC., TWP. 21N, RNG. 7E

COUNTY Whiteside DRILLING METHOD Hollow Stem Auger HAMMER TYPE CME-45 Automatic

STRUCT. NO.
Station 815+66

BORING NO. B-2b
Station 815+45
Offset 34.00ft Rt CL
Ground Surface Elev. 662.40 ft

Surface Water Elev. ___ ft
Stream Bed Elev. ___ ft

Groundwater Elev.:
First Encounter 647.9 ft ▼
Upon Completion 642.4 ft ▽
After ___ Hrs. ___ ft

Description	Elev.	DEPTH (ft)	BLOWS (/6")	UCS Qu (tsf)	MOIST (%)
MEDIUM brown dirty SAND					
	660.40				
MEDIUM brown SANDY LOAM			1		
			3	0.5 P	11.0
	658.90		3		
MEDIUM brown SILTY CLAY LOAM		-5	1		
			2	0.8 P	35.0
	656.40		3		
MEDIUM light grey SILTY LOAM with SAND lens			0		
			1	0.8 P	21.0
	653.40		2		
LOOSE tan very moist SAND		-10	2		
			2		
	651.40		6		
LOOSE tan dirty SANDY GRAVEL			6		
			4		
	648.40		3		
VERY STIFF grey CLAY LOAM TILL		▼ -15	4		
			5	2.9 B	15.0
	646.40		8		
STIFF grey SILTY LOAM with dirty SAND lens			3		
			5	1.5 B	17.0
	643.90		20		
		▽ -20	11		
DENSE light grey well-cemented SAND (continued)			15		8.0
			20		
	640.90				
VERY DENSE light grey well-cemented SANDY GRAVEL			23		
			30		
	638.90		40		
VERY DENSE light grey well-cemented SANDY GRAVEL		-25	31		
			34		
	636.40		55		
End of Boring					

The Unconfined Compressive Strength (UCS) Failure Mode is indicated by (B-Bulge, S-Shear, P-Penetrometer)
The SPT (N value) is the sum of the last two blow values in each sampling zone (AASHTO T206)

BBS, from 137 (Rev. 8-99)

FILE NAME = pw:\\ildot-pwbent1ay.com:PWIDOT\Documents\IDOT Offices\District 2\Projects\64D78\Program Development\Studies & Plans\Design\Designer - Cushman\Strand\Headwall & Gabions\CADD_Sheets\XXXXXXX-XXXXX-006-SBL.dgn

STRAND ASSOCIATES
1170 SOUTH HOUBOLT ROAD
JOLIET, ILLINOIS 60431
(815) 744-4200
IDFPR NO. 184-001273

USER NAME = hagensonjd	DESIGNED - MJD	REVISED	
	CHECKED - RDD	REVISED	
PLOT SCALE = 0:2.0000 ':' / in.	DRAWN - JKP	REVISED	
PLOT DATE = 10/22/2021	CHECKED - RDD	REVISED	

STATE OF ILLINOIS
DEPARTMENT OF TRANSPORTATION

SOIL BORING LOGS

SHEET NO. 8 OF 8 SHEETS

F.A.P. RTE.	SECTION	COUNTY	TOTAL SHEETS	SHEET NO.
646	9R & 9RS-3	WHITESIDE	222	168

CONTRACT NO. 64D78

ILLINOIS FED. AID PROJECT

CATCH BASIN OR INLETS TO BE ADJUSTED OR RECONSTRUCTED
(DETAILS FOR CURB & GUTTER REPLACEMENT)

CONCRETE CURB AND GUTTER SHALL BE CONSTRUCTED IN ACCORDANCE WITH SECTION 606 OF THE STANDARD SPECIFICATIONS, SUPPLEMENTAL SPECIFICATIONS, STANDARD 606001 AND THIS DRAWING.

CLASS SI CONCRETE SHALL BE USED THROUGHOUT. A HOLE 1-1/2 IN DIAMETER AND 9 DEEP SHALL BE DRILLED IN THE EXISTING CONCRETE CURB AS SHOWN. A 1-1/4 X 18 SMOOTH DOWEL BAR SHALL BE GROUTED IN THE HOLE LONGITUDINALLY.

JOINTS OF A TYPE SIMILAR TO THAT IN THE UNDER-LYING PAVEMENT (EXPANSION OR CONTRACTION) SHALL BE INSTALLED IN THE CONCRETE CURB IN ALIGNMENT WITH THE JOINTS IN THE PAVEMENT.

THE PROPOSED CONFIGURATION OF THE CURB AND GUTTER SHALL MATCH THAT REMOVED.

THE LOCATION OF THE DOWEL BAR SHALL BE DETERMINED BY THE ENGINEER.

ALL EXISTING TIE BARS IN EDGE OF PAVEMENT SLAB THRU REPLACEMENT AREA SHALL BE CUT OFF.

THE WORK SHALL BE DONE IN ACCORDANCE WITH SECTION 602 OF THE STANDARD SPECIFICATIONS AND INCLUDES THE REMOVAL AND REPLACEMENT OF SOD, CONCRETE PAVEMENT AND/OR CURB AND GUTTER ADJACENT TO CATCH BASINS OR INLETS TO BE ADJUSTED OR RECONSTRUCTED AND SHALL BE INCLUDED IN THE PAY ITEM OF CATCH BASINS OR INLETS TO BE ADJUSTED OR RECONSTRUCTED AS SPECIFIED.

REVISED - 9-30-11

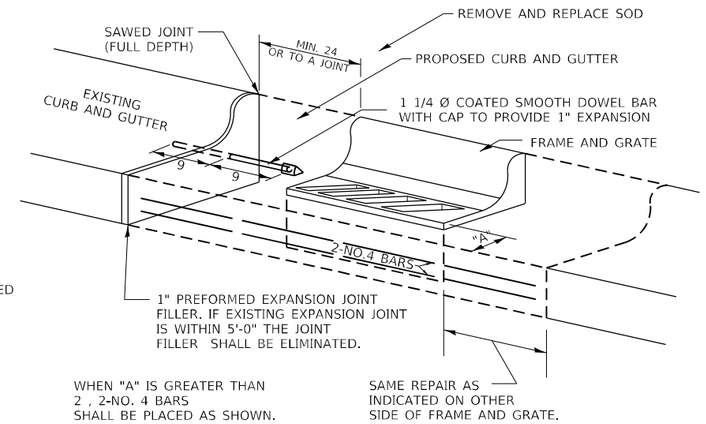

ALL DIMENSIONS ARE IN INCHES UNLESS OTHERWISE NOTED.

CATCH BASIN OR INLETS TO BE ADJUSTED OR RECONSTRUCTED 17.4

HOT–MIX ASPHALT SHOULDER

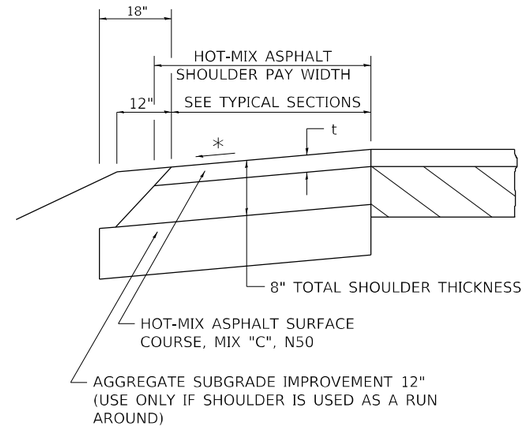

GENERAL NOTES

THE HOT-MIX ASPHALT SHOULDER SHALL BE CONSTRUCTED IN ACCORDANCE WITH SECTION 482 EXCEPT THE TOP LIFT SHALL BE HOT-MIX ASPHALT SURFACE COURSE, MIX "C", N50. THE WORK WILL BE PAID FOR AT THE CONTRACT UNIT PRICE PER TON FOR HOT-MIX ASPHALT SURFACE COURSE, MIX "C", N50 AND SQUARE YARD FOR HOT-MIX ASPHALT SHOULDERS OF THE THICKNESS SPECIFIED.

USE HOT-MIX ASPHALT SURFACE COURSE, MIX "C", N50. WHEN RESURFACING EXISTING HOT-MIX ASPHALT SHOULDERS. THE THICKNESS IS SHOWN ON THE TYPICAL SECTIONS. THIS WORK WILL BE PAID FOR AT THE CONTRACT UNIT PRICE PER TON FOR HOT-MIX ASPHALT SURFACE COURSE, MIX "C", N50.

REMOVAL OF MATERIAL FOR PLACEMENT OF THE HOT-MIX ASPHALT SHOULDER TO BE PAID FOR IN UNITS FOR EXCAVATING AND GRADING EXISTING SHOULDERS OR IN CUBIC YARDS FOR EARTH EXCAVATION OR EARTH EXCAVATION WIDENING.

* 4% WHEN MAINLINE IS ON TANGENT. FOR CROSS SLOPE ON SUPERELEVATION SECTION, SEE HIGHWAY STANDARD 482001 OR 482006.

REVISED - 1-05-16
REVISED - 3-13-13

HOT–MIX ASPHALT SHOULDER 22.4

SIDEWALK AND DRIVEWAY PAVEMENT PAY AREAS

PAY FOR AS

- SIDEWALK REMOVAL
- DRIVEWAY PAVEMENT REMOVAL
- PCC SIDEWALK 5
- PCC DRIVEWAY PAVEMENT 7

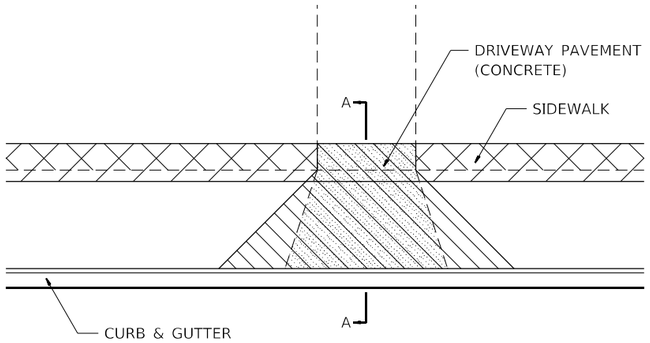

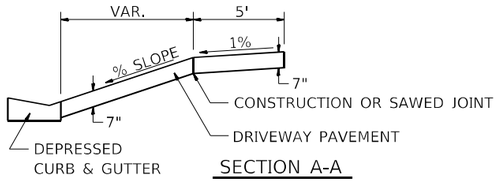

FOR DETAILS ON DIMENSIONS AND GRADES, SEE DISTRICT STANDARD 25.1 OR PLANS.

ALL DIMENSIONS ARE IN INCHES UNLESS OTHERWISE NOTED.

REVISED - 6-27-14
REVISED - 10-03-11

SIDEWALK AND DRIVEWAY PAVEMENT PAY AREAS 35.4

DELINEATOR AND POST ORIENTATION

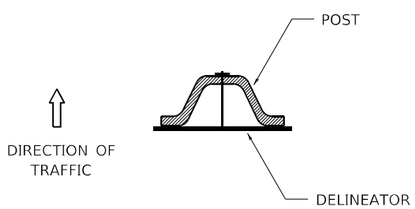

SECTION D-D

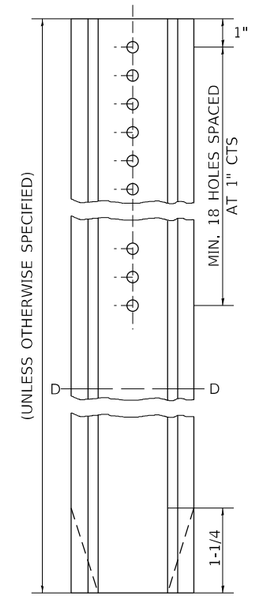

DELINEATORS SHALL BE INSTALLED ACCORDING TO STANDARD 635001 EXCEPT THAT THE POST SHALL BE ROTATED 180° . THE POST WILL HAVE THE WIDE SIDE FACING TRAFFIC AND THE DELINEATOR ATTACHECD AS SHOWN ABOVE.

ALL DIMENSIONS ARE IN INCHES UNLESS OTHERWISE NOTED.

REVISED - 10-03-11
REVISED -
REVISED -
REVISED -

REGION 2 / DISTRICT 2 STANDARD

SCALE: 100.0000 ' / in. SHEET OF SHEETS STA. TO STA.

F.A.P. RTE.	SECTION	COUNTY	TOTAL SHEETS	SHEET NO.
646	9R & 9RS-3	WHITESIDE	222	169
		CONTRACT NO. 64D78		
	ILLINOIS	FED. AID PROJECT		

DELINEATOR AND POST ORIENTATION 37.4

FILE NAME: pw:\\ildot-pw.bentley.com:PWIDOT\Documents\IDOT Offices\District 2\Projects\64D78\Program Development\Studies & Plans\Design\CADD\CADsheets\D2_64D78-sht-district standards.dgn
PLOT DATE = 10/22/2021

LAND SECTION & REFERENCE MARKERS

REFERENCE MARKER & LAND SECTION MARKER

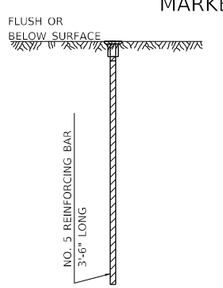

SECTION

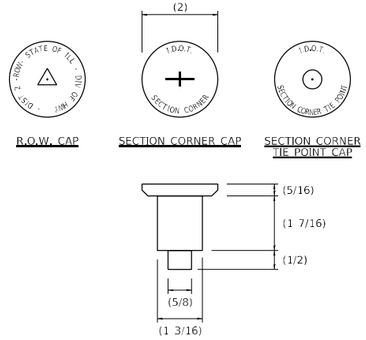

R.O.W. CAP — SECTION CORNER CAP — SECTION CORNER TIE POINT CAP

CAP DETAIL

METHOD OF REFERENCING MARKERS

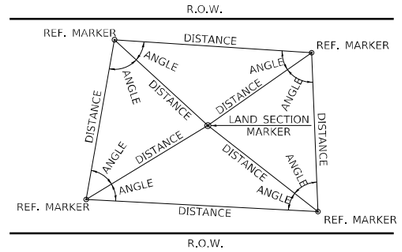

- USE INSTRUMENT TIES TO NEARBY LAND-MARKS (STEEPLES, TOWERS, SILOS, ETC...)
- IN CULTIVATED FIELDS, SET 28" OR MORE BELOW GROUND SURFACE.
- IN FENCE LINE OR PROTECTED AREA SET TOP AT GROUND LEVEL SO AS NOT TO BE DISTURBED BY MOWING.

ALL DIMENSIONS ARE IN INCHES UNLESS OTHERWISE NOTED.

METHOD OF REFERENCING POINTS

REFERENCE MARKERS SHALL BE USED TO TIE IN PERMANENT LAND SECTION AND 1/4 SECTION CORNERS. WHERE LAND SECTION MARKERS FALL IN THE SHOULDERS OR GRAVEL SURFACES, THE TOP OF THE BAR SHALL BE KEPT 3" BELOW THE SURFACE. LAND SECTION MARKERS LOCATED IN TRAFFIC LANES SHALL BE REPLACED BY CORE DRILL AND RESETTING PIN.

ALUMINUM CAPS SHALL BE PLACED ON TOP OF THE REINFORCEMENT BAR. THERE ARE 3 TYPES OF CAPS, ONE FOR THE RIGHT-OF-WAY CORNERS, ONE FOR THE SECTION CORNERS AND ONE FOR THE SECTION CORNER TIE POINTS. THE CAPS WILL BE SUPPLIED BY THE SURVEYOR WHO IS RESPONSIBLE FOR MONUMENTING CORNERS.

REVISED - 3-05-10

LAND SECTION & REFERENCE MARKERS 63.4

INLETS, SPECIAL, NO. 3

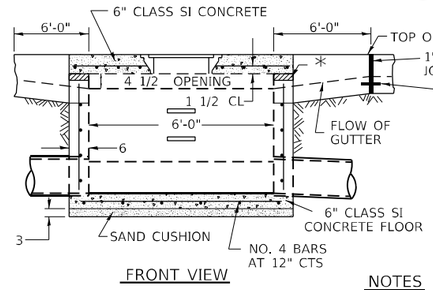

FRONT VIEW

STEPS AT 12 TO 16 CTS.

*THE WALL ADJUSTMENTS SHALL BE MADE WITH CONCRETE BUILDING BRICK OR CLASS SI CONCRETE.

THE HEIGHT OF THE BOX MAY BE CONSTRUCTED 6" SHORT TO ALLOW FOR FIELD ADJUSTMENTS.

ALL DIMENSIONS ARE IN INCHES UNLESS OTHERWISE NOTED.

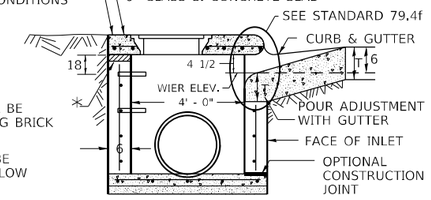

SEC. A-A

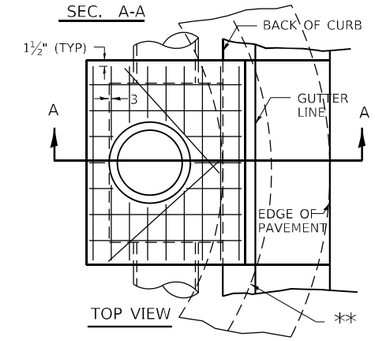

TOP VIEW

**WHEN INLET IS CONSTRUCTED IN RETURN, THE TOP OF SLAB SHALL CONFORM TO THE RADIUS OF THE RETURN.

NOTES

STEPS SHALL BE OMITTED WHEN DEPTH OF INLET IS LESS THAN 5 FOOT

THE INLET SHALL BE CAST IN PLACE OR PRECAST.

EXCEPT AS NOTED HEREON INLETS, SPECIAL, NO. 3 SHALL BE CONSTRUCTED IN ACCORDANCE WITH SECTION 602 OF THE STANDARD SPECIFICATIONS.

THE CONTRACT UNIT PRICE EACH FOR INLET SPECIAL NO. 3 SHALL INCLUDE THE COST OF FURNISHING AND INSTALLING THE FRAME, LID, REINFORCEMENT BARS, FLOOR AND TOP SLABS, CAST IRON STEPS (IF USED).

THE CURB AND GUTTER WILL BE PAID FOR SEPARATELY AND WILL BE MEASURED THROUGH THE INLET.

THE CURB AND GUTTER ADJACENT TO AND 6 FOOT ON EITHER SIDE OF THE INLET SHALL BE CONSTRUCTED AS SHOWN WITH NO ADDITIONAL COMPENSATION FOR THE TRANSITION.

ALL PIPE UNDERDRAIN CONNECTIONS WHEN SPECIFIED SHALL BE DONE IN ACCORDANCE WITH ART. 601 OF THE STANDARD SPECIFICATIONS. THIS WORK WILL BE PAID FOR AT THE CONTRACT UNIT PRICE PER (FOOT) FOR PIPE UNDERDRAINS, TYPE 2 OR PIPE UNDERDRAINS (SPECIAL) OF THE DIAMETER SPECIFIED WHICH PRICE SHALL INCLUDE THE CA7 OR CA16 AND THE CONNECTION TO THE INLET.

SEE STANDARD 602701 FOR DETAILS OF STEPS.

1" PREFORMED EXPANSION JOINTS AS SHOWN SHALL BE PROVIDED ON EACH SIDE OF INLET.

CLASS SI CONCRETE OR PRECAST CONCRETE SHALL BE USED TROUGHOUT.

THE SIDE WALLS MAY BE BUILT AS PRECAST SEGMENTAL SECTIONS.

REINFORCEMENT FOR INLETS, SPECIAL, NO. 3 SHALL BE ACCORDING TO DISTRICT STANDARD 79.4g

LIGHT WEIGHT MANHOLE CASTING

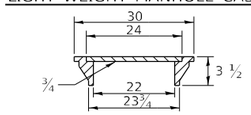

TOTAL WEIGHT 160 LBS.

REVISED - 1-05-16
REVISED - 8-27-13
REVISED - 10-03-11

INLETS, SPECIAL, NO. 3 79.4

INLETS, SPECIAL, NO. 5

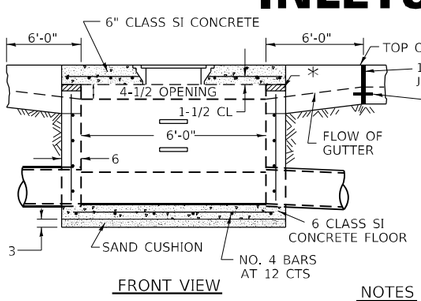

FRONT VIEW

STEPS AT 12 TO 16 CTS.

*THE WALL ADJUSTMENTS SHALL BE MADE WITH CONCRETE BUILDING BRICK OR CLASS SI CONCRETE.

THE HEIGHT OF THE BOX MAY BE CONSTRUCTED 6 SHORT TO ALLOW FOR FIELD ADJUSTMENTS.

ALL DIMENSIONS ARE IN INCHES UNLESS OTHERWISE NOTED.

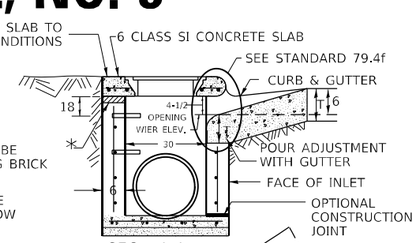

SEC. A-A

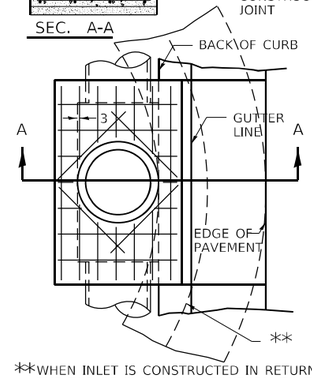

TOP VIEW

**WHEN INLET IS CONSTRUCTED IN RETURN, THE TOP OF SLAB SHALL CONFORM TO THE RADIUS OF THE RETURN.

NOTES

STEPS SHALL BE OMITTED WHEN DEPTH OF INLET IS LESS THAN 5 FOOT

THE INLET SHALL BE CAST IN PLACE OR PRECAST.

EXCEPT AS NOTED HEREON INLETS, SPECIAL, NO. 5 SHALL BE CONSTRUCTED IN ACCORDANCE WITH SECTION 602 OF THE STANDARD SPECIFICATIONS.

THE CONTRACT UNIT PRICE EACH FOR INLET SPECIAL NO. 5 SHALL INCLUDE THE COST OF FURNISHING AND INSTALLING THE FRAME, LID, REINFORCEMENT BARS, FLOOR AND TOP SLABS, CAST IRON STEPS (IF USED).

THE CURB AND GUTTER WILL BE PAID FOR SEPARATELY AND WILL BE MEASURED THROUGH THE INLET.

THE CURB AND GUTTER ADJACENT TO AND 6 FOOT ON EITHER SIDE OF THE INLET SHALL BE CONSTRUCTED AS SHOWN WITH NO ADDITIONAL COMPENSATION FOR THE TRANSITION.

ALL PIPE UNDERDRAIN CONNECTIONS WHEN SPECIFIED SHALL BE DONE IN ACCORDANCE WITH ART. 601 OF THE STANDARD SPECIFICATIONS. THIS WORK WILL BE PAID FOR AT THE CONTRACT UNIT PRICE PER (FOOT) FOR PIPE UNDERDRAINS, TYPE 2 OR PIPE UNDERDRAINS (SPECIAL) OF THE DIAMETER SPECIFIED WHICH PRICE SHALL INCLUDE THE CA7 OR CA16 AND THE CONNECTION TO THE INLET.

SEE STANDARD 602701 FOR DETAILS OF STEPS.

1" PREFORMED EXPANSION JOINTS AS SHOWN SHALL BE PROVIDED ON EACH SIDE OF INLET.

CLASS SI CONCRETE OR PRECAST CONCRETE SHALL BE USED TROUGHOUT.

THE SIDE WALLS MAY BE BUILT AS PRECAST SEGMENTAL SECTIONS.

REINFORCEMENT FOR INLETS, SPECIAL, NO. 5 SHALL BE ACCORDING TO DISTRICT STANDARD 79.4g

LIGHT WEIGHT MANHOLE CASTING

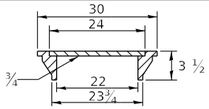

TOTAL WEIGHT 160 LBS.

REVISED - 1-05-16
REVISED - 8-27-13
REVISED - 10-04-11

INLETS, SPECIAL, NO. 5 79.4b

INLETS, SPECIAL, NO. 8

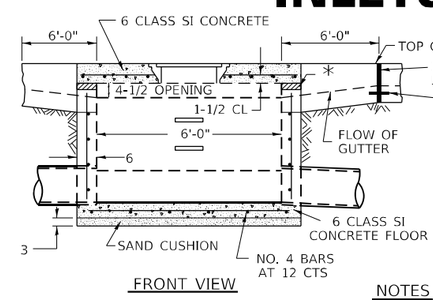

FRONT VIEW

STEPS AT 12 TO 16 CTS.

*THE WALL ADJUSTMENTS SHALL BE MADE WITH CONCRETE BUILDING BRICK OR CLASS SI CONCRETE.

THE HEIGHT OF THE BOX MAY BE CONSTRUCTED 6 SHORT TO ALLOW FOR FIELD ADJUSTMENTS.

ALL DIMENSIONS ARE IN INCHES UNLESS OTHERWISE NOTED.

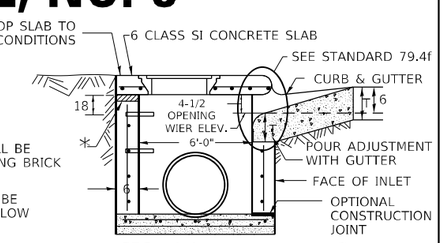

SEC. A-A

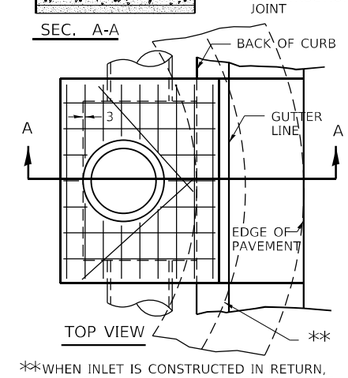

TOP VIEW

**WHEN INLET IS CONSTRUCTED IN RETURN, THE TOP OF SLAB SHALL CONFORM TO THE RADIUS OF THE RETURN.

NOTES

STEPS SHALL BE OMITTED WHEN DEPTH OF INLET IS LESS THAN 5 FOOT

THE INLET SHALL BE CAST IN PLACE OR PRECAST.

EXCEPT AS NOTED HEREON INLETS, SPECIAL, NO. 8 SHALL BE CONSTRUCTED IN ACCORDANCE WITH SECTION 602 OF THE STANDARD SPECIFICATIONS.

THE CONTRACT UNIT PRICE EACH FOR INLET SPECIAL NO. 8 SHALL INCLUDE THE COST OF FURNISHING AND INSTALLING THE FRAME, LID, REINFORCEMENT BARS, FLOOR AND TOP SLABS, CAST IRON STEPS (IF USED).

THE CURB AND GUTTER WILL BE PAID FOR SEPARATELY AND WILL BE MEASURED THROUGH THE INLET.

THE CURB AND GUTTER ADJACENT TO AND 6 FOOT ON EITHER SIDE OF THE INLET SHALL BE CONSTRUCTED AS SHOWN WITH NO ADDITIONAL COMPENSATION FOR THE TRANSITION.

ALL PIPE UNDERDRAIN CONNECTIONS WHEN SPECIFIED SHALL BE DONE IN ACCORDANCE WITH ART. 601 OF THE STANDARD SPECIFICATIONS. THIS WORK WILL BE PAID FOR AT THE CONTRACT UNIT PRICE PER (FOOT) FOR PIPE UNDERDRAINS, TYPE 2 OR PIPE UNDERDRAINS (SPECIAL) OF THE DIAMETER SPECIFIED WHICH PRICE SHALL INCLUDE THE CA7 OR CA16 AND THE CONNECTION TO THE INLET.

SEE STANDARD 602701 FOR DETAILS OF STEPS.

1" PREFORMED EXPANSION JOINTS AS SHOWN SHALL BE PROVIDED ON EACH SIDE OF INLET.

CLASS SI CONCRETE OR PRECAST CONCRETE SHALL BE USED TROUGHOUT.

THE SIDE WALLS MAY BE BUILT AS PRECAST SEGMENTAL SECTIONS.

REINFORCEMENT FOR INLETS, SPECIAL, NO. 8 SHALL BE ACCORDING TO DISTRICT STANDARD 79.4h

LIGHT WEIGHT MANHOLE CASTING

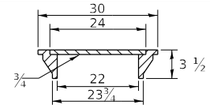

TOTAL WEIGHT 160 LBS.

REVISED - 1-05-16
REVISED - 8-27-13
REVISED - 10-05-11
REVISED -

REGION 2 / DISTRICT 2 STANDARD

SCALE: 100.0000 ' / in. SHEET OF SHEETS STA. TO STA.

F.A.P. RTE.	SECTION	COUNTY	TOTAL SHEETS	SHEET NO.
646	9R & 9RS-3	WHITESIDE	222	170

CONTRACT NO. 64D78

ILLINOIS FED. AID PROJECT

INLETS, SPECIAL, NO. 8 79.4e

FILE NAME: pw:\\ildot-pw.bentley.com:PWIDOT\Documents\IDOT Offices\District 2\Projects\64D78\Program Development\Studies & Plans\Design\CADD\CADsheets\02_64D78-sht-district standards.dgn
PLOT DATE = 10/22/2021

NOSE TYPE FOR INLET TOP SLAB

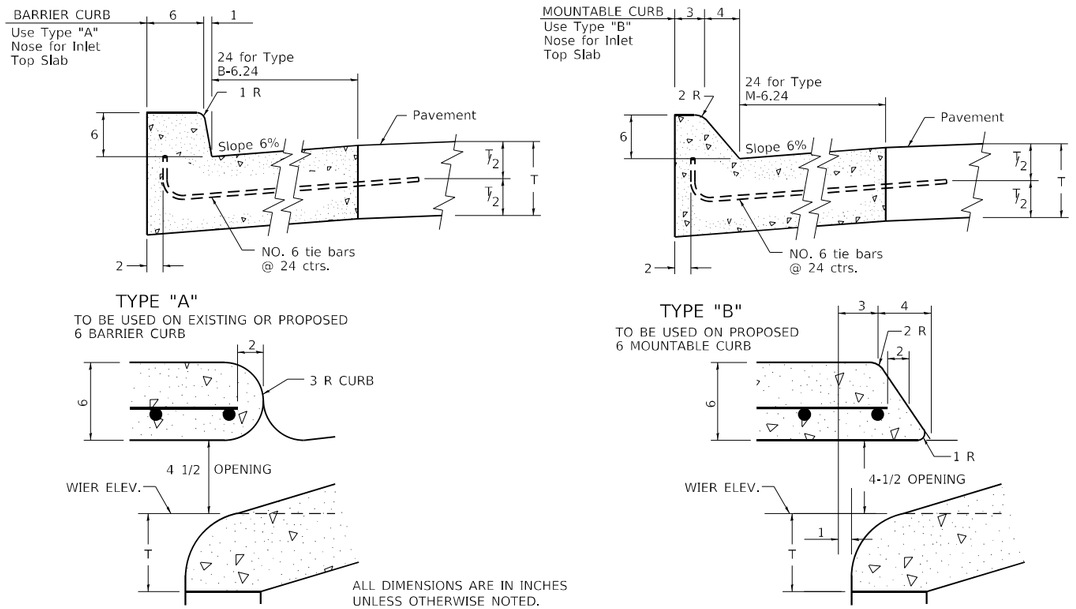

REVISED - 4-14-15
REVISED - 10-05-11

NOSE TYPE FOR INLET TOP SLAB 79.4f

INLETS, SPECIAL, NO. 3, 4, 5, 6 REINFORCEMENT DETAIL

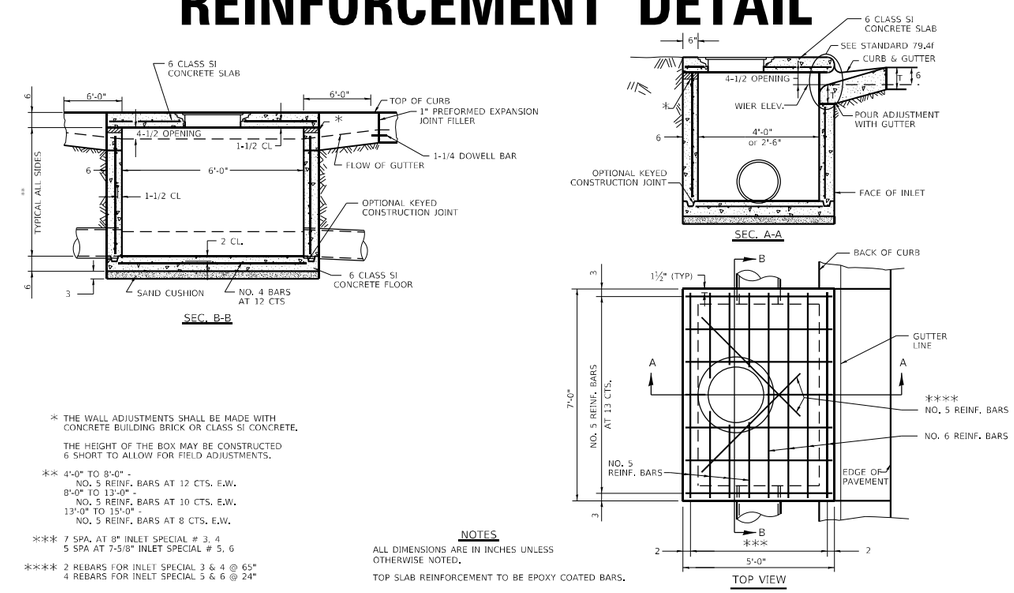

* THE WALL ADJUSTMENTS SHALL BE MADE WITH CONCRETE BUILDING BRICK OR CLASS SI CONCRETE.

THE HEIGHT OF THE BOX MAY BE CONSTRUCTED 6 SHORT TO ALLOW FOR FIELD ADJUSTMENTS.

** 4'-0" TO 8'-0" -
NO. 5 REINF. BARS AT 12 CTS. E.W.
8'-0" TO 13'-0" -
NO. 5 REINF. BARS AT 10 CTS. E.W.
13'-0" TO 15'-0" -
NO. 5 REINF. BARS AT 8 CTS. E.W.

*** 7 SPA. AT 8" INLET SPECIAL # 3, 4
5 SPA AT 7-5/8" INLET SPECIAL # 5, 6

**** 2 REBARS FOR INLET SPECIAL 3 & 4 @ 65"
4 REBARS FOR INELT SPECIAL 5 & 6 @ 24"

NOTES

ALL DIMENSIONS ARE IN INCHES UNLESS OTHERWISE NOTED.

TOP SLAB REINFORCEMENT TO BE EPOXY COATED BARS.

REVISED - 4-13-16
REVISED - 8-27-13
REVISED - 10-05-11

INLETS, SPECIAL, NO. 3, 4, 5, 6 REINFORCEMENT DETAIL 79.4g

INLETS, SPECIAL, NO. 7 & 8 REINFORCEMENT DETAIL

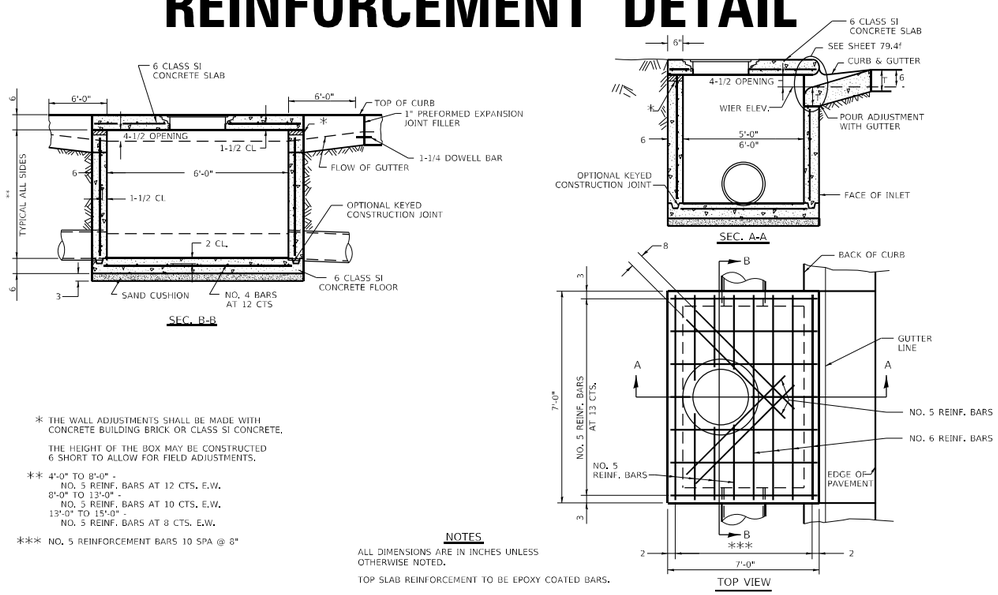

* THE WALL ADJUSTMENTS SHALL BE MADE WITH CONCRETE BUILDING BRICK OR CLASS SI CONCRETE.

THE HEIGHT OF THE BOX MAY BE CONSTRUCTED 6 SHORT TO ALLOW FOR FIELD ADJUSTMENTS.

** 4'-0" TO 8'-0" -
NO. 5 REINF. BARS AT 12 CTS. E.W.
8'-0" TO 13'-0" -
NO. 5 REINF. BARS AT 10 CTS. E.W.
13'-0" TO 15'-0" -
NO. 5 REINF. BARS AT 8 CTS. E.W.

*** NO. 5 REINFORCEMENT BARS 10 SPA @ 8"

NOTES

ALL DIMENSIONS ARE IN INCHES UNLESS OTHERWISE NOTED.

TOP SLAB REINFORCEMENT TO BE EPOXY COATED BARS.

REVISED - 4-13-16
REVISED - 8-27-13
REVISED - 10-05-11

INLETS, SPECIAL, NO. 7 & 8 REINFORCEMENT DETAIL 79.4h

DRAIN FOR AGGREGATE BASES IN URBAN AREAS

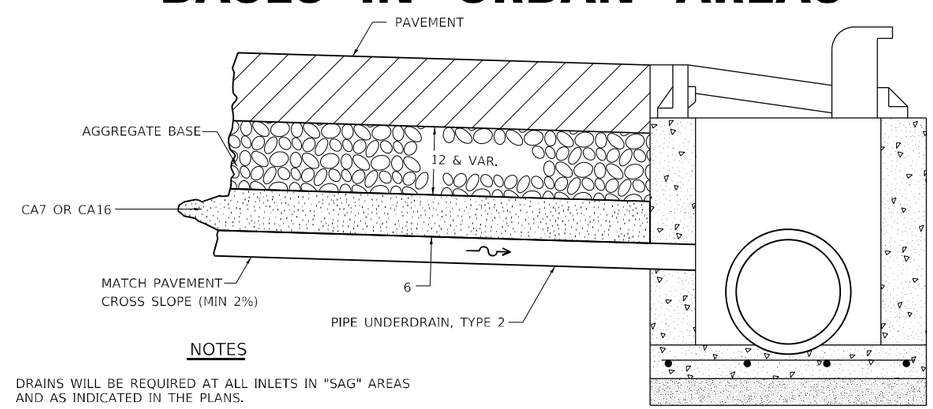

NOTES

DRAINS WILL BE REQUIRED AT ALL INLETS IN "SAG" AREAS AND AS INDICATED IN THE PLANS.

THIS WORK SHALL BE COMPLETED ACCORDING TO SECTION 601 OF THE STANDARD SPECIFICATIONS.

THIS WORK WILL BE PAID FOR AT THE CONTRACT UNIT PRICE PER FOOT FOR PIPE UNDERDRAINS, TYPE 2 OF THE DIAMETER SPECIFIED WHICH PRICE SHALL INCLUDE THE CA7 OR CA16 AND THE CONNECTION TO THE INLET.

ALL DIMENSIONS ARE IN INCHES UNLESS OTHERWISE NOTED.

DRAIN FOR AGGREGATE BASES IN URBAN AREAS 88.4

REVISED - 1-05-16	REGION 2 / DISTRICT 2 STANDARD	F.A.P. RTE.	SECTION	COUNTY	TOTAL SHEETS	SHEET NO.
REVISED - 10-05-11		646	9R & 9RS-3	WHITSIDE	222	171
REVISED -				CONTRACT NO. 64D78		
REVISED -	SCALE: 100.0000 ' / in. SHEET OF SHEETS STA. TO STA.		ILLINOIS	FED. AID PROJECT		

FILE NAME: pw:\\ildot-pw.bentley.com:PWIDOT\Documents\IDOT Offices\District 2\Projects\64D78\Program Development\Studies & Plans\Design\CADD\CADsheets\D2_64D78-sht-district standards.dgn
PLOT DATE = 10/22/2021

INLETS, SPECIAL

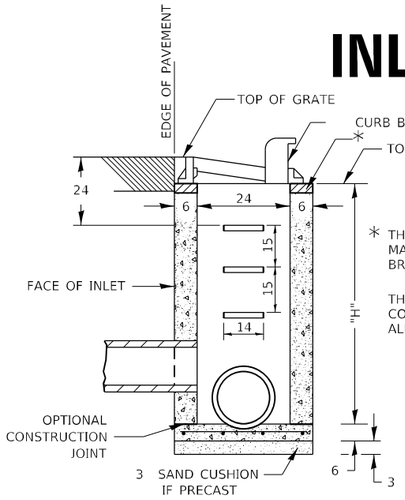

SEC. A-A

* THE WALL ADJUSTMENTS SHALL BE MADE WITH CONCRETE BUILDING BRICK OR CLASS SI CONCRETE.

THE HEIGHT OF THE BOX MAY BE CONSTRUCTED 6 SHORT TO ALLOW FOR FIELD ADJUSTMENTS.

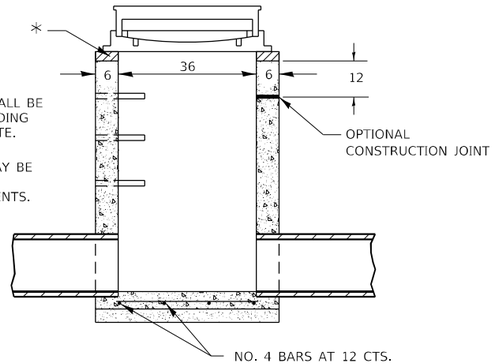

SEC. B-B

NOTES

SEE STANDARD 602701 FOR DETAILS OF STEPS.

EXCEPT AS NOTED HEREON INLET SPECIAL SHALL BE CONSTRUCTED IN ACCORDANCE WITH SECTION 602 OF THE STANDARD SPECIFICATIONS.

THE SIDE WALLS MAY BE BUILT AS PRECAST SEGMENTED SECTIONS.

ALL VOIDS AROUND PIPE ENTRANCE, BOTH INSIDE AND OUTSIDE, SHALL BE SEALED WITH MORTAR.

WEIGHT OF CAST IRON FRAME & GRATE = 530 lbs. ± . STEPS SHALL BE OMITTED WHEN DEPTH OF "H" IS LESS THAN 5 ft.

CLASS SI CONCRETE OR PRECAST CONCRETE SHALL BE USED THROUGHOUT. PRECAST CONCRETE SHALL BE IN ACCORDANCE WITH ARTICLES 504.01 THRU 504.05 OF THE STANDARD SPECIFICATIONS EXCEPT THAT CONCRETE STRENGTH SHALL BE 4,000 psi AFTER 28 DAYS.

THE CONTRACT UNIT PRICE EACH FOR INLETS, SPECIAL SHALL INCLUDE THE COST OF CONSTRUCTING THE INLET BOX, FURNISHING AND INSTALLING THE FRAME AND GRATE, THE CAST IRON STEPS (IF USED), THE PRECAST FLOOR SLABS, SAND CUSHION (WHEN USED) AND REINFORCEMENT BARS.

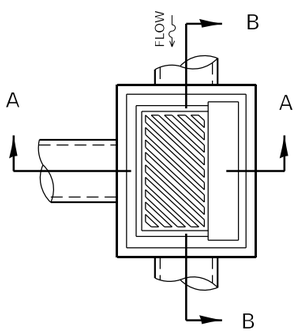

DETAIL OF FRAME & GRATE

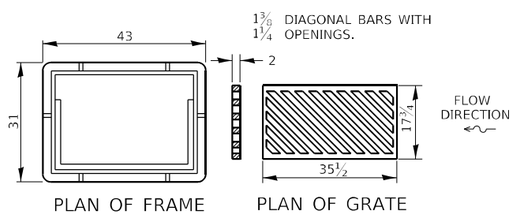

PLAN OF FRAME PLAN OF GRATE

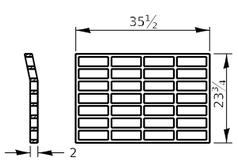

PLAN OF GRATE *

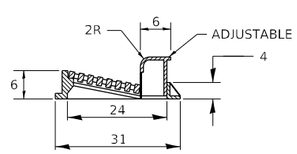

SECTION A-A

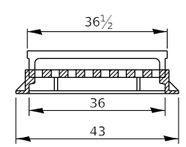

SECTION B-B

* THIS GRATE TO BE USED WITHOUT CURB BOX WHEN INLET IS IN DRIVEWAY.

ALL DIMENSIONS ARE IN INCHES UNLESS OTHERWISE NOTED.

REVISED - 1-05-16
REVISED - 6-27-14
REVISED - 10-13-11

FRAME AND GRATE FOR INLETS, SPECIAL

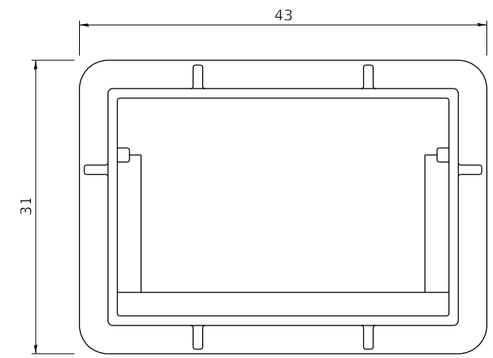

PLAN OF FRAME
WITHOUT GRATE AND CURB BOX

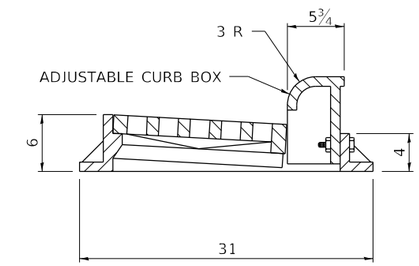

TRANSVERSE SECTION

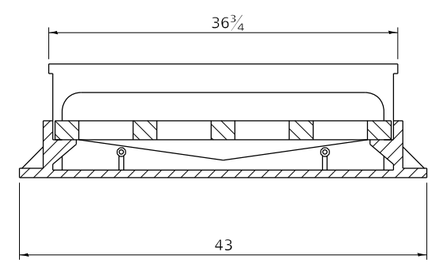

LONGITUDINAL SECTION

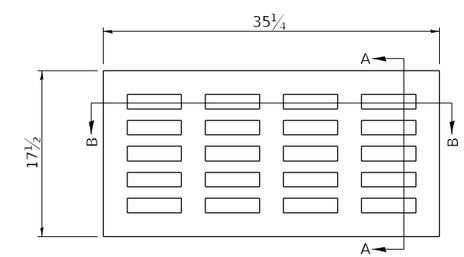

PLAN OF GRATE

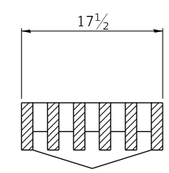

SECTION A-A

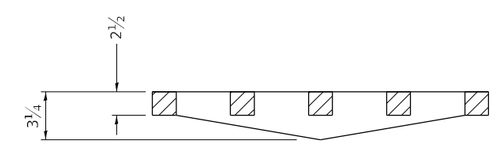

SECTION B-B

ALL DIMENSIONS ARE IN INCHES UNLESS OTHERWISE NOTED.

R 3246 OR EQUIVALENT
APPROXIMATE WEIGHT - 495 LBS.

REVISED - 6-27-14	REGION 2 / DISTRICT 2 STANDARD	F.A.P. RTE.	SECTION	COUNTY	TOTAL SHEETS / SHEET NO.
REVISED - 10-13-11		646	9R & 9RS-3	WHITESIDE	222 / 172
REVISED -				CONTRACT NO. 64D78	
REVISED -	SCALE: 100.0000 ' / in. SHEET OF SHEETS STA. TO STA.			ILLINOIS	FED. AID PROJECT

FILE NAME: pw:\\ildot-pw.bentley.com:PWIDOT\Documents\IDOT Offices\District 2\Projects\64D78\Program Development\Studies & Plans\Design\CADD\CADsheets\D2_64D78-sht-district standards.dgn
PLOT DATE = 10/22/2021

FRAME AND GRATE FOR INLETS, SPECIAL

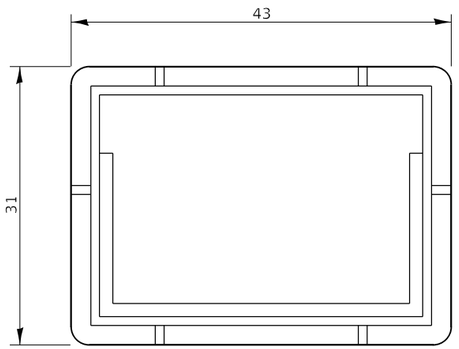

PLAN OF FRAME

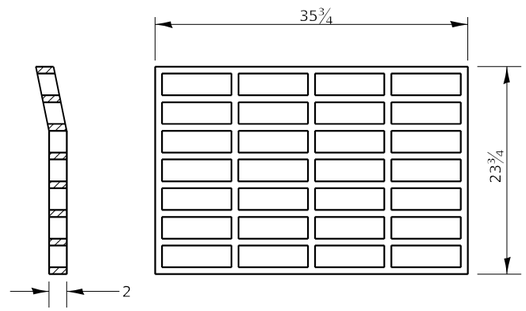

PLAN OF GRATE *

* THIS GRATE TO BE USED WITHOUT CURB BOX WHEN INLET IS IN DRIVEWAY.

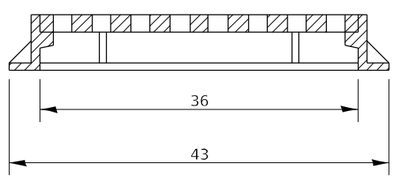

ALL DIMENSIONS ARE IN INCHES UNLESS OTHERWISE NOTED.

R-3290-A OR EQUIVALENT
APPROXIMATE WEIGHT OF CAST IRON FRAME & GRATE - 530 LBS.

REVISED - 4-14-15
REVISED - 6-27-14
REVISED - 10-14-11

PERMANENT SURVEY MARKERS, TYPE II

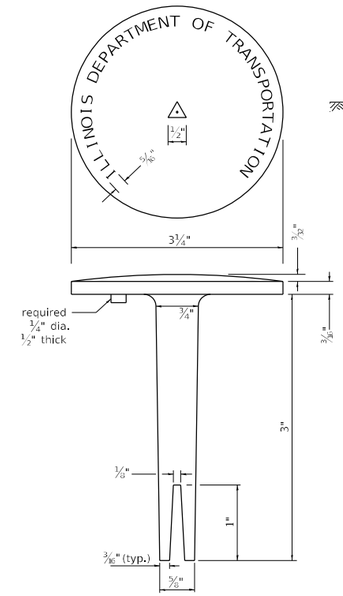

BRASS OR ALUMINUM TABLET

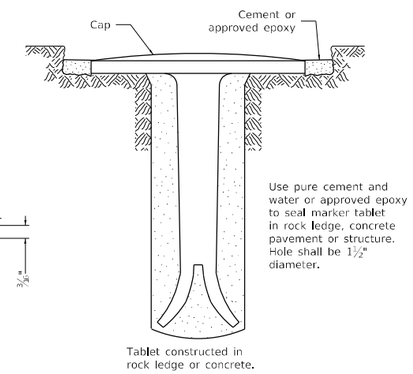

TYPE II

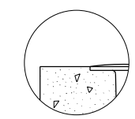

DETAIL A

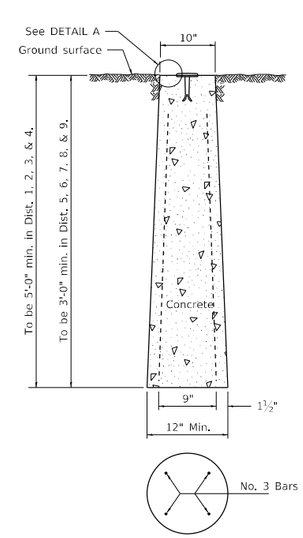

TYPE II

CAST-IN-PLACE MARKER

ALL DIMENSIONS ARE IN INCHES UNLESS OTHERWISE NOTED.

WITNESS MARKER FOR PERMANENT SURVEY MARKERS, TYPE II

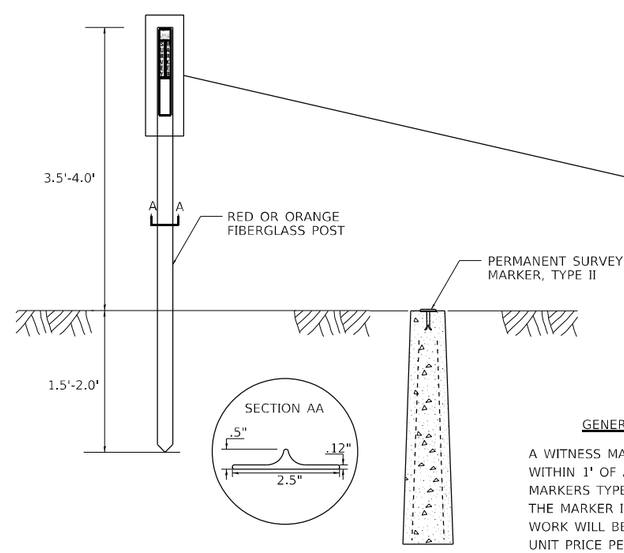

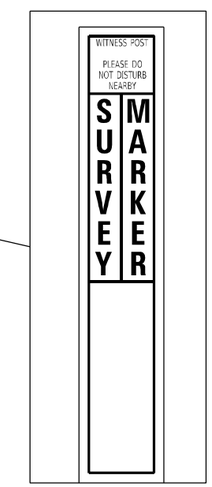

GENERAL NOTES

A WITNESS MARKER SHALL BE INSTALLED WITHIN 1' OF ALL PERMANENT SURVEY MARKERS TYPE II EXCEPT IN AREAS WHERE THE MARKER IS IN THE SIDEWALK. THIS WORK WILL BE INCLUDED TO THE CONTRACT UNIT PRICE PER EACH FOR PERMANENT SURVEY MARKERS, TYPE II.

REVISED - 6-27-14
REVISED - 10-14-11
REVISED -
REVISED -

REGION 2 / DISTRICT 2 STANDARD

SCALE: 100.0000 ' / in. SHEET OF SHEETS STA. TO STA.

F.A.P. RTE.	SECTION	COUNTY	TOTAL SHEETS	SHEET NO.
646	9R & 9RS-3	WHITESIDE	222	173
		CONTRACT NO. 64D78		
	ILLINOIS	FED. AID PROJECT		

FILE NAME: pw:\\ildot-pw.bentley.com:PWIDOT\Documents\IDOT Offices\District 2\Projects\64D78\Program Development\Studies & Plans\Design\CADD\CADsheets\D2_64D78-sht-district standards.dgn
PLOT DATE = 10/22/2021

TRAFFIC CONTROL AND PROTECTION AT TURN BAYS (TO REMAIN OPEN TO TRAFFIC)

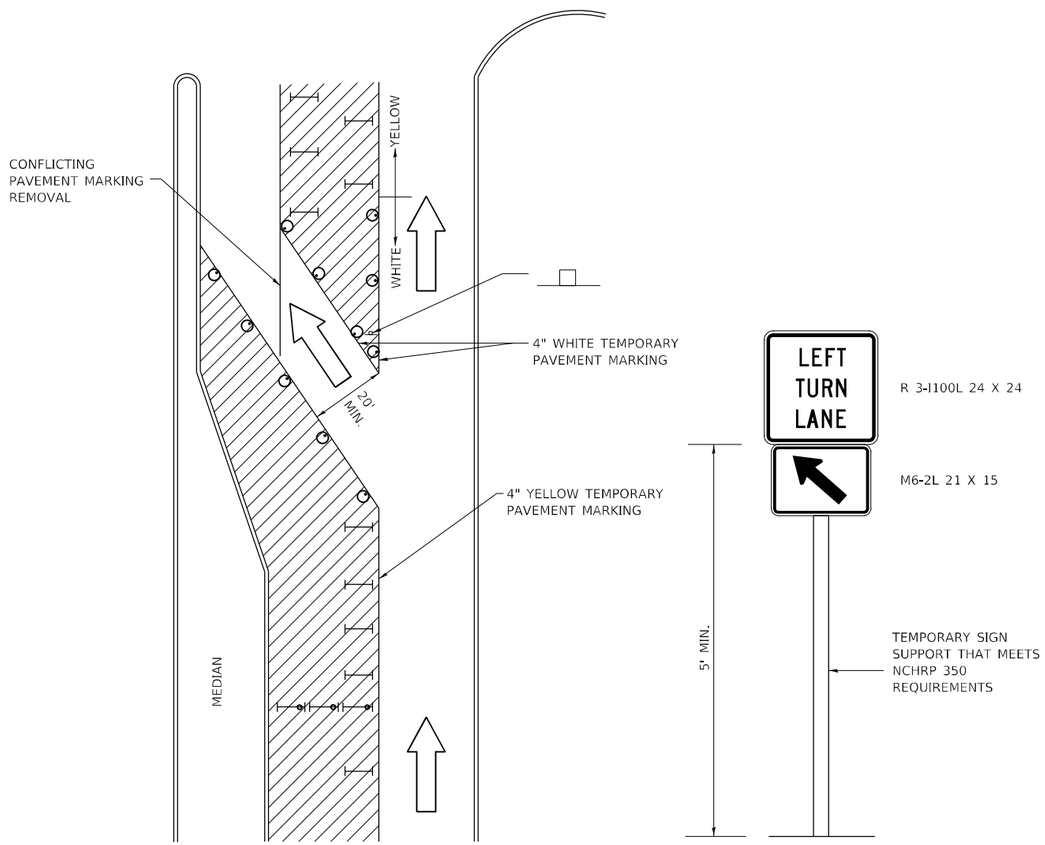

LEGEND

- WORK AREA
- LANE OPEN TO TRAFFIC
- TYPE I OR II BARRICADE OR DRUM WITH FLASHING BURNING LIGHT
- DRUM OR BARRICADE WITH STEADY BURN LIGHT
- SIGN (SEE DETAIL)
- TYPE I OR II CHECK BARRICADE WITH STEADY LIGHT BURN

REVISED - 10-14-11

GENERAL NOTES

CONES MAY BE SUBSTITUTED FOR BARRICADES OR DRUMS AT HALF THE SPACING DURING DAY OPERATIONS. CONES SHALL BE A MINIMUM OF 28 IN HEIGHT.

STEADY BURNING LIGHTS WILL NOT BE REQUIRED ON BARRICADES OR DRUMS FOR DAY OPERATIONS. ALL LIGHTS WILL BE MONODIRECTIONAL.

TEMPORARY PAVEMENT MARKING SHALL BE PLACED THROUGHOUT THE BARRICADED AREA OF EACH BAY WHERE THE CLOSURE TIME IS GREATER THAN FOURTEEN DAYS.

THIS APPLICATION ALSO APPLIES WHEN WORK IS BEING PERFORMED IN THE RIGHT LANE(S) AND THE RIGHT TURN BAY IS TO REMAIN OPEN. UNDER THIS CONDITION, "RIGHT TURN LANE" R3-100 24 X 24 AND M6-2R 21 X 15 SHALL BE USED.

THESE CONTROLS SHALL SUPPLEMENT MAINLINE TRAFFIC CONTROL FOR LANE CLOSURES. LONGITUDINAL DIMENSIONS MAY BE ADJUSTED TO FIT FIELD CONDITIONS.

TRAFFIC CONTROL AND PROTECTION AT TURN BAYS (TO REMAIN OPEN TO TRAFFIC) SHALL BE INCLUDED IN THE COST SPECIFIED TRAFFIC CONTROL STANDARDS OR ITEMS.

ALL DIMENSIONS ARE IN INCHES UNLESS OTHERWISE NOTED.

FILE NAME: pw:\\ildot-pw.bentley.com:PWIDOT\Documents\IDOT Offices\District 2\Projects\64D78\Program Development\Studies & Plans\Design\CADD\CADsheets\D2_64D78-sht-district standards.dgn
PLOT DATE = 10/22/2021

REVISED -	REGION 2 / DISTRICT 2 STANDARD	F.A.P. RTE.	SECTION	COUNTY	TOTAL SHEETS	SHEET NO.
REVISED -		646	9R & 9RS-3	WHITESIDE	222	174
REVISED -				CONTRACT NO. 64D78		
REVISED -	SCALE: 100.0000 ' / in SHEET OF SHEETS STA. TO STA.	ILLINOIS	FED. AID PROJECT			

PC CONCRETE ISLANDS AND MEDIANS ACCESSIBLE TO THE DISABLED

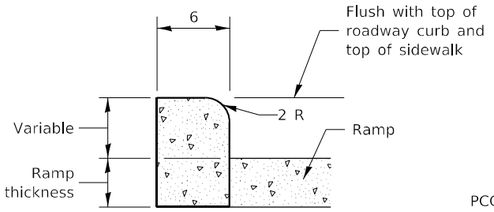

SIDE CURB DETAIL

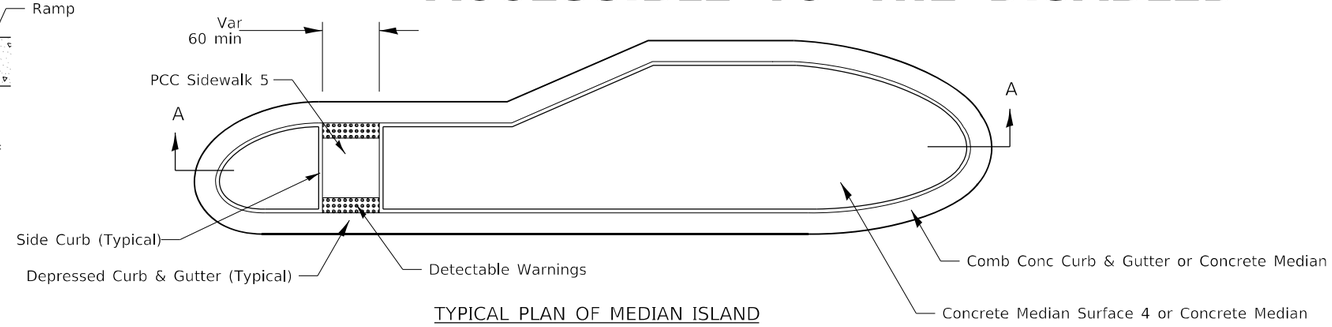

TYPICAL PLAN OF MEDIAN ISLAND

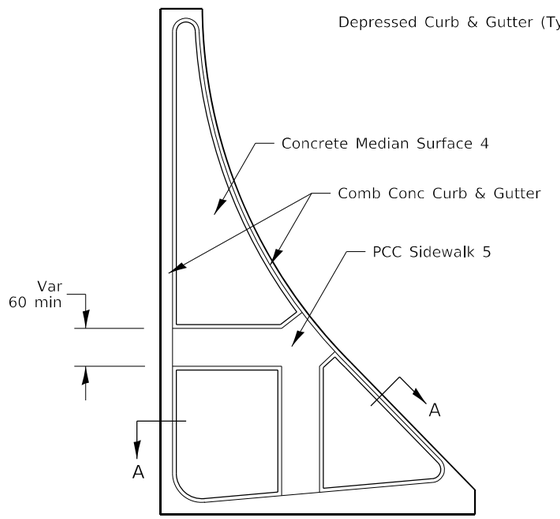

LARGE ISLAND

(Free Flow Design)

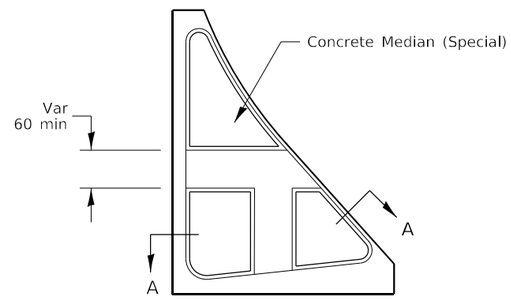

INTERMEDIATE ISLAND

(For Right Turn Lane Design)

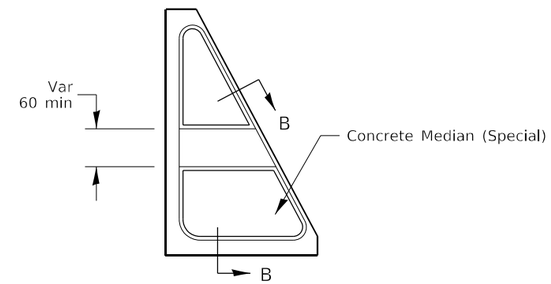

SMALL ISLAND

(For Typical Design)

SECTION A-A

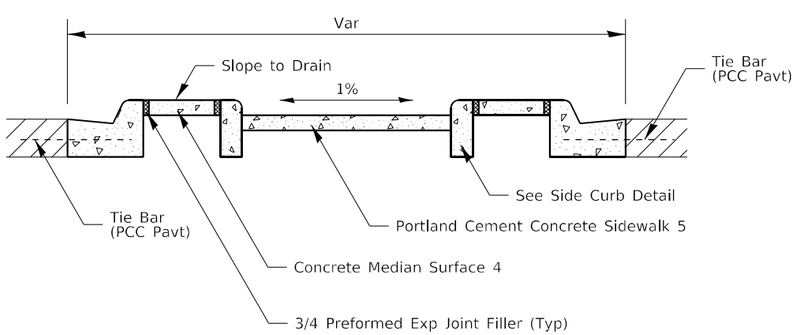

SECTION B-B

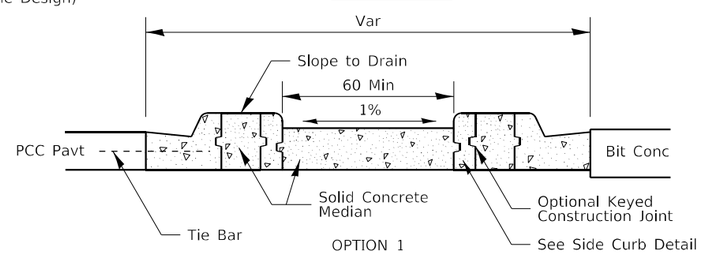

OPTION 1

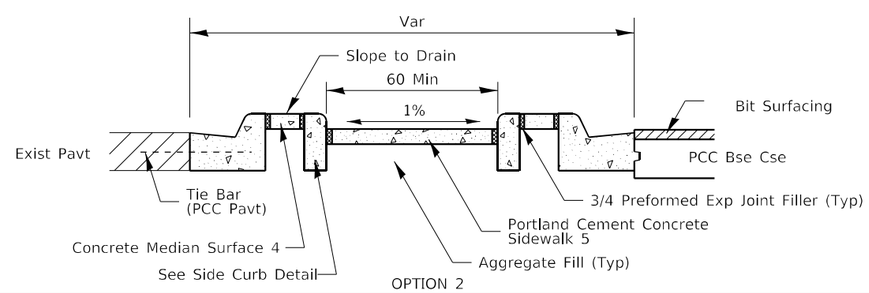

OPTION 2

General Notes:
See Standard 606301 and plan sheets for station & offsets, radii, dimensions, and details not shown.

See Standard 424031 for sidewalk details not shown.

The sidewalk should drain to the low side of the island. If necessary the sidewalk shall be sloped to drain at 1%.

See the plan general notes for the type of curb & gutter to be used on islands.

The sidewalk should not be closer than 36 from the corner of the island.

Keyed longitudinal construction joints shall be constructed without tie bars.

Medians and large islands shall consist of PCC Sidewalk 5, Concrete Median Surface 4, and Combination Concrete Curb & Gutter, Type M or B of the size specified. Median island can also be solid concrete medians.

Locations, layouts, and widths of the flush sidewalk area, shall be determined by the designer and shown on the plans.

The intermediate and small islands will be measured for payment from E.O.P. to E.O.P. using either option 1 or option 2, as specified in the plans, and will be paid for at the contract unit price per SQ FT for CONCRETE MEDIAN (SPECIAL) which shall include the combination curb & gutter, sidewalk, aggregate fill, concrete median surface, and solid concrete median.

Omit detectable warnings when distance between back of curbs is less than 6'.

ALL DIMENSIONS ARE IN INCHES UNLESS OTHERWISE NOTED.

FILE NAME: pw:\\ildot-pw.bentley.com:PWIDOT\Documents\IDOT Offices\District 2\Projects\64D78\Program Development\Studies & Plans\Design\CADD\CADsheets\sht-district 1405-16.dgn	USER NAME = hogenson\d	DESIGNED -	REVISED - 4-16-19
		DRAWN -	REVISED - 10-15-16
	PLOT SCALE = 100.0000 ' / in.	CHECKED -	REVISED - 6-27-14
	PLOT DATE = 10/22/2021	DATE -	REVISED - 8-27-13

STATE OF ILLINOIS
DEPARTMENT OF TRANSPORTATION

REGION 2 / DISTRICT 2 STANDARD

SCALE: | SHEET OF SHEETS | STA. TO STA.

F.A.P. RTE.	SECTION	COUNTY	TOTAL SHEETS	SHEET NO.
646	9R & 9RS-3	WHITESIDE	222	175

CONTRACT NO. 64D78

ILLINOIS | FED. AID PROJECT

HOT–MIX ASPHALT APPROACHES AND MAILBOX RETURNS

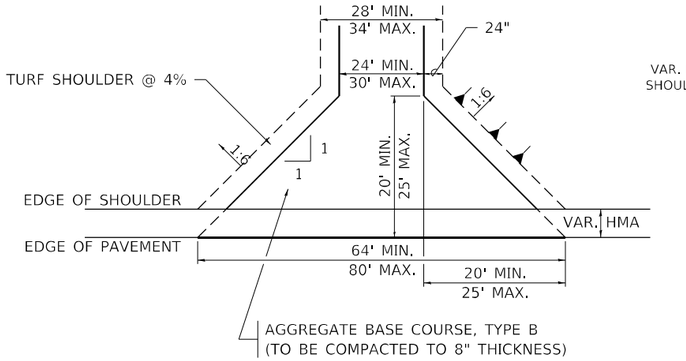

FIELD ENTRANCE

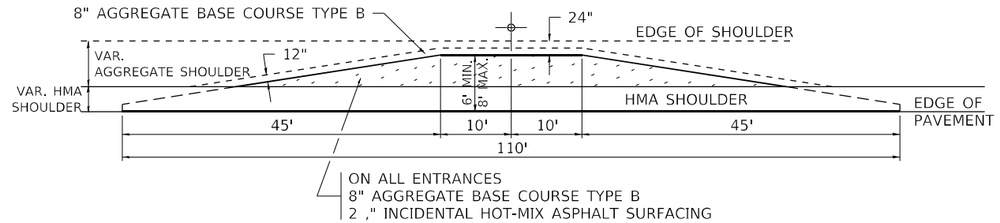

MAILBOX TURNOUT

NOTE

1. TURNOUTS ARE TO BE CONSTRUCTED ON THE APPROACH SIDE OF ALL PE & CE REGARDLESS IF A MAILBOX IS PRESENT.
2. ALL PE & CE ARE TO BE SURFACED TO RIGHT OF WAY LINE. AREA BEHIND RIGHT OF WAY SHALL MATCH EXISTING SURFACE.
3. ALL PE & CE TO BE CONSTRUCTED WITH AN 8" AGGREGATE BASE COURSE, TYPE B AND WITH A 2 ¼" INCIDENTAL HOT-MIX ASPHALT SURFACING, UNLESS OTHERWISE NOTED.
4. FE ARE TO BE AGGREGATE TO RIGHT OF WAY OR TOUCH DOWN, WHICH EVER IS GREATEST.
5. EXCAVATION REQUIRED FOR PLACEMENT OF AGGREGATE BASE COURSE SHALL BE INCLUDED IN THE COST OF THE AGGREGATE BASE COURSE.
6. ON ENTRANCES THE CONTRACTOR HAS THE OPTION OF USING RADIUS RETURNS. USE RADII OF 20' TO 60'.
7. SIDE ROADS SHALL HAVE 3" INCIDENTAL PLACED IN TWO 1½" LIFTS.

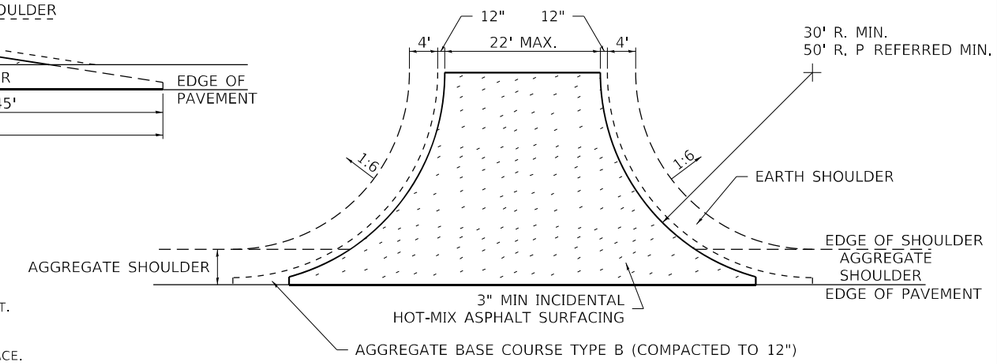

SIDE ROAD RETURN/EARTH SHOULDER

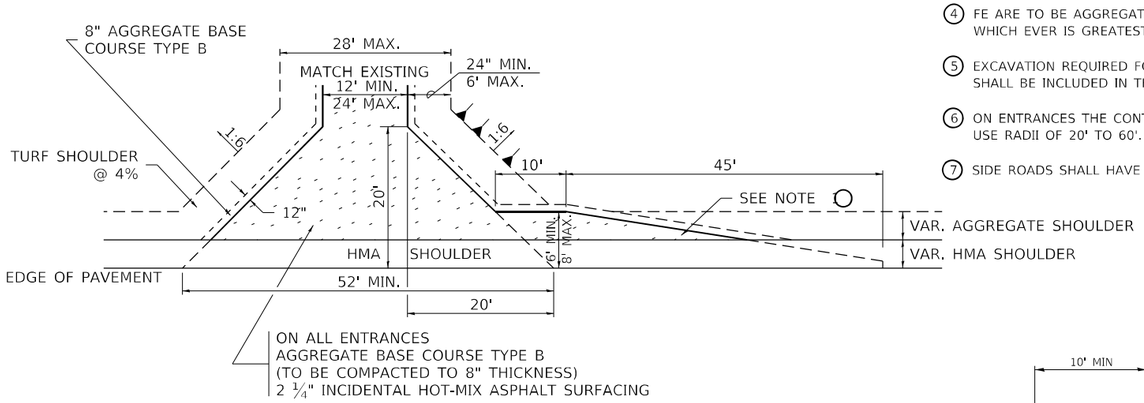

PRIVATE ENTRANCE

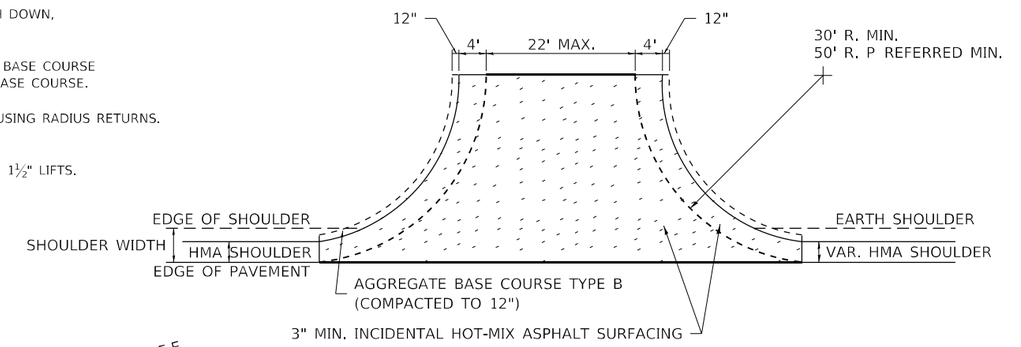

SIDE ROAD RETURN/HMA SHOULDER

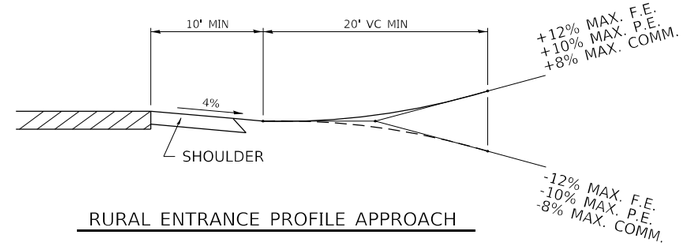

RURAL ENTRANCE PROFILE APPROACH

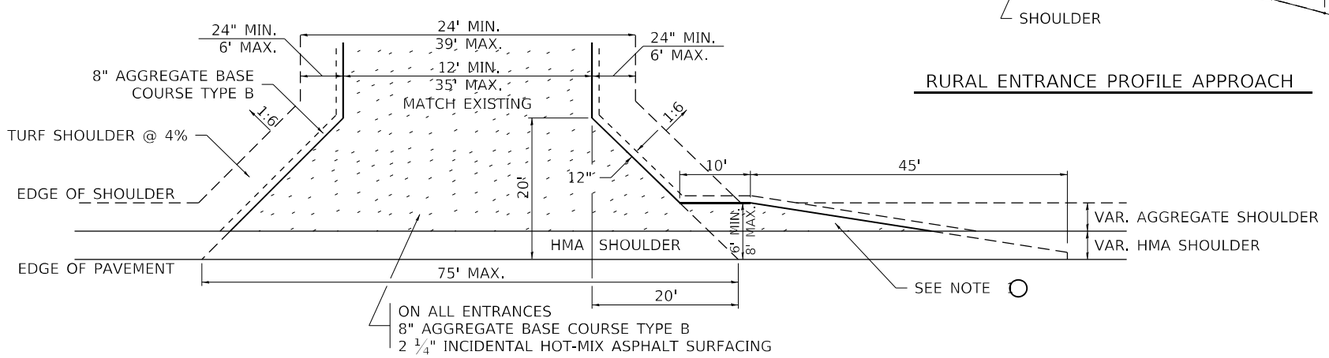

COMMERCIAL ENTRANCE

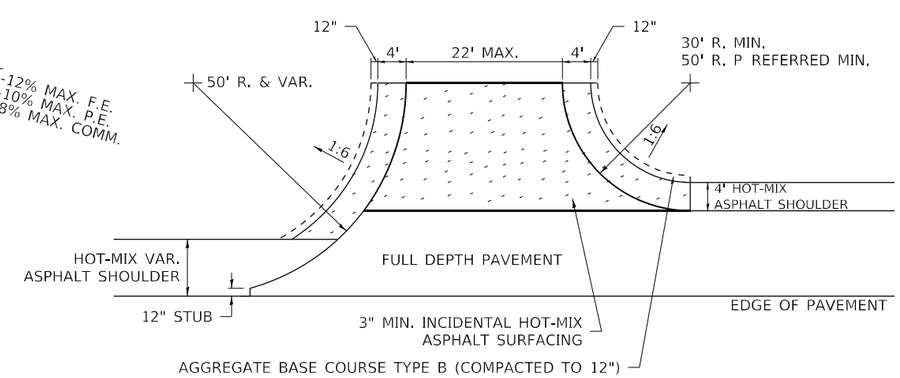

SIDE ROAD RETURN WITH RIGHT TURN LANE

FILE NAME: pw:\\ildot-pw.bentley.com:PWIDOT\Documents\IDOT Offices\District 2\Projects\64D78\Program Development\Studies & Plans\Design\CADD\CADsheets\64d78-sht-district1-hma-01.dgn	USER NAME = hogensonjd	DESIGNED -	REVISED - 8-03-17	STATE OF ILLINOIS DEPARTMENT OF TRANSPORTATION	REGION 2 / DISTRICT 2 STANDARD	F.A.P. RTE.	SECTION	COUNTY	TOTAL SHEETS	SHEET NO.
		DRAWN -	REVISED - 12-13-17			646	9R & 9RS-3	WHITESIDE	222	176
	PLOT SCALE = 100.0000 ' / in.	CHECKED -	REVISED - 6-27-14					CONTRACT NO. 64D78		
	PLOT DATE = 10/22/2021	DATE -	REVISED - 8-27-13		SCALE: SHEET OF SHEETS STA. TO STA.		ILLINOIS	FED. AID PROJECT		

ENTRANCE APPROACHES – URBAN AREA

ENTRANCE ON RADIUS

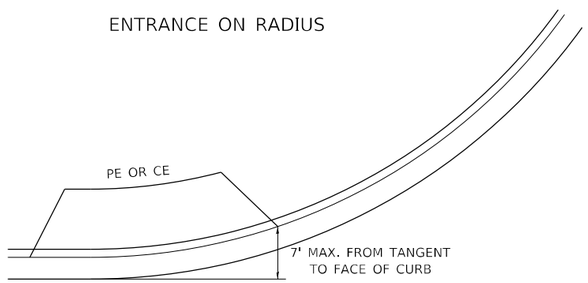

PRIVATE ENTRANCE

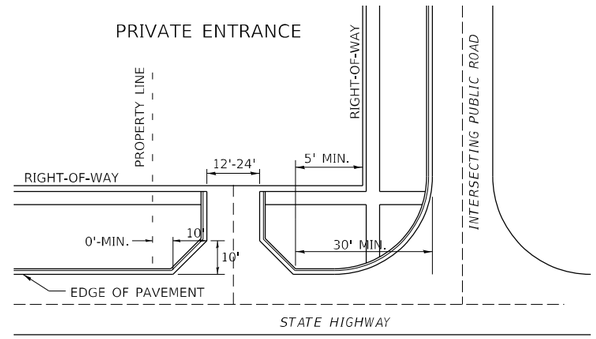

INDUSTRIAL-COMMERCIAL-RECREATIONAL
HIGH-VOLUME TRAFFIC GENERATOR

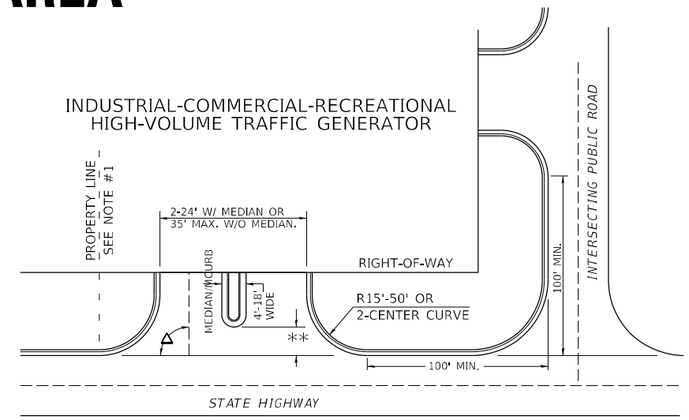

A MINIMUM OF 440 FEET SHALL BE MAINTAINED BETWEEN CENTER LINES OF ADJACENT DRIVEWAYS.

Δ 90° DESIRABLE, 45° MIN. ANGLE PERMITTED ONLY FOR ONE-WAY DRIVEWAYS.
60° MIN. ANGLE FOR TWO-WAY DRIVEWAYS.

NOTE: #1 ENCROACHMENT ON THE ADJACENT PROPERTY OWNER LAND REQUIRES HIS OR HER WRITTEN APPROVAL.

** 4'-10' IF HIGHWAY CURBED.
AT EDGE OF SHOULDER IF HIGHWAY UNCURBED.

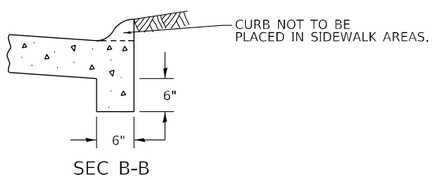

SEC B-B

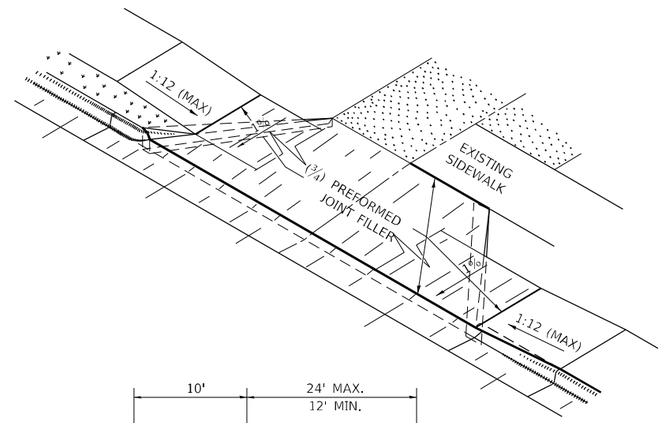

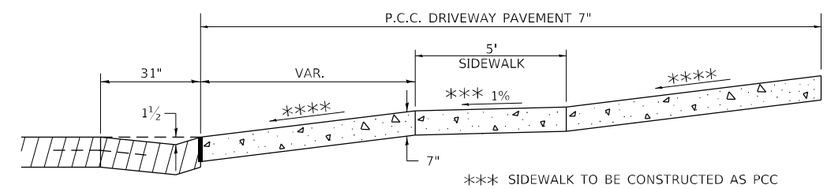

ASCENDING APPROACH

*** SIDEWALK TO BE CONSTRUCTED AS PCC DRIVEWAY PAVEMENT 7" THROUGH THE WIDTH OF THE DRIVEWAY. SEE DIST. STD. 35.4

**** 4.0% DESIRABLE
6.0% MAX. COMMERCIAL
8.0% MAX. NON-COMMERCIAL

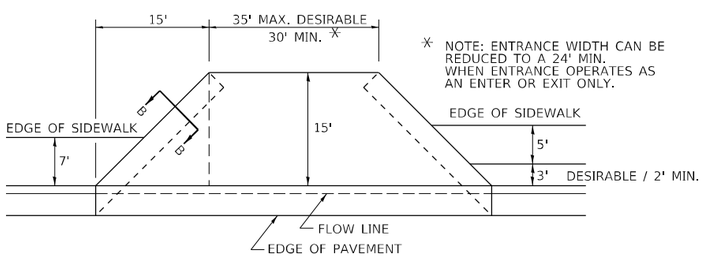

* NOTE: ENTRANCE WIDTH CAN BE REDUCED TO A 24' MIN. WHEN ENTRANCE OPERATES AS AN ENTER OR EXIT ONLY.

LOW TO MODERATE VOLUME COMMERCIAL ENTRANCE

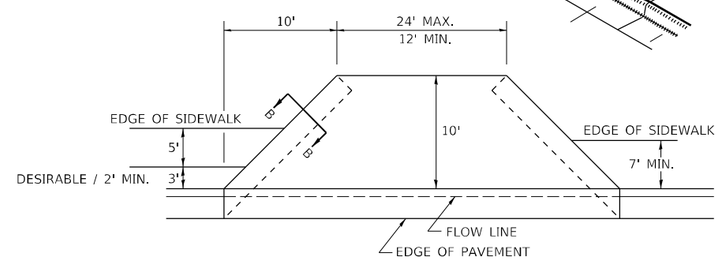

PRIVATE ENTRANCE

NOTE: CURVED ENTRANCE RETURNS MAY BE USED FOR LOW TO MODERATE VOLUME LOCATIONS WITH REVIEW ON A CASE-BY-CASE BASIS.

DESCENDING APPROACH
(NO SIDEWALK)

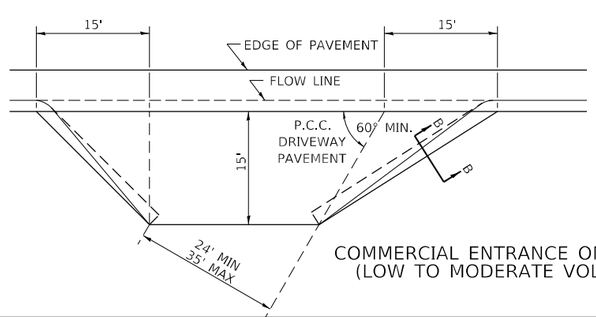

COMMERCIAL ENTRANCE ON SKEW
(LOW TO MODERATE VOLUME)

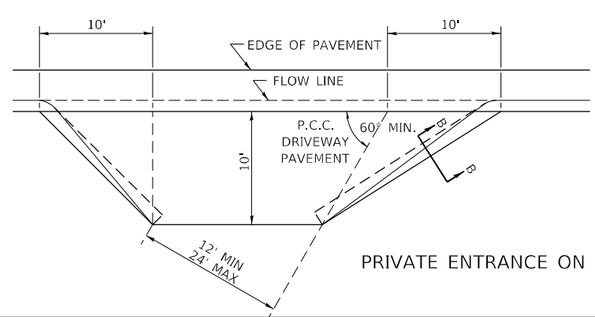

PRIVATE ENTRANCE ON SKEW

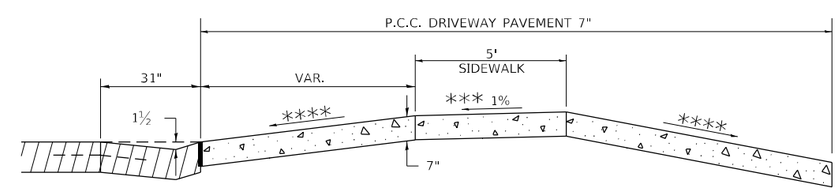

DESCENDING APPROACH
(WITH SIDEWALK)

FILE NAME: pw:\\ildot-pw.bentley.com:PWIDOT\Documents\IDOT Offices\District 2\Projects\64D78\Program Development\Studies & Plans\Design\CADD\CADsheets\64D78-sht-district-standards.dgn	USER NAME = hogensonjd	DESIGNED -	REVISED - 7-19-18
		DRAWN -	REVISED - 1-03-18
	PLOT SCALE = 100.0000 ' / in.	CHECKED -	REVISED - 6-27-14
	PLOT DATE = 10/22/2021	DATE -	REVISED - 12-07-10

STATE OF ILLINOIS
DEPARTMENT OF TRANSPORTATION

REGION 2 / DISTRICT 2 STANDARD

SCALE: SHEET OF SHEETS STA. TO STA.

F.A.P. RTE.	SECTION	COUNTY	TOTAL SHEETS	SHEET NO.
646	9R &9RS-3	WHITESIDE	222	177
		CONTRACT NO. 64D78		
	ILLINOIS	FED. AID PROJECT		

SEWER AND WATER MAIN CROSSINGS

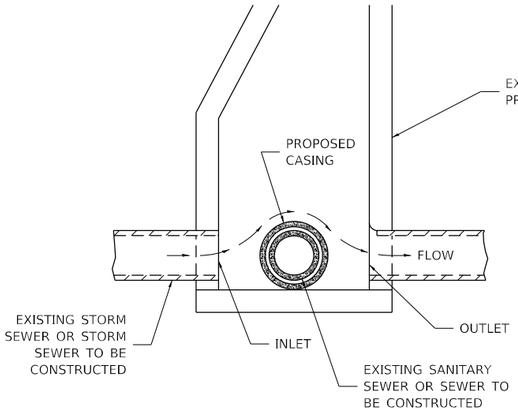

ELEVATION - ECCENTRIC

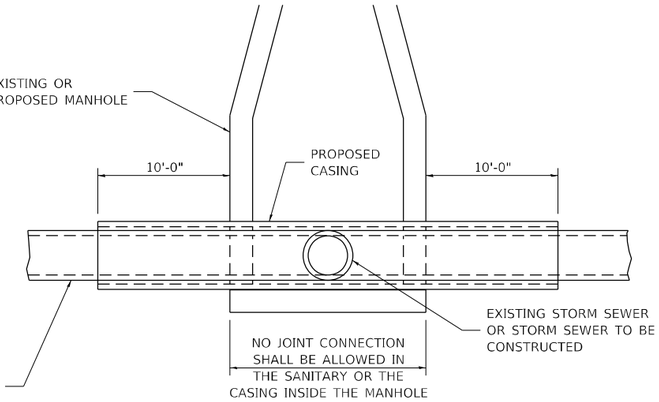

ELEVATION - CONCENTRIC

CASING SHALL BE CAST IRON WITH AN INSIDE DIAMETER 2" LARGER IN DIAMETER THAN ENCASED PIPE OUTSIDE DIAMETER WITH BOTH ENDS OF CASING SEALED

AT GRADE CROSSING OF SANITARY AND STORM SEWER

ALL DIMENSIONS ARE IN INCHES UNLESS OTHERWISE NOTED

THIS DETAIL IS FOR UNKNOWN UTILITIES UNLESS QUANTITIES ARE INCLUDED IN THE PLANS THE EXTRA WORK WILL BE PAID FOR IN ACCORDANCE WITH ARTICLE 109.04.

WHEN PROPOSED SEWER (OR WATER) IS LOCATED 10'-0" OR MORE FROM EXISTING WATER (OR SEWER) NO SPECIAL CONSTRUCTION REQUIRED.

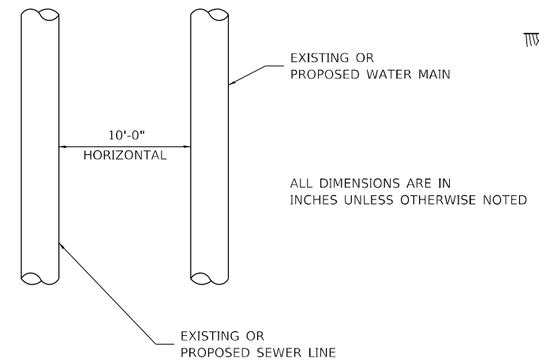

PLAN VIEW

WHEN PROPOSED SEWER (OR WATER) IS LOCATED LESS THAN 10'-0" FROM EXISTING WATER (OR SEWER) DETAILS BELOW SHALL APPLY.

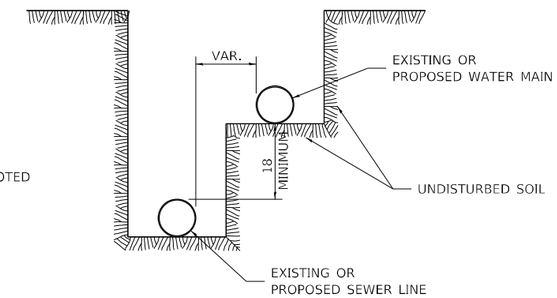

WATER AND SEWER HORIZONTAL SEPARATION REQUIREMENTS

POINT LOADS SHALL NOT BE ALLOWED BETWEEN SEWER OR SEWER CASING AND WATER MAIN

PROVIDE ADEQUATE SUPPORT FOR EXISTING WATER MAIN TO PREVENT DAMAGE DUE TO SETTLEMENT OF SEWER TRENCH

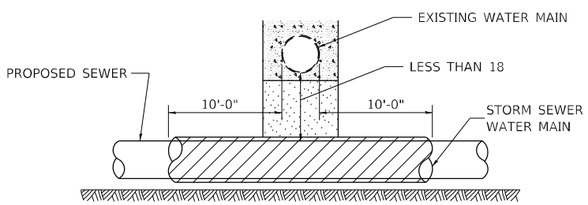

PROVIDE ADEQUATE SUPPORT FOR EXISTING WATER MAIN TO PREVENT DAMAGE DUE TO SETTLEMENT OF SEWER TRENCH

MAINTAIN 18 MINIMUM VERTICAL SEPARATION FOR 10 FT. HORIZONTALLY

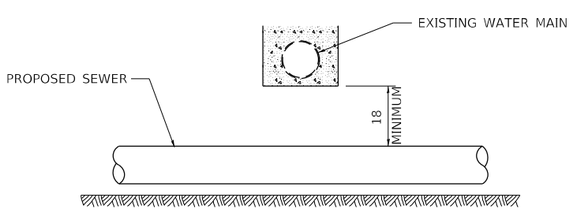

ALL DIMENSIONS ARE IN INCHES UNLESS OTHERWISE NOTED

PROPOSED SEWER LINE BELOW EXISTING WATER MAIN

PROVIDE ADEQUATE SUPPORT FOR EXISTING SEWER LINE TO PREVENT DAMAGE DUE TO SETTLEMENT

PLACE TRENCH BACKFILL FOR 10 FT. ON EITHER SIDE OF SEWER LINE

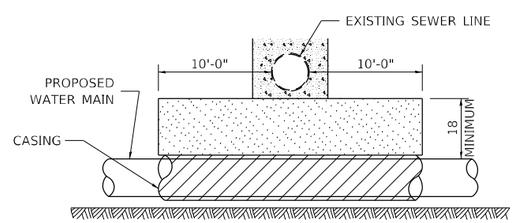

CASING SHALL BE CAST IRON WITH AN INSIDE DIAMETER 2" LARGER IN DIAMETER THAN ENCASED PIPE OUTSIDE DIAMETER WITH BOTH ENDS OF CASING SEALED

PROVIDE ADEQUATE SUPPORT FOR EXISTING WATER MAIN TO PREVENT DAMAGE DUE TO SETTLEMENT OF SEWER TRENCH

MAINTAIN 18 MINIMUM VERTICAL SEPARATION FOR 10 FT. HORIZONTALLY

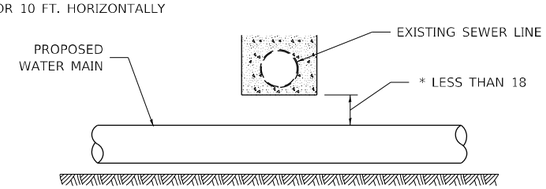

* NOT ALLOWED
MUST MAINTAIN 18 VERTICAL SEPARATION

ALL DIMENSIONS ARE IN INCHES UNLESS OTHERWISE NOTED

PROPOSED WATER MAIN BELOW EXISTING SEWER LINE

POINT LOADS SHALL NOT BE ALLOWED BETWEEN WATER MAIN OR WATER MAIN CASING AND SEWER

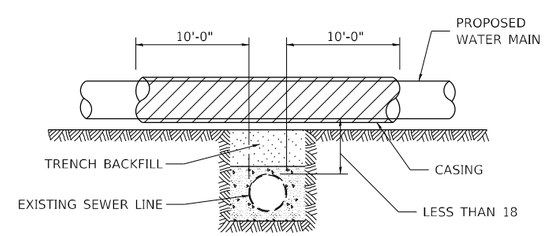

CASING SHALL BE CAST IRON WITH AN INSIDE DIAMETER 2" LARGER IN DIAMETER THAN ENCASED PIPE OUTSIDE DIAMETER WITH BOTH ENDS OF CASING SEALED

ALL DIMENSIONS ARE IN INCHES UNLESS OTHERWISE NOTED

PROPOSED WATER MAIN ABOVE EXISTING SEWER LINE

PROVIDE ADEQUATE SUPPORT FOR SEWER TO PREVENT SETTLING AND BREAKING THE WATER MAIN.

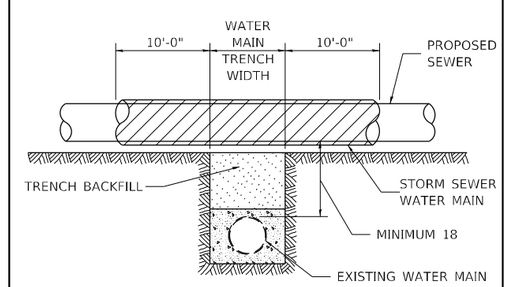

ALL DIMENSIONS ARE IN INCHES UNLESS OTHERWISE NOTED

EXISTING WATER MAIN BELOW PROPOSED SEWER LINE WITH MINIMUM 18 VERTICAL SEPARATION

FILE NAME: pw:\\ildot-pw.bentley.com:PWIDOT\Documents\IDOT Offices\District 2\Projects\64D78\Program Development\Studies & Plans\Design\CADD\CADsheets\64d78-sht-district standards.dgn	USER NAME = hogenson\d	DESIGNED -	REVISED - 10-17-11
		DRAWN -	REVISED -
	PLOT SCALE = 100.0000 ' / in.	CHECKED -	REVISED -
	PLOT DATE = 10/22/2021	DATE -	REVISED -

STATE OF ILLINOIS
DEPARTMENT OF TRANSPORTATION

REGION 2 / DISTRICT 2 STANDARD

SCALE: | SHEET OF SHEETS | STA. TO STA.

F.A.P. RTE.	SECTION	COUNTY	TOTAL SHEETS	SHEET NO.
646	9R & 9RS-3	WHITESIDE	222	178
		CONTRACT NO. 64D78		
		ILLINOIS FED. AID PROJECT		

WORK ZONE SIGN DETAILS

ILLINOIS STANDARD G20–I100

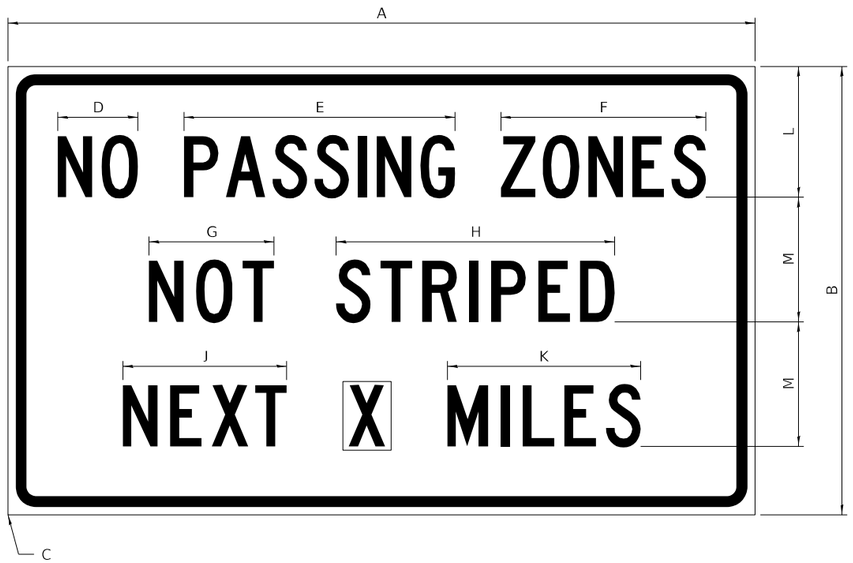

COLOR	LEGEND AND BORDER	BLACK	NON-REFLECTORIZED
	BACKGROUND	ORANGE	REFLECTORIZED

SIGN SIZE	DIMENSIONS											
	A	B	C	D	E	F	G	H	J	K	L	M
60 x 36	60.00	36.00	2.25	6.4	21.80	16.40	10.00	22.40	13.20	15.50	10.50	10.00

SIGN SIZE	SERIES BY LINE			MARGIN	BORDER
	1	2	3		
60 x 36	5C	5C	5C	0.625	0.875

Sign not to scale

GENERAL NOTES

All work to furnish and install these signs shall be included in the cost of the specified traffic control standards and shall not be paid separately.

All Illinois Standard signs shall conform to the latest edition of the "Illinois Standard Highway Signs Book" in effect on the date of invitation for bids.

Signs shall meet the applicable portions of Sections 701 and 720 of the Standard Specifications.

All dimensions are in inches unless otherwise noted.

ILLINOIS STANDARD W8–I107

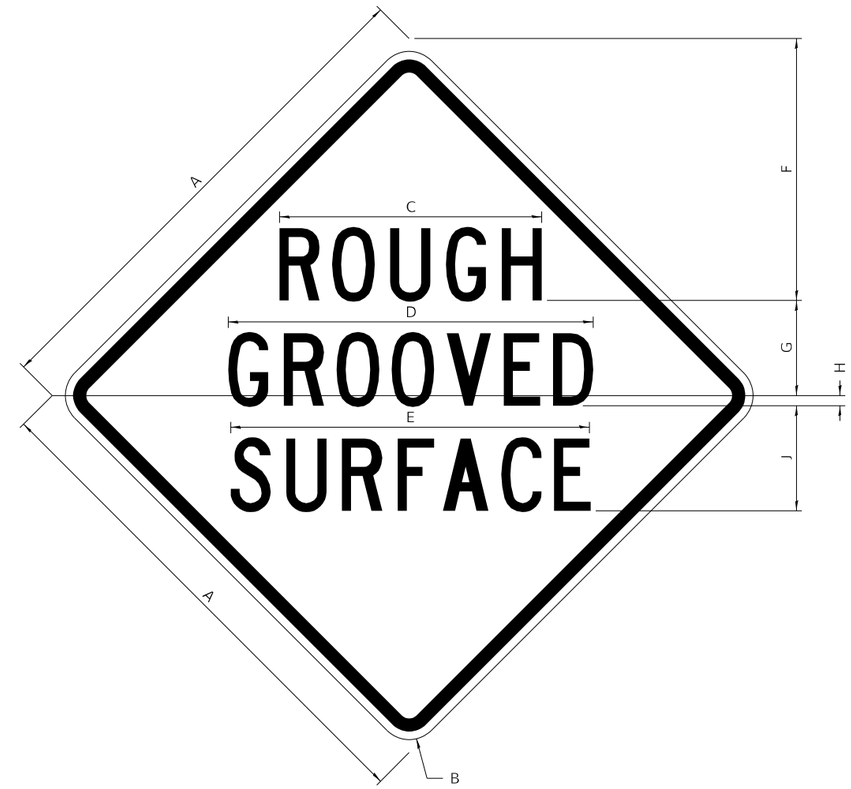

COLOR	LEGEND AND BORDER	BLACK	NON-REFLECTORIZED
	BACKGROUND	ORANGE	REFLECTORIZED

SIGN SIZE	DIMENSIONS								
	A	B	C	D	E	F	G	H	J
48 x 48	48.00	3.00	25.00	34.80	34.20	24.94	9.00	1.00	10.00

SIGN SIZE	SERIES BY LINE			MARGIN	BORDER
	1	2	3		
48 x 48	7C	7C	7C	1.250	0.750

Sign not to scale

WORK ZONE SIGN DETAILS

ILLINOIS STANDARD W12–I102

1

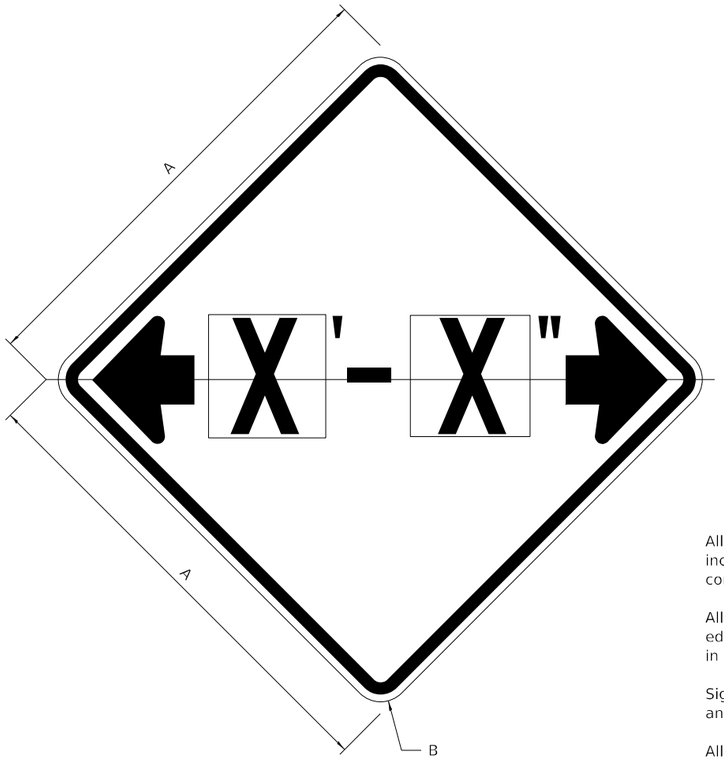

COLOR			
	LEGEND AND BORDER	BLACK	NON-REFLECTORIZED
	BACKGROUND	FL ORANGE	REFLECTORIZED

SIGN SIZE	DIMENSIONS	
	A	B
48 x 48	48.00	3.00

SIGN SIZE	SERIES BY LINE	MARGIN	BORDER
	1		
48 x 48	12C	0.750	1.250

Sign not to scale

GENERAL NOTES

All work to furnish and install these signs shall be included in the cost of the specified traffic control standards and shall not be paid separately.

All Illinois Standard signs shall conform to the latest edition of the "Illinois Standard Highway Signs Book" in effect on the date of invitation for bids.

Signs shall meet the applicable portions of Sections 701 and 720 of the Standard Specifications.

All dimensions are in inches unless otherwise noted.

(1) Illinois Standard signs W12-I102 and W12-I103 shall be used as described in the special provisions.

ILLINOIS STANDARD W12–I103

1

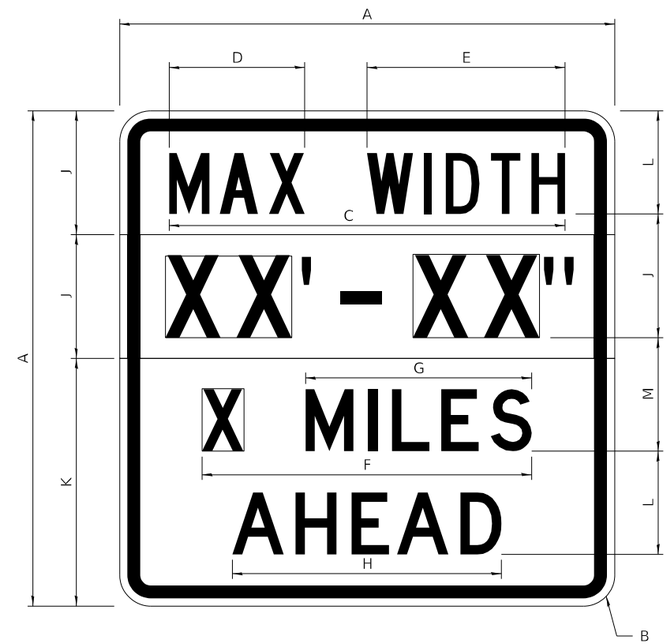

COLOR			
	LEGEND AND BORDER	BLACK	NON-REFLECTORIZED
	BACKGROUND	WHITE	REFLECTORIZED
	BACKGROUND (WIDTH)	FL ORANGE	REFLECTORIZED

SIGN SIZE	DIMENSIONS											
	A	B	C	D	E	F	G	H	J	K	L	M
48 x 48	48.00	3.00	38.40	13.20	19.20	32.00	22.00	26.20	12.00	24.00	10.00	11.00

SIGN SIZE	SERIES BY LINE				MARGIN	BORDER
	1	2	3	4		
48 x 48	6C	8D	6D	6D	0.750	1.250

Sign not to scale

XX'-XX" WIDTH AND X MILES ARE VARIABLE
TOP AND BOTTOM OF BACKGROUND WHITE

WORK ZONE SIGN DETAILS

ROAD CLOSED TO OVERSIZED LOADS

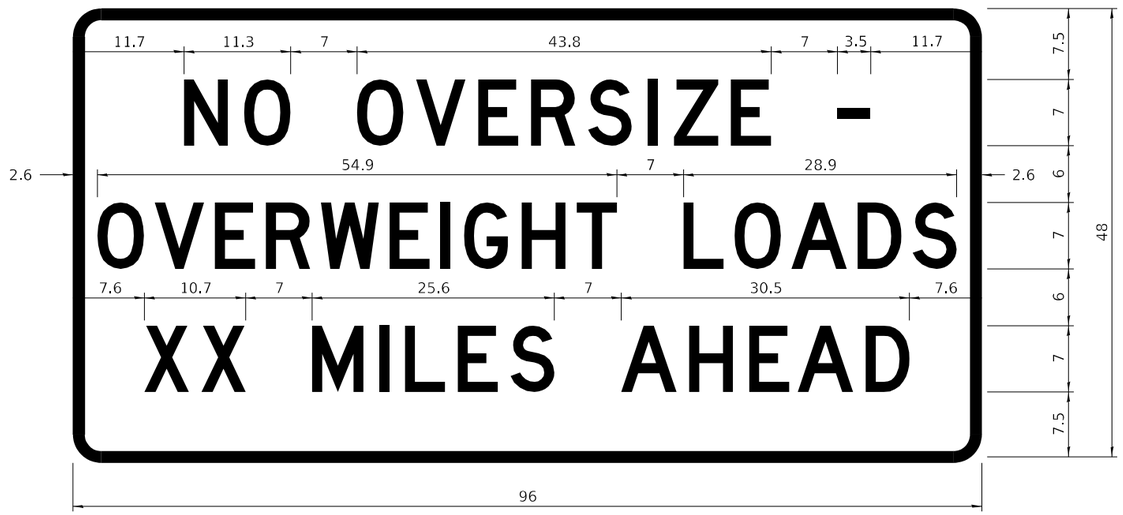

COLOR	LEGEND AND BORDER	BLACK	NON-REFLECTORIZED
	BACKGROUND	ORANGE	REFLECTORIZED

Permit Loads - Loads Over 13 Feet; 3.0" Radius, 1.3" Border;
[NO OVERSIZE -] D; [OVERWEIGHT LOADS] D 85% spacing; [XX MILES AHEAD] D;
Table of letter and object lefts.

N	O	O	V	E	R	S	I	Z	E	-
11.7	18.1	30.0	36.2	42.8	48.4	54.4	60.7	63.5	69.5	80.8

O	V	E	R	W	E	I	G	H	T	L	O	A	D	S
2.6	8.6	15.0	20.4	26.2	33.4	38.8	41.3	47.4	53.2	64.5	69.9	75.9	82.9	88.7

X	X	M	I	L	E	S	A	H	E	A	D
7.6	13.6	25.3	32.3	35.1	40.6	46.2	57.9	65.1	71.4	76.6	83.7

Sign not to scale

STOP LINE SIGN FOR TEMPORARY SIGNALS

COLOR	LEGEND AND BORDER	BLACK	NON-REFLECTORIZED
	BACKGROUND	WHITE	REFLECTORIZED

SIGN SIZE	SERIES BY LINE		
	1	2	3
24 x 24	4C	4C	4C

Sign not to scale

GENERAL NOTES

All work to furnish and install these signs shall be included in the cost of the specified traffic control standards and shall not be paid separately.

All Illinois Standard signs shall conform to the latest edition of the "Illinois Standard Highway Signs Book" in effect on the date of invitation for bids.

Signs shall meet the applicable portions of Sections 701 and 720 of the Standard Specifications.

All dimensions are in inches unless otherwise noted.

WORK ZONE SIGN DETAILS

ENTRANCE SIGN FOR USE WITH TEMPORARY SIGNALS

(2)

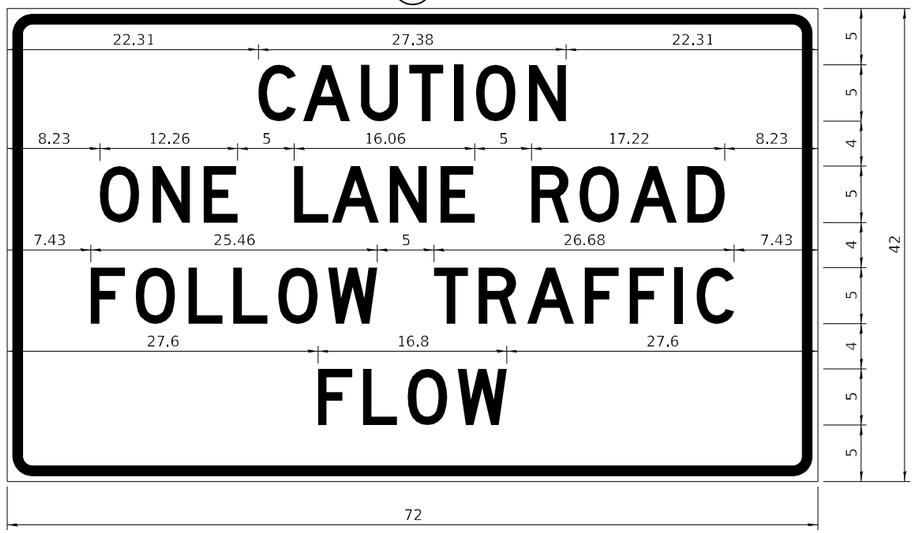

COLOR	LEGEND AND BORDER	BLACK	NON-REFLECTORIZED
	BACKGROUND	ORANGE	REFLECTORIZED

2.25" Radius, 0.88" Border, 0.50" IndenT;
[CAUTION] D; [ONE LANE ROAD] D;
[FOLLOW TRAFFIC] D; [FLOW] D

(2) This sign shall be installed at entrances located between the temporary signals as shown in the staging plans.

Table Of Widths And Spaces

22.31	C 3.36	0.62	A 4.18	0.94	U 3.36	0.94	T 3.04	0.94	I 0.78	1.17	O 3.52	1.17	N 3.36	22.31

8.23	O 3.51	1.17	N 3.36	1.18	E 3.04

5.00	L 3.05	0.31	A 4.18	0.94	N 3.36	1.17	E 3.05

5.00	R 3.36	0.93	O 3.52	0.94	A 4.18	0.93	D 3.36	8.23

7.43	F 3.04	0.94	O 3.52	1.17	L 3.04	0.94	L 3.05	0.94	O 3.51	0.94	W 4.37

5.00	T 3.05	0.94	R 3.36	0.94	A 4.18	0.93	F 3.05	0.94	F 3.04	0.94	I 0.78	1.18	C 3.35	7.43

27.60	F 3.05	0.94	L 3.04	0.94	O 3.52	0.93	W 4.38	27.60

Sign not to scale

GENERAL NOTES

All work to furnish and install these signs shall be included in the cost of the specified traffic control standards and shall not be paid separately.

All Illinois Standard signs shall conform to the latest edition of the "Illinois Standard Highway Signs Book" in effect on the date of invitation for bids.

Signs shall meet the applicable portions of Sections 701 and 720 of the Standard Specifications.

All dimensions are in inches unless otherwise noted.

STAY IN YOUR LANE

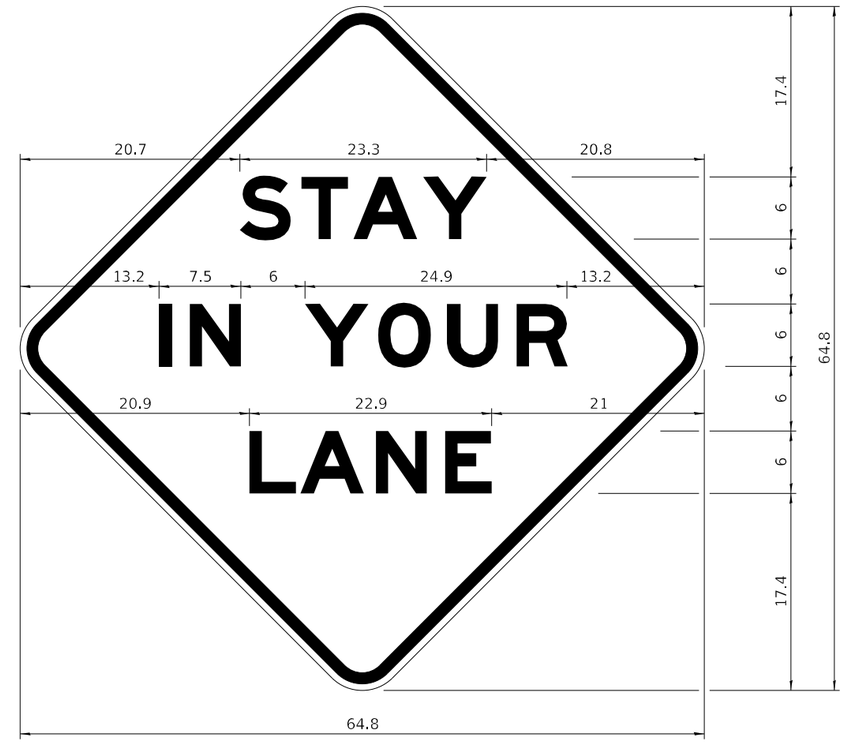

COLOR	LEGEND AND BORDER	BLACK	NON-REFLECTORIZED
	BACKGROUND	ORANGE	REFLECTORIZED

48.0" across sides 3.8" Radius, 1.0" Border, 0.6" Indent;
"STAY" E Mod; "IN YOUR" E Mod; "LANE" E Mod;

Table of Letter and Object Lefts

S 20.7	T 26.8	A 31.6	Y 38.0

I 13.2	N 15.9	Y 26.7	O 33.9	U 40.5	R 46.8

L 20.9	A 25.8	N 33.1	E 39.4

Sign not to scale

TRAFFIC CONTROL FOR ROAD CLOSURE

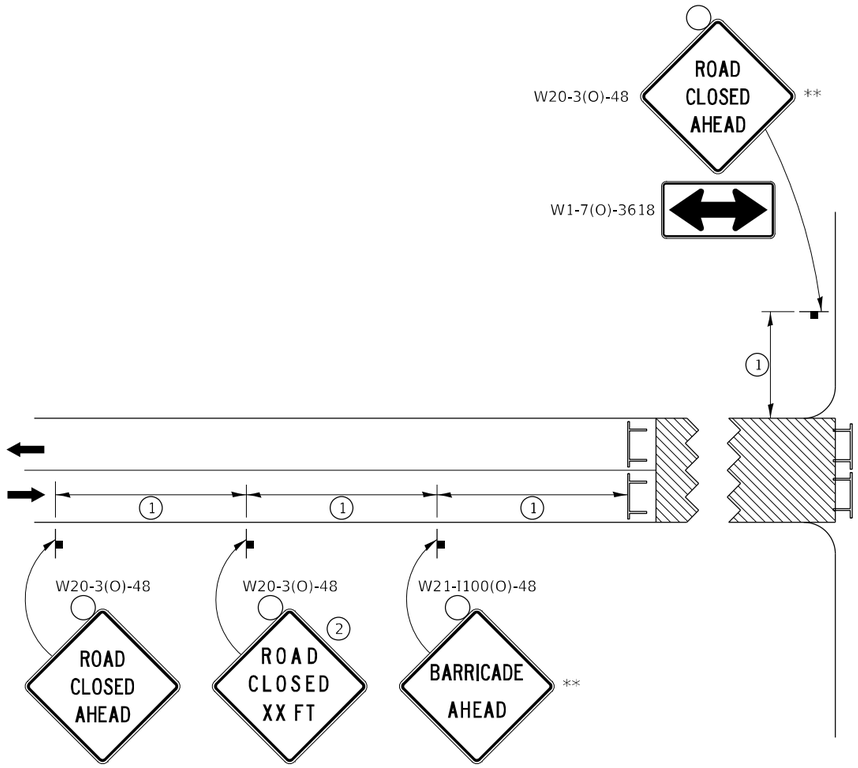

CONDITION II

Minor
Sideroad Closure

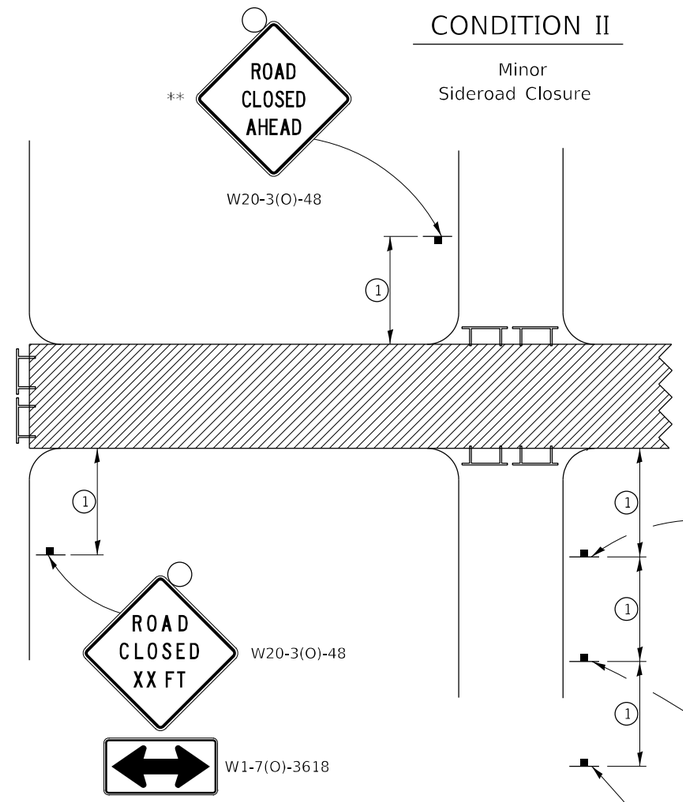

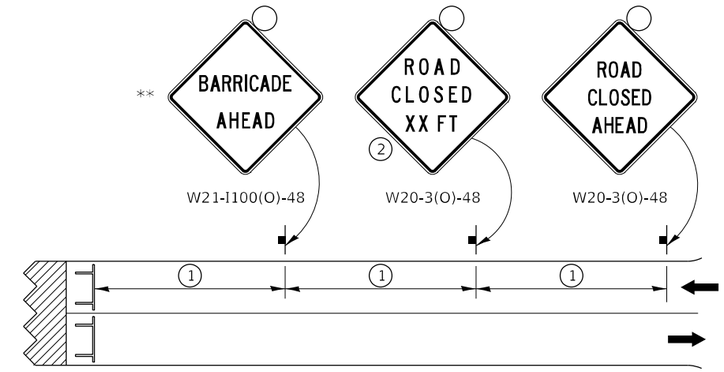

CONDITION I

Major
Sideroad Closure

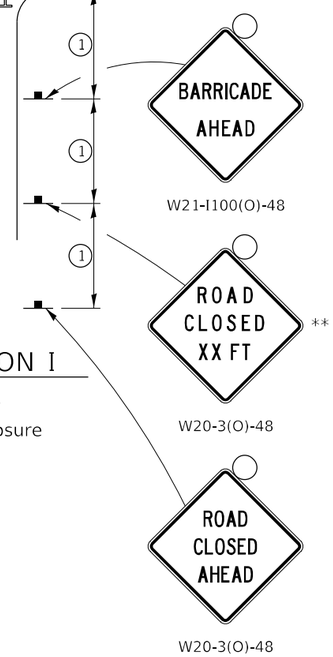

SYMBOLS

- Work area
- Type III Barricade with Flashers
- Sign with flashing light

GENERAL NOTES

Longitudinal dimensions may be adjusted to fit field conditions.

Side roads requiring all three signs as shown in CONDITION I (Major Sideroad Closure), shall be listed in the special provision.

** Where local access is to be maintained, barricades are to be set up as shown in "Road Closed To Thru Traffic". Type III Barricades and R11-2-4830 signs shall be as shown in "Road Closed To All Traffic" detail on Highway Standard 701901.

All dimensions are in inches unless otherwise shown.

(1)

SIGN SPACING TABLE	
Posted Speed	Sign Spacing
45 MPH and above	500'
Below 45 MPH	250'

(2)

SIGN LEGEND	
Posted Speed Limit	Distance
45 MPH and above	1000'
Below 45 MPH	500'

ROAD CLOSED TO THRU TRAFFIC BARRICADE SET UP

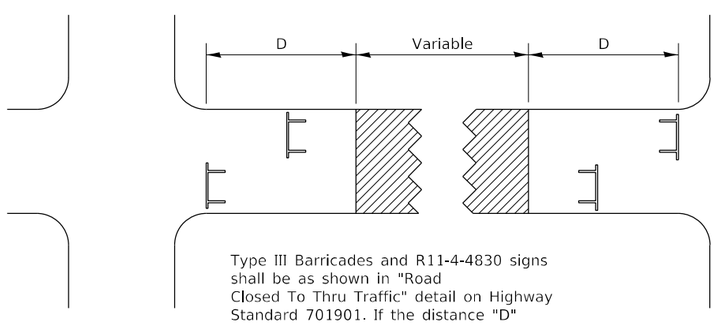

Type III Barricades and R11-4-4830 signs shall be as shown in "Road Closed To Thru Traffic" detail on Highway Standard 701901. If the distance "D" exceeds 2000' an additional set of barricades and R11-4-4830 shall be placed at each end of the work area.

TYPICAL APPLICATION FOR ROAD CLOSURE

FILE NAME: pw:\\ildot-pw.bentley.com:PWIDOT\Documents\IDOT Offices\District 2\Projects\64D78\Program Development\Studies & Plans\Design\CADD\CADsheets\sht-district-typicals.dgn	USER NAME = hogensonjd	DESIGNED -	REVISED - 8-03-17
		DRAWN -	REVISED - 10-05-16
	PLOT SCALE = 100.0000 ' / in.	CHECKED -	REVISED - 8-27-13
	PLOT DATE = 10/22/2021	DATE -	REVISED - 10-17-11

STATE OF ILLINOIS
DEPARTMENT OF TRANSPORTATION

REGION 2 / DISTRICT 2 STANDARD

SCALE: | SHEET OF SHEETS | STA. TO STA.

F.A.P. RTE.	SECTION	COUNTY	TOTAL SHEETS	SHEET NO.
646	9R & 9RS-3	WHITESIDE	222	183
		CONTRACT NO. 64D78		
		ILLINOIS	FED. AID PROJECT	

TYPICAL PAVEMENT MARKINGS

TYPICAL PAVEMENT MARKING FOR FLUSH MEDIAN AT LEFT TURN LANE

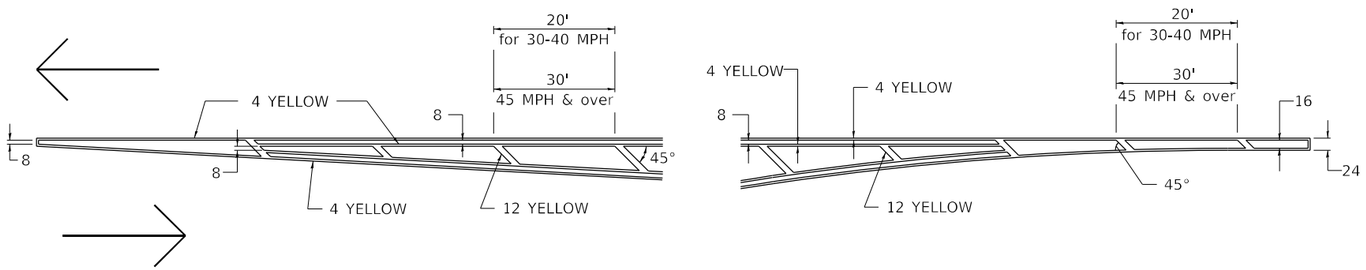

MEDIAN PAVEMENT MARKING

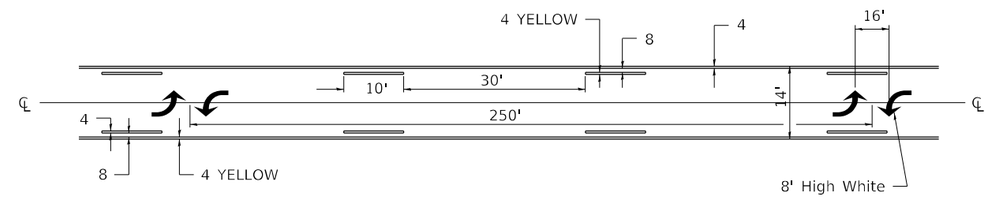

** ALL DIMENSIONS ARE IN INCHES UNLESS OTHERWISE NOTED.

TYPICAL ISLAND OFFSET SHOULDER WIDTH

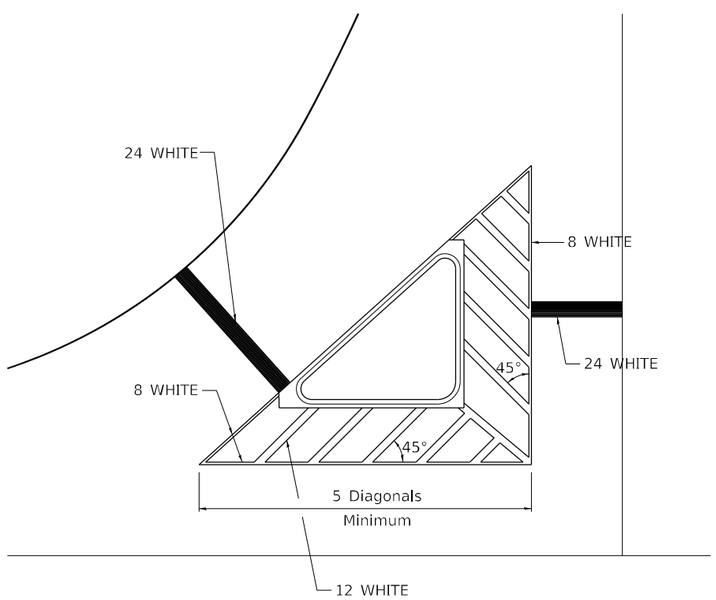

TYPICAL MARKING FOR PAINTED ISLANDS

NOTE:
* 45° TO LOCAL TAN.

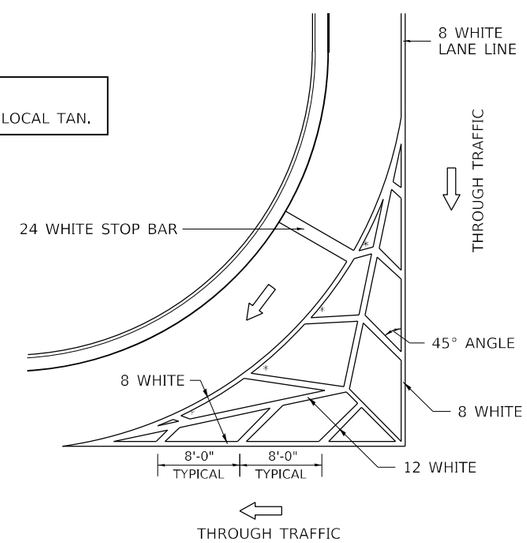

STANDARD CROSSWALK MARKING

See Schedules for Locations

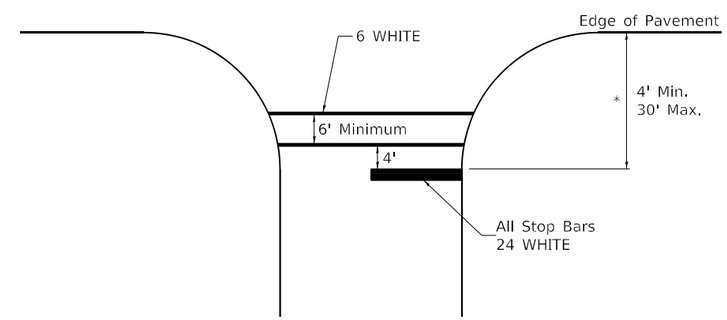

* Distance to the nearest edge of the intersecting roadway in the absence of a marked crosswalk.

FILE NAME: pw:\\ildot-pw.bentley.com:PWIDOT\Documents\IDOT Offices\District 2\Projects\64D78\Program Development\Studies & Plans\Design\CADD\CADsheets\64D78-sht-district-3-04-02.dgn	USER NAME = hogenson]d	DESIGNED -	REVISED - 6-27-14	STATE OF ILLINOIS DEPARTMENT OF TRANSPORTATION	REGION 2 / DISTRICT 2 STANDARD	F.A.P. RTE.	SECTION	COUNTY	TOTAL SHEETS	SHEET NO.
		DRAWN -	REVISED - 6-05-12			646	9R & 9RS-3	WHITESIDE	222	184
	PLOT SCALE = 100.0000 ' / in.	CHECKED -	REVISED -					CONTRACT NO. 64D78		
	PLOT DATE = 10/22/2021	DATE -	REVISED -		SCALE: SHEET 1 OF 3 SHEETS STA. TO STA.		ILLINOIS	FED. AID PROJECT		

TYPICAL PAVEMENT MARKINGS

ARROW LAYOUT

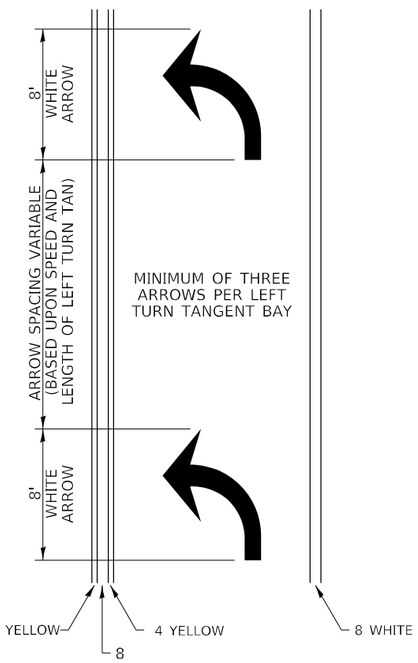

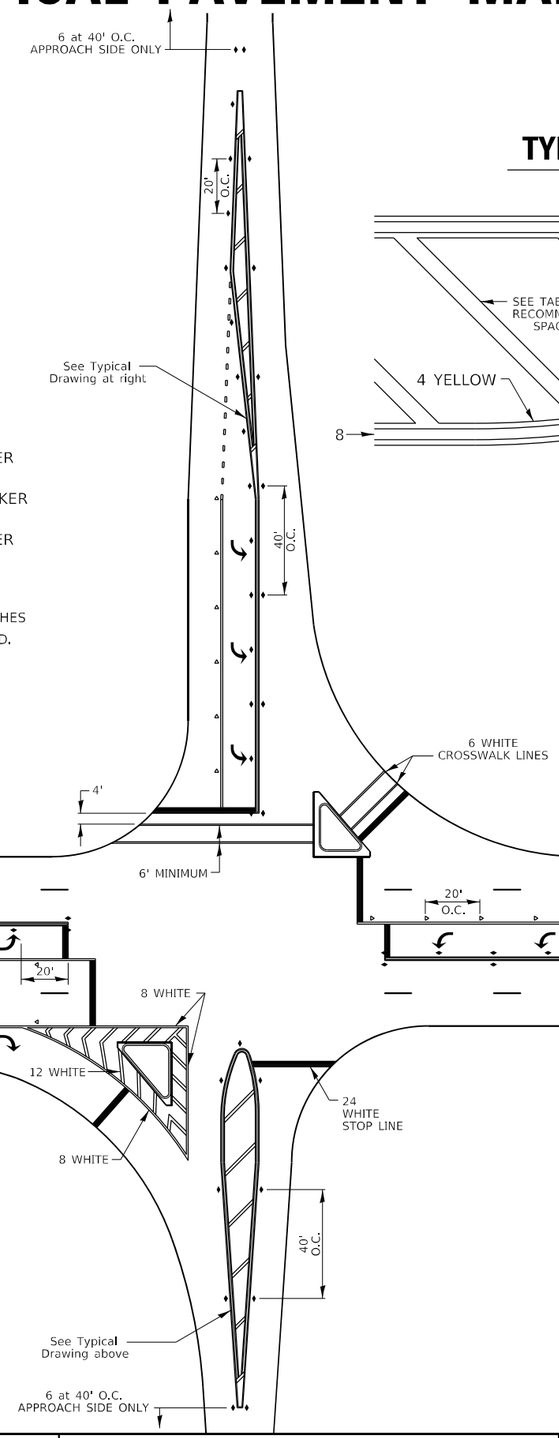

◀ ONE-WAY AMBER MARKER

◁ ONE-WAY CRYSTAL MARKER

◆ TWO-WAY AMBER MARKER

ALL DIMENSIONS ARE IN INCHES UNLESS OTHERWISE NOTED.

TYPICAL PAVEMENT MARKING FOR FLUSH MEDIAN

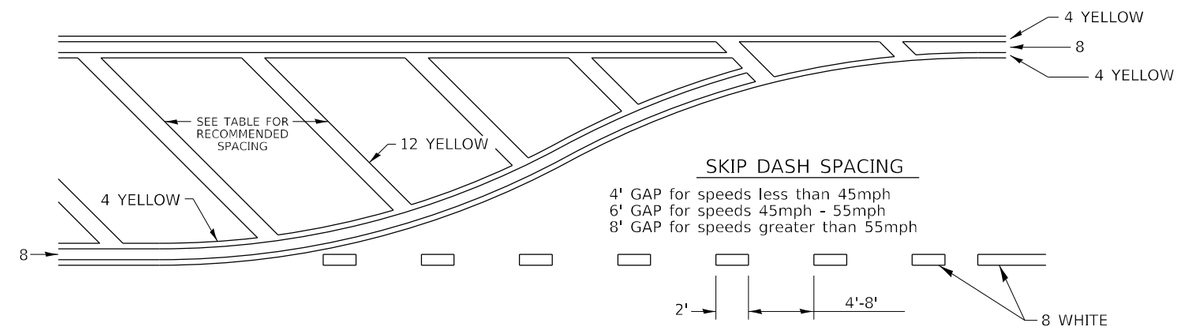

SKIP DASH SPACING

4' GAP for speeds less than 45mph
6' GAP for speeds 45mph - 55mph
8' GAP for speeds greater than 55mph

RECOMMENDED SPACING BETWEEN DIAGONALS (IN FEET)

Speed Limit Range	Continuous Median Area	Intersection Channelization	Objects (Islands)
less than 30MPH	50'	15'	10'
30-40MPH	75'	20'	15'
45MPH & over	75'	30'	20'

NOTE: if the spacing recommended in the Table does not permit at least five diagonal lines in the area being marked, the spacing from the next lowest speed range should be used. The recommended spacing is measured parallel to the pavement center line.

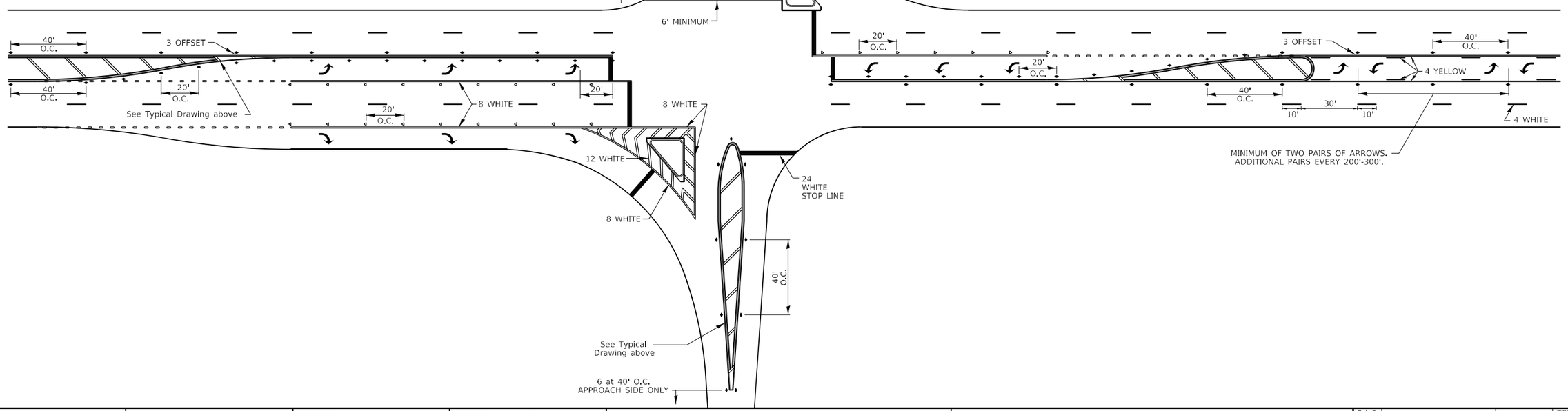

FILE NAME: pw:\\ildot-pw.bentley.com:PWIDOT\Documents\IDOT Offices\District 2\Projects\64D78\Program Development\Studies & Plans\Design\CADD\CADsheets\64D78-sht-district3-05-02.dgn	USER NAME = hogensonjd	DESIGNED -	REVISED - 6-27-14
		DRAWN -	REVISED -
	PLOT SCALE = 100.0000 ' / in.	CHECKED -	REVISED -
	PLOT DATE = 10/22/2021	DATE -	REVISED -

STATE OF ILLINOIS
DEPARTMENT OF TRANSPORTATION

REGION 2 / DISTRICT 2 STANDARD

SCALE: | SHEET 2 OF 3 SHEETS | STA. TO STA.

F.A.P. RTE.	SECTION	COUNTY	TOTAL SHEETS	SHEET NO.
646	9R & 9RS-3	WHITESIDE	222	185
		CONTRACT NO. 64D78		
	ILLINOIS	FED. AID PROJECT		

TYPICAL PAVEMENT MARKINGS

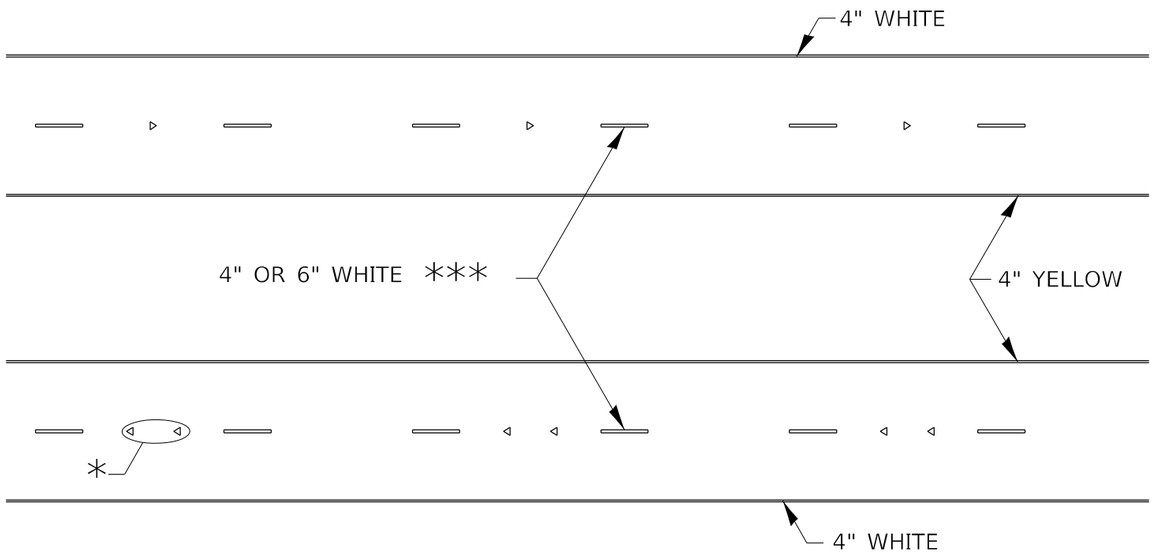

* SEE HIGHWAY STANDARD 781001 FOR SPACING DETAILS.
USE DOUBLE MARKERS WHEN ADT ≥ 20,000.

MULTI–LANE / DIVIDED

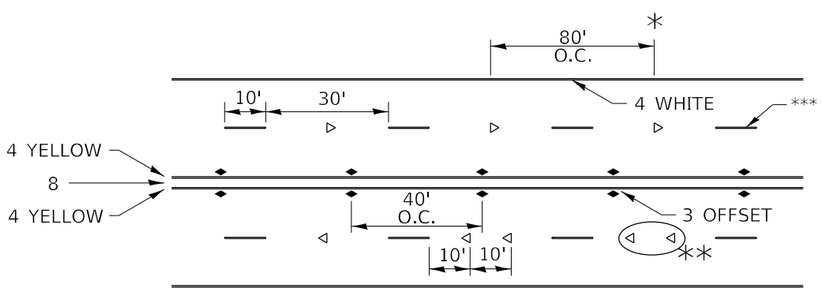

* REDUCE TO 40' O.C. ON CURVES WHERE ADVISORY SPEEDS ARE 10 MPH LOWER THAN POSTED SPEEDS.

** USE DOUBLE MARKERS WHEN ADT ≥ 20,000

*** CENTERLINE SKIP DASH PAVEMENT MARKING SPEED LIMIT LESS THAN 40 MPH USE 4" LINE. SPEED LIMIT 40 MPH AND OVER USE 6" LINE.

MULTI–LANE / UNDIVIDED & ONE WAY

(FOR MULTI-LANE UNDIVIDED HIGHWAYS USE THIS DETAIL NOT HIGHWAY STANDARD 781001)

SYMBOLS

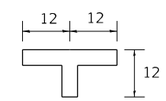

TYPICAL PARKING SPACING

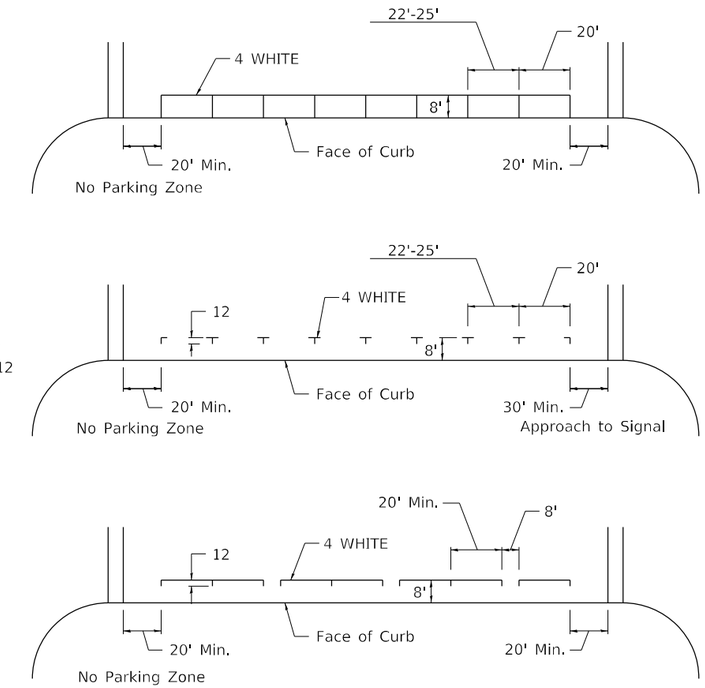

TYPICAL PAVEMENT MARKING FOR TWO LANE SECTION – NO PASSING ZONES

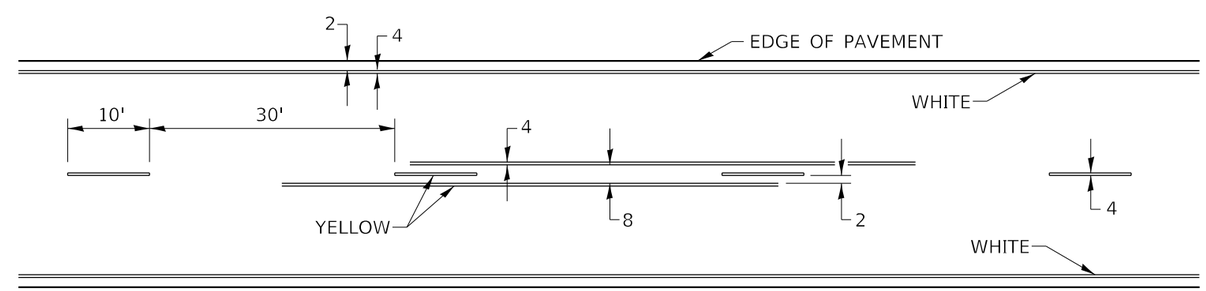

FILE NAME: pw:\\ildot-pw.bentley.com:PWIDOT\Documents\IDOT Offices\District 2\Projects\64D78\Program Development\Studies & Plans\Design\CADD\CADsheets\64d78-sht-district-2-typ-mkg.dgn	USER NAME = hogensonjd	DESIGNED -	REVISED - 6-27-14	STATE OF ILLINOIS DEPARTMENT OF TRANSPORTATION	REGION 2 / DISTRICT 2 STANDARD	F.A.P. RTE.	SECTION	COUNTY	TOTAL SHEETS / SHEET NO.
		DRAWN -	REVISED - 8-27-13			646	9R & 9RS-3	WHITESIDE	222 / 186
	PLOT SCALE = 100.0000 ' / in.	CHECKED -	REVISED - 11-28-12					CONTRACT NO. 64D78	
	PLOT DATE = 10/22/2021	DATE -	REVISED -		SCALE: / SHEET 3 OF 3 SHEETS / STA. / TO STA.		ILLINOIS	FED. AID PROJECT	

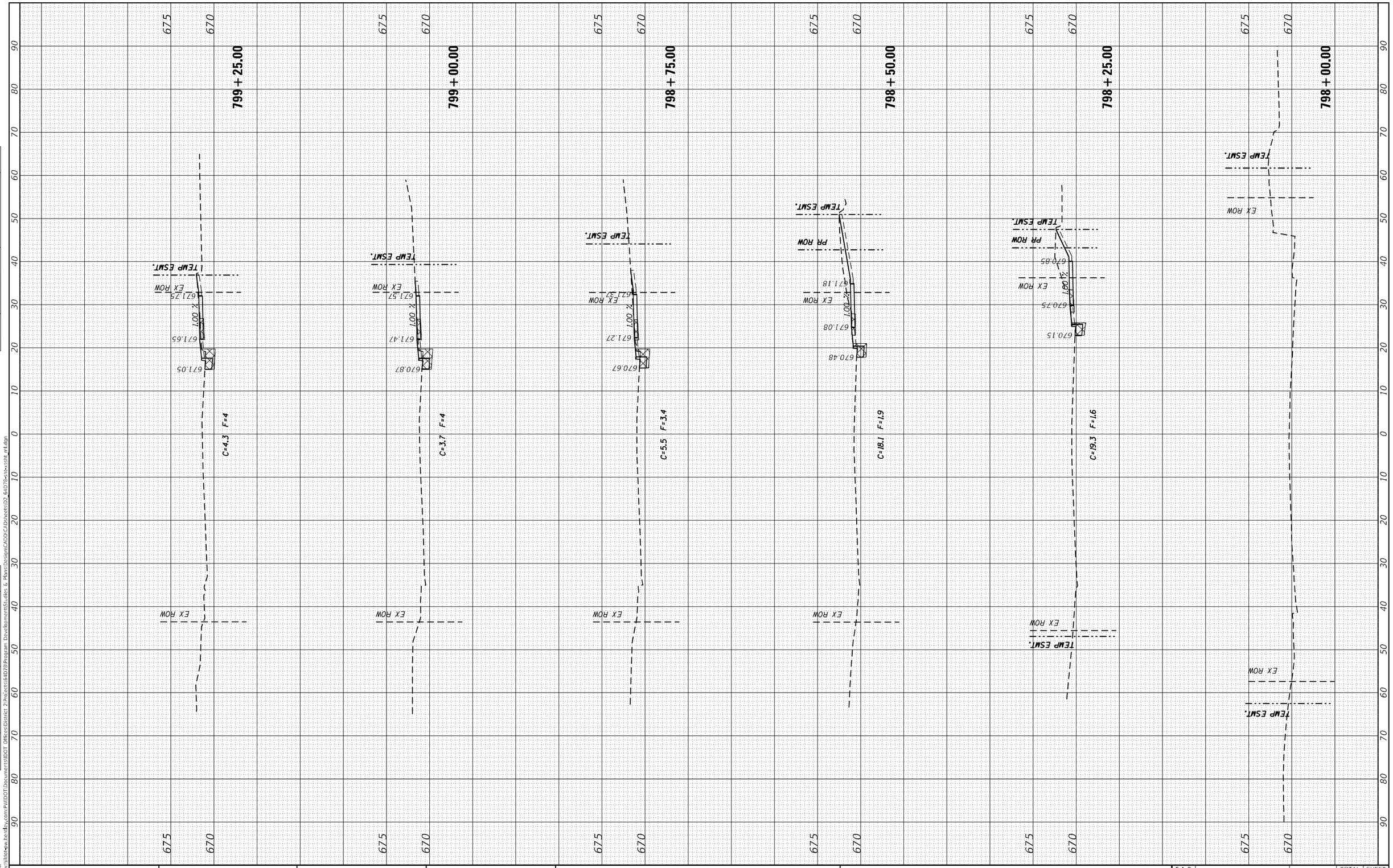

FINAL SURVEY	BY	DATE
SURVEYED		
PLOTTED		
TEMPLATE		
AREAS		
AREAS CHECKED		
NOTE BOOK		
NO.		

ORIGINAL SURVEY	BY	DATE
SURVEYED		
PLOTTED		
TEMPLATE		
AREAS		
AREAS CHECKED		
NOTE BOOK		
NO.		

MODEL: Default
FILE NAME: pw:\\ildot-pw.bentley.com:PWIDOT\Documents\IDOT Offices\District 2\Projects\64D78\Program Development\Studies & Plans\Design\CADD\CADsheets\02_64D78-sht-xssht_prl.dgn

USER NAME = hagensonjd	DESIGNED -	REVISED -
	DRAWN -	REVISED -
PLOT SCALE = 20.0000 ' / in.	CHECKED -	REVISED -
PLOT DATE = 10/22/2021	DATE -	REVISED -

STATE OF ILLINOIS
DEPARTMENT OF TRANSPORTATION

IL ROUTE 40
MAINLINE CROSS SECTIONS

SCALE: | SHEET OF SHEETS | STA. 798+00.00 TO STA. 799+25.00

F.A.P. RTE.	SECTION	COUNTY	TOTAL SHEETS	SHEET NO.
646	9R & 9RS-3	WHITESIDE	222	187

CONTRACT NO. 64D78

ILLINOIS | FED. AID PROJECT

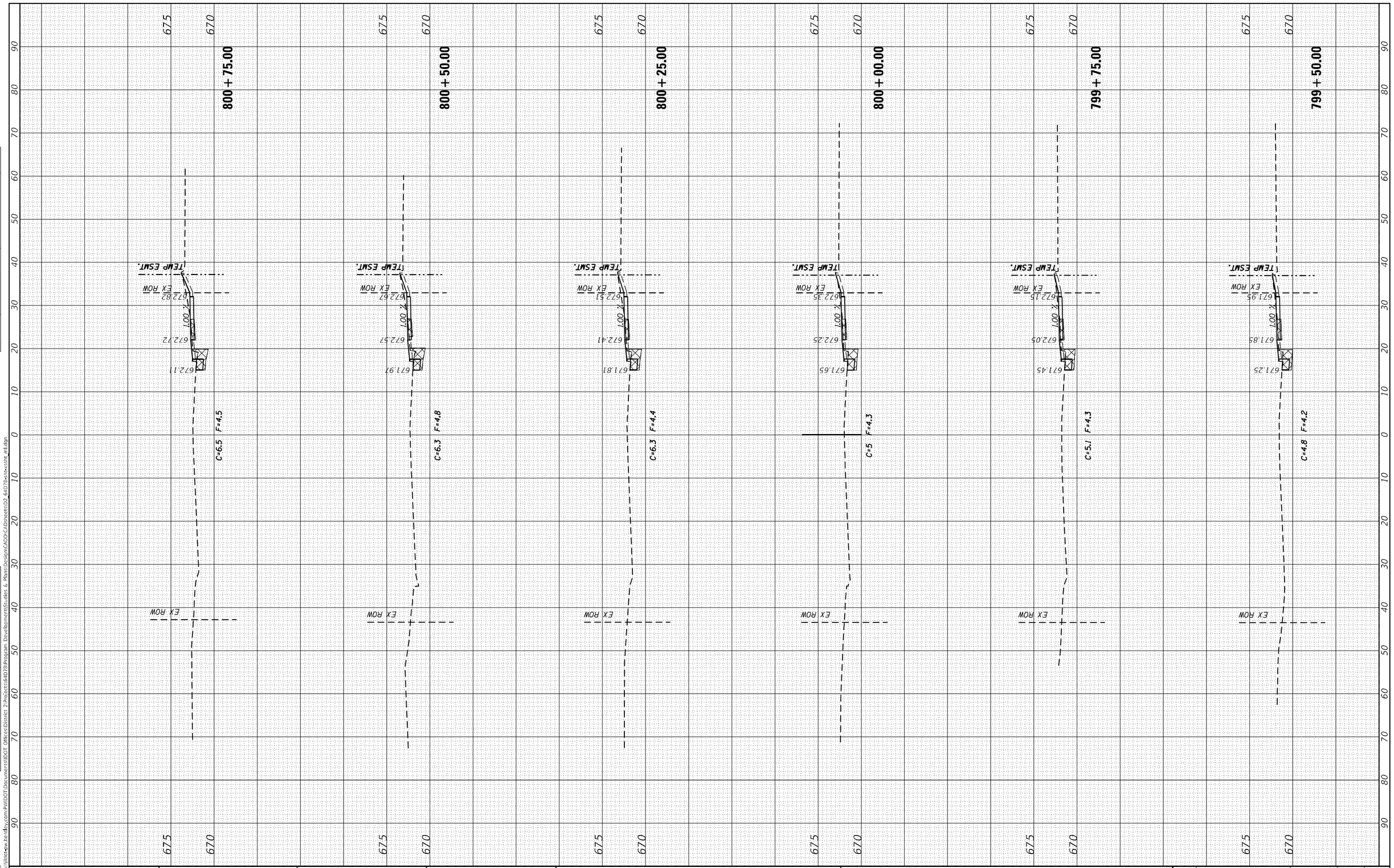

FINAL SURVEY	BY	DATE
SURVEYED		
PLOTTED		
TEMPLATE		
AREAS		
AREAS CHECKED		
NOTE BOOK		
NO.		

ORIGINAL SURVEY	BY	DATE
SURVEYED		
PLOTTED		
TEMPLATE		
AREAS		
AREAS CHECKED		
NOTE BOOK		
NO.		

MODEL: Default
FILE NAME: pw:\\ildot-pw.bentley.com:PWIDOT\Documents\IDOT Offices\District 2\Projects\64D78\Program Development\Studies & Plans\Design\CADD\CADsheets\02_64D78-sht-xsst_prl.dgn

USER NAME = hagensonjd	DESIGNED -	REVISED -
	DRAWN -	REVISED -
PLOT SCALE = 20.0000 ' / in.	CHECKED -	REVISED -
PLOT DATE = 10/22/2021	DATE -	REVISED -

STATE OF ILLINOIS
DEPARTMENT OF TRANSPORTATION

IL ROUTE 40
MAINLINE CROSS SECTIONS

SCALE: | SHEET OF SHEETS | STA. 799+50.00 TO STA. 800+75.00

F.A.P. RTE.	SECTION	COUNTY	TOTAL SHEETS	SHEET NO.
646	9R & 9RS-3	WHITESIDE	222	188

CONTRACT NO. 64D78

ILLINOIS | FED. AID PROJECT

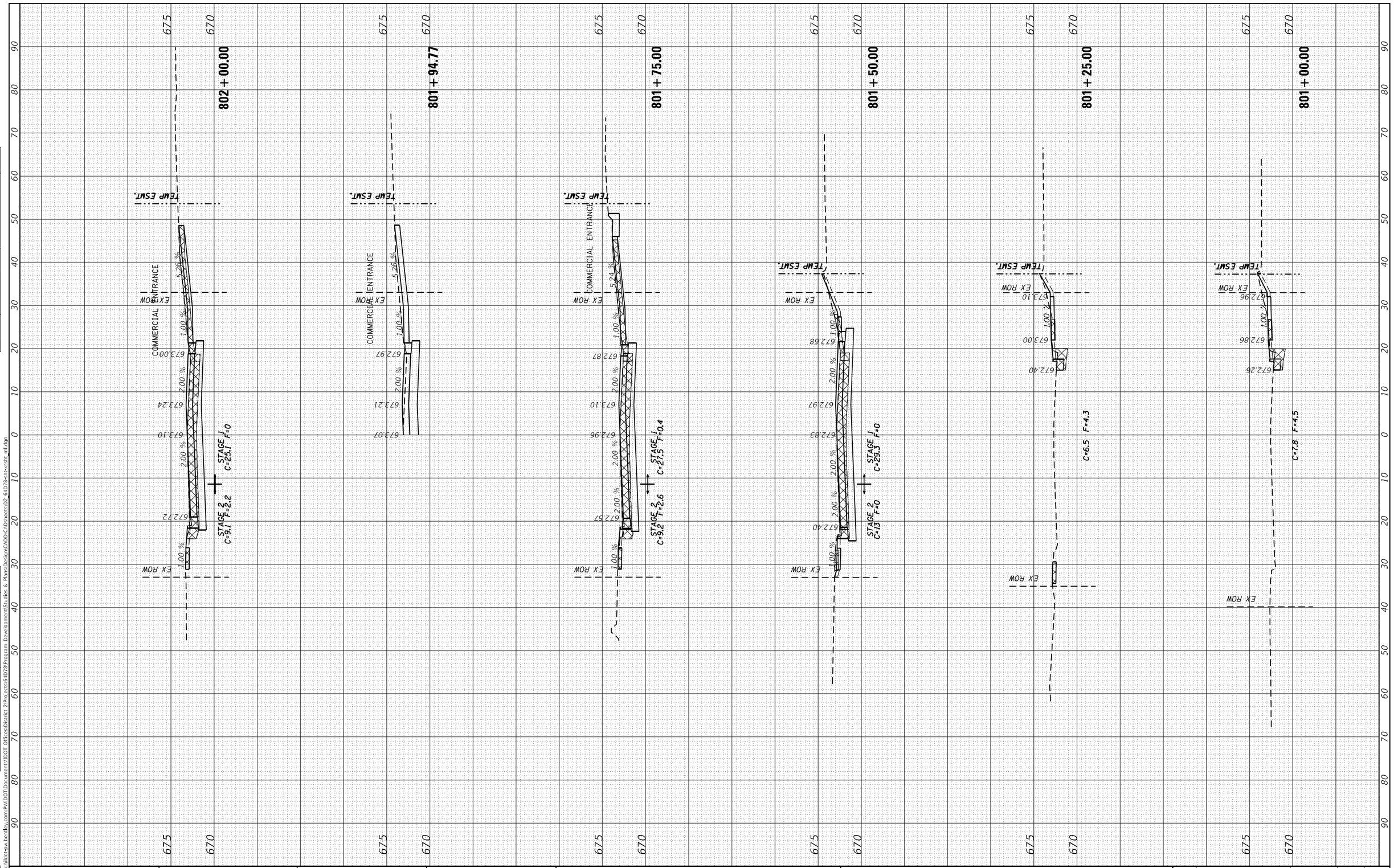

FINAL SURVEY	BY	DATE
SURVEYED		
PLOTTED		
TEMPLATE		
AREAS		
AREAS CHECKED		
NOTE BOOK		
NO.		

ORIGINAL SURVEY	BY	DATE
SURVEYED		
PLOTTED		
TEMPLATE		
AREAS		
AREAS CHECKED		
NOTE BOOK		
NO.		

MODEL: Default
FILE NAME: pw:\\ildot-pw.bentley.com:PWIDOT\Documents\IDOT Offices\District 2\Projects\64D78\Program Development\Studies & Plans\Design\CADD\CADsheets\02_64D78-sht-xsst_prl.dgn

USER NAME = hagensonjd	DESIGNED -	REVISED -
	DRAWN -	REVISED -
PLOT SCALE = 20.0000 ' / in.	CHECKED -	REVISED -
PLOT DATE = 10/22/2021	DATE -	REVISED -

STATE OF ILLINOIS
DEPARTMENT OF TRANSPORTATION

IL ROUTE 40
MAINLINE CROSS SECTIONS

SCALE: | SHEET OF SHEETS | STA. 801+00.00 TO STA. 802+00.00

F.A.P. RTE.	SECTION	COUNTY	TOTAL SHEETS	SHEET NO.
646	9R & 9RS-3	WHITESIDE	222	189

CONTRACT NO. 64D78

ILLINOIS | FED. AID PROJECT

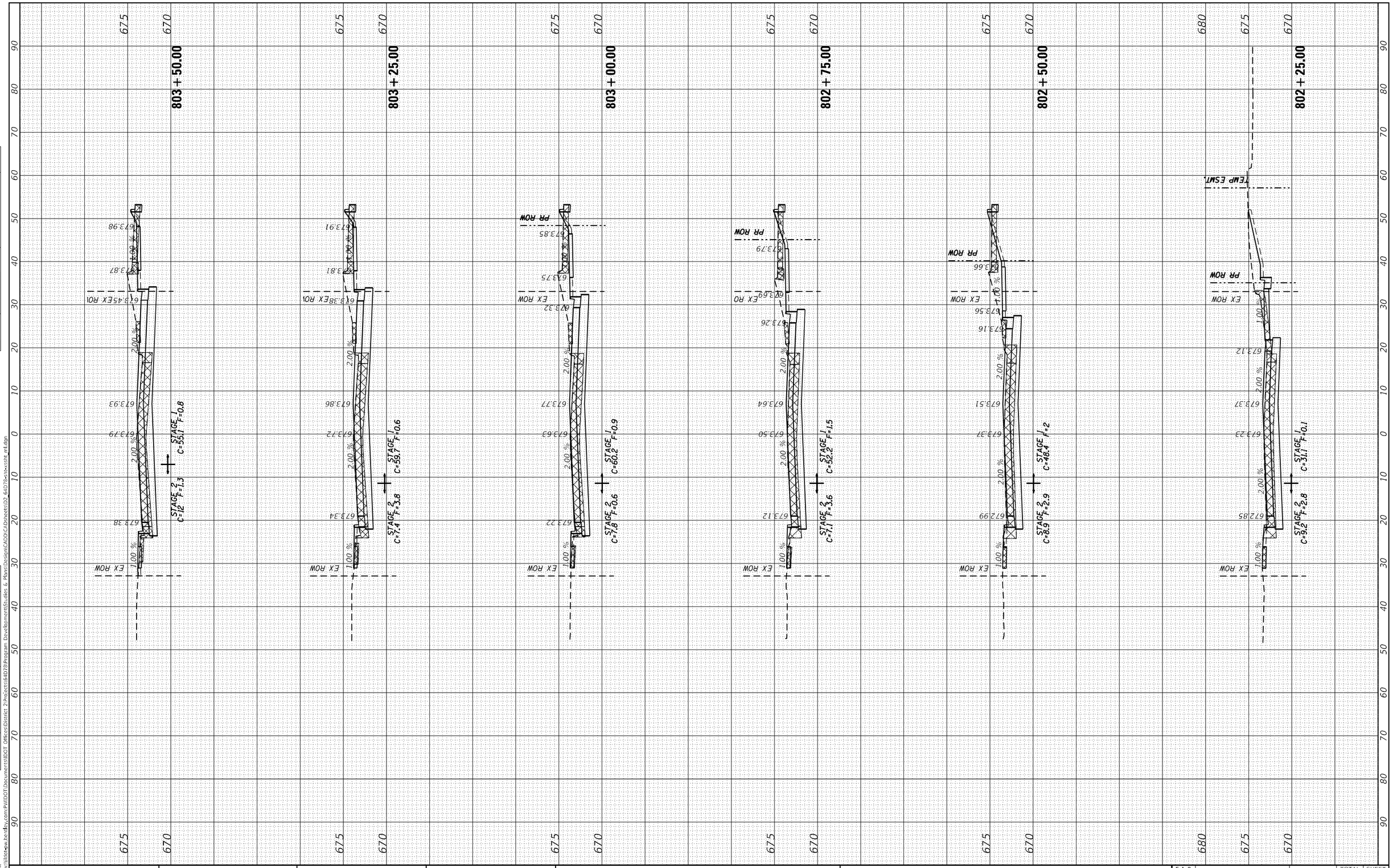

FINAL SURVEY		BY	DATE
NOTE BOOK	SURVEYED		
	PLOTTED		
	TEMPLATE		
	AREAS		
	AREAS CHECKED		
NO.			

ORIGINAL SURVEY		BY	DATE
NOTE BOOK	SURVEYED		
	PLOTTED		
	TEMPLATE		
	AREAS		
	AREAS CHECKED		
NO.			

MODEL: Default
FILE NAME: pw:\\ildot-pw.bentley.com:PWIDOT\Documents\IDOT Offices\District 2\Projects\64D78\Program Development\Studies & Plans\Design\CADD\CADsheets\02_64D78-sht-xsst_prl.dgn

USER NAME = hagensonjd	DESIGNED -	REVISED -
	DRAWN -	REVISED -
PLOT SCALE = 20.0000 ' / in.	CHECKED -	REVISED -
PLOT DATE = 10/22/2021	DATE -	REVISED -

STATE OF ILLINOIS
DEPARTMENT OF TRANSPORTATION

IL ROUTE 40
MAINLINE CROSS SECTIONS

SCALE: | SHEET OF SHEETS | STA. 802+25.00 TO STA. 803+50.00

F.A.P. RTE.	SECTION	COUNTY	TOTAL SHEETS	SHEET NO.
646	9R & 9RS-3	WHITESIDE	222	190

CONTRACT NO. 64D78

ILLINOIS | FED. AID PROJECT

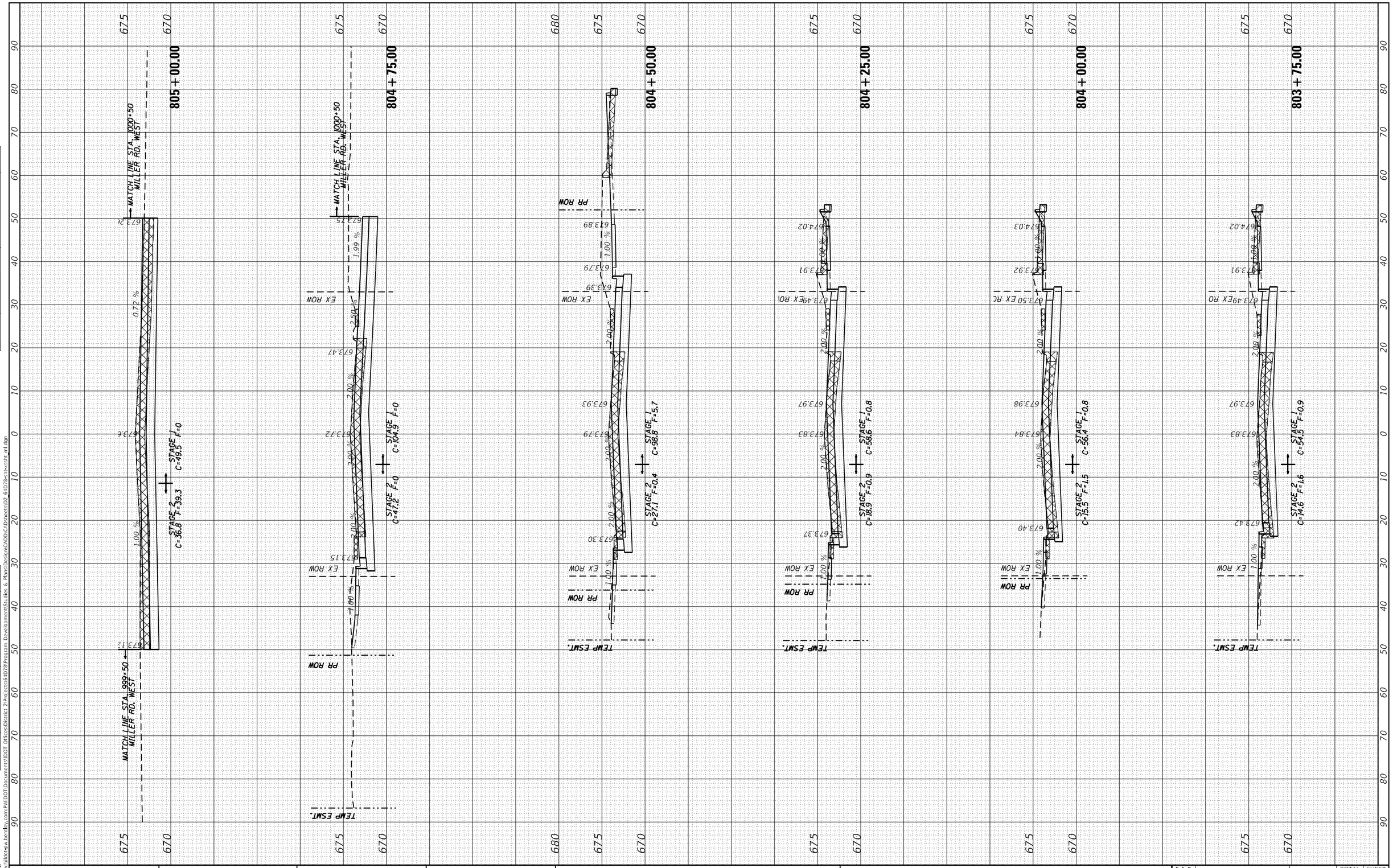

FINAL SURVEY		BY	DATE
NOTE BOOK	SURVEYED		
	PLOTTED		
	TEMPLATE		
	AREAS		
NO.	AREAS CHECKED		

ORIGINAL SURVEY		BY	DATE
NOTE BOOK	SURVEYED		
	PLOTTED		
	TEMPLATE		
	AREAS		
NO.	AREAS CHECKED		

MODEL: Default
FILE NAME: pw:\\ildot-pw.bentley.com:PWIDOT\Documents\IDOT Offices\District 2\Projects\64D78\Program Developments\Studies & Plans\Design\CADD\CADsheets\D2_64D78-sht-xsint_ml.dgn

USER NAME = hagensonjd	DESIGNED -	REVISED -
	DRAWN -	REVISED -
PLOT SCALE = 20.0000 ' / in.	CHECKED -	REVISED -
PLOT DATE = 10/22/2021	DATE -	REVISED -

STATE OF ILLINOIS
DEPARTMENT OF TRANSPORTATION

IL ROUTE 40
MAINLINE CROSS SECTIONS

SCALE: | SHEET OF SHEETS | STA. 803+75.00 TO STA. 805+00.00

F.A.P. RTE.	SECTION	COUNTY	TOTAL SHEETS	SHEET NO.
646	9R & 9RS-3	WHITESIDE	222	191
		CONTRACT NO. 64D78		
		ILLINOIS	FED. AID PROJECT	

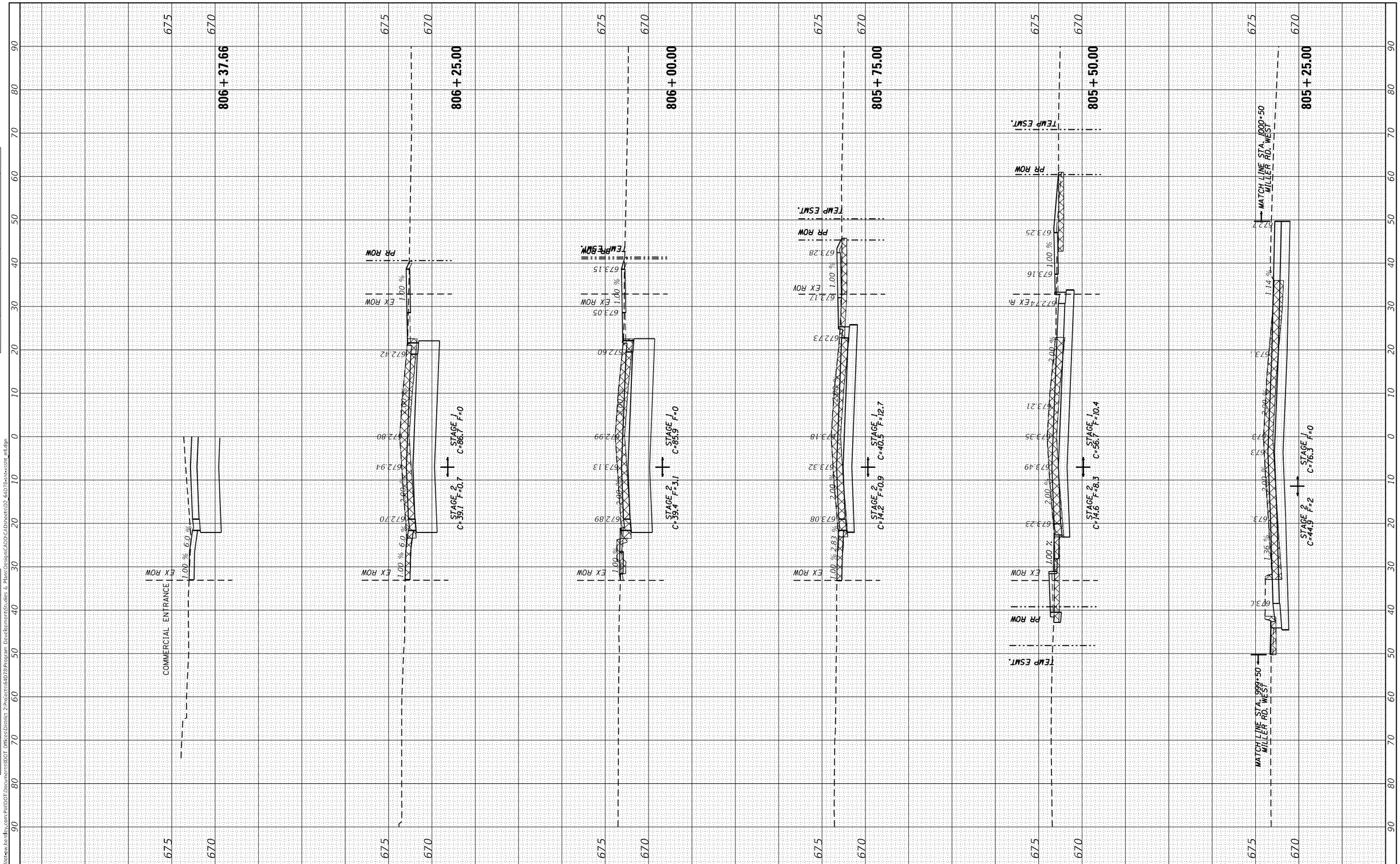

FINAL SURVEY		BY	DATE
NOTE BOOK	SURVEYED		
	PLOTTED		
	TEMPLATE		
	AREAS		
NO.	AREAS CHECKED		

ORIGINAL SURVEY		BY	DATE
NOTE BOOK	SURVEYED		
	PLOTTED		
	TEMPLATE		
	AREAS		
NO.	AREAS CHECKED		

MODEL: Default
FILE NAME: pw:\\ildot-pw.bentley.com:PWIDOT\Documents\IDOT Offices\District 2\Projects\64D78\Program Developments\Studies & Plans\Design\CADD\CADsheets\D2_64D78-sht-xsint_ml.dgn

USER NAME = hagensonjd	DESIGNED -	REVISED -
	DRAWN -	REVISED -
PLOT SCALE = 20.0000 ' / in.	CHECKED -	REVISED -
PLOT DATE = 10/22/2021	DATE -	REVISED -

STATE OF ILLINOIS
DEPARTMENT OF TRANSPORTATION

IL ROUTE 40
MAINLINE CROSS SECTIONS

SCALE: | SHEET OF SHEETS | STA. 805+25.00 TO STA. 806+37.66

F.A.P. RTE.	SECTION	COUNTY	TOTAL SHEETS	SHEET NO.
646	9R & 9RS-3	WHITESIDE	222	192
		CONTRACT NO. 64D78		
		ILLINOIS	FED. AID PROJECT	

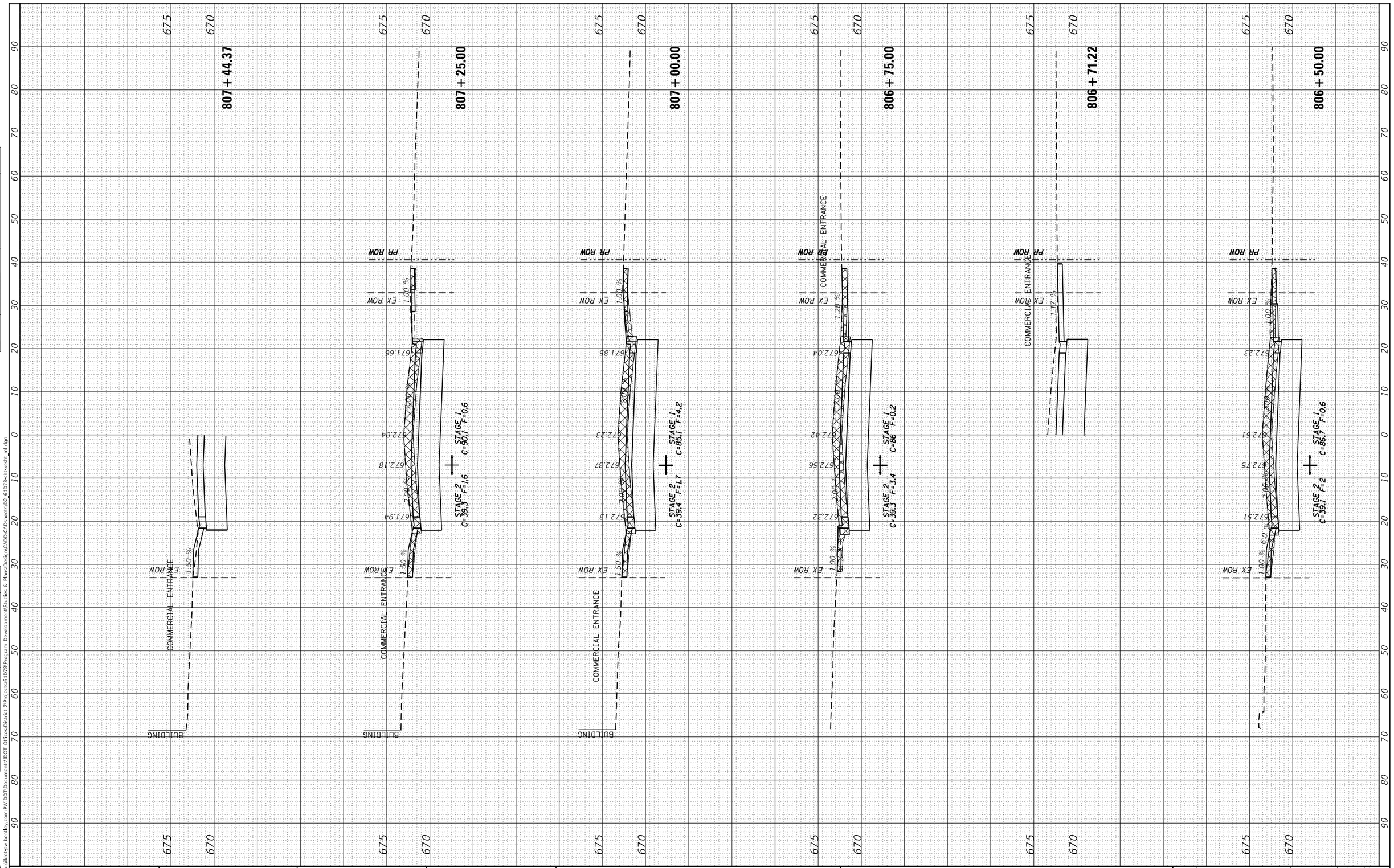

FINAL SURVEY		BY	DATE
NOTE BOOK	SURVEYED		
	PLOTTED		
	TEMPLATE		
	AREAS		
NO.	AREAS CHECKED		

ORIGINAL SURVEY		BY	DATE
NOTE BOOK	SURVEYED		
	PLOTTED		
	TEMPLATE		
	AREAS		
NO.	AREAS CHECKED		

MODEL: Default
FILE NAME: pw:\\ildot-pw.bentley.com:PWIDOT\Documents\IDOT Offices\District 2\Projects\64D78\Program Development\Studies & Plans\Design\CADD\CADsheets\02_64D78-sht-xsst_prl.dgn

USER NAME = hagensonjd	DESIGNED -	REVISED -
	DRAWN -	REVISED -
PLOT SCALE = 20.0000 ' / in.	CHECKED -	REVISED -
PLOT DATE = 10/22/2021	DATE -	REVISED -

STATE OF ILLINOIS
DEPARTMENT OF TRANSPORTATION

IL ROUTE 40
MAINLINE CROSS SECTIONS

SCALE: | SHEET OF SHEETS | STA. 806+50.00 TO STA. 807+44.37

F.A.P. RTE.	SECTION	COUNTY	TOTAL SHEETS	SHEET NO.
646	9R & 9RS-3	WHITESIDE	222	193
		CONTRACT NO. 64D78		
	ILLINOIS	FED. AID PROJECT		

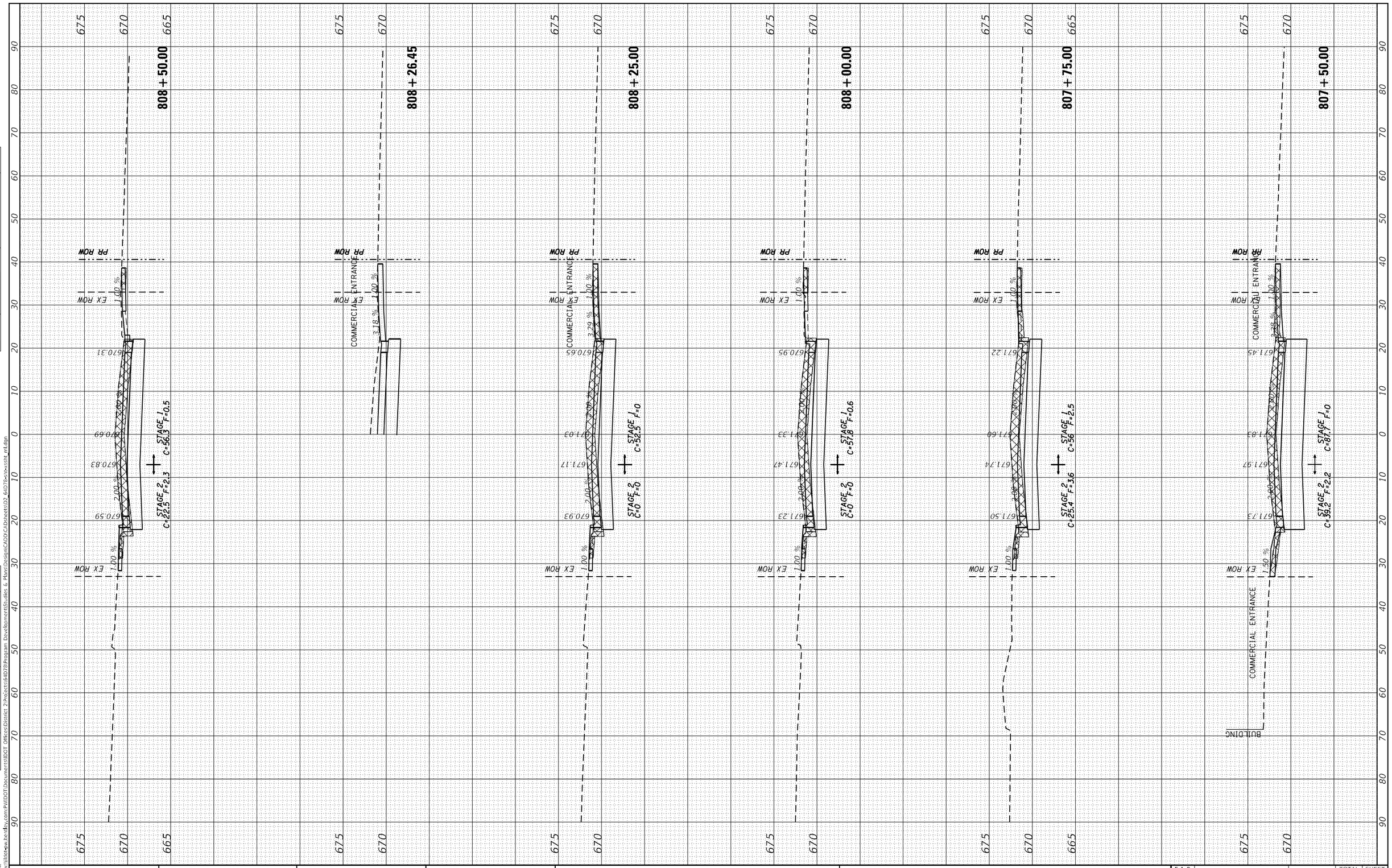

FINAL SURVEY	BY	DATE
NOTE BOOK	SURVEYED	
NO.	PLOTTED	
	TEMPLATE	
	AREAS	
	AREAS CHECKED	

ORIGINAL SURVEY	BY	DATE
NOTE BOOK	SURVEYED	
NO.	PLOTTED	
	TEMPLATE	
	AREAS	
	AREAS CHECKED	

MODEL: Default
FILE NAME: pw:\\ildot-pw.bentley.com:PWIDOT\Documents\IDOT Offices\District 2\Projects\64D78\Program Development\Studies & Plans\Design\CADD\CADsheets\02_64D78-sht-xsst_prl.dgn

USER NAME = hagensonjd	DESIGNED -	REVISED -
	DRAWN -	REVISED -
PLOT SCALE = 20.0000 ' / in.	CHECKED -	REVISED -
PLOT DATE = 10/22/2021	DATE -	REVISED -

STATE OF ILLINOIS
DEPARTMENT OF TRANSPORTATION

IL ROUTE 40
MAINLINE CROSS SECTIONS

SCALE: | SHEET OF SHEETS | STA. 807+50.00 TO STA. 808+50.00

F.A.P. RTE.	SECTION	COUNTY	TOTAL SHEETS	SHEET NO.
646	9R & 9RS-3	WHITESIDE	222	194

CONTRACT NO. 64D78

ILLINOIS | FED. AID PROJECT

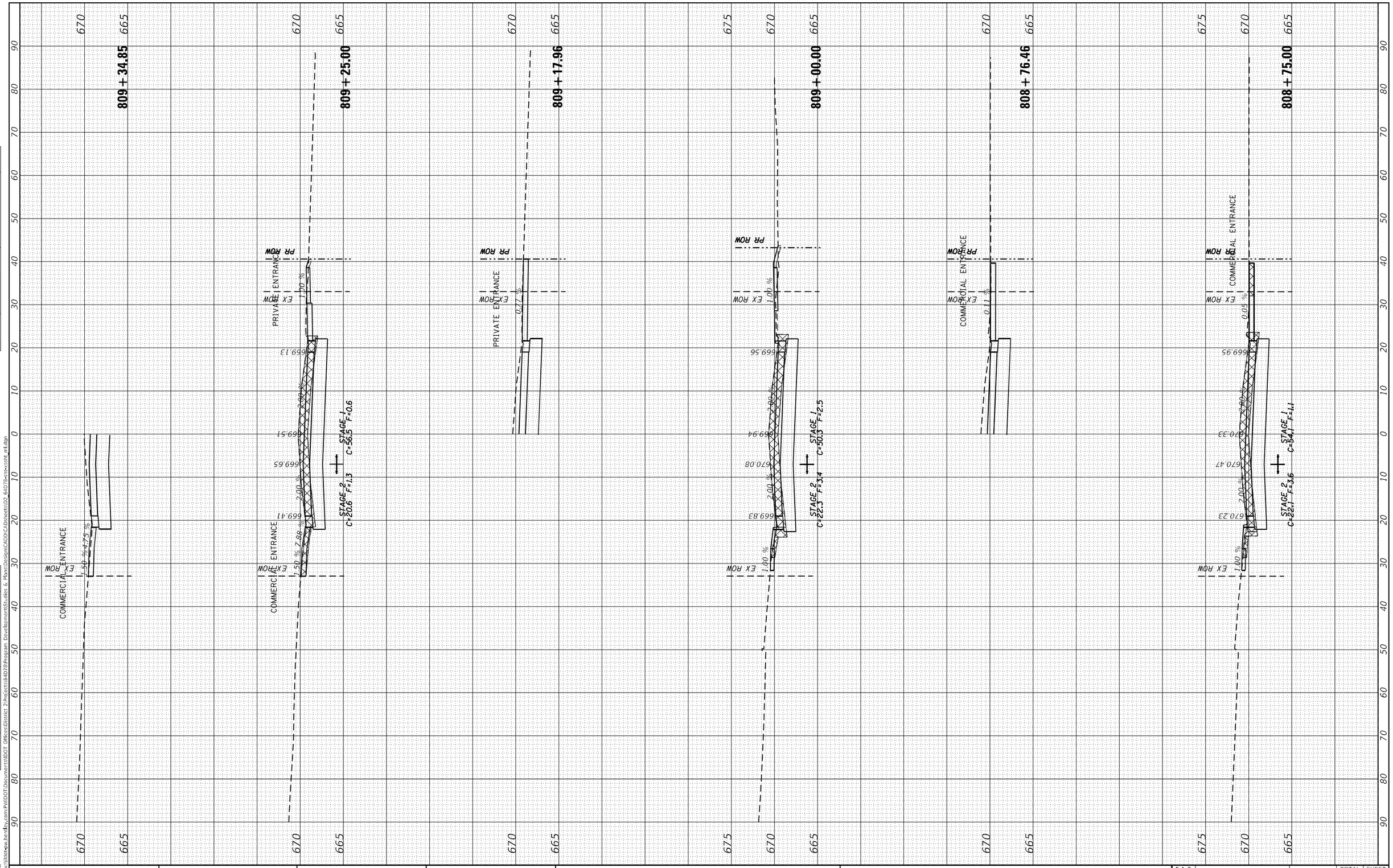

FINAL SURVEY	BY	DATE
SURVEYED		
PLOTTED		
TEMPLATE		
AREAS		
AREAS CHECKED		
NOTE BOOK NO.		

ORIGINAL SURVEY	BY	DATE
SURVEYED		
PLOTTED		
TEMPLATE		
AREAS		
AREAS CHECKED		
NOTE BOOK NO.		

MODEL: Default
FILE NAME: pw:\\ildot-pw.bentley.com:PWIDOT\Documents\IDOT Offices\District 2\Projects\64D78\Program Development\Studies & Plans\Design\CADD\CADsheets\02_64D78-sht-xsst_prl.dgn

USER NAME = hagensonjd	DESIGNED -	REVISED -
	DRAWN -	REVISED -
PLOT SCALE = 20.0000 ' / in.	CHECKED -	REVISED -
PLOT DATE = 10/22/2021	DATE -	REVISED -

STATE OF ILLINOIS
DEPARTMENT OF TRANSPORTATION

IL ROUTE 40
MAINLINE CROSS SECTIONS

SCALE: | SHEET OF SHEETS | STA. 808+75.00 TO STA. 809+34.85

F.A.P. RTE.	SECTION	COUNTY	TOTAL SHEETS	SHEET NO.
646	9R & 9RS-3	WHITESIDE	222	195

CONTRACT NO. 64D78

ILLINOIS | FED. AID PROJECT

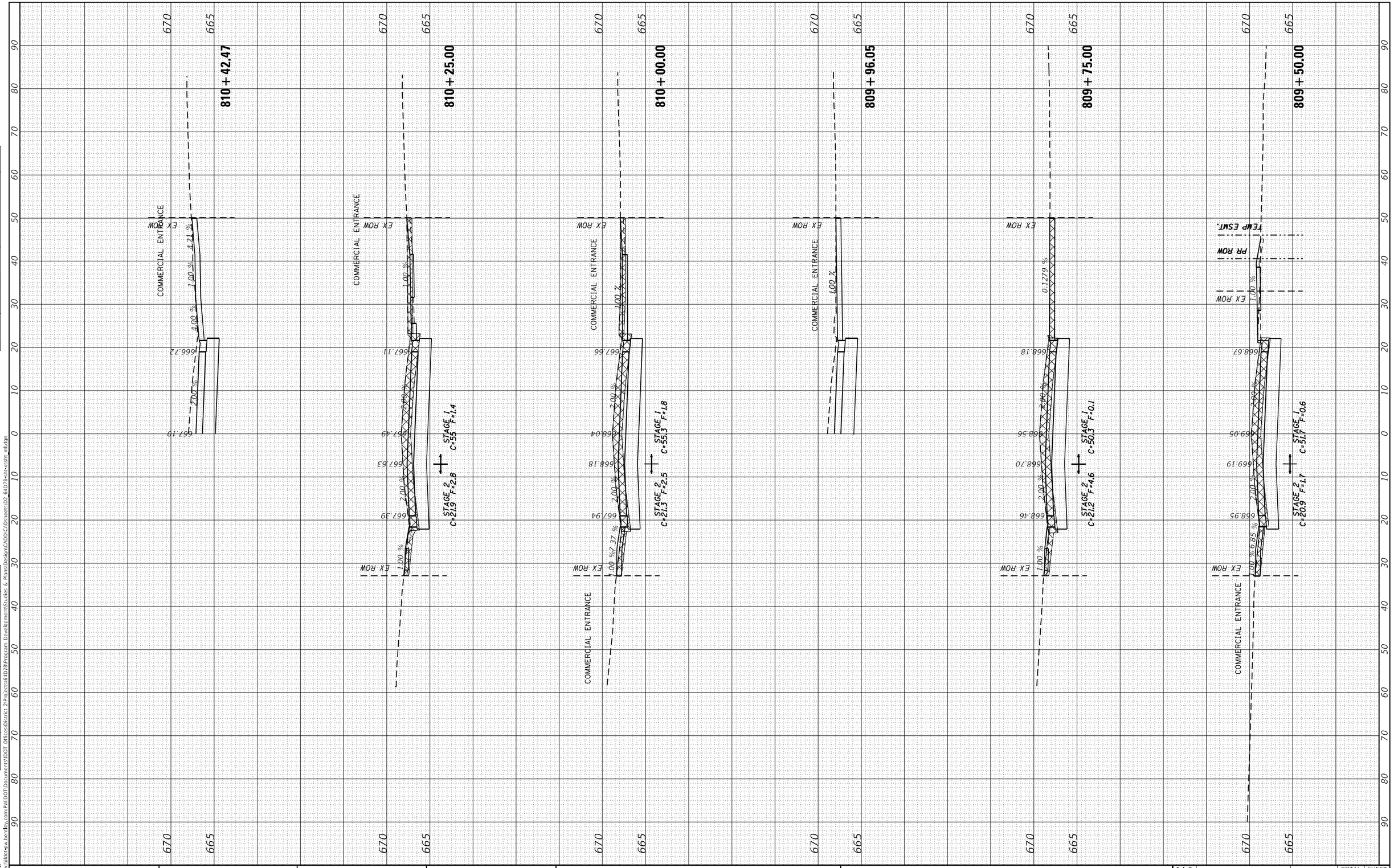

FINAL SURVEY	BY	DATE
SURVEYED		
PLOTTED		
TEMPLATE		
AREAS		
AREAS CHECKED		
NOTE BOOK		
NO.		

ORIGINAL SURVEY	BY	DATE
SURVEYED		
PLOTTED		
TEMPLATE		
AREAS		
AREAS CHECKED		
NOTE BOOK		
NO.		

MODEL: Default
FILE NAME: pw:\\ildot-pw.bentley.com:PWIDOT\Documents\IDOT Offices\District 2\Projects\64D78\Program Developments\Studies & Plans\Design\CADD\CADsheets\D2_64D78-cnx-sht_pfl.dgn

USER NAME = hagensonjd	DESIGNED -	REVISED -
	DRAWN -	REVISED -
PLOT SCALE = 20.0000 ' / in.	CHECKED -	REVISED -
PLOT DATE = 10/22/2021	DATE -	REVISED -

STATE OF ILLINOIS
DEPARTMENT OF TRANSPORTATION

IL ROUTE 40
MAINLINE CROSS SECTIONS

SCALE: | SHEET OF SHEETS | STA. 809+50.00 TO STA. 810+42.47

F.A.P. RTE.	SECTION	COUNTY	TOTAL SHEETS	SHEET NO.
646	9R & 9RS-3	WHITESIDE	222	196

CONTRACT NO. 64D78

ILLINOIS | FED. AID PROJECT

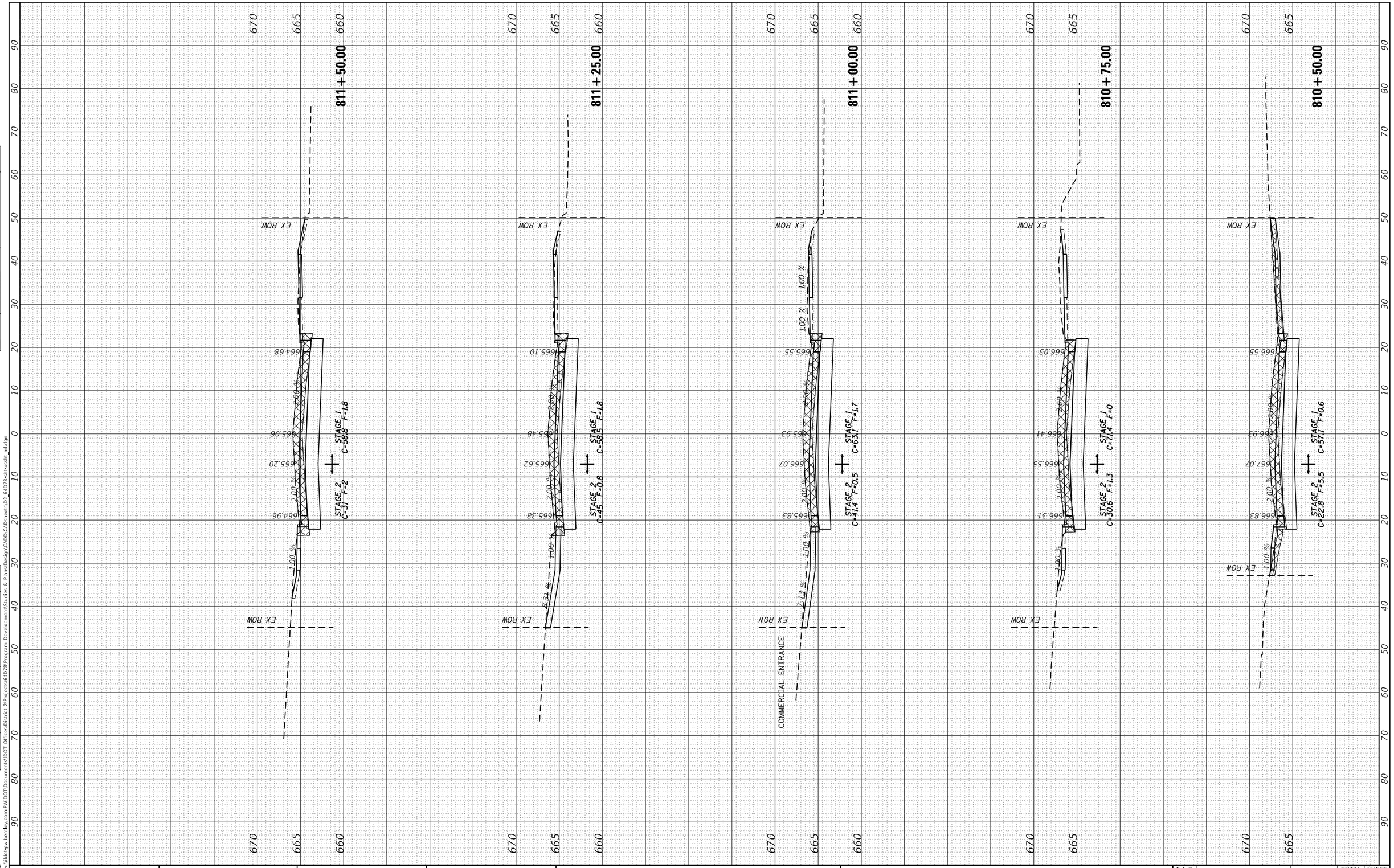

FINAL SURVEY		BY	DATE
NOTE BOOK	SURVEYED		
	PLOTTED		
	TEMPLATE		
	AREAS		
NO.	AREAS CHECKED		

ORIGINAL SURVEY		BY	DATE
NOTE BOOK	SURVEYED		
	PLOTTED		
	TEMPLATE		
	AREAS		
NO.	AREAS CHECKED		

MODEL: Default
FILE NAME: pw:\\ildot-pw.bentley.com:PWIDOT\Documents\IDOT Offices\District 2\Projects\64D78\Program Development\Studies & Plans\Design\CADD\CADsheets\D2_64D78-xs-xsht_pt1.dgn

USER NAME = hagensonjd	DESIGNED -	REVISED -
	DRAWN -	REVISED -
PLOT SCALE = 20.0000 ' / in.	CHECKED -	REVISED -
PLOT DATE = 10/22/2021	DATE -	REVISED -

STATE OF ILLINOIS
DEPARTMENT OF TRANSPORTATION

IL ROUTE 40
MAINLINE CROSS SECTIONS

SCALE: | SHEET OF SHEETS | STA. 810+50.00 TO STA. 811+50.00

F.A.P. RTE.	SECTION	COUNTY	TOTAL SHEETS	SHEET NO.
646	9R & 9RS-3	WHITESIDE	222	197

CONTRACT NO. 64D78

ILLINOIS | FED. AID PROJECT

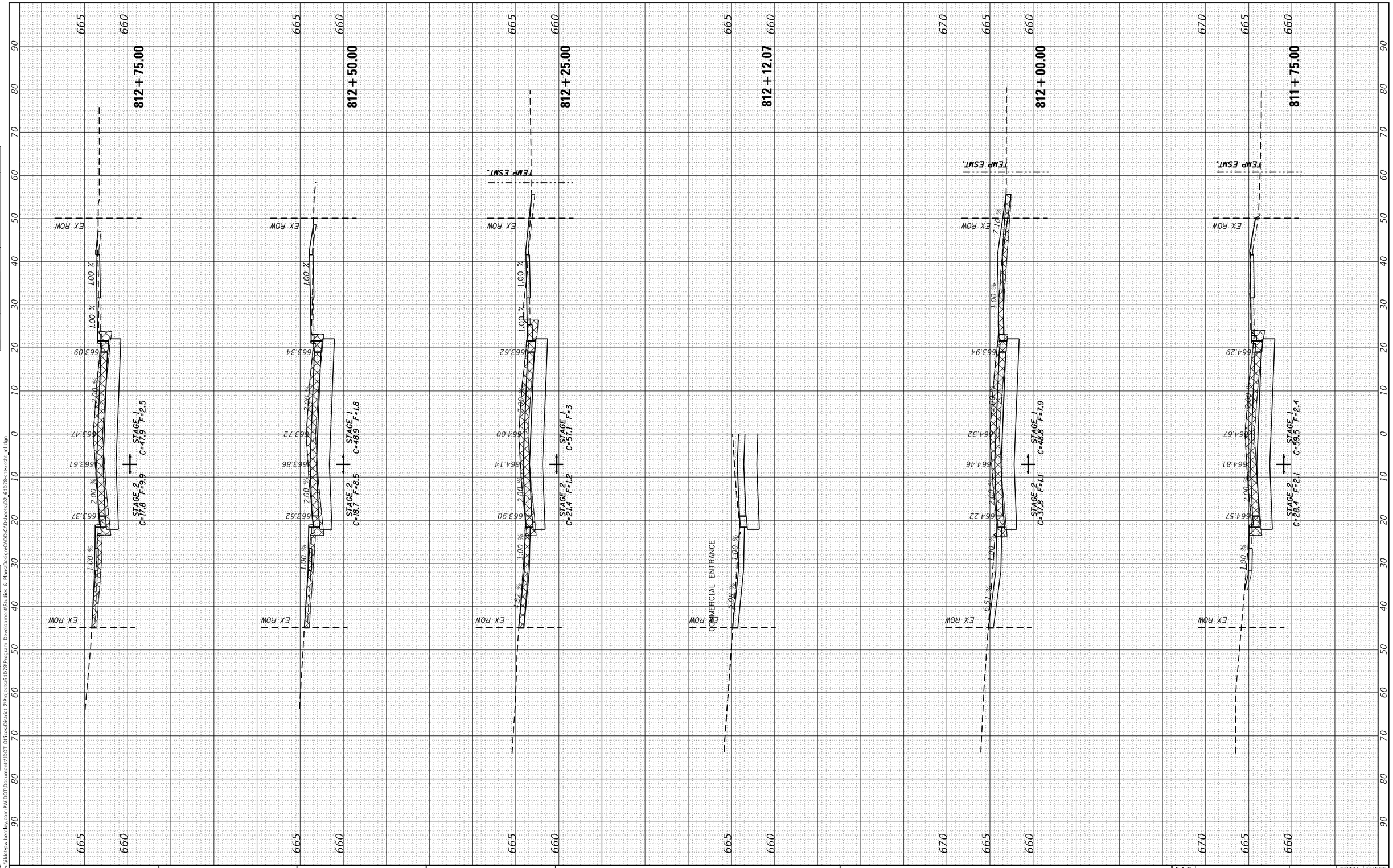

FINAL SURVEY	BY	DATE
SURVEYED		
PLOTTED		
TEMPLATE		
AREAS		
AREAS CHECKED		
NOTE BOOK		
NO.		

ORIGINAL SURVEY	BY	DATE
SURVEYED		
PLOTTED		
TEMPLATE		
AREAS		
AREAS CHECKED		
NOTE BOOK		
NO.		

MODEL: Default
FILE NAME: pw:\\bdesw.bentley.com:PWIDOT\Documents\IDOT Offices\District 2\Projects\64D78\Program Development\Studies & Plans\Design\CADD\Cabinsheets\D2_64D78-sctx-xsht_mt.dgn

USER NAME = hagensonjd	DESIGNED -	REVISED -	
	DRAWN -	REVISED -	
PLOT SCALE = 20.0000 ' / in.	CHECKED -	REVISED -	
PLOT DATE = 10/22/2021	DATE -	REVISED -	

STATE OF ILLINOIS
DEPARTMENT OF TRANSPORTATION

IL ROUTE 40
MAINLINE CROSS SECTIONS

SCALE: | SHEET OF SHEETS | STA. 811+75.00 TO STA. 812+75.00

F.A.P. RTE.	SECTION	COUNTY	TOTAL SHEETS	SHEET NO.
646	9R & 9RS-3	WHITESIDE	222	198

CONTRACT NO. 64D78

ILLINOIS | FED. AID PROJECT

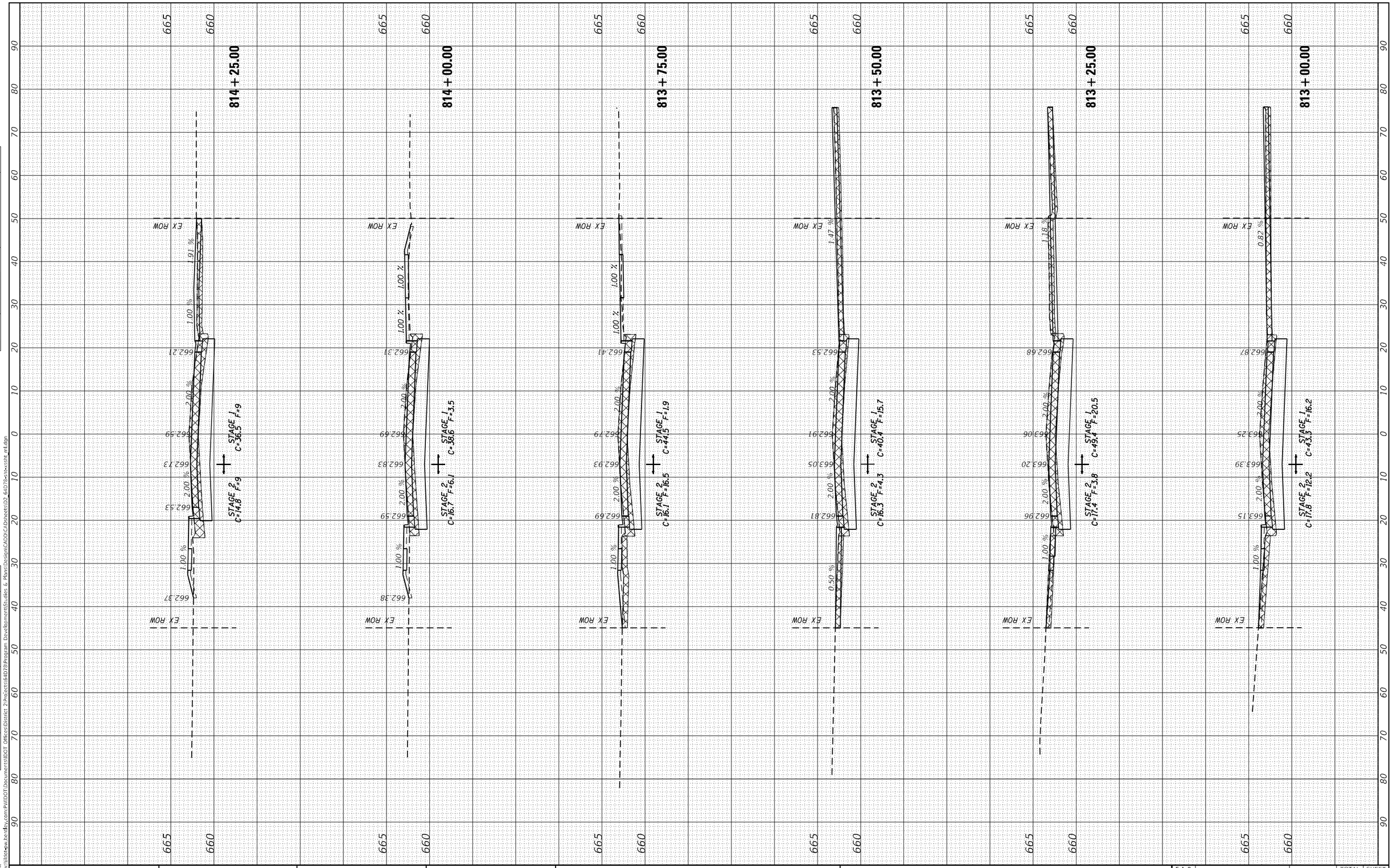

FINAL SURVEY	BY	DATE
SURVEYED		
PLOTTED		
TEMPLATE		
AREAS		
AREAS CHECKED		
NOTE BOOK		
NO.		

ORIGINAL SURVEY	BY	DATE
SURVEYED		
PLOTTED		
TEMPLATE		
AREAS		
AREAS CHECKED		
NOTE BOOK		
NO.		

MODEL: Default
FILE NAME: pw:\\ildot-pw.bentley.com:PWIDOT\Documents\IDOT Offices\District 2\Projects\64D78\Program Developments\Studies & Plans\Design\CADD\CADsheets\D2_64D78-sht-xsint_ml.dgn

USER NAME = hagensonjd	DESIGNED -	REVISED -
	DRAWN -	REVISED -
PLOT SCALE = 20.0000 ' / in.	CHECKED -	REVISED -
PLOT DATE = 10/22/2021	DATE -	REVISED -

STATE OF ILLINOIS
DEPARTMENT OF TRANSPORTATION

IL ROUTE 40
MAINLINE CROSS SECTIONS

SCALE: | SHEET OF SHEETS | STA. 813+00.00 TO STA. 814+25.00

F.A.P. RTE.	SECTION	COUNTY	TOTAL SHEETS	SHEET NO.
646	9R & 9RS-3	WHITESIDE	222	199

CONTRACT NO. 64D78

ILLINOIS | FED. AID PROJECT

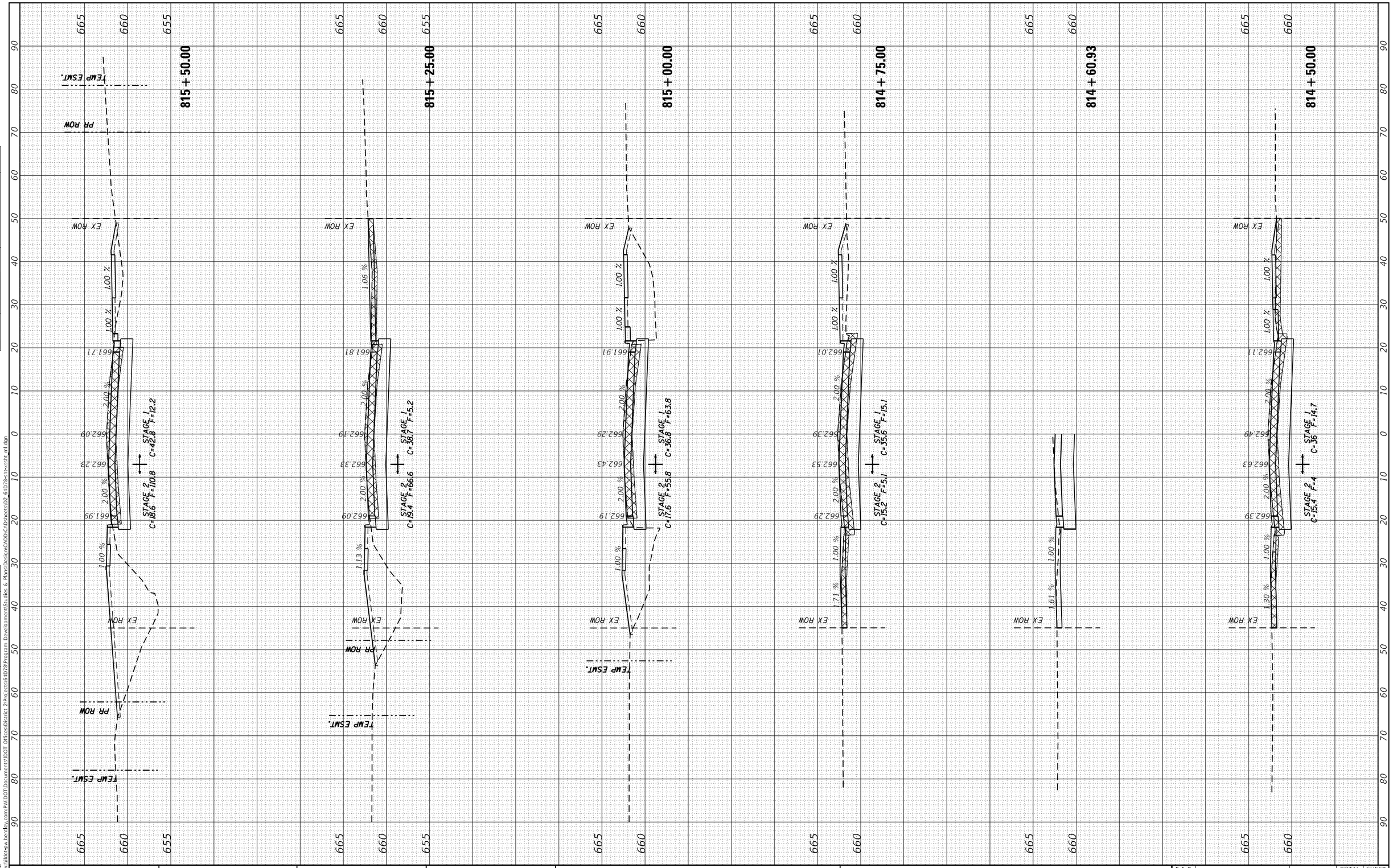

FINAL SURVEY	BY	DATE
SURVEYED		
PLOTTED		
TEMPLATE		
AREAS		
AREAS CHECKED		
NOTE BOOK		
NO.		

ORIGINAL SURVEY	BY	DATE
SURVEYED		
PLOTTED		
TEMPLATE		
AREAS		
AREAS CHECKED		
NOTE BOOK		
NO.		

MODEL: Default
FILE NAME: pw:\\ildot-pw.bentley.com:PWIDOT\Documents\IDOT Offices\District 2\Projects\64D78\Program Development\Studies & Plans\Design\CADD\CADsheets\02_64D78-sht-xsst_prl.dgn

USER NAME = hagensonjd	DESIGNED -	REVISED -
	DRAWN -	REVISED -
PLOT SCALE = 20.0000 ' / in.	CHECKED -	REVISED -
PLOT DATE = 10/22/2021	DATE -	REVISED -

STATE OF ILLINOIS
DEPARTMENT OF TRANSPORTATION

IL ROUTE 40
MAINLINE CROSS SECTIONS

SCALE: | SHEET OF SHEETS | STA. 814+50.00 TO STA. 815+50.00

F.A.P. RTE.	SECTION	COUNTY	TOTAL SHEETS	SHEET NO.
646	9R & 9RS-3	WHITESIDE	222	200

CONTRACT NO. 64D78

ILLINOIS | FED. AID PROJECT