03-11-11 LETTING ITEM 160

F.A.U. RTE.	SECTION	COUNTY	TOTAL SHEETS	SHEET NO.
9166	34-1RS-3	ST. CLAIR	87 *	1
		ILLINOIS CONTRACT NO. 76D96		

*87 + 2 = 89

FOR INDEX OF SHEETS, SEE SHEET NO. 2

STATE OF ILLINOIS
DEPARTMENT OF TRANSPORTATION
DIVISION OF HIGHWAYS

PROPOSED HIGHWAY PLANS

FAU ROUTE 9166 (ST. CLAIR AVE./LINCOLN TRAIL)
SECTION 34-1RS-3
PROJECT ACM-9166(019)
ST. CLAIR COUNTY
3P RESURFACING AND DRAINAGE

C-98-077-10

D-98-060-10

JAMES PAUL BIGGERS 25136 REGISTERED PROFESSIONAL ENGINEER OF ILLINOIS

JAMES PAUL BIGGERS, P.E.

DATE 12/16/10

LICENSE EXPIRES 11/30/11

PLANS PREPARED BY:

JOHNSON, DEPP & QUISENBERRY
CONSULTING ENGINEERS
6450 South Sixth Street Road, Suite B Springfield, Illinois 62712
Phone: (217) 529-4534 Fax: (217) 529-8278

RESURFACING OMISSION
STA. 1102+72 TO STA. 1103+24
S.N. 082-0033/34

RESURFACING OMISSION
(WB) LT. STA. 1031+40 TO LT. STA. 1032+15
(EB) RT. STA. 1031+70 TO RT. STA. 1032+45
(METRO LINK CROSSING)

BEGIN PROJECT
STA. 980+00
LAT. - 38°37'06"
LONG. - 90°06'59"

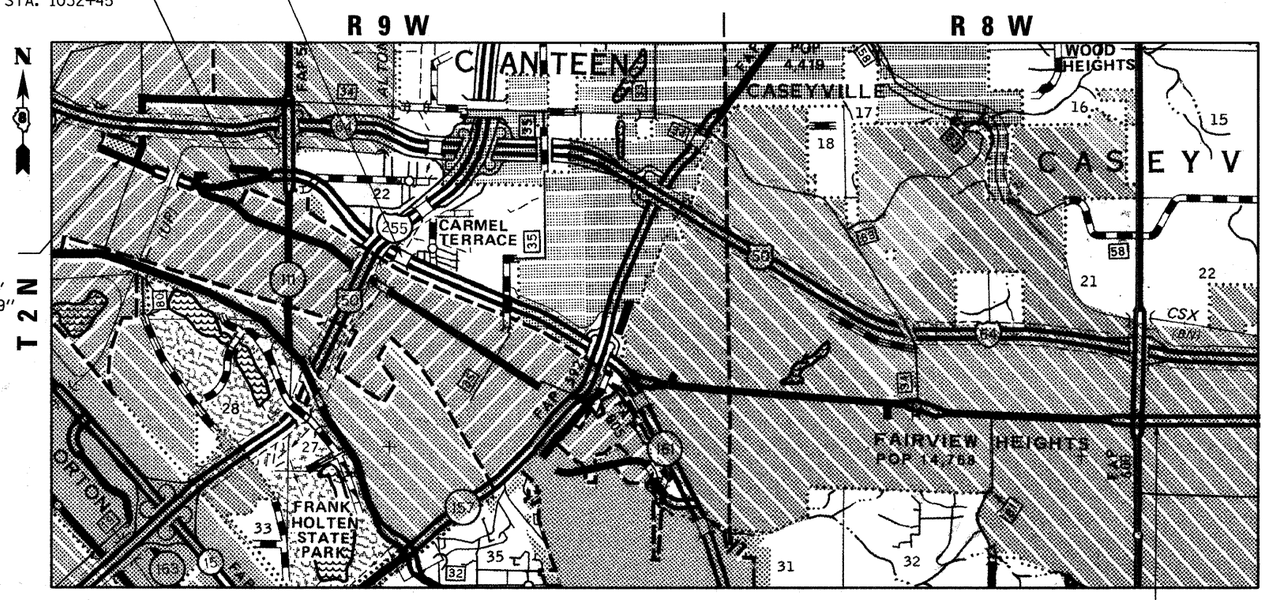

LOCATION MAP

1 MILES 0 1 2

END PROJECT
STA. 1385+25
LAT. - 38°35'34"
LONG. - 89°59'30"

GROSS LENGTH = 40,525.00 FT. = 7.675 MILE
NET LENGTH = 40,398.00 FT. = 7.651 MILE

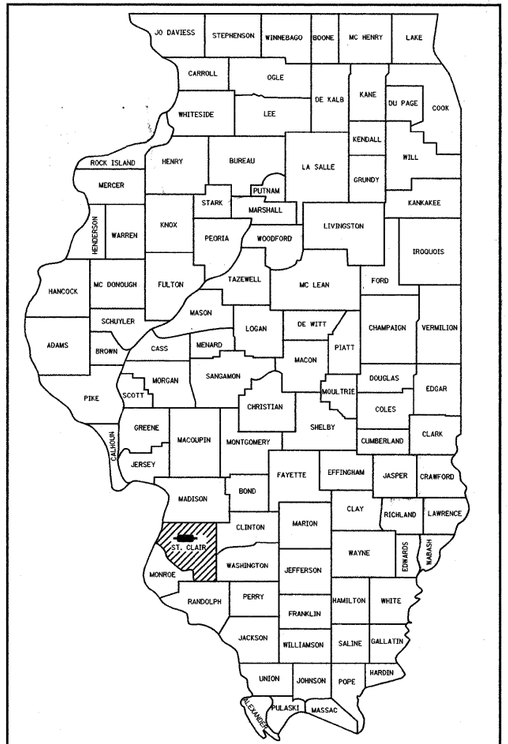

LOCATION OF SECTION INDICATED THUS:-

PRINCIPAL ARTERIAL (URBAN)
F.A.U. 9166 (ST. CLAIR AVE./LINCOLN TRAIL)
ADT (2010) - 4250(W) TO 26,400(E)
PV = 94.3%(W) TO 97.3%(E)
SU = 3.9%(W) TO 1.9%(E)
MU = 1.8%(W) TO 0.8%(E)
DESIGN SPEED = 45 MPH

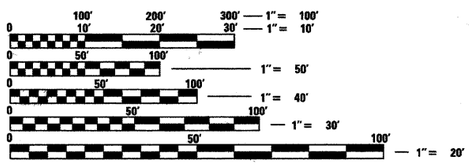

FULL SIZE PLANS HAVE BEEN PREPARED USING STANDARD ENGINEERING SCALES. REDUCED SIZED PLANS WILL NOT CONFORM TO STANDARD SCALES. IN MAKING MEASUREMENTS ON REDUCED PLANS, THE ABOVE SCALES MAY BE USED.

J.U.L.I.E.
JOINT UTILITY LOCATION INFORMATION FOR EXCAVATION
1-800-892-0123
OR 811

STATE OF ILLINOIS
DEPARTMENT OF TRANSPORTATION
DIVISION OF HIGHWAYS

SUBMITTED December 16 20 10
Mary C. Jamo
DEPUTY DIRECTOR OF HIGHWAYS, REGION 5 ENGINEER

February 4 20 11
Scott E. Stitt P.E. for
Acting ENGINEER OF DESIGN AND ENVIRONMENT

February 4 20 11
Christine M. Reed for
DIRECTOR OF HIGHWAYS, CHIEF ENGINEER

PROJECT ENGINEER: PATTI LEBEAU (618)346-3179
PROJECT MANAGER: CHERYL KEPLAR (618)346-3186

CONTRACT NO. 76D96

PRINTED BY THE AUTHORITY OF THE STATE OF ILLINOIS

INDEX OF SHEETS

HIGHWAY STANDARDS

000001-06	STANDARD SYMBOLS, ABBREVIATIONS AND PATTERNS
001001-02	AREAS OF REINFORCEMENT BARS
001006	DECIMAL OF AN INCH AND OF A FOOT
280001-05	TEMPORARY EROSION CONTROL SYSTEMS
420001-07	PAVEMENT JOINTS
420701-02	PAVEMENT FABRIC
442001-04	CLASS A PATCHES
442101-07	CLASS B PATCHES
442201-03	CLASS C AND D PATCHES
482011-03	HMA SHOULDER STRIPS/SHOULDERS WITH RESURFACING OR WIDENING AND RESURFACING PROJECTS
542546-01	FLUSH INLET BOX FOR MEDIAN
604006-04	FRAME & GRATE, TYPE 3
604061-02	FRAME & GRATE, TYPE 12
606001-04	CONCRETE CURB TYPE B AND COMBINATION CONCRETE CURB AND GUTTER
606101-04	TYPE A GUTTER (INLET, OUTLET AND ENTRANCE)
606111-03	OUTLETS, TYPE 2 FOR TYPE A GUTTER
606201-02	TYPE B GUTTER (INLET, OUTLET AND ENTRANCE)
606211-03	OUTLETS, TYPE 2 FOR TYPE B GUTTER
606301-04	PC CONCRETE ISLANDS AND MEDIANS
606306-03	CORRUGATED PC CONCRETE MEDIANS
630001-09	STEEL PLATE BEAM GUARDRAIL
630301-05	SHOULDER WIDENING FOR TYPE 1(SPECIAL) GUARDRAIL TERMINALS
631011-07	TRAFFIC BARRIER TERMINAL, TYPE 2
631031-09	TRAFFIC BARRIER TERMINAL, TYPE 6
631032-06	TRAFFIC BARRIER TERMINAL, TYPE 6A
631033-04	TRAFFIC BARRIER TERMINAL, TYPE 6B
635006-03	REFLECTOR AND TERMINAL MARKER PLACEMENT
635011-02	REFLECTOR MARKER AND MOUNTING DETAILS
642001-01	SHOULDER RUMBLE STRIPS
701101-02	OFF-ROAD OPERATIONS, MULTILANE, 15' TO 24" FROM PAVEMENT EDGE
701106-02	OFF ROAD OPERATIONS, MULTILANE, MORE THAN 15' AWAY
701421-03	LANE CLOSURE, MULTILANE, DAY OPERATIONS ONLY, FOR SPEEDS ≥ 45 MPH TO 55 MPH
701422-03	LANE CLOSURE, MULTILANE, FOR SPEEDS ≥ 45 MPH TO 55 MPH
701426-04	LANE CLOSURE, MULTILANE, INTERMITTENT OR MOVING OPERATIONS FOR SPEEDS ≥ 45 MPH
701427	LANE CLOSURE, MULTILANE, INTERMITTENT OR MOVING OPERATIONS FOR SPEEDS ≤ 40 MPH
701601-07	URBAN LANE CLOSURE, MULTILANE, 1W OR 2W WITH NONTRAVERSABLE MEDIAN
701606-07	URBAN LANE CLOSURE, MULTILANE, 2W WITH MOUNTABLE MEDIAN
701701-07	URBAN LANE CLOSURE, MULTILANE INTERSECTION
701901-01	TRAFFIC CONTROL DEVICES
728001-01	TELESCOPING STEEL SIGN SUPPORT
731001-01	BASE FOR TELESCOPING STEEL SIGN SUPPORT
780001-02	TYPICAL PAVEMENT MARKINGS
781001-03	TYPICAL APPLICATIONS RAISED REFLECTIVE PAVEMENT MARKERS
814001-02	HANDHOLES
857001-01	STANDARD PHASE DESIGNATION DIAGRAMS AND PHASE SEQUENCES
873001-02	TRAFFIC SIGNAL GROUNDING & BONDING
886001-01	DETECTOR LOOP INSTALLATIONS
886006-01	TYPICAL LAYOUTS FOR DETECTION LOOPS

THE FOLLOWING APPLICATION RATES WERE USED FOR QUANTITIY CALCULATIONS:

AGGREGATE ITEMS	2.05 TON/CU YD
HOT-MIX ASPHALT	112 LB/SQ YD/IN
AGGREGATE (PRIME COAT)	0.0015 TON/SQ YD
BITUMINOUS MATERIALS (PRIME COAT)	0.0003129 TON/ SQ YD

GENERAL NOTES

1. THE CONTRACTOR AND ENGINEER SHOULD BE AWARE THAT THE PROJECT CENTERLINE AND STATIONING SHOWN IN THESE PLANS WERE ARTIFICIALLY CREATED BY DESIGN PERSONNEL, BASED ON SCALING FROM AERIAL PHOTOGRAPHS. THE LOCATIONS OF PROPOSED DESIGN FEATURES - WHILE SHOWN IN RELATIONSHIP TO EXISTING TOPOGRAPHIC FEATURES - SHOULD BE CONSIDERED APPROXIMATE.

2. BECAUSE THIS PROJECT INVOLVES REPAIR ITEMS THAT CAN VARY IN AMOUNT DUE TO CHANGING CONDITIONS OVER TIME, THE ENGINEER MAY ADJUST THE QUANTITIES OF SOME PAY ITEMS.

3. THE CONTRACTOR SHALL VERIFY ALL DIMENSIONS AND CONDITIONS IN THE FIELD PRIOR TO CONSTRUCTION AND ORDERING OF MATERIALS.

4. THE STANDARDS AND REVISION NUMBERS LISTED SHALL APPLY TO THIS PROJECT.

5. ILLINOIS STATE LAW REQUIRES A 48-HOUR NOTICE TO BE GIVEN TO ALL UTILITIES BEFORE DIGGING. FIELD MARKING OF FACILITIES MAY BE OBTAINED BY CONTACTING J.U.L.I.E. OR FOR NON-MEMBERS, THE UTILITY COMPANY DIRECTLY. AGENCIES KNOWN TO HAVE FACILITIES WITHIN THE PROJECT AREA ARE AS FOLLOWS:

UTILITY CO.	TYPE	LOCATION
*AMEREN IP	GAS	BURIED
*AMEREN UE	ELECTRIC	BURIED & AERIAL
*AT&T ILLINOIS	COMMUNICATIONS	BURIED & AERIAL
*BUCKEYE PARTNERS L.P. - WOOD RIVER PIPELINE	PIPELINE	BURIED
*CASEYVILE TOWNSHIP ADVANCED WASTEWATER TREATMENT SYSTEM	SANITARY SEWER	BURIED
*CENTERPOINT ENERGY	PIPELINE	BURIED
*CHARTER COMMUNICATIONS, INC	CABLE TV	BURIED & AERIAL
*CITY OF EAST ST. LOUIS	LIGHTING	BURIED
*EAST ST. LOUIS HOUSING AUTHORITY	COMMUNICATIONS	BURIED
*CITY OF FAIRVIEW HEIGHTS	SANITARY SEWER	BURIED
*ILLINOIS AMERICAN WATER COMPANY	WATER	BURIED
*METRO	COMMUNICATIONS	BURIED & AERIAL
*CITY OF O'FALLON	LIGHTING	BURIED
*CITY OF O'FALLON	WATER & SANITARY SEWER	BURIED
*PAETEC	COMMUNICATIONS	BURIED & AERIAL
*QWEST COMMUNICATIONS	COMMUNICATIONS	BURIED & AERIAL
*SHO-ME TECHNOLOGIES	COMMUNICATIONS	BURIED

MEMBERS OF J.U.L.I.E. (800)-892-0123 OR 811 ARE INDICATED BY *. NON-J.U.L.I.E. MEMBERS MUST BE NOTIFIED INDIVIDUALLY.

6. PROTECTIVE COAT SHALL BE APPLIED TO ALL GUTTER FLAGS, FACE OF CURB, AND MEDIAN SURFACE.

7. MIXTURES FOR JOINTS, CRACKS, AND FLANGEWAYS SHALL BE PAID FOR ACCORDING TO ARTICLE 109.04 OF THE STANDARD SPECIFICATIONS. COST INCLUDED IN THE CONCRETE PAY ITEM

8. THE THICKNESS OF THE HMA MIXTURE SHOWN ON THE PLANS IS THE NOMINAL THICKNESS. DEVIATIONS FROM THE NOMINAL THICKNESS WILL BE PERMITTED WHEN SUCH DEVIATIONS OCCUR
DUE TO IRREGULARITIES IN THE EXISTING SURFACE OR BASE ON WHICH THE HMA MIXTURE IS PLACED.

9. ANY EARTHWORK ASSOCIATED WITH REMOVAL OR PLACEMENT OF THE CURB, GUTTER AND COMBINATION CURB & GUTTER SHALL BE INCLUDED IN THE COST FOR THE CURB, GUTTER AND COMBINATION CONCRETE CURB & GUTTER.

10. IF ANY UNSUITABLE MATERIAL IS ENCOUNTERED DURING CONSTRUCTION, IT WILL BE NECESSARY TO REMOVE THE UNSUITABLE MATERIAL AND REPLACE IT WITH A SUITABLE MATERIAL AS APPROVED BY THE ENGINEER. THIS WORK WILL BE PAID FOR ACCORDING TO ARTICLE 202.08 & 109.04 OF THE STANDARD SPECIFICATIONS.

11. ALL EARTH AREAS DISTURBED WITHIN THE PROJECT LIMITS FOR ANY REASON SHALL BE SEEDED WITH CLASS 2 SEEDING AS DIRECTED BY THE ENGINEER. NUTRIENTS SHALL CONFORM TO ARTICLE 250.04. THIS WORK WILL NOT BE MEASURED FOR PAYMENT BUT WILL BE CONSIDERED INCLUDED IN THE COST OF THE VARIOUS EXCAVATION AND GRADING OPERATIONS.

12. MULCH, UNLESS OTHERWISE PERMITTED BY THE ENGINEER, SHALL CONFORM TO METHOD 2, PROCEDURE 2, AS SPECIFIED IN ARTICLE 251.03. THIS WORK WILL NOT BE MEASURED FOR PAYMENT BUT WILL BE CONSIDERED INCLUDED IN THE COST OF THE VARIOUS EXCAVATION AND GRADING OPERATIONS.

13. THE FOLLOWING MIXTURE REQUIREMENTS ARE APPLICABLE FOR THIS PROJECT:

MIXTURE USE	SURFACE	POLY-LEVEL BINDER	INCIDENTAL SURF	BASE CRSE/BINDER	SHOULDERS >= 2.25"	SHOULDERS < 2.25"	PATCHING
AC/PG	SBS 76-22	SBS 76-22	PG 64-22	PG 64-22	PG 64-22	PG 64-22	PG 64-22
RAP % (MAX)	See Spec.	See Spec	See Spec	See Spec	See Contract RAP Special Provison	See Contract RAP Special Provison	10%
DESIGN AIR VOIDS	4.0% @ Ndes=90	4.0% @ Ndes=50	4.0% @ Ndes=90	4.0% @ Ndes=90			4.0% @ Ndes=90
MIX COMPOSITION (GRADATION MIXTURE)	IL 12.5/9.5	IL 4.75		IL-19.0	**2.0% @ Ndes=30 NMAS 3/4"	**2.0% @ Ndes=30 NMAS 3/4"	IL-19.0
FRICTION AGGREGATE	MIXTURE "D"	MIXTURE "C"	MIXTURE "D"	MIXTURE "B"			MIXTURE "B"

** TOP LIFT SHOULDERS - DESIGN THIS MIX AT 2.0% VOIDS AND ADD ASPHALT TO REDUCE VOIDS TO 1.5%.

PLAN QUANTITIES FOR BITUMINOUS CONCRETE SURFACE COURSE ITEMS ARE CALCULATED USING A UNIT WEIGHT OF 112 LB/SQ YD/IN (59.8 KG/SQ M/25 mm) THICKNESS.

14. EXISTING TREES THAT ARE NOT SHOWN ON THE PLANS AS "TO BE REMOVED" SHALL REMAIN UNDAMAGED.

15. SAW CUTTING ON ALL EDGES FOR REMOVAL ITEMS SHALL BE INCLUDED IN THE COST OF THE REMOVAL ITEM AS INDICATED IN AND IN ACCORDANCE WITH SECTION 440 OF THE STANDARD SPECIFICATIONS.

16. ALL DIMENSIONS ARE SHOWN IN FEET UNLESS NOTED. PAVEMENT THICKNESS, CULVERT SIZE, TRAFFIC SIGNAL CONDUIT SIZES, AND PAVEMENT MARKING WIDTHS ARE SHOWN IN INCHES UNLESS OTHERWISE NOTED.

17. 48" "ROAD CONSTRUCTION AHEAD" SIGNS SHALL BE PLACED AT THE BEGINNING AND END OF THE PROJECT PLUS AT INTERSECTING SIDE ROADS, AND WILL BE INCLUDED IN THE TRAFFIC CONTROL PAY ITEMS. ALL CONSTRUCTION SIGNS SHALL BE FLUORESCENT ORANGE.

18. EXCAVATION ADJACENT TO EDGE OF PAVEMENT SHALL BE PROTECTED WITH EXTENDED LEG BARRICADES WITH STEADY-BURN LIGHTS.

19. SHORT-TERM PAVEMENT MARKING SHALL BE APPLIED TO THE MILLED, BINDER, AND FINAL BITUMINOUS SURFACE. ONLY THE QUANTITY REMOVED FROM THE FINAL SURFACE SHALL BE PAID
AS WORK ZONE PAVEMENT MARKING REMOVAL. A QUANTITY FOR TEMPORARY PAVEMENT MARKING EQUAL TO THE AMOUNT OF PERMANENT PAVEMENT MARKING HAS BEEN ADDED TO THE PLANS.

20. ALL TEMPORARY PAVEMENT MARKINGS WILL BE PLACED IN SUCH A MANNER SO AS NOT TO INTERFERE WITH THE PLACEMENT OF PERMANENT PAVEMENT MARKINGS.COST INLUDED IN REMOVAL OPERATION.

21. SHOULDER WIDENING FOR THE TRAFFIC BARRIER TERMINAL TYPE 1, SPECIAL (TANGENT) SHALL BE INCLUDED IN THE UNIT PRICE OF THE TRAFFIC BARRIER TERMINAL TYPE 1, SPECIAL (TANGENT) AND CONSTRUCTED ACCORDING TO STANDARD 630301.

22. CHANGEABLE MESSAGE SIGNS SHALL BE INSTALLED (2 WEEKS) PRIOR TO CONSTRUCTION AT THE FOLLOWING LOCATIONS, AS DIRECTED BY THE ENGINNER:

WEST END OF PROJECT
NORTH IL 111
SOUTH IL 111
NORTH IL 157
SOUTH IL 157
SOUTH IL 161
NORTH IL 159
SOUTH IL 159
EAST END OF PROJECT

THE CONTRACTOR SHALL MODIFY THE MESSAGE ON EACH SIGN AS DIRECTED BY THE ENGINEER, AS NEEDED.
THE CONTRACTOR SHALL BE AWARE THAT THE MESSAGE BOARDS MAY REQUIRE RELOCATION THROUGHOUT THE DURATION OF THE PROJECT. NO ADDITIONAL COMPENSATION WILL BE ALLOWED
FOR RELOCATIONS. RELOCATION SHALL BE PAID FOR AS 109.04.

23. THE CONTRACTOR SHOULD BE AWARE THAT EXISTING CONCRETE PATCHES SHALL BE MILLED AS PART OF THE PROPOSED HMA SURFACE REMOVAL. NO ADDITIONAL COMPENSATION WILL BE ALLOWED FOR THE MILLING OF THE CONCRETE.

24. FOR STABILIZATION, A MINIMUM OF 16 SANDBAGS PER BARRICADE SHALL BE PLACED ON ALL TYPE III BARRICADES.

25. THE DISTRICT EIGHT BUREAU OF OPERATIONS SHALL BE NOTIFIED AT LEAST 10 CALENDAR DAYS PRIOR TO PLACEMENT OF THE FINAL PAVEMENT MARKINGS.

26. THE LENGTHS OF GUARDRAIL REMOVAL SPECIFIED INCLUDES THE ENTIRE RUN OF GUARDRAIL, INCLUDING TRAFFIC BARRIER TERMINALS, ETC.

27. ALL TRAFFIC CONTROL DEVICES SHALL BE SKID MOUNTED.

28. ALL EXCAVATION REQUIRED FOR THIS PROJECT SHALL BE USED OR PROPERLY DISPOSED OF WITHIN THE PROJECT RIGHT OF WAY AS DIRECTED BY THE ENGINEER AND SHALL MEET THE REQUIREMENTS OF ARTICLE 202.03 OF THE STANDARD SPECIFICATIONS.

29. ALL LEVELING BINDER OR BINDER SHALL BE GIVEN A FOG COAT (0.13 gal/sy) OF PRIME BEFORE THE SURFACE COURSE IS PLACED WHEN DIRECTED BY THE ENGINEER.
THE FOG COAT WILL BE PAID FOR AT THE CONTRACT UNIT PRICE PER TON FOR BITUMINOUS MATERIALS (PRIME COAT) AND NO ADDITIONAL COMPENSATION WILL BE ALLOWED.

30. BITMINOUS MATERIAL (PRIME COAT) SHALL BE APPLIED TO MILLED SURFACES AT THE RATE SHOWN IN THE PLANS AND WILL BE PAID FOR AT THE CONTRACT UNIT PRICE PER TON FOR BITUMINOUS MATERIALS (PRIME COAT).

COMMITMENTS

NONE

LANE RESTRICTIONS SCHEDULE (RUBY LANE THROUGH IL 159 INTERSECTION)

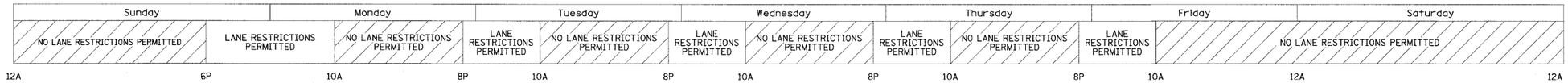

FILE NAME = c:\pw_work\pwidot\conoverpj\d0182767\sheets_enga.dgn	USER NAME = conoverpj	DESIGNED - ___	REVISED - ___	STATE OF ILLINOIS DEPARTMENT OF TRANSPORTATION	WORKING RESTRICTIONS	F.A.U. RTE.	SECTION	COUNTY	TOTAL SHEETS	SHEET NO.
		DRAWN - ___	REVISED - ___			9166	34-1RS-3	ST. CLAIR	87	2A
	PLOT SCALE = 50.0000 ' / IN.	CHECKED - ___	REVISED - ___					CONTRACT NO. 76D96		
	PLOT DATE = 1/24/2011	DATE - _____	REVISED - ___		SCALE: _____ SHEET NO. __ OF ___ SHEETS STA. _____ TO STA. _____	FED. ROAD DIST. NO. _	ILLINOIS	FED. AID PROJECT		

SUMMARY OF QUANTITIES

SUMMARY OF QUANTITIES			TOTAL QUANTITIES	CONSTRUCTION TYPE CODE		
CODE NO	ITEM	UNIT		0005 ROADWAY 80 % FED/ 20 % STATE	-------	-------
20100210	TREE REMOVAL (OVER 15 UNITS DIAMETER)	UNIT	36	36		
20200100	EARTH EXCAVATION	CU YD	2940	2940		
31101200	SUBBASE GRANULAR MATERIAL, TYPE B 4"	SQ YD	7131	7131		
35501316	HOT-MIX ASPHALT BASE COURSE, 8"	SQ YD	403	403		
35501324	HOT-MIX ASPHALT BASE COURSE, 10"	SQ YD	7131	7131		
40600200	BITUMINOUS MATERIALS (PRIME COAT)	TON	73	73		
40600300	AGGREGATE (PRIME COAT)	TON	371	371		
X4060826	POLYMERIZED LEVELING BINDER (MACHINE METHOD), IL-4.75, N50	TON	10313	10313		
40600990	TEMPORARY RAMP	SQ YD	1488	1488		
40603545	POLYMERIZED HOT-MIX ASPHALT SURFACE COURSE, MIX "D", N90	TON	20629	20629		
40800050	INCIDENTAL HOT-MIX ASPHALT SURFACING	TON	107	107		
42001300	PROTECTIVE COAT	SQ YD	11050	11050		
44000158	HOT-MIX ASPHALT SURFACE REMOVAL, 2 1/4"	SQ YD	237516	237516		
44000300	CURB REMOVAL	FOOT	244	244		
44000400	GUTTER REMOVAL	FOOT	15946	15946		
44000500	COMBINATION CURB AND GUTTER REMOVAL	FOOT	17328	17328		
44003100	MEDIAN REMOVAL	SQ FT	90356	90356		
~~44200148~~	~~PAVEMENT PATCHING, TYPE I, 12 INCH~~	~~SQ YD~~				
44200168	PAVEMENT PATCHING, TYPE II, 14 INCH	SQ YD	488	488		
44200172	PAVEMENT PATCHING, TYPE III, 14 INCH	SQ YD	175	175		
44200174	PAVEMENT PATCHING, TYPE IV, 14 INCH	SQ YD	215	215		
48102100	AGGREGATE WEDGE SHOULDER, TYPE B	TON	287	287		
48203100	HOT-MIX ASPHALT SHOULDERS	TON	552	552		
54244405	FLUSH INLET BOX FOR MEDIAN, STANDARD 542546	EACH	1	1		
60250200	CATCH BASINS TO BE ADJUSTED	EACH	1	1		
60260500	INLETS TO BE ADJUSTED WITH NEW TYPE 3 FRAME AND GRATE	EACH	3	3		
60404300	FRAMES AND GRATES, TYPE 3	EACH	3	3		
60404900	FRAMES AND GRATES, TYPE 12	EACH	10	10		
60405800	GRATES AND COVERS, TYPE 2A	EACH	2	2		
60500060	REMOVING INLETS	EACH	1	1		

SUMMARY OF QUANTITIES			TOTAL QUANTITIES	CONSTRUCTION TYPE CODE		
CODE NO	ITEM	UNIT		0005 ROADWAY 80 % FED/ 20 % STATE	-------	-------
60600095	CLASS SI CONCRETE (OUTLET)	CU YD	14	14		
~~X6060097~~	~~CLASS SI CONCRETE (OUTLET), SPECIAL~~	~~CU YD~~	~~9~~	~~9~~		
60600605	CONCRETE CURB, TYPE B	FOOT	244	244		
60602500	CONCRETE GUTTER, TYPE A	FOOT	4154	4154		
60602800	CONCRETE GUTTER, TYPE B	FOOT	8520	8520		
60603800	COMBINATION CONCRETE CURB AND GUTTER, TYPE B-6.12	FOOT	109	109		
60605000	COMBINATION CONCRETE CURB AND GUTTER, TYPE B-6.24	FOOT	5505	5505		
60608600	COMBINATION CONCRETE CURB AND GUTTER, TYPE M-6.06	FOOT	2164	2164		
60609200	COMBINATION CONCRETE CURB AND GUTTER, TYPE M-6.12	FOOT	5094	5094		
60618300	CONCRETE MEDIAN SURFACE, 4 INCH	SQ FT	34994	34994		
60622400	CONCRETE MEDIAN, TYPE SM-6.06	SQ FT	2132	2132		
60622800	CONCRETE MEDIAN, TYPE SM-6.12	SQ FT	4597	4597		
60624600	CORRUGATED MEDIAN	SQ FT	355	355		
*63000001	STEEL PLATE BEAM GUARDRAIL, TYPE A, 6 FOOT POSTS	FOOT	6675	6675		
*63100045	TRAFFIC BARRIER TERMINAL, TYPE 2	EACH	14	14		
*63100085	TRAFFIC BARRIER TERMINAL, TYPE 6	EACH	2	2		
*63100087	TRAFFIC BARRIER TERMINAL, TYPE 6A	EACH	2	2		
*63100089	TRAFFIC BARRIER TERMINAL, TYPE 6B	EACH	1	1		
*63100167	TRAFFIC BARRIER TERMINAL, TYPE 1 (SPECIAL) TANGENT	EACH	20	20		
63200310	GUARDRAIL REMOVAL	FOOT	6153	6153		
64200105	SHOULDER RUMBLE STRIPS	FOOT	12,380	12,380		
67000400	ENGINEER'S FIELD OFFICE, TYPE A	CAL MO	7	7		
67100100	MOBILIZATION	L SUM	1	1		
70100310	TRAFFIC CONTROL AND PROTECTION, STANDARD 701421	L SUM	1	1		
70100320	TRAFFIC CONTROL AND PROTECTION, STANDARD 701422	L SUM	1	1		
70102625	TRAFFIC CONTROL AND PROTECTION, STANDARD 701606	L SUM	1	1		

*SPECIALTY ITEM

FILE NAME = c:\pw_work\pwidot\keplarcl\d2182767\sheets_enga.dgn	USER NAME = keplarcl	DESIGNED - ___	REVISED - ___
	PLOT SCALE = 50.0000 ' / IN.	DRAWN - ___	REVISED - ___
	PLOT DATE = 12/17/2010	CHECKED - ___	REVISED - ___
		DATE - _____	REVISED - ___

STATE OF ILLINOIS
DEPARTMENT OF TRANSPORTATION

SUMMARY OF QUANTITIES

SCALE: _____ | SHEET NO. 1 OF 2 SHEETS | STA. _____ TO STA. _____

F.A.U. RTE.	SECTION	COUNTY	TOTAL SHEETS	SHEET NO.
9166	34-1RS-3	ST. CLAIR	87	3

CONTRACT NO. 76D96

FED. ROAD DIST. NO. _ | ILLINOIS | FED. AID PROJECT

SUMMARY OF QUANTITIES

SUMMARY OF QUANTITIES			TOTAL QUANTITIES	CONSTRUCTION TYPE CODE		
CODE NO	ITEM	UNIT		0005 ROADWAY 80 % FED/ 20 % STATE	-------	-------
70102630	TRAFFIC CONTROL AND PROTECTION, STANDARD 701601	L SUM	1	1		
70102635	TRAFFIC CONTROL AND PROTECTION, STANDARD 701701	L SUM	1	1		
70103815	TRAFFIC CONTROL SURVEILLANCE	CAL DA	80	80		
70106800	CHANGEABLE MESSAGE SIGN	CAL MO	63	63		
70300100	SHORT TERM PAVEMENT MARKING	FOOT	21792	21792		
70300210	TEMPORARY PAVEMENT MARKING LETTERS AND SYMBOLS	SQ FT	1599.2	1599.2		
70300220	TEMPORARY PAVEMENT MARKING - LINE 4"	FOOT	172,185	172,185		
70300250	TEMPORARY PAVEMENT MARKING - LINE 8"	FOOT	475	475		
70300260	TEMPORARY PAVEMENT MARKING - LINE 12"	FOOT	4,761	4,761		
70300280	TEMPORARY PAVEMENT MARKING - LINE 24"	FOOT	1203	1203		
70301000	WORK ZONE PAVEMENT MARKING REMOVAL	SQ FT	73,742	73,742		
*78000100	THERMOPLASTIC PAVEMENT MARKING - LETTERS AND SYMBOLS	SQ FT	1,599.2	1,599.2		
*78000200	THERMOPLASTIC PAVEMENT MARKING - LINE 4"	FOOT	172,185	172,185		
*78000500	THERMOPLASTIC PAVEMENT MARKING - LINE 8"	FOOT	475	475		
*78000600	THERMOPLASTIC PAVEMENT MARKING - LINE 12"	FOOT	4,761	4,761		
*78000650	THERMOPLASTIC PAVEMENT MARKING - LINE 24"	FOOT	1203	1203		
*78100100	RAISED REFLECTIVE PAVEMENT MARKER	EACH	1,885	1,885		
*78200300	PRISMATIC CURB REFLECTOR	EACH	482	482		
*78200410	GUARDRAIL MARKERS, TYPE A	EACH	90	90		
*78201000	TERMINAL MARKER - DIRECT APPLIED	EACH	20	20		
78300200	RAISED REFLECTIVE PAVEMENT MARKER REMOVAL	EACH	2658	2658		
80300100	LOCATING UNDERGROUND CABLE	FOOT	675	675		
88600600	DETECTOR LOOP REPLACEMENT	FOOT	17218	17218		
X2020110	GRADING AND SHAPING SHOULDERS	UNIT	32	32		
72000100	SIGN PANEL, TYPE 1	SQ FT	120	120		
72800100	TELESCOPING STEEL SIGN SUPPORT	FOOT	250	250		
73100100	BASE FOR TELESCOPING STEEL SIGN SUPPORT	EACH	22	22		

SUMMARY OF QUANTITIES			TOTAL QUANTITIES	CONSTRUCTION TYPE CODE		
CODE NO	ITEM	UNIT		0005 ROADWAY 80 % FED/ 20 % STATE	-------	-------
X4400100	PORTLAND CEMENT CONCRETE SURFACE REMOVAL (VARIABLE DEPTH)	SQ YD	1283	1283		
X4402805	ISLAND REMOVAL	SQ FT	799	799		
*X7800100	PAINT PAVEMENT MARKING - RAISED MEDIAN	SQ FT	2,315	2,315		
*X7800200	PAINT PAVEMENT MARKING CURB	FOOT	1,824	1,824		
X8950210	REBUILD EXISTING HANDHOLE TO HEAVY-DUTY HANDHOLE	EACH	7	7		
◆Z0018500	DRAINAGE STRUCTURES TO BE CLEANED	EACH	358	358		
⊙Z0076600	TRAINEES	HOUR	1,000	1,000		
Z0048665	RAILROAD PROTECTIVE LIABILITY INSURANCE	L SUM	1	1		

* SPECIALTY ITEM

◆ NON-PARTICIPATING 100% STATE

⊙ QQ42

△ NON-FACE (100% STATE)

FILE NAME = c:\pw_work\pwidot\keplarcl\d0182767\sheets_enga.dgn	USER NAME = keplarcl	DESIGNED - ___	REVISED - ___
		DRAWN - ___	REVISED - ___
	PLOT SCALE = 50.0000 ' / IN.	CHECKED - ___	REVISED - ___
	PLOT DATE = 12/17/2010	DATE - _____	REVISED - ___

STATE OF ILLINOIS
DEPARTMENT OF TRANSPORTATION

SUMMARY OF QUANTITIES

SCALE: _____ | SHEET NO. 2 OF 2 SHEETS | STA. _____ TO STA. _____

F.A.U. RTE.	SECTION	COUNTY	TOTAL SHEETS	SHEET NO.
9166	34-1RS-3	ST. CLAIR	87	4

CONTRACT NO. 76D96

FED. ROAD DIST. NO. _ | ILLINOIS | FED. AID PROJECT

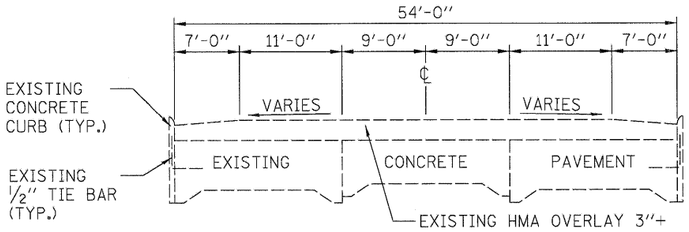

EXISTING TYPICAL SECTION

STA. 980+00 TO STA. 1000+00

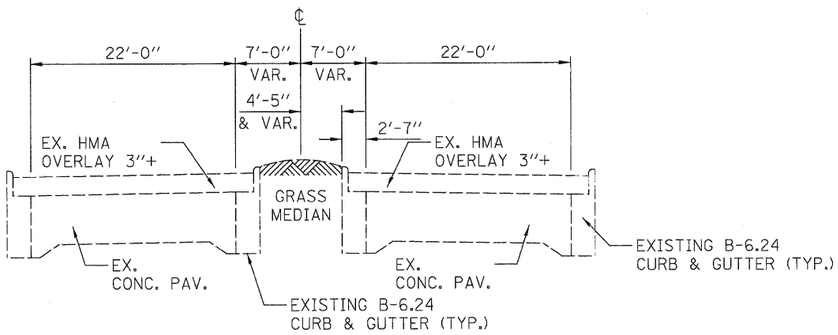

EXISTING TYPICAL SECTION

STA. 1000+00 TO STA. 1007+10 (W.B.)
STA. 1000+00 TO STA. 1007+40 (E.B.)
STA. 1010+25 TO STA. 1014+00 (W.B.)
STA. 1009+50 TO STA. 1014+00 (E.B.)

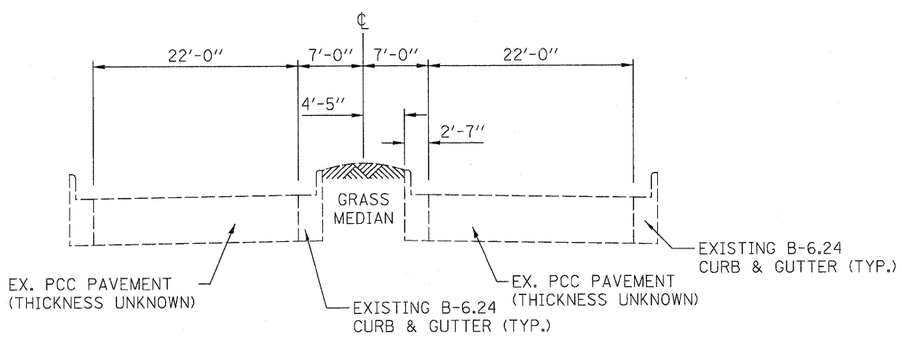

EXISTING TYPICAL SECTION

STA. 1007+10 TO STA. 1010+25 (W.B.)
STA. 1007+40 TO STA. 1009+50 (E.B.)

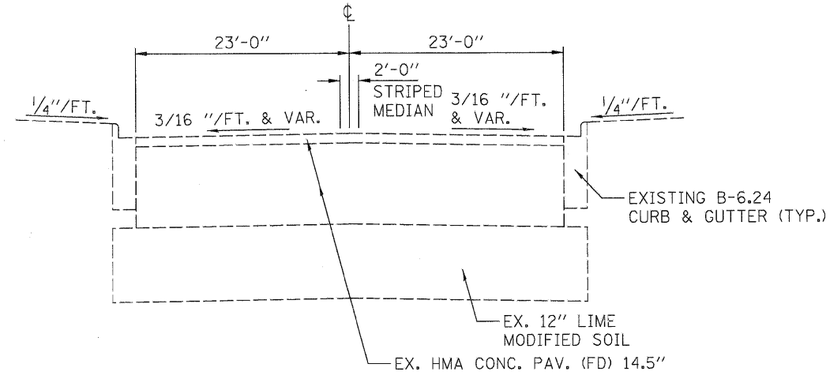

EXISTING TYPICAL SECTION

STA. 1014+00 TO STA. 1033+00

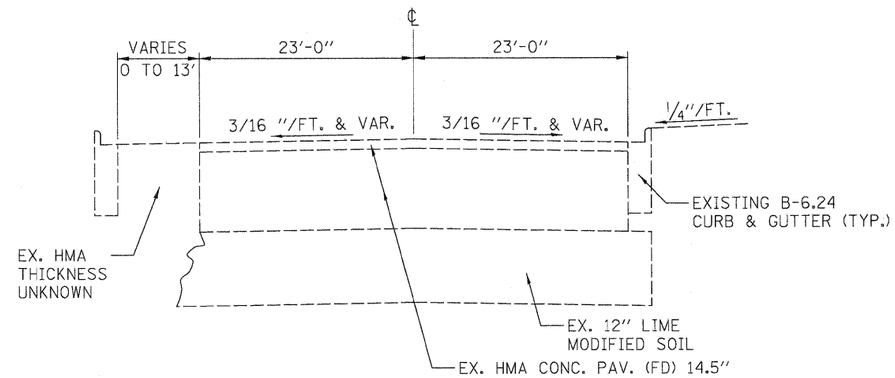

EXISTING TYPICAL SECTION

STA. 1033+00 TO STA. 1041+85

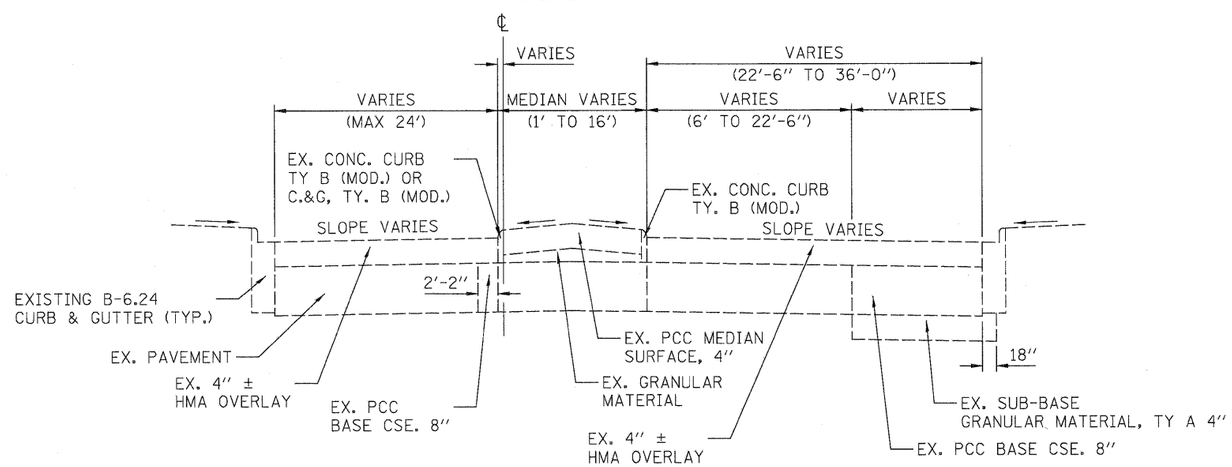

EXISTING TYPICAL SECTION

STA. 1041+85 TO STA. 1050+39

FILE NAME = ...\oadd\D876D96-sht-typical.dgn	USER NAME = SJS	DESIGNED -	REVISED -	STATE OF ILLINOIS DEPARTMENT OF TRANSPORTATION	EXISTING TYPICAL SECTIONS	F.A.U. RTE.	SECTION	COUNTY	TOTAL SHEETS / SHEET NO.
Johnson, Depp & Quisenberry CONSULTING ENGINEERS Springfield, Illinois		DRAWN -	REVISED -			9166	34-1RS-3	ST. CLAIR	87 / 5
	PLOT SCALE = 8.0000 ' / IN.	CHECKED -	REVISED -					CONTRACT NO. 76D96	
	PLOT DATE = 12/15/2010 09:35:11	DATE -	REVISED -		SCALE: / SHEET NO. OF SHEETS / STA. 975+45.58 TO STA. 990+00.00		ILLINOIS FED. AID PROJECT		

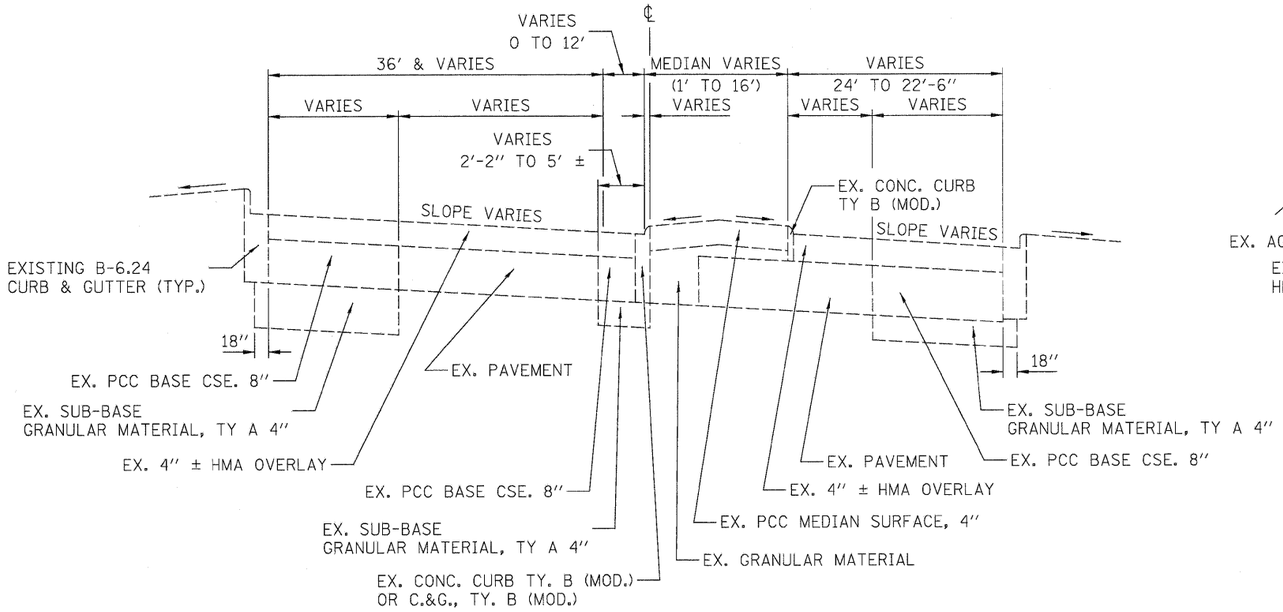

EXISTING TYPICAL SECTION

STA. 1050+39 TO STA. 1058+00

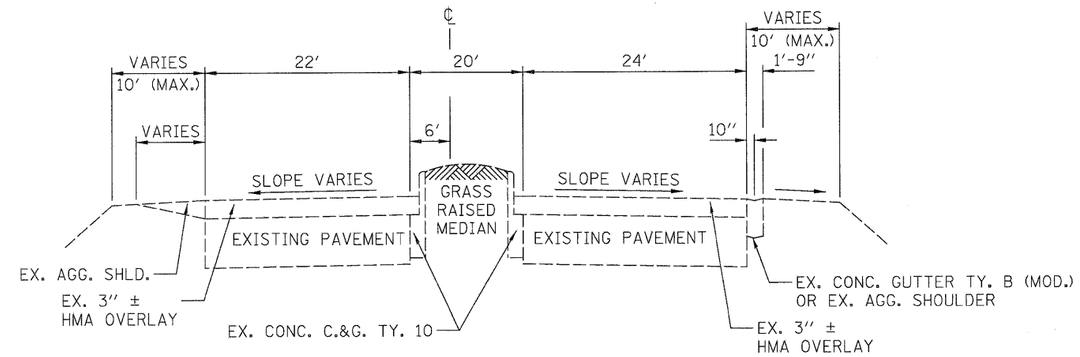

EXISTING TYPICAL SECTION

STA. 1068+00 TO STA. 1076+70

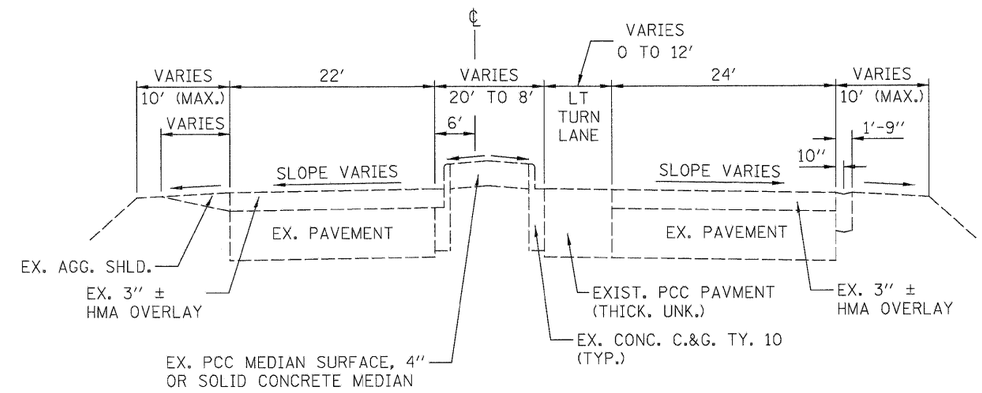

EXISTING TYPICAL SECTION

STA. 1076+70 TO STA. 1081+00

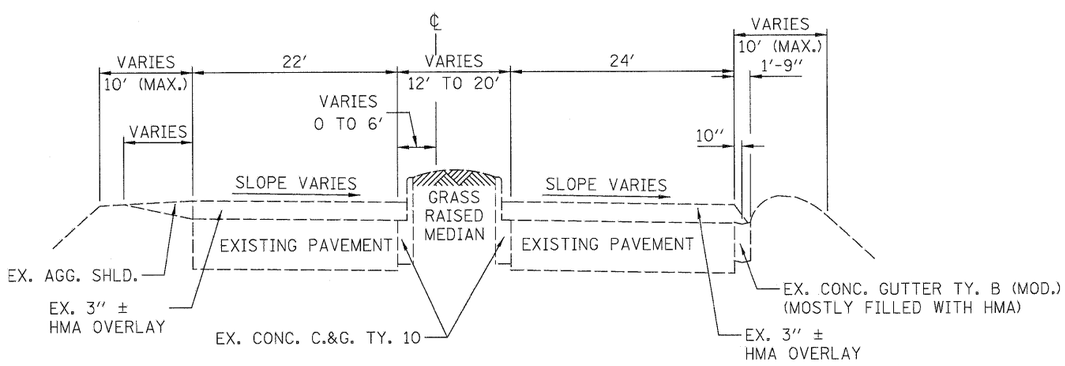

EXISTING TYPICAL SECTION

STA. 1058+00 TO STA. 1068+00

FILE NAME = ...\cadd\D876D96-sht-typical.dgn	USER NAME = SJS	DESIGNED -	REVISED -	STATE OF ILLINOIS DEPARTMENT OF TRANSPORTATION	EXISTING TYPICAL SECTIONS			F.A.U. RTE.	SECTION	COUNTY	TOTAL SHEETS	SHEET NO.
		DRAWN -	REVISED -					9166	34-1RS-3	ST. CLAIR	87	6
Johnson, Depp & Quisenberry CONSULTING ENGINEERS Springfield, Illinois	PLOT SCALE = 8.0000 ' / IN.	CHECKED -	REVISED -					CONTRACT NO. 76D96				
	PLOT DATE = 12/15/2010 09:35:11	DATE -	REVISED -		SCALE:	SHEET NO. OF SHEETS	STA. 975+45.58 TO STA. 990+00.00	ILLINOIS FED. AID PROJECT				

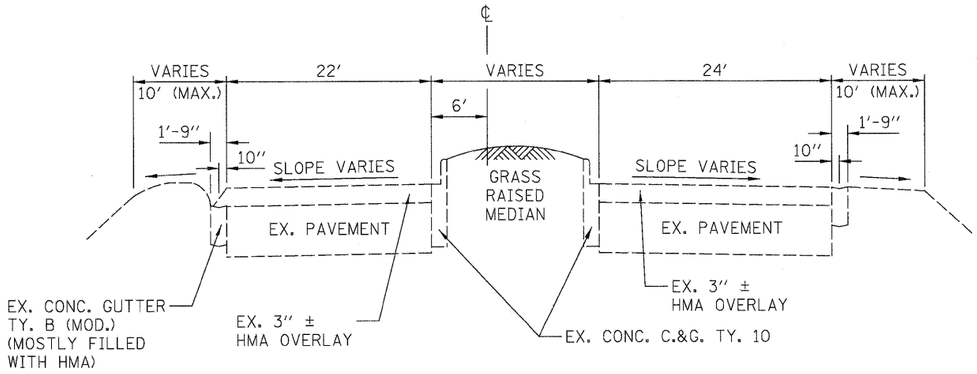

EXISTING TYPICAL SECTION

STA. 1081+00 TO STA. 1084+00

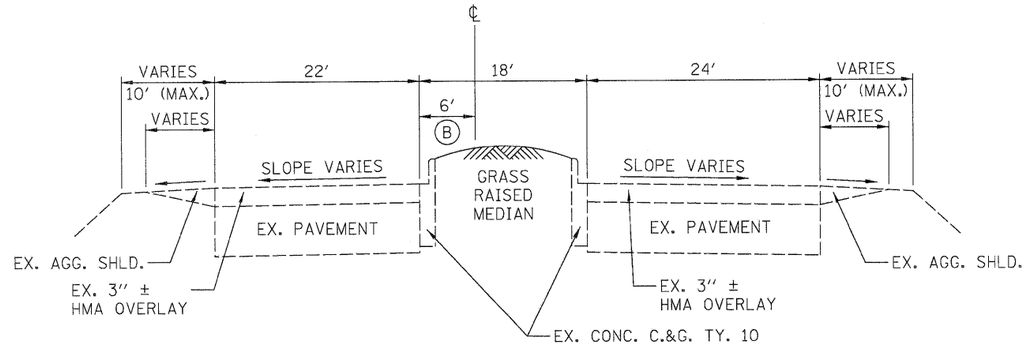

EXISTING TYPICAL SECTION

STA. 1122+70 TO STA. 1138+15
STA. 1159+00 TO STA. 1171+35 (B) VARIES 6′ TO 10′±

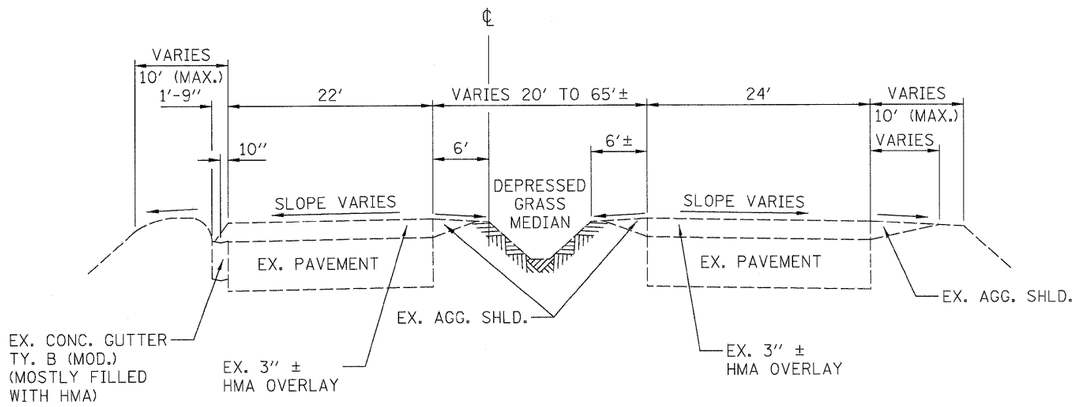

EXISTING TYPICAL SECTION

STA. 1084+00 TO STA. 1109+58

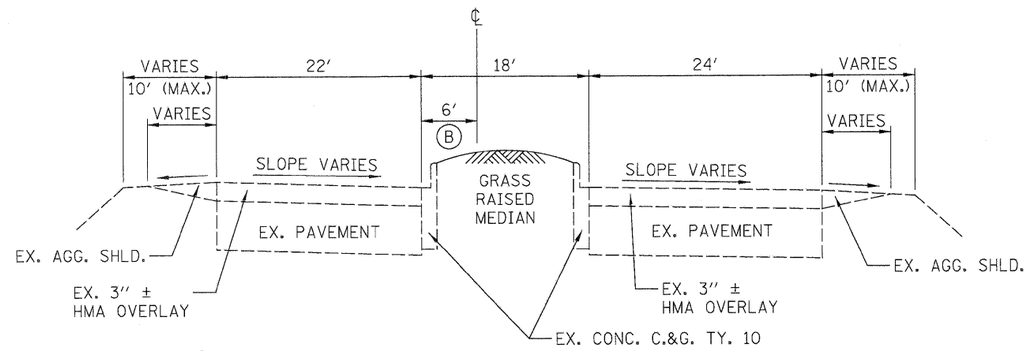

EXISTING TYPICAL SECTION

STA. 1151+25 TO STA. 1159+00 (B) VARIES 6′ TO 10′±

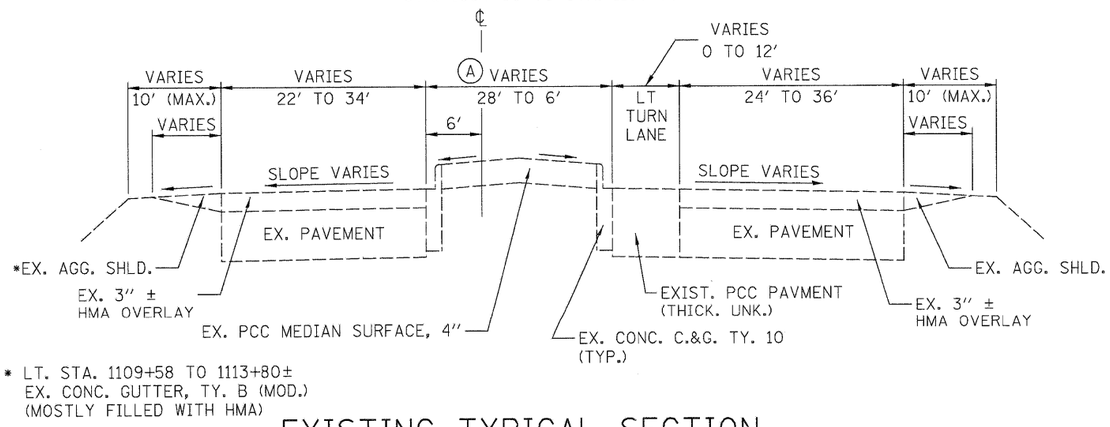

* LT. STA. 1109+58 TO 1113+80±
EX. CONC. GUTTER, TY. B (MOD.)
(MOSTLY FILLED WITH HMA)

EXISTING TYPICAL SECTION

STA. 1109+58 TO STA. 1122+70
STA. 1138+15 TO STA. 1151+25 (A) 18′ MEDIAN

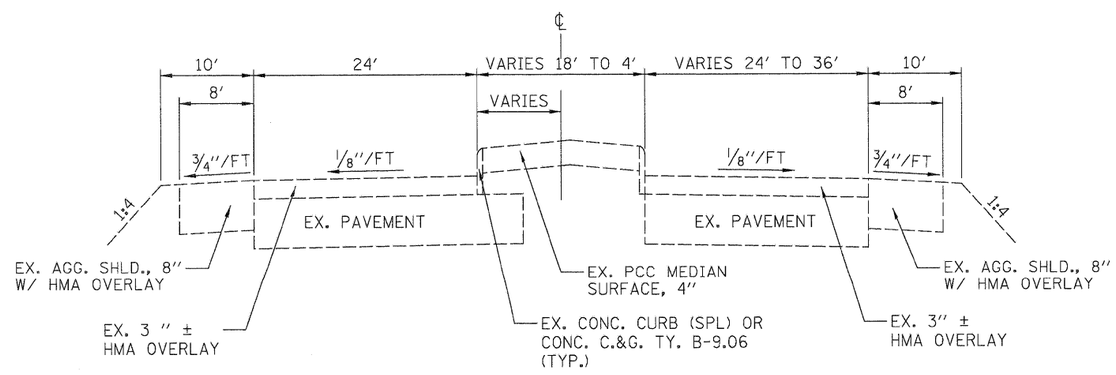

EXISTING TYPICAL SECTION

STA. 1171+35 TO STA. 1173+62

FILE NAME = ...\cadd\D876D96-sht-typical.dgn	USER NAME = SJS	DESIGNED -	REVISED -	STATE OF ILLINOIS DEPARTMENT OF TRANSPORTATION	EXISTING TYPICAL SECTIONS	F.A.U. RTE.	SECTION	COUNTY	TOTAL SHEETS	SHEET NO.
Johnson, Depp & Quisenberry CONSULTING ENGINEERS Springfield, Illinois		DRAWN -	REVISED -			9166	34-1RS-3	ST. CLAIR	87	7
	PLOT SCALE = 8.0000 ′/ IN.	CHECKED -	REVISED -					CONTRACT NO. 76D96		
	PLOT DATE = 12/15/2010 09:35:11	DATE -	REVISED -		SCALE: SHEET NO. OF SHEETS STA. 975+45.58 TO STA. 990+00.00		ILLINOIS FED. AID PROJECT			

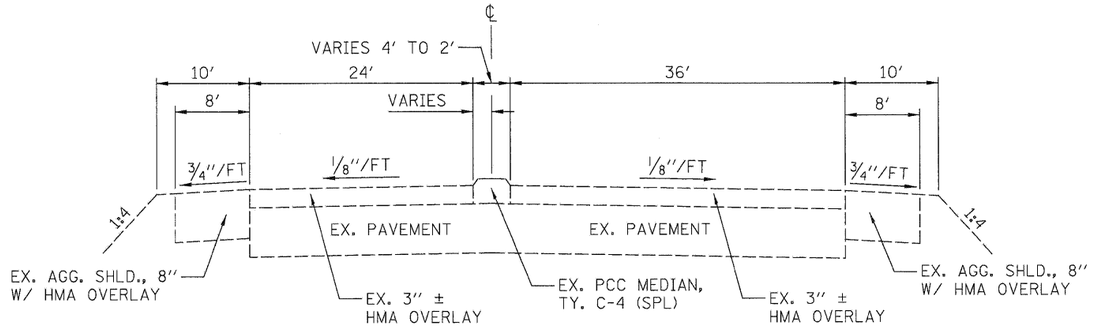

EXISTING TYPICAL SECTION

STA. 1173+62 TO STA. 1177+00

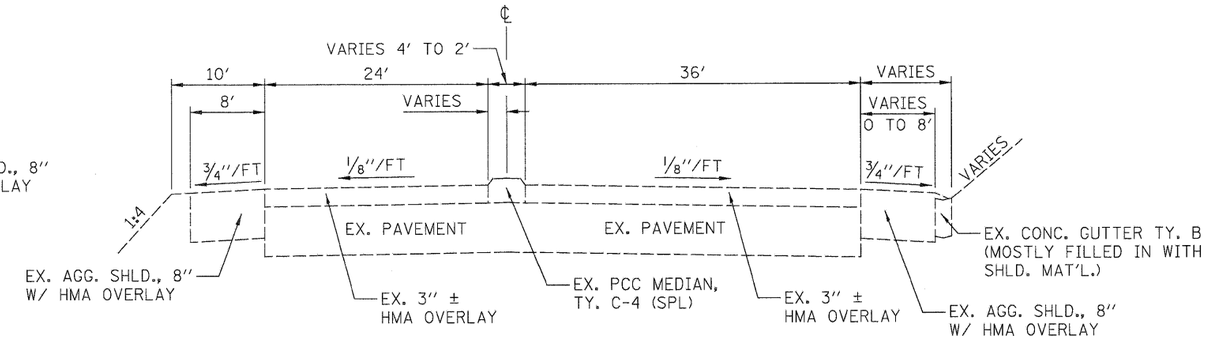

EXISTING TYPICAL SECTION

STA. 1182+50 TO STA. 1185+40

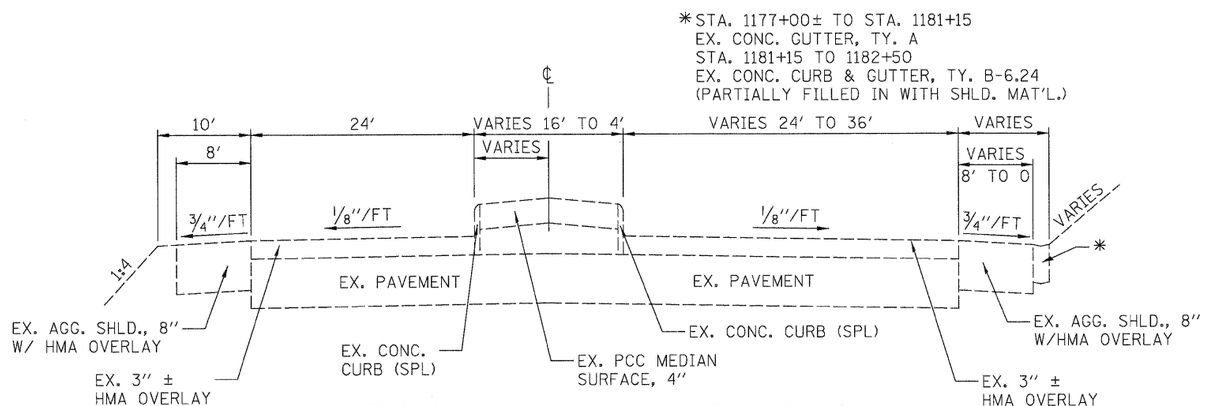

EXISTING TYPICAL SECTION

STA. 1177+00 TO STA. 1182+50

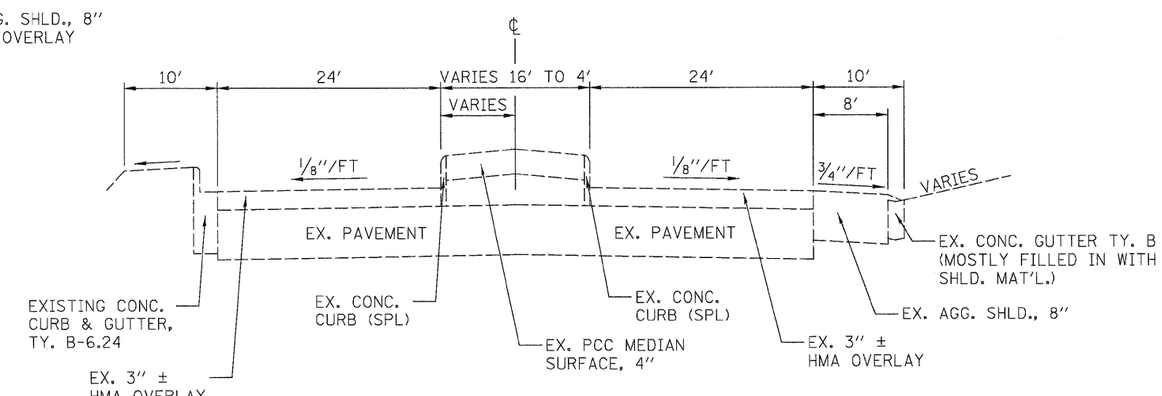

EXISTING TYPICAL SECTION

STA. 1185+40 TO STA. 1189+65

FILE NAME = ...\cadd\D876D96-sht-typical.dgn	USER NAME = SJS	DESIGNED -	REVISED -	STATE OF ILLINOIS DEPARTMENT OF TRANSPORTATION	EXISTING TYPICAL SECTIONS	F.A.U. RTE.	SECTION	COUNTY	TOTAL SHEETS / SHEET NO.
Johnson, Depp & Quisenberry CONSULTING ENGINEERS Springfield, Illinois		DRAWN -	REVISED -			9166	34-1RS-3	ST. CLAIR	87 / 8
	PLOT SCALE = 8.0000 ' / IN.	CHECKED -	REVISED -					CONTRACT NO. 76D96	
	PLOT DATE = 12/15/2010 09:35:12	DATE -	REVISED -		SCALE: SHEET NO. OF SHEETS STA. 975+45.58 TO STA. 990+00.00		ILLINOIS FED. AID PROJECT		

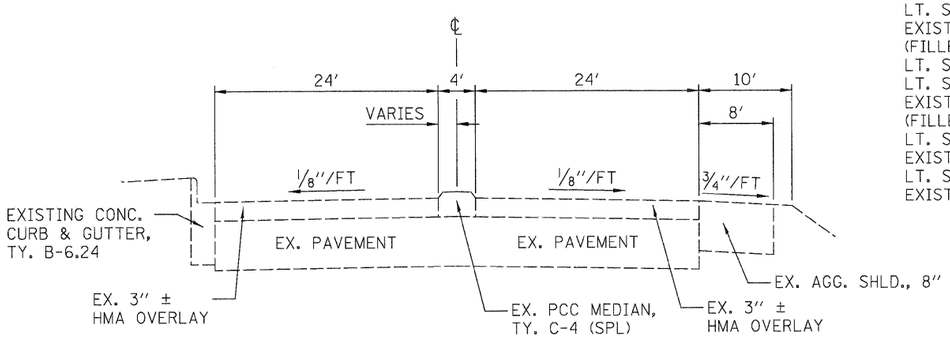

EXISTING TYPICAL SECTION

STA. 1189+65 TO STA. 1191+60

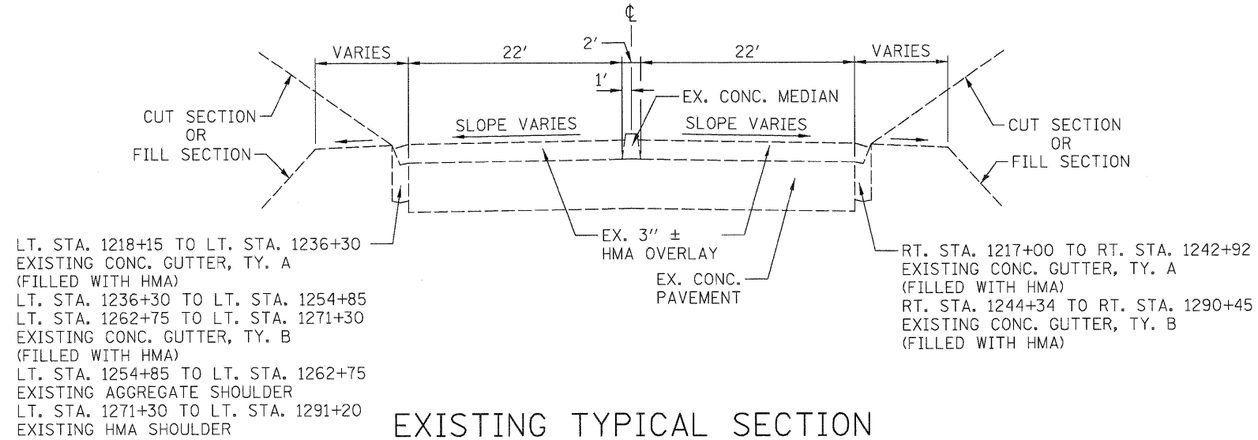

EXISTING TYPICAL SECTION

STA. 1217+00 TO STA. 1291+20
NOTE: NO EXISTING PLANS (BASED ON FIELD OBSERVATIONS)

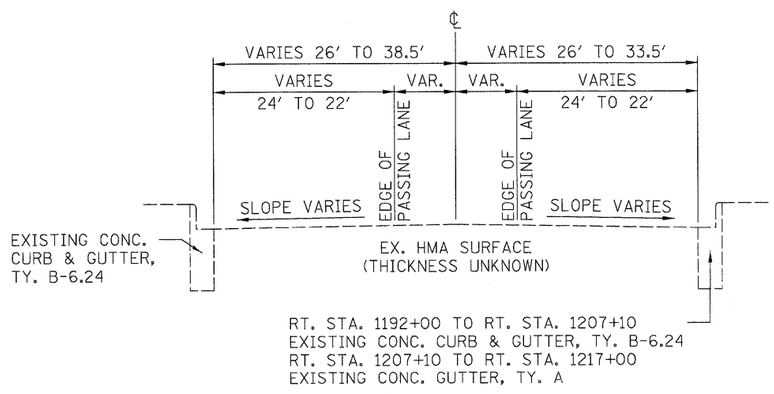

EXISTING TYPICAL SECTION

STA. 1191+60 TO STA. 1217+00
NOTE: NO EXISTING PLANS

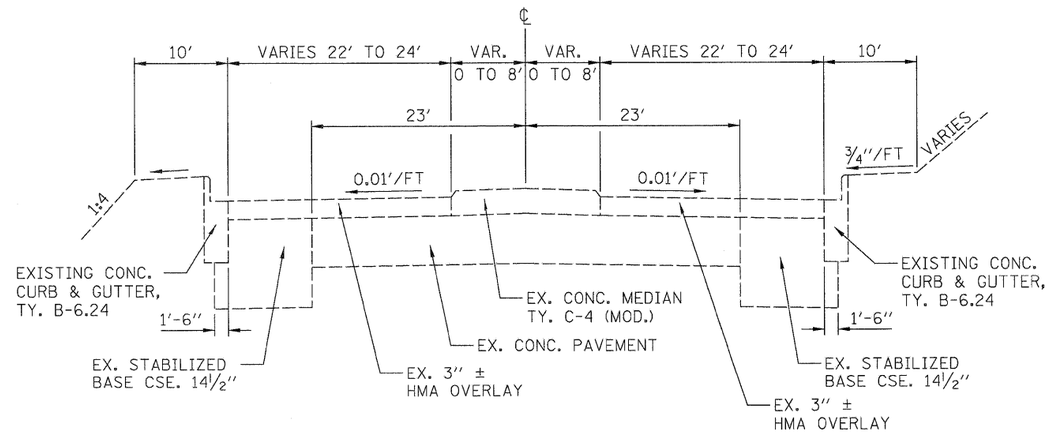

EXISTING TYPICAL SECTION

STA. 1291+20 TO STA. 1295+50

FILE NAME = ...\cadd\D876D96-sht-typical.dgn	USER NAME = SJS	DESIGNED -	REVISED -	STATE OF ILLINOIS DEPARTMENT OF TRANSPORTATION	EXISTING TYPICAL SECTIONS	F.A.U. RTE.	SECTION	COUNTY	TOTAL SHEETS	SHEET NO.
Johnson, Depp & Quisenberry CONSULTING ENGINEERS Springfield, Illinois		DRAWN -	REVISED -			9166	34-1RS-3	ST. CLAIR	87	9
	PLOT SCALE = 8.0000 ′ / IN.	CHECKED -	REVISED -					CONTRACT NO. 76D96		
	PLOT DATE = 12/15/2010 09:35:12	DATE -	REVISED -		SCALE: SHEET NO. OF SHEETS STA. 975+45.58 TO STA. 990+00.00		ILLINOIS FED. AID PROJECT			

* ADDITIONAL 12′ WHERE THERE ARE RT.-TURN/BUS STOP LANES.
(SEE PLANS FOR LOCATIONS)

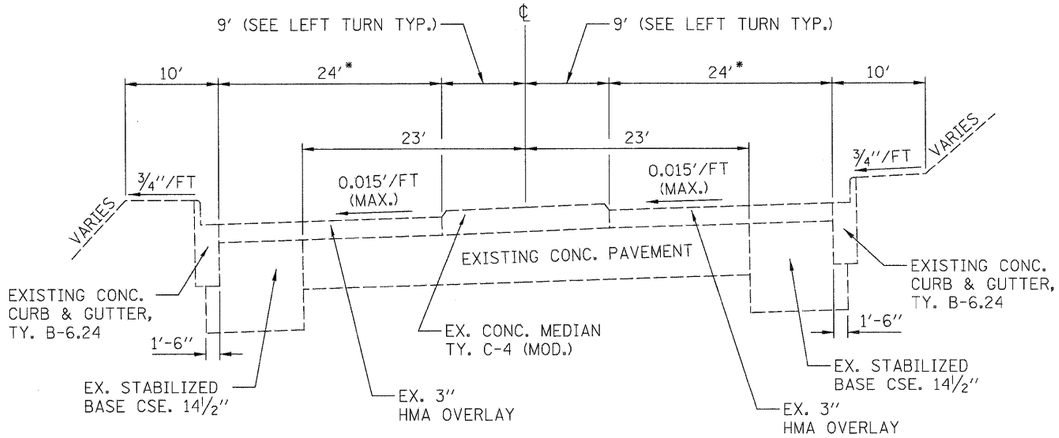

EXISTING TYPICAL SUPERELEVATED SECTION

STA. 1295+50 TO STA. 1321+00
(STA. 1295+50 TO STA. 1306+00 (FULL SUPER, LT. EDGE HIGH)
(STA. 1309+00 TO STA. 1321+00 (FULL SUPER, RT. EDGE HIGH)

* ADDITIONAL 12′ WHERE THERE ARE RT.-TURN/BUS STOP LANES.
(SEE PLANS FOR LOCATIONS)

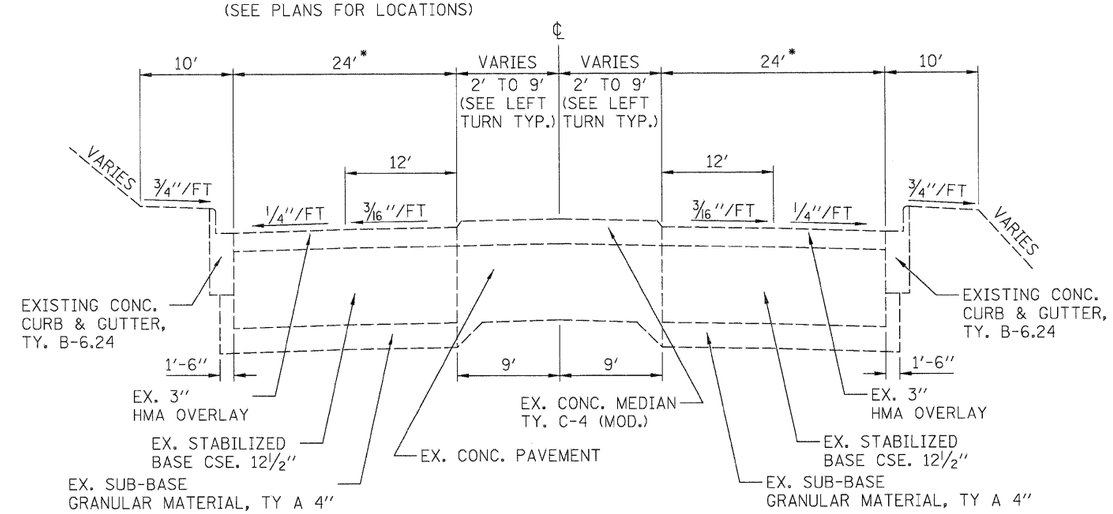

EXISTING TYPICAL SECTION

STA. 1321+00 TO STA. 1374+00

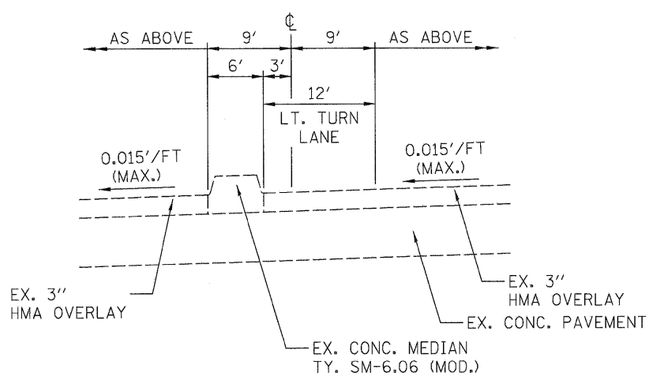

EXISTING TYPICAL SUPERELEVATED SECTION

WITH LEFT TURN
(SEE PLANS FOR LOCATIONS)

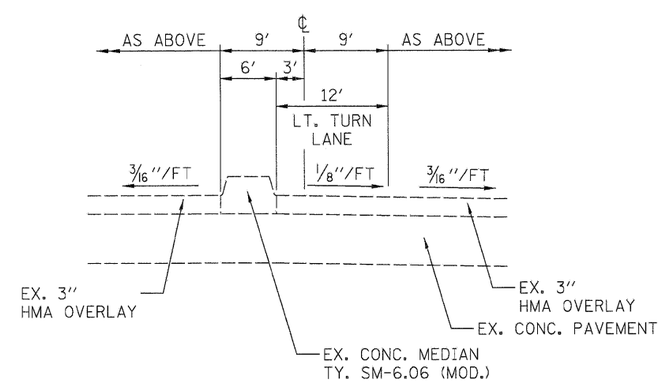

EXISTING TYPICAL SECTION WITH LEFT LANE

(SEE PLANS FOR LOCATIONS)

FILE NAME = ...\oadd\D876D96-sht-typical.dgn	USER NAME = SJS	DESIGNED -	REVISED -	STATE OF ILLINOIS DEPARTMENT OF TRANSPORTATION	EXISTING TYPICAL SECTIONS	F.A.U. RTE.	SECTION	COUNTY	TOTAL SHEETS	SHEET NO.
Johnson, Depp & Quisenberry CONSULTING ENGINEERS Springfield, Illinois		DRAWN -	REVISED -			9166	34-1RS-3	ST. CLAIR	87	10
	PLOT SCALE = 8.0000 ′ / IN.	CHECKED -	REVISED -					CONTRACT NO. 76D96		
	PLOT DATE = 12/15/2010 09:35:13	DATE -	REVISED -		SCALE: SHEET NO. OF SHEETS STA. 975+45.58 TO STA. 990+00.00		ILLINOIS FED. AID PROJECT			

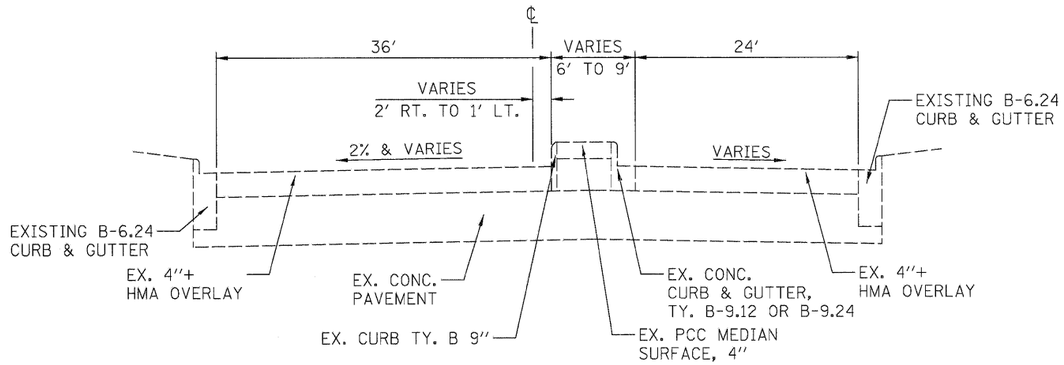

EXISTING TYPICAL SECTION

STA. 1374+00 TO STA. 1375+44

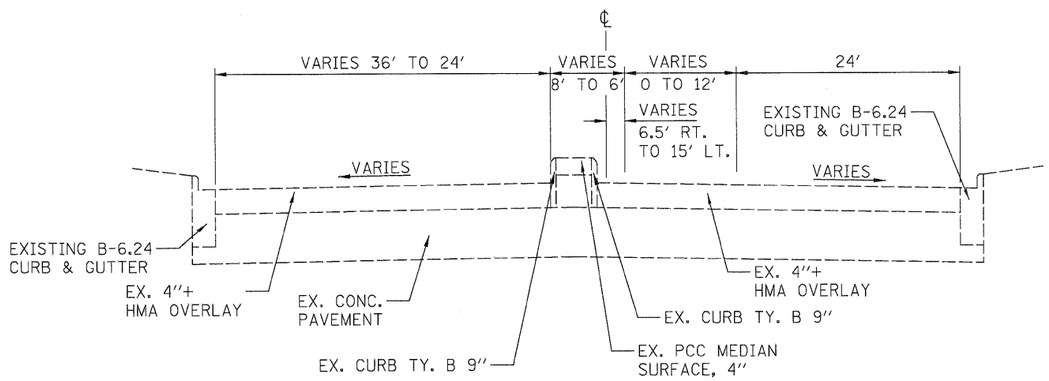

EXISTING TYPICAL SECTION

STA. 1375+44 TO STA. 1376+88

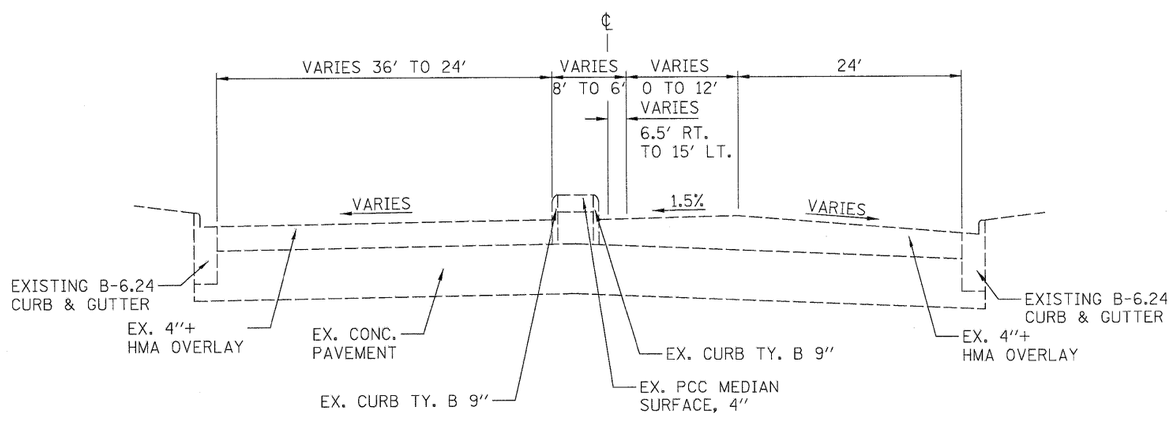

EXISTING TYPICAL SECTION

STA. 1376+88 TO STA. 1378+32

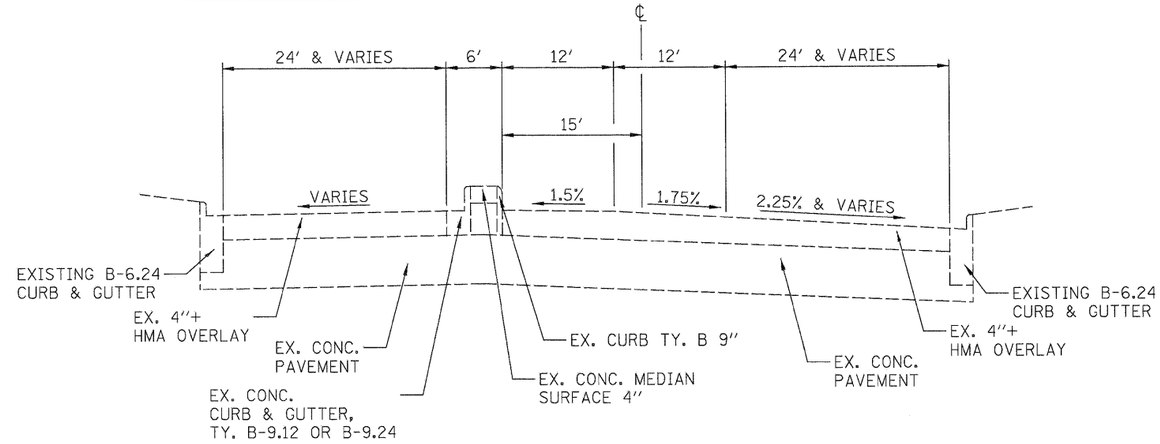

EXISTING TYPICAL SECTION

STA. 1378+32 TO STA. 1381+00

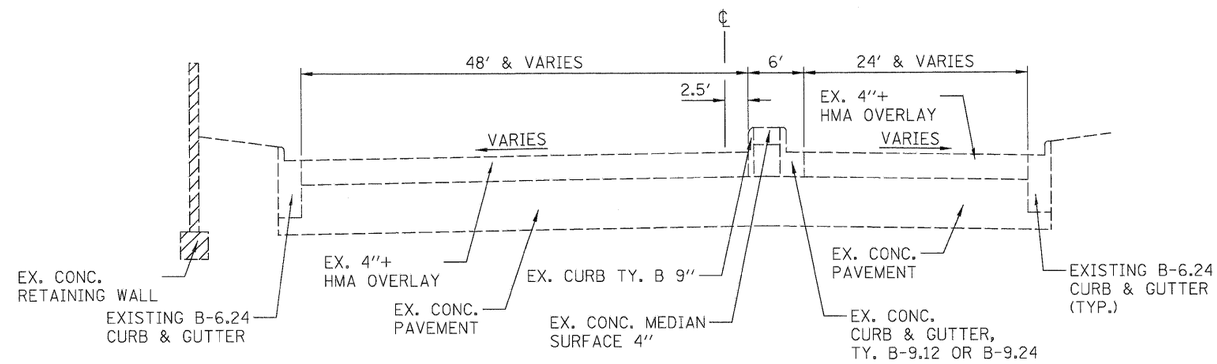

EXISTING TYPICAL SECTION

STA. 1381+00 TO STA. 1383+77

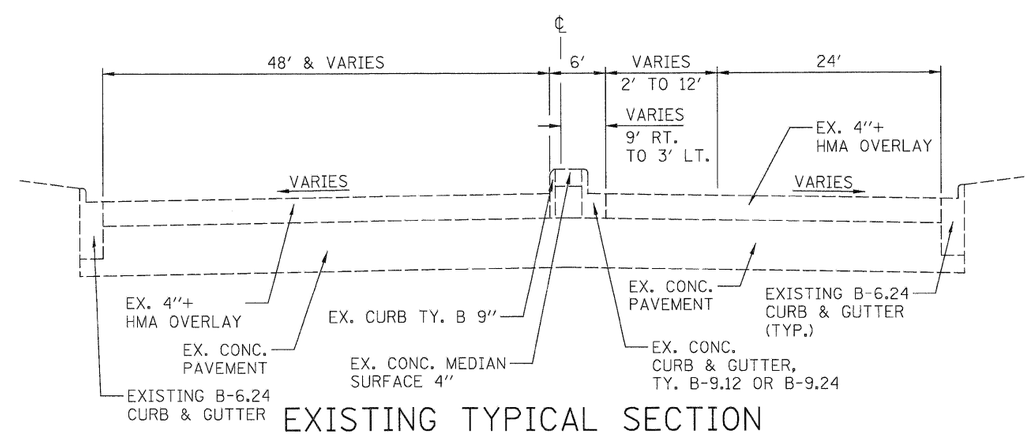

EXISTING TYPICAL SECTION

STA. 1383+77 TO STA. 1385+25

FILE NAME = ...\oadd\D876D96-sht-typical.dgn	USER NAME = SJS	DESIGNED -	REVISED -	STATE OF ILLINOIS DEPARTMENT OF TRANSPORTATION	EXISTING TYPICAL SECTIONS	F.A.U. RTE.	SECTION	COUNTY	TOTAL SHEETS / SHEET NO.
Johnson, Depp & Quisenberry CONSULTING ENGINEERS Springfield, Illinois		DRAWN -	REVISED -			9166	34-1RS-3	ST. CLAIR	87 / 11
	PLOT SCALE = 8.0000 ′ / IN.	CHECKED -	REVISED -					CONTRACT NO. 76D96	
	PLOT DATE = 12/15/2010 09:35:13	DATE -	REVISED -		SCALE: SHEET NO. OF SHEETS STA. 975+45.58 TO STA. 990+00.00		ILLINOIS FED. AID PROJECT		

THE CONTRACTOR SHOULD BE AWARE THAT THE INTENT OF PROPOSED HMA SURFACE REMOVAL IS TO NOT MILL UNDERLYING EXISTING CONCRETE PAVEMENT.

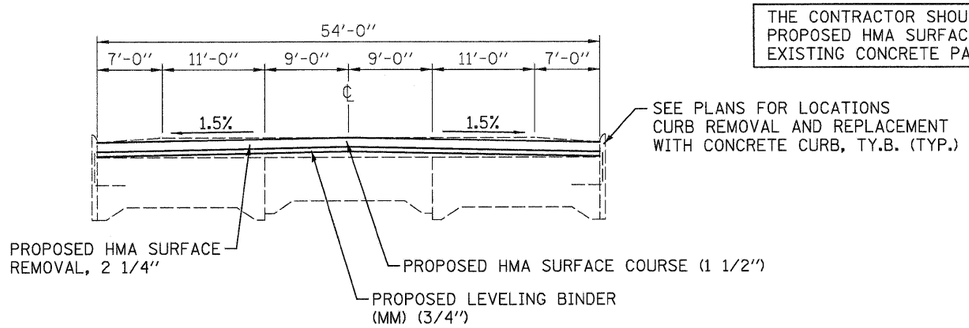

PROPOSED TYPICAL SECTION

STA. 980+00 TO STA. 1000+00

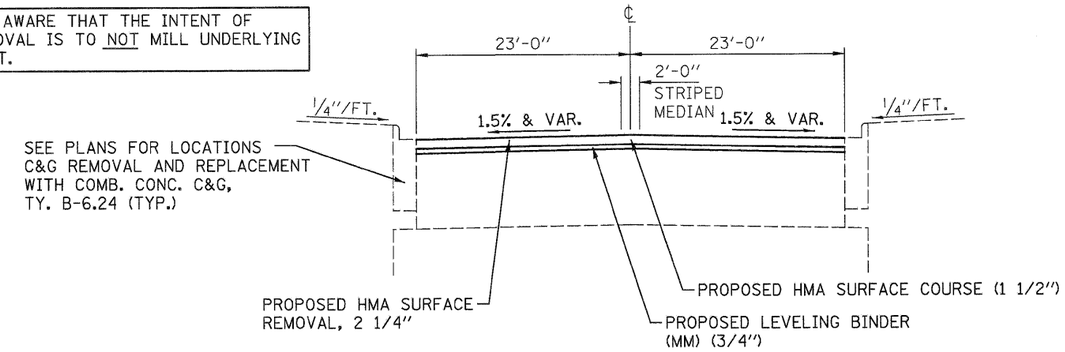

PROPOSED TYPICAL SECTION

STA. 1014+00 TO STA. 1033+00

RESURFACING AND MILLING OMISSION (METRO LINK CROSSING)
(W.B.) LT. STA. 1031+45 TO LT. STA. 1032+15
(E.B.) RT. STA. 1031+70 TO LT. STA. 1032+45

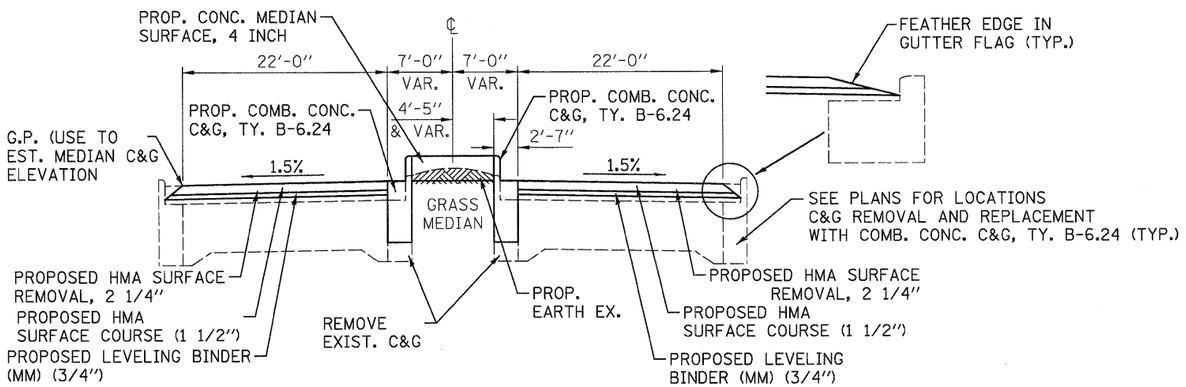

PROPOSED TYPICAL SECTION

STA. 1000+00 TO STA. 1007+10 (W.B.)
STA. 1000+00 TO STA. 1007+40 (E.B.)
STA. 1010+25 TO STA. 1014+00 (W.B.)
STA. 1009+50 TO STA. 1014+00 (E.B.)

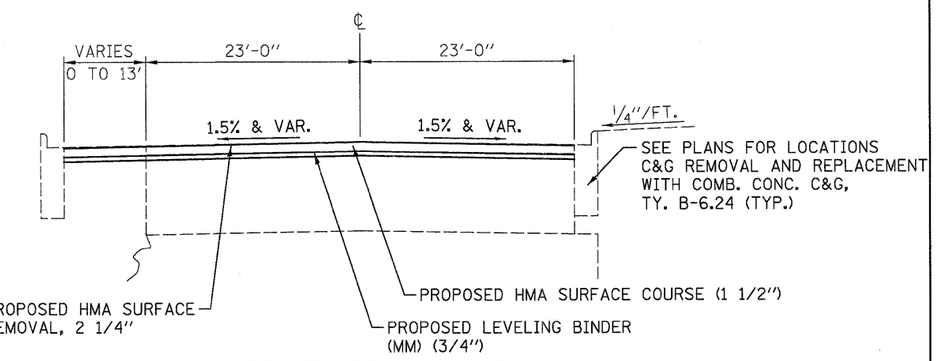

PROPOSED TYPICAL SECTION

STA. 1033+00 TO STA. 1041+85

TRANSITION PAVEMENT CROSS-SLOPE

STA. 1005+00 TO STA. 1006+00 (1.5% TO 2.0%)
STA. 1006+00 TO STA. 1010+00 (2.0%)
STA. 1010+00 TO STA. 1011+00 (2.0% TO 1.5%)

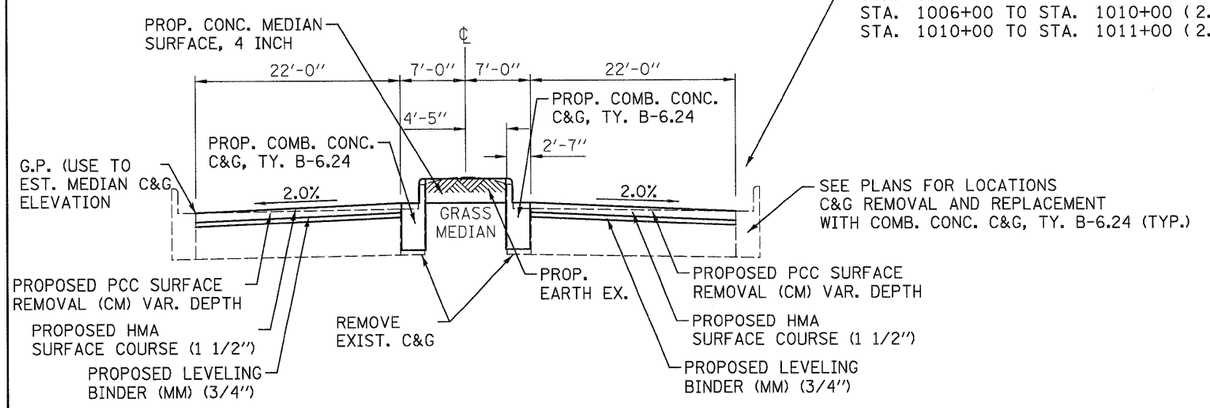

PROPOSED TYPICAL SECTION

STA. 1007+10 TO STA. 1010+25 (W.B.)
STA. 1007+40 TO STA. 1009+50 (E.B.)

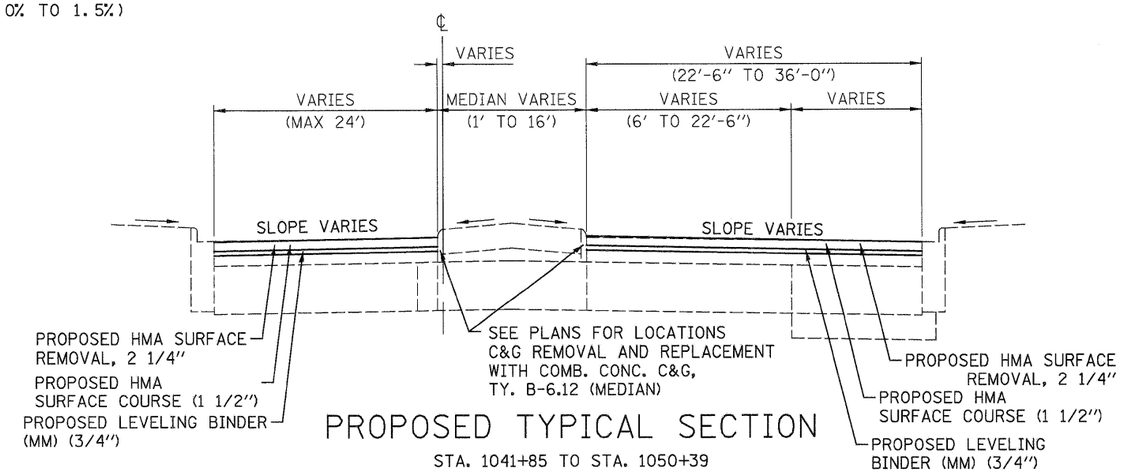

PROPOSED TYPICAL SECTION

STA. 1041+85 TO STA. 1050+39

FILE NAME = ...\cadd\D876D96-sht-typical.dgn	USER NAME = SJS	DESIGNED -	REVISED -	STATE OF ILLINOIS DEPARTMENT OF TRANSPORTATION	PROPOSED TYPICAL SECTIONS	F.A.U. RTE.	SECTION	COUNTY	TOTAL SHEETS	SHEET NO.
Johnson, Depp & Quisenberry CONSULTING ENGINEERS Springfield, Illinois		DRAWN -	REVISED -			9166	34-1RS-3	ST. CLAIR	87	12
	PLOT SCALE = 8.0000 ' / IN.	CHECKED -	REVISED -					CONTRACT NO. 76D96		
	PLOT DATE = 12/15/2010 09:35:13	DATE -	REVISED -		SCALE: SHEET NO. OF SHEETS STA. 975+45.58 TO STA. 990+00.00		ILLINOIS FED. AID PROJECT			

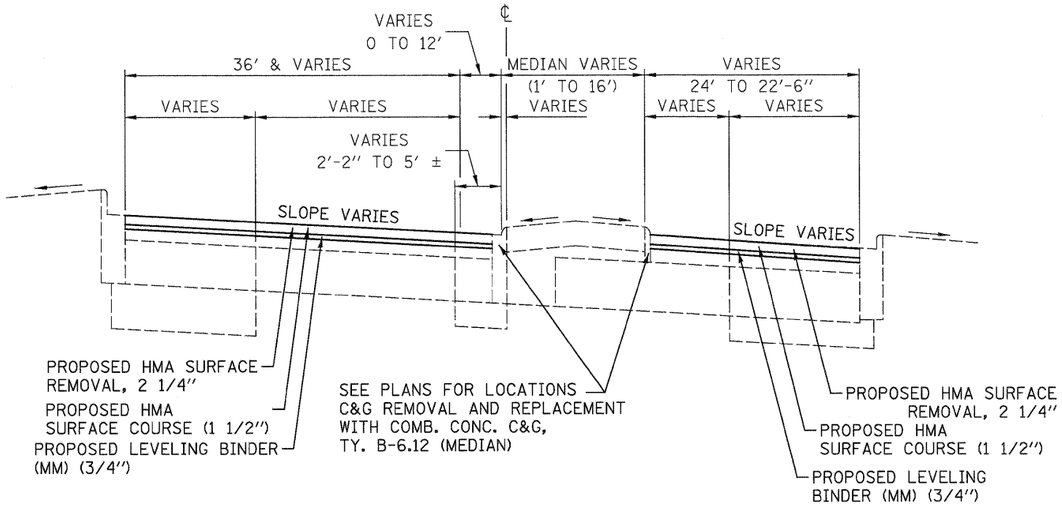

PROPOSED TYPICAL SECTION

STA. 1050+39 TO STA. 1058+00

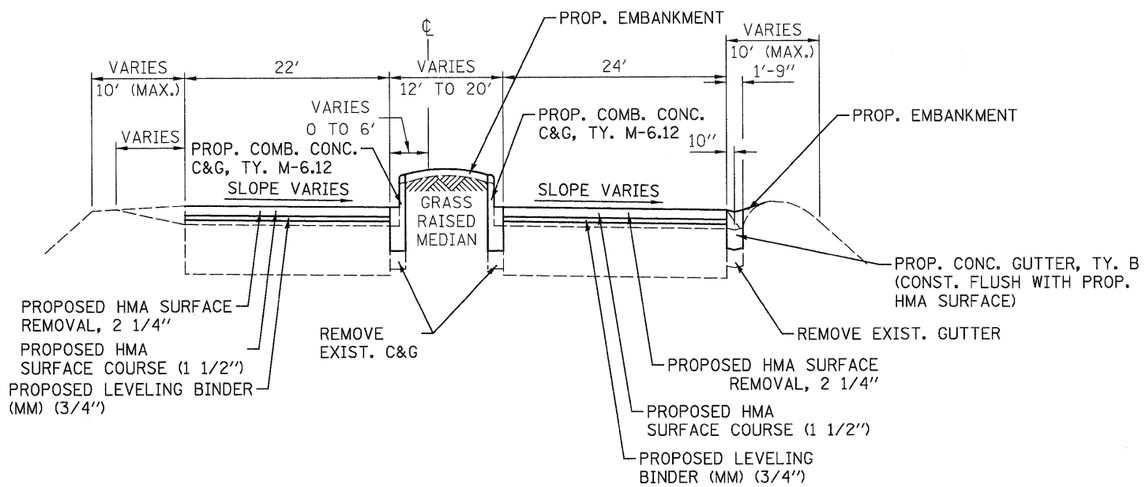

PROPOSED TYPICAL SECTION

STA. 1058+00 TO STA. 1068+00

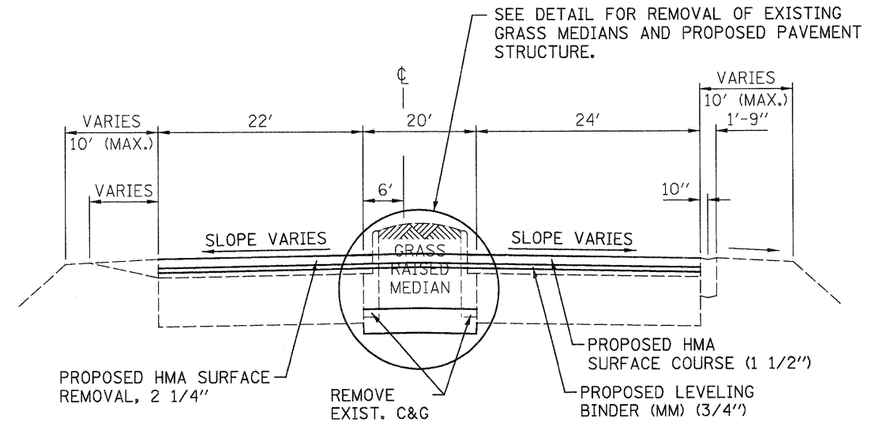

PROPOSED TYPICAL SECTION

STA. 1058+00 TO STA. 1076+70

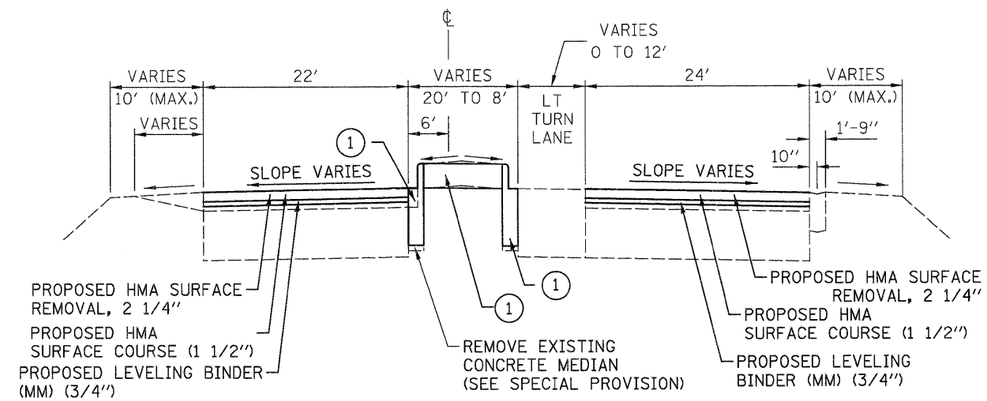

(1) STA. 1076+70 TO STA. 1078+95
CONST. COMB. CONCRETE C&G,
TY. M-6.12 AND CONC. MED. SURF., 4 INCH
STA. 1078+95 TO STA. 1080+90
CONST. CONCRETE MEDIAN, TY. SM-6.12

PROPOSED TYPICAL SECTION

STA. 1076+70 TO STA. 1081+00

FILE NAME = ...\oadd\D876D96-sht-typical.dgn	USER NAME = SJS	DESIGNED -	REVISED -	STATE OF ILLINOIS DEPARTMENT OF TRANSPORTATION	PROPOSED TYPICAL SECTIONS	F.A.U. RTE.	SECTION	COUNTY	TOTAL SHEETS / SHEET NO.
Johnson, Depp & Quisenberry CONSULTING ENGINEERS Springfield, Illinois		DRAWN -	REVISED -			9166	34-1RS-3	ST. CLAIR	87 / 13
	PLOT SCALE = 8.0000 ' / IN.	CHECKED -	REVISED -					CONTRACT NO. 76D96	
	PLOT DATE = 12/15/2010 09:35:14	DATE -	REVISED -		SCALE: SHEET NO. OF SHEETS STA. 975+45.58 TO STA. 990+00.00		ILLINOIS FED. AID PROJECT		

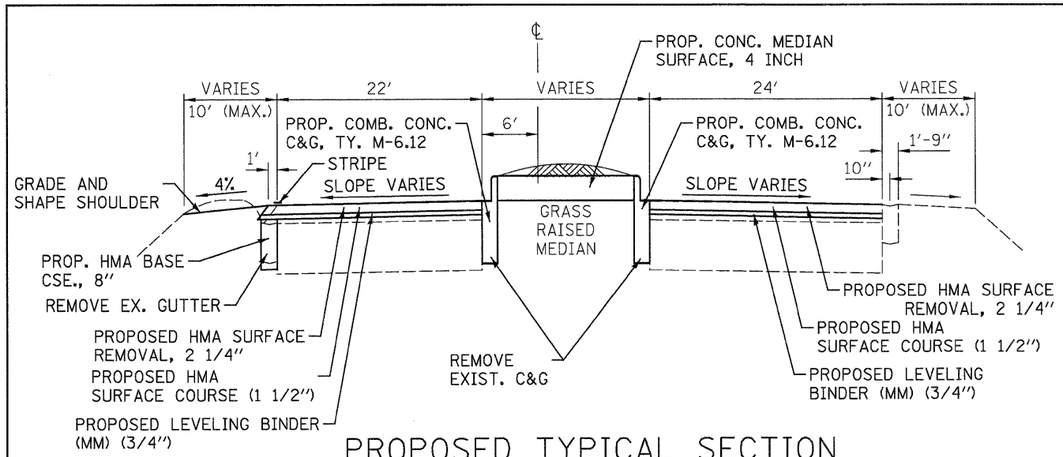

PROPOSED TYPICAL SECTION

STA. 1081+00 TO STA. 1084+00

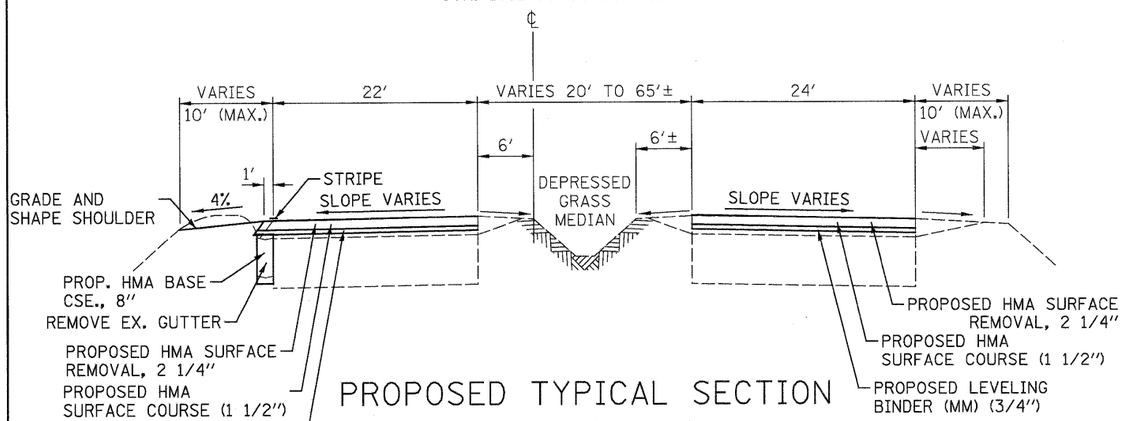

PROPOSED TYPICAL SECTION

STA. 1084+00 TO STA. 1109+58

RESURFACING AND MILLING OMISSION (HARDING DITCH)

STA. 1102+72 TO STA. 1103+24

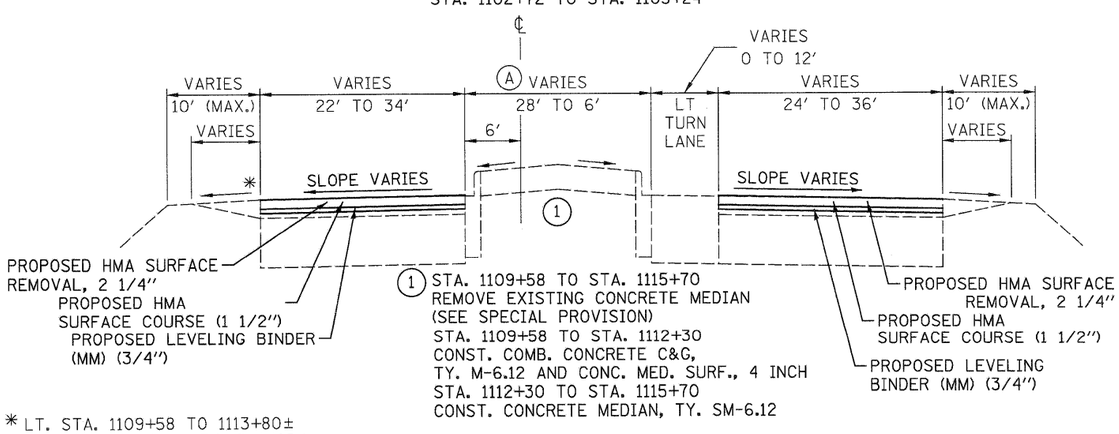

* LT. STA. 1109+58 TO 1113+80±
EX. CONC. GUTTER, TY. B (MOD.)
(MOSTLY FILLED WITH HMA)
(SEE PREVIOUS TYP.
FOR GUTTER REMOVAL
DETAILS.)

PROPOSED TYPICAL SECTION

STA. 1109+58 TO STA. 1122+70
STA. 1138+15 TO STA. 1151+25 (A) 18' MEDIAN

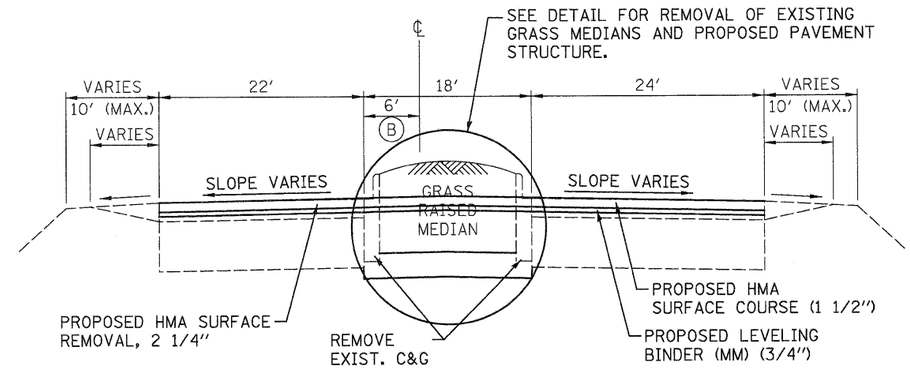

PROPOSED TYPICAL SECTION

STA. 1122+70 TO STA. 1138+15
STA. 1159+00 TO STA. 1171+35 (B) VARIES 6' TO 10'±

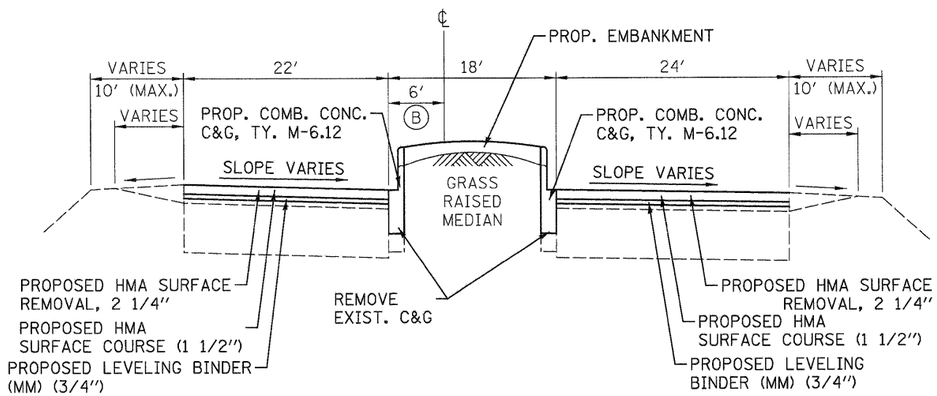

PROPOSED TYPICAL SECTION

STA. 1151+25 TO STA. 1159+00 (B) VARIES 6' TO 10'±

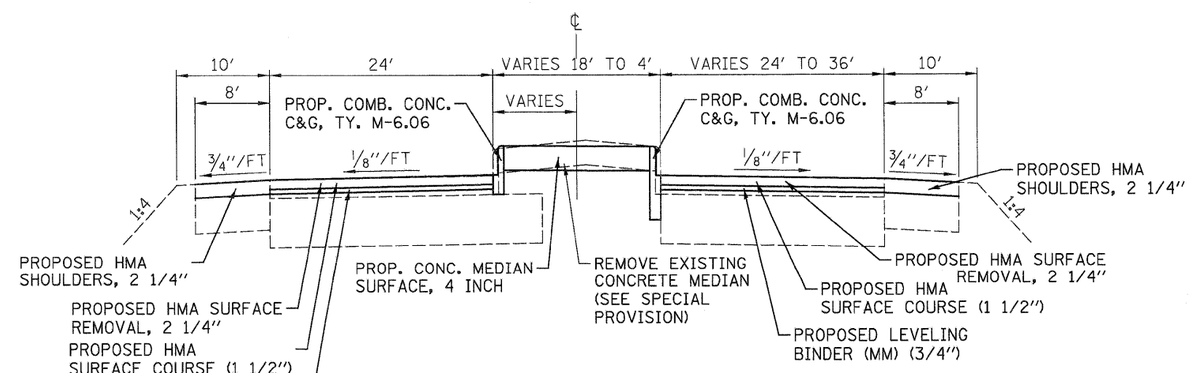

PROPOSED TYPICAL SECTION

STA. 1171+35 TO STA. 1173+62

FILE NAME = ...\oadd\D876D96-sht-typical.dgn	USER NAME = SJS	DESIGNED -	REVISED -	STATE OF ILLINOIS DEPARTMENT OF TRANSPORTATION	PROPOSED TYPICAL SECTIONS	F.A.U. RTE. 9166	SECTION 34-1RS-3	COUNTY ST. CLAIR	TOTAL SHEETS 87 / SHEET NO. 14
Johnson, Depp & Quisenberry CONSULTING ENGINEERS Springfield, Illinois		DRAWN -	REVISED -					CONTRACT NO. 76D96	
	PLOT SCALE = 8.0000 ' / IN.	CHECKED -	REVISED -						
	PLOT DATE = 12/15/2010 09:35:15	DATE -	REVISED -		SCALE: SHEET NO. OF SHEETS STA. 975+45.58 TO STA. 990+00.00		ILLINOIS FED. AID PROJECT		

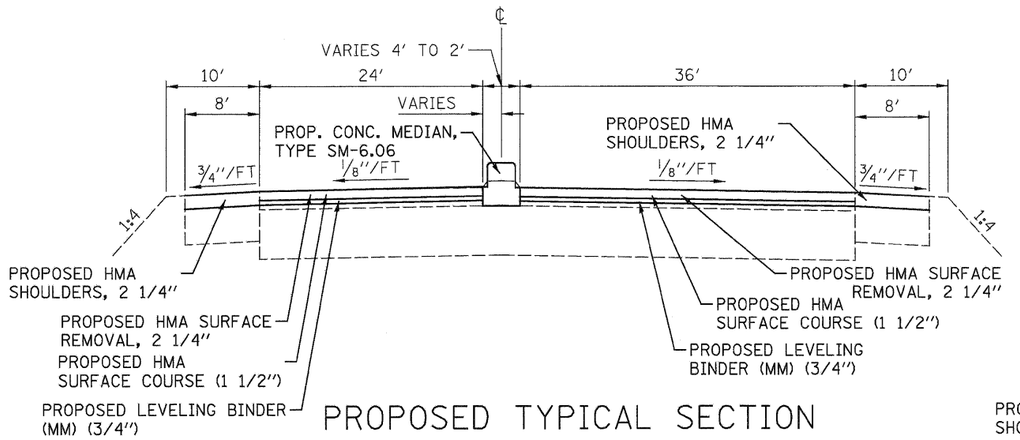

PROPOSED TYPICAL SECTION

STA. 1173+62 TO STA. 1177+00

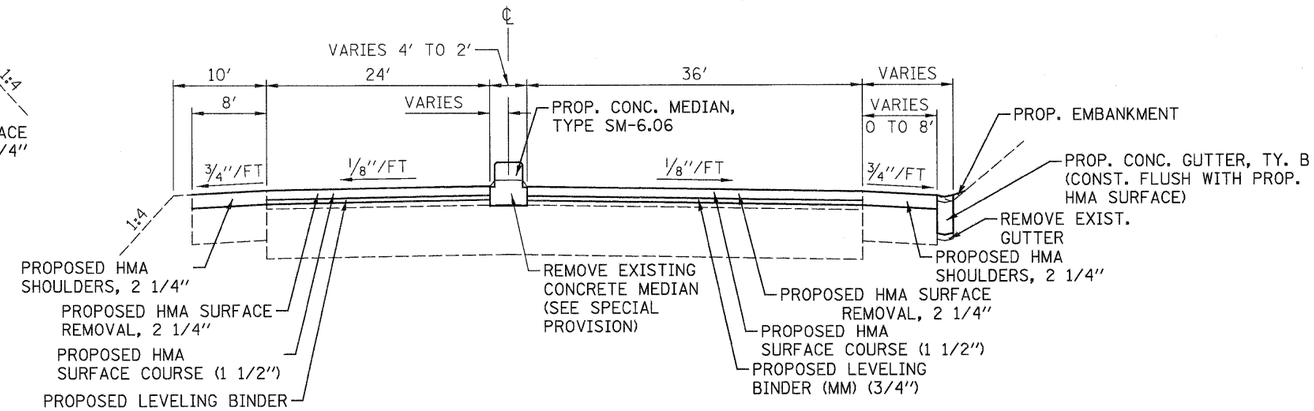

PROPOSED TYPICAL SECTION

STA. 1182+50 TO STA. 1185+40

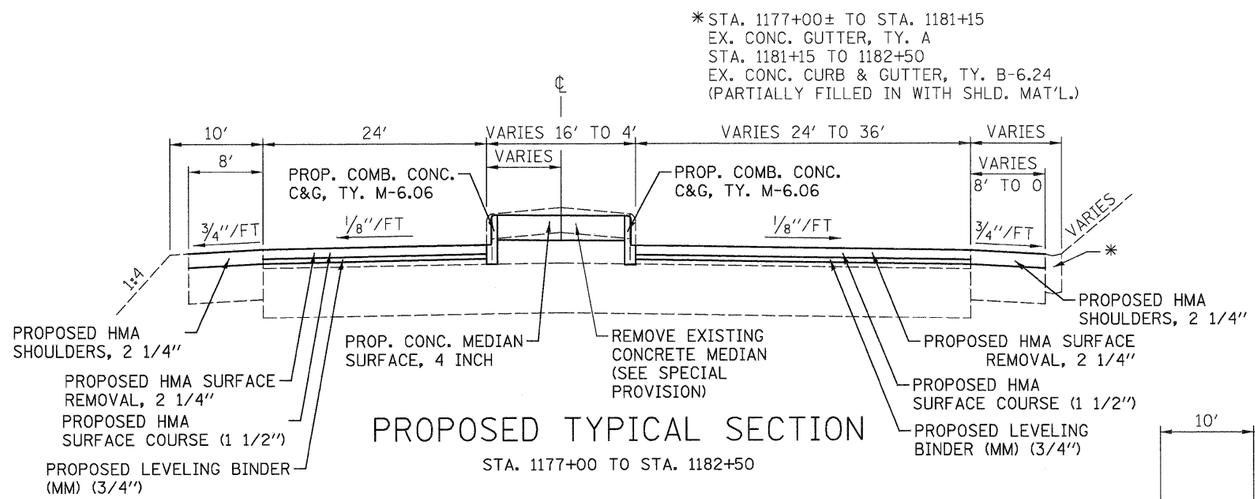

PROPOSED TYPICAL SECTION

STA. 1177+00 TO STA. 1182+50

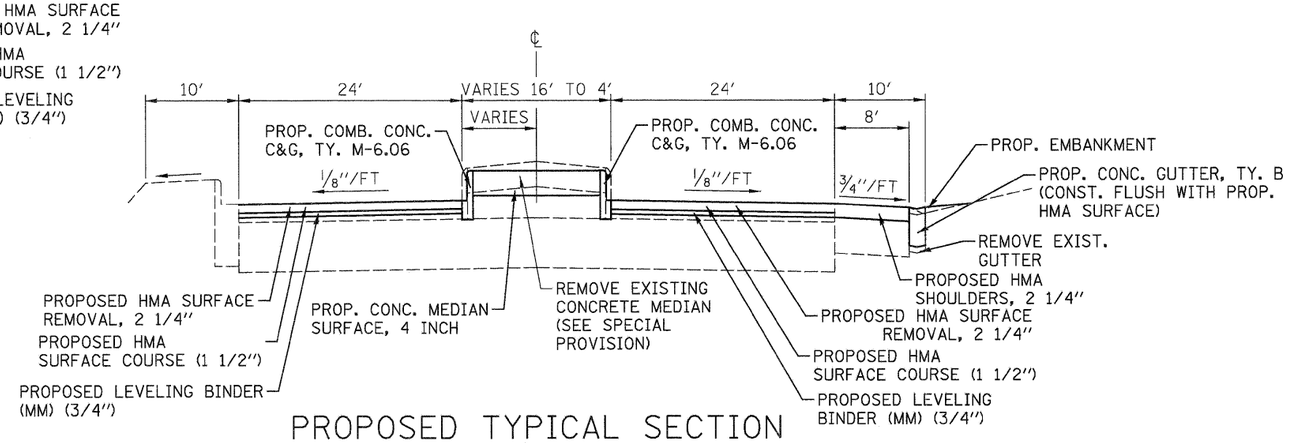

PROPOSED TYPICAL SECTION

STA. 1185+40 TO STA. 1189+65

FILE NAME = ...\cadd\D876D96-sht-typical.dgn	USER NAME = SJS	DESIGNED -	REVISED -	STATE OF ILLINOIS DEPARTMENT OF TRANSPORTATION	PROPOSED TYPICAL SECTIONS	F.A.U. RTE.	SECTION	COUNTY	TOTAL SHEETS	SHEET NO.
Johnson, Depp & Quisenberry CONSULTING ENGINEERS Springfield, Illinois		DRAWN -	REVISED -			9166	34-1RS-3	ST. CLAIR	87	15
	PLOT SCALE = 8.0000 ' / IN.	CHECKED -	REVISED -					CONTRACT NO. 76D96		
	PLOT DATE = 12/15/2010 09:35:15	DATE -	REVISED -		SCALE: SHEET NO. OF SHEETS STA. 975+45.58 TO STA. 990+00.00		ILLINOIS FED. AID PROJECT			

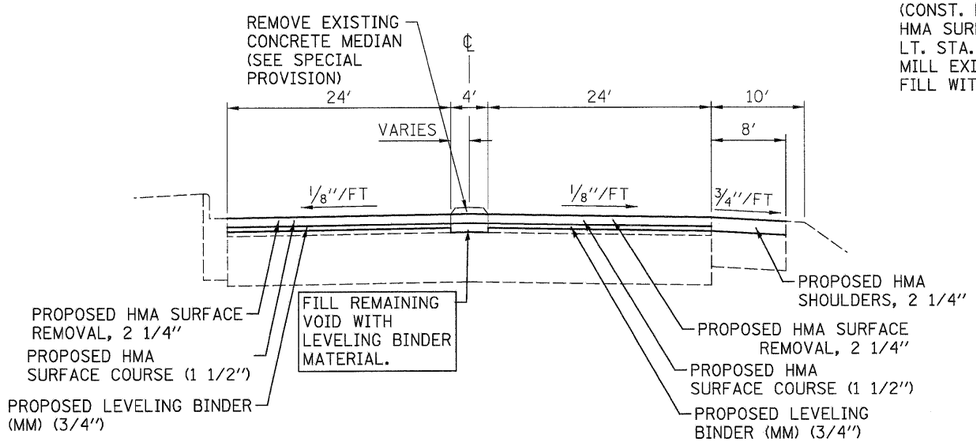

PROPOSED TYPICAL SECTION

STA. 1189+65 TO STA. 1191+60

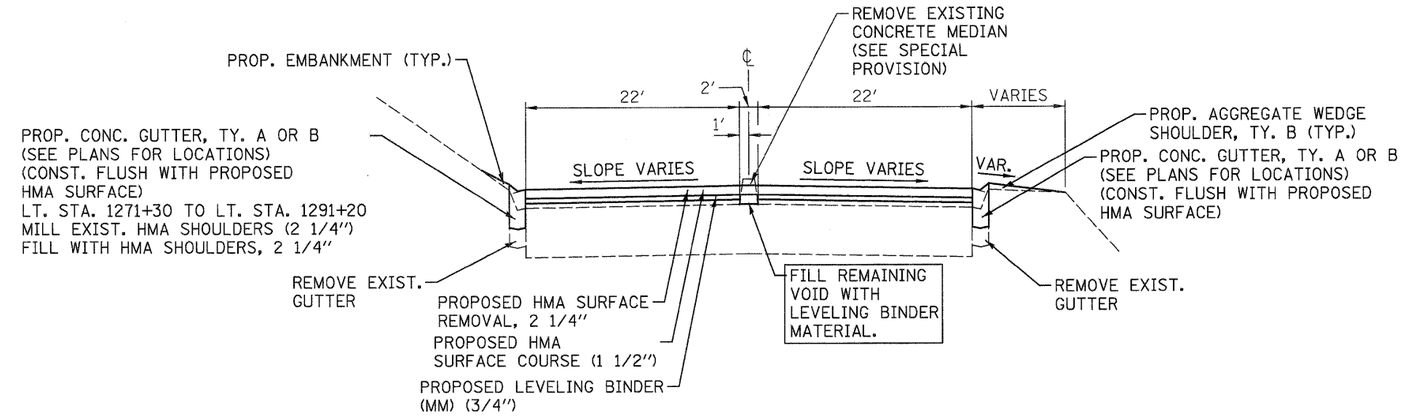

PROPOSED TYPICAL SECTION

STA. 1217+00 TO STA. 1291+20
NOTE: NO EXISTING PLANS (BASED ON FIELD OBSERVATIONS)

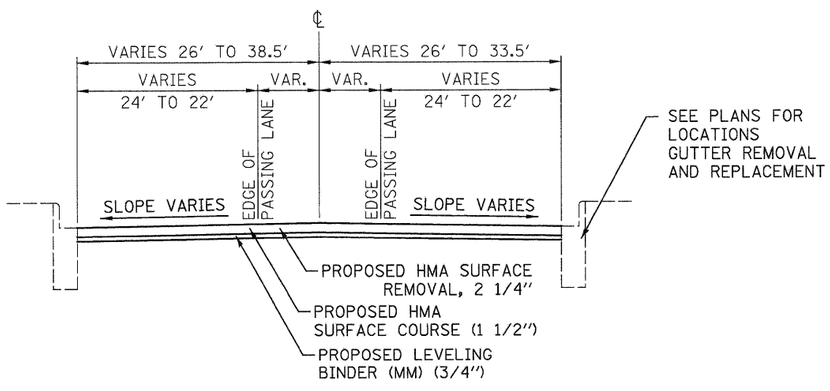

PROPOSED TYPICAL SECTION

STA. 1191+60 TO STA. 1217+00
NOTE: NO EXISTING PLANS

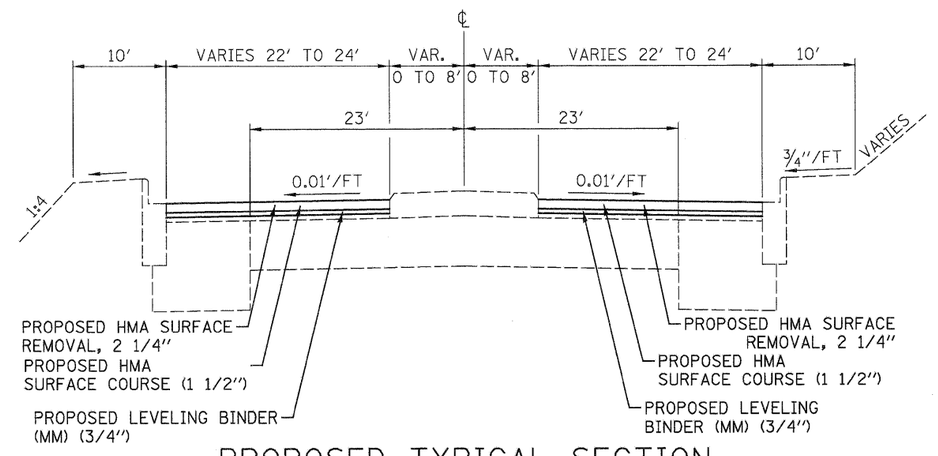

PROPOSED TYPICAL SECTION

STA. 1291+20 TO STA. 1295+50

FILE NAME = ...\cadd\D876D96-sht-typical.dgn	USER NAME = SJS	DESIGNED -	REVISED -	STATE OF ILLINOIS DEPARTMENT OF TRANSPORTATION	PROPOSED TYPICAL SECTIONS			F.A.U. RTE.	SECTION	COUNTY	TOTAL SHEETS / SHEET NO.
Johnson, Depp & Quisenberry CONSULTING ENGINEERS Springfield, Illinois		DRAWN -	REVISED -					9166	34-1RS-3	ST. CLAIR	87 / 16
	PLOT SCALE = 8.0000 ′ / IN.	CHECKED -	REVISED -							CONTRACT NO. 76D96	
	PLOT DATE = 12/15/2010 09:35:16	DATE -	REVISED -		SCALE:	SHEET NO. OF SHEETS	STA. 975+45.58 TO STA. 990+00.00		ILLINOIS FED. AID PROJECT		

* ADDITIONAL 12′ WHERE THERE ARE RT.-TURN/BUS STOP LANES.
(SEE PLANS FOR LOCATIONS)

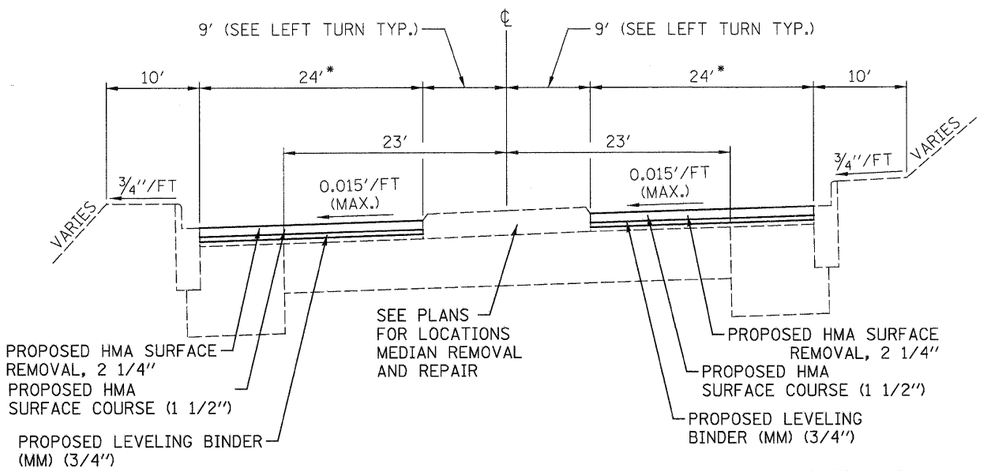

PROPOSED TYPICAL SUPERELEVATED SECTION

STA. 1295+50 TO STA. 1321+00
(STA. 1295+50 TO STA. 1306+00 (FULL SUPER, LT. EDGE HIGH)
(STA. 1309+00 TO STA. 1321+00 (FULL SUPER, RT. EDGE HIGH)

* ADDITIONAL 12′ WHERE THERE ARE RT.-TURN/BUS STOP LANES.
(SEE PLANS FOR LOCATIONS)

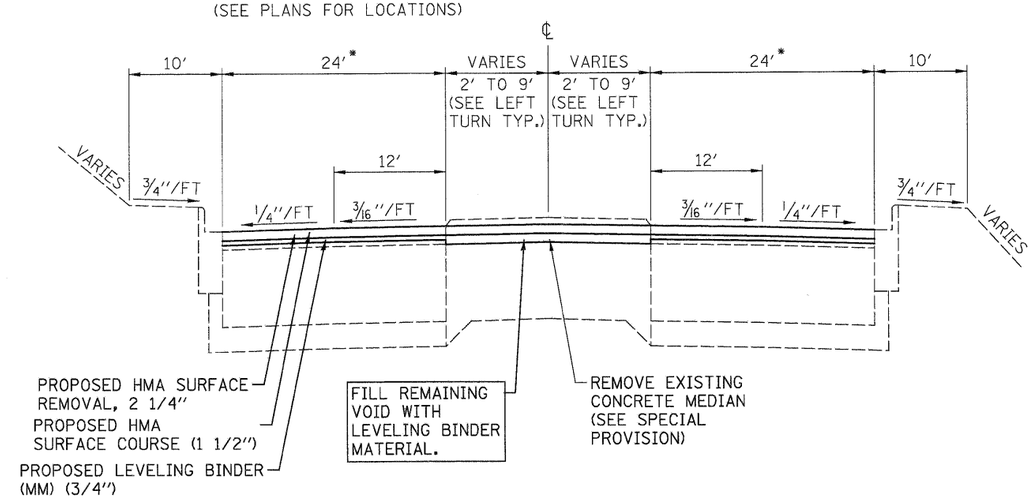

PROPOSED TYPICAL SECTION

STA. 1321+00 TO STA. 1374+00

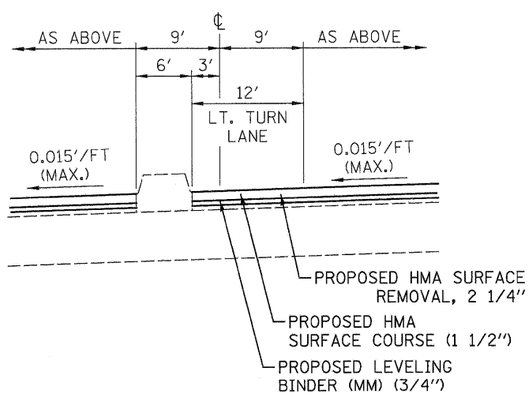

PROPOSED TYPICAL SUPERELEVATED SECTION

WITH LEFT TURN
(SEE PLANS FOR LOCATIONS)

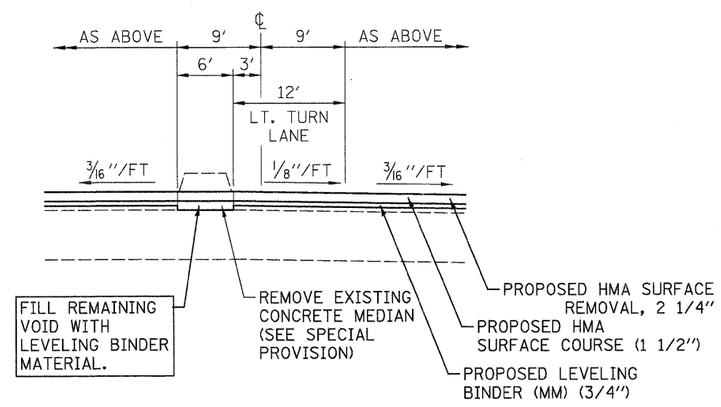

PROPOSED TYPICAL SECTION WITH LEFT LANE

(SEE PLANS FOR LOCATIONS)

FILE NAME = ...\oadd\D876D96-sht-typical.dgn	USER NAME = SJS	DESIGNED -	REVISED -	STATE OF ILLINOIS DEPARTMENT OF TRANSPORTATION	PROPOSED TYPICAL SECTIONS	F.A.U. RTE.	SECTION	COUNTY	TOTAL SHEETS	SHEET NO.
		DRAWN -	REVISED -			9166	34-1RS-3	ST. CLAIR	87	17
Johnson, Depp & Quisenberry CONSULTING ENGINEERS Springfield, Illinois	PLOT SCALE = 8.3000 ′/ IN.	CHECKED -	REVISED -					CONTRACT NO. 76D96		
	PLOT DATE = 12/15/2010 09:35:16	DATE -	REVISED -		SCALE: SHEET NO. OF SHEETS STA. 975+45.58 TO STA. 990+00.00		ILLINOIS	FED. AID PROJECT		

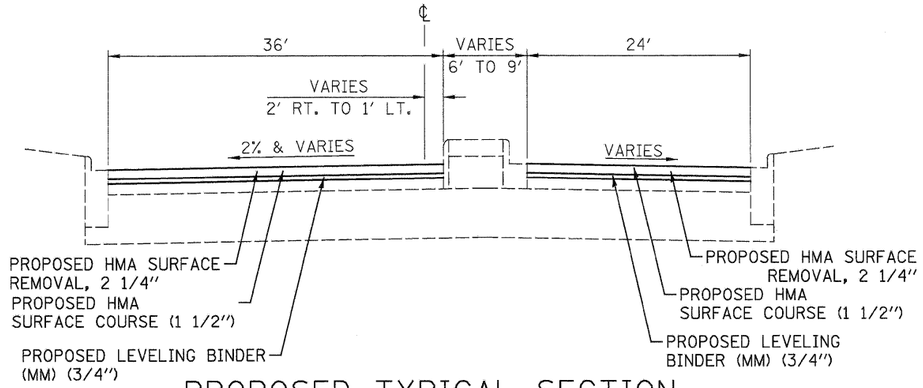

PROPOSED TYPICAL SECTION

STA. 1374+00 TO STA. 1375+44

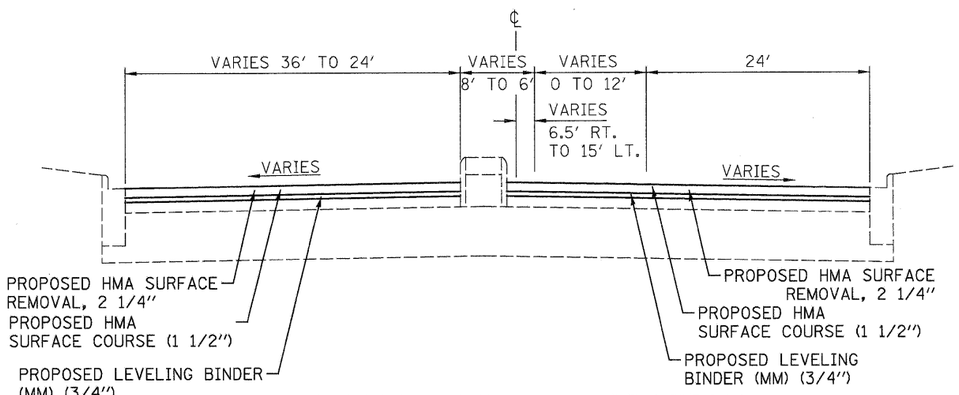

PROPOSED TYPICAL SECTION

STA. 1375+44 TO STA. 1376+88

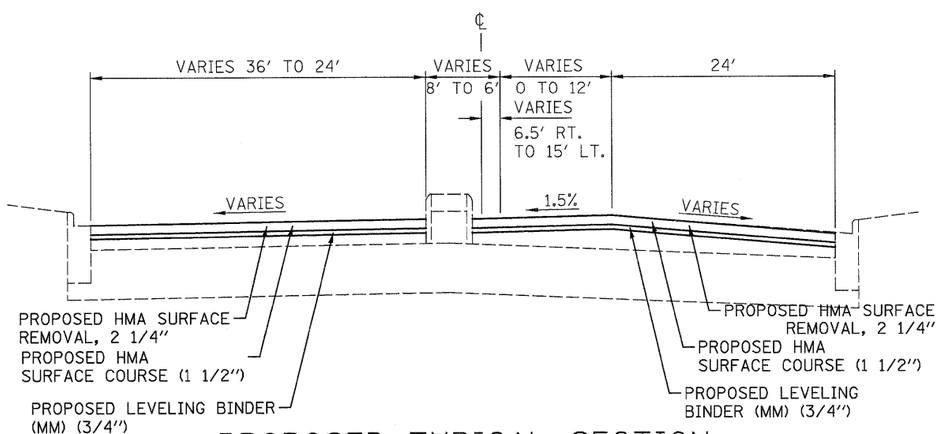

PROPOSED TYPICAL SECTION

STA. 1376+88 TO STA. 1378+32

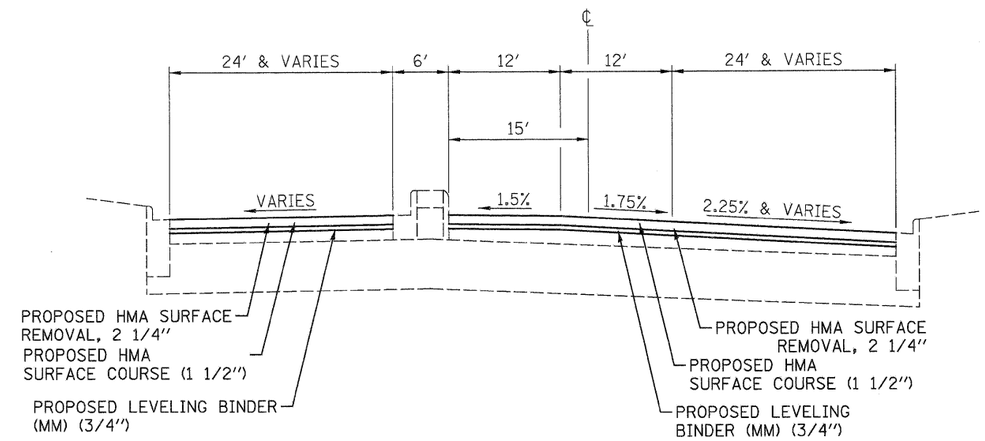

PROPOSED TYPICAL SECTION

STA. 1378+32 TO STA. 1381+00

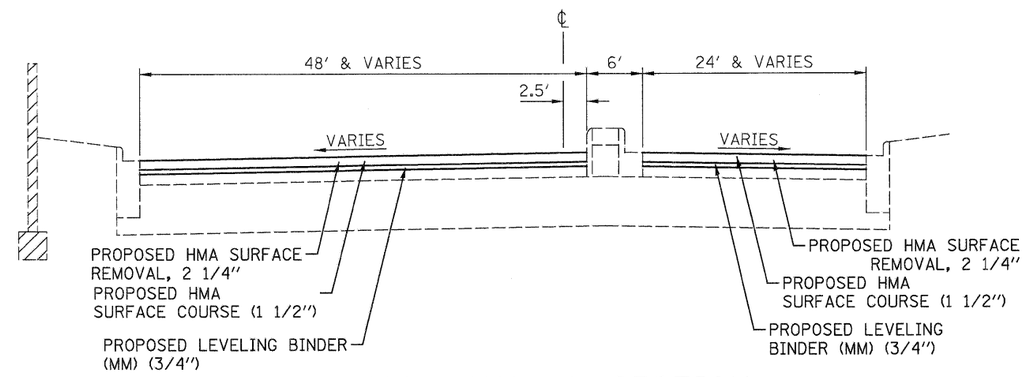

PROPOSED TYPICAL SECTION

STA. 1381+00 TO STA. 1383+77

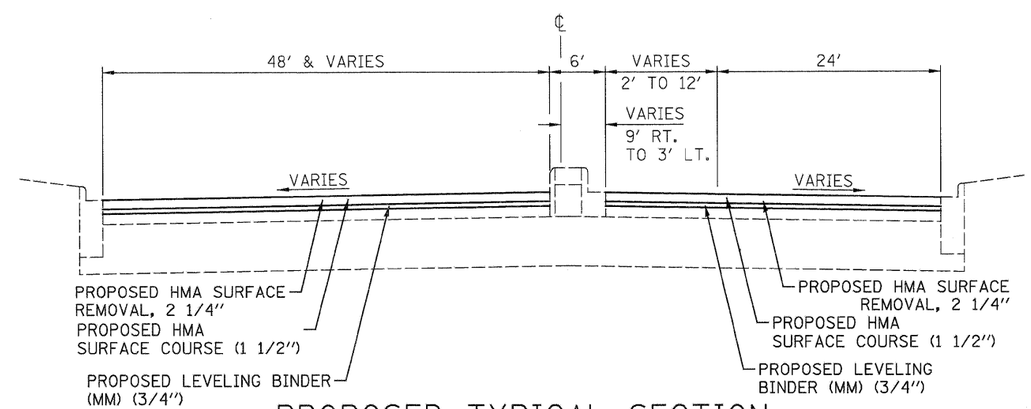

PROPOSED TYPICAL SECTION

STA. 1383+77 TO STA. 1385+25

FILE NAME = ...\cadd\D876D96-sht-typical.dgn	USER NAME = SJS	DESIGNED -	REVISED -	STATE OF ILLINOIS DEPARTMENT OF TRANSPORTATION	PROPOSED TYPICAL SECTIONS	F.A.U. RTE.	SECTION	COUNTY	TOTAL SHEETS / SHEET NO.
Johnson, Depp & Quisenberry CONSULTING ENGINEERS Springfield, Illinois		DRAWN -	REVISED -			9166	34-1RS-3	ST. CLAIR	87 / 18
	PLOT SCALE = 8.0000 ′ / IN.	CHECKED -	REVISED -					CONTRACT NO. 76D96	
	PLOT DATE = 12/15/2010 09:35:17	DATE -	REVISED -		SCALE: SHEET NO. OF SHEETS STA. 975+45.58 TO STA. 990+00.00		ILLINOIS FED. AID PROJECT		

TREE REMOVAL (OVER 15 UNITS DIAMETER)

LOCATION	UNIT
RT. STA. 997+92	36
TOTAL =	36

EARTH EXCAVATION

LOCATION (GRASS MEDIANS)	CU. YD.
STA. 1068+00 TO STA. 1076+70	700.8
STA. 1122+70 TO STA. 1125+00	185.3
STA. 1125+00 TO STA. 1138+15	1,059.3
STA. 1159+00 TO STA. 1170+00	886.1
STA. 1170+00 TO STA. 1171+35	108.8
TOTAL =	2,940

SUBBASE GRANULAR MATERIAL, TYPE B 4"

LOCATION	SQ. YD.
IL 111 (N KINGSHIGHWAY):	
NE QUADRANT (EXISTING ISLAND)	30
NW QUADRANT (EXISTING ISLAND)	14
SE QUADRANT (EXISTING ISLAND)	16
SW QUADRANT (EXISTING ISLAND)	8
ST. CLAIR AVE:	
STA. 1068+00 TO STA. 1076+55	1,572
RT. STA. 1098+90 (EXISTING ISLAND)	21
STA. 1122+70 TO STA. 1138+20	3,000
STA. 1159+00 TO STA. 1171+35	2,470
TOTAL =	7,131

HOT-MIX ASPHALT BASE COURSE, 8"

LOCATION	SQ. YD.
LT. STA. 1081+85 TO LT. STA. 1102+60	403
TOTAL =	403

HOT-MIX ASPHALT BASE COURSE, 10"

LOCATION	SQ. YD.
IL 111 (N KINGSHIGHWAY):	
NE QUADRANT (EXISTING ISLAND)	30
NW QUADRANT (EXISTING ISLAND)	14
SE QUADRANT (EXISTING ISLAND)	16
SW QUADRANT (EXISTING ISLAND)	8
ST. CLAIR AVE:	
STA. 1068+00 TO STA. 1076+55	1,572
RT. STA. 1098+90 (EXISTING ISLAND)	21
STA. 1122+70 TO STA. 1138+20	3,000
STA. 1159+00 TO STA. 1171+35	2,470
TOTAL =	7,131

BITUMINOUS MATERIALS (PRIME COAT)
AGGREGATE (PRIME COAT)
LEVELING BINDER (MACHINE METHOD), N90
POLYMERIZED HOT-MIX ASPHALT SURFACE COURSE, MIX "D", N90
HOT-MIX ASPHALT SURFACE REMOVAL, 2 1/4"

LOCATION	BIT MAT'L PRIME COAT (TON)	AGG (PC) (TON)	LEVELING BINDER (TON)	POLY HMA SURFACE (TON)	HMA REMOVAL (SQ. YD.)
STA. 980+00 TO STA. 990+00	2	9	252	504	5,998
STA. 990+00 TO STA. 1005+00	3	13	359	719	8,559
STA. 1005+00 TO STA. 1020+00	2	9	260	520	6,186
STA. 1020+00 TO STA. 1035+00	2	12	327	655	7,797
STA. 1035+00 TO STA. 1050+00	3	14	393	787	9,350
STA. 1050+00 TO STA. 1065+00	3	15	416	831	9,843
STA. 1065+00 TO STA. 1080+00	3	14	399	798	7,933
STA. 1080+00 TO STA. 1095+00	2	12	333	665	8,586
STA. 1095+00 TO STA. 1110+00	2	11	308	617	7,500
STA. 1110+00 TO STA. 1125+00	3	14	393	786	8,903
STA. 1125+00 TO STA. 1140+00	3	16	438	876	7,887
STA. 1140+00 TO STA. 1155+00	3	13	358	716	8,518
STA. 1155+00 TO STA. 1170+00	3	15	414	829	7,669
STA. 1170+00 TO STA. 1185+00	3	14	398	796	11,268
STA. 1185+00 TO STA. 1200+00	3	15	417	833	10,521
STA. 1200+00 TO STA. 1215+00	3	16	448	896	10,671
STA. 1215+00 TO STA. 1230+00	2	12	325	651	7,511
STA. 1230+00 TO STA. 1245+00	2	12	322	644	7,388
STA. 1245+00 TO STA. 1260+00	2	12	322	644	7,369
STA. 1260+00 TO STA. 1275+00	2	12	322	644	7,711
STA. 1275+00 TO STA. 1290+00	2	12	322	644	8,600
STA. 1290+00 TO STA. 1305+00	3	14	383	765	9,190
STA. 1305+00 TO STA. 1320+00	3	15	423	846	10,061
STA. 1320+00 TO STA. 1335+00	3	16	453	907	8,969
STA. 1335+00 TO STA. 1350+00	3	15	427	854	9,084
STA. 1350+00 TO STA. 1365+00	3	16	442	885	9,123
STA. 1365+00 TO STA. 1380+00	4	17	479	957	11,038
STA. 1380+00 TO STA. 1385+25	1	6	180	360	4,283
TOTALS =	73	371	10,313	20,629	237,516

INCIDENTAL HOT-MIX ASPHALT SURFACING

LOCATION (MEDIAN CROSSOVER)	TON
STA. 1083+75	17
STA. 1085+50	20
STA. 1087+65	15
STA. 1090+90	32
STA. 1098+90	17
STA. 1109+40	6
TOTAL =	107

PROTECTIVE COAT

LOCATION	SQ. YD.
CLASS SI CONCRETE (OULTET)	13.0
	10.3
	9.1
CONCRETE CURB, TYPE B	27.1
CONCRETE GUTTER, TYPE A	1384.7
CONCRETE GUTTER, TYPE B	1656.7
CC&G TYPE B-6.12	30.9
CC&G TYPE B-6.24	1835.0
CC&G TYPE M-6.06	349.2
CC&G TYPE M-6.12	1058.4
CONCRETE MEDIAN SURFACE, 4 INCH	3888.2
CONCRETE MEDIAN, TYPE SM-6.06	236.9
CONCRETE MEDIAN, TYPE SM-6.12	510.8
CORRUGATED MEDIAN	39.4
TOTAL =	11,050

(APPLIED TO ALL NEW EXPOSED CONCRETE SURFACES)

TEMPORARY RAMP

LOCATION	SQ. YD.
STA. 980+00 (BEGINNING OF PROJECT)	44
LT. STA. 1031+40 (RAILROAD OMISSION)	19
RT. STA. 1031+70 (RAILROAD OMISSION)	19
LT. STA. 1032+15 (RAILROAD OMISSION)	19
RT. STA. 1032+45 (RAILROAD OMISSION)	19
LT. STA. 1050+40 (IL 111)	104
RT. STA. 1050+40 (IL 111)	103
STA. 1102+72 (BRIDGE OMISSION)	38
STA. 1103+24 (BRIDGE OMISSION)	38
LT. STA. 1177+00 (RAMPS 3&4 - IL 157)	198
LT. STA. 1185+40 (RAMPS 1&2- IL 157)	191
RT. STA. 1206+25 (IL 161)	178
LT. STA. 1381+00 (IL 159)	228
RT. STA. 1381+00 (IL 159)	230
STA. 1385+25 (END OF PROJECT)	60
TOTAL =	1,488

CURB REMOVAL

LOCATION		FOOT
STA. 980+06 TO STA. 980+21	RT	15
STA. 980+79 TO STA. 980+97	LT	18
STA. 983+65 TO STA. 984+25	RT	60
STA. 984+28 TO STA. 984+33	LT	5
STA. 985+34 TO STA. 985+38	RT	4
STA. 986+93 TO STA. 987+11	RT	18
STA. 994+99 TO STA. 995+16	LT	17
STA. 995+57 TO STA. 995+87	LT	30
STA. 996+50 TO STA. 996+68	LT	18
STA. 997+69 TO STA. 997+89	RT	20
STA. 999+15 TO STA. 999+40	RT	25
STA. 999+91 TO STA. 1000+05	RT	14
TOTAL =		244

GUTTER REMOVAL

LOCATION		FOOT
STA. 1056+87 TO STA. 1058+00	RT	113
STA. 1058+90 TO STA. 1060+40	RT	150
STA. 1060+50 TO STA. 1063+95	RT	345
STA. 1064+05 TO STA. 1065+00	RT	95
STA. 1065+00 TO STA. 1065+75	RT	75
STA. 1065+85 TO STA. 1068+50	RT	265
STA. 1081+85 TO STA. 1095+00	LT	1,315
STA. 1095+00 TO STA. 1102+60	LT	760
STA. 1103+30 TO STA. 1110+00	LT	670
STA. 1110+00 TO STA. 1113+80	LT	380
STA. 1182+65 TO STA. 1185+00	RT	235
STA. 1185+00 TO STA. 1189+90	RT	490
STA. 1216+30 TO STA. 1216+90	RT	60
STA. 1217+55 TO STA. 1226+15	RT	860
STA. 1218+62 TO STA. 1224+48	LT	586
STA. 1224+63 TO STA. 1229+44	LT	481
STA. 1226+30 TO STA. 1230+00	RT	370
STA. 1229+59 TO STA. 1230+00	LT	41
STA. 1230+00 TO STA. 1230+37	RT	37
STA. 1230+00 TO STA. 1236+21	LT	621
STA. 1230+52 TO STA. 1232+38	RT	186
STA. 1232+53 TO STA. 1234+82	RT	229
STA. 1234+97 TO STA. 1240+60	RT	563
STA. 1236+36 TO STA. 1241+14	LT	478
STA. 1240+75 TO STA. 1242+92	RT	217
STA. 1241+24 TO STA. 1245+00	LT	376
STA. 1244+34 TO STA. 1245+00	RT	66
STA. 1245+00 TO STA. 1253+10	RT	810
STA. 1245+00 TO STA. 1252+65	LT	765
STA. 1252+75 TO STA. 1254+85	LT	210
STA. 1253+20 TO STA. 1255+85	RT	265
STA. 1255+95 TO STA. 1260+00	RT	405
STA. 1260+00 TO STA. 1260+35	RT	35
STA. 1260+40 TO STA. 1264+83	RT	443
STA. 1262+75 TO STA. 1266+03	LT	328
STA. 1264+93 TO STA. 1271+86	RT	693
STA. 1266+13 TO STA. 1271+30	LT	517
STA. 1271+96 TO STA. 1275+00	RT	304
STA. 1275+00 TO STA. 1277+92	RT	292
STA. 1282+20 TO STA. 1285+85	RT	365
STA. 1285+95 TO STA. 1290+00	RT	405
STA. 1290+00 TO STA. 1290+45	RT	45
TOTAL =		15,946

COMBINATION CURB AND GUTTER REMOVAL

LOCATION		FOOT
STA. 1000+28 TO STA. 1003+68	LT	340
STA. 1000+87 TO STA. 1005+00	RT	413
STA. 1001+00 TO STA. 1005+00	MEDIAN	800
STA. 1005+00 TO STA. 1007+04	RT	204
STA. 1005+00 TO STA. 1014+05	MEDIAN	1810
STA. 1007+73 TO STA. 1008+05	RT	32
STA. 1008+18 TO STA. 1008+43	RT	25
STA. 1008+95 TO STA. 1009+11	LT	16
STA. 1009+62 TO STA. 1017+24	RT	762
STA. 1010+58 TO STA. 1015+02	LT	444
STA. 1015+69 TO STA. 1020+00	LT	431
STA. 1020+00 TO STA. 1021+10	LT	110
STA. 1021+65 TO STA. 1022+72	LT	107
STA. 1036+38 TO STA. 1036+49	RT	11
STA. 1042+75 TO STA. 1042+78	MEDIAN	3
STA. 1043+16 TO STA. 1043+21	MEDIAN	5
STA. 1043+31 TO STA. 1043+34	MEDIAN	3
STA. 1044+84 TO STA. 1044+97	MEDIAN	13
STA. 1045+85 TO STA. 1045+92	MEDIAN	7
STA. 1045+96 TO STA. 1045+98	MEDIAN	2
STA. 1047+44 TO STA. 1047+49	MEDIAN	5
STA. 1048+77 TO STA. 1048+80	MEDIAN	3
STA. 1051+35 TO STA. 1051+41	MEDIAN	6
STA. 1051+64 TO STA. 1051+99	MEDIAN	35
STA. 1052+45 TO STA. 1052+48	MEDIAN	3
STA. 1053+02 TO STA. 1053+05	MEDIAN	3
STA. 1053+53 TO STA. 1053+58	MEDIAN	5
STA. 1053+67 TO STA. 1053+72	MEDIAN	5
STA. 1054+41 TO STA. 1054+52	MEDIAN	11
STA. 1056+40 TO STA. 1058+05	MEDIAN	330
STA. 1058+95 TO STA. 1065+00	MEDIAN	1210
STA. 1065+30 TO STA. 1068+00	MEDIAN	540
STA. 1068+00 TO STA. 1076+70	MEDIAN	1740
STA. 1081+30 TO STA. 1083+65	MEDIAN	470
STA. 1083+90 TO STA. 1084+30	MEDIAN	80
STA. 1098+40 TO STA. 1098+75	MEDIAN	70
STA. 1099+05 TO STA. 1099+45	MEDIAN	80
STA. 1109+58 TO STA. 1110+00	MEDIAN	84
STA. 1122+70 TO STA. 1125+00	MEDIAN	460
STA. 1125+00 TO STA. 1138+15	MEDIAN	2630
STA. 1151+25 TO STA. 1155+00	MEDIAN	750
STA. 1155+00 TO STA. 1159+00	MEDIAN	800
STA. 1159+00 TO STA. 1170+00	MEDIAN	2,200
STA. 1170+00 TO STA. 1171+35	MEDIAN	270
TOTAL =		17,328

MEDIAN REMOVAL

LOCATION	SQ. FT.
STA. 1076+70 TO STA. 1080+00	4,128
STA. 1080+00 TO STA. 1080+90	649
STA. 1109+58 TO STA. 1110+00	1,084
STA. 1110+00 TO STA. 1115+70	5,525
STA. 1116+60 TO STA. 1116+66	5,585
STA. 1122+64 TO STA. 1122+70	108
STA. 1138+15 TO STA. 1138+21	108
STA. 1144+20 TO STA. 1144+26	21
STA. 1145+10 TO STA. 1145+16	39
STA. 1171+35 TO STA. 1176+55	4,652
STA. 1177+20 TO STA. 1184+90	8,327
STA. 1185+65 TO STA. 1188+90	4,139
STA. 1189+70 TO STA. 1191+30	640
STA. 1217+81 TO STA. 1218+38	114
STA. 1218+97 TO STA. 1224+72	1,150
STA. 1225+65 TO STA. 1230+00	870
STA. 1230+00 TO STA. 1236+28	1,256
STA. 1236+74 TO STA. 1238+83	418
STA. 1239+81 TO STA. 1243+57	752
STA. 1244+57 TO STA. 1245+00	86
STA. 1245+00 TO STA. 1245+28	56
STA. 1246+28 TO STA. 1247+70	284
STA. 1248+29 TO STA. 1260+00	2,342
STA. 1260+00 TO STA. 1261+11	222
STA. 1262+14 TO STA. 1266+90	952
STA. 1267+50 TO STA. 1273+18	1,136
STA. 1273+79 TO STA. 1275+00	242
STA. 1275+00 TO STA. 1277+71	542
STA. 1278+73 TO STA. 1283+24	902
STA. 1283+84 TO STA. 1285+64	360
STA. 1286+64 TO STA. 1290+00	672
STA. 1290+00 TO STA. 1291+18	236
STA. 1295+68 TO STA. 1295+90	352
STA. 1304+56 TO STA. 1304+62	46
STA. 1308+14 TO STA. 1308+20	30
STA. 1311+16 TO STA. 1311+22	26
STA. 1312+00 TO STA. 1312+06	22
STA. 1317+56 TO STA. 1317+62	24
STA. 1318+75 TO STA. 1318+81	22
STA. 1319+76 TO STA. 1320+00	185
STA. 1320+00 TO STA. 1327+63	11,619
STA. 1328+40 TO STA. 1332+28	4,037
STA. 1333+10 TO STA. 1335+00	753
STA. 1335+00 TO STA. 1340+55	4,823
STA. 1341+76 TO STA. 1345+13	3,637
STA. 1345+85 TO STA. 1348+33	992
STA. 1349+29 TO STA. 1350+00	284
STA. 1350+00 TO STA. 1353+92	4,069
STA. 1354+70 TO STA. 1359+42	4,386
STA. 1360+40 TO STA. 1365+00	4,153
STA. 1366+05 TO STA. 1369+53	1,137
STA. 1370+40 TO STA. 1373+89	2,094
STA. 1374+48 TO STA. 1374+54	25
STA. 1380+30 TO STA. 1380+36	20
STA. 1381+67 TO STA. 1381+73	23
TOTAL =	90,356

AGGREGATE WEDGE SHOULDER, TYPE B

LOCATION	TON
RT. STA. 1230+05 TO RT. STA. 1233+00	22
RT. STA. 1240+35 TO RT. STA. 1242+95	20
RT. STA. 1244+30 TO RT. STA. 1247+90	27
RT. STA. 1252+60 TO RT. STA. 1259+35	51
RT. STA. 1259+35 TO RT. STA. 1260+30	14
RT. STA. 1260+30 TO RT. STA. 1265+65	41
RT. STA. 1268+45 TO RT. STA. 1278+00	73
RT. STA. 1285+35 TO RT. STA. 1290+50	39
TOTAL =	287

HOT-MIX ASPHALT SHOULDERS

LOCATION	TON
LT. STA. 1171+45 TO LT. STA. 1175+40	44.2
RT. STA. 1171+50 TO RT. STA. 1192+60	236.4
LT. STA. 1178+20 TO LT. STA. 1183+90	63.9
LT. STA. 1271+30 TO LT. STA. 1277+85	73.3
LT. STA. 1278+55 TO LT. STA. 1285+90	82.3
LT. STA. 1286+60 TO LT. STA. 1291+20	51.5
TOTAL =	552

FLUSH INLET BOX FOR MEDIAN, STANDARD 542546

LOCATION	EACH
STA. 1100+35 MEDIAN	1
TOTAL =	1

CATCH BASINS TO BE ADJUSTED

LOCATION	EACH
STA. 1008+67 MEDIAN	1
TOTAL =	1

INLETS TO BE ADJUSTED WITH NEW TYPE 3 FRAME AND GRATE

LOCATION	EACH
STA. 1008+15 LT	1
STA. 1008+15 RT	1
STA. 1021+63 LT	1
TOTAL =	3

FRAMES AND GRATES, TYPE 3

LOCATION	EACH
STA. 1000+83 LT	1
STA. 1003+70 RT	1
STA. 1018+65 LT	1
TOTAL =	3

FRAMES AND GRATES, TYPE 12

LOCATION	EACH
STA. 1056+84 LT	1
STA. 1060+46 LT	1
STA. 1064+05 LT	1
STA. 1065+81 LT	1
STA. 1067+68 LT	1
STA. 1152+85 LT	1
STA. 1154+73 LT	1
STA. 1171+69 LT	1
STA. 1173+00 RT	1
STA. 1180+00 RT	1
TOTAL =	10

GRATES AND COVERS, TYPE 2A

LOCATION	EACH
STA. 1219+12 RT	1
STA. 1223+65 RT	1
TOTAL =	2

REMOVING INLETS

LOCATION	EACH
STA. 1100+35 5' RT	1
TOTAL =	1

CLASS SI CONCRETE (OUTLET)

LOCATION	CU. YD.	DESCRIPTION
RT. STA. 1189+40 TO RT. STA. 1189+90	5.0	OUTLET FOR TY B GUTTER
RT. STA. 1218+84 TO RT. STA. 1219+40	4.5	OUTLET TY 2 FOR TY A GUTTER
RT. STA. 1223+37 TO RT. STA. 1223+93	4.5	OUTLET TY 2 FOR TY A GUTTER
TOTAL =	14.0	

(ESTIMATED QUANTITY)

CONCRETE CURB, TYPE B

LOCATION		FOOT
STA. 980+06 TO STA. 980+21	RT	15
STA. 980+79 TO STA. 980+97	LT	18
STA. 983+65 TO STA. 984+25	RT	60
STA. 984+28 TO STA. 984+33	LT	5
STA. 985+34 TO STA. 985+38	RT	4
STA. 986+93 TO STA. 987+11	RT	18
STA. 994+99 TO STA. 995+16	LT	17
STA. 995+57 TO STA. 995+87	LT	30
STA. 996+50 TO STA. 996+68	LT	18
STA. 997+69 TO STA. 997+89	RT	20
STA. 999+15 TO STA. 999+40	RT	25
STA. 999+91 TO STA. 1000+05	RT	14
TOTAL =		244

CONCRETE GUTTER, TYPE A

LOCATION		FOOT
STA. 1216+30 TO STA. 1216+90	RT	60
STA. 1217+55 TO STA. 1218+84	RT	129
STA. 1218+62 TO STA. 1224+48	LT	586
STA. 1219+40 TO STA. 1223+37	RT	397
STA. 1223+93 TO STA. 1226+15	RT	222
STA. 1224+63 TO STA. 1229+44	LT	481
STA. 1226+15 TO STA. 1230+00	RT	385
STA. 1229+59 TO STA. 1230+00	LT	41
STA. 1230+00 TO STA. 1230+37	RT	37
STA. 1230+00 TO STA. 1236+21	LT	621
STA. 1230+52 TO STA. 1232+38	RT	186
STA. 1232+53 TO STA. 1234+82	RT	229
STA. 1234+97 TO STA. 1240+60	RT	563
STA. 1240+75 TO STA. 1242+92	RT	217
TOTAL =		4,154

CONCRETE GUTTER, TYPE B

LOCATION		FOOT
STA. 1056+87 TO STA. 1058+00	RT	113
STA. 1058+90 TO STA. 1060+40	RT	150
STA. 1060+50 TO STA. 1063+95	RT	345
STA. 1064+05 TO STA. 1065+00	RT	95
STA. 1065+00 TO STA. 1065+75	RT	75
STA. 1065+85 TO STA. 1068+50	RT	265
STA. 1182+65 TO STA. 1185+00	RT	235
STA. 1185+00 TO STA. 1189+40	RT	440
STA. 1236+36 TO STA. 1241+14	LT	478
STA. 1241+24 TO STA. 1245+00	LT	376
STA. 1244+34 TO STA. 1245+00	RT	66
STA. 1245+00 TO STA. 1252+65	LT	765
STA. 1252+75 TO STA. 1254+85	LT	210
STA. 1245+00 TO STA. 1253+10	RT	810
STA. 1253+20 TO STA. 1255+85	RT	265
STA. 1255+95 TO STA. 1260+00	RT	405
STA. 1262+75 TO STA. 1266+03	LT	328
STA. 1266+13 TO STA. 1271+30	LT	517
STA. 1260+00 TO STA. 1260+35	RT	35
STA. 1260+40 TO STA. 1264+83	RT	443
STA. 1264+93 TO STA. 1271+86	RT	693
STA. 1271+96 TO STA. 1275+00	RT	304
STA. 1275+00 TO STA. 1277+92	RT	292
STA. 1282+20 TO STA. 1285+85	RT	365
STA. 1285+95 TO STA. 1290+00	RT	405
STA. 1290+00 TO STA. 1290+45	RT	45
TOTAL =		8,520

COMBINATION CONCRETE CURB AND GUTTER, TYPE B-6.12

LOCATION		FOOT
STA. 1042+75 TO STA. 1042+78	RT	3
STA. 1043+16 TO STA. 1043+21	RT	5
STA. 1043+31 TO STA. 1043+34	RT	3
STA. 1044+84 TO STA. 1044+97	RT	13
STA. 1045+85 TO STA. 1045+92	LT	7
STA. 1045+96 TO STA. 1045+98	RT	2
STA. 1047+44 TO STA. 1047+49	LT	5
STA. 1048+77 TO STA. 1048+80	LT	3
STA. 1051+35 TO STA. 1051+41	RT	6
STA. 1051+64 TO STA. 1051+99	RT	35
STA. 1052+45 TO STA. 1052+48	RT	3
STA. 1053+02 TO STA. 1053+05	RT	3
STA. 1053+53 TO STA. 1053+58	RT	5
STA. 1053+67 TO STA. 1053+72	RT	5
STA. 1054+41 TO STA. 1054+52	RT	11
TOTAL =		109

COMBINATION CONCRETE CURB AND GUTTER, TYPE B-6.24

LOCATION		FOOT
STA. 1000+28 TO STA. 1003+68	LT	340
STA. 1000+87 TO STA. 1005+00	RT	413
STA. 1001+00 TO STA. 1005+00	MEDIAN	800
STA. 1005+00 TO STA. 1007+04	RT	204
STA. 1005+00 TO STA. 1014+05	MEDIAN	1810
STA. 1007+73 TO STA. 1008+05	RT	32
STA. 1008+18 TO STA. 1008+43	RT	25
STA. 1008+95 TO STA. 1009+11	LT	16
STA. 1009+62 TO STA. 1017+24	RT	762
STA. 1010+58 TO STA. 1015+02	LT	444
STA. 1015+69 TO STA. 1020+00	LT	431
STA. 1020+00 TO STA. 1021+10	LT	110
STA. 1021+65 TO STA. 1022+72	LT	107
STA. 1036+38 TO STA. 1036+49	RT	11
TOTAL =		5,505

COMBINATION CONCRETE CURB AND GUTTER, TYPE M-6.06

LOCATION	FOOT
STA. 1171+35 TO STA. 1173+62 MEDIAN	454
STA. 1177+20 TO STA. 1182+50 MEDIAN	1,060
STA. 1185+65 TO STA. 1188+90 MEDIAN	650
TOTAL =	2,164

COMBINATION CONCRETE CURB AND GUTTER, TYPE M-6.12

LOCATION	FOOT
STA. 1056+40 TO STA. 1058+05 MEDIAN	330
STA. 1058+95 TO STA. 1065+00 MEDIAN	1,210
STA. 1065+30 TO STA. 1068+00 MEDIAN	540
STA. 1076+70 TO STA. 1078+95 MEDIAN	450
STA. 1081+30 TO STA. 1083+65 MEDIAN	470
STA. 1109+58 TO STA. 1110+00 MEDIAN	84
STA. 1110+00 TO STA. 1112+30 MEDIAN	460
STA. 1151+25 TO STA. 1155+00 MEDIAN	750
STA. 1155+00 TO STA. 1159+00 MEDIAN	800
TOTAL =	5,094

CONCRETE MEDIAN SURFACE, 4 INCH

LOCATION	SQ. FT.
STA. 1001+00 TO STA. 1005+00	2,931
STA. 1005+00 TO STA. 1014+05	7,475
STA. 1076+70 TO STA. 1078+95	2,796
STA. 1081+30 TO STA. 1083+65	5,058
STA. 1109+58 TO STA. 1110+00	1,324
STA. 1110+00 TO STA. 1112+30	2,995
STA. 1171+35 TO STA. 1173+35	2,677
STA. 1177+20 TO STA. 1182+50	6,193
STA. 1185+65 TO STA. 1188+90	3,545
TOTAL =	34,994

CONCRETE MEDIAN, TYPE SM-6.06

LOCATION	SQ. FT.
STA. 1173+62 TO STA. 1176+55	1,172
STA. 1182+50 TO STA. 1184+90	960
TOTAL =	2,132

CONCRETE MEDIAN, TYPE SM-6.12

LOCATION	SQ. FT.
STA. 1057+99 TO STA. 1058+05	19
STA. 1058+95 TO STA. 1059+01	30
STA. 1064+94 TO STA. 1065+00	133
STA. 1065+30 TO STA. 1065+36	107
STA. 1067+94 TO STA. 1068+00	107
STA. 1078+95 TO STA. 1080+00	840
STA. 1080+00 TO STA. 1080+90	720
STA. 1112+30 TO STA. 1115+70	2,040
STA. 1116+60 TO STA. 1116+66	14
STA. 1122+64 TO STA. 1122+70	95
STA. 1138+15 TO STA. 1138+21	124
STA. 1144+20 TO STA. 1144+26	12
STA. 1145+10 TO STA. 1145+16	18
STA. 1158+94 TO STA. 1159+00	127
STA. 1304+56 TO STA. 1304+62	23
STA. 1308+14 TO STA. 1308+20	23
STA. 1311+16 TO STA. 1311+22	23
STA. 1312+00 TO STA. 1312+06	23
STA. 1317+56 TO STA. 1317+62	23
STA. 1318+75 TO STA. 1318+81	23
STA. 1319+76 TO STA. 1319+82	23
STA. 1374+48 TO STA. 1374+54	20
STA. 1380+30 TO STA. 1380+06	15
STA. 1381+67 TO STA. 1381+73	15
TOTAL =	4,597

CORRUGATED MEDIAN

LOCATION	SQ. FT.
STA. 1295+68 TO STA. 1295+90	355
TOTAL =	355

STEEL PLATE BEAM GUARD RAIL, TYPE A, 6 FOOT POSTS
TRAFFIC BARRIER TERMINAL, TYPE 2
TRAFFIC BARRIER TERMINAL, TYPE 6
TRAFFIC BARRIER TERMINAL, TYPE 6A
TRAFFIC BARRIER TERMINAL, TYPE 6B
TRAFFIC BARRIER TERMINAL, TYPE 1 (SPECIAL) TANGENT
GUARDRAIL MARKERS, TYPE A
TERMINAL MARKER - DIRECT APPLIED

LOCATION	SPBGR TYPE A 6' POST (FOOT)	TBT TYPE 2 (EACH)	TBT TYPE 6 (EACH)	TBT TYPE 6A (EACH)	TBT TYPE 6B (EACH)	TBT TYPE 1 (SPECIAL) TANGENT (EACH)	GUARDRAIL MARKER TYPE A (EACH)	TERM. MRK. DIRECT APPLIED (EACH)
LT. STA. 1083+72 TO LT. STA. 1085+87	150.0	1				1	4	1
RT. STA. 1084+07 TO RT. STA. 1085+09	37.5	1				1	4	1
RT. STA. 1100+81 TO RT. STA. 1102+75	100.0			1		1	4	1
(EB MEDIAN) RT. STA. 1100+81 TO RT. STA. 1102+75	100.0			1		1	4	1
LT. STA. 1103+24 TO LT. STA. 1105+17	100.0		1			1	4	1
(WB MEDIAN) LT. STA. 1103+24 TO LT. STA. 1105+17	100.0		1			1	4	1
RT. STA. 1179+67 TO RT. STA. 1181+60	100.0				1	1	4	1
RT. STA. 1213+95 TO RT. STA. 1216+98	237.5	1				1	4	1
LT. STA. 1218+54 TO LT. STA. 1220+54	150.0					1	4	1
RT. STA. 1228+37 TO RT. STA. 1235+39	637.5	1				1	5	1
LT. STA. 1229+34 TO LT. STA. 1236+36.5	637.5	1				1	5	1
RT. STA. 1239+56 TO RT. STA. 1242+84	262.5	1				1	4	1
LT. STA. 1241+25 TO LT. STA. 1245+40	350.0	1				1	5	1
RT. STA. 1250+91 TO RT. STA. 1265+06	1350.0	1				1	7	1
LT. STA. 1252+84 TO LT. STA. 1257+85.5	437.5	1				1	5	1
LT. STA. 1262+48 TO LT. STA. 1267+12	400.0	1				1	5	1
LT. STA. 1271+55 TO LT. STA. 1274+95	275	1				1	4	1
LT. STA. 1279+42 TO LT. STA. 1282+57	250.0	1				1	4	1
RT. STA. 1283+81 TO RT. STA. 1290+33	587.5	1				1	5	1
LT. STA. 1288+80 TO LT. STA. 1293+57.5	412.5	1				1	5	1
TOTALS =	6675	14	2	2	1	20	90	20

GUARDRAIL REMOVAL

LOCATION	FOOT
LT. STA. 1083+74 TO LT. STA. 1085+00	126
RT. STA. 1084+43 TO RT. STA. 1085+52	109
RT. STA. 1101+10 TO RT. STA. 1102+75	165
RT. STA. 1101+72 TO RT. STA. 1102+74	102
LT. STA. 1103+09 TO LT. STA. 1104+50	141
LT. STA. 1103+10 TO LT. STA. 1104+13	103
RT. STA. 1180+91 TO RT. STA. 1181+60	69
RT. STA. 1215+37 TO RT. STA. 1216+91	154
LT. STA. 1218+54 TO LT. STA. 1218+86	32
LT. STA. 1229+29 TO LT. STA. 1236+48	726 *
RT. STA. 1230+08 TO RT. STA. 1232+87	279 *
RT. STA. 1240+39 TO RT. STA. 1242+81	242 *
LT. STA. 1241+06 TO LT. STA. 1244+60	354 *
LT. STA. 1252+42 TO LT. STA. 1256+45	403 *
RT. STA. 1252+66 TO RT. STA. 1265+43	1,277 *
LT. STA. 1261+95 TO LT. STA. 1267+18	533 *
LT. STA. 1271+32 TO LT. STA. 1274+36	304 *
LT. STA. 1279+21 TO LT. STA. 1281+35	214 *
RT. STA. 1285+36 TO RT. STA. 1290+33	504 *
LT. STA. 1288+95 TO LT. STA. 1292+11	316 *
TOTAL =	6,153

* GUARDRAIL POSTS TO BE CUT
(SEE SPECIAL PROVISION)

SHOULDER RUMBLE STRIPS

LOCATION	FOOT
LT. STA. 1171+45 TO LT. STA. 1175+40	395
RT. STA. 1171+50 TO RT. STA. 1192+60	2,110
LT. STA. 1178+20 TO LT. STA. 1183+90	570
* STA. 1216+65 TO STA. 1291+20	7455
LT. STA. 1271+30 TO LT. STA. 1277+85	655
LT. STA. 1278+55 TO LT. STA. 1285+90	735
LT. STA. 1286+60 TO LT. STA. 1291+20	460
TOTAL =	12,380

* PLACED IN CENTERLINE UNDIVIDED HIGHWAY
PAID FOR AS SHOULDER RUMBLE STRIPS
(SEE STRIPING PLANS)

WORK ZONE PAVEMENT MARKING REMOVAL

	SQ. FT.
SHORT-TERM PAVEMENT MARKING	7,264
TEMPORARY PAVEMENT MARKING - LETTERS AND SYMBOLS	1,599
TEMPORARY PAVEMENT MARKING - LINE 4"	57,395
TEMPORARY PAVEMENT MARKING - LINE 8"	317
TEMPORARY PAVEMENT MARKING - LINE 12"	4,761
TEMPORARY PAVEMENT MARKING - LINE 24"	2,406
TOTAL =	73,742

SHORT-TERM PAVEMENT MARKING

LOCATION	DESCRIPTION	FOOT
LT. STA. 980+00 TO LT. STA. 1050+00	(WHITE SKIP-DASH)	1,920
RT. STA. 980+00 TO RT. STA. 1050+00	(WHITE SKIP-DASH)	1,920
LT. STA. 1050+90 TO LT. STA. 1144+20	(WHITE SKIP-DASH)	2,556
RT. STA. 1050+90 TO RT. STA. 1144+20	(WHITE SKIP-DASH)	2,556
LT. STA. 1145+15 TO LT. STA. 1176+45	(WHITE SKIP-DASH)	864
RT. STA. 1145+15 TO RT. STA. 1176+45	(WHITE SKIP-DASH)	864
LT. STA. 1177+25 TO LT. STA. 1184+90	(WHITE SKIP-DASH)	216
RT. STA. 1177+25 TO RT. STA. 1184+90	(WHITE SKIP-DASH)	216
LT. STA. 1185+75 TO LT. STA. 1198+00	(WHITE SKIP-DASH)	336
RT. STA. 1185+75 TO RT. STA. 1198+00	(WHITE SKIP-DASH)	336
LT. STA. 1199+20 TO LT. STA. 1205+95	(WHITE SKIP-DASH)	192
RT. STA. 1199+20 TO RT. STA. 1205+40	(WHITE SKIP-DASH)	180
LT. STA. 1206+75 TO LT. STA. 1300+65	(WHITE SKIP-DASH)	2,568
RT. STA. 1206+90 TO RT. STA. 1300+65	(WHITE SKIP-DASH)	2,568
LT. STA. 1301+85 TO LT. STA. 1317+70	(WHITE SKIP-DASH)	444
RT. STA. 1301+85 TO RT. STA. 1317+90	(WHITE SKIP-DASH)	444
LT. STA. 1318+65 TO LT. STA. 1327+55	(WHITE SKIP-DASH)	252
RT. STA. 1318+80 TO RT. STA. 1327+55	(WHITE SKIP-DASH)	240
LT. STA. 1328+40 TO LT. STA. 1353+90	(WHITE SKIP-DASH)	696
RT. STA. 1328+40 TO RT. STA. 1354+05	(WHITE SKIP-DASH)	708
LT. STA. 1354+70 TO LT. STA. 1365+00	(WHITE SKIP-DASH)	288
RT. STA. 1354+70 TO RT. STA. 1365+00	(WHITE SKIP-DASH)	288
LT. STA. 1366+05 TO LT. STA. 1380+40	(WHITE SKIP-DASH)	396
RT. STA. 1366+05 TO RT. STA. 1380+65	(WHITE SKIP-DASH)	408
STA. 1378+40 TO STA. 1380+40	(WHITE SKIP-DASH)	60
LT. STA. 1381+55 TO LT. STA. 1385+25	(WHITE SKIP-DASH)	108
LT. STA. 1381+70 TO LT. STA. 1383+80	(WHITE SKIP-DASH)	60
RT. STA. 1381+70 TO RT. STA. 1385+25	(WHITE SKIP-DASH)	108
TOTAL =		21,792

THERMOPLASTIC PAVEMENT MARKING - LETTERS AND SYMBOLS

LOCATION/DESCRIPTION	SQ. FT.
RT. STA. 1029+00 (WHITE RAILROAD CROSSING)	61.2
LT. STA. 1034+85 (WHITE RAILROAD CROSSING)	61.2
LT. STA. 1038+15 (WHITE LEFT TURN ARROW)	15.6
LT. STA. 1038+80 (WHITE LEFT TURN ARROW)	15.6
RT. STA. 1048+70 (WHITE LEFT TURN ARROW)	15.6
RT. STA. 1049+60 (WHITE LEFT TURN ARROW)	15.6
RT. STA. 1051+20 (WHITE LEFT TURN ARROW)	15.6
LT. STA. 1051+95 (WHITE RIGHT TURN ARROW)	15.6
RT. STA. 1052+15 (WHITE LEFT TURN ARROW)	15.6
LT. STA. 1055+35 (WHITE RIGHT TURN ARROW)	15.6
RT. STA. 1079+40 (WHITE LEFT TURN ARROW)	15.6
RT. STA. 1080+50 (WHITE LEFT TURN ARROW)	15.6
RT. STA. 1113+00 (WHITE LEFT TURN ARROW)	15.6
RT. STA. 1115+25 (WHITE LEFT TURN ARROW)	15.6
RT. STA. 1141+70 (WHITE LEFT TURN ARROW)	15.6
RT. STA. 1143+20 (WHITE LEFT TURN ARROW)	15.6
STA. 1145+70 (WHITE LEFT TURN ARROW)	15.6
STA. 1147+70 (WHITE LEFT TURN ARROW)	15.6
RT. STA. 1174+35 (WHITE LEFT TURN ARROW)	15.6
RT. STA. 1175+95 (WHITE LEFT TURN ARROW)	15.6
RT. STA. 1183+05 (WHITE LEFT TURN ARROW)	15.6
RT. STA. 1184+35 (WHITE LEFT TURN ARROW)	15.6
RT. STA. 1197+10 (WHITE RIGHT TURN ARROW)	15.6
LT. STA. 1197+10 (WHITE LEFT TURN ARROW)	15.6
LT. STA. 1197+80 (WHITE LEFT TURN ARROW)	15.6
RT. STA. 1197+80 (WHITE RIGHT TURN ARROW)	15.6
LT. STA. 1199+55 (WHITE LEFT TURN ARROW)	15.6
LT. STA. 1199+55 (WHITE RIGHT TURN & THROUGH ARROW)	26.0
RT. STA. 1202+35 (WHITE RIGHT TURN ARROW)	15.6
LT. STA. 1202+70 (WHITE LEFT TURN ARROW)	15.6
RT. STA. 1204+45 (WHITE RIGHT TURN ARROW)	15.6
LT. STA. 1207+25 (WHITE LEFT TURN ARROW)	15.6
LT. STA. 1208+45 (WHITE LEFT TURN ARROW)	15.6
RT. STA. 1297+55 (WHITE LEFT TURN ARROW)	15.6
RT. STA. 1298+80 (WHITE LEFT TURN ARROW)	15.6
RT. STA. 1300+00 (WHITE LEFT TURN ARROW)	15.6
LT. STA. 1302+20 (WHITE LEFT TURN ARROW)	15.6
LT. STA. 1302+65 (WHITE LEFT TURN ARROW)	15.6
RT. STA. 1303+80 (WHITE LEFT TURN ARROW)	15.6
RT. STA. 1304+25 (WHITE LEFT TURN ARROW)	15.6
RT. STA. 1307+30 (WHITE LEFT TURN ARROW)	15.6
RT. STA. 1307+95 (WHITE LEFT TURN ARROW)	15.6
RT. STA. 1310+40 (WHITE LEFT TURN ARROW)	15.6
RT. STA. 1310+90 (WHITE LEFT TURN ARROW)	15.6
LT. STA. 1312+55 (WHITE LEFT TURN ARROW)	15.6
LT. STA. 1313+55 (WHITE LEFT TURN ARROW)	15.6
RT. STA. 1316+85 (WHITE LEFT TURN ARROW)	15.6
RT. STA. 1317+35 (WHITE LEFT TURN ARROW)	15.6
RT. STA. 1317+75 (WHITE RIGHT TURN ARROW)	15.6
LT. STA. 1318+85 (WHITE RIGHT TURN ARROW)	15.6
LT. STA. 1319+10 (WHITE LEFT TURN ARROW)	15.6
LT. STA. 1319+45 (WHITE LEFT TURN ARROW)	15.6
STA. 1321+75 (WHITE TWO-WAY LEFT TURN ARROW)	15.6
STA. 1322+05 (WHITE TWO-WAY LEFT TURN ARROW)	15.6
STA. 1324+25 (WHITE TWO-WAY LEFT TURN ARROW)	15.6
STA. 1324+55 (WHITE TWO-WAY LEFT TURN ARROW)	15.6
STA. 1326+70 (WHITE LEFT TURN ARROW)	15.6
STA. 1327+25 (WHITE LEFT TURN ARROW)	15.6
RT. STA. 1327+30 (WHITE RIGHT TURN ARROW)	15.6
LT. STA. 1328+65 (WHITE RIGHT TURN ARROW)	15.6
STA. 1328+75 (WHITE LEFT TURN ARROW)	15.6
STA. 1329+20 (WHITE LEFT TURN ARROW)	15.6
STA. 1339+75 (WHITE LEFT TURN ARROW)	15.6
STA. 1340+20 (WHITE LEFT TURN ARROW)	15.6
RT. STA. 1340+70 (WHITE RIGHT TURN ARROW)	15.6
STA. 1342+00 (WHITE LEFT TURN ARROW)	15.6
STA. 1342+50 (WHITE LEFT TURN ARROW)	15.6
STA. 1353+15 (WHITE LEFT TURN ARROW)	15.6
STA. 1353+55 (WHITE LEFT TURN ARROW)	15.6
RT. STA. 1353+75 (WHITE RIGHT TURN ARROW)	15.6
LT. STA. 1355+00 (WHITE RIGHT TURN ARROW)	15.6
STA. 1355+05 (WHITE LEFT TURN ARROW)	15.6
STA. 1355+50 (WHITE LEFT TURN ARROW)	15.6
LT. STA. 1364+10 (WHITE LEFT TURN ARROW)	15.6
LT. STA. 1364+75 (WHITE LEFT TURN ARROW)	15.6
CONTINUED	

LT. STA. 1366+40 (WHITE LEFT TURN ARROW)	15.6
LT. STA. 1366+45 (WHITE RIGHT TURN ARROW)	15.6
LT. STA. 1367+10 (WHITE LEFT TURN ARROW)	15.6
STA. 1368+50 (WHITE LEFT TURN ARROW)	15.6
STA. 1370+70 (WHITE LEFT TURN ARROW)	15.6
STA. 1371+45 (WHITE LEFT TURN ARROW)	15.6
STA. 1372+75 (WHITE LEFT TURN ARROW)	15.6
STA. 1373+45 (WHITE LEFT TURN ARROW)	15.6
LT. STA. 1374+80 (WHITE LEFT TURN ARROW)	15.6
LT. STA. 1375+75 (WHITE LEFT TURN ARROW)	15.6
RT. STA. 1377+55 (WHITE LEFT TURN ARROW)	15.6
LT. STA. 1378+70 (WHITE LEFT TURN ARROW)	15.6
RT. STA. 1378+70 (WHITE LEFT TURN ARROW)	15.6
LT. STA. 1379+75 (WHITE LEFT TURN ARROW)	15.6
RT. STA. 1379+75 (WHITE LEFT TURN ARROW)	15.6
LT. STA. 1382+10 (2 WHITE LEFT TURN ARROWS)	31.2
LT. STA. 1383+45 (2 WHITE LEFT TURN ARROWS)	31.2
LT. STA. 1384+60 (WHITE LEFT TURN ARROW)	15.6
TOTAL =	1,599.2

NOTE:
TEMPORARY PAVEMENT MARKING QUANTITIES SAME AS PERMANENT PAVEMENT MARKING QUANTITIES

PAVEMENT PATCHING SCHEDULE

LOCATION	RT/LT/TL	LENGTH (FEET)	WIDTH (FEET)	PAVEMENT PATCHING 14" TYPE 2 (SQ YDS)	TYPE 3 (SQ YDS)	TYPE 4 (SQ YDS)	COMMENTS
WEST BOUND							
982+70	RT	6	12	8			
990+70	RT	20	12			27	
992+40	LT	12	12		16		
996+90	RT	6	12	8			
998+50	RT	6	12	8			
999+00	RT	15	12		20		
1003+60	RT	8	12	11			
1005+80	RT	40	6			27	
1006+80	RT	8	12				
1006+80	LT	8	12	11			
1010+50	RT	6	12	8			
1010+50	LT	6	12	8			
1022+00	RT	12	12		16		
1044+85	RT	12	12		16		
1044+85	LT	12	12		16		
1047+60	RT	6	12				
1119+00	RT	6	12	8			
1130+50	LT	8	12	11			
1196+20	RT	8	12	11			
1221+00	RT	8	12	11			
1221+00	LT	8	12	11			
1234+50	RT	8	12	11			
1234+50	LT	8	12	11			
1271+50	RT	6	12	8			
1271+50	LT	6	12	8			
1280+70	RT	6	12	8			
1280+70	LT	6	12	8			
1309+80	RT	6	12	8			
1309+80	LT	6	12	8			
1341+20	TL	8	12	11			
1363+90	RT	6	12	8			
1363+90	LT	6	12	8			
WEST BOUND TOTALS				211	84	54	

PAVEMENT PATCHING SCHEDULE

LOCATION	RT/LT/TL	LENGTH (FEET)	WIDTH (FEET)	PAVEMENT PATCHING 14" TYPE 2 (SQ YDS)	TYPE 3 (SQ YDS)	TYPE 4 (SQ YDS)	COMMENTS
EAST BOUND							
989+60	RT	6	12	8			
992+40	LT	12	12		16		
1010+50	RT	6	12	8			
1010+50	LT	6	12	8			
1012+80	LT	6	12	8			
1015+75	RT	6	12	8			
1015+75	LT	6	12	8			
1044+85	RT	12	12		16		
1044+85	LT	12	12		16		
1082+00	LT	10	12	13			
1095+80	RT	120	6			80	
1112+60	TL	8	8	7			
1113+00	TL	8	8	7			
1113+20	TL	8	8	7			
1113+75	TL	8	10	9			
1114+00	TL	8	12	11			
1114+50	TL	15	12		20		
1121+00	RT	40	12			53	
1141+60	TL	6	12	8			
1142+20	TL	6	12	8			
1143+00	TL	6	12	8			
1221+00	RT	8	12	11			
1221+00	LT	8	12	11			
1234+50	RT	8	12				
1234+50	LT	8	12	11			
1253+50	RT	6	12	8			
1253+50	LT	6	12	8			
1271+50	RT	6	12	8			
1271+50	LT	6	12	8			
1282+70	RT	8	12	11			
1282+70	LT	8	12	11			
EASTBOUND TOTALS				213	68	133	
WEST BOUND TOTALS				211	84	54	
EASTBOUND TOTALS				213	68	133	
SUB-TOTAL				424	152	187	
15% FOR ANTICIPATED FAILURES				64	23	28	
GRAND TOTALS				488	175	215	

THERMOPLASTIC PAVEMENT MARKING - LINE 4"

LOCATION/DESCRIPTION					FOOT
LT. STA. 980+00	TO	LT. STA. 1050+00	(WHITE SKIP-DASH)		1,750
RT. STA. 980+00	TO	RT. STA. 1050+00	(WHITE SKIP-DASH)		1,750
STA. 980+30	TO	STA. 993+85	(DOUBLE YELLOW)		2,710
STA. 994+70	TO	STA. 1000+00	(DOUBLE YELLOW)		1,060
LT. STA. 999+85	TO	LT. STA. 1015+05	(WHITE EDGELINE)		1,520
LT. STA. 1000+00	TO	LT. STA. 1014+95	(YELLOW EDGELINE)		1,495
RT. STA. 1000+00	TO	RT. STA. 1014+95	(YELLOW EDGELINE)		1,495
RT. STA. 1000+85	TO	RT. STA. 1016+80	(WHITE EDGELINE)		1,595
STA. 1014+95	TO	STA. 1032+65	(DOUBLE YELLOW)		3,540
LT. STA. 1015+70	TO	LT. STA. 1021+10	(WHITE EDGELINE)		540
RT. STA. 1019+00	TO	RT. STA. 1021+20	(WHITE EDGELINE)		220
LT. STA. 1021+65	TO	LT. STA. 1049+00	(WHITE EDGELINE)		2,735
RT. STA. 1022+60	TO	RT. STA. 1036+55	(WHITE EDGELINE)		1,395
LT. STA. 1032+65	TO	LT. STA. 1036+55	(DOUBLE YELLOW)		780
RT. STA. 1032+65	TO	RT. STA. 1036+55	(DOUBLE YELLOW)		780
STA. 1037+70	TO	STA. 1039+05	(DOUBLE YELLOW)		270
LT. STA. 1037+70	TO	LT. STA. 1038+85	(WHITE TURN LANE)		115
RT. STA. 1037+80	TO	RT. STA. 1049+10	(WHITE EDGELINE)		1,130
LT. STA. 1038+85	TO	LT. STA. 1040+45	(WHITE DOTTED)		40
LT. STA. 1039+05	TO	LT. STA. 1041+85	(DOUBLE YELLOW)		560
RT. STA. 1039+05	TO	RT. STA. 1041+85	(DOUBLE YELLOW)		560
STA. 1041+85	TO	STA. 1045+05	(YELLOW EDGELINE)		320
LT. STA. 1041+85	TO	LT. STA. 1049+90	(YELLOW EDGELINE)		805
RT. STA. 1041+85	TO	RT. STA. 1049+90	(YELLOW EDGELINE)		805
RT. STA. 1047+00	TO	RT. STA. 1048+15	(WHITE DOTTED)		30
RT. STA. 1048+20	TO	RT. STA. 1049+90	(WHITE TURN LANE)		170
STA. 1050+90	TO	STA. 1052+60	(WHITE TURN LANE)		170
STA. 1050+90	TO	STA. 1067+90	(YELLOW EDGELINE)		1,700
RT. STA. 1050+90	TO	RT. STA. 1067+90	(YELLOW EDGELINE)		1,700
LT. STA. 1050+90	TO	LT. STA. 1144+20	(WHITE SKIP-DASH)		2,340
RT. STA. 1050+90	TO	RT. STA. 1144+20	(WHITE SKIP-DASH)		2,340
LT. STA. 1051+30	TO	LT. STA. 1056+10	(WHITE TURN LANE)		480
LT. STA. 1051+70	TO	LT. STA. 1058+15	(WHITE EDGELINE)		645
RT. STA. 1051+80	TO	RT. STA. 1144+20	(WHITE EDGELINE)		9,240
LT. STA. 1052+60	TO	LT. STA. 1054+40	(WHITE DOTTED)		46
LT. STA. 1056+15	TO	LT. STA. 1057+90	(WHITE DOTTED)		44
LT. STA. 1059+40	TO	LT. STA. 1080+50	(WHITE EDGELINE)		2,110
LT. STA. 1067+90	TO	LT. STA. 1076+65	(DOUBLE YELLOW)		1,750
RT. STA. 1067+90	TO	RT. STA. 1076+65	(DOUBLE YELLOW)		1,750
LT. STA. 1076+65	TO	LT. STA. 1080+90	(YELLOW EDGELINE)		425
RT. STA. 1076+65	TO	RT. STA. 1080+90	(YELLOW EDGELINE)		425
RT. STA. 1078+95	TO	RT. STA. 1080+75	(WHITE TURN LANE)		180
LT. STA. 1081+25	TO	LT. STA. 1115+70	(YELLOW EDGELINE)		3,445
RT. STA. 1081+25	TO	RT. STA. 1115+70	(YELLOW EDGELINE)		3,445
LT. STA. 1081+75	TO	LT. STA. 1112+40	(WHITE EDGELINE)		3,065
RT. STA. 1112+55	TO	RT. STA. 1115+65	(WHITE TURN LANE)		310
LT. STA. 1113+00	TO	LT. STA. 1115+40	(WHITE EDGELINE)		240
LT. STA. 1116+60	TO	LT. STA. 1122+60	(YELLOW EDGELINE)		600
RT. STA. 1116+60	TO	RT. STA. 1122+60	(YELLOW EDGELINE)		600
LT. STA. 1116+60	TO	LT. STA. 1143+55	(WHITE EDGELINE)		2,695
LT. STA. 1122+60	TO	LT. STA. 1138+25	(DOUBLE YELLOW)		3,130
RT. STA. 1122+60	TO	RT. STA. 1138+25	(DOUBLE YELLOW)		3,130
LT. STA. 1138+25	TO	LT. STA. 1144+25	(YELLOW EDGELINE)		600
RT. STA. 1138+25	TO	RT. STA. 1144+25	(YELLOW EDGELINE)		600
RT. STA. 1141+15	TO	RT. STA. 1144+20	(WHITE TURN LANE)		305
LT. STA. 1145+10	TO	LT. STA. 1158+90	(YELLOW EDGELINE)		1,380
RT. STA. 1145+10	TO	RT. STA. 1158+90	(YELLOW EDGELINE)		1,380
LT. STA. 1145+15	TO	LT. STA. 1176+45	(WHITE SKIP-DASH)		790
RT. STA. 1145+15	TO	RT. STA. 1176+45	(WHITE SKIP-DASH)		790
LT. STA. 1145+15	TO	LT. STA. 1148+30	(WHITE TURN LANE)		315
LT. STA. 1145+15	TO	LT. STA. 1175+80	(WHITE EDGELINE)		3,065
RT. STA. 1145+60	TO	RT. STA. 1192+70	(WHITE EDGELINE)		4,710
LT. STA. 1158+90	TO	LT. STA. 1171+45	(DOUBLE YELLOW)		2,510
RT. STA. 1158+90	TO	RT. STA. 1171+45	(DOUBLE YELLOW)		2,510
LT. STA. 1171+45	TO	LT. STA. 1176+55	(YELLOW EDGELINE)		510
RT. STA. 1171+45	TO	RT. STA. 1176+55	(YELLOW EDGELINE)		510
RT. STA. 1173+90	TO	RT. STA. 1176+45	(WHITE TURN LANE)		255
LT. STA. 1177+20	TO	LT. STA. 1184+90	(YELLOW EDGELINE)		770
RT. STA. 1177+20	TO	RT. STA. 1184+90	(YELLOW EDGELINE)		770
LT. STA. 1177+25	TO	LT. STA. 1184+90	(WHITE SKIP-DASH)		200
RT. STA. 1177+25	TO	RT. STA. 1184+90	(WHITE SKIP-DASH)		200
LT. STA. 1178+20	TO	LT. STA. 1184+25	(WHITE EDGELINE)		605
RT. STA. 1182+65	TO	RT. STA. 1184+90	(WHITE TURN LANE)		225
LT. STA. 1185+65	TO	LT. STA. 1188+95	(YELLOW EDGELINE)		330
RT. STA. 1185+65	TO	RT. STA. 1188+95	(YELLOW EDGELINE)		330

CONTINUED

LT. STA. 1185+75	TO	LT. STA. 1198+00	(WHITE SKIP-DASH)		310
RT. STA. 1185+75	TO	RT. STA. 1198+00	(WHITE SKIP-DASH)		310
LT. STA. 1186+55	TO	LT. STA. 1188+75	(WHITE EDGELINE)		220
LT. STA. 1189+65	TO	LT. STA. 1191+30	(DOUBLE YELLOW)		330
RT. STA. 1189+65	TO	RT. STA. 1191+30	(DOUBLE YELLOW)		330
LT. STA. 1189+70	TO	LT. STA. 1191+15	(WHITE EDGELINE)		145
STA. 1191+95	TO	STA. 1194+80	(DOUBLE YELLOW)		570
LT. STA. 1191+95	TO	LT. STA. 1194+80	(DOUBLE YELLOW)		570
RT. STA. 1194+30	TO	RT. STA. 1196+85	(WHITE DOTTED)		86
STA. 1195+55	TO	STA. 1196+65	(DOUBLE YELLOW)		220
LT. STA. 1195+55	TO	LT. STA. 1196+65	(DOUBLE YELLOW)		220
STA. 1195+60	TO	STA. 1196+85	(WHITE DOTTED)		32
LT. STA. 1196+65	TO	LT. STA. 1198+00	(DOUBLE YELLOW)		270
LT. STA. 1196+85	TO	LT. STA. 1198+00	(WHITE TURN LANE)		115
RT. STA. 1196+85	TO	RT. STA. 1198+00	(WHITE TURN LANE)		115
LT. STA. 1199+20	TO	LT. STA. 1205+95	(WHITE SKIP-DASH)		170
RT. STA. 1199+20	TO	RT. STA. 1205+40	(WHITE SKIP-DASH)		160
STA. 1199+20	TO	STA. 1202+95	(DOUBLE YELLOW)		750
LT. STA. 1199+20	TO	LT. STA. 1203+00	(WHITE TURN LANE)		380
RT. STA. 1199+85	TO	RT. STA. 1202+10	(WHITE DOTTED)		58
RT. STA. 1202+10	TO	RT. STA. 1205+25	(WHITE TURN LANE)		315
STA. 1202+95	TO	STA. 1205+45	(DOUBLE YELLOW)		500
LT. STA. 1202+95	TO	LT. STA. 1205+45	(DOUBLE YELLOW)		500
LT. STA. 1205+95	TO	RT. STA. 1206+45	(WHITE DOTTED)		24
LT. STA. 1206+75	TO	LT. STA. 1300+65	(WHITE SKIP-DASH)		2,350
LT. STA. 1206+75	TO	LT. STA. 1208+70	(WHITE TURN LANE)		195
RT. STA. 1206+90	TO	RT. STA. 1300+65	(WHITE SKIP-DASH)		2,350
STA. 1206+90	TO	STA. 1216+65	(DOUBLE YELLOW)		1,950
LT. STA. 1206+90	TO	LT. STA. 1216+65	(DOUBLE YELLOW)		1,950
RT. STA. 1216+10	TO	RT. STA. 1216+90	(WHITE EDGELINE)		80
STA. 1216+65	TO	STA. 1291+20	(DOUBLE YELLOW)		14,910
RT. STA. 1217+55	TO	RT. STA. 1239+05	(WHITE EDGELINE)		2,150
LT. STA. 1217+75	TO	LT. STA. 1245+30	(WHITE EDGELINE)		2,755
RT. STA. 1239+65	TO	RT. STA. 1243+85	(WHITE EDGELINE)		420
RT. STA. 1244+35	TO	RT. STA. 1277+85	(WHITE EDGELINE)		3,350
LT. STA. 1246+10	TO	LT. STA. 1261+20	(WHITE EDGELINE)		1,510
LT. STA. 1261+90	TO	LT. STA. 1277+70	(WHITE EDGELINE)		1,580
RT. STA. 1278+65	TO	RT. STA. 1291+25	(WHITE EDGELINE)		1,260
LT. STA. 1278+70	TO	LT. STA. 1285+80	(WHITE EDGELINE)		710
LT. STA. 1286+70	TO	LT. STA. 1300+00	(WHITE EDGELINE)		1,330
LT. STA. 1291+20	TO	LT. STA. 1300+70	(YELLOW EDGELINE)		950
RT. STA. 1291+20	TO	RT. STA. 1300+70	(YELLOW EDGELINE)		950
RT. STA. 1292+30	TO	RT. STA. 1300+05	(WHITE EDGELINE)		775
RT. STA. 1297+30	TO	RT. STA. 1300+65	(WHITE TURN LANE)		335
LT. STA. 1301+05	TO	RT. STA. 1301+75	(WHITE DOTTED)		30
LT. STA. 1301+85	TO	LT. STA. 1317+70	(WHITE SKIP-DASH)		400
RT. STA. 1301+85	TO	RT. STA. 1317+90	(WHITE SKIP-DASH)		410
LT. STA. 1301+85	TO	LT. STA. 1302+75	(WHITE TURN LANE)		90
STA. 1301+90	TO	STA. 1304+65	(YELLOW EDGELINE)		275
LT. STA. 1301+90	TO	LT. STA. 1304+65	(YELLOW EDGELINE)		275
RT. STA. 1303+60	TO	RT. STA. 1304+60	(WHITE TURN LANE)		100
LT. STA. 1305+35	TO	LT. STA. 1308+20	(YELLOW EDGELINE)		285
RT. STA. 1305+35	TO	RT. STA. 1308+20	(YELLOW EDGELINE)		285
RT. STA. 1307+25	TO	RT. STA. 1308+20	(WHITE TURN LANE)		95
LT. STA. 1308+85	TO	LT. STA. 1311+25	(YELLOW EDGELINE)		240
RT. STA. 1308+85	TO	RT. STA. 1311+25	(YELLOW EDGELINE)		240
RT. STA. 1310+15	TO	RT. STA. 1311+25	(WHITE TURN LANE)		110
LT. STA. 1311+95	TO	LT. STA. 1314+55	(WHITE TURN LANE)		260
LT. STA. 1312+00	TO	LT. STA. 1317+60	(YELLOW EDGELINE)		560
RT. STA. 1312+00	TO	RT. STA. 1317+60	(YELLOW EDGELINE)		560
RT. STA. 1316+70	TO	RT. STA. 1317+85	(WHITE TURN LANE)		115
RT. STA. 1317+60	TO	RT. STA. 1317+95	(WHITE TURN LANE)		35
LT. STA. 1318+45	TO	LT. STA. 1319+00	(WHITE TURN LANE)		55
LT. STA. 1318+65	TO	LT. STA. 1327+55	(WHITE SKIP-DASH)		230
STA. 1318+75	TO	STA. 1319+85	(YELLOW EDGELINE)		110
RT. STA. 1318+75	TO	RT. STA. 1319+85	(YELLOW EDGELINE)		110
LT. STA. 1318+80	TO	LT. STA. 1319+80	(WHITE TURN LANE)		100
RT. STA. 1318+80	TO	RT. STA. 1327+55	(WHITE SKIP-DASH)		220
RT. STA. 1319+85	TO	RT. STA. 1320+40	(DOUBLE YELLOW)		110
STA. 1320+40	TO	STA. 1325+90	(YELLOW 2-WAY LT. TURN LANE)		1,380
LT. STA. 1325+90	TO	LT. STA. 1327+55	(DOUBLE YELLOW)		330
RT. STA. 1326+50	TO	RT. STA. 1327+55	(WHITE TURN LANE)		105
RT. STA. 1327+15	TO	RT. STA. 1327+55	(WHITE TURN LANE)		40
LT. STA. 1328+40	TO	LT. STA. 1353+90	(WHITE SKIP-DASH)		640
RT. STA. 1328+40	TO	RT. STA. 1354+05	(WHITE SKIP-DASH)		650
LT. STA. 1328+40	TO	LT. STA. 1328+80	(WHITE TURN LANE)		40
LT. STA. 1328+40	TO	LT. STA. 1329+40	(WHITE TURN LANE)		100
RT. STA. 1328+40	TO	RT. STA. 1332+15	(DOUBLE YELLOW)		750
LT. STA. 1330+00	TO	LT. STA. 1332+15	(DOUBLE YELLOW)		430

CONTINUED

STA. 1332+15	TO	STA. 1336+20	(DOUBLE YELLOW)		810
LT. STA. 1336+20	TO	LT. STA. 1340+55	(DOUBLE YELLOW)		870
RT. STA. 1336+20	TO	RT. STA. 1338+95	(DOUBLE YELLOW)		550
RT. STA. 1339+55	TO	RT. STA. 1340+55	(WHITE TURN LANE)		100
RT. STA. 1340+60	TO	RT. STA. 1341+15	(WHITE TURN LANE)		55
LT. STA. 1341+15	TO	LT. STA. 1341+70	(WHITE TURN LANE)		55
LT. STA. 1341+75	TO	LT. STA. 1342+75	(WHITE TURN LANE)		100
RT. STA. 1341+75	TO	RT. STA. 1345+30	(DOUBLE YELLOW)		710
LT. STA. 1343+35	TO	LT. STA. 1345+30	(DOUBLE YELLOW)		390
STA. 1345+30	TO	STA. 1349+60	(DOUBLE YELLOW)		860
LT. STA. 1349+60	TO	LT. STA. 1353+90	(DOUBLE YELLOW)		860
RT. STA. 1349+60	TO	RT. STA. 1352+35	(DOUBLE YELLOW)		550
RT. STA. 1352+95	TO	RT. STA. 1353+90	(WHITE TURN LANE)		95
RT. STA. 1353+50	TO	RT. STA. 1354+05	(WHITE TURN LANE)		55
LT. STA. 1354+70	TO	LT. STA. 1365+00	(WHITE SKIP-DASH)		260
RT. STA. 1354+70	TO	RT. STA. 1365+00	(WHITE SKIP-DASH)		260
LT. STA. 1354+70	TO	LT. STA. 1355+10	(WHITE TURN LANE)		40
LT. STA. 1354+70	TO	LT. STA. 1355+70	(WHITE TURN LANE)		100
RT. STA. 1354+70	TO	RT. STA. 1359+00	(DOUBLE YELLOW)		860
LT. STA. 1356+30	TO	LT. STA. 1359+00	(DOUBLE YELLOW)		540
STA. 1359+00	TO	STA. 1360+40	(DOUBLE YELLOW)		280
LT. STA. 1360+40	TO	LT. STA. 1363+30	(DOUBLE YELLOW)		580
RT. STA. 1360+40	TO	RT. STA. 1363+25	(DOUBLE YELLOW)		570
LT. STA. 1363+30	TO	LT. STA. 1365+00	(DOUBLE YELLOW)		340
STA. 1363+85	TO	STA. 1365+00	(WHITE TURN LANE)		115
LT. STA. 1366+05	TO	LT. STA. 1380+40	(WHITE SKIP-DASH)		360
RT. STA. 1366+05	TO	RT. STA. 1380+65	(WHITE SKIP-DASH)		370
STA. 1366+05	TO	STA. 1369+55	(DOUBLE YELLOW)		700
LT. STA. 1366+05	TO	LT. STA. 1367+35	(WHITE TURN LANE)		130
LT. STA. 1366+05	TO	LT. STA. 1367+60	(WHITE TURN LANE)		155
RT. STA. 1368+30	TO	RT. STA. 1369+55	(WHITE TURN LANE)		125
STA. 1370+45	TO	STA. 1374+05	(DOUBLE YELLOW)		720
LT. STA. 1370+45	TO	LT. STA. 1371+65	(WHITE TURN LANE)		120
RT. STA. 1372+35	TO	RT. STA. 1374+05	(WHITE TURN LANE)		170
RT. STA. 1373+55	TO	RT. STA. 1374+05	(WHITE TURN LANE)		50
STA. 1374+45	TO	STA. 1380+40	(YELLOW EDGELINE)		595
LT. STA. 1374+45	TO	LT. STA. 1380+40	(YELLOW EDGELINE)		595
LT. STA. 1374+50	TO	LT. STA. 1376+10	(WHITE TURN LANE)		160
RT. STA. 1376+90	TO	RT. STA. 1380+65	(WHITE TURN LANE)		375
STA. 1378+40	TO	STA. 1380+40	(WHITE SKIP-DASH)		50
LT. STA. 1381+55	TO	LT. STA. 1385+25	(WHITE SKIP-DASH)		100
LT. STA. 1381+55	TO	LT. STA. 1385+30	(WHITE TURN LANE)		375
STA. 1381+65	TO	STA. 1385+25	(YELLOW EDGELINE)		360
RT. STA. 1381+65	TO	RT. STA. 1385+25	(YELLOW EDGELINE)		360
LT. STA. 1381+70	TO	LT. STA. 1383+80	(WHITE SKIP-DASH)		60
RT. STA. 1381+70	TO	RT. STA. 1385+25	(WHITE SKIP-DASH)		90
TOTAL =					172,185

THERMOPLASTIC PAVEMENT MARKING - LINE 8"

LOCATION	FOOT
IL 111 (N KINGSHIGHWAY):	
NE QUADRANT (WHITE PAINTED ISLAND)	173
NW QUADRANT (WHITE PAINTED ISLAND)	107
SE QUADRANT (WHITE PAINTED ISLAND)	107
SW QUADRANT (WHITE PAINTED ISLAND)	88
TOTAL =	475

THERMOPLASTIC PAVEMENT MARKING - LINE 12"

LOCATION/DESCRIPTION	FOOT
STA. 993+95 (WHITE CROSSWALK)	115
STA. 1033+30 TO STA. 1036+30 (YELLOW DIAGONAL)	67
STA. 1039+45 TO STA. 1044+85 (YELLOW DIAGONAL)	105
LT. STA. 1049+65 TO LT. STA. 1049+95 (WHITE CROSSWALK)	49
RT. STA. 1049+83 TO RT. STA. 1050+00 (WHITE CROSSWALK)	34
LT. STA. 1049+90 TO LT. STA. 1050+05 (WHITE CHEVRON)	20
RT. STA. 1049+90 TO RT. STA. 1050+05 (WHITE CHEVRON)	20
LT. STA. 1050+03 TO LT. STA. 1050+70 (WHITE CROSSWALK)	134
RT. STA. 1050+08 TO RT. STA. 1050+75 (WHITE CROSSWALK)	134
RT. STA. 1050+75 TO RT. STA. 1050+90 (WHITE CHEVRON)	20
LT. STA. 1050+83 TO LT. STA. 1051+00 (WHITE CROSSWALK)	34
RT. STA. 1050+90 TO RT. STA. 1051+05 (WHITE CROSSWALK)	34
LT. STA. 1050+90 TO LT. STA. 1051+10 (WHITE CHEVRON)	25
STA. 1067+95 TO STA. 1076+60 (YELLOW DIAGONAL)	343
STA. 1116+60 TO STA. 1121+45 (YELLOW DIAGONAL)	110
STA. 1122+65 TO STA. 1138+15 (YELLOW DIAGONAL)	577
STA. 1159+00 TO STA. 1171+35 (YELLOW DIAGONAL)	466
STA. 1189+80 TO STA. 1191+25 (YELLOW DIAGONAL)	48
STA. 1192+05 TO STA. 1194+65 (YELLOW DIAGONAL)	64
STA. 1195+80 TO STA. 1196+35 (YELLOW DIAGONAL)	17
STA. 1199+15 (WHITE CROSSWALK)	148
STA. 1203+25 TO STA. 1205+25 (YELLOW DIAGONAL)	67
STA. 1206+95 TO STA. 1216+25 (YELLOW DIAGONAL)	311
STA. 1300+75 (WHITE CROSSWALK)	203
STA. 1301+75 (WHITE CROSSWALK)	210
STA. 1317+85 (WHITE CROSSWALK)	186
STA. 1328+30 (WHITE CROSSWALK)	158
STA. 1354+60 (WHITE CROSSWALK)	162
STA. 1365+10 (WHITE CROSSWALK)	145
STA. 1381+45 (WHITE CROSSWALK)	157
STA. 1300+00 TO STA. 1331+90 (YELLOW DIAGONAL)	100
STA. 1336+40 TO STA. 1338+85 (YELLOW DIAGONAL)	115
STA. 1343+45 TO STA. 1344+95 (YELLOW DIAGONAL)	93
STA. 1350+45 TO STA. 1352+25 (YELLOW DIAGONAL)	104
STA. 1356+40 TO STA. 1357+90 (YELLOW DIAGONAL)	91
STA. 1360+80 TO STA. 1363+20 (YELLOW DIAGONAL)	95
TOTAL =	4,761

THERMOPLASTIC PAVEMENT MARKING - LINE 24"

LOCATION/DESCRIPTION	FOOT
RT. STA. 993+85 (WHITE STOP BAR)	25
LT. STA. 994+70 (WHITE STOP BAR)	38
RT. STA. 1028+75 (WHITE RAILROAD CROSSING)	22
RT. STA. 1029+25 (WHITE RAILROAD CROSSING)	22
RT. STA. 1031+50 (WHITE STOP BAR)	22
LT. STA. 1032+40 (WHITE STOP BAR)	23
LT. STA. 1034+65 (WHITE RAILROAD CROSSING)	23
LT. STA. 1035+15 (WHITE RAILROAD CROSSING)	23
RT. STA. 1049+90 (WHITE STOP BAR)	35
LT. STA. 1050+90 (WHITE STOP BAR)	35
RT. STA. 1144+20 (WHITE STOP BAR)	24
LT. STA. 1145+15 (WHITE STOP BAR)	22
RT. STA. 1176+45 (WHITE STOP BAR)	35
LT. STA. 1177+25 (WHITE STOP BAR)	23
RT. STA. 1184+90 (WHITE STOP BAR)	36
LT. STA. 1185+75 (WHITE STOP BAR)	22
RT. STA. 1198+00 (WHITE STOP BAR)	51
LT. STA. 1199+20 (WHITE STOP BAR)	36
RT. STA. 1205+40 (WHITE STOP BAR)	24
LT. STA. 1206+75 (WHITE STOP BAR)	24
LT. STA. 1206+90 (WHITE STOP BAR)	12
RT. STA. 1300+65 (WHITE STOP BAR)	36
LT. STA. 1301+85 (WHITE STOP BAR)	35
RT. STA. 1317+55 (WHITE STOP BAR)	12
RT. STA. 1317+85 (WHITE STOP BAR)	12
RT. STA. 1317+90 (WHITE STOP BAR)	12
RT. STA. 1317+95 (WHITE STOP BAR)	12
LT. STA. 1318+45 (WHITE STOP BAR)	12
LT. STA. 1318+65 (WHITE STOP BAR)	12
LT. STA. 1318+80 (WHITE STOP BAR)	25
RT. STA. 1327+55 (WHITE STOP BAR)	50
LT. STA. 1328+40 (WHITE STOP BAR)	50
STA. 1353+90 (WHITE STOP BAR)	12
RT. STA. 1354+05 (WHITE STOP BAR)	36
LT. STA. 1354+70 (WHITE STOP BAR)	49
RT. STA. 1365+00 (WHITE STOP BAR)	36
LT. STA. 1366+05 (WHITE STOP BAR)	45
LT. STA. 1380+40 (WHITE STOP BAR)	22
RT. STA. 1380+65 (WHITE STOP BAR)	24
LT. STA. 1381+55 (WHITE STOP BAR)	24
LT. STA. 1381+70 (WHITE STOP BAR)	25
IL 111 (N KINGSHIGHWAY):	
NE QUADRANT (WHITE STOP BAR)	17
SE QUADRANT (WHITE STOP BAR)	51
SW QUADRANT (WHITE STOP BAR)	17
TOTAL =	1,203

RAISED REFLECTIVE PAVEMENT MARKER

LOCATION/DESCRIPTION	EACH
LT. STA. 980+00 To LT. STA. 993+85 1-WAY CRYSTAL	18
RT. STA. 980+00 To RT. STA. 993+85 1-WAY CRYSTAL	18
LT. STA. 994+70 To LT. STA. 1050+00 1-WAY CRYSTAL	70
RT. STA. 994+70 To RT. STA. 1050+00 1-WAY CRYSTAL	70
STA. 980+30 To STA. 993+85 2-WAY AMBER	17
STA. 994+70 To STA. 1000+00 2-WAY AMBER	7
STA. 1014+95 To STA. 1032+65 2-WAY AMBER	23
LT. STA. 1032+65 To LT. STA. 1036+55 1-WAY AMBER	10
RT. STA. 1032+65 To RT. STA. 1036+55 1-WAY AMBER	10
LT. STA. 1037+70 To LT. STA. 1038+85 1-WAY CRYSTAL	3
STA. 1037+70 To STA. 1039+05 2-WAY AMBER	2
LT. STA. 1039+05 To LT. STA. 1045+05 1-WAY AMBER	16
RT. STA. 1039+05 To RT. STA. 1041+85 1-WAY AMBER	8
RT. STA. 1048+20 To RT. STA. 1049+90 1-WAY CRYSTAL	5
STA. 1050+90 To STA. 1052+60 1-WAY CRYSTAL	5
LT. STA. 1050+90 To LT. STA. 1144+20 1-WAY CRYSTAL	117
RT. STA. 1050+90 To RT. STA. 1144+20 1-WAY CRYSTAL	117
LT. STA. 1051+30 To LT. STA. 1056+10 1-WAY CRYSTAL	13
LT. STA. 1067+90 To LT. STA. 1076+65 1-WAY AMBER	11
RT. STA. 1067+90 To RT. STA. 1076+65 1-WAY AMBER	11
RT. STA. 1078+95 To RT. STA. 1080+75 1-WAY CRYSTAL	5
RT. STA. 1112+55 To RT. STA. 1115+65 1-WAY CRYSTAL	8
LT. STA. 1116+60 To LT. STA. 1122+60 1-WAY AMBER	8
LT. STA. 1122+60 To LT. STA. 1138+25 1-WAY AMBER	20
RT. STA. 1122+60 To RT. STA. 1138+25 1-WAY AMBER	20
RT. STA. 1141+15 To RT. STA. 1144+20 1-WAY CRYSTAL	8
LT. STA. 1145+15 To LT. STA. 1148+30 1-WAY CRYSTAL	8
LT. STA. 1145+15 To LT. STA. 1176+45 1-WAY CRYSTAL	40
RT. STA. 1145+15 To RT. STA. 1176+45 1-WAY CRYSTAL	40
LT. STA. 1158+90 To LT. STA. 1171+45 1-WAY AMBER	16
RT. STA. 1158+90 To RT. STA. 1171+45 1-WAY AMBER	16
RT. STA. 1173+90 To RT. STA. 1176+45 1-WAY CRYSTAL	7
LT. STA. 1177+25 To LT. STA. 1184+90 1-WAY CRYSTAL	10
RT. STA. 1177+25 To RT. STA. 1184+90 1-WAY CRYSTAL	10
RT. STA. 1182+65 To RT. STA. 1184+90 1-WAY CRYSTAL	6
LT. STA. 1185+75 To LT. STA. 1198+00 1-WAY CRYSTAL	16
RT. STA. 1185+75 To RT. STA. 1198+00 1-WAY CRYSTAL	16
LT. STA. 1189+65 To LT. STA. 1191+30 1-WAY AMBER	5
RT. STA. 1189+65 To RT. STA. 1191+30 1-WAY AMBER	5
STA. 1191+95 To STA. 1194+80 1-WAY AMBER	8
LT. STA. 1191+95 To LT. STA. 1194+80 1-WAY AMBER	8
STA. 1195+55 To STA. 1196+65 1-WAY AMBER	3
LT. STA. 1195+55 To LT. STA. 1196+65 1-WAY AMBER	3
LT. STA. 1196+65 To LT. STA. 1198+00 2-WAY AMBER	2
LT. STA. 1196+85 To LT. STA. 1198+00 1-WAY CRYSTAL	3
RT. STA. 1196+85 To RT. STA. 1198+00 1-WAY CRYSTAL	3
LT. STA. 1199+20 To LT. STA. 1203+00 1-WAY CRYSTAL	10
LT. STA. 1199+20 To LT. STA. 1205+95 1-WAY CRYSTAL	9
RT. STA. 1199+20 To RT. STA. 1205+40 1-WAY CRYSTAL	8
STA. 1199+20 To STA. 1202+95 2-WAY AMBER	5
RT. STA. 1202+10 To RT. STA. 1205+25 1-WAY CRYSTAL	8
STA. 1202+95 To STA. 1205+45 1-WAY AMBER	7
LT. STA. 1202+95 To LT. STA. 1205+45 1-WAY AMBER	7
LT. STA. 1206+75 To LT. STA. 1208+70 1-WAY CRYSTAL	5
LT. STA. 1206+75 To LT. STA. 1300+65 1-WAY CRYSTAL	118
RT. STA. 1206+90 To RT. STA. 1300+65 1-WAY CRYSTAL	118
STA. 1206+90 To STA. 1216+65 1-WAY AMBER	25
LT. STA. 1206+90 To LT. STA. 1216+65 1-WAY AMBER	25
STA. 1216+65 To STA. 1291+20 2-WAY AMBER	188
RT. STA. 1297+30 To RT. STA. 1300+65 1-WAY CRYSTAL	9
LT. STA. 1301+85 To LT. STA. 1302+75 1-WAY CRYSTAL	3
LT. STA. 1301+85 To LT. STA. 1317+70 1-WAY CRYSTAL	20
RT. STA. 1301+85 To RT. STA. 1317+90 1-WAY CRYSTAL	21
RT. STA. 1303+60 To RT. STA. 1304+60 1-WAY CRYSTAL	3
RT. STA. 1307+25 To RT. STA. 1308+20 1-WAY CRYSTAL	3
RT. STA. 1310+15 To RT. STA. 1311+25 1-WAY CRYSTAL	3
LT. STA. 1311+95 To LT. STA. 1314+55 1-WAY CRYSTAL	7
RT. STA. 1316+70 To RT. STA. 1317+85 1-WAY CRYSTAL	3
RT. STA. 1317+60 To RT. STA. 1317+95 1-WAY CRYSTAL	2
LT. STA. 1318+45 To LT. STA. 1319+00 1-WAY CRYSTAL	2
LT. STA. 1318+80 To LT. STA. 1319+80 1-WAY CRYSTAL	3
LT. STA. 1318+65 To LT. STA. 1327+55 1-WAY CRYSTAL	12
RT. STA. 1318+80 To RT. STA. 1327+55 1-WAY CRYSTAL	11
RT. STA. 1319+85 To RT. STA. 1320+40 2-WAY AMBER	2
LT. STA. 1320+40 To LT. STA. 1325+90 2-WAY AMBER	14
RT. STA. 1320+41 To RT. STA. 1325+91 2-WAY AMBER	14

CONTINUED

LT. STA. 1325+90 To LT. STA. 1327+55 2-WAY AMBER	5
RT. STA. 1326+50 To RT. STA. 1327+55 1-WAY CRYSTAL	3
RT. STA. 1327+15 To RT. STA. 1327+55 1-WAY CRYSTAL	2
LT. STA. 1328+40 To LT. STA. 1328+80 1-WAY CRYSTAL	2
LT. STA. 1328+40 To LT. STA. 1329+40 1-WAY CRYSTAL	3
LT. STA. 1328+40 To LT. STA. 1353+90 1-WAY CRYSTAL	32
RT. STA. 1328+40 To RT. STA. 1354+05 1-WAY CRYSTAL	33
RT. STA. 1328+40 To RT. STA. 1330+00 2-WAY AMBER	5
LT. STA. 1330+00 To LT. STA. 1332+15 1-WAY AMBER	6
RT. STA. 1330+00 To RT. STA. 1332+15 1-WAY AMBER	6
STA. 1332+15 To STA. 1336+20 2-WAY AMBER	6
LT. STA. 1336+20 To LT. STA. 1338+95 1-WAY AMBER	7
RT. STA. 1336+20 To RT. STA. 1338+95 1-WAY AMBER	7
RT. STA. 1338+95 To RT. STA. 1340+55 2-WAY AMBER	5
RT. STA. 1339+55 To RT. STA. 1340+55 1-WAY CRYSTAL	3
RT. STA. 1340+60 To RT. STA. 1341+15 1-WAY CRYSTAL	2
LT. STA. 1341+15 To LT. STA. 1341+70 1-WAY CRYSTAL	2
LT. STA. 1341+75 To LT. STA. 1342+75 1-WAY CRYSTAL	3
RT. STA. 1341+75 To RT. STA. 1343+45 2-WAY AMBER	5
LT. STA. 1343+45 To LT. STA. 1345+30 1-WAY AMBER	5
RT. STA. 1343+45 To RT. STA. 1345+30 1-WAY AMBER	5
STA. 1345+30 To STA. 1349+60 2-WAY AMBER	6
LT. STA. 1349+60 To LT. STA. 1352+20 1-WAY AMBER	7
RT. STA. 1349+60 To RT. STA. 1352+20 1-WAY AMBER	7
LT. STA. 1352+20 To LT. STA. 1353+90 2-WAY AMBER	5
RT. STA. 1352+95 To RT. STA. 1353+90 1-WAY CRYSTAL	3
RT. STA. 1353+50 To RT. STA. 1354+05 1-WAY CRYSTAL	2
LT. STA. 1354+70 To LT. STA. 1355+10 1-WAY CRYSTAL	2
LT. STA. 1354+70 To LT. STA. 1355+70 1-WAY CRYSTAL	3
LT. STA. 1354+70 To LT. STA. 1365+00 1-WAY CRYSTAL	13
RT. STA. 1354+70 To RT. STA. 1365+00 1-WAY CRYSTAL	13
RT. STA. 1354+70 To RT. STA. 1356+30 2-WAY AMBER	5
LT. STA. 1356+30 To LT. STA. 1359+00 1-WAY AMBER	7
RT. STA. 1356+30 To RT. STA. 1359+00 1-WAY AMBER	7
STA. 1359+00 To STA. 1360+40 2-WAY AMBER	4
LT. STA. 1360+40 To LT. STA. 1363+30 1-WAY AMBER	8
RT. STA. 1360+40 To RT. STA. 1363+30 1-WAY AMBER	8
LT. STA. 1363+30 To LT. STA. 1365+00 2-WAY AMBER	5
STA. 1363+85 To STA. 1365+00 1-WAY CRYSTAL	3
LT. STA. 1366+05 To LT. STA. 1367+35 1-WAY CRYSTAL	4
LT. STA. 1366+05 To LT. STA. 1367+60 1-WAY CRYSTAL	4
LT. STA. 1366+05 To LT. STA. 1380+40 1-WAY CRYSTAL	18
RT. STA. 1366+05 To RT. STA. 1380+65 1-WAY CRYSTAL	19
STA. 1366+05 To STA. 1369+55 2-WAY AMBER	9
RT. STA. 1368+30 To RT. STA. 1369+55 1-WAY CRYSTAL	4
LT. STA. 1370+45 To LT. STA. 1371+65 1-WAY CRYSTAL	4
STA. 1370+45 To STA. 1374+05 2-WAY AMBER	10
RT. STA. 1372+35 To RT. STA. 1374+05 1-WAY CRYSTAL	5
RT. STA. 1373+55 To RT. STA. 1374+05 1-WAY CRYSTAL	2
LT. STA. 1374+50 To LT. STA. 1376+10 1-WAY CRYSTAL	5
RT. STA. 1376+90 To RT. STA. 1380+65 1-WAY CRYSTAL	10
STA. 1378+40 To STA. 1380+40 1-WAY CRYSTAL	3
LT. STA. 1381+55 To LT. STA. 1385+25 1-WAY CRYSTAL	5
LT. STA. 1381+55 To LT. STA. 1385+30 1-WAY CRYSTAL	10
LT. STA. 1381+70 To LT. STA. 1383+80 1-WAY CRYSTAL	3
RT. STA. 1381+70 To RT. STA. 1385+25 1-WAY CRYSTAL	5
TOTALS =	1,885

SIGN PANEL, TYPE 1
TELESCOPING STEEL SIGN SUPPORT
BASE FOR TELESCOPING STEEL SIGN SUPPORT

* LOCATION	SIGN PANEL, TYPE 1 (SQ. FT.)	TELESCOPING STEEL SIGN SUPPORT (FOOT)	BASE FOR TELESCOPING STEEL SIGN (EACH)
STA. 1001+05	5	10	1
STA. 1013+50	5	10	1
STA. 1067+90	5	15	
STA. 1076+60	5	10	1
STA. 1080+80	5	10	1
STA. 1081+35	5	10	1
STA. 1115+60	5	10	1
STA. 1116+65	5	10	1
STA. 1122+60	5	10	1
STA. 1138+25	5	10	1
STA. 1158+90	5	15	
STA. 1171+45	5	10	1
STA. 1188+85	5	10	1
STA. 1300+60	5	10	1
STA. 1301+95	5	10	1
STA. 1304+55	5	10	1
STA. 1308+10	5	10	1
STA. 1311+15	5	10	1
STA. 1312+05	5	10	1
STA. 1317+55	5	10	1
STA. 1318+80	5	10	1
STA. 1374+55	5	10	1
STA. 1380+30	5	10	1
STA. 1381+70	5	10	1
TOTALS =	120	250	22

* ENGINEER TO DETERMINE FINAL SIGN LOCATIONS.
(SEE PAVEMENT MARKING DETAIL SHEETS FOR APPROXIMATE LOCATIONS)

PRISMATIC CURB REFLECTOR

LOCATION				EACH
STA. 1001+00	TO	STA. 1014+05	AMBER	66
STA. 1041+85	TO	STA. 1049+90	AMBER	42
STA. 1050+90	TO	STA. 1056+40	AMBER	28
STA. 1076+70	TO	STA. 1080+90	AMBER	22
STA. 1081+30	TO	STA. 1083+65	AMBER	12
STA. 1109+58	TO	STA. 1115+70	AMBER	32
STA. 1116+60	TO	STA. 1122+70	AMBER	32
STA. 1138+15	TO	STA. 1144+26	AMBER	32
STA. 1145+10	TO	STA. 1151+30	AMBER	32
STA. 1171+35	TO	STA. 1176+55	AMBER	28
STA. 1177+20	TO	STA. 1184+90	AMBER	40
STA. 1185+65	TO	STA. 1188+90	AMBER	18
STA. 1299+65	TO	STA. 1300+70	AMBER	6
STA. 1301+90	TO	STA. 1302+75	AMBER	6
STA. 1303+55	TO	STA. 1304+60	AMBER	6
STA. 1307+00	TO	STA. 1308+20	AMBER	8
STA. 1310+15	TO	STA. 1311+22	AMBER	6
STA. 1312+00	TO	STA. 1313+00	AMBER	6
STA. 1316+60	TO	STA. 1317+62	AMBER	6
STA. 1318+75	TO	STA. 1319+82	AMBER	6
STA. 1374+48	TO	STA. 1380+36	AMBER	30
STA. 1381+67	TO	STA. 1385+25	AMBER	18
TOTAL =				482

GRADING AND SHAPING SHOULDERS

LOCATION	UNIT
STA. 1081+85 TO STA. 1095+00 LT	13.15
STA. 1095+00 TO STA. 1102+60 LT	7.6
STA. 1103+30 TO STA. 1110+00 LT	6.7
STA. 1110+00 TO STA. 1113+80 LT	3.8
TOTAL =	32

1 UNIT = 100 LIN. FT.

PORTLAND CEMENT CONCRETE SURFACE REMOVAL (VARIABLE DEPTH)

LOCATION	SQ. YD.
LT. STA. 1007+10 TO LT. STA. 1010+25	770
RT. STA. 1007+40 TO RT. STA. 1009+50	513
TOTAL =	1,283

ISLAND REMOVAL

LOCATION	SQ. FT.
STA. 1050+00 30' LT	133
STA. 1050+00 44' RT	72
STA. 1050+80 34' LT	266
STA. 1050+80 46' RT	137
STA. 1098+90 12' RT	191
TOTAL =	799

PAINT PAVEMENT MARKING - RAISED MEDIAN

LOCATION (PAINTING MEDIAN NOSES)	SQ. FT.
STA. 1001+00	20
STA. 1013+85	20
STA. 1041+87	20
STA. 1049+80	20
STA. 1050+90	20
STA. 1058+05	20
STA. 1058+95	30
STA. 1065+00	110
STA. 1065+30	130
STA. 1068+00	110
STA. 1076+70	150
STA. 1080+90	20
STA. 1081+30	120
STA. 1083+65	60
STA. 1109+58	300
STA. 1115+70	20
STA. 1116+60	20
STA. 1122+70	150
STA. 1138+15	150
STA. 1144+26	40
STA. 1145+10	30
STA. 1159+00	130
STA. 1171+35	150
STA. 1176+55	20
STA. 1177+20	40
STA. 1184+90	20
STA. 1185+65	35
STA. 1188+90	30
STA. 1300+70	30
STA. 1301+90	30
STA. 1304+60	30
STA. 1308+20	30
STA. 1311+20	30
STA. 1312+00	30
STA. 1317+60	30
STA. 1318+75	30
STA. 1374+50	30
STA. 1380+35	30
STA. 1381+65	30
TOTAL =	2,315

PAINT PAVEMENT MARKING CURB

LOCATION			FOOT
RT. STA. 1001+00	TO	RT. STA. 1001+64	48
LT. STA. 1013+21	TO	LT. STA. 1013+85	48
RT. STA. 1041+87	TO	RT. STA. 1042+51	48
LT. STA. 1049+21	TO	LT. STA. 1049+85	48
RT. STA. 1050+90	TO	RT. STA. 1051+54	48
LT. STA. 1057+41	TO	LT. STA. 1058+05	48
RT. STA. 1058+95	TO	RT. STA. 1059+59	48
LT. STA. 1064+36	TO	LT. STA. 1065+00	48
RT. STA. 1065+30	TO	RT. STA. 1065+94	48
LT. STA. 1067+36	TO	LT. STA. 1068+00	48
RT. STA. 1076+70	TO	RT. STA. 1077+34	48
LT. STA. 1080+26	TO	LT. STA. 1080+90	48
RT. STA. 1081+30	TO	RT. STA. 1081+94	48
LT. STA. 1083+01	TO	LT. STA. 1083+65	48
RT. STA. 1109+58	TO	RT. STA. 1110+22	48
LT. STA. 1115+06	TO	LT. STA. 1115+70	48
RT. STA. 1116+60	TO	RT. STA. 1117+24	48
LT. STA. 1122+06	TO	LT. STA. 1122+70	48
RT. STA. 1138+15	TO	RT. STA. 1138+79	48
LT. STA. 1143+62	TO	LT. STA. 1144+26	48
RT. STA. 1145+10	TO	RT. STA. 1145+74	48
RT. STA. 1171+35	TO	RT. STA. 1171+99	48
LT. STA. 1175+91	TO	LT. STA. 1176+55	48
RT. STA. 1177+20	TO	RT. STA. 1177+84	48
LT. STA. 1184+26	TO	LT. STA. 1184+90	48
RT. STA. 1185+65	TO	RT. STA. 1186+29	48
LT. STA. 1188+26	TO	LT. STA. 1188+90	48
LT. STA. 1300+06	TO	LT. STA. 1300+70	48
RT. STA. 1301+90	TO	RT. STA. 1302+54	48
LT. STA. 1303+96	TO	LT. STA. 1304+60	48
LT. STA. 1307+56	TO	LT. STA. 1308+20	48
LT. STA. 1310+56	TO	LT. STA. 1311+20	48
RT. STA. 1312+00	TO	RT. STA. 1312+64	48
LT. STA. 1316+96	TO	LT. STA. 1317+60	48
RT. STA. 1318+75	TO	RT. STA. 1319+39	48
RT. STA. 1374+50	TO	RT. STA. 1375+14	48
LT. STA. 1379+71	TO	LT. STA. 1380+35	48
RT. STA. 1381+65	TO	RT. STA. 1382+29	48
TOTAL =			1,824

LEGEND

MILLING AND RESURFACING LIMITS

REMOVAL ITEMS

PROP. CURVE C10
PI STA. = 990+60.76
Δ = 5° 44′ 00″ (LT)
D = 0° 34′ 00″
R = 10,111.10′
T = 506.30′
L = 1,011.76′
E = 12.67′
θ = -----
T.R. = -----
S.E. RUN = ----
P.C. STA. = 985+54.46
P.T. STA. = 995+66.22

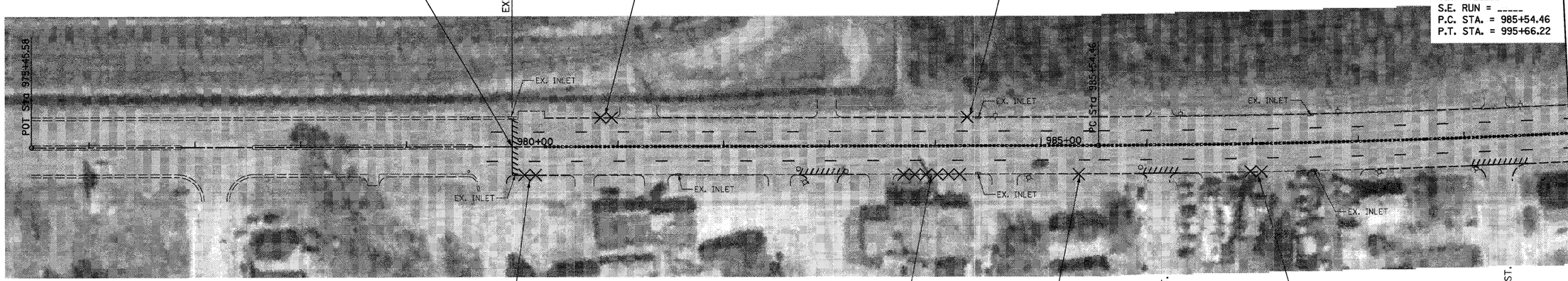

BEGIN PROJECT STA. 980+00

LT. STA. 980+79 TO LT. STA. 980+97
REMOVE CURB (TY. B)

LT. STA. 984+28 TO LT. STA. 984+33
REMOVE CURB (TY. B)

RT. STA. 980+06 TO RT. STA. 980+21
REMOVE CURB (TY. B)

RT. STA. 983+65 TO RT. STA. 984+25
REMOVE CURB (TY. B)

RT. STA. 985+34 TO RT. STA. 985+38
REMOVE CURB (TY. B)

RT. STA. 986+93 TO RT. STA. 987+11
REMOVE CURB (TY. B)

EXISTING & REMOVAL ITEMS

BEGIN PROJECT STA. 980+00

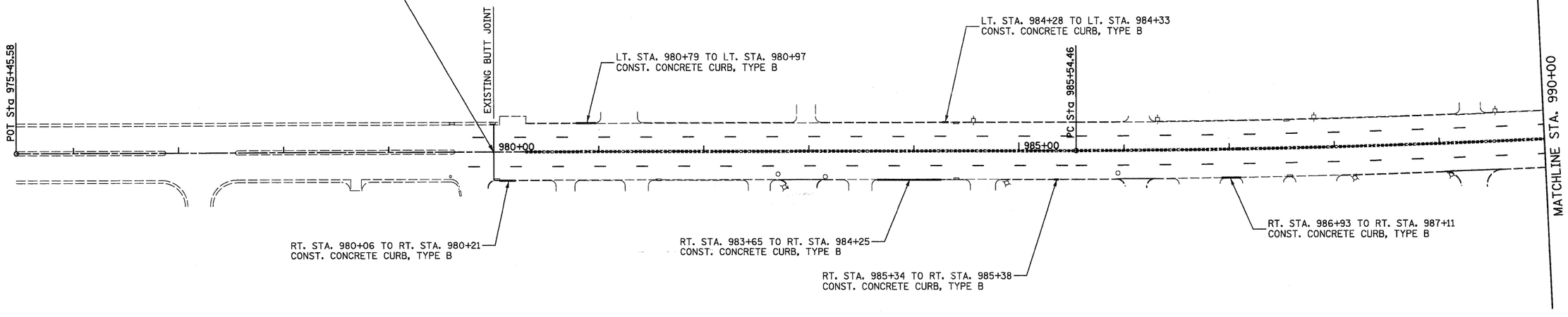

LT. STA. 980+79 TO LT. STA. 980+97
CONST. CONCRETE CURB, TYPE B

LT. STA. 984+28 TO LT. STA. 984+33
CONST. CONCRETE CURB, TYPE B

RT. STA. 980+06 TO RT. STA. 980+21
CONST. CONCRETE CURB, TYPE B

RT. STA. 983+65 TO RT. STA. 984+25
CONST. CONCRETE CURB, TYPE B

RT. STA. 985+34 TO RT. STA. 985+38
CONST. CONCRETE CURB, TYPE B

RT. STA. 986+93 TO RT. STA. 987+11
CONST. CONCRETE CURB, TYPE B

50 0 50 100
SCALE IN FEET

PROPOSED IMPROVEMENTS

FILE NAME = ...\Cadd\D876D96-sht-plan01.dgn	USER NAME = SJS	DESIGNED -	REVISED -	STATE OF ILLINOIS DEPARTMENT OF TRANSPORTATION
Johnson, Depp & Quisenberry CONSULTING ENGINEERS Springfield, Illinois		DRAWN -	REVISED -	
	PLOT SCALE = 50.0000 ' / IN.	CHECKED -	REVISED -	
	PLOT DATE = 12/15/2010 09:35:45	DATE -	REVISED -	

ST. CLAIR AVE./LINCOLN TRAIL PLAN SHEET

SCALE: | SHEET NO. OF SHEETS | STA. 975+45.58 TO STA. 990+00.00

F.A.U. RTE.	SECTION	COUNTY	TOTAL SHEETS	SHEET NO.
9166	34-1RS-3	ST. CLAIR	87	28
		CONTRACT NO. 76D96		
	ILLINOIS	FED. AID PROJECT		

PROP. CURVE C10
PI STA. = 990+60.76
Δ = 5° 44′ 00″ (LT)
D = 0° 34′ 00″
R = 10,111.10′
T = 506.30′
L = 1,011.76′
E = 12.67′
e = -----
T.R. = -----
S.E. RUN = -----
P.C. STA. = 985+54.46
P.T. STA. = 995+66.22

LEGEND
MILLING AND RESURFACING LIMITS
REMOVAL ITEMS

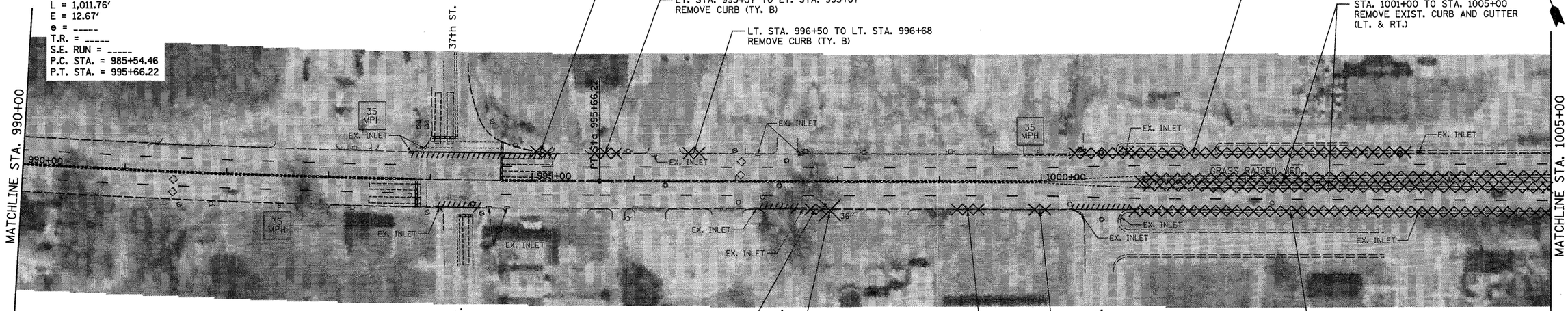

LT. STA. 994+99 TO LT. STA. 995+16
REMOVE CURB (TY. B)

LT. STA. 995+57 TO LT. STA. 995+87
REMOVE CURB (TY. B)

LT. STA. 996+50 TO LT. STA. 996+68
REMOVE CURB (TY. B)

LT. STA. 1000+28 TO LT. STA. 1003+68
REMOVE EXIST. CURB AND GUTTER

STA. 1001+00 TO STA. 1005+00
REMOVE EXIST. CURB AND GUTTER
(LT. & RT.)

RT. STA. 997+69 TO RT. STA. 997+89
REMOVE CURB (TY. B)

RT. STA. 997+92
TREE REMOVAL (OVER 15 UNITS DIA.)

RT. STA. 999+15 TO RT. STA. 999+40
REMOVE CURB (TY. B)

RT. STA. 999+91 TO RT. STA. 1000+05
REMOVE CURB (TY. B)

RT. STA. 1000+87 TO RT. STA. 1005+00
REMOVE EXIST. CURB AND GUTTER

EXISTING & REMOVAL ITEMS

SEE DETECTOR LOOP
REPLACEMENT PLANS
FOR ADDITIONAL DETAILS

FRAMES AND GRATES, TYPE 3
LT. STA. 1000+83
RT. STA. 1003+70

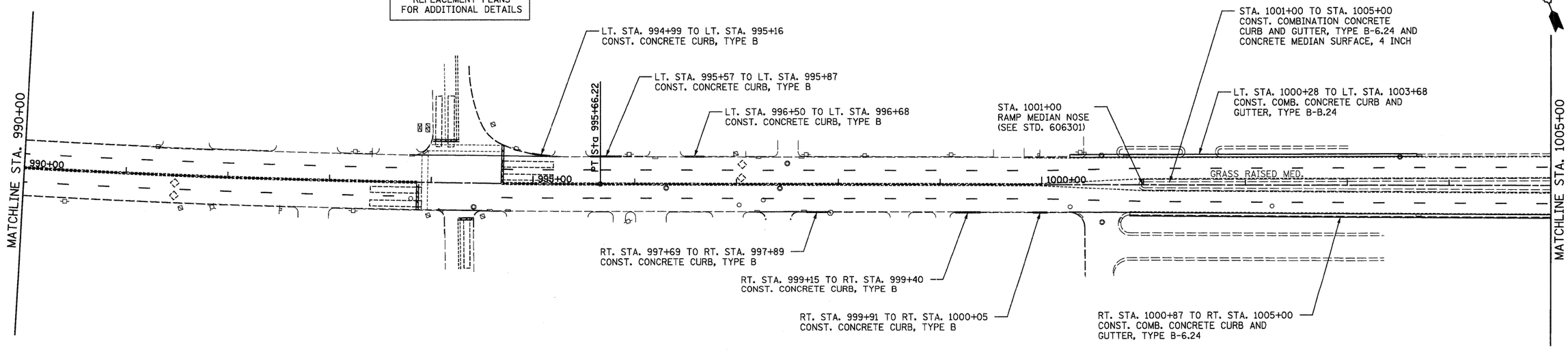

LT. STA. 994+99 TO LT. STA. 995+16
CONST. CONCRETE CURB, TYPE B

LT. STA. 995+57 TO LT. STA. 995+87
CONST. CONCRETE CURB, TYPE B

LT. STA. 996+50 TO LT. STA. 996+68
CONST. CONCRETE CURB, TYPE B

STA. 1001+00
RAMP MEDIAN NOSE
(SEE STD. 606301)

STA. 1001+00 TO STA. 1005+00
CONST. COMBINATION CONCRETE
CURB AND GUTTER, TYPE B-6.24 AND
CONCRETE MEDIAN SURFACE, 4 INCH

LT. STA. 1000+28 TO LT. STA. 1003+68
CONST. COMB. CONCRETE CURB AND
GUTTER, TYPE B-B.24

RT. STA. 997+69 TO RT. STA. 997+89
CONST. CONCRETE CURB, TYPE B

RT. STA. 999+15 TO RT. STA. 999+40
CONST. CONCRETE CURB, TYPE B

RT. STA. 999+91 TO RT. STA. 1000+05
CONST. CONCRETE CURB, TYPE B

RT. STA. 1000+87 TO RT. STA. 1005+00
CONST. COMB. CONCRETE CURB AND
GUTTER, TYPE B-6.24

50 0 50 100
SCALE IN FEET

PROPOSED IMPROVEMENTS

FILE NAME = ...\oadd\D876D96-sht-plan02.dgn	USER NAME = SJS	DESIGNED -	REVISED -	STATE OF ILLINOIS DEPARTMENT OF TRANSPORTATION	ST. CLAIR AVE./LINCOLN TRAIL PLAN SHEET	F.A.U. RTE.	SECTION	COUNTY	TOTAL SHEETS / SHEET NO.
		DRAWN -	REVISED -			9166	34-1RS-3	ST. CLAIR	87 / 29
Johnson, Depp & Quisenberry CONSULTING ENGINEERS Springfield, Illinois	PLOT SCALE = 50.0000 ′ / IN.	CHECKED -	REVISED -					CONTRACT NO. 76D96	
	PLOT DATE = 12/15/2010 09:35:52	DATE -	REVISED -		SCALE: SHEET NO. OF SHEETS STA. 990+00.00 TO STA. 1005+00.00		ILLINOIS	FED. AID PROJECT	

LEGEND

MILLING AND RESURFACING LIMITS

REMOVAL ITEMS

PROP. CURVE C11
PI STA. = 1022+59.24
Δ = 36° 48′ 01″ (LT)
D = 3° 17′ 58″
R = 1,736.48′
T = 577.66′
L = 1,115.32′
E = 93.56′
e = -----
T.R. = -----
S.E. RUN = -----
P.C. STA. = 1016+81.59
P.T. STA. = 1027+96.91

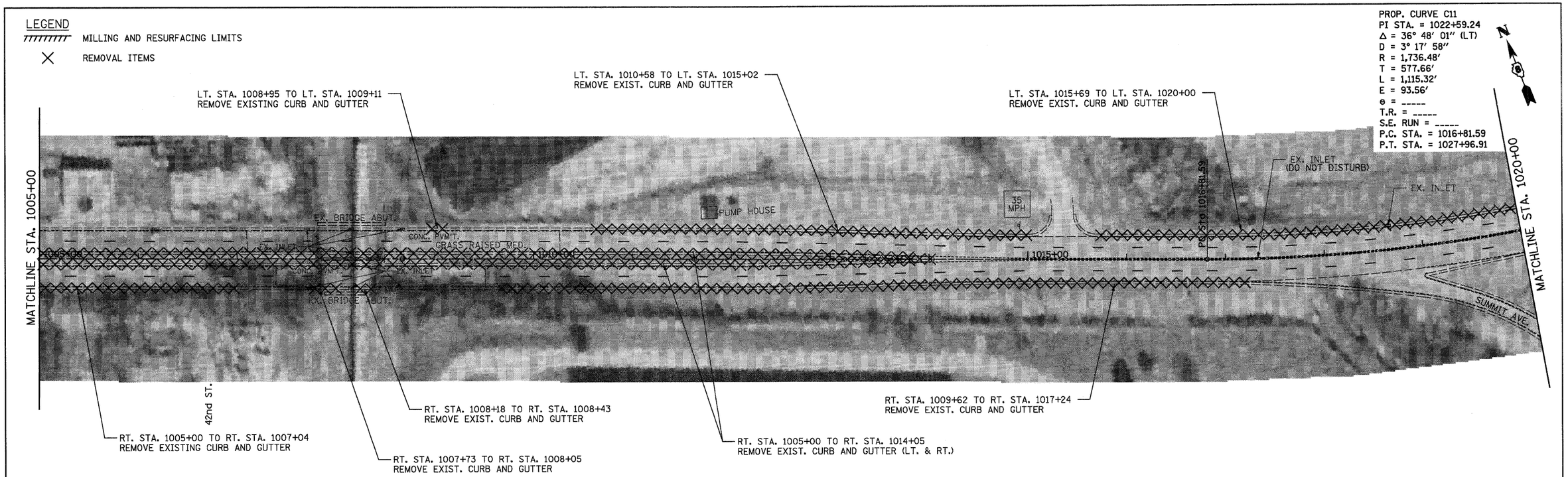

EXISTING & REMOVAL ITEMS

INLETS TO BE ADJUSTED WITH NEW TYPE 3 FRAME AND GRATE

LT. STA. 1008+15 (MED.)
RT. STA. 1008+15 (MED.)

CATCH BASIN TO BE ADJUSTED
STA. 1008+67 (MED.)

PAVEMENT SLOPE TRANSITION
STA. 1005+00 TO STA. 1006+00 (1.5% TO 2.0%)
STA, 1006+00 TO STA. 1010+00 (2.0%)
STA. 1010+00 TO STA. 1011+00 (2.0% TO 1.5%)

FLOWLINE OF THE PROPOSED MEDIAN GUTTER TO BE ADJUSTED BY TRANSITIONING THE PAVEMENT CROSS-SLOPE FROM 1.5% TO 2.0%. (USE THE EXISTING OUTSIDE EDGE OF PAVEMENT AS THE CONTROL ELEVATION.)

FRAMES AND GRATES, TYPE 3

LT. STA. 1018+65

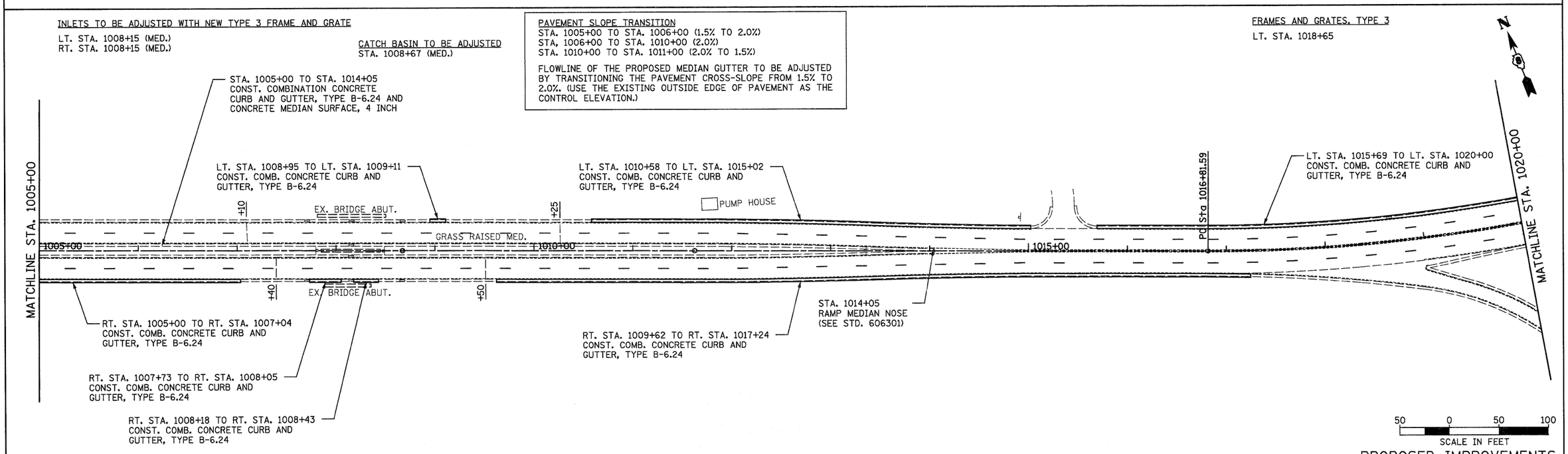

50 0 50 100
SCALE IN FEET

PROPOSED IMPROVEMENTS

FILE NAME = ...\cadd\D876D96-sht-plan03.dgn	USER NAME = SJS	DESIGNED -	REVISED -	STATE OF ILLINOIS DEPARTMENT OF TRANSPORTATION	ST. CLAIR AVE./LINCOLN TRAIL PLAN SHEET	F.A.U. RTE.	SECTION	COUNTY	TOTAL SHEETS / SHEET NO.
		DRAWN -	REVISED -			9166	34-1RS-3	ST. CLAIR	87 / 30
Johnson, Depp & Quisenberry CONSULTING ENGINEERS Springfield, Illinois	PLOT SCALE = 50.0000 ′ / IN.	CHECKED -	REVISED -					CONTRACT NO. 76D96	
	PLOT DATE = 12/15/2010 09:35:59	DATE -	REVISED -		SCALE: SHEET NO. OF SHEETS STA. 1005+00.00 TO STA. 1020+00.00		ILLINOIS FED. AID PROJECT		

LEGEND

MILLING AND RESURFACING LIMITS

REMOVAL ITEMS

PROP. CURVE C11
PI STA. = 1022+59.24
Δ = 36° 48′ 01″ (LT)
D = 3° 17′ 58″
R = 1,736.48′
T = 577.66′
L = 1,115.32′
E = 93.56′
e = -----
T.R. = -----
S.E. RUN = -----
P.C. STA. = 1016+81.59
P.T. STA. = 1027+96.91

RESURFACING AND MILLING OMISSION
(W.B.) LT. STA. 1031+40 TO LT. STA. 1032+15
(E.B.) RT. STA. 1031+70 TO RT. STA. 1032+45

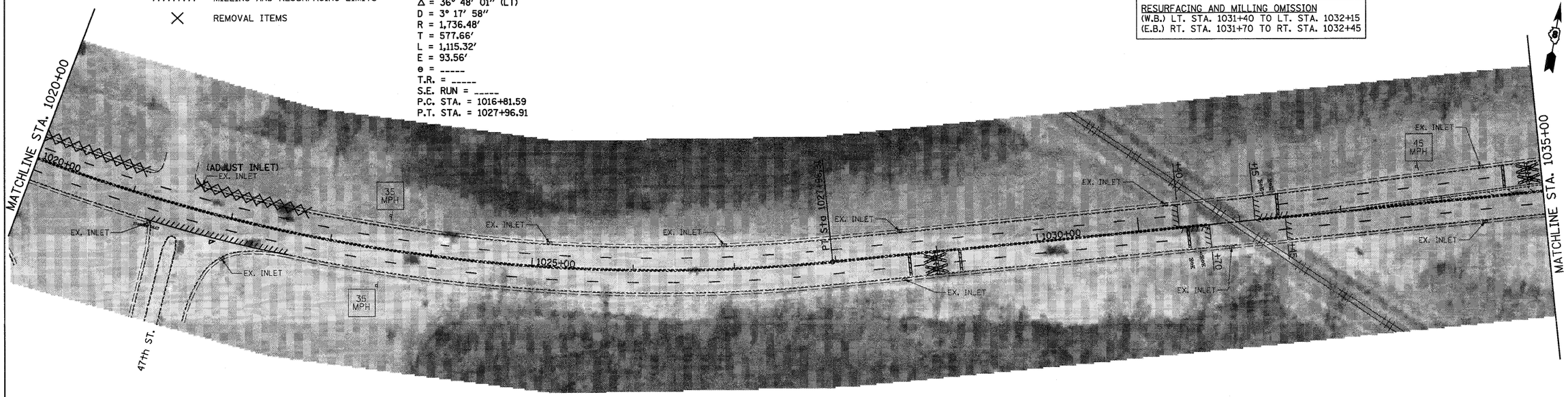

REMOVE EXISTING CURB AND GUTTER
LT. STA. 1020+00 TO LT. STA. 1021+10
LT. STA. 1021+65 TO LT. STA. 1022+72

EXISTING & REMOVAL ITEMS

INLETS TO BE ADJUSTED WITH NEW TYPE 3 FRAME AND GRATE
LT. STA. 1021+63

STA. 1030+54 TO STA. 1031+54
STA. 1032+29 TO STA. 1033+29
REMOVE AND REINSTALL THE EXISTING METAL MEDIAN WITH REFLECTORIZED VERTICAL PANELS. (COST INCLUDED IN THE THE COST OF MILLING AND RESURFACING OPERATIONS.)

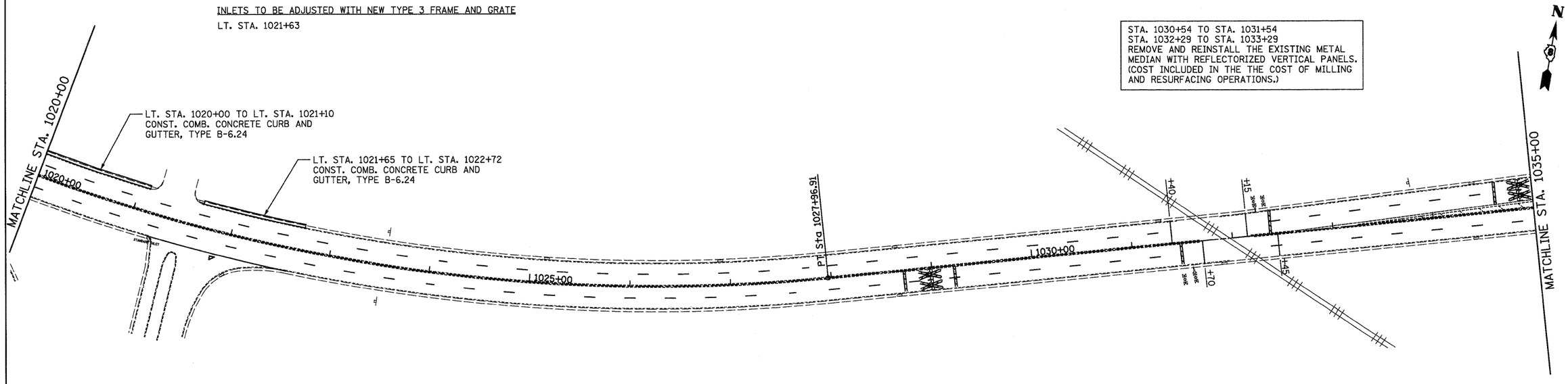

50 0 50 100
SCALE IN FEET

PROPOSED IMPROVEMENTS

FILE NAME = ...\cadd\D876D96-sht-plan04.dgn	USER NAME = SJS	DESIGNED -	REVISED -	STATE OF ILLINOIS DEPARTMENT OF TRANSPORTATION	ST. CLAIR AVE./LINCOLN TRAIL PLAN SHEET	F.A.U. RTE.	SECTION	COUNTY	TOTAL SHEETS	SHEET NO.
		DRAWN -	REVISED -			9166	34-1RS-3	ST. CLAIR	87	31
Johnson, Depp & Quisenberry CONSULTING ENGINEERS Springfield, Illinois	PLOT SCALE = 50.0000 ′ / IN.	CHECKED -	REVISED -					CONTRACT NO. 76D96		
	PLOT DATE = 12/15/2010 09:36:06	DATE -	REVISED -		SCALE: SHEET NO. OF SHEETS STA. 1020+00.00 TO STA. 1035+00.00		ILLINOIS FED. AID PROJECT			

LEGEND

MILLING AND RESURFACING LIMITS

REMOVAL ITEMS

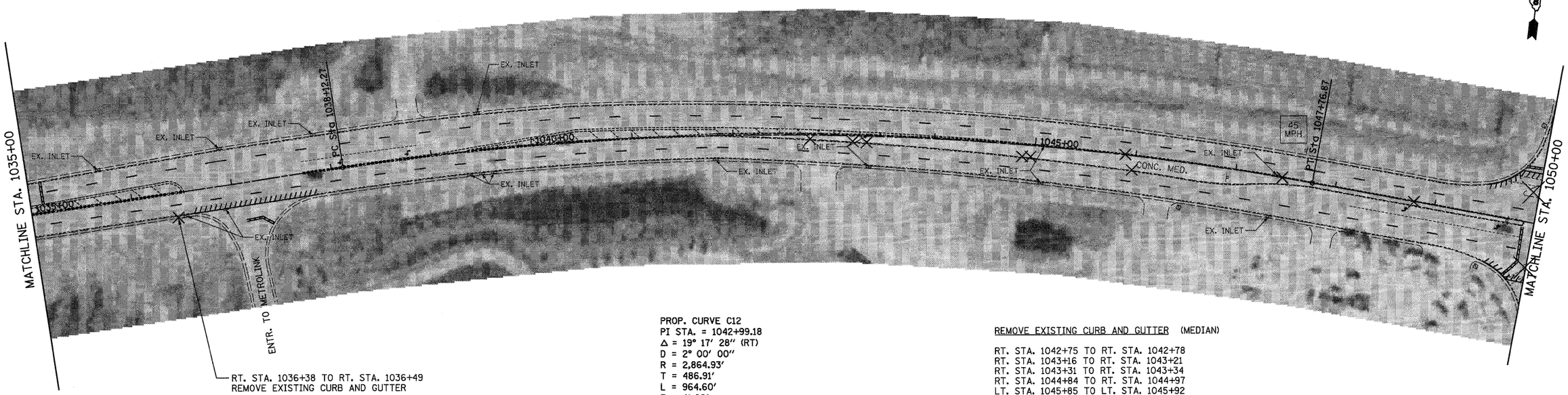

PROP. CURVE C12
PI STA. = 1042+99.18
Δ = 19° 17′ 28″ (RT)
D = 2° 00′ 00″
R = 2,864.93′
T = 486.91′
L = 964.60′
E = 41.08′
θ = _____
T.R. = _____
S.E. RUN = _____
P.C. STA. = 1038+12.27
P.T. STA. = 1047+76.87

REMOVE EXISTING CURB AND GUTTER (MEDIAN)

RT. STA. 1042+75 TO RT. STA. 1042+78
RT. STA. 1043+16 TO RT. STA. 1043+21
RT. STA. 1043+31 TO RT. STA. 1043+34
RT. STA. 1044+84 TO RT. STA. 1044+97
LT. STA. 1045+85 TO LT. STA. 1045+92
RT. STA. 1045+96 TO RT. STA. 1045+98
LT. STA. 1047+44 TO LT. STA. 1047+49
LT. STA. 1048+77 TO LT. STA. 1048+80

EXISTING & REMOVAL ITEMS

SEE DETECTOR LOOP REPLACEMENT PLANS FOR ADDITIONAL DETAILS

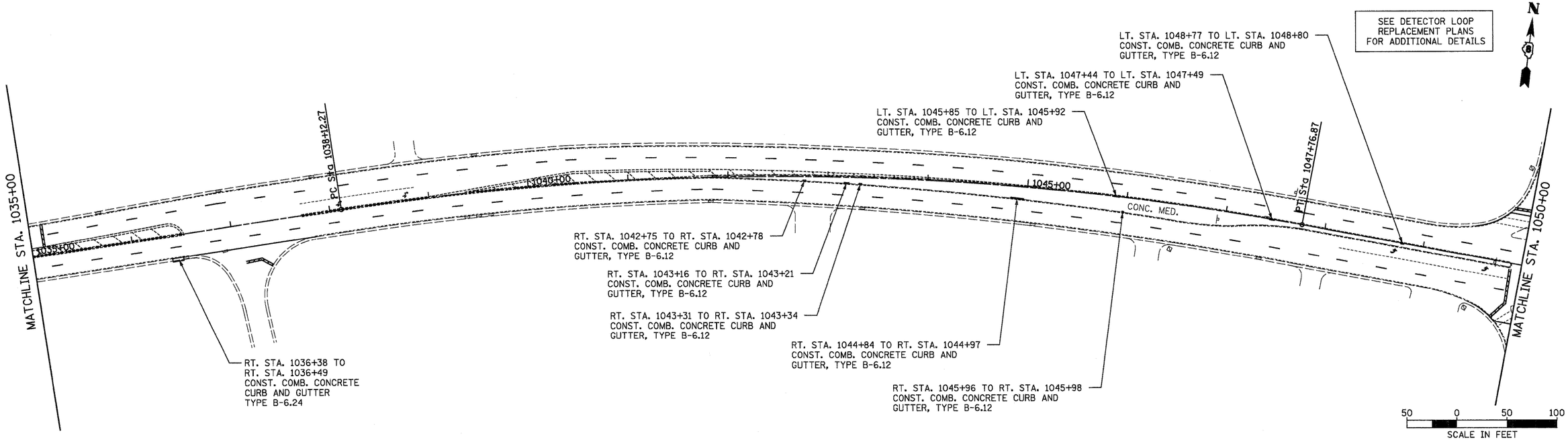

PROPOSED IMPROVEMENTS

FILE NAME = ...\cadd\D876D96-sht-plan05.dgn	USER NAME = SJS	DESIGNED -	REVISED -	STATE OF ILLINOIS DEPARTMENT OF TRANSPORTATION	ST. CLAIR AVE./LINCOLN TRAIL PLAN SHEET				F.A.U. RTE.	SECTION	COUNTY	TOTAL SHEETS	SHEET NO.
		DRAWN -	REVISED -						9166	34-1RS-3	ST. CLAIR	87	32
Johnson, Depp & Quisenberry CONSULTING ENGINEERS Springfield, Illinois	PLOT SCALE = 50.0000 ' / IN.	CHECKED -	REVISED -								CONTRACT NO. 76D96		
	PLOT DATE = 12/15/2010 09:36:13	DATE -	REVISED -		SCALE:	SHEET NO. OF SHEETS	STA. 1035+00.00 TO STA. 1050+00.00			ILLINOIS	FED. AID PROJECT		

LEGEND

MILLING AND RESURFACING LIMITS

REMOVAL ITEMS

ISLAND REMOVAL
LT. STA. 1050+00
RT. STA. 1050+00
LT. STA. 1050+80
RT. STA. 1050+80

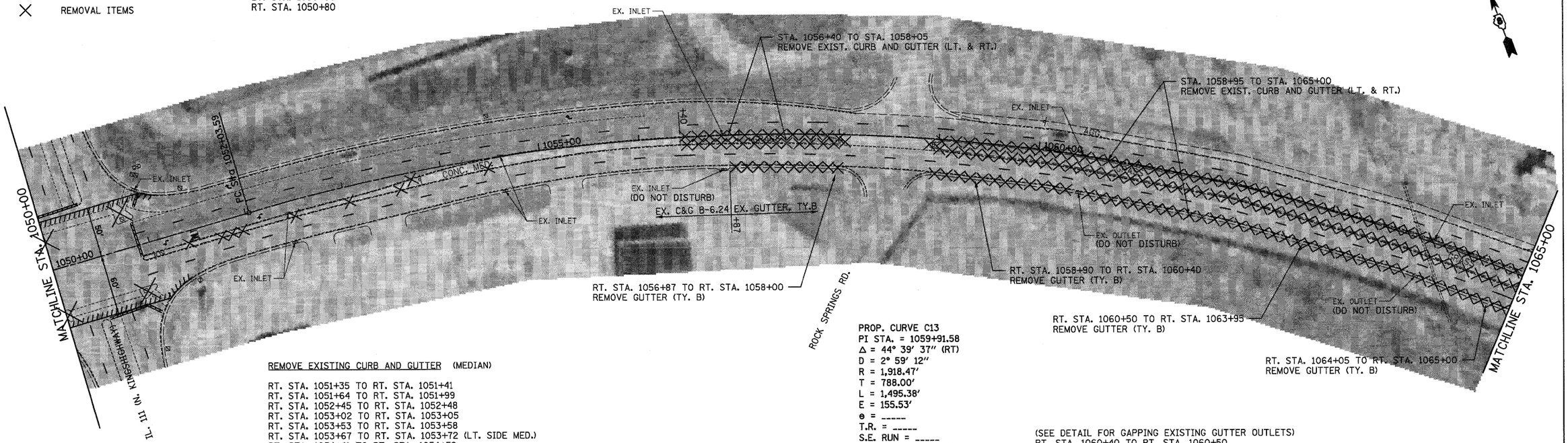

REMOVE EXISTING CURB AND GUTTER (MEDIAN)

RT. STA. 1051+35 TO RT. STA. 1051+41
RT. STA. 1051+64 TO RT. STA. 1051+99
RT. STA. 1052+45 TO RT. STA. 1052+48
RT. STA. 1053+02 TO RT. STA. 1053+05
RT. STA. 1053+53 TO RT. STA. 1053+58
RT. STA. 1053+67 TO RT. STA. 1053+72 (LT. SIDE MED.)
RT. STA. 1054+41 TO RT. STA. 1054+52

PROP. CURVE C13
PI STA. = 1059+91.58
Δ = 44° 39′ 37″ (RT)
D = 2° 59′ 12″
R = 1,918.47′
T = 788.00′
L = 1,495.38′
E = 155.53′
e = -----
T.R. = -----
S.E. RUN = -----
P.C. STA. = 1052+03.59
P.T. STA. = 1066+98.97

(SEE DETAIL FOR GAPPING EXISTING GUTTER OUTLETS)
RT. STA. 1060+40 TO RT. STA. 1060+50
RT. STA. 1063+95 TO RT. STA. 1064+05

EXISTING & REMOVAL ITEMS

SEE DETECTOR LOOP REPLACEMENT PLANS FOR ADDITIONAL DETAILS

PROPOSED FRAMES AND GRATES, TYPE 12 (MEDIAN)
LT. STA. 1056+84
LT. STA. 1060+46
LT. STA. 1064+05

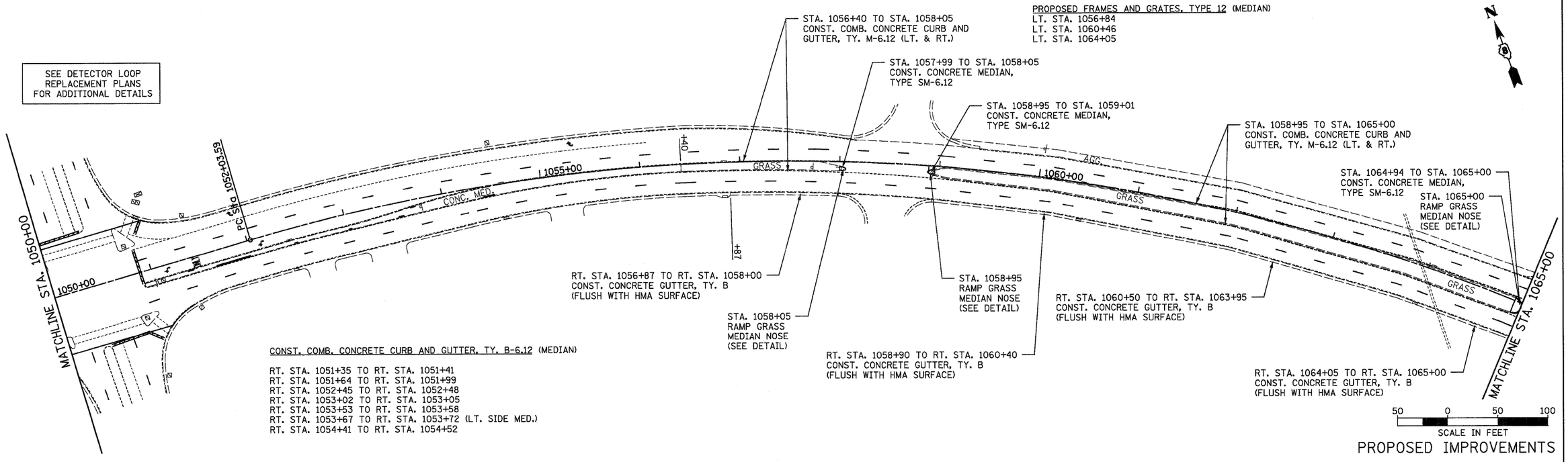

CONST. COMB. CONCRETE CURB AND GUTTER, TY. B-6.12 (MEDIAN)

RT. STA. 1051+35 TO RT. STA. 1051+41
RT. STA. 1051+64 TO RT. STA. 1051+99
RT. STA. 1052+45 TO RT. STA. 1052+48
RT. STA. 1053+02 TO RT. STA. 1053+05
RT. STA. 1053+53 TO RT. STA. 1053+58
RT. STA. 1053+67 TO RT. STA. 1053+72 (LT. SIDE MED.)
RT. STA. 1054+41 TO RT. STA. 1054+52

50 0 50 100
SCALE IN FEET

PROPOSED IMPROVEMENTS

FILE NAME = ...\eadd\D876D96-sht-plan06.dgn	USER NAME = SJS	DESIGNED -	REVISED -	STATE OF ILLINOIS DEPARTMENT OF TRANSPORTATION	ST. CLAIR AVE./LINCOLN TRAIL PLAN SHEET	F.A.U. RTE.	SECTION	COUNTY	TOTAL SHEETS / SHEET NO.
		DRAWN -	REVISED -			9166	34-1RS-3	ST. CLAIR	87 / 33
Johnson, Depp & Quisenberry CONSULTING ENGINEERS Springfield, Illinois	PLOT SCALE = 50.0000 ′ / IN.	CHECKED -	REVISED -					CONTRACT NO. 76D96	
	PLOT DATE = 12/15/2010 09:36:21	DATE -	REVISED -		SCALE: SHEET NO. OF SHEETS STA. 1050+00.00 TO STA. 1065+00.00		ILLINOIS FED. AID PROJECT		

LEGEND

MILLING AND RESURFACING LIMITS

REMOVAL ITEMS

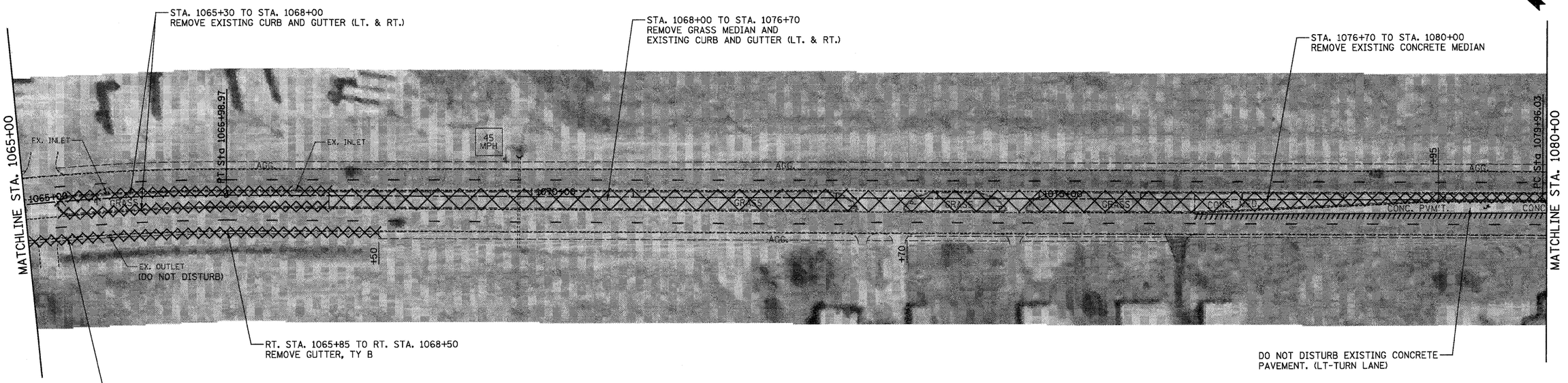

EXISTING & REMOVAL ITEMS

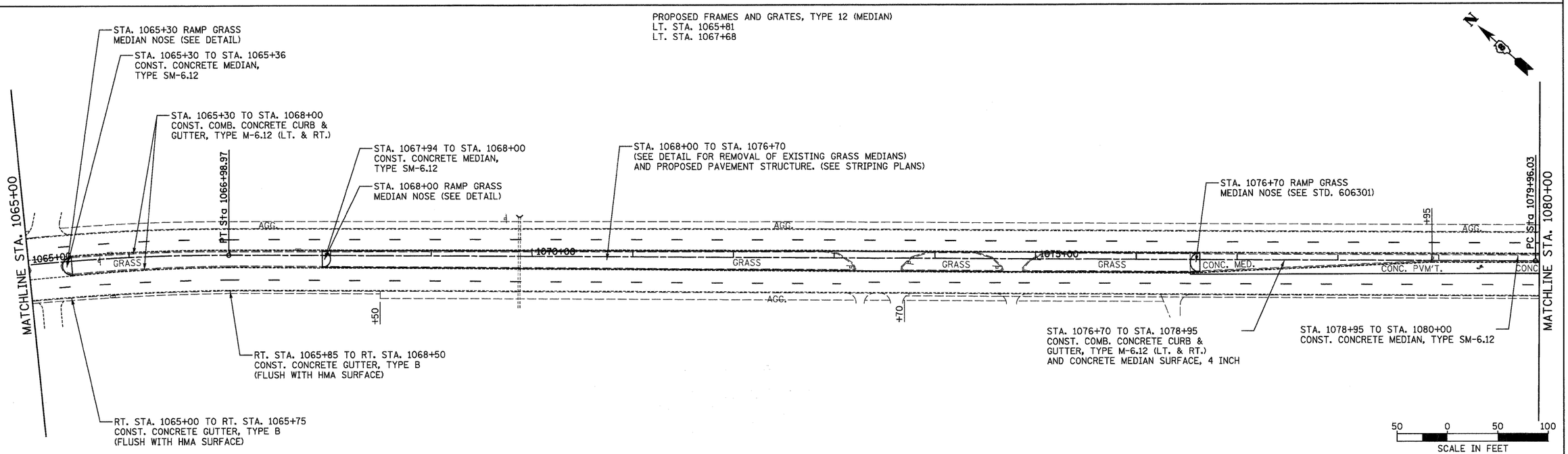

PROPOSED IMPROVEMENTS

FILE NAME = ...\cadd\D876D96-sht-plan07.dgn	USER NAME = SJS	DESIGNED -	REVISED -	STATE OF ILLINOIS DEPARTMENT OF TRANSPORTATION	ST. CLAIR AVE./LINCOLN TRAIL PLAN SHEET	F.A.U. RTE.	SECTION	COUNTY	TOTAL SHEETS	SHEET NO.
		DRAWN -	REVISED -			9166	34-1RS-3	ST. CLAIR	87	34
Johnson, Depp & Quisenberry CONSULTING ENGINEERS Springfield, Illinois	PLOT SCALE = 50.0000 ' / IN.	CHECKED -	REVISED -					CONTRACT NO. 76D96		
	PLOT DATE = 12/15/2010 09:36:28	DATE -	REVISED -		SCALE: SHEET NO. OF SHEETS STA. 1065+00.00 TO STA. 1080+00.00		ILLINOIS FED. AID PROJECT			

LEGEND

MILLING AND RESURFACING LIMITS

REMOVAL ITEMS

PROP. CURVE C14
PI STA. = 1096+97.85
Δ = 26° 44′ 00″ (LT)
D = 0° 48′ 00″
R = 7,161.98′
T = 1,701.82′
L = 3,341.67′
E = 199.42′
e = -----
T.R. = -----
S.E. RUN = -----
P.C. STA. = 1079+96.03
P.T. STA. = 1113+37.70

REMOVE EXISTING OUTLETS
(COST INCLUDED WITH GUTTER REMOVAL)
LT. STA. 1083+20
LT. STA. 1089+10

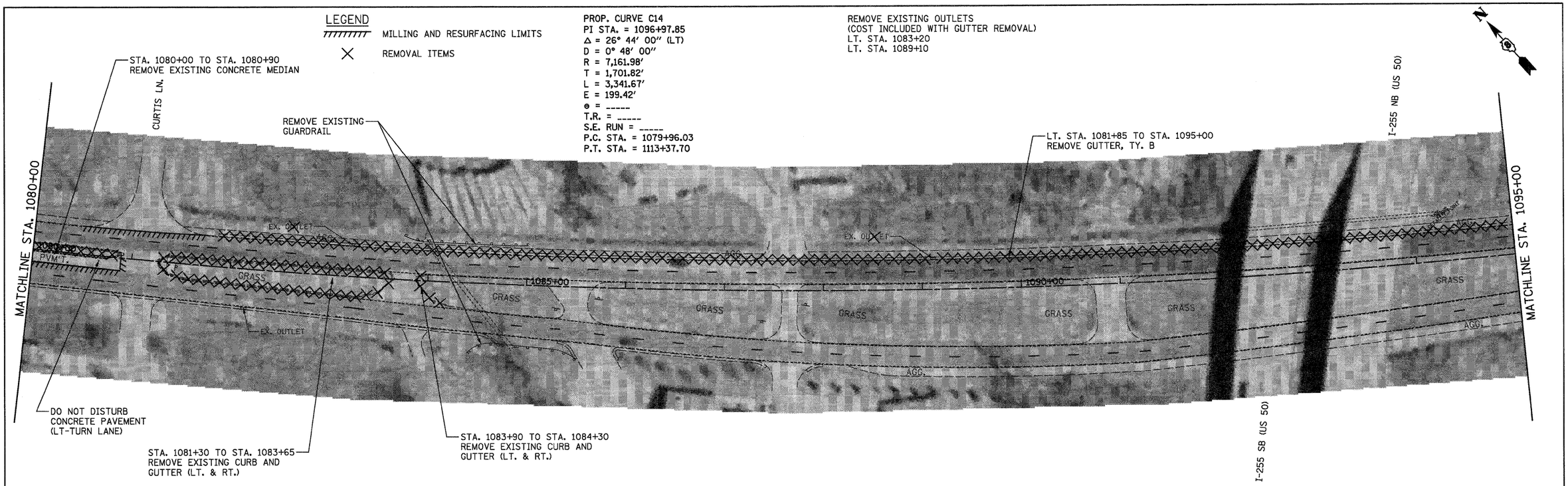

EXISTING & REMOVAL ITEMS

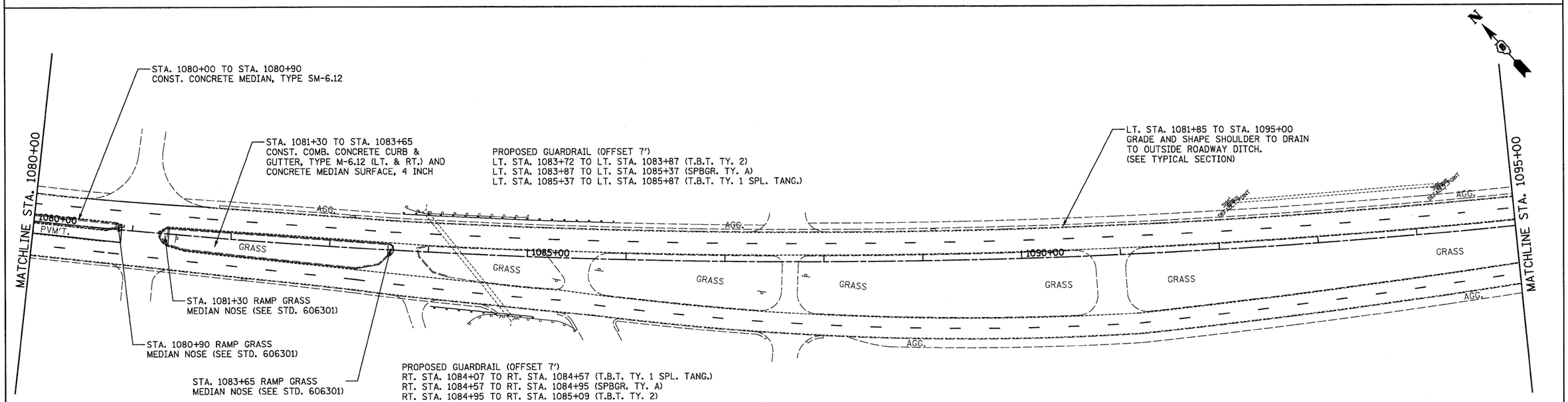

50 0 50 100
SCALE IN FEET

PROPOSED IMPROVEMENTS

FILE NAME = ...\oadd\D876D96-sht-plan08.dgn	USER NAME = SJS	DESIGNED -	REVISED -	STATE OF ILLINOIS DEPARTMENT OF TRANSPORTATION	ST. CLAIR AVE./LINCOLN TRAIL PLAN SHEET	F.A.U. RTE.	SECTION	COUNTY	TOTAL SHEETS / SHEET NO.
Johnson, Depp & Quisenberry CONSULTING ENGINEERS Springfield, Illinois		DRAWN -	REVISED -			9166	34-1RS-3	ST. CLAIR	87 / 35
	PLOT SCALE = 50.0000 ′ / IN.	CHECKED -	REVISED -					CONTRACT NO. 76D96	
	PLOT DATE = 12/15/2010 09:36:36	DATE -	REVISED -		SCALE: SHEET NO. OF SHEETS STA. 1080+00.00 TO STA. 1095+00.00		ILLINOIS FED. AID PROJECT		

LEGEND

MILLING AND RESURFACING LIMITS

REMOVAL ITEMS

PROP. CURVE C14
PI STA. = 1096+97.85
Δ = 26° 44′ 00″ (LT)
D = 0° 48′ 00″
R = 7,161.98′
T = 1,701.82′
L = 3,341.67′
E = 199.42′
θ = -----
T.R. = -----
S.E. RUN = -----
P.C. STA. = 1079+96.03
P.T. STA. = 1113+37.70

REMOVE EXISTING OUTLETS
(COST INCLUDED WITH GUTTER REMOVAL)
LT. STA. 1097+05
LT. STA. 1106+75
LT. STA. 1108+15

REMOVE EXISTING INLETS
℄ STA. 1100+35

LT. STA. 1095+00 TO STA. 1102+60
REMOVE GUTTER, TY. B

LT. STA. 1103+30 TO STA. 1110+00
REMOVE GUTTER, TY. B

REMOVE EXISTING
GUARDRAIL

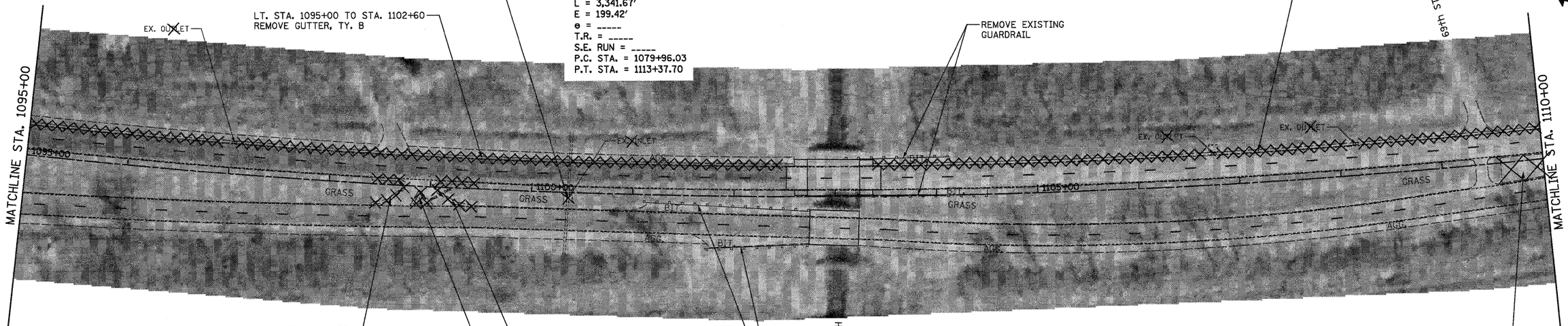

STA. 1098+40 TO STA. 1098+75
REMOVE EXISTING CURB AND
GUTTER (LT. & RT.)

STA. 1099+05 TO STA. 1099+45
REMOVE EXISTING CURB AND
GUTTER (LT. & RT.)

STA. 1098+90
ISLAND REMOVAL

REMOVE EXISTING
GUARDRAIL

STA. 1109+58 TO STA. 1110+00
REMOVE EXISTING CONCRETE MEDIAN
AND EXISTING CURB AND
GUTTER (LT. & RT.)

EXISTING & REMOVAL ITEMS

RESURFACING OMISSION
STA. 1102+72 TO STA. 1103+24

PROPOSED GUARDRAIL
(MEDIAN WB) (OFFSET 6′)
LT. STA. 1103+24 TO LT. STA. 1103+67 (T.B.T. TY. 6)
LT. STA. 1103+67 TO LT. STA. 1104+67 (SPBGR. TY. A)
LT. STA. 1104+67 TO LT. STA. 1105+17 (T.B.T. TY. 1 SPL. TANG.)

(OUTSIDE WB) (OFFSET 8′)
LT. STA. 1103+24 TO LT. STA. 1103+67 (T.B.T. TY. 6)
LT. STA. 1103+67 TO LT. STA. 1104+67 (SPBGR. TY. A)
LT. STA. 1104+67 TO LT. STA. 1105+17 (T.B.T. TY. 1 SPL. TANG.)

℄ STA. 1100+35
CONSTRUCT FLUSH INLET
BOX FOR MEDIAN, STD. 542546
(MATCH TO EXISTING 2′x2′ BOX
CULVERT FLOWLINES)

LT. STA. 1095+00 TO STA. 1102+60
GRADE AND SHAPE SHOULDER TO DRAIN
TO OUTSIDE ROADWAY DITCH.
(SEE TYPICAL SECTION)

LT. STA. 1103+30 TO STA. 1110+00
GRADE AND SHAPE SHOULDER TO DRAIN
TO OUTSIDE ROADWAY DITCH.
(SEE TYPICAL SECTION)

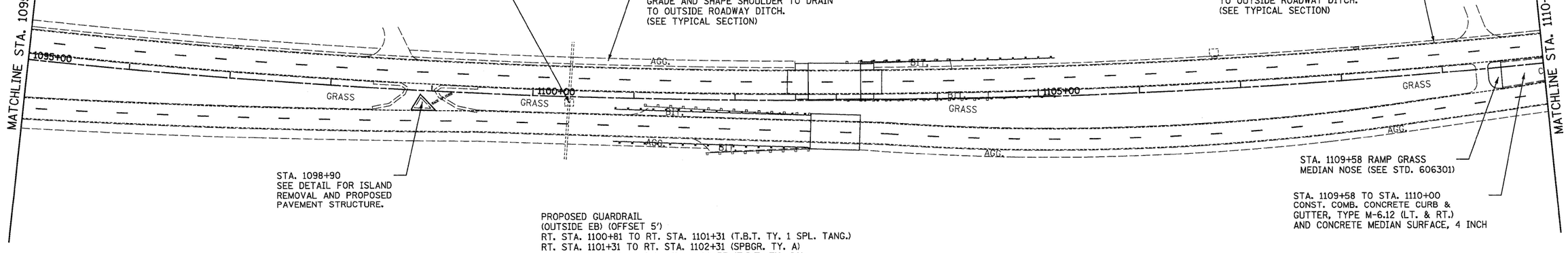

STA. 1098+90
SEE DETAIL FOR ISLAND
REMOVAL AND PROPOSED
PAVEMENT STRUCTURE.

PROPOSED GUARDRAIL
(OUTSIDE EB) (OFFSET 5′)
RT. STA. 1100+81 TO RT. STA. 1101+31 (T.B.T. TY. 1 SPL. TANG.)
RT. STA. 1101+31 TO RT. STA. 1102+31 (SPBGR. TY. A)
RT. STA. 1102+31 TO RT. STA. 1102+75 (T.B.T. TY. 6A)

(MEDIAN EB) (OFFSET 5′)
RT. STA. 1100+81 TO RT. STA. 1101+31 (T.B.T. TY. 1 SPL. TANG.)
RT. STA. 1101+31 TO RT. STA. 1102+31 (SPBGR. TY. A)
RT. STA. 1102+31 TO RT. STA. 1102+75 (T.B.T. TY. 6A)

STA. 1109+58 RAMP GRASS
MEDIAN NOSE (SEE STD. 606301)

STA. 1109+58 TO STA. 1110+00
CONST. COMB. CONCRETE CURB &
GUTTER, TYPE M-6.12 (LT. & RT.)
AND CONCRETE MEDIAN SURFACE, 4 INCH

50 0 50 100
SCALE IN FEET

PROPOSED IMPROVEMENTS

FILE NAME = ...\cadd\D876D96-sht-plan09.dgn	USER NAME = SJS	DESIGNED -	REVISED -	STATE OF ILLINOIS DEPARTMENT OF TRANSPORTATION	ST. CLAIR AVE./LINCOLN TRAIL PLAN SHEET	F.A.U. RTE.	SECTION	COUNTY	TOTAL SHEETS / SHEET NO.
		DRAWN -	REVISED -			9166	34-1RS-3	ST. CLAIR	87 / 36
Johnson, Depp & Quisenberry CONSULTING ENGINEERS Springfield, Illinois	PLOT SCALE = 50.0000 ′ / IN.	CHECKED -	REVISED -					CONTRACT NO. 76D96	
	PLOT DATE = 12/15/2010 09:36:44	DATE -	REVISED -		SCALE: SHEET NO. OF SHEETS STA. 1095+00.00 TO STA. 1110+00.00		ILLINOIS FED. AID PROJECT		

LEGEND

MILLING AND RESURFACING LIMITS

REMOVAL ITEMS

REMOVE EXISTING OUTLETS
(COST INCLUDED WITH GUTTER REMOVAL)
LT. STA. 1113+00

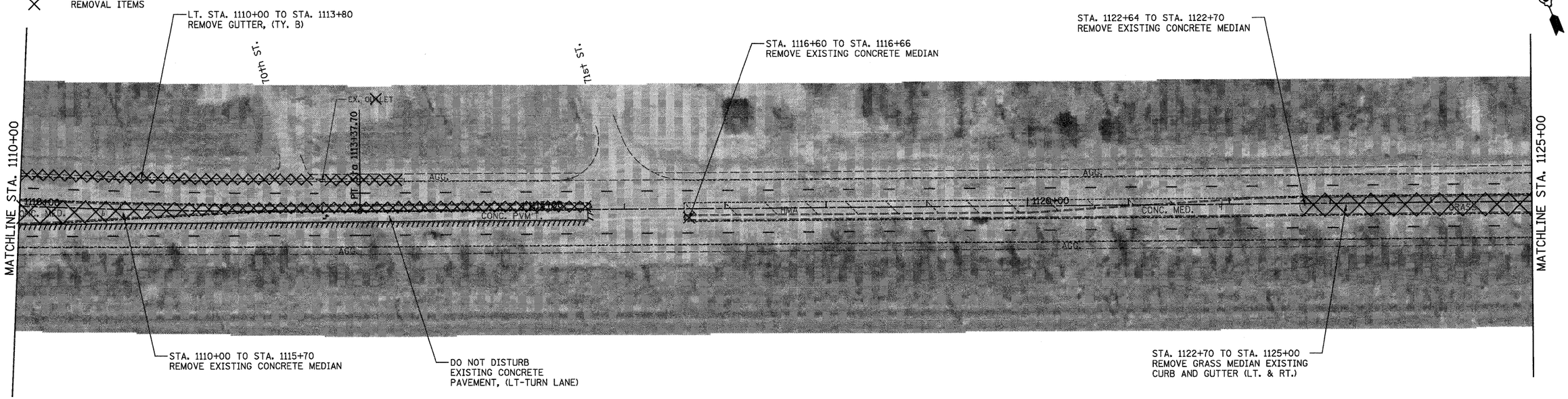

EXISTING & REMOVAL ITEMS

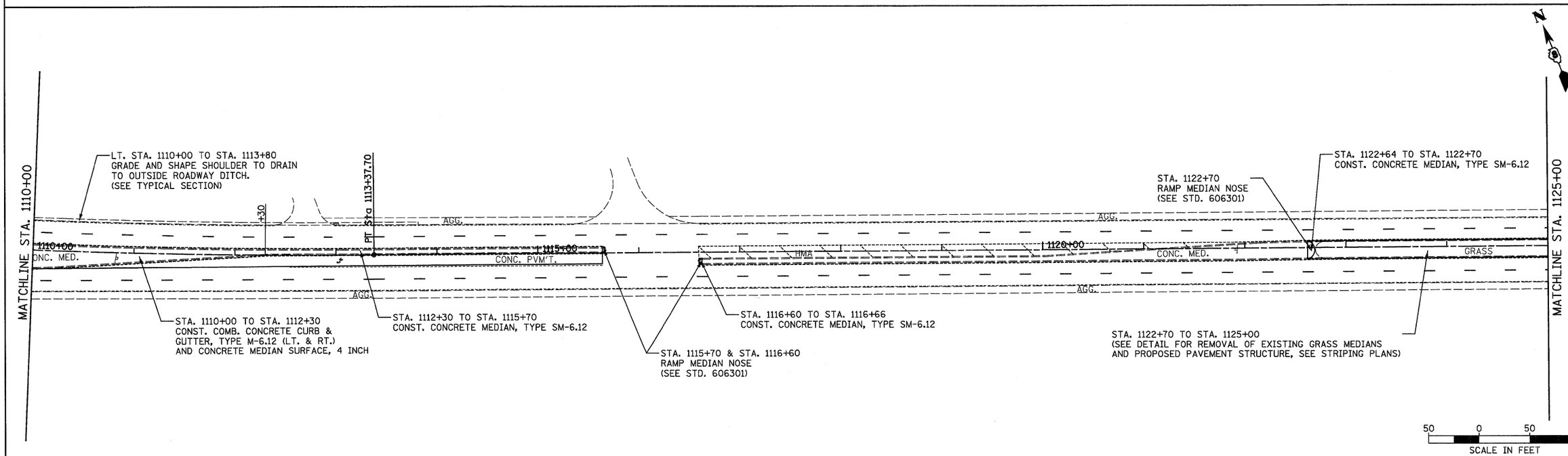

PROPOSED IMPROVEMENTS

FILE NAME = ...\cadd\D876D96-sht-plan10.dgn	USER NAME = SJS	DESIGNED -	REVISED -	STATE OF ILLINOIS DEPARTMENT OF TRANSPORTATION	ST. CLAIR AVE./LINCOLN TRAIL PLAN SHEET	F.A.U. RTE.	SECTION	COUNTY	TOTAL SHEETS / SHEET NO.
		DRAWN -	REVISED -			9166	34-1RS-3	ST. CLAIR	87 / 37
Johnson, Depp & Quisenberry CONSULTING ENGINEERS Springfield, Illinois	PLOT SCALE = 50.0000 ' / IN.	CHECKED -	REVISED -					CONTRACT NO. 76D96	
	PLOT DATE = 12/15/2010 09:36:51	DATE -	REVISED -		SCALE: SHEET NO. OF SHEETS STA. 1110+00.00 TO STA. 1125+00.00		ILLINOIS FED. AID PROJECT		

LEGEND

MILLING AND RESURFACING LIMITS

REMOVAL ITEMS

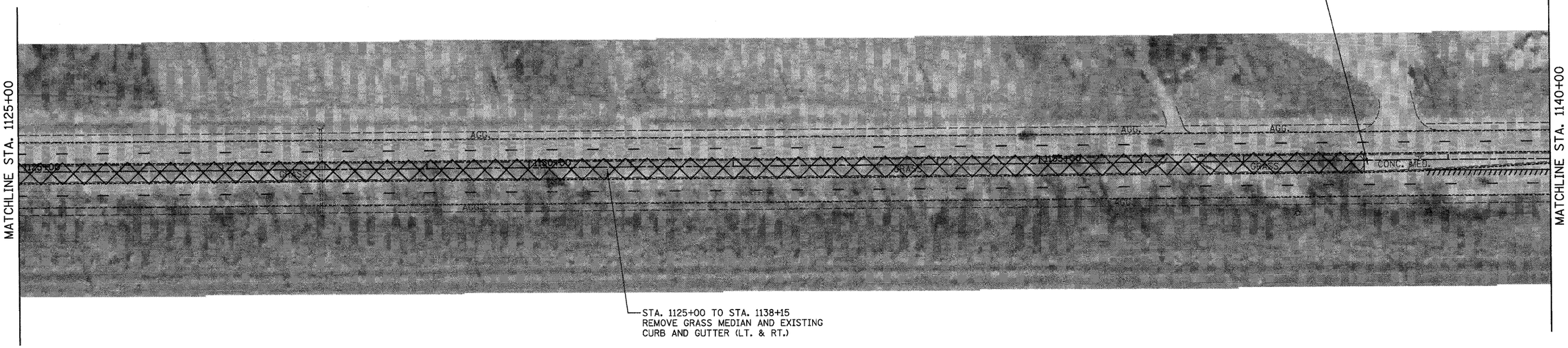

EXISTING & REMOVAL ITEMS

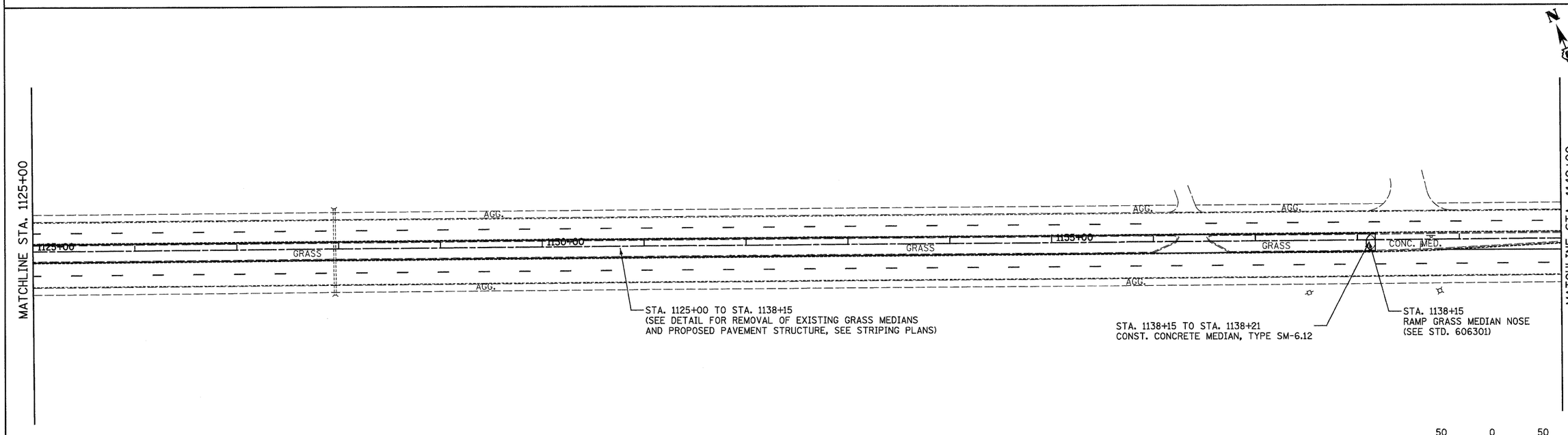

50 0 50 100

SCALE IN FEET

PROPOSED IMPROVEMENTS

FILE NAME = ...\cadd\D876D96-sht-plan11.dgn	USER NAME = SJS	DESIGNED -	REVISED -	STATE OF ILLINOIS DEPARTMENT OF TRANSPORTATION	ST. CLAIR AVE./LINCOLN TRAIL PLAN SHEET	F.A.U. RTE.	SECTION	COUNTY	TOTAL SHEETS	SHEET NO.
		DRAWN -	REVISED -			9166	34-1RS-3	ST. CLAIR	87	38
Johnson, Depp & Quisenberry CONSULTING ENGINEERS Springfield, Illinois	PLOT SCALE = 50.0000 ' / IN.	CHECKED -	REVISED -					CONTRACT NO. 76D96		
	PLOT DATE = 12/15/2010 09:36:58	DATE -	REVISED -		SCALE: SHEET NO. OF SHEETS STA. 1125+00.00 TO STA. 1140+00.00		ILLINOIS FED. AID PROJECT			

LEGEND

MILLING AND RESURFACING LIMITS

REMOVAL ITEMS

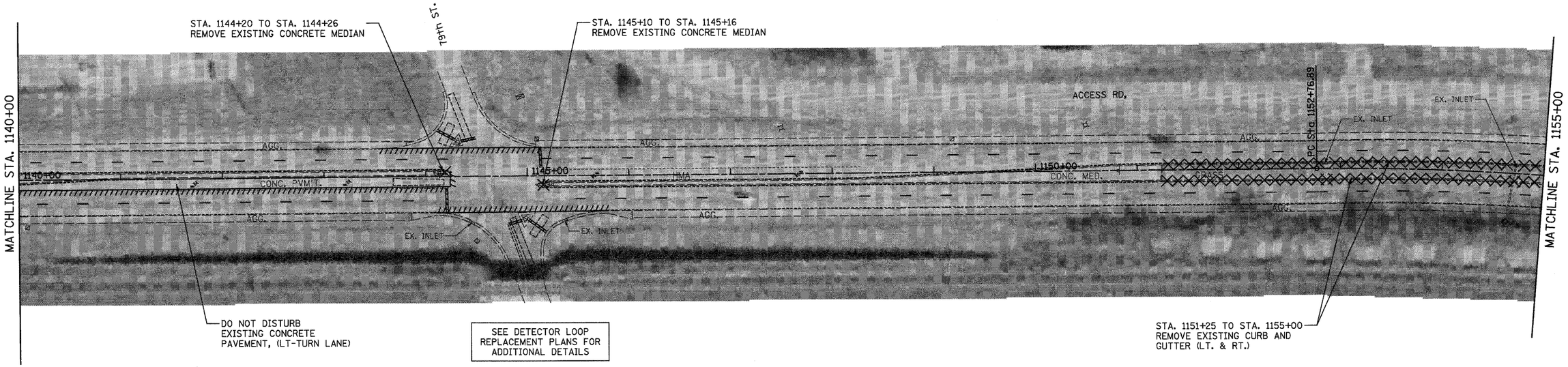

EXISTING & REMOVAL ITEMS

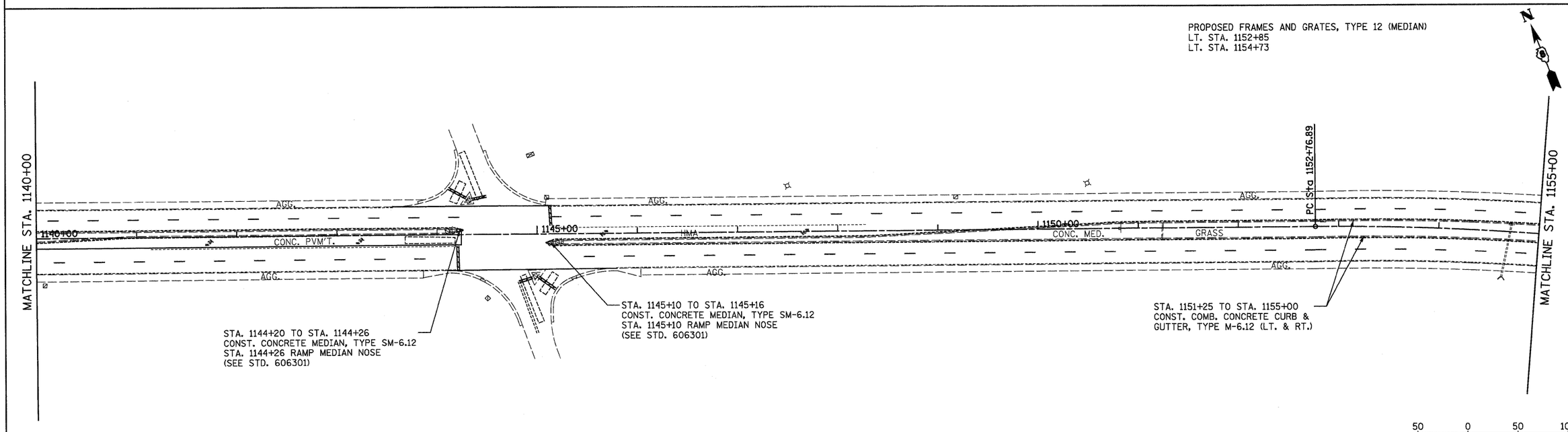

PROPOSED IMPROVEMENTS

FILE NAME = ...\oadd\D876D96-sht-plan12.dgn	USER NAME = SJS	DESIGNED -	REVISED -	STATE OF ILLINOIS DEPARTMENT OF TRANSPORTATION	ST. CLAIR AVE./LINCOLN TRAIL PLAN SHEET	F.A.U. RTE.	SECTION	COUNTY	TOTAL SHEETS / SHEET NO.
Johnson, Depp & Quisenberry CONSULTING ENGINEERS Springfield, Illinois		DRAWN -	REVISED -			9166	34-1RS-3	ST. CLAIR	87 / 39
	PLOT SCALE = 50.0000 ' / IN.	CHECKED -	REVISED -					CONTRACT NO. 76D96	
	PLOT DATE = 12/15/2010 09:37:06	DATE -	REVISED -		SCALE: SHEET NO. OF SHEETS STA. 1140+00.00 TO STA. 1155+00.00			ILLINOIS FED. AID PROJECT	

LEGEND

MILLING AND RESURFACING LIMITS

REMOVAL ITEMS

REMOVE EXISTING INLETS
LT. STA. 1169+98 (MED.)

STA. 1155+00 TO STA. 1159+00
REMOVE EXISTING CURB AND GUTTER (LT. & RT.)

STA. 1159+00 TO STA. 1170+00
REMOVE GRASS MEDIAN AND EXISTING
CURB AND GUTTER (LT. & RT.)

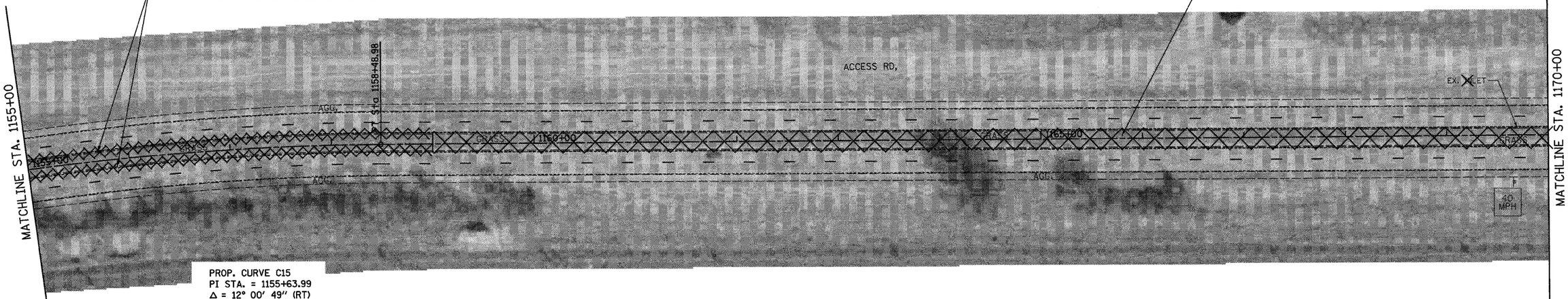

PROP. CURVE C15
PI STA. = 1155+63.99
Δ = 12° 00′ 49″ (RT)
D = 2° 06′ 00″
R = 2,728.40′
T = 287.10′
L = 572.09′
E = 15.06′
θ = _____
T.R. = _____
S.E. RUN = _____
P.C. STA. = 1152+76.89
P.T. STA. = 1158+48.98

EXISTING & REMOVAL ITEMS

STA. 1155+00 TO STA. 1159+00
CONST. COMB. CONCRETE CURB &
GUTTER, TYPE M-6.12 (LT. & RT.)

STA. 1159+00 TO STA. 1170+00
(SEE DETAIL FOR REMOVAL OF EXISTING GRASS MEDIANS
AND PROPOSED PAVEMENT STRUCTURE, SEE STRIPING PLANS)

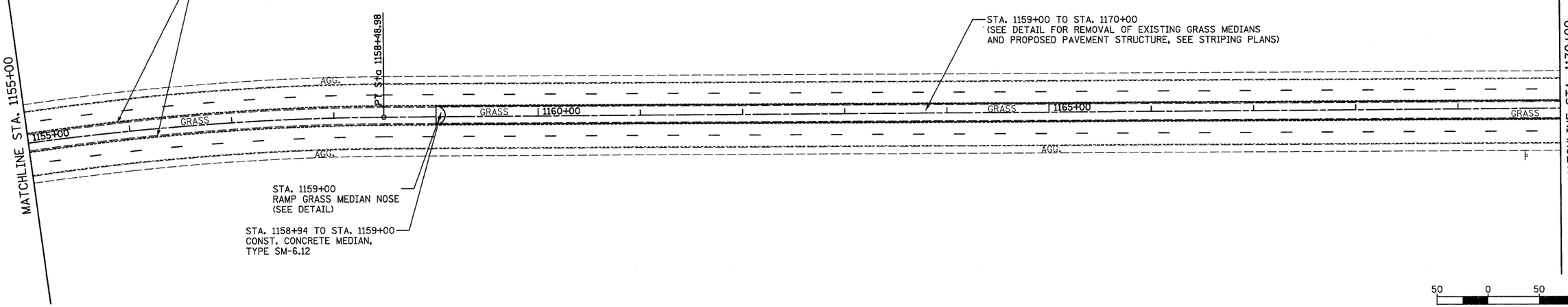

STA. 1159+00
RAMP GRASS MEDIAN NOSE
(SEE DETAIL)

STA. 1158+94 TO STA. 1159+00
CONST. CONCRETE MEDIAN,
TYPE SM-6.12

50 0 50 100
SCALE IN FEET

PROPOSED IMPROVEMENTS

FILE NAME = ...\oadd\D876D96-sht-plan13.dgn	USER NAME = SJS	DESIGNED -	REVISED -	STATE OF ILLINOIS DEPARTMENT OF TRANSPORTATION	ST. CLAIR AVE./LINCOLN TRAIL PLAN SHEET	F.A.U. RTE.	SECTION	COUNTY	TOTAL SHEETS / SHEET NO.
Johnson, Depp & Quisenberry CONSULTING ENGINEERS Springfield, Illinois		DRAWN -	REVISED -			9166	34-1RS-3	ST. CLAIR	87 / 40
	PLOT SCALE = 50.0000 ′ / IN.	CHECKED -	REVISED -					CONTRACT NO. 76D96	
	PLOT DATE = 12/15/2010 09:37:13	DATE -	REVISED -		SCALE: SHEET NO. OF SHEETS STA. 1155+00.00 TO STA. 1170+00.00		ILLINOIS FED. AID PROJECT		

LEGEND

MILLING AND RESURFACING LIMITS

REMOVAL ITEMS

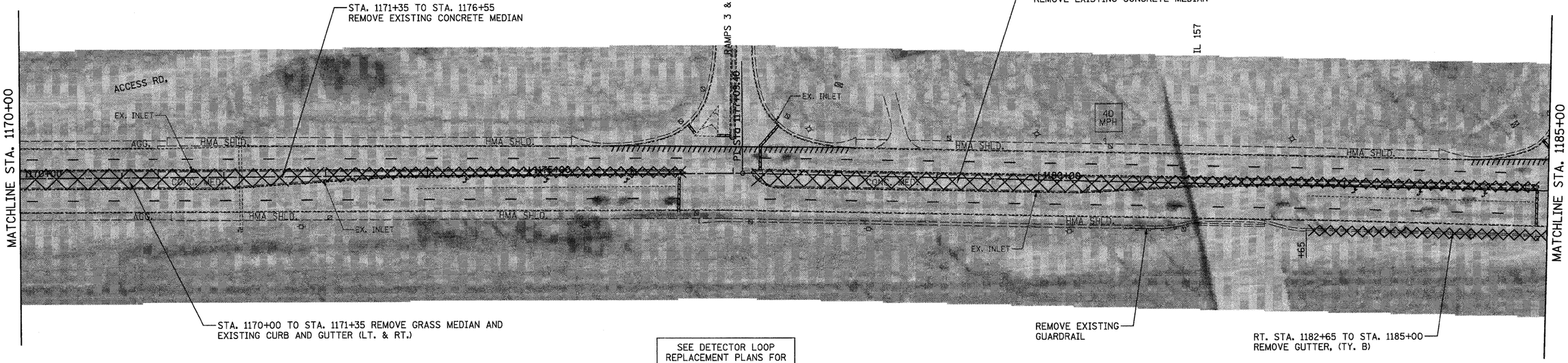

SEE DETECTOR LOOP
REPLACEMENT PLANS FOR
ADDITIONAL DETAILS

EXISTING & REMOVAL ITEMS

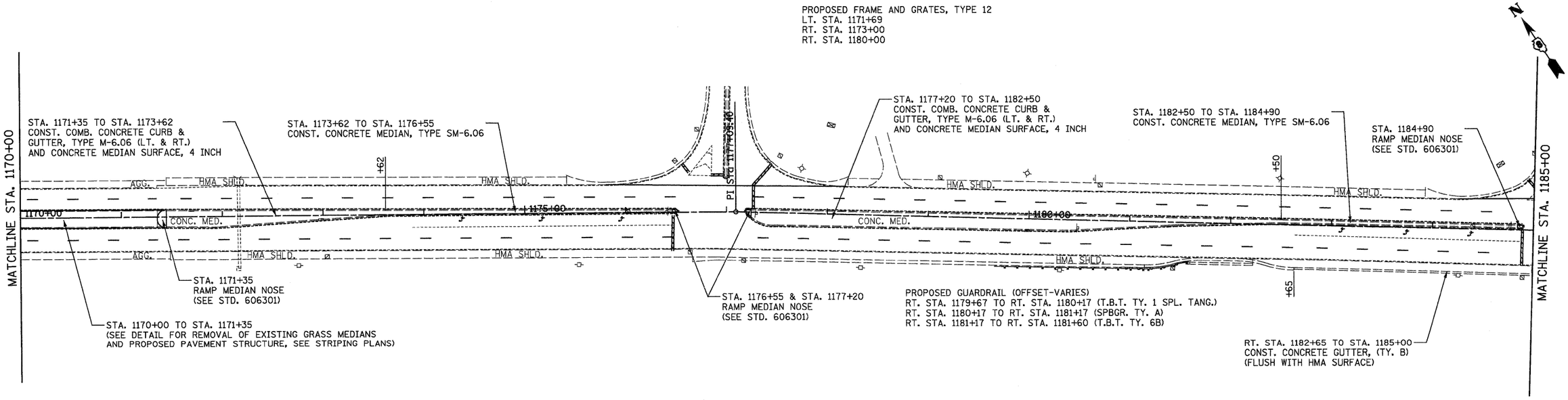

PROPOSED IMPROVEMENTS

FILE NAME = ...\cadd\D876D96-sht-plan14.dgn	USER NAME = SJS	DESIGNED -	REVISED -	STATE OF ILLINOIS DEPARTMENT OF TRANSPORTATION	ST. CLAIR AVE./LINCOLN TRAIL PLAN SHEET			F.A.U. RTE.	SECTION	COUNTY	TOTAL SHEETS / SHEET NO.
		DRAWN -	REVISED -					9166	34-1RS-3	ST. CLAIR	87 / 41
Johnson, Depp & Quisenberry CONSULTING ENGINEERS Springfield, Illinois	PLOT SCALE = 50.0000 ' / IN.	CHECKED -	REVISED -							CONTRACT NO. 76D96	
	PLOT DATE = 12/15/2010 09:37:20	DATE -	REVISED -		SCALE:	SHEET NO. OF SHEETS	STA. 1170+00.00 TO STA. 1185+00.00		ILLINOIS FED. AID PROJECT		

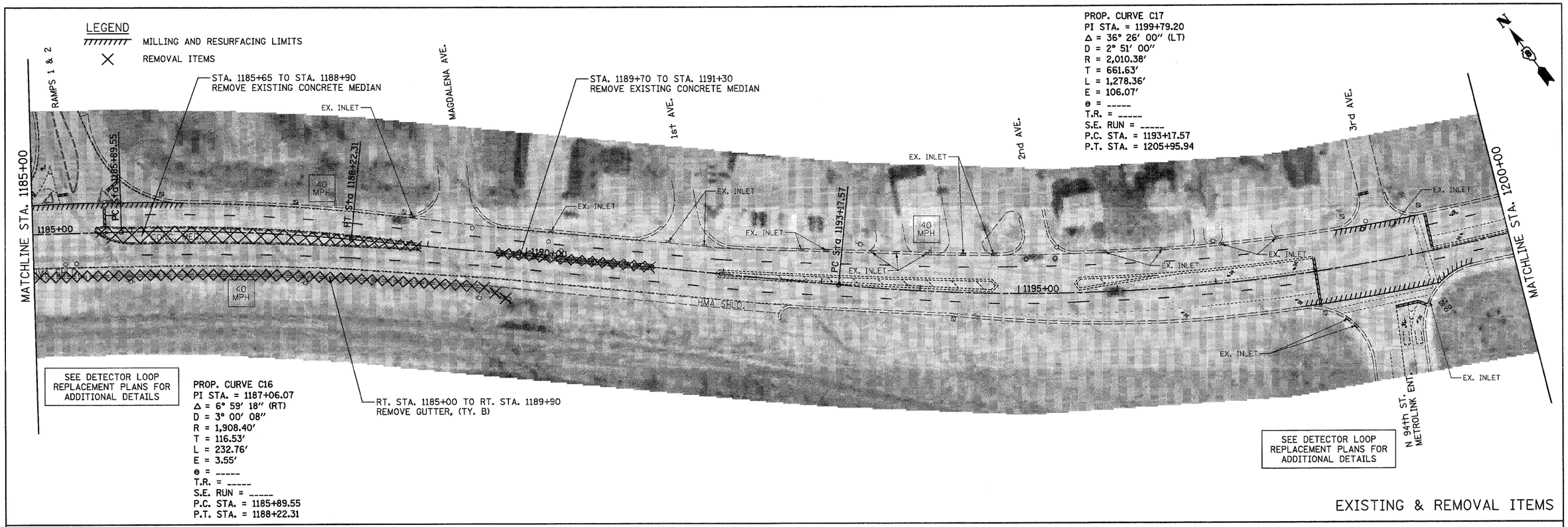

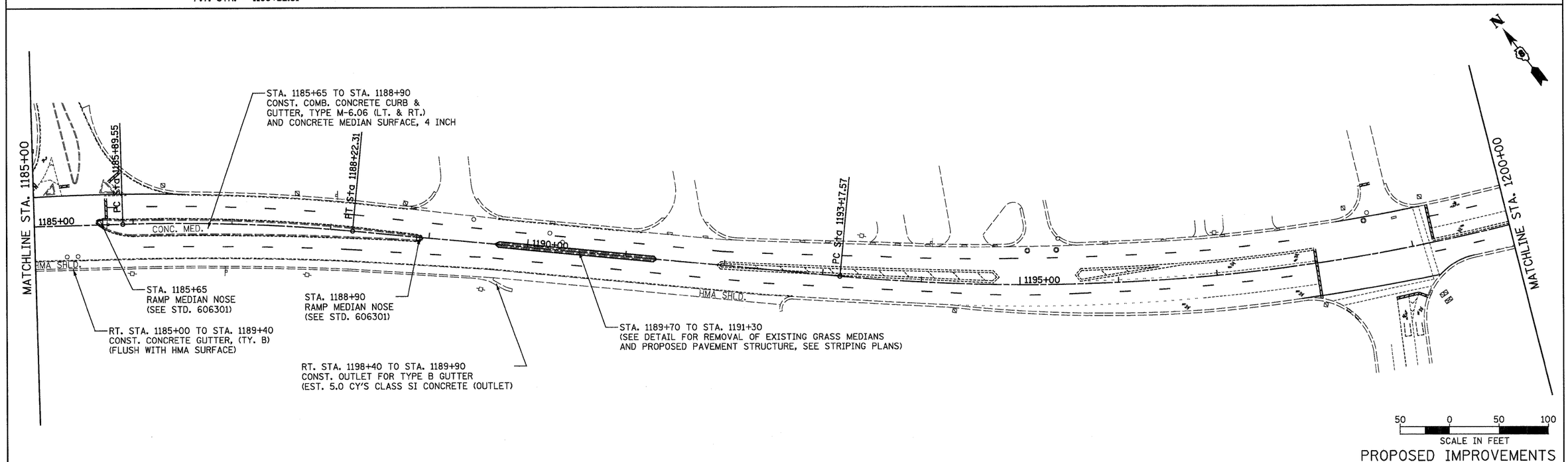

FILE NAME = ...\cadd\D876D96-sht-plan15.dgn	USER NAME = SJS	DESIGNED -	REVISED -	STATE OF ILLINOIS DEPARTMENT OF TRANSPORTATION	ST. CLAIR AVE./LINCOLN TRAIL PLAN SHEET	F.A.U. RTE.	SECTION	COUNTY	TOTAL SHEETS	SHEET NO.
		DRAWN -	REVISED -			9166	34-IRS-3	ST. CLAIR	87	42
Johnson, Depp & Quisenberry CONSULTING ENGINEERS Springfield, Illinois	PLOT SCALE = 50.0000 ′ / IN.	CHECKED -	REVISED -					CONTRACT NO. 76D96		
	PLOT DATE = 12/15/2010 09:37:34	DATE -	REVISED -		SCALE: SHEET NO. OF SHEETS STA. 1185+00.00 TO STA. 1200+00.00		ILLINOIS	FED. AID PROJECT		

LEGEND

MILLING AND RESURFACING LIMITS

PROP. CURVE C17
PI STA. = 1199+79.20
Δ = 36° 26′ 00″ (LT)
D = 2° 51′ 00″
R = 2,010.38′
T = 661.63′
L = 1,278.36′
E = 106.07′
e = -----
T.R. = -----
S.E. RUN = -----
P.C. STA. = 1193+17.57
P.T. STA. = 1205+95.94

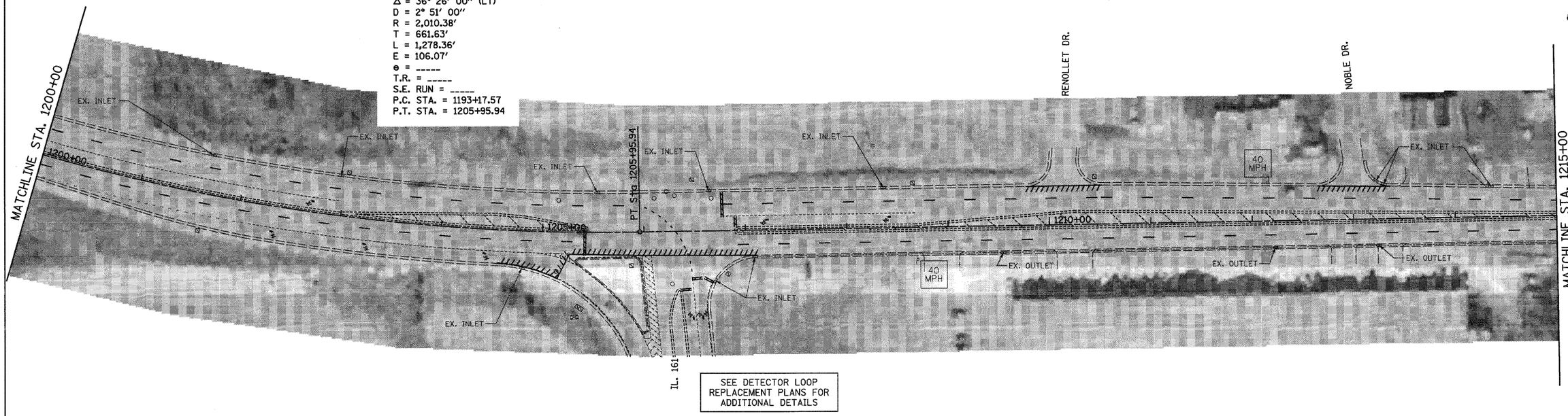

SEE DETECTOR LOOP REPLACEMENT PLANS FOR ADDITIONAL DETAILS

EXISTING & REMOVAL ITEMS

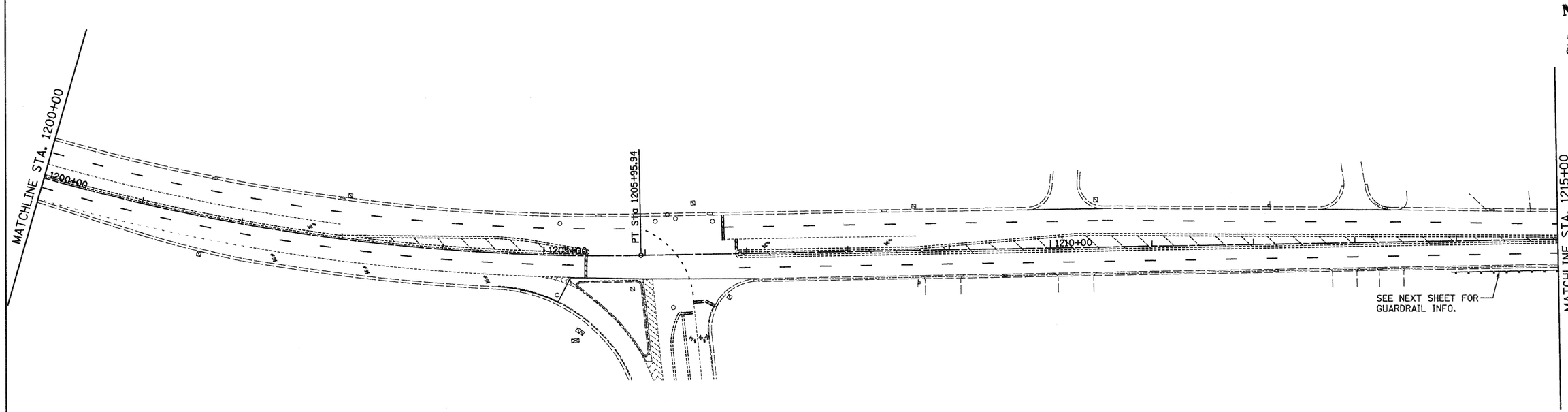

SEE NEXT SHEET FOR GUARDRAIL INFO.

50 0 50 100
SCALE IN FEET

PROPOSED IMPROVEMENTS

FILE NAME = ...\oadd\D876D96-sht-plan16.dgn	USER NAME = SJS	DESIGNED -	REVISED -	STATE OF ILLINOIS DEPARTMENT OF TRANSPORTATION
Johnson, Depp & Quisenberry CONSULTING ENGINEERS Springfield, Illinois		DRAWN -	REVISED -	
	PLOT SCALE = 50.0000 ′ / IN.	CHECKED -	REVISED -	
	PLOT DATE = 12/15/2010 09:37:48	DATE -	REVISED -	

ST. CLAIR AVE./LINCOLN TRAIL PLAN SHEET

SCALE: | SHEET NO. OF SHEETS | STA. 1200+00.00 TO STA. 1215+00.00

F.A.U. RTE.	SECTION	COUNTY	TOTAL SHEETS	SHEET NO.
9166	34-1RS-3	ST. CLAIR	87	43
		CONTRACT NO. 76D96		
		ILLINOIS FED. AID PROJECT		

LEGEND

MILLING AND RESURFACING LIMITS

REMOVAL ITEMS

REMOVE EXISTING CONCRETE MEDIAN (2' WIDE)
STA. 1217+81 TO STA. 1218+38
STA. 1218+97 TO STA. 1224+72
STA. 1225+65 TO STA. 1230+00

REMOVE GUTTER, (TY. A)
LT. STA. 1218+62 TO LT. STA. 1224+48
LT. STA. 1224+63 TO LT. STA. 1229+44
LT. STA. 1229+59 TO LT. STA. 1230+00

(SEE DETAIL FOR GAPPING EXISTING GUTTER OUTLETS)
LT. STA. 1224+48 TO LT. STA. 1224+63
LT. STA. 1229+44 TO LT. STA. 1229+59

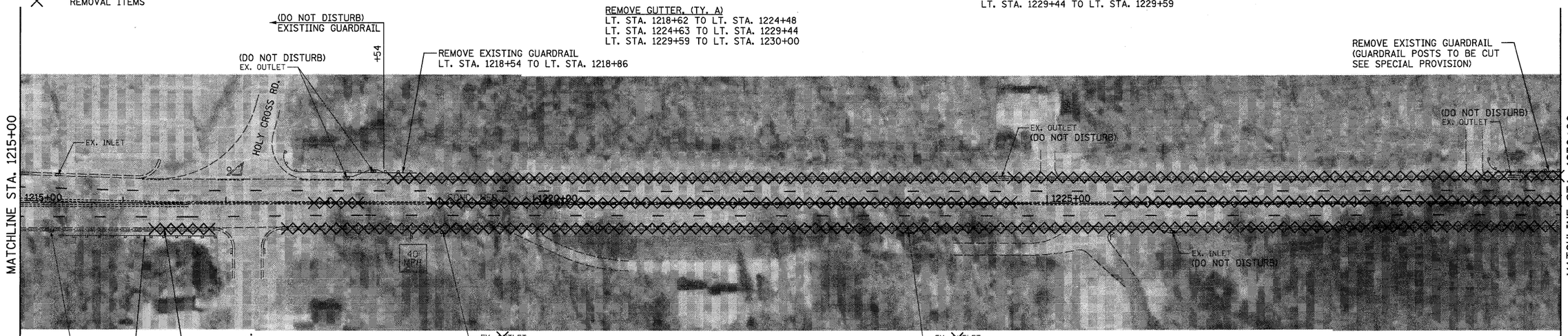

REMOVE GUTTER, (TY. A)
RT. STA. 1217+55 TO RT. STA. 1226+15
RT. STA. 1226+30 TO RT. STA. 1230+00

REMOVE EXISTING OUTLETS (DO NOT DISTURB EXISTING PIPE DRAINS)
(COST INCLUDED WITH GUTTER REMOVAL)
RT. STA. 1219+10
RT. STA. 1223+65

(SEE DETAIL FOR GAPPING EXISTING GUTTER OUTLETS)
RT. STA. 1226+15 TO RT. STA. 1226+30

EXISTING & REMOVAL ITEMS

PROPOSED GUARDRAIL (OFFSET 7')
LT. STA. 1218+54 TO LT. STA. 1220+04 (SPBGR. TY. A)
LT. STA. 1220+04 TO LT. STA. 1220+54 (T.B.T. TY. 1 SPL. TANG.)

NOTE: THE CONTRACTOR AND ENGINEER SHOULD BE AWARE THAT THE REPLACEMENT GUARDRAIL TO BE INSTALLED LT. STA. 1218+54 TO LT. STA. 1220+54 IS INTENDED TO MATCH THE EXISTING TYPE GUARDRAIL AT LT. STA. 1218+54, (AS SHOWN IN THE EXISTING GUARDRAIL DETAILS IN THE PLANS) BUT WITH AN APPROPRIATE TYPE 1 END SECTION. SEE THE SPECIAL PROVISION ON GUARDRAIL REMOVAL AND INSTALLATION.

CONSTRUCT CONCRETE GUTTER, (TY. A)
(FLUSH WITH HMA SURFACE)
LT. STA. 1218+62 TO LT. STA. 1224+48
LT. STA. 1224+63 TO LT. STA. 1229+44
LT. STA. 1229+59 TO LT. STA. 1230+00

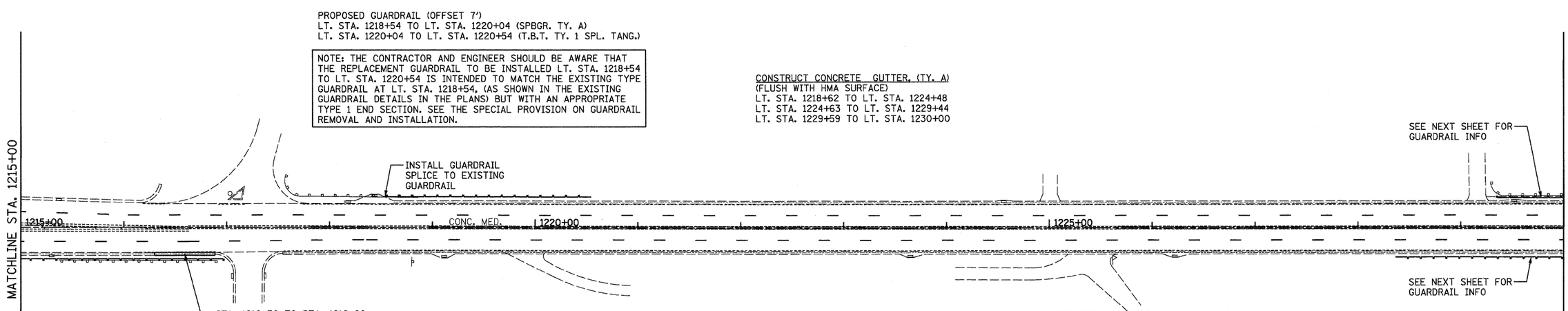

CONSTRUCT CONCRETE GUTTER, (TY. A)
(FLUSH WITH HMA SURFACE)
RT. STA. 1217+55 TO RT. STA. 1218+84
RT. STA. 1219+40 TO RT. STA. 1223+37
RT. STA. 1223+93 TO RT. STA. 1226+15
RT. STA. 1226+15 TO RT. STA. 1230+00

CONSTRUCT OUTLETS TYPE 2 FOR TYPE A GUTTER
(MATCH TO EXISTING CULVERT FLOWLINE)
RT. STA. 1218+84 TO RT. STA. 1219+40
RT. STA. 1223+37 TO RT. STA. 1223+93

GRATES AND COVERS, TYPE 2A
RT. STA. 1219+12
RT. STA. 1223+65

PROPOSED GUARDRAIL (OFFSET 6')
RT. STA. 1213+95 TO RT. STA. 1214+45 (T.B.T. TY. 1 SPL. TANG.)
RT. STA. 1214+45 TO RT. STA. 1216+82.5 (SPBGR. TY. A)
RT. STA. 1216+82.5 TO RT. STA. 1216+98 (T.B.T. TY. 2)

NOTE:
AT LOCATIONS WHERE THE EXISTING MEDIAN IS TO BE REMOVED, SEE TYPICAL SECTION FOR PAVEMENT STRUCTURE REPLACEMENT.

50 0 50 100
SCALE IN FEET

PROPOSED IMPROVEMENTS

FILE NAME = ...\cadd\D876D96-sht-plan17.dgn	USER NAME = JTH	DESIGNED -	REVISED -	STATE OF ILLINOIS DEPARTMENT OF TRANSPORTATION	ST. CLAIR AVE./LINCOLN TRAIL PLAN SHEET	F.A.U. RTE.	SECTION	COUNTY	TOTAL SHEETS / SHEET NO.
Johnson, Depp & Quisenberry CONSULTING ENGINEERS Springfield, Illinois		DRAWN -	REVISED -			9166	34-1RS-3	ST. CLAIR	87 / 44
	PLOT SCALE = 50.0000 ' / IN.	CHECKED -	REVISED -					CONTRACT NO. 76D96	
	PLOT DATE = 01/13/2011 13:17:35	DATE -	REVISED -		SCALE: SHEET NO. OF SHEETS STA. 1215+00.00 TO STA. 1230+00.00		ILLINOIS FED. AID PROJECT		

LEGEND

MILLING AND RESURFACING LIMITS

REMOVAL ITEMS

REMOVE EXISTING CONCRETE MEDIAN (2' WIDE)
STA. 1230+00 TO STA. 1236+28
STA. 1236+74 TO STA. 1238+83
STA. 1239+81 TO STA. 1243+57
STA. 1244+57 TO STA. 1245+00

REMOVE GUTTER, (TY. A)
LT. STA. 1230+00 TO LT. STA. 1236+21

REMOVE GUTTER, (TY. B)
LT. STA. 1236+36 TO LT. STA. 1241+14
LT. STA. 1241+24 TO LT. STA. 1245+00

(SEE DETAIL FOR GAPPING EXISTING GUTTER OUTLETS)
LT. STA. 1236+21 TO LT. STA. 1236+36
LT. STA. 1241+14 TO LT. STA. 1241+24

N

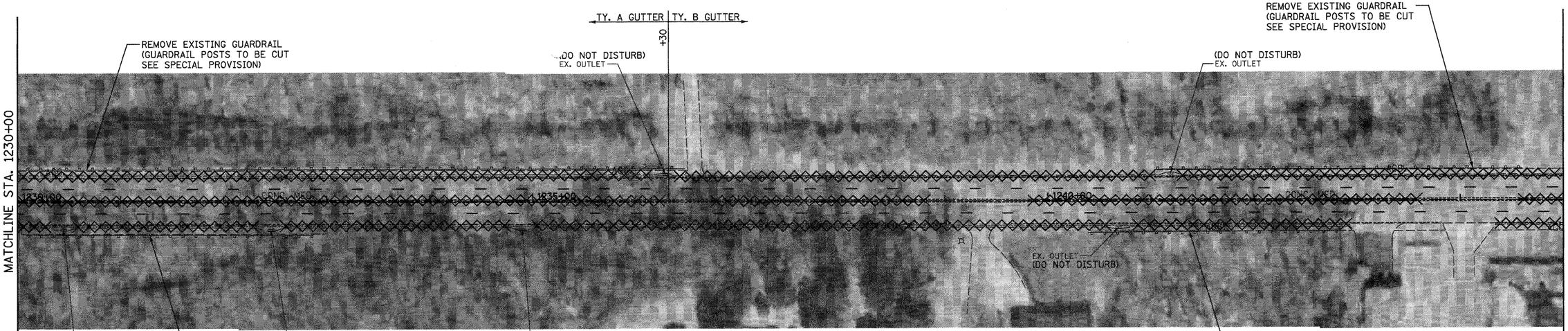

REMOVE GUTTER, (TY. A)
RT. STA. 1230+00 TO RT. STA. 1230+37
RT. STA. 1230+52 TO RT. STA. 1232+38
RT. STA. 1232+53 TO RT. STA. 1234+82
RT. STA. 1234+97 TO RT. STA. 1240+60
RT. STA. 1240+75 TO RT. STA. 1242+92

REMOVE GUTTER, (TY. B)
RT. STA. 1244+34 TO RT. STA. 1245+00

(SEE DETAIL FOR GAPPING EXISTING GUTTER OUTLETS)
RT. STA. 1230+37 TO RT. STA. 1230+52
RT. STA. 1232+38 TO RT. STA. 1232+53
RT. STA. 1234+82 TO RT. STA. 1234+97
RT. STA. 1240+60 TO RT. STA. 1240+75

EXISTING & REMOVAL ITEMS

N

CONSTRUCT CONCRETE GUTTER, (TY. A)
(FLUSH WITH HMA SURFACE)
LT. STA. 1230+00 TO LT. STA. 1236+21

CONSTRUCT CONCRETE GUTTER, (TY. B)
(FLUSH WITH HMA SURFACE)
LT. STA. 1236+36 TO LT. STA. 1241+14
LT. STA. 1241+24 TO LT. STA. 1245+00

PROPOSED GUARDRAIL (OFFSET 6')
LT. STA. 1229+34 TO LT. STA. 1229+49 (T.B.T. TY. 2)
LT. STA. 1229+49 TO LT. STA. 1235+86.5 (SPBGR. TY. A)
LT. STA. 1235+86.5 TO LT. STA. 1236+36.5 (T.B.T. TY. 1 SPL. TANG.)

PROPOSED GUARDRAIL (OFFSET 6')
LT. STA. 1241+25 TO LT. STA. 1241+40 (T.B.T. TY. 2)
LT. STA. 1241+40 TO LT. STA. 1244+90 (SPBGR. TY. A)
LT. STA. 1244+90 TO LT. STA. 1245+40 (T.B.T. TY. 1 SPL. TANG.)

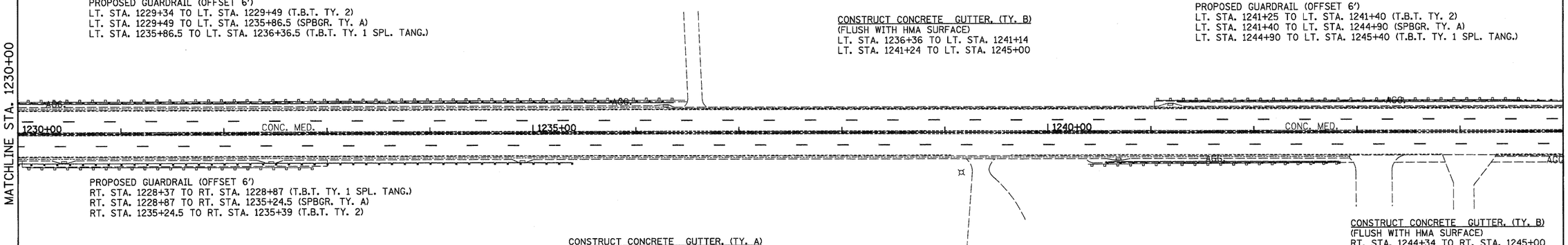

PROPOSED GUARDRAIL (OFFSET 6')
RT. STA. 1228+37 TO RT. STA. 1228+87 (T.B.T. TY. 1 SPL. TANG.)
RT. STA. 1228+87 TO RT. STA. 1235+24.5 (SPBGR. TY. A)
RT. STA. 1235+24.5 TO RT. STA. 1235+39 (T.B.T. TY. 2)

CONSTRUCT CONCRETE GUTTER, (TY. A)
(FLUSH WITH HMA SURFACE)
RT. STA. 1230+00 TO RT. STA. 1230+37
RT. STA. 1230+52 TO RT. STA. 1232+38
RT. STA. 1232+53 TO RT. STA. 1234+82
RT. STA. 1234+97 TO RT. STA. 1240+60
RT. STA. 1240+75 TO RT. STA. 1242+92

CONSTRUCT CONCRETE GUTTER, (TY. B)
(FLUSH WITH HMA SURFACE)
RT. STA. 1244+34 TO RT. STA. 1245+00

PROPOSED GUARDRAIL (OFFSET 6')
RT. STA. 1239+56 TO RT. STA. 1240+06 (T.B.T. TY. 1 SPL. TANG.)
RT. STA. 1240+06 TO RT. STA. 1242+68.5 (SPBGR. TY. A)
RT. STA. 1242+68.5 TO RT. STA. 1242+84 (T.B.T. TY. 2)

NOTE:
AT LOCATIONS WHERE THE EXISTING MEDIAN IS TO BE REMOVED, SEE TYPICAL SECTION FOR PAVEMENT STRUCTURE REPLACEMENT.

50 0 50 100
SCALE IN FEET

PROPOSED IMPROVEMENTS

FILE NAME = ...\oadd\D876D96-sht-plan18.dgn	USER NAME = SJS	DESIGNED -	REVISED -	STATE OF ILLINOIS DEPARTMENT OF TRANSPORTATION	ST. CLAIR AVE./LINCOLN TRAIL PLAN SHEET	F.A.U. RTE.	SECTION	COUNTY	TOTAL SHEETS	SHEET NO.
		DRAWN -	REVISED -			9166	34-1RS-3	ST. CLAIR	87	45
Johnson, Depp & Quisenberry CONSULTING ENGINEERS Springfield, Illinois	PLOT SCALE = 50.0000 ' / IN.	CHECKED -	REVISED -			CONTRACT NO. 76D96				
	PLOT DATE = 12/15/2010 09:38:16	DATE -	REVISED -		SCALE: SHEET NO. OF SHEETS STA. 1230+00.00 TO STA. 1245+00.00	ILLINOIS FED. AID PROJECT				

LEGEND

MILLING AND RESURFACING LIMITS

REMOVAL ITEMS

REMOVE EXISTING CONCRETE MEDIAN (2' WIDE)
STA. 1245+00 TO STA. 1245+28
STA. 1246+28 TO STA. 1247+70
STA. 1248+29 TO STA. 1260+00

REMOVE GUTTER, (TY. B)
LT. STA. 1245+00 TO LT. STA. 1252+65
LT. STA. 1252+75 TO LT. STA. 1254+85

(SEE DETAIL FOR GAPPING EXISTING GUTTER OUTLETS)
LT. STA. 1252+65 TO LT. STA. 1252+75
LT. STA. 1254+85 TO LT. STA. 1254+95

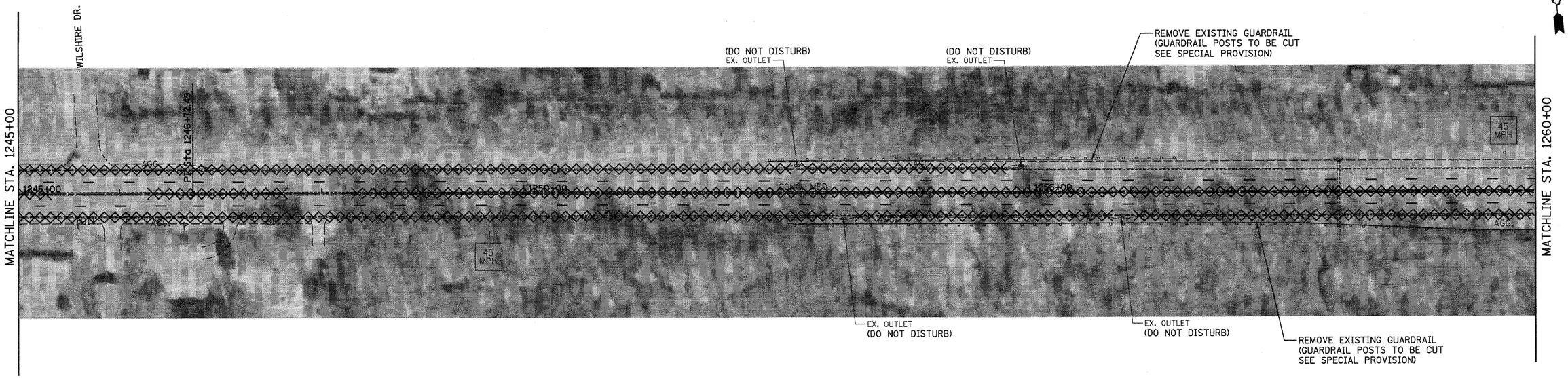

REMOVE GUTTER, (TY. B)
RT. STA. 1245+00 TO RT. STA. 1253+10
RT. STA. 1253+20 TO RT. STA. 1255+85
RT. STA. 1255+95 TO RT. STA. 1260+00

(SEE DETAIL FOR GAPPING EXISTING GUTTER OUTLETS)
RT. STA. 1253+10 TO RT. STA. 1253+20
RT. STA. 1255+85 TO RT. STA. 1255+95

EXISTING & REMOVAL ITEMS

CONSTRUCT CONCRETE GUTTER, (TY. B)
(FLUSH WITH HMA SURFACE)
LT. STA. 1245+00 TO LT. STA. 1252+65
LT. STA. 1252+75 TO LT. STA. 1254+85

PROPOSED GUARDRAIL (OFFSET 6')
LT. STA. 1252+84 TO LT. STA. 1252+98 (T.B.T. TY. 2)
LT. STA. 1252+98 TO LT. STA. 1257+35.5 (SPBGR. TY. A)
LT. STA. 1257+35.5 TO LT. STA. 1257+85.5 (T.B.T. TY. 1 SPL. TANG.)

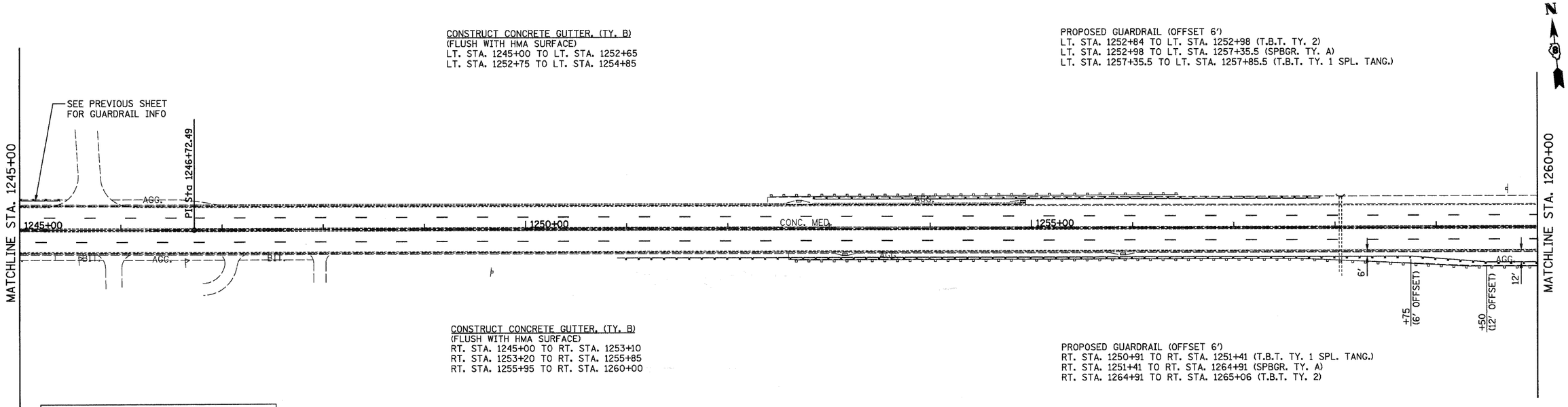

CONSTRUCT CONCRETE GUTTER, (TY. B)
(FLUSH WITH HMA SURFACE)
RT. STA. 1245+00 TO RT. STA. 1253+10
RT. STA. 1253+20 TO RT. STA. 1255+85
RT. STA. 1255+95 TO RT. STA. 1260+00

PROPOSED GUARDRAIL (OFFSET 6')
RT. STA. 1250+91 TO RT. STA. 1251+41 (T.B.T. TY. 1 SPL. TANG.)
RT. STA. 1251+41 TO RT. STA. 1264+91 (SPBGR. TY. A)
RT. STA. 1264+91 TO RT. STA. 1265+06 (T.B.T. TY. 2)

NOTE:
AT LOCATIONS WHERE THE EXISTING MEDIAN IS TO BE REMOVED, SEE TYPICAL SECTION FOR PAVEMENT STRUCTURE REPLACEMENT.

50 0 50 100
SCALE IN FEET

PROPOSED IMPROVEMENTS

FILE NAME = ...\oadd\D876D96-sht-plan19.dgn	USER NAME = SJS	DESIGNED -	REVISED -	STATE OF ILLINOIS DEPARTMENT OF TRANSPORTATION
Johnson, Depp & Quisenberry CONSULTING ENGINEERS Springfield, Illinois		DRAWN -	REVISED -	
	PLOT SCALE = 50.0000 ' / IN.	CHECKED -	REVISED -	
	PLOT DATE = 12/15/2010 09:38:30	DATE -	REVISED -	

ST. CLAIR AVE./LINCOLN TRAIL PLAN SHEET

SCALE: | SHEET NO. OF SHEETS | STA. 1245+00.00 TO STA. 1260+00.00

F.A.U. RTE.	SECTION	COUNTY	TOTAL SHEETS	SHEET NO.
9166	34-1RS-3	ST. CLAIR	87	46
		CONTRACT NO. 76D96		
		ILLINOIS FED. AID PROJECT		

LEGEND

MILLING AND RESURFACING LIMITS

REMOVAL ITEMS

REMOVE EXISTING CONCRETE MEDIAN (2' WIDE)
STA. 1260+00 TO STA. 1261+11
STA. 1262+14 TO STA. 1266+90
STA. 1267+50 TO STA. 1273+18
STA. 1273+79 TO STA. 1275+00

REMOVE GUTTER, (TY. B)
LT. STA. 1262+75 TO LT. STA. 1266+03
LT. STA. 1266+13 TO LT. STA. 1271+30

(SEE DETAIL FOR GAPPING EXISTING GUTTER OUTLETS)
LT. STA. 1262+65 TO LT. STA. 1262+75
LT. STA. 1266+03 TO LT. STA. 1266+13

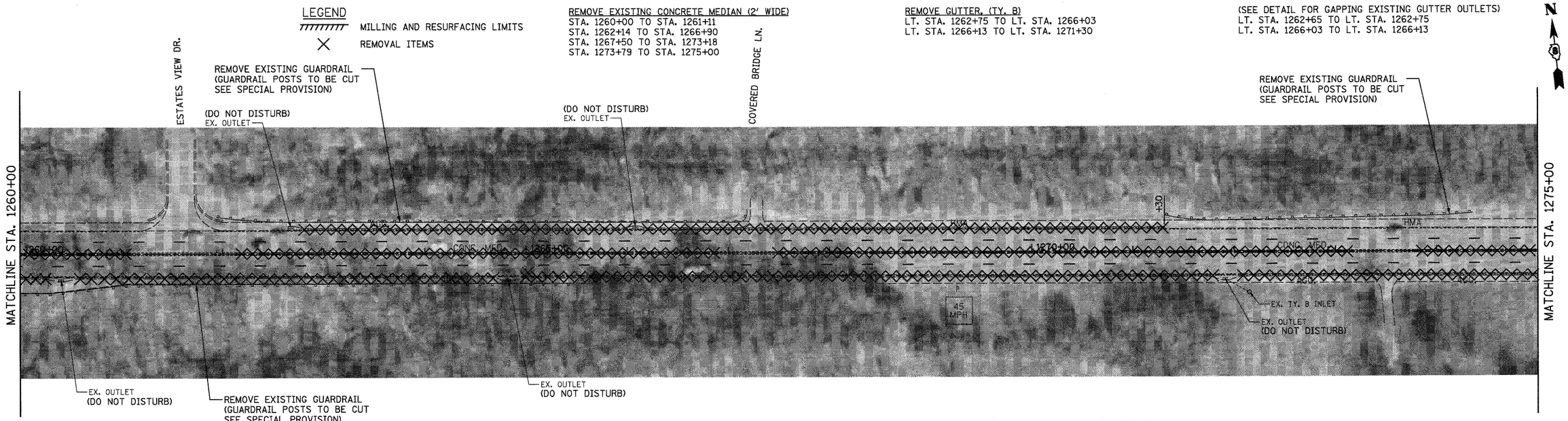

REMOVE GUTTER, (TY. B)
RT. STA. 1260+00 TO RT. STA. 1260+35
RT. STA. 1260+40 TO RT. STA. 1264+83
RT. STA. 1264+93 TO RT. STA. 1271+86
RT. STA. 1271+96 TO RT. STA. 1275+00

(SEE DETAIL FOR GAPPING EXISTING GUTTER OUTLETS)
RT. STA. 1260+35 TO RT. STA. 1260+40
RT. STA. 1264+83 TO RT. STA. 1264+93
RT. STA. 1271+86 TO RT. STA. 1271+96

EXISTING & REMOVAL ITEMS

PROPOSED GUARDRAIL (OFFSET 6')
LT. STA. 1262+48 TO LT. STA. 1262+62 (T.B.T. TY. 2)
LT. STA. 1262+62 TO LT. STA. 1266+62 (SPBGR. TY. A)
LT. STA. 1266+62 TO LT. STA. 1267+12 (T.B.T. TY. 1 SPL. TANG.)

CONSTRUCT CONCRETE GUTTER, (TY. B)
(FLUSH WITH HMA SURFACE)
LT. STA. 1262+75 TO LT. STA. 1266+03
LT. STA. 1266+13 TO LT. STA. 1271+30

PROPOSED GUARDRAIL (OFFSET 8')
LT. STA. 1271+55 TO LT. STA. 1271+70 (T.B.T. TY. 2)
LT. STA. 1271+70 TO LT. STA. 1274+45 (SPBGR. TY. A)
LT. STA. 1274+45 TO LT. STA. 1274+95 (T.B.T. TY. 1 SPL. TANG.)

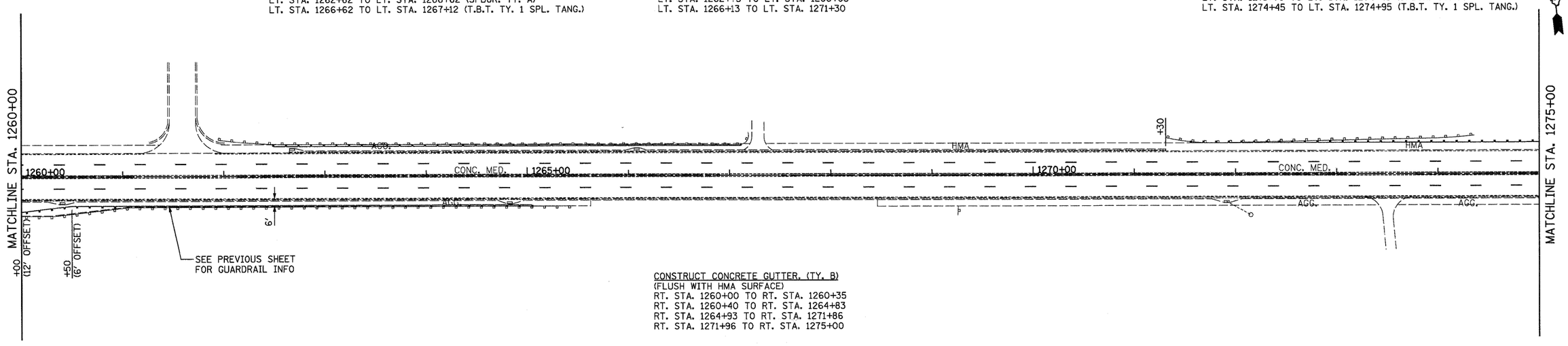

CONSTRUCT CONCRETE GUTTER, (TY. B)
(FLUSH WITH HMA SURFACE)
RT. STA. 1260+00 TO RT. STA. 1260+35
RT. STA. 1260+40 TO RT. STA. 1264+83
RT. STA. 1264+93 TO RT. STA. 1271+86
RT. STA. 1271+96 TO RT. STA. 1275+00

NOTE:
AT LOCATIONS WHERE THE EXISTING MEDIAN IS TO BE REMOVED, SEE TYPICAL SECTION FOR PAVEMENT STRUCTURE REPLACEMENT.

50 0 50 100
SCALE IN FEET

PROPOSED IMPROVEMENTS

FILE NAME = ...\oadd\D876D96-sht-plan20.dgn	USER NAME = SJS	DESIGNED -	REVISED -	STATE OF ILLINOIS DEPARTMENT OF TRANSPORTATION	ST. CLAIR AVE./LINCOLN TRAIL PLAN SHEET	F.A.U. RTE.	SECTION	COUNTY	TOTAL SHEETS / SHEET NO.
Johnson, Depp & Quisenberry CONSULTING ENGINEERS Springfield, Illinois		DRAWN -	REVISED -			9166	34-1RS-3	ST. CLAIR	87 / 47
	PLOT SCALE = 50.0000 ' / IN.	CHECKED -	REVISED -					CONTRACT NO. 76D96	
	PLOT DATE = 12/15/2010 09:38:44	DATE -	REVISED -		SCALE: SHEET NO. OF SHEETS STA. 1260+00.00 TO STA. 1275+00.00		ILLINOIS FED. AID PROJECT		

LEGEND

MILLING AND RESURFACING LIMITS

REMOVAL ITEMS

REMOVE EXISTING CONCRETE MEDIAN (2' WIDE)
STA. 1275+00 TO STA. 1277+71
STA. 1278+73 TO STA. 1283+24
STA. 1283+84 TO STA. 1285+64
STA. 1286+64 TO STA. 1290+00

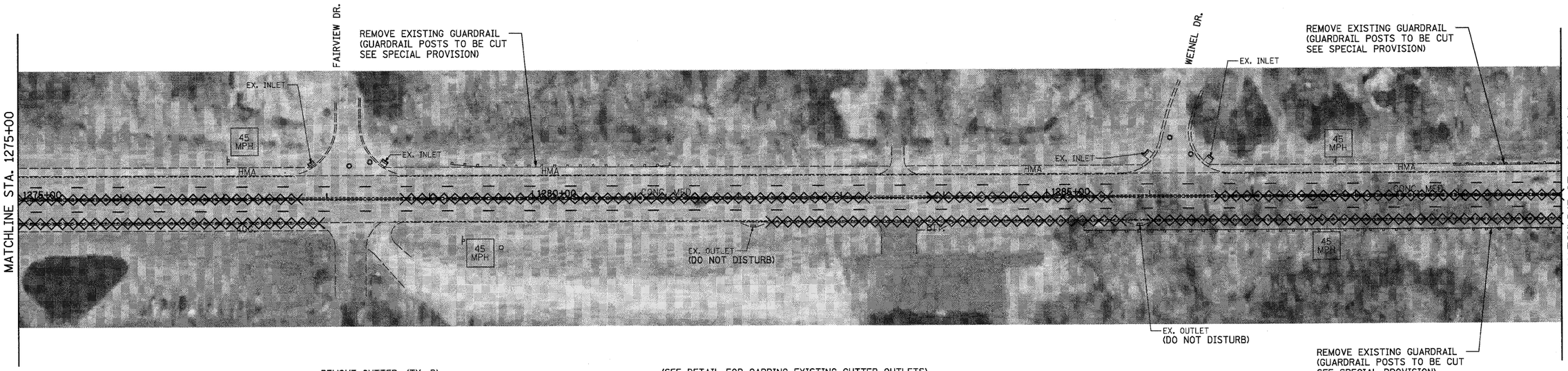

REMOVE GUTTER, (TY. B)
RT. STA. 1275+00 TO RT. STA. 1277+92
RT. STA. 1282+20 TO RT. STA. 1285+85
RT. STA. 1285+95 TO RT. STA. 1290+00

(SEE DETAIL FOR GAPPING EXISTING GUTTER OUTLETS)
RT. STA. 1282+10 TO RT. STA. 1282+20
RT. STA. 1285+85 TO RT. STA. 1285+95

EXISTING & REMOVAL ITEMS

PROPOSED GUARDRAIL (OFFSET 8')
LT. STA. 1279+42 TO LT. STA. 1279+57 (T.B.T. TY. 2)
LT. STA. 1279+57 TO LT. STA. 1282+07 (SPBGR. TY. A)
LT. STA. 1282+07 TO LT. STA. 1282+57 (T.B.T. TY. 1 SPL. TANG.)

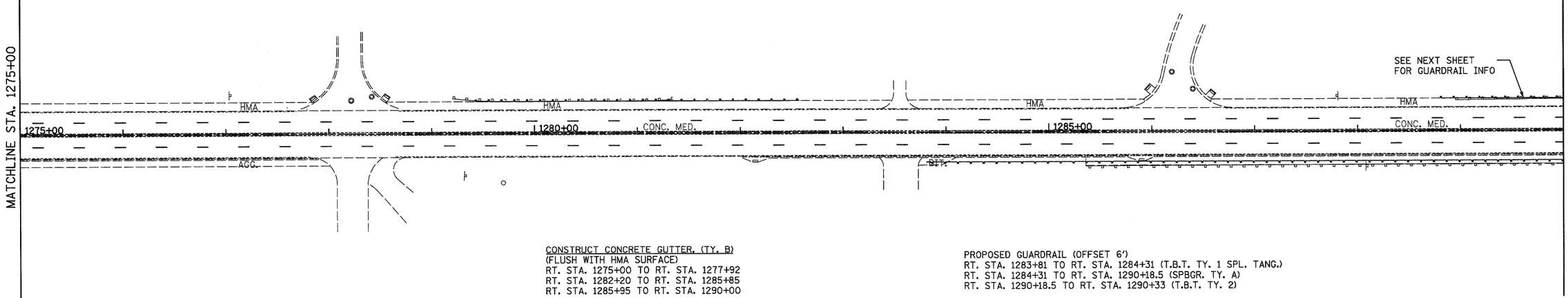

CONSTRUCT CONCRETE GUTTER, (TY. B)
(FLUSH WITH HMA SURFACE)
RT. STA. 1275+00 TO RT. STA. 1277+92
RT. STA. 1282+20 TO RT. STA. 1285+85
RT. STA. 1285+95 TO RT. STA. 1290+00

PROPOSED GUARDRAIL (OFFSET 6')
RT. STA. 1283+81 TO RT. STA. 1284+31 (T.B.T. TY. 1 SPL. TANG.)
RT. STA. 1284+31 TO RT. STA. 1290+18.5 (SPBGR. TY. A)
RT. STA. 1290+18.5 TO RT. STA. 1290+33 (T.B.T. TY. 2)

NOTE:
AT LOCATIONS WHERE THE EXISTING MEDIAN IS TO BE REMOVED, SEE TYPICAL SECTION FOR PAVEMENT STRUCTURE REPLACEMENT.

50 0 50 100
SCALE IN FEET

PROPOSED IMPROVEMENTS

FILE NAME = ...\oadd\D876D96-sht-plan21.dgn	USER NAME = SJS	DESIGNED -	REVISED -	STATE OF ILLINOIS DEPARTMENT OF TRANSPORTATION	ST. CLAIR AVE./LINCOLN TRAIL PLAN SHEET	F.A.U. RTE.	SECTION	COUNTY	TOTAL SHEETS / SHEET NO.
Johnson, Depp & Quisenberry CONSULTING ENGINEERS Springfield, Illinois		DRAWN -	REVISED -			9166	34-1RS-3	ST. CLAIR	87 / 48
	PLOT SCALE = 50.0000 ' / IN.	CHECKED -	REVISED -					CONTRACT NO. 76D96	
	PLOT DATE = 12/15/2010 09:38:57	DATE -	REVISED -		SCALE: SHEET NO. OF SHEETS STA. 1275+00.00 TO STA. 1290+00.00		ILLINOIS FED. AID PROJECT		

LEGEND

MILLING AND RESURFACING LIMITS

REMOVAL ITEMS

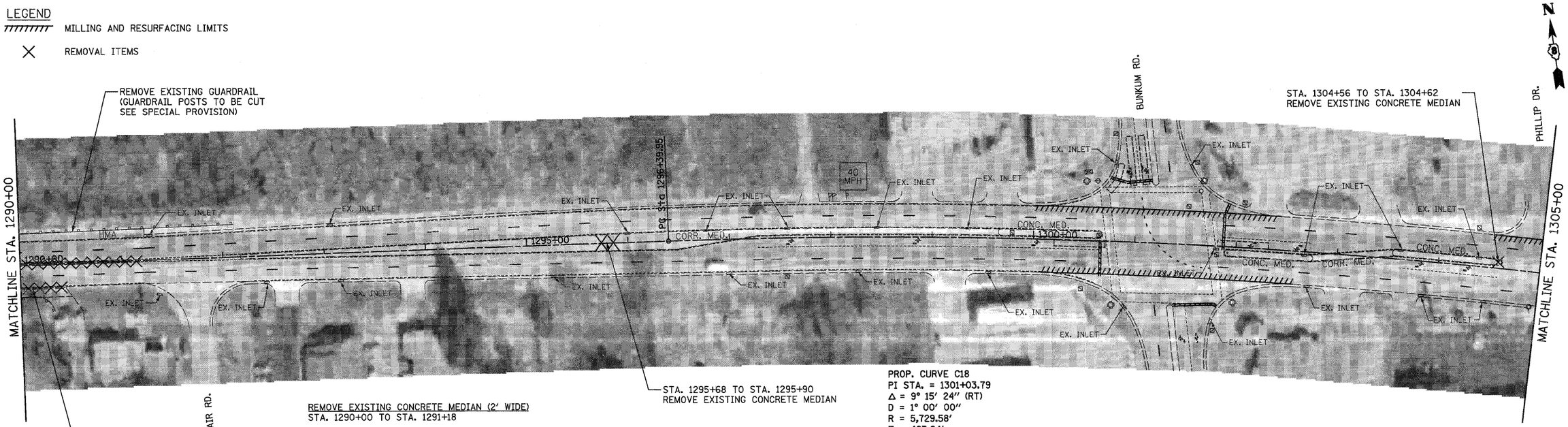

REMOVE EXISTING CONCRETE MEDIAN (2' WIDE)
STA. 1290+00 TO STA. 1291+18

REMOVE GUTTER, (TY. B)
RT. STA. 1290+00 TO RT. STA. 1290+45

PROP. CURVE C18
PI STA. = 1301+03.79
Δ = 9° 15' 24" (RT)
D = 1° 00' 00"
R = 5,729.58'
T = 463.84'
L = 925.67'
E = 18.74'
e = -----
T.R. = -----
S.E. RUN = -----
P.C. STA. = 1296+39.95
P.T. STA. = 1305+65.62

EXISTING & REMOVAL ITEMS

PROPOSED GUARDRAIL (OFFSET 8')
LT. STA. 1288+80 TO LT. STA. 1288+95 (T.B.T. TY. 2)
LT. STA. 1288+95 TO LT. STA. 1293+07.5 (SPBGR. TY. A)
LT. STA. 1293+07.5 TO LT. STA. 1293+57.5 (T.B.T. TY. 1 SPL. TANG.)

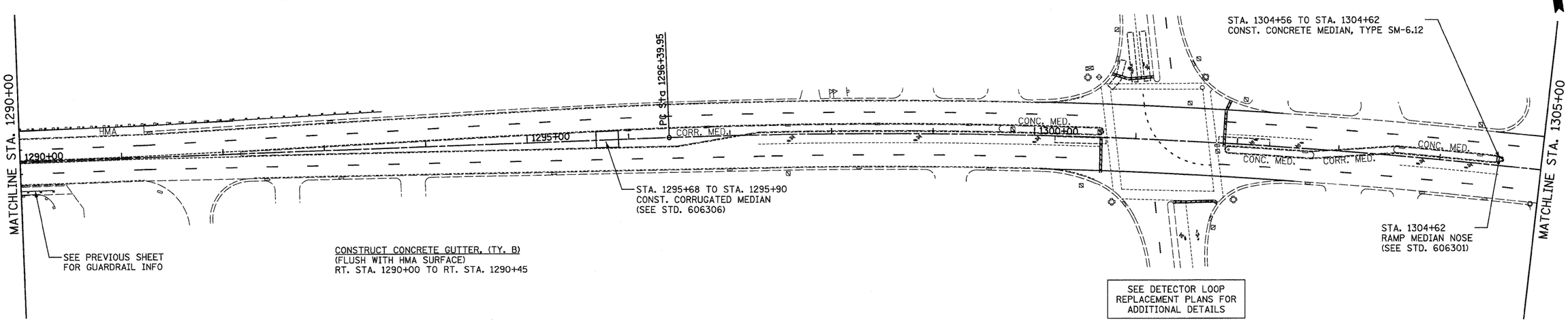

CONSTRUCT CONCRETE GUTTER, (TY. B)
(FLUSH WITH HMA SURFACE)
RT. STA. 1290+00 TO RT. STA. 1290+45

SEE DETECTOR LOOP REPLACEMENT PLANS FOR ADDITIONAL DETAILS

NOTE:
AT LOCATIONS WHERE THE EXISTING MEDIAN IS TO BE REMOVED, SEE TYPICAL SECTION FOR PAVEMENT STRUCTURE REPLACEMENT.

50 0 50 100
SCALE IN FEET

PROPOSED IMPROVEMENTS

FILE NAME = ...\cadd\D876D96-sht-plan-22.dgn	USER NAME = SJS	DESIGNED -	REVISED -	STATE OF ILLINOIS DEPARTMENT OF TRANSPORTATION	ST. CLAIR AVE./LINCOLN TRAIL PLAN SHEET	F.A.U. RTE.	SECTION	COUNTY	TOTAL SHEETS / SHEET NO.
Johnson, Depp & Quisenberry CONSULTING ENGINEERS Springfield, Illinois		DRAWN -	REVISED -			9166	34-1RS-3	ST. CLAIR	87 / 49
	PLOT SCALE = 50.0000 ' / IN.	CHECKED -	REVISED -					CONTRACT NO. 76D96	
	PLOT DATE = 12/15/2010 09:39:11	DATE -	REVISED -		SCALE: SHEET NO. OF SHEETS STA. 1290+00.00 TO STA. 1305+00.00		ILLINOIS FED. AID PROJECT		

LEGEND

MILLING AND RESURFACING LIMITS

REMOVAL ITEMS

PROP. CURVE C19
PI STA. = 1314+76.60
Δ = 13° 11′ 27″ (LT)
D = 1° 15′ 00″
R = 4,583.66′
T = 529.98′
L = 1,055.27′
E = 30.54′
e = -----
T.R. = -----
S.E. RUN = -----
P.C. STA. = 1309+46.63
P.T. STA. = 1320+01.89

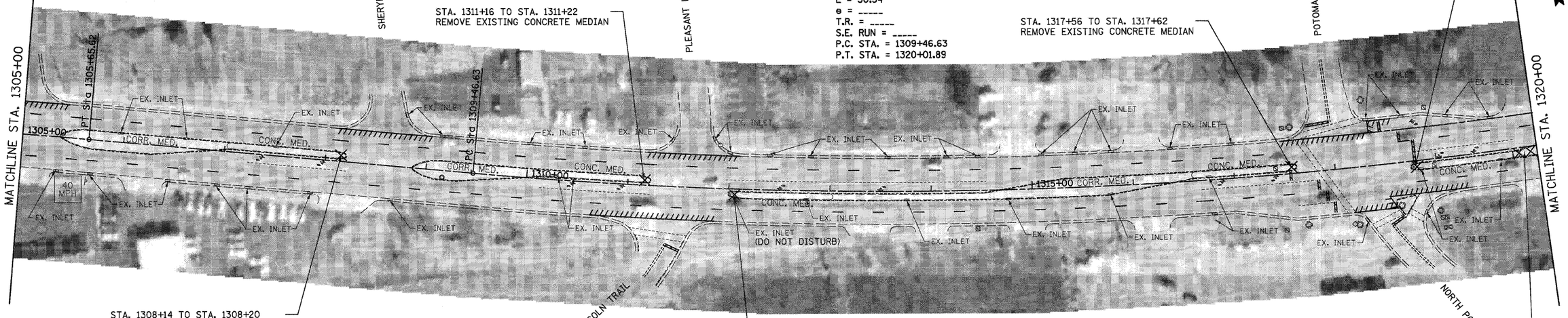

EXISTING & REMOVAL ITEMS

SEE DETECTOR LOOP REPLACEMENT PLANS FOR ADDITIONAL DETAILS

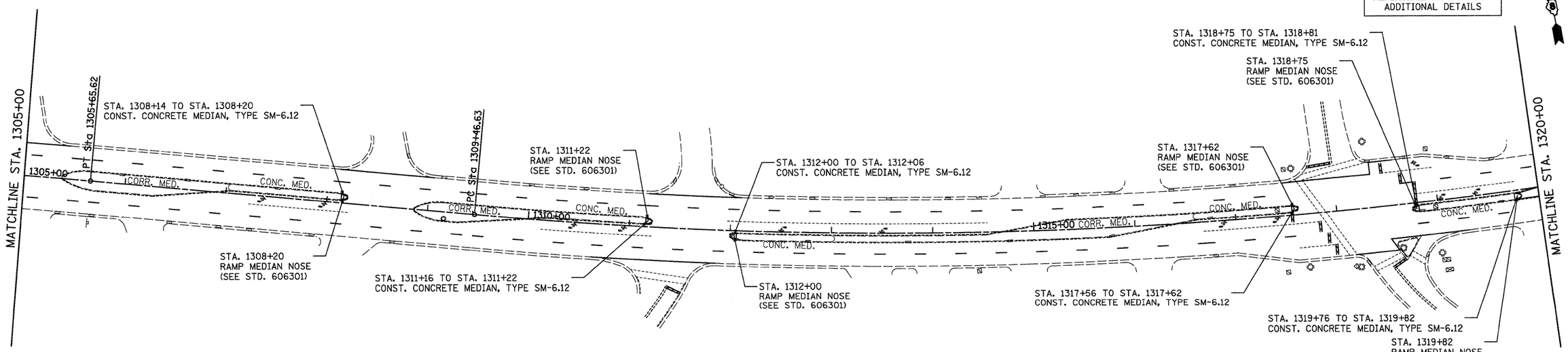

NOTE:
AT LOCATIONS WHERE THE EXISTING MEDIAN IS TO BE REMOVED, SEE TYPICAL SECTION FOR PAVEMENT STRUCTURE REPLACEMENT. SEE STRIPING PLANS.

PROPOSED IMPROVEMENTS

FILE NAME = ...\cadd\D876D96-sht-plan23.dgn	USER NAME = SJS	DESIGNED -	REVISED -	STATE OF ILLINOIS DEPARTMENT OF TRANSPORTATION	ST. CLAIR AVE./LINCOLN TRAIL PLAN SHEET	F.A.U. RTE.	SECTION	COUNTY	TOTAL SHEETS / SHEET NO.
Johnson, Depp & Quisenberry CONSULTING ENGINEERS Springfield, Illinois		DRAWN -	REVISED -			9166	34-1RS-3	ST. CLAIR	87 / 50
	PLOT SCALE = 50.0000 ′ / IN.	CHECKED -	REVISED -					CONTRACT NO. 76D96	
	PLOT DATE = 12/15/2010 09:39:25	DATE -	REVISED -		SCALE: SHEET NO. OF SHEETS STA. 1305+00.00 TO STA. 1320+00.00		ILLINOIS FED. AID PROJECT		

LEGEND

MILLING AND RESURFACING LIMITS

REMOVAL ITEMS

REMOVE EXISTING CONCRETE MEDIAN
STA. 1320+00 TO STA. 1327+63
STA. 1328+40 TO STA. 1332+28
STA. 1333+10 TO STA. 1335+00

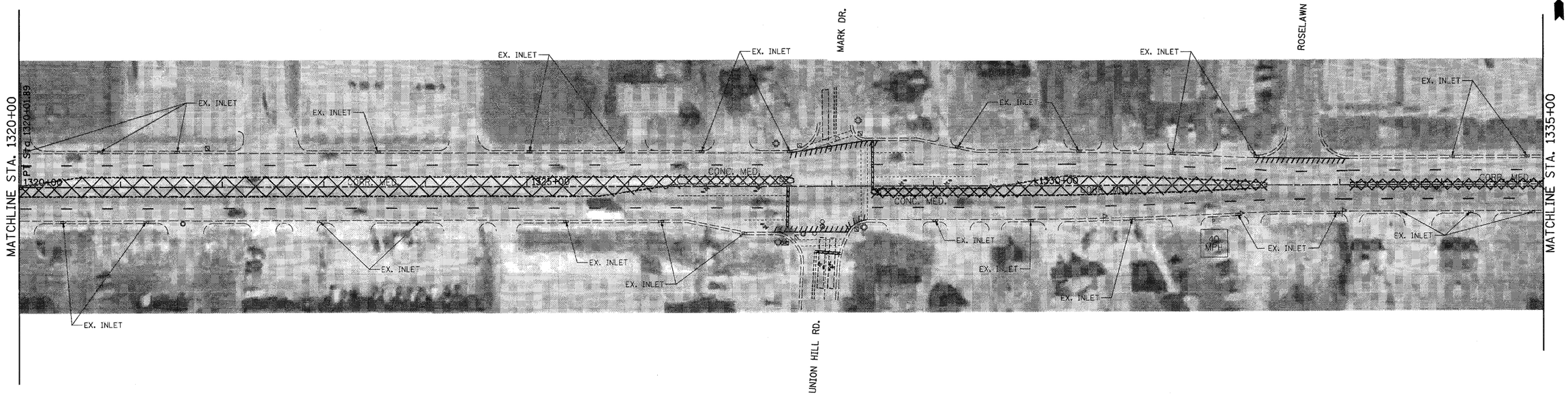

EXISTING & REMOVAL ITEMS

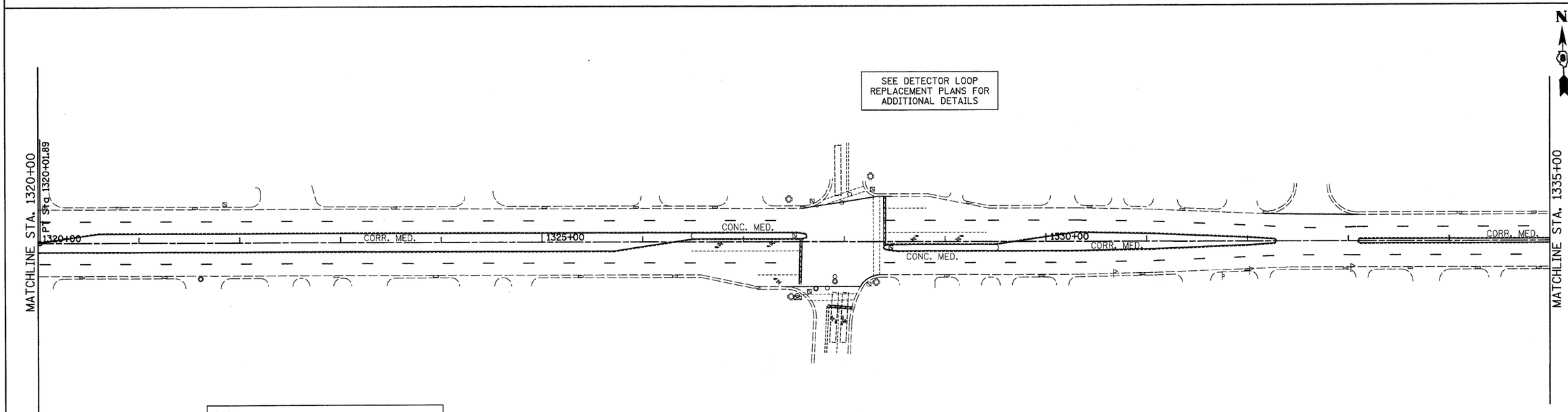

NOTE:
AT LOCATIONS WHERE THE EXISTING MEDIAN IS TO BE REMOVED, SEE TYPICAL SECTION FOR PAVEMENT STRUCTURE REPLACEMENT. SEE STRIPING PLANS.

50 0 50 100
SCALE IN FEET

PROPOSED IMPROVEMENTS

FILE NAME = ...\cadd\D876D96-sht-plan24.dgn	USER NAME = SJS	DESIGNED -	REVISED -
Johnson, Depp & Quisenberry CONSULTING ENGINEERS Springfield, Illinois		DRAWN -	REVISED -
	PLOT SCALE = 50.0000 ' / IN.	CHECKED -	REVISED -
	PLOT DATE = 12/15/2010 09:39:38	DATE -	REVISED -

STATE OF ILLINOIS
DEPARTMENT OF TRANSPORTATION

ST. CLAIR AVE./LINCOLN TRAIL PLAN SHEET

SCALE: | SHEET NO. OF SHEETS | STA. 1320+00.00 TO STA. 1335+00.00

F.A.U. RTE.	SECTION	COUNTY	TOTAL SHEETS	SHEET NO.
9166	34-1RS-3	ST. CLAIR	87	51

CONTRACT NO. 76D96

ILLINOIS FED. AID PROJECT

LEGEND

MILLING AND RESURFACING LIMITS

REMOVAL ITEMS

REMOVE EXISTING CONCRETE MEDIAN
STA. 1335+00 TO STA. 1340+55
STA. 1341+76 TO STA. 1345+13
STA. 1345+85 TO STA. 1348+33
STA. 1349+29 TO STA. 1350+00

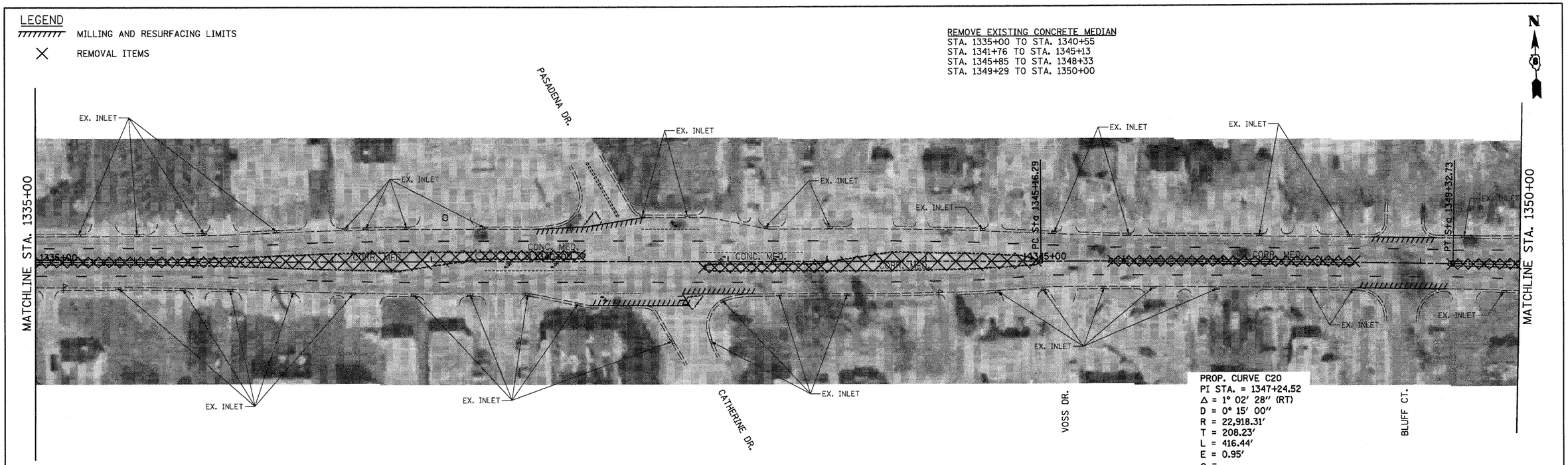

PROP. CURVE C20
PI STA. = 1347+24.52
Δ = 1° 02′ 28″ (RT)
D = 0° 15′ 00″
R = 22,918.31′
T = 208.23′
L = 416.44′
E = 0.95′
e = -----
T.R. = -----
S.E. RUN = -----
P.C. STA. = 1345+16.29
P.T. STA. = 1349+32.73

EXISTING & REMOVAL ITEMS

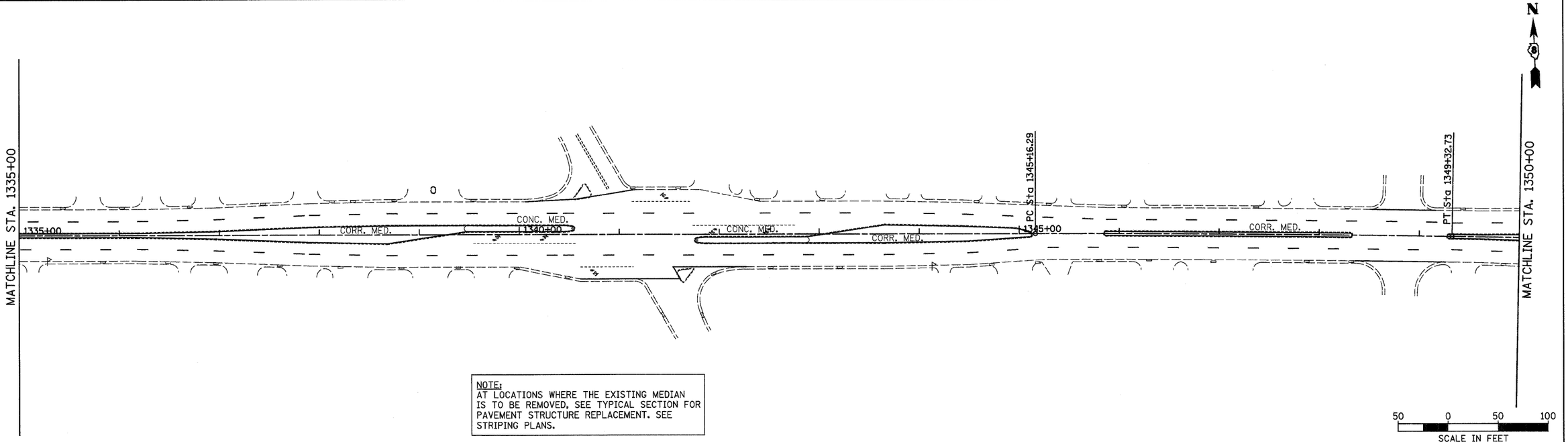

NOTE:
AT LOCATIONS WHERE THE EXISTING MEDIAN IS TO BE REMOVED, SEE TYPICAL SECTION FOR PAVEMENT STRUCTURE REPLACEMENT. SEE STRIPING PLANS.

PROPOSED IMPROVEMENTS

FILE NAME = ...\cadd\D876D96-sht-plan25.dgn	USER NAME = SJS	DESIGNED -	REVISED -	STATE OF ILLINOIS DEPARTMENT OF TRANSPORTATION	ST. CLAIR AVE./LINCOLN TRAIL PLAN SHEET	F.A.U. RTE.	SECTION	COUNTY	TOTAL SHEETS / SHEET NO.
		DRAWN -	REVISED -			9166	34-1RS-3	ST. CLAIR	87 / 52
Johnson, Depp & Quisenberry CONSULTING ENGINEERS Springfield, Illinois	PLOT SCALE = 50.0000 ′ / IN.	CHECKED -	REVISED -					CONTRACT NO. 76D96	
	PLOT DATE = 12/15/2010 09:39:52	DATE -	REVISED -		SCALE: SHEET NO. OF SHEETS STA. 1335+00.00 TO STA. 1350+00.00		ILLINOIS FED. AID PROJECT		

LEGEND

MILLING AND RESURFACING LIMITS

REMOVAL ITEMS

REMOVE EXISTING CONCRETE MEDIAN
STA. 1350+00 TO STA. 1353+92
STA. 1354+70 TO STA. 1359+42
STA. 1360+40 TO STA. 1365+00

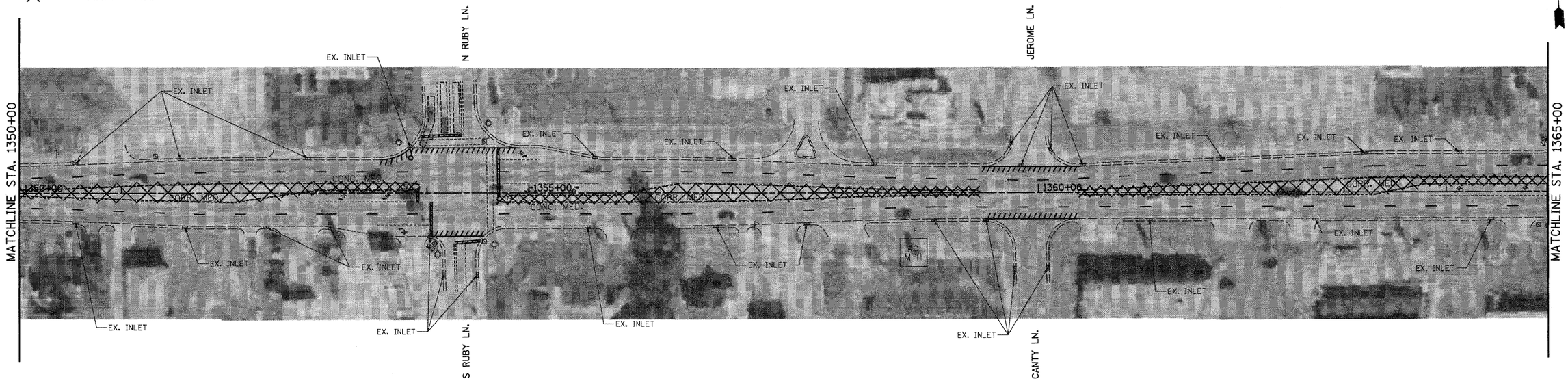

EXISTING & REMOVAL ITEMS

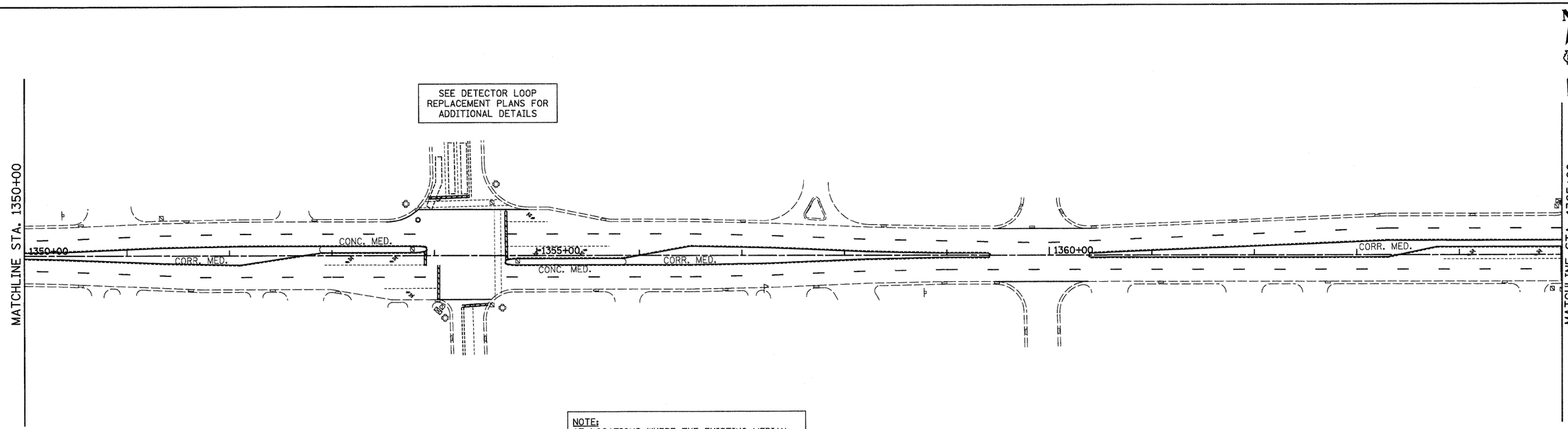

NOTE:
AT LOCATIONS WHERE THE EXISTING MEDIAN IS TO BE REMOVED, SEE TYPICAL SECTION FOR PAVEMENT STRUCTURE REPLACEMENT. SEE STRIPING PLANS.

50 0 50 100
SCALE IN FEET

PROPOSED IMPROVEMENTS

FILE NAME = ...\cadd\D876D96-sht-plan26.dgn	USER NAME = SJS	DESIGNED -	REVISED -	STATE OF ILLINOIS DEPARTMENT OF TRANSPORTATION	ST. CLAIR AVE./LINCOLN TRAIL PLAN SHEET	F.A.U. RTE.	SECTION	COUNTY	TOTAL SHEETS / SHEET NO.
		DRAWN -	REVISED -			9166	34-1RS-3	ST. CLAIR	87 / 53
Johnson, Depp & Quisenberry CONSULTING ENGINEERS Springfield, Illinois	PLOT SCALE = 50.0000 ' / IN.	CHECKED -	REVISED -					CONTRACT NO. 76D96	
	PLOT DATE = 12/15/2010 09:40:05	DATE -	REVISED -		SCALE: SHEET NO. OF SHEETS STA. 1350+00.00 TO STA. 1365+00.00		ILLINOIS	FED. AID PROJECT	

LEGEND

MILLING AND RESURFACING LIMITS

REMOVAL ITEMS

REMOVE EXISTING CONCRETE MEDIAN
STA. 1366+05 TO STA. 1369+53
STA. 1370+40 TO STA. 1373+89

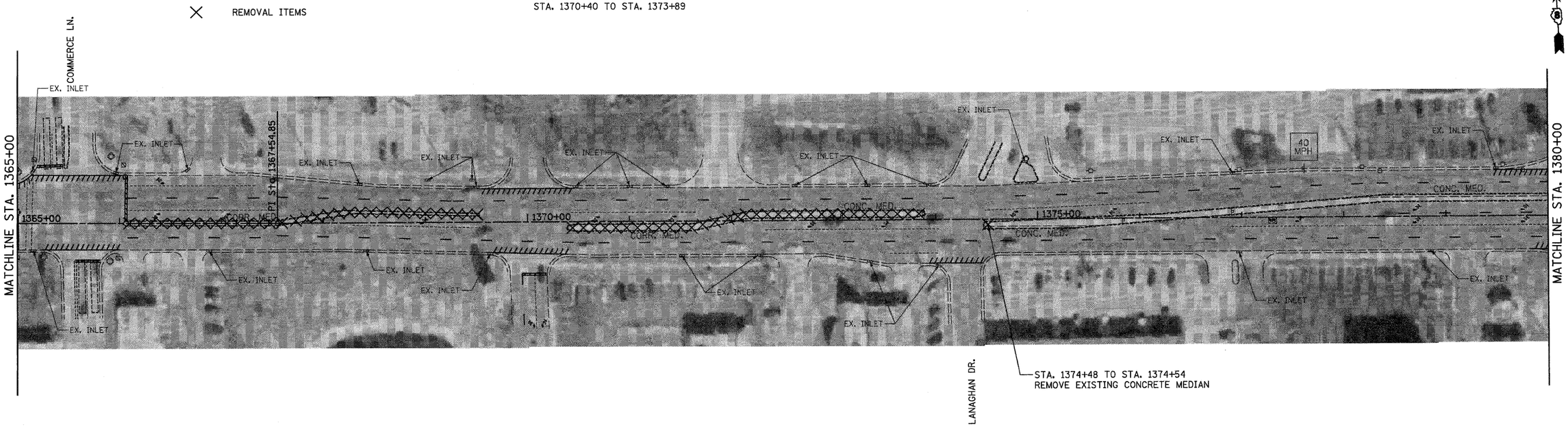

EXISTING & REMOVAL ITEMS

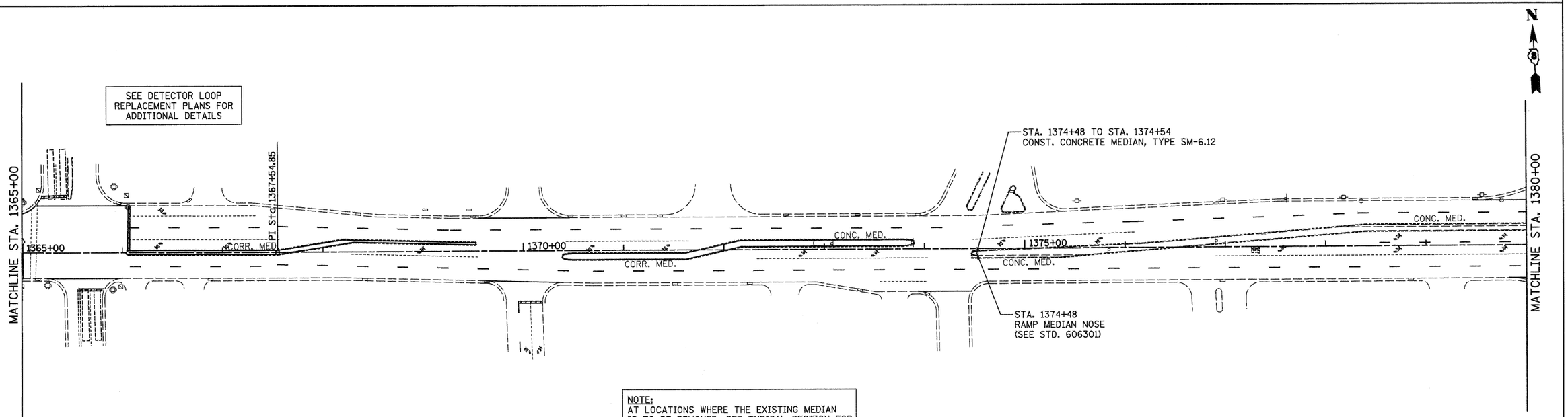

NOTE:
AT LOCATIONS WHERE THE EXISTING MEDIAN IS TO BE REMOVED, SEE TYPICAL SECTION FOR PAVEMENT STRUCTURE REPLACEMENT. SEE STRIPING PLANS.

50 0 50 100
SCALE IN FEET

PROPOSED IMPROVEMENTS

FILE NAME = ...\cadd\D876D96-sht-plan27.dgn	USER NAME = SJS	DESIGNED -	REVISED -	STATE OF ILLINOIS DEPARTMENT OF TRANSPORTATION	ST. CLAIR AVE./LINCOLN TRAIL PLAN SHEET	F.A.U. RTE.	SECTION	COUNTY	TOTAL SHEETS / SHEET NO.
Johnson, Depp & Quisenberry CONSULTING ENGINEERS Springfield, Illinois		DRAWN -	REVISED -			9166	34-1RS-3	ST. CLAIR	87 / 54
	PLOT SCALE = 50.0000 ' / IN.	CHECKED -	REVISED -					CONTRACT NO. 76D96	
	PLOT DATE = 12/15/2010 09:40:18	DATE -	REVISED -		SCALE: SHEET NO. OF SHEETS STA. 1365+00.00 TO STA. 1380+00.00		ILLINOIS FED. AID PROJECT		

LEGEND

MILLING AND RESURFACING LIMITS

REMOVAL ITEMS

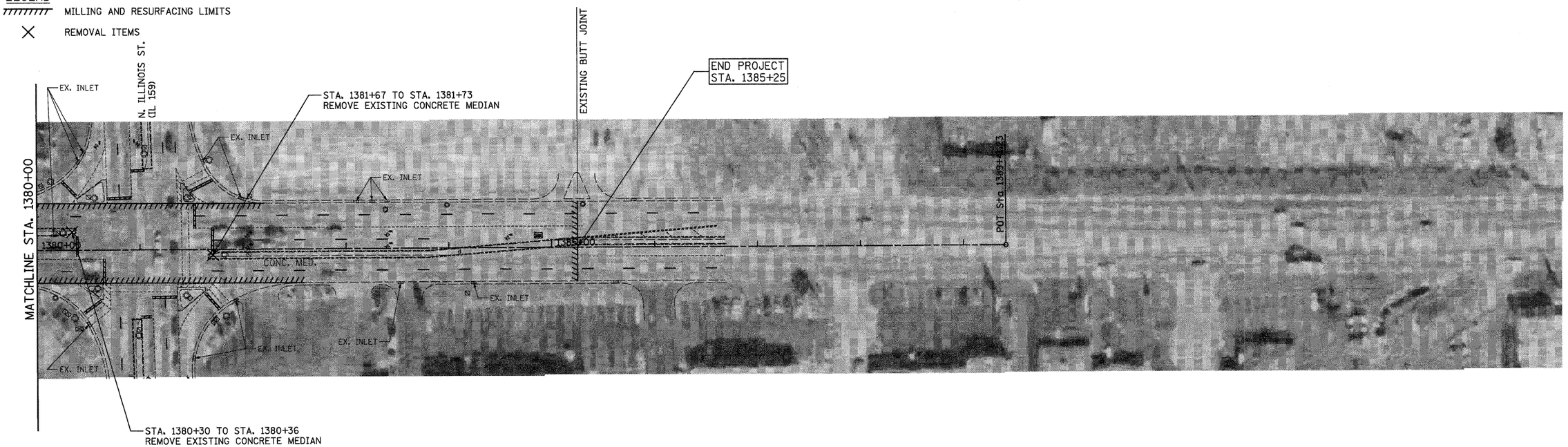

EXISTING & REMOVAL ITEMS

SEE DETECTOR LOOP REPLACEMENT PLANS FOR ADDITIONAL DETAILS

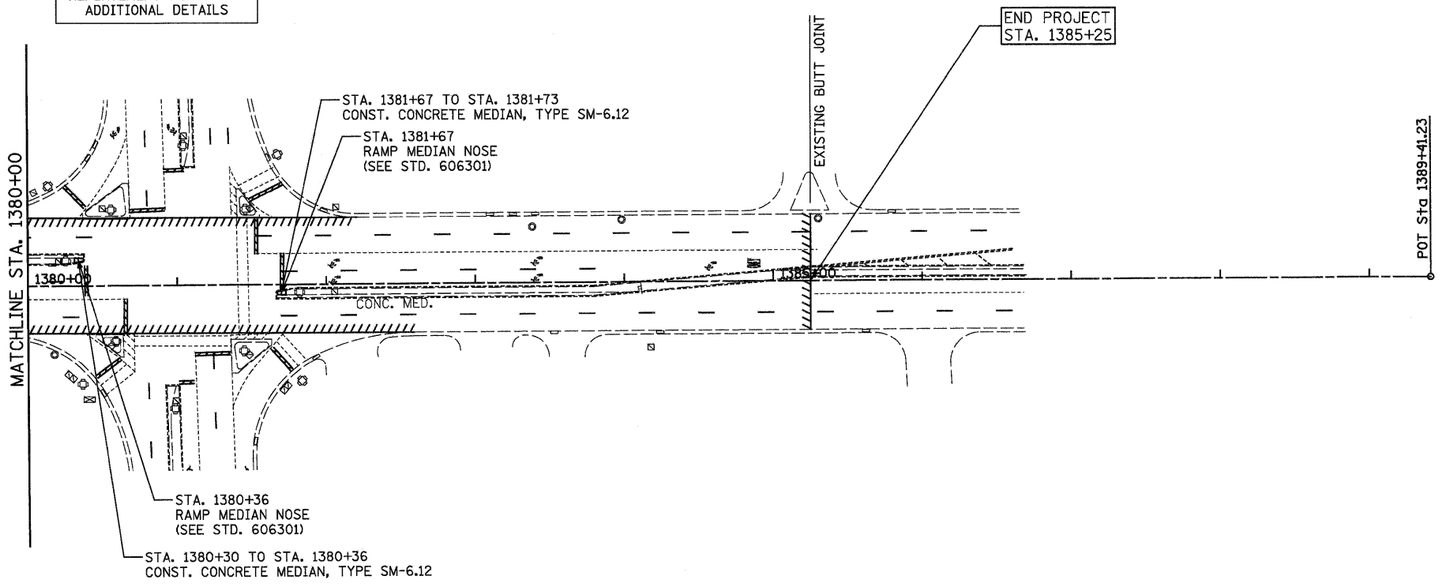

50 0 50 100

SCALE IN FEET

PROPOSED IMPROVEMENTS

FILE NAME = ...\oadd\D876D98-sht-plan28.dgn	USER NAME = SJS	DESIGNED -	REVISED -	STATE OF ILLINOIS DEPARTMENT OF TRANSPORTATION	ST. CLAIR AVE./LINCOLN TRAIL PLAN SHEET	F.A.U. RTE.	SECTION	COUNTY	TOTAL SHEETS	SHEET NO.
Johnson, Depp & Quisenberry CONSULTING ENGINEERS Springfield, Illinois		DRAWN -	REVISED -			9166	34-1RS-3	ST. CLAIR	87	55
	PLOT SCALE = 50.0000 ' / IN.	CHECKED -	REVISED -					CONTRACT NO. 76D96		
	PLOT DATE = 12/15/2010 09:40:32	DATE -	REVISED -		SCALE: SHEET NO. OF SHEETS STA. 1380+00.00 TO STA. 1389+41.23		ILLINOIS	FED. AID PROJECT		

KEEP RIGHT SIGN
R4-7 (2430)
(SEE SCHEDULES AND THESE PLANS
FOR LOCATIONS AND DETAILS)

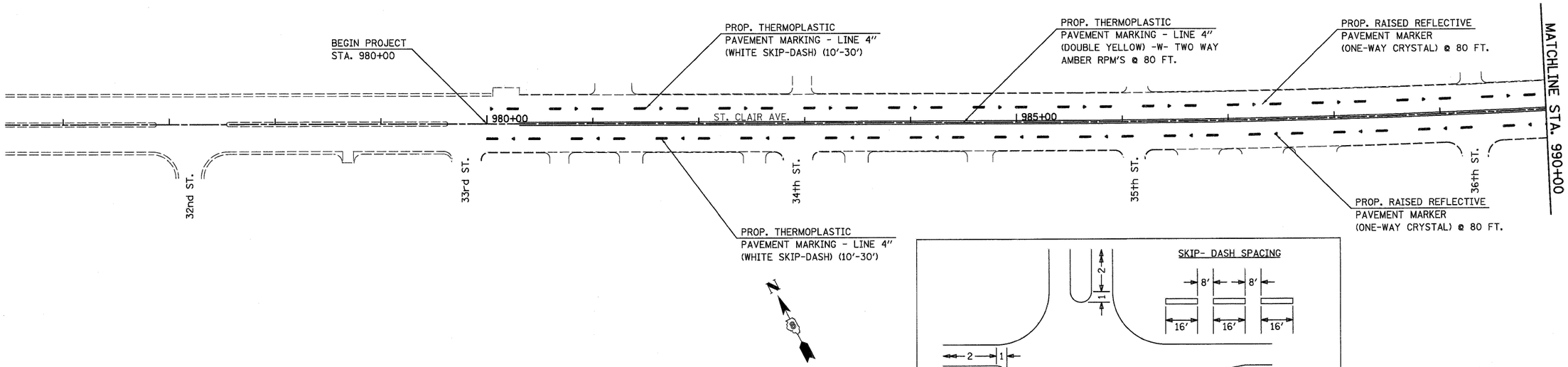

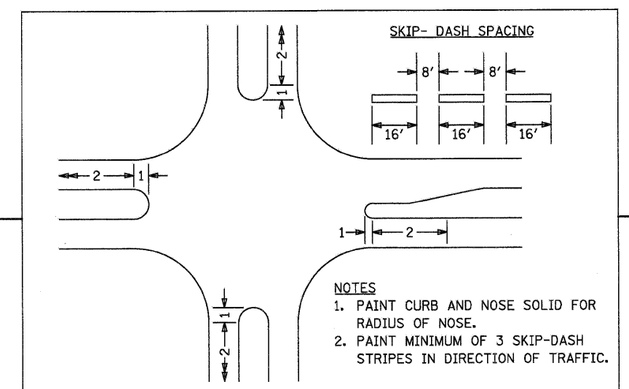

TYPICAL PAINTING/MARKING MEDIAN NOSE AND CURB DETAIL

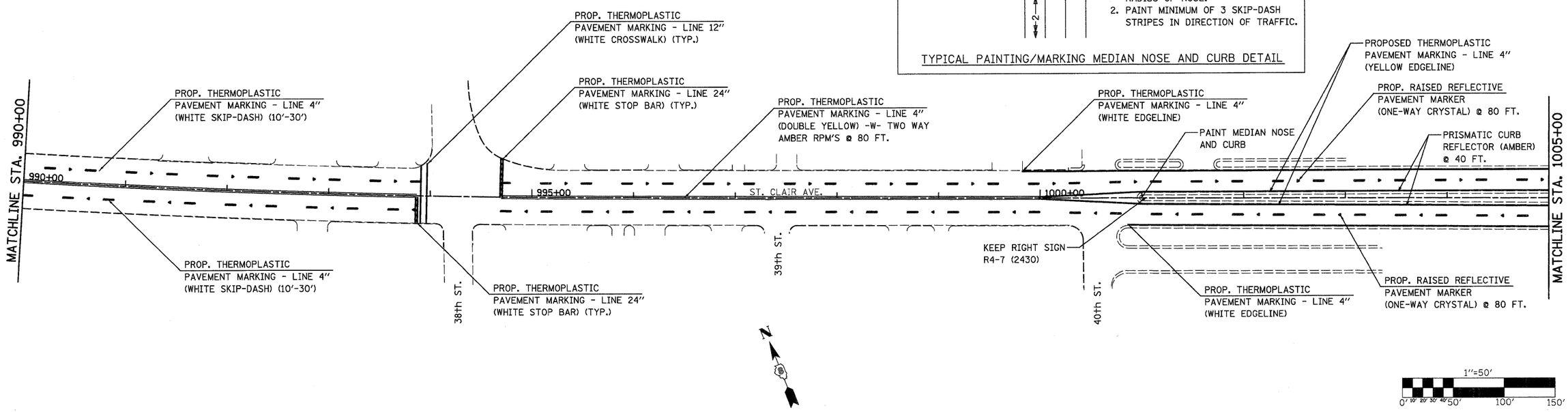

FILE NAME = ...\cadd\D876D96-sht-pmk.dgn	USER NAME = JTH	DESIGNED -	REVISED -	STATE OF ILLINOIS DEPARTMENT OF TRANSPORTATION	PAVEMENT MARKING & SIGN DETAILS	F.A.U. RTE.	SECTION	COUNTY	TOTAL SHEETS / SHEET NO.
		DRAWN -	REVISED -			9166	34-1RS-3	ST. CLAIR	87 / 56
Johnson, Depp & Quisenberry CONSULTING ENGINEERS Springfield, Illinois	PLOT SCALE = 50.0000 ' / IN.	CHECKED -	REVISED -					CONTRACT NO. 76D96	
	PLOT DATE = 01/13/2011 13:17:47	DATE -	REVISED -		SCALE: 1" = 50' / SHEET NO. 1 OF 14 SHEETS / STA. 975+45.58 TO STA. 1005+00		ILLINOIS FED. AID PROJECT		

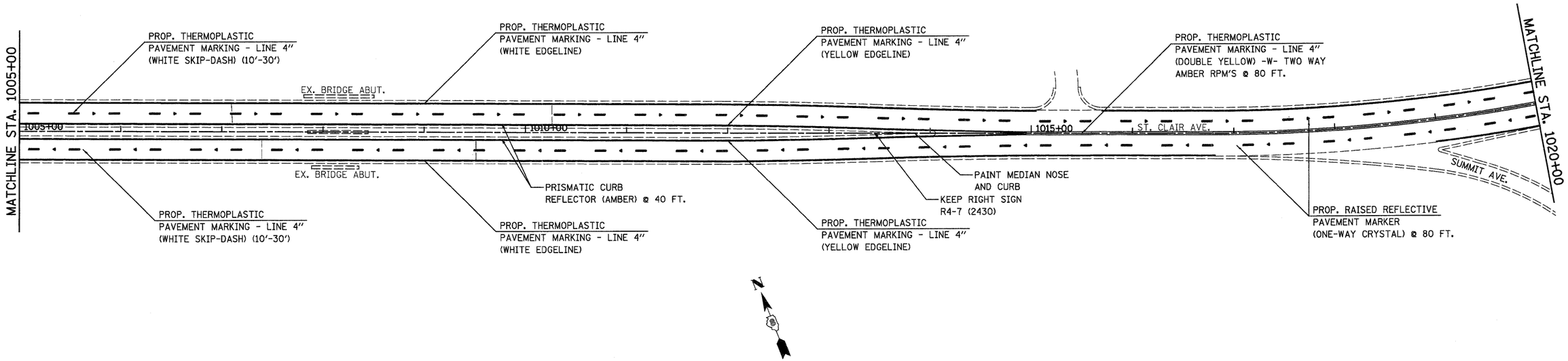

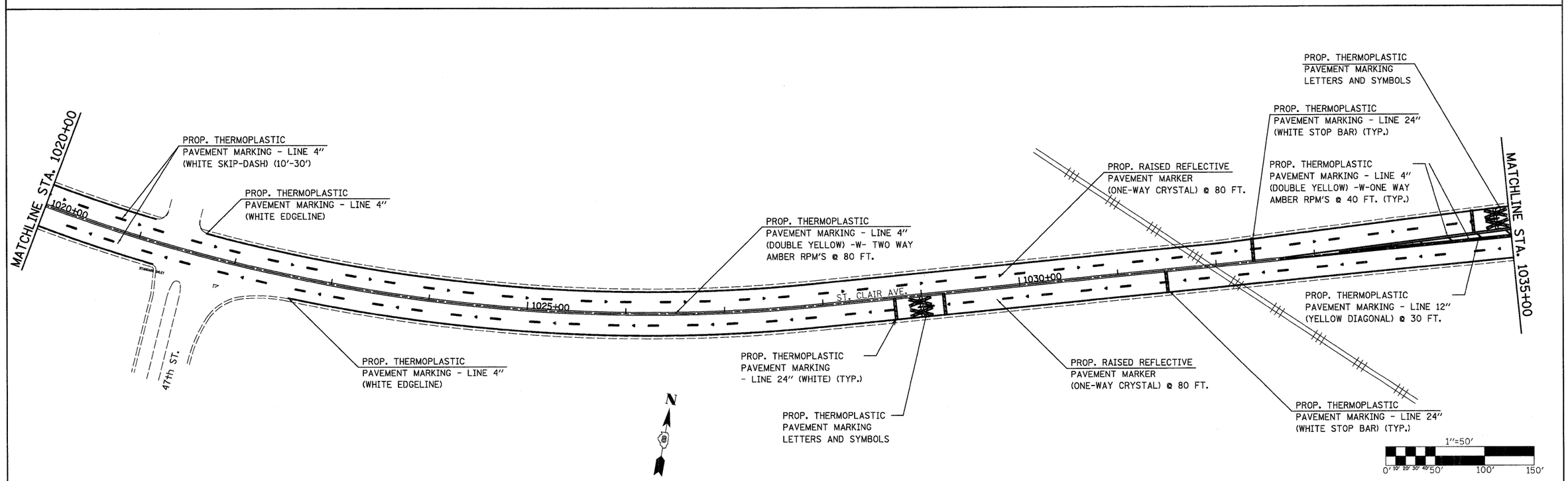

FILE NAME = ...\cadd\D876D96-sht-pmk.dgn	USER NAME = JTH	DESIGNED -	REVISED -	STATE OF ILLINOIS DEPARTMENT OF TRANSPORTATION	PAVEMENT MARKING & SIGN DETAILS		F.A.U. RTE.	SECTION	COUNTY	TOTAL SHEETS	SHEET NO.
		DRAWN -	REVISED -				9166	34-1RS-3	ST. CLAIR	87	57
Johnson, Depp & Quisenberry CONSULTING ENGINEERS Springfield, Illinois	PLOT SCALE = 50.0000 ' / IN.	CHECKED -	REVISED -						CONTRACT NO. 76D96		
	PLOT DATE = 01/13/2011 13:17:49	DATE -	REVISED -		SCALE: 1" = 50'	SHEET NO. 2 OF 14 SHEETS	STA. 1005+00 TO STA. 1035+00		ILLINOIS FED. AID PROJECT		

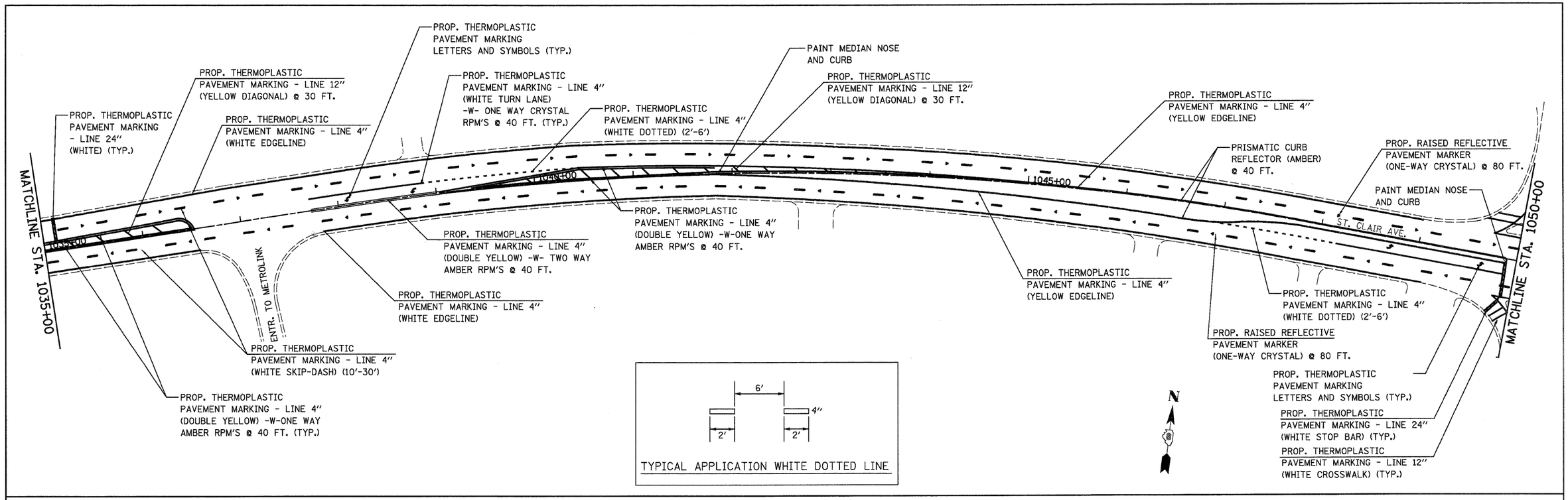

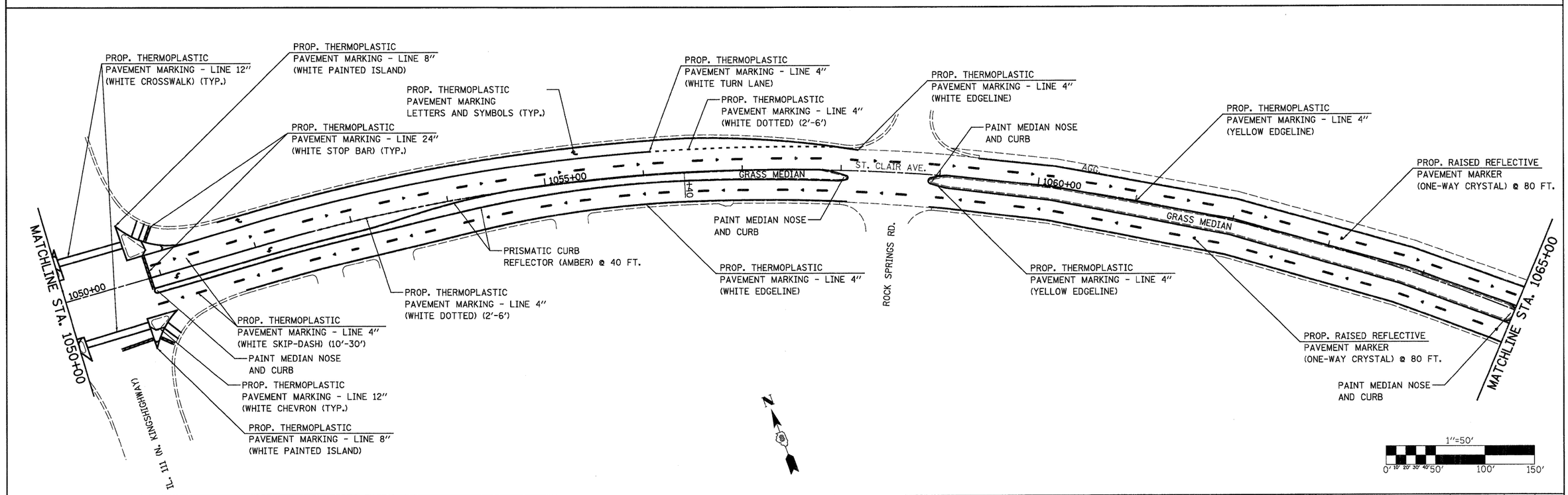

FILE NAME = ...\cadd\D876D96-sht-pmk.dgn	USER NAME = JTH	DESIGNED -	REVISED -	STATE OF ILLINOIS DEPARTMENT OF TRANSPORTATION	PAVEMENT MARKING & SIGN DETAILS	F.A.U. RTE.	SECTION	COUNTY	TOTAL SHEETS / SHEET NO.
Johnson, Depp & Quisenberry CONSULTING ENGINEERS Springfield, Illinois		DRAWN -	REVISED -			9166	34-1RS-3	ST. CLAIR	87 / 58
	PLOT SCALE = 50.0000 ' / IN.	CHECKED -	REVISED -					CONTRACT NO. 76D96	
	PLOT DATE = 01/13/2011 13:17:50	DATE -	REVISED -		SCALE: 1" = 50' / SHEET NO. 3 OF 14 SHEETS / STA. 1035+00 TO STA. 1065+00		ILLINOIS FED. AID PROJECT		

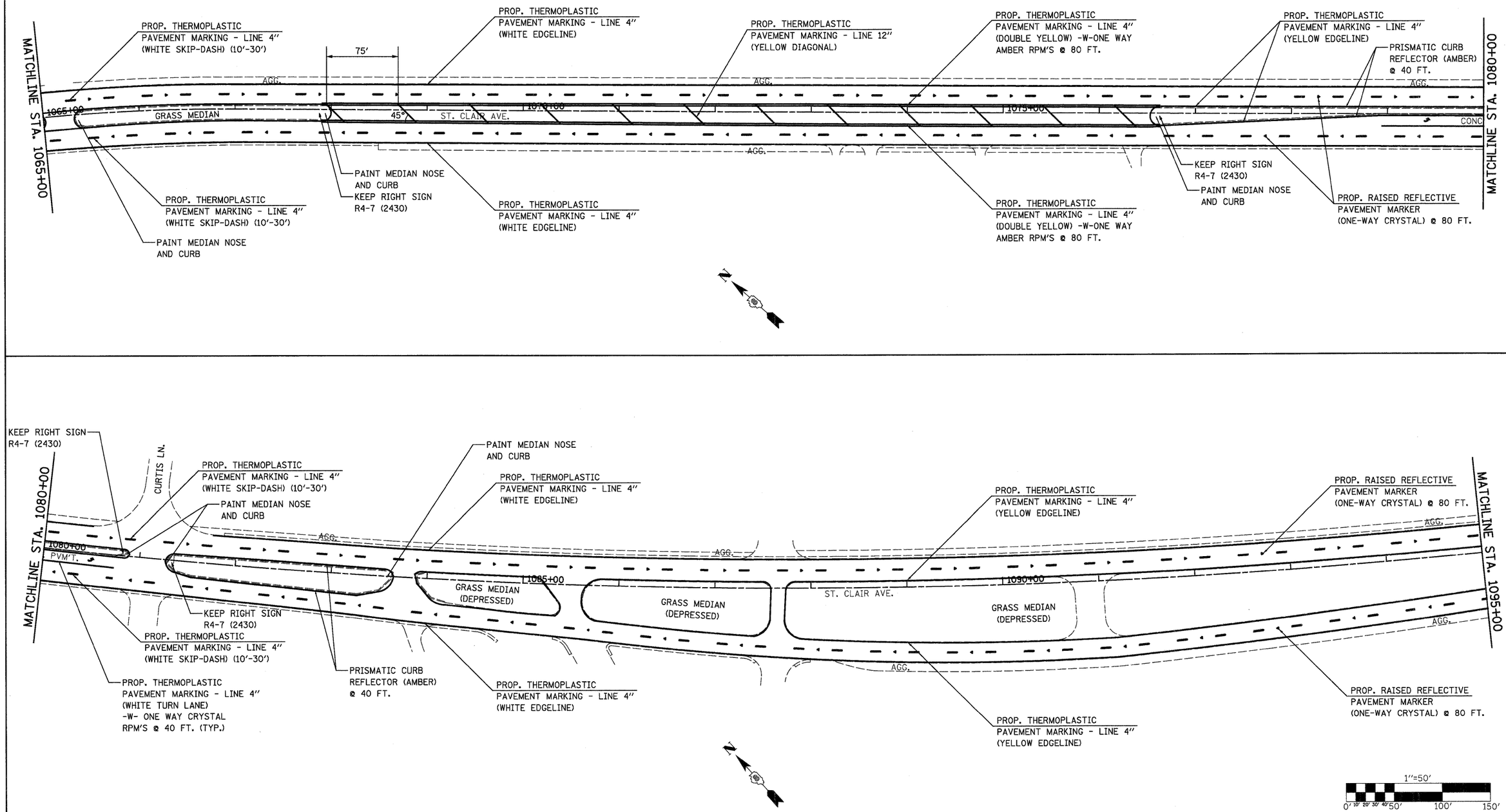

FILE NAME = ...\cadd\D876D96-sht-pmk.dgn	USER NAME = JTH	DESIGNED -	REVISED -	STATE OF ILLINOIS DEPARTMENT OF TRANSPORTATION	PAVEMENT MARKING & SIGN DETAILS		F.A.U. RTE.	SECTION	COUNTY	TOTAL SHEETS / SHEET NO.
Johnson, Depp & Quisenberry CONSULTING ENGINEERS Springfield, Illinois		DRAWN -	REVISED -				9166	34-1RS-3	ST. CLAIR	87 / 59
	PLOT SCALE = 50.0000 ' / IN.	CHECKED -	REVISED -						CONTRACT NO. 76D96	
	PLOT DATE = 01/13/2011 13:17:52	DATE -	REVISED -		SCALE: 1" = 50'	SHEET NO. 4 OF 14 SHEETS	STA. 1065+00 TO STA. 1095+00		ILLINOIS FED. AID PROJECT	

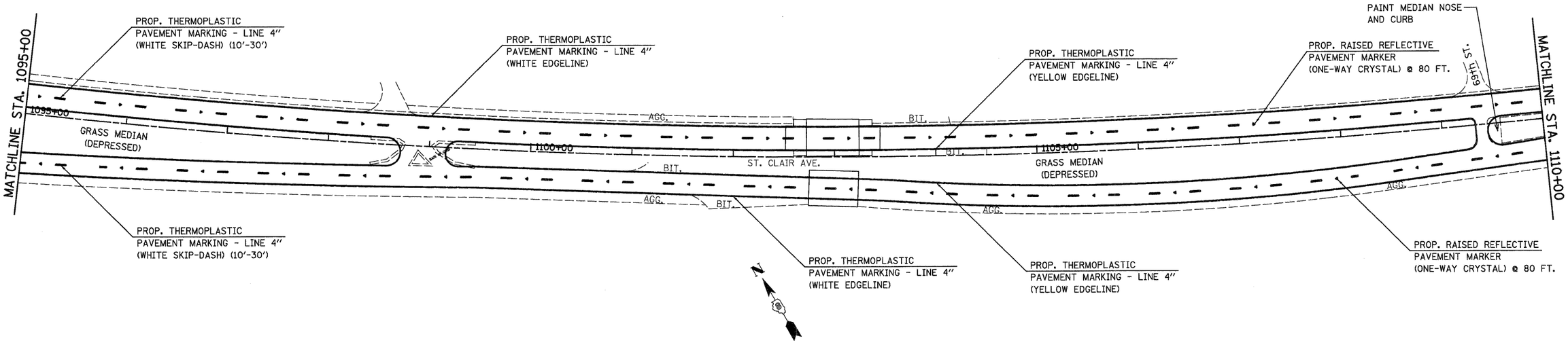

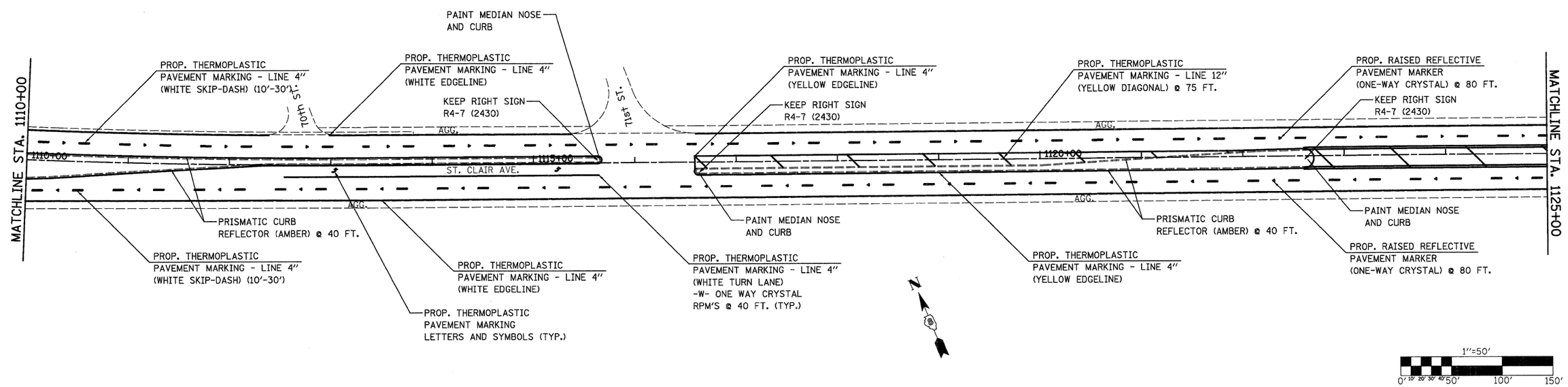

FILE NAME = ...\cadd\D876D96-sht-pmk.dgn	USER NAME = JTH	DESIGNED -	REVISED -	STATE OF ILLINOIS DEPARTMENT OF TRANSPORTATION	PAVEMENT MARKING & SIGN DETAILS			F.A.U. RTE.	SECTION	COUNTY	TOTAL SHEETS	SHEET NO.
		DRAWN -	REVISED -					9166	34-1RS-3	ST. CLAIR	87	60
Johnson, Depp & Quisenberry CONSULTING ENGINEERS Springfield, Illinois	PLOT SCALE = 50.0000 ' / IN.	CHECKED -	REVISED -							CONTRACT NO. 76D96		
	PLOT DATE = 01/13/2011 13:17:53	DATE -	REVISED -		SCALE: 1" = 50'	SHEET NO. 5 OF 14 SHEETS	STA. 1095+00 TO STA. 1125+00		ILLINOIS	FED. AID PROJECT		

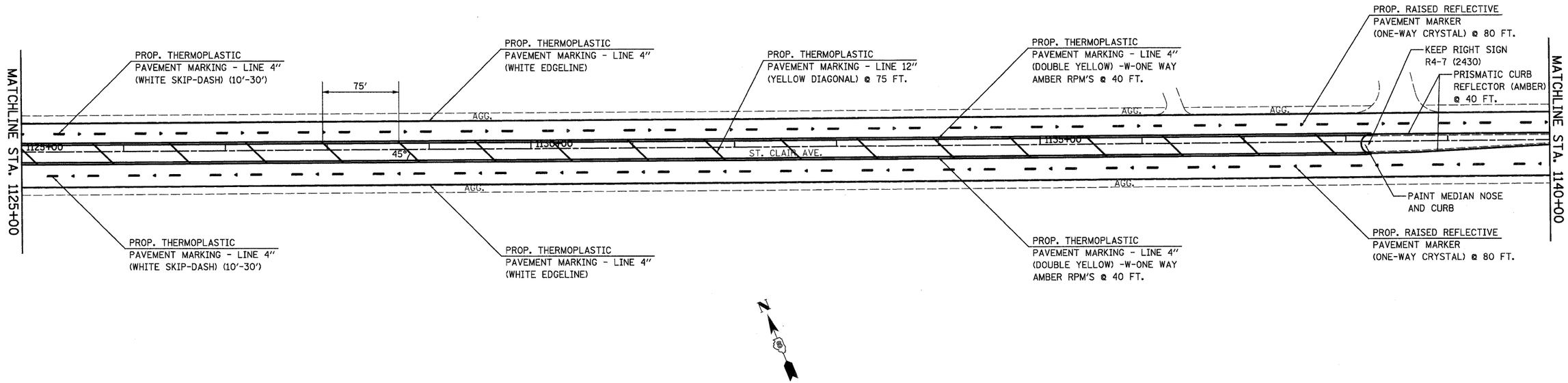

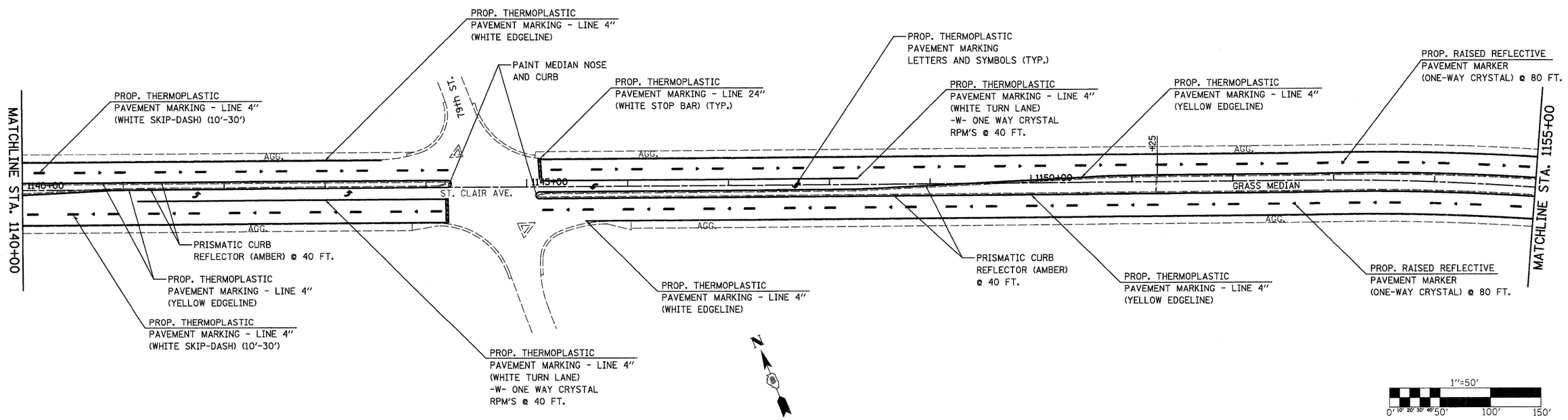

FILE NAME = ...\cadd\D876D96-sht-pmk.dgn	USER NAME = JTH	DESIGNED -	REVISED -	STATE OF ILLINOIS DEPARTMENT OF TRANSPORTATION	PAVEMENT MARKING & SIGN DETAILS	F.A.U. RTE.	SECTION	COUNTY	TOTAL SHEETS / SHEET NO.
Johnson, Depp & Quisenberry CONSULTING ENGINEERS Springfield, Illinois		DRAWN -	REVISED -			9166	34-1RS-3	ST. CLAIR	87 / 61
	PLOT SCALE = 50.0000 ' / IN.	CHECKED -	REVISED -					CONTRACT NO. 76D96	
	PLOT DATE = 01/13/2011 13:17:54	DATE -	REVISED -		SCALE: 1" = 50' / SHEET NO. 6 OF 14 SHEETS / STA. 1125+00 TO STA. 1155+00		ILLINOIS FED. AID PROJECT		

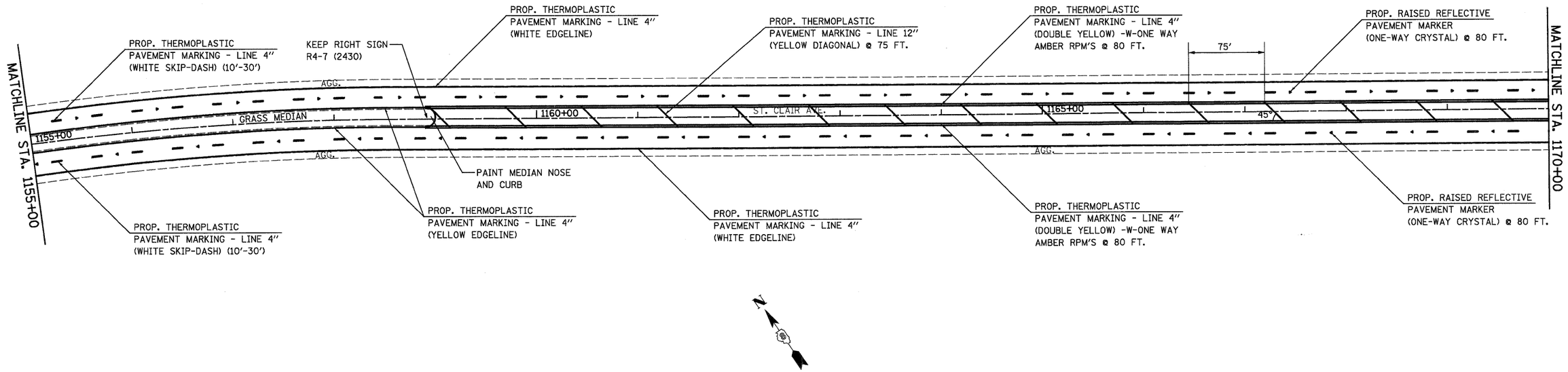

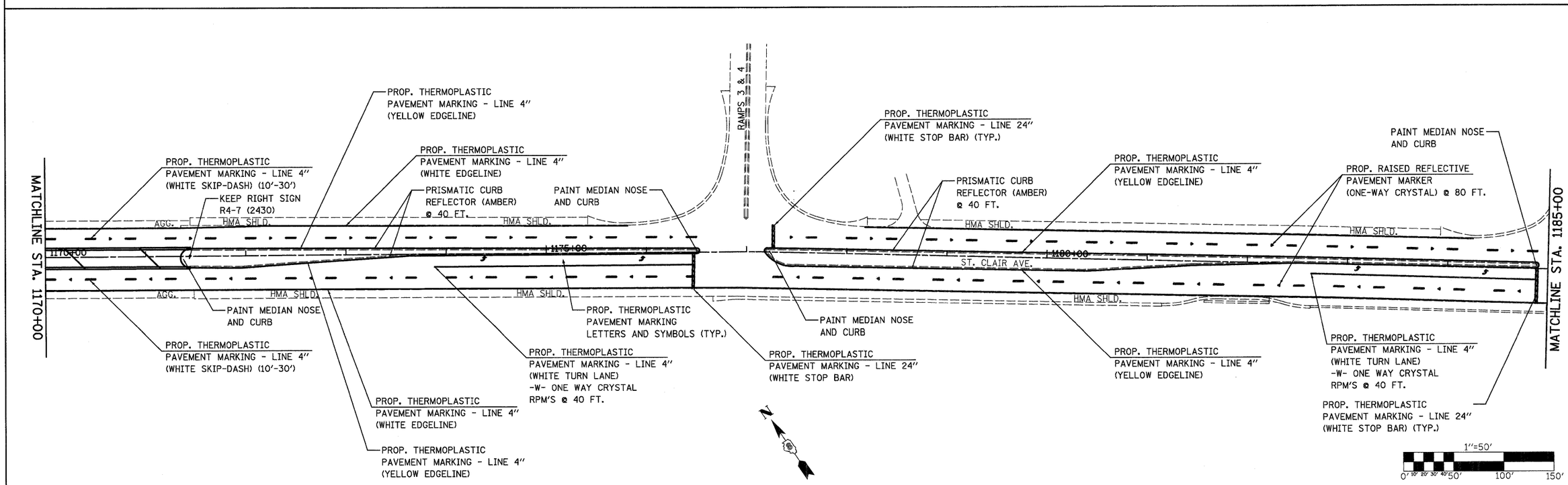

FILE NAME = ...\cadd\D876D96-sht-pmk.dgn	USER NAME = JTH	DESIGNED -	REVISED -	STATE OF ILLINOIS DEPARTMENT OF TRANSPORTATION	PAVEMENT MARKING & SIGN DETAILS	F.A.U. RTE.	SECTION	COUNTY	TOTAL SHEETS / SHEET NO.
		DRAWN -	REVISED -			9166	34-1RS-3	ST. CLAIR	87 / 62
Johnson, Depp & Quisenberry CONSULTING ENGINEERS Springfield, Illinois	PLOT SCALE = 50.0000 ' / IN.	CHECKED -	REVISED -					CONTRACT NO. 76D96	
	PLOT DATE = 01/13/2011 13:17:56	DATE -	REVISED -		SCALE: 1" = 50' / SHEET NO. 7 OF 14 SHEETS / STA. 1155+00 TO STA. 1185+00		ILLINOIS	FED. AID PROJECT	

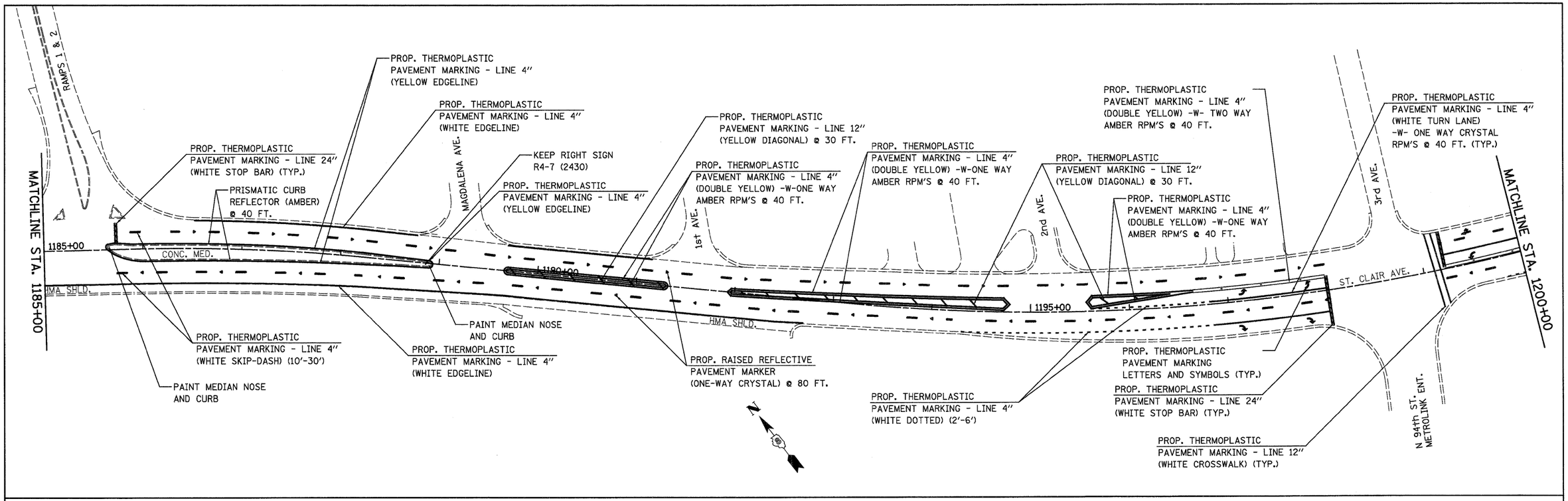

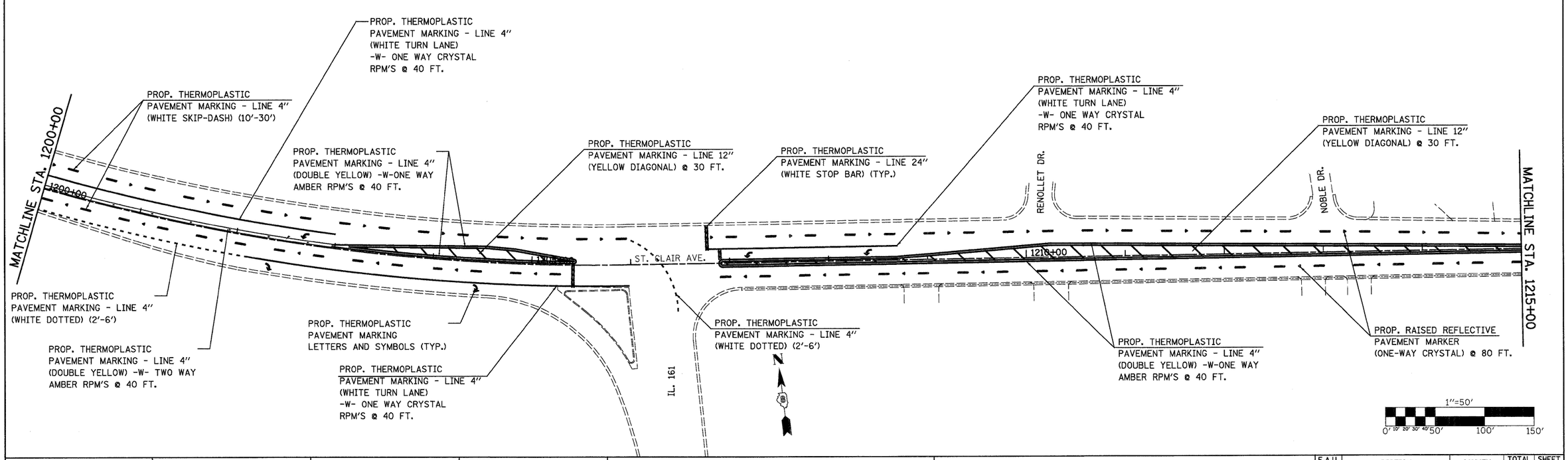

FILE NAME = ...\oadd\D876D96-sht-pmk.dgn	USER NAME = JTH	DESIGNED -	REVISED -	STATE OF ILLINOIS DEPARTMENT OF TRANSPORTATION	PAVEMENT MARKING & SIGN DETAILS	F.A.U. RTE.	SECTION	COUNTY	TOTAL SHEETS / SHEET NO.
		DRAWN -	REVISED -			9166	34-1RS-3	ST. CLAIR	87 / 63
Johnson, Depp & Quisenberry CONSULTING ENGINEERS Springfield, Illinois	PLOT SCALE = 50.0000 ' / IN.	CHECKED -	REVISED -					CONTRACT NO. 76D96	
	PLOT DATE = 01/13/2011 13:17:57	DATE -	REVISED -		SCALE: 1" = 50' / SHEET NO. 8 OF 14 SHEETS / STA. 1185+00 TO STA. 1215+00		ILLINOIS FED. AID PROJECT		

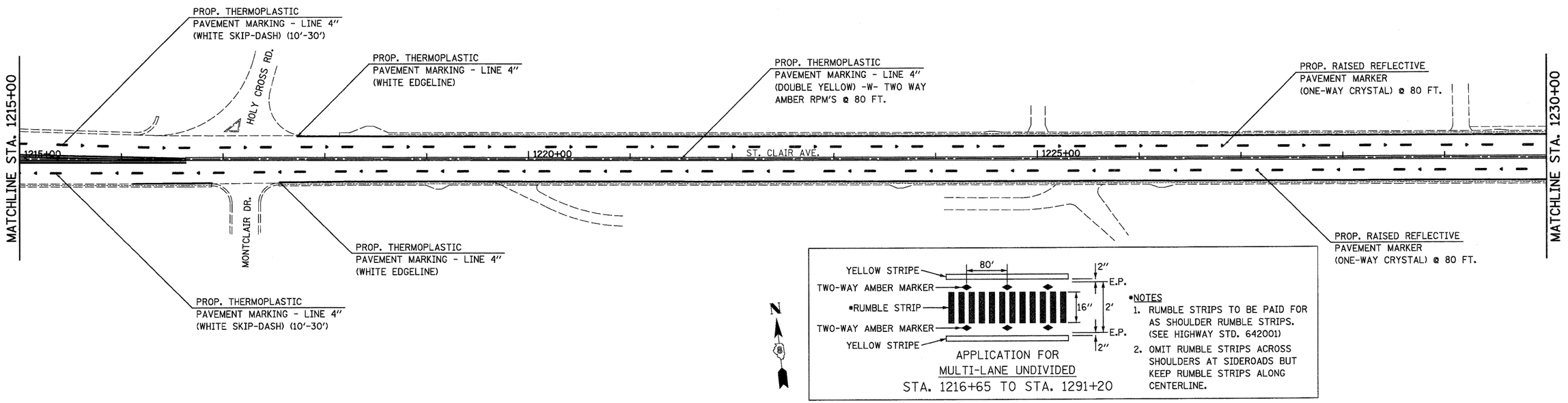

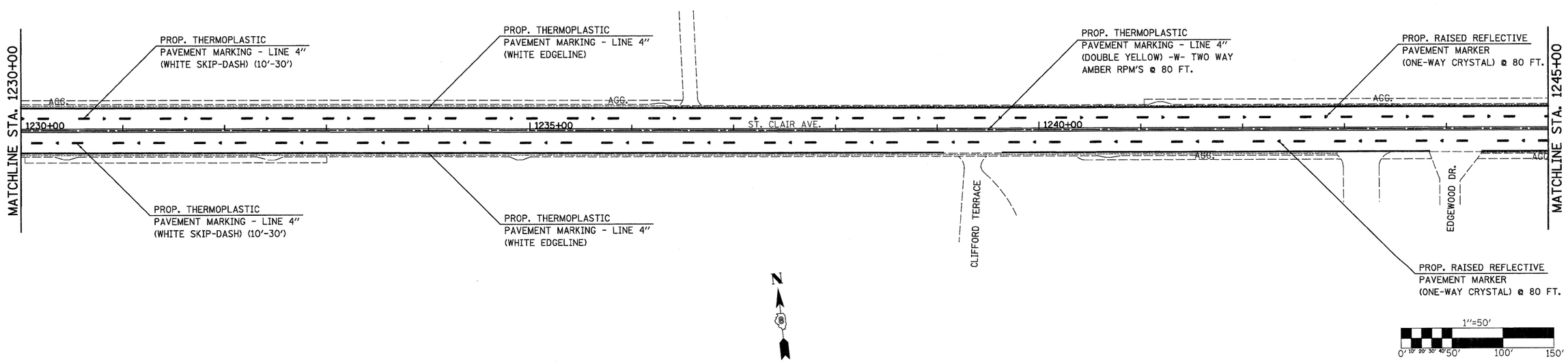

FILE NAME = ...\cadd\D876D96-sht-pmk.dgn	USER NAME = JTH	DESIGNED -	REVISED -	STATE OF ILLINOIS DEPARTMENT OF TRANSPORTATION	PAVEMENT MARKING & SIGN DETAILS	F.A.U. RTE.	SECTION	COUNTY	TOTAL SHEETS / SHEET NO.
Johnson, Depp & Quisenberry CONSULTING ENGINEERS Springfield, Illinois		DRAWN -	REVISED -			9166	34-1RS-3	ST. CLAIR	87 / 64
	PLOT SCALE = 50.0000 ' / IN.	CHECKED -	REVISED -					CONTRACT NO. 76D96	
	PLOT DATE = 01/13/2011 13:18:01	DATE -	REVISED -		SCALE: 1" = 50' / SHEET NO. 9 OF 14 SHEETS / STA. 1215+00 TO STA. 1245+00		ILLINOIS	FED. AID PROJECT	

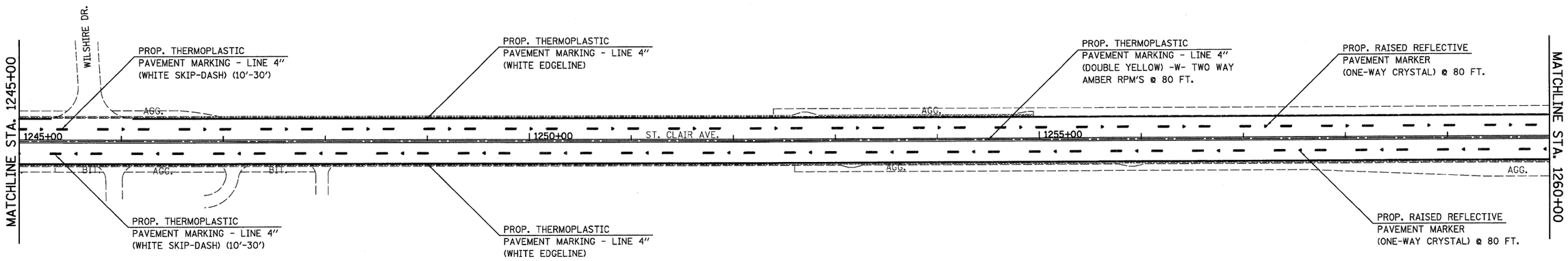

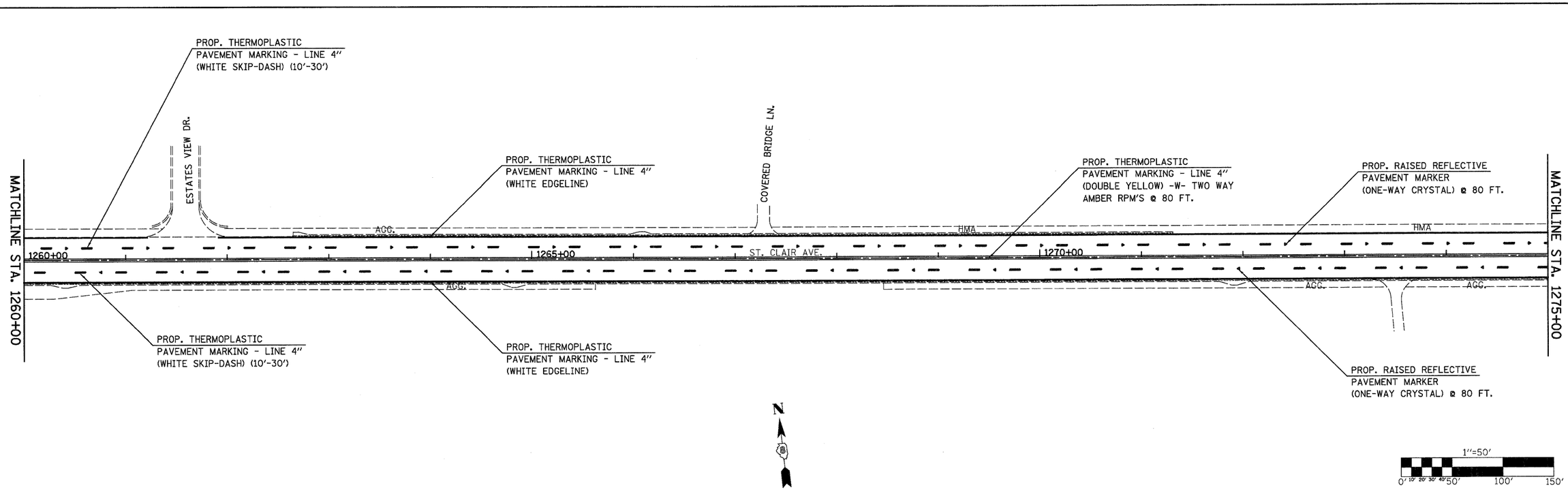

FILE NAME = ...\cadd\D876D96-sht-pmk.dgn	USER NAME = JTH	DESIGNED -	REVISED -	STATE OF ILLINOIS DEPARTMENT OF TRANSPORTATION	PAVEMENT MARKING & SIGN DETAILS	F.A.U. RTE.	SECTION	COUNTY	TOTAL SHEETS / SHEET NO.
Johnson, Depp & Quisenberry CONSULTING ENGINEERS Springfield, Illinois		DRAWN -	REVISED -			9166	34-1RS-3	ST. CLAIR	87 / 65
	PLOT SCALE = 50.0000 ' / IN.	CHECKED -	REVISED -					CONTRACT NO. 76D96	
	PLOT DATE = 01/13/2011 13:18:02	DATE -	REVISED -		SCALE: 1" = 50' / SHEET NO. 10 OF 14 SHEETS / STA. 1245+00 TO STA. 1275+00		ILLINOIS	FED. AID PROJECT	

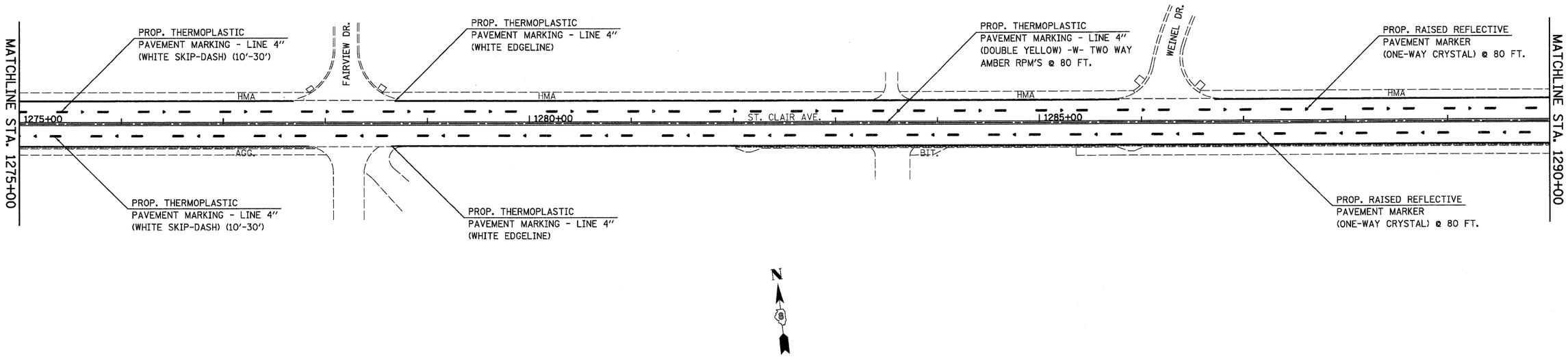

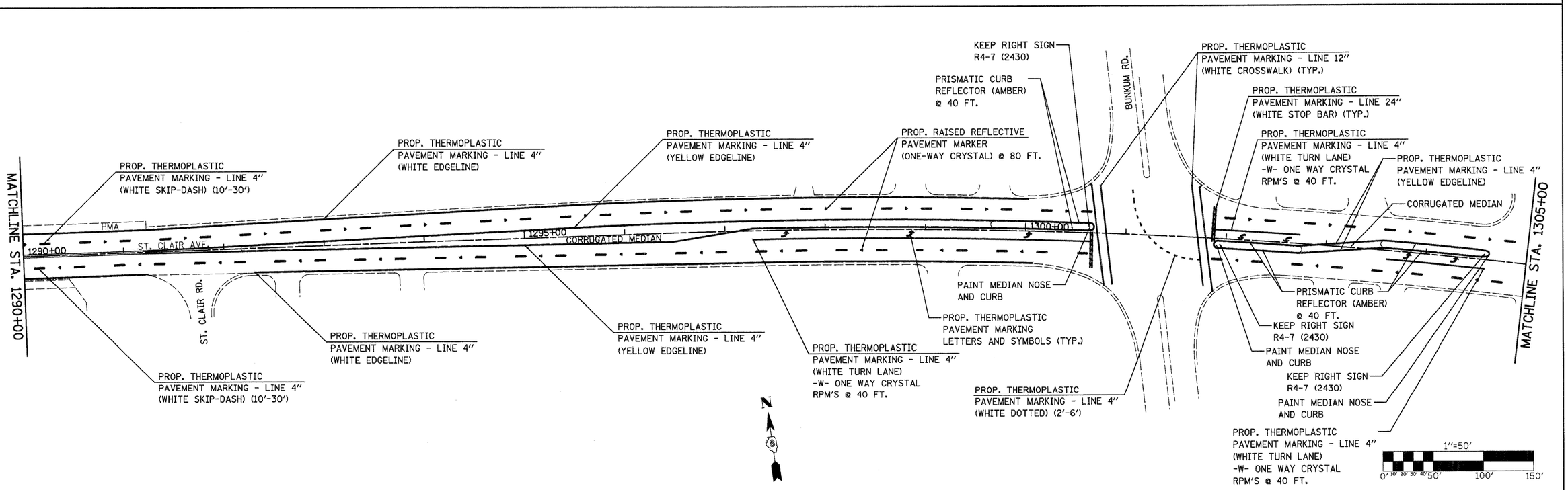

FILE NAME = ...\cadd\D876D96-sht-pmk.dgn	USER NAME = JTH	DESIGNED -	REVISED -	STATE OF ILLINOIS DEPARTMENT OF TRANSPORTATION	PAVEMENT MARKING & SIGN DETAILS		F.A.U. RTE.	SECTION	COUNTY	TOTAL SHEETS	SHEET NO.
		DRAWN -	REVISED -				9166	34-1RS-3	ST. CLAIR	87	66
Johnson, Depp & Quisenberry CONSULTING ENGINEERS Springfield, Illinois	PLOT SCALE = 50.0000 ' / IN.	CHECKED -	REVISED -						CONTRACT NO. 76D96		
	PLOT DATE = 01/13/2011 13:16:03	DATE -	REVISED -		SCALE: 1" = 50'	SHEET NO. 11 OF 14 SHEETS	STA. 1275+00 TO STA. 1305+00		ILLINOIS FED. AID PROJECT		

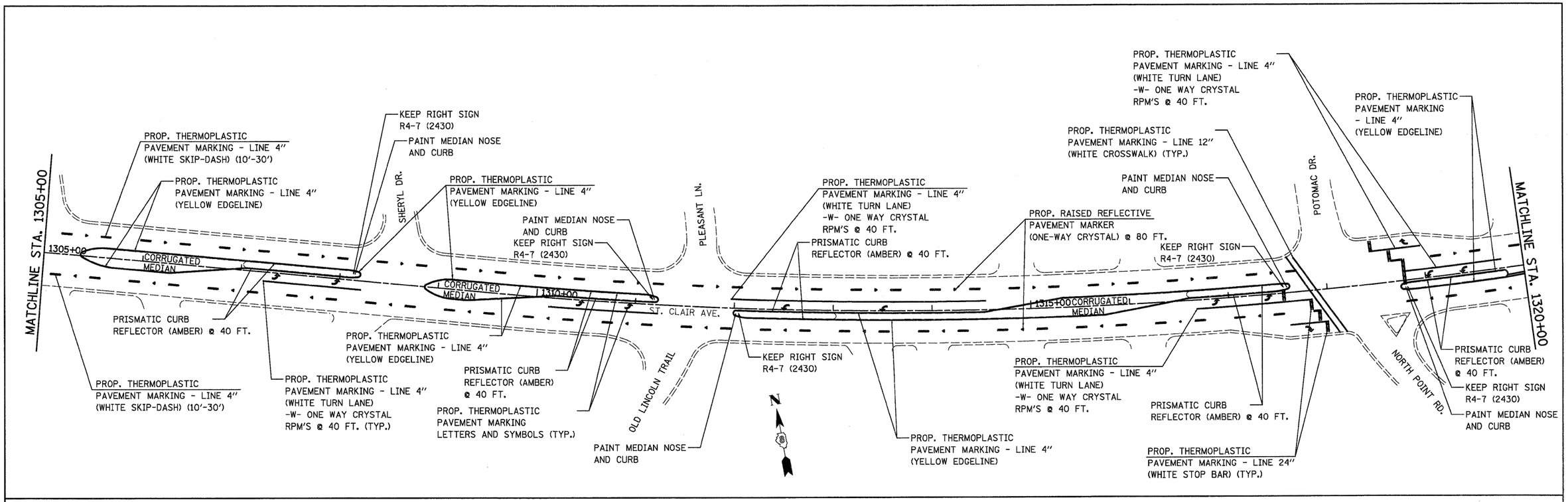

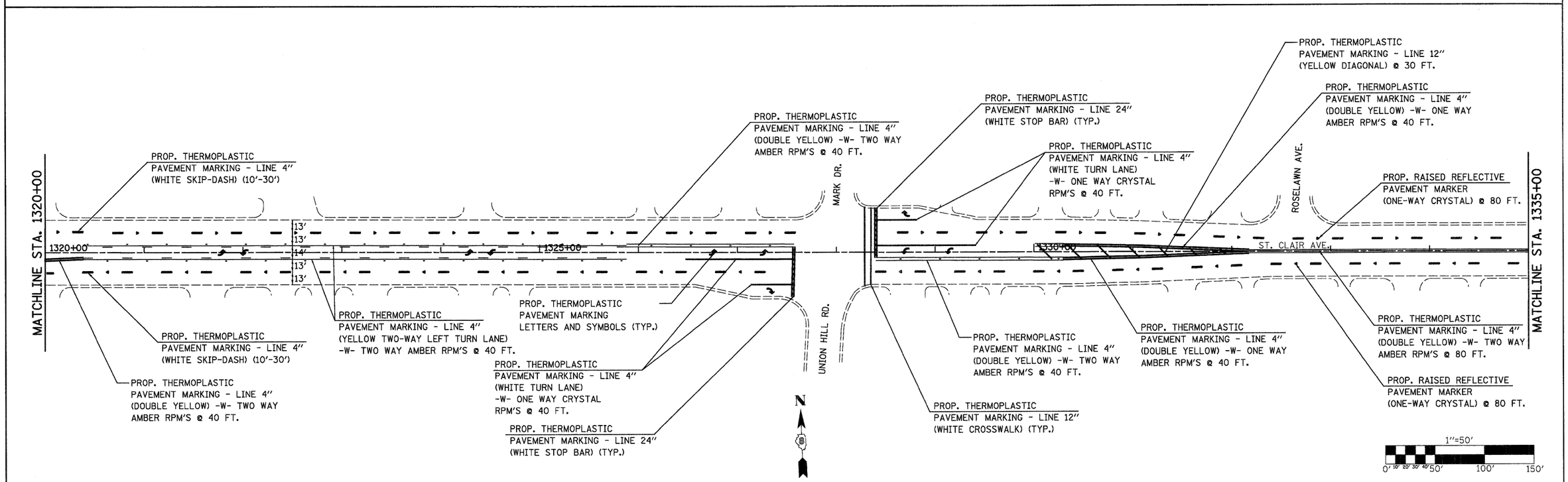

FILE NAME = ...\cadd\D876D96-sht-pmk.dgn	USER NAME = JTH	DESIGNED -	REVISED -	STATE OF ILLINOIS DEPARTMENT OF TRANSPORTATION	PAVEMENT MARKING & SIGN DETAILS			F.A.U. RTE.	SECTION	COUNTY	TOTAL SHEETS	SHEET NO.
		DRAWN -	REVISED -					9166	34-1RS-3	ST. CLAIR	87	67
Johnson, Depp & Quisenberry CONSULTING ENGINEERS Springfield, Illinois	PLOT SCALE = 50.0000 ' / IN.	CHECKED -	REVISED -							CONTRACT NO. 76D96		
	PLOT DATE = 01/13/2011 13:18:05	DATE -	REVISED -		SCALE: 1" = 50'	SHEET NO. 12 OF 14 SHEETS	STA. 1305+00 TO STA. 1335+00		ILLINOIS FED. AID PROJECT			

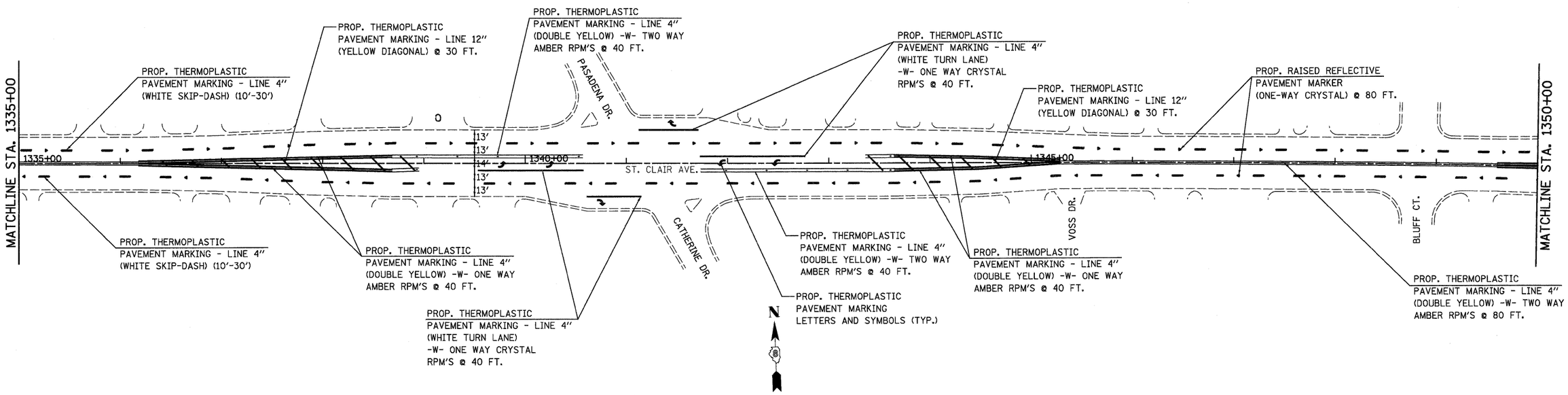

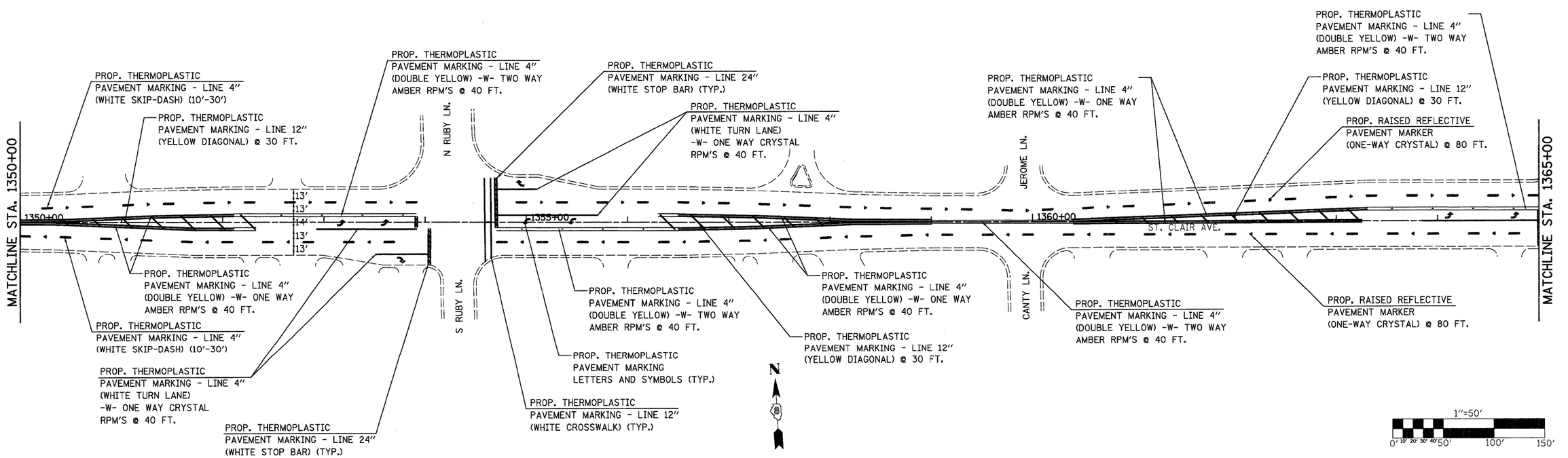

FILE NAME = ...\cadd\D876D96-sht-pmk.dgn	USER NAME = JTH	DESIGNED -	REVISED -	STATE OF ILLINOIS DEPARTMENT OF TRANSPORTATION	PAVEMENT MARKING & SIGN DETAILS	F.A.U. RTE.	SECTION	COUNTY	TOTAL SHEETS	SHEET NO.
Johnson, Depp & Quisenberry CONSULTING ENGINEERS Springfield, Illinois		DRAWN -	REVISED -			9166	34-1RS-3	ST. CLAIR	87	68
	PLOT SCALE = 50.0000 ' / IN.	CHECKED -	REVISED -					CONTRACT NO. 76D96		
	PLOT DATE = 01/13/2011 13:16:07	DATE -	REVISED -		SCALE: 1" = 50' / SHEET NO. 13 OF 14 SHEETS / STA. 1335+00 TO STA. 1365+00		ILLINOIS FED. AID PROJECT			

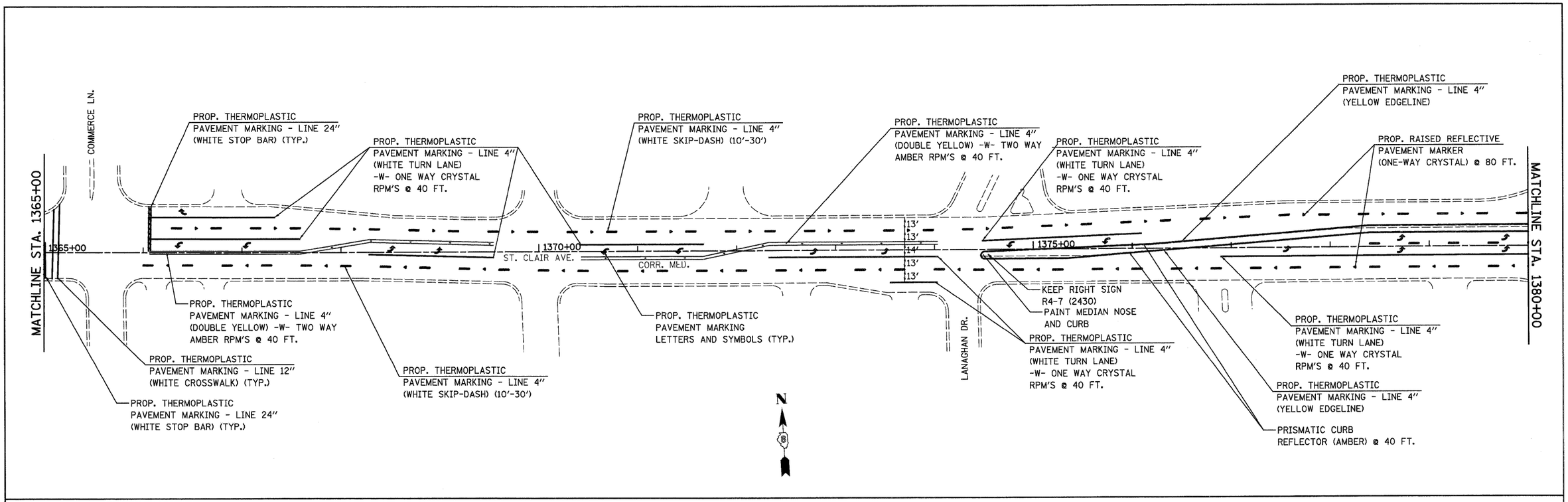

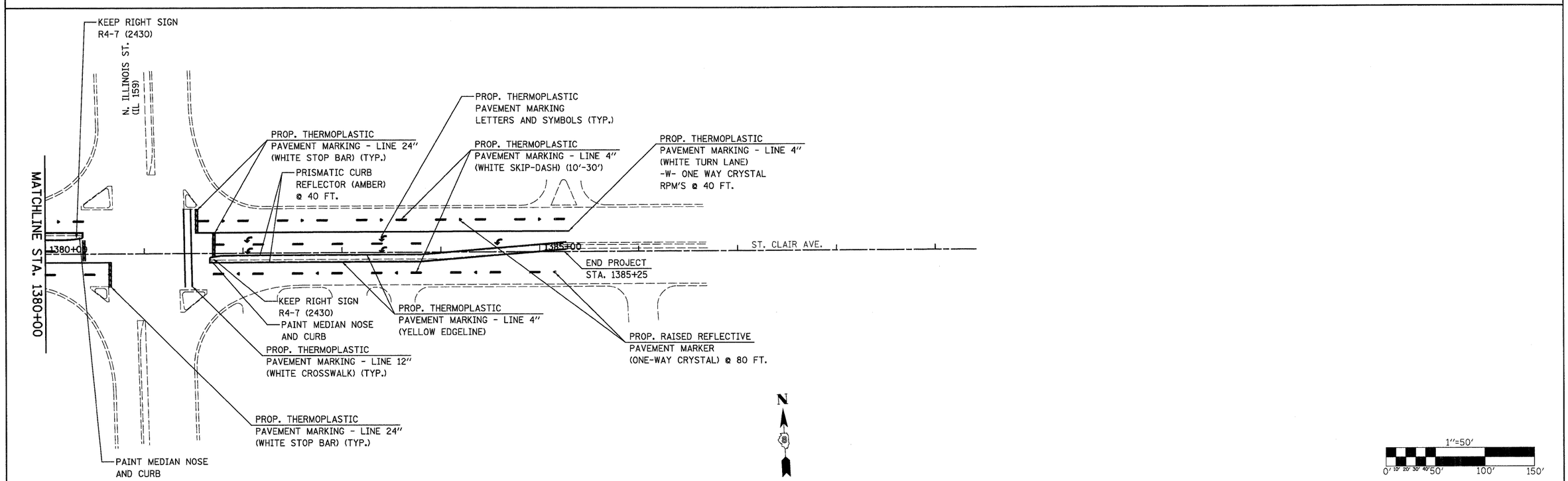

FILE NAME = ...\cadd\D876D96-sht-pmk.dgn	USER NAME = JTH	DESIGNED -	REVISED -	STATE OF ILLINOIS DEPARTMENT OF TRANSPORTATION	PAVEMENT MARKING & SIGN DETAILS	F.A.U. RTE.	SECTION	COUNTY	TOTAL SHEETS	SHEET NO.
Johnson, Depp & Quisenberry CONSULTING ENGINEERS Springfield, Illinois		DRAWN -	REVISED -			9166	34-1RS-3	ST. CLAIR	87	69
	PLOT SCALE = 50.0000 ' / IN.	CHECKED -	REVISED -					CONTRACT NO. 76D96		
	PLOT DATE = 01/13/2011 13:18:09	DATE -	REVISED -		SCALE: 1" = 50' / SHEET NO. 14 OF 14 SHEETS / STA. 1365+00 TO STA. 1389+41.23		ILLINOIS	FED. AID PROJECT		

DETECTOR LOOP REQUIREMENTS AND CALCULATIONS FOR ST. CLAIRE AVE AND 37th/38th ST.

ST. CLAIR & 37TH ST./38TH ST.					
LOOP	PHASE #	FT. X FT.	CALCULATED INDUCTANCE MICROHENRIES (µH)	CALCULATED RESISTANCE OHMS (Ω)	REQUIRED # OF TURNS
1. EB A CCD	2	6 X 6	370.8	3.0	6
2. EB B CCD	2	6 X 6	368.2	2.9	6
3. EB THRU A CD	2	6 X 500	563.2	2.7	3-6-3
4. EB THRU A CD	6	6 X 500	560.3	2.7	3-6-3
5. NB THRU CD	3	N/A	N/A	N/A	N/A
6. WB A CCD	4	6 X 6	952.0	2.9	3-6-3
7. WB B CCD	4	6 X 6	1054.78	3.0	3-6-3
8. WB THRU A CD	4	6 X 500	300.9	1.4	6
9. WB THRU B CD	4	6 X 500	297.8	1.3	6
10. SB THRU CD	4	N/A	N/A	N/A	N/A
11. SB RT CD	4	N/A	N/A	N/A	N/A

THE ABOVE VALUES ARE CALCULATED OF COMBINED LOOP AND LEAD-IN INDUCTANCES AND RESISTANCES. ACTUAL MEASURED VALUES SHOULD BE WITHIN +/- 20% OF THESE VALUES.

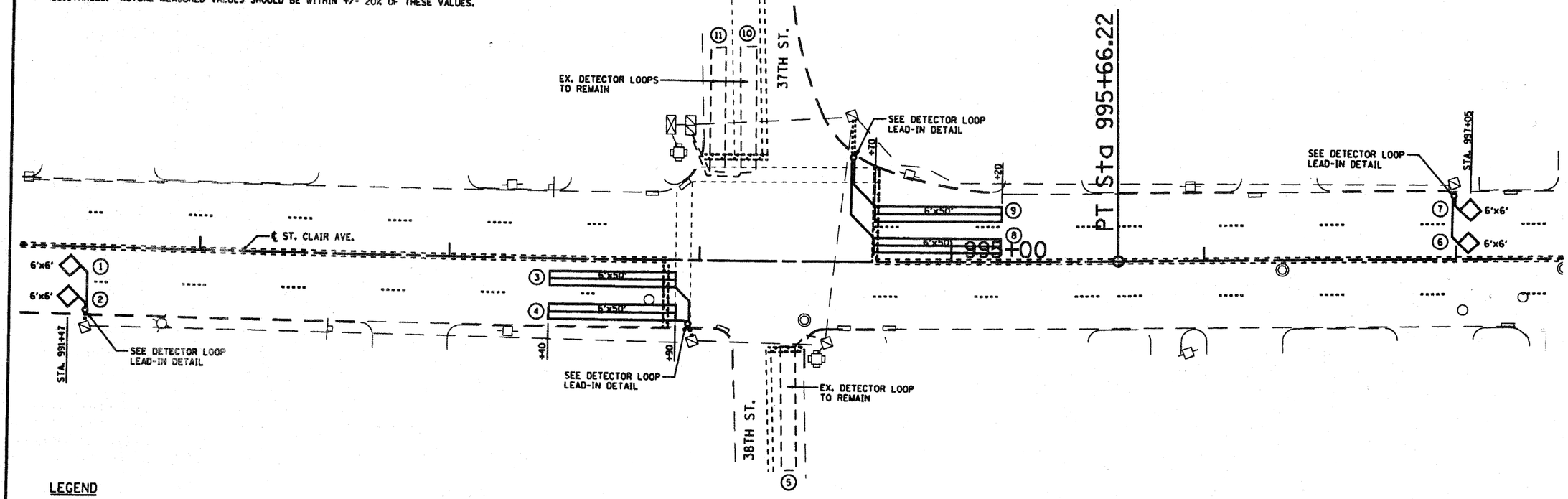

LEGEND

- EX. DETECTOR LOOP TO REMAIN
- EX. VISIBLE DETECTOR LOOP TO BE REPLACED
- BURIED DETECTOR LOOP TO BE REPLACED IF REQUIRED
- EX. TRAFFIC CONTROLLER BOX
- EX. HANDHOLE
- EX. DOUBLE HANDHOLE
- EX. TRAFFIC SIGNAL BASE
- EX. TRAFFIC CONTROLLER CONDUIT

SCHEDULE OF QUANTITIES		TOTAL QUANTITIES
ITEM	UNIT	
LOCATING UNDERGROUND CABLE	FOOT	40
DETECTOR LOOP REPLACEMENT	FOOT	871

20 0 20 40
SCALE IN FEET

FILE NAME = $FILEL$

Johnson, Depp & Quisenberry
CONSULTING ENGINEERS
Springfield, Illinois

USER NAME = $USER$
PLOT SCALE = $SCALE$
PLOT DATE = $DATE$

DESIGNED - CMV	REVISED -	
DRAWN - SJS	REVISED -	
CHECKED - CMV	REVISED -	
DATE - 10/21/2010	REVISED -	

STATE OF ILLINOIS
DEPARTMENT OF TRANSPORTATION

DETECTOR LOOP REPLACEMENT
ST. CLAIR AVE. & 37TH ST./38TH ST.

SCALE: | SHEET NO. OF SHEETS | STA. TO STA.

F.A.U. RTE.	SECTION	COUNTY	TOTAL SHEETS	SHEET NO.
9166	34-1RS-3	ST. CLAIR	87	70

CONTRACT NO. 76D96
ILLINOIS FED. AID PROJECT

DETECTOR LOOP REQUIREMENTS AND CALCULATIONS FOR ST. CLAIRE AVE AND IL RTE 111 (KINGSHIGHWAY)

ST. CLAIR & IL 111					
LOOP	PHASE #	FT. X FT.	CALCULATED INDUCTANCE MICROHENRIES (µH)	CALCULATED RESISTANCE OHMS (Ω)	REQUIRED # OF TURNS
1. EB A CCO	4	6 X 6	368.4	2.9	6
2. EB B CCO	4	6 X 6	364.4	2.9	6
3. EB LT CD	7	6 X 500	368.0	2.9	6
4. EB THRU A CD	4	6 X 500	368.0	2.9	6
5. EB THRU B CD	4	6 X 500	368.0	2.9	6
6. EB RT CD	4	6 X 500	368.0	2.9	6
7. NB LT CD	1	N/A	N/A	N/A	N/A
8. NB THRU A CD	6	N/A	N/A	N/A	N/A
9. NB THRU B CD	6	N/A	N/A	N/A	N/A
10. WB A CCO	3	6 X 6	364.4	2.9	6
11. WB B CCO	8	6 X 6	841.9	2.9	3-6-3
12. WB RT CCO	8	6 X 6	841.9	2.9	3-6-3
13. WB LT CD	3	6 X 500	816.4	2.3	3-6-3
14. WB THRU A CD	8	6 X 500	368.0	2.9	6
15. WB THRU B CD	8	6 X 500	368.0	2.9	6
16. WB RT CD	8	6 X 500	368.0	2.9	6
17. SB LT CD	5	N/A	N/A	N/A	N/A
18. SB THRU A CD	2	N/A	N/A	N/A	N/A
19. SB THRU B CD	2	N/A	N/A	N/A	N/A

THE ABOVE VALUES ARE CALCULATED OF COMBINED LOOP AND LEAD-IN INDUCTANCES AND RESISTANCES. ACTUAL MEASURED VALUES SHOULD BE WITHIN +/- 20% OF THESE VALUES.

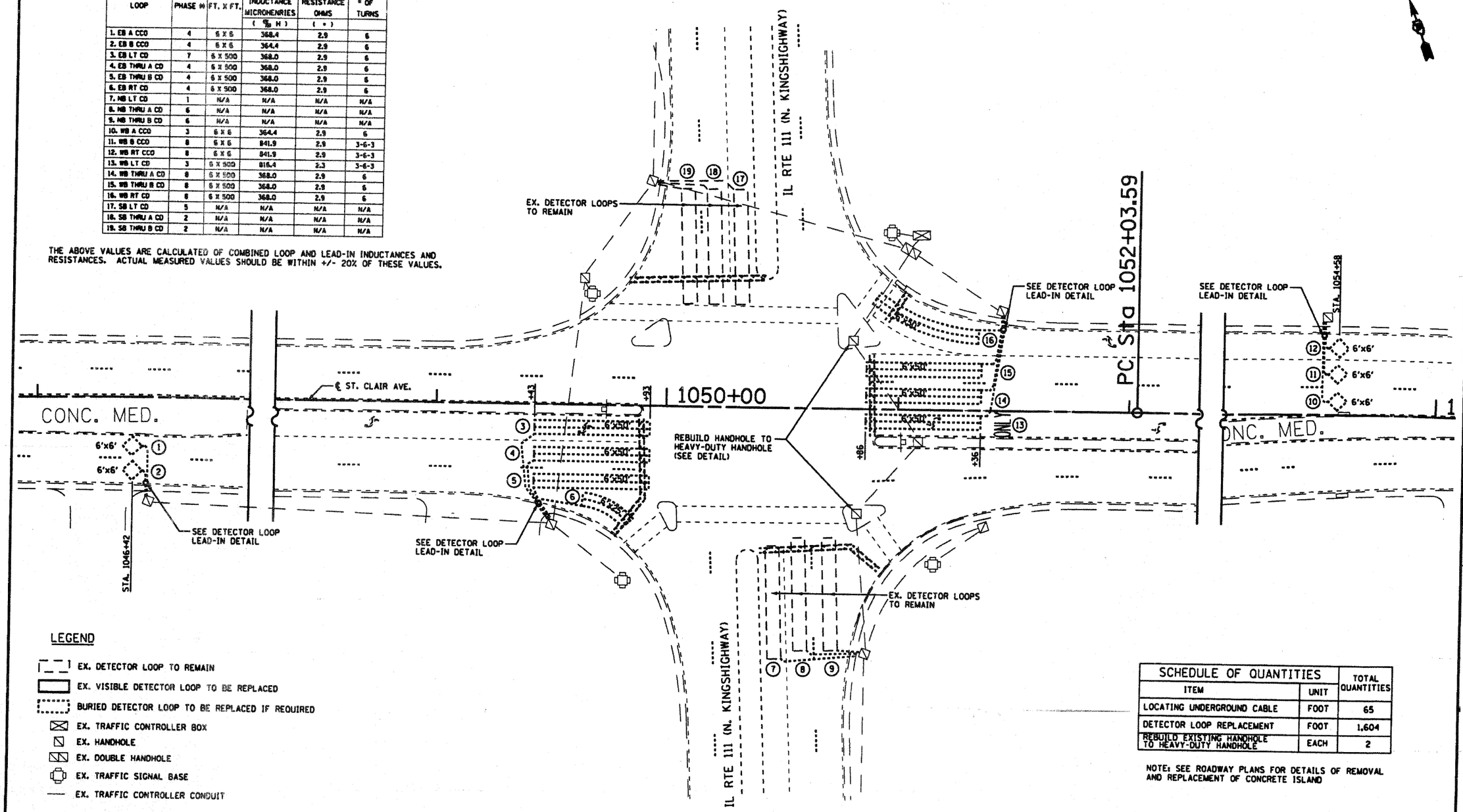

LEGEND

- EX. DETECTOR LOOP TO REMAIN
- EX. VISIBLE DETECTOR LOOP TO BE REPLACED
- BURIED DETECTOR LOOP TO BE REPLACED IF REQUIRED
- EX. TRAFFIC CONTROLLER BOX
- EX. HANDHOLE
- EX. DOUBLE HANDHOLE
- EX. TRAFFIC SIGNAL BASE
- EX. TRAFFIC CONTROLLER CONDUIT

SCHEDULE OF QUANTITIES		TOTAL QUANTITIES
ITEM	UNIT	
LOCATING UNDERGROUND CABLE	FOOT	65
DETECTOR LOOP REPLACEMENT	FOOT	1,604
REBUILD EXISTING HANDHOLE TO HEAVY-DUTY HANDHOLE	EACH	2

NOTE: SEE ROADWAY PLANS FOR DETAILS OF REMOVAL AND REPLACEMENT OF CONCRETE ISLAND

20 0 20 40
SCALE IN FEET

FILE NAME = $FILEL$

Adams, Day & Schneiderly
CONSULTING ENGINEERS
Springfield, Illinois

USER NAME = $USER$
PLOT SCALE = $SCALE$
PLOT DATE = $DATE$

DESIGNED - CMV
DRAWN - SJS
CHECKED - CMV
DATE - 10/21/2010

REVISED -
REVISED -
REVISED -
REVISED -

STATE OF ILLINOIS
DEPARTMENT OF TRANSPORTATION

DETECTOR LOOP REPLACEMENT
ST. CLAIR AVE. & IL RTE 111 (N. KINGSHIGHWAY)

SCALE: | SHEET NO. OF SHEETS | STA. TO STA.

F.A.U. RTE.	SECTION	COUNTY	TOTAL SHEETS	SHEET NO.
9166	34-1RS-3	ST. CLAIR	87	71

CONTRACT NO. 78D96

ILLINOIS FED. AID PROJECT

DETECTOR LOOP REQUIREMENTS AND CALCULATIONS FOR ST. CLAIRE AVE AND 79th ST.

ST. CLAIR & 79TH ST.					
LOOP	PHASE #	FT. X FT.	CALCULATED INDUCTANCE MICROHENRIES ($\frac{\mu}{m}$ H)	CALCULATED RESISTANCE OHMS (Ω)	REQUIRED # OF TURNS
1. EB A CCD	2	6 X 6	368.4	2.9	6
2. EB B CCD	2	6 X 6	364.4	2.9	6
3. EB LT CD	5	6 X 500	368.0	2.9	6
4. EB THRU A CD	2	6 X 500	364.4	2.9	6
5. EB THRU B CD	2	6 X 500	841.9	2.9	3-6-3
6. NB THRU CD	3	N/A	N/A	N/A	N/A
7. NB RT CD	3	N/A	N/A	N/A	N/A
8. WB A CCD	5	6 X 6	816.4	2.3	3-6-3
9. WB B CCD	5	6 X 6	816.4	2.3	3-6-3
10. WB LT CD	1	6 X 500	816.4	2.3	3-6-3
11. WB THRU A CD	5	6 X 500	816.4	2.3	3-6-3
12. WB THRU B CD	5	6 X 500	795.7	1.8	3-6-3
13. SN THRU CD	4	N/A	N/A	N/A	N/A
14. SB RT CD	4	N/A	N/A	N/A	N/A

THE ABOVE VALUES ARE CALCULATED OF COMBINED LOOP AND LEAD-IN INDUCTANCES AND RESISTANCES. ACTUAL MEASURED VALUES SHOULD BE WITHIN +/- 20% OF THESE VALUES.

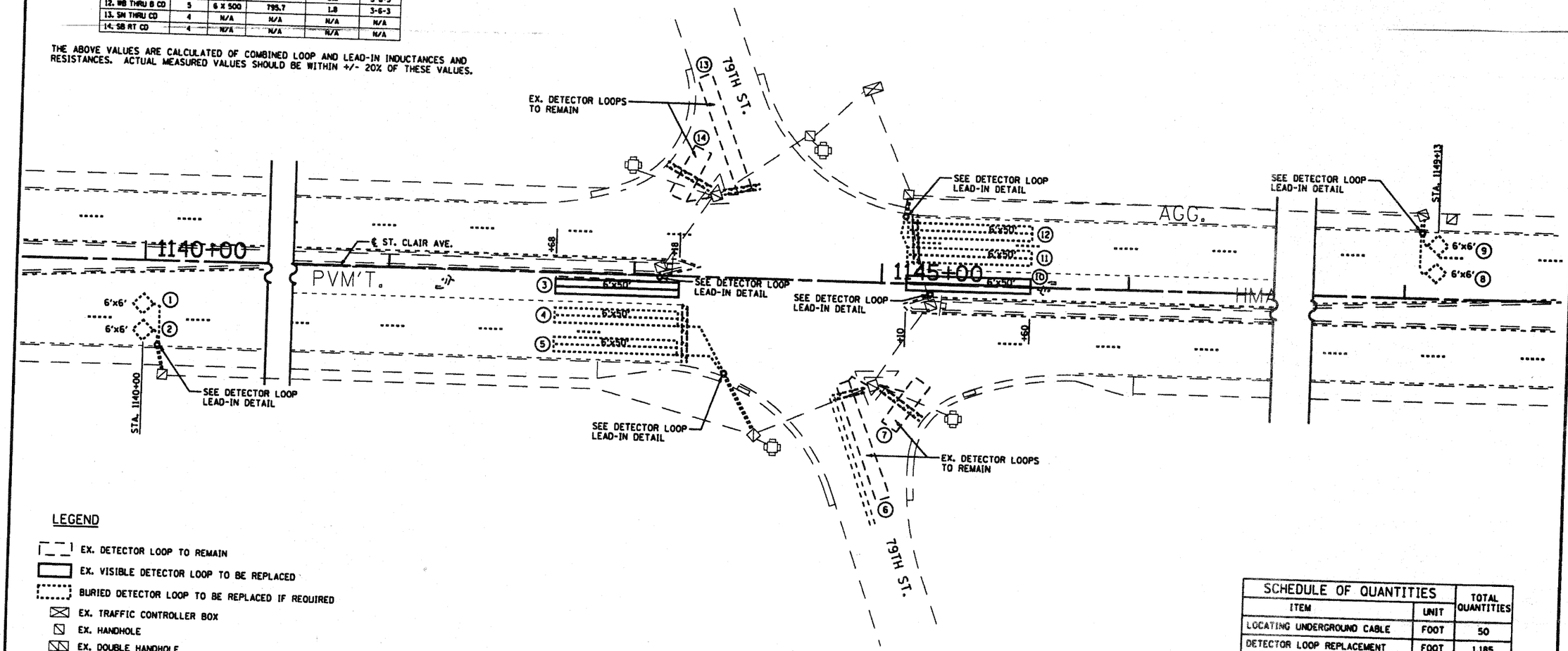

LEGEND

- EX. DETECTOR LOOP TO REMAIN
- EX. VISIBLE DETECTOR LOOP TO BE REPLACED
- BURIED DETECTOR LOOP TO BE REPLACED IF REQUIRED
- EX. TRAFFIC CONTROLLER BOX
- EX. HANDHOLE
- EX. DOUBLE HANDHOLE
- EX. TRAFFIC SIGNAL BASE
- EX. TRAFFIC CONTROLLER CONDUIT

SCHEDULE OF QUANTITIES		TOTAL QUANTITIES
ITEM	UNIT	
LOCATING UNDERGROUND CABLE	FOOT	50
DETECTOR LOOP REPLACEMENT	FOOT	1,185

20 0 20 40
SCALE IN FEET

FILE NAME = $FILEL$

Johnson, Depp & Quisenberry
CONSULTING ENGINEERS
Springfield, Illinois

USER NAME = $USER$
PLOT SCALE = $SCALE$
PLOT DATE = $DATE$

DESIGNED - CMV
DRAWN - SJS
CHECKED - CMV
DATE - 10/21/2010

REVISED -
REVISED -
REVISED -
REVISED -

STATE OF ILLINOIS
DEPARTMENT OF TRANSPORTATION

DETECTOR LOOP REPLACEMENT
ST. CLAIR AVE. & 79TH ST.

SCALE= | SHEET NO. OF SHEETS | STA. TO STA.

F.A.U. RTE.	SECTION	COUNTY	TOTAL SHEETS	SHEET NO.
9166	34-1RS-3	ST. CLAIR	87	72

CONTRACT NO. 76D66
ILLINOIS FED. AID PROJECT

DETECTOR LOOP REQUIREMENTS AND CALCULATIONS FOR ST. CLAIRE AVE AND IL RTE 157 (RAMPS 3 & 4)

ST. CLAIR & IL 157 RAMPS 3 & 4					
LOOP	PHASE #	FT. X FT.	CALCULATED INDUCTANCE MICROHENRIES (µH)	CALCULATED RESISTANCE OHMS (Ω)	REQUIRED # OF TURNS
1. EB A CCD	6	6 X 6	368.4	2.9	6
2. EB B CCD	6	6 X 6	364.4	2.9	6
3. EB LT CD	1	6 X 500	368.0	2.9	3-6-3
4. EB THRU A CD	6	6 X 500	364.4	2.9	3-6-3
5. EB THRU B CD	6	6 X 500	841.9	2.9	3-6-3
6. WB A CCD	2	6 X 6	841.9	2.9	6
7. WB B CCD	2	6 X 6	816.4	2.3	6
8. WB THRU A CD	2	6 X 500	795.7	1.8	3-6-3
9. WB THRU B CD	2	6 X 500	371.7	3.0	3-6-3
10. SB THRU CD	4	N/A	N/A	N/A	N/A
11. SB RT CD	4	N/A	N/A	N/A	N/A

THE ABOVE VALUES ARE CALCULATED OF COMBINED LOOP AND LEAD-IN INDUCTANCES AND RESISTANCES. ACTUAL MEASURED VALUES SHOULD BE WITHIN +/- 20% OF THESE VALUES.

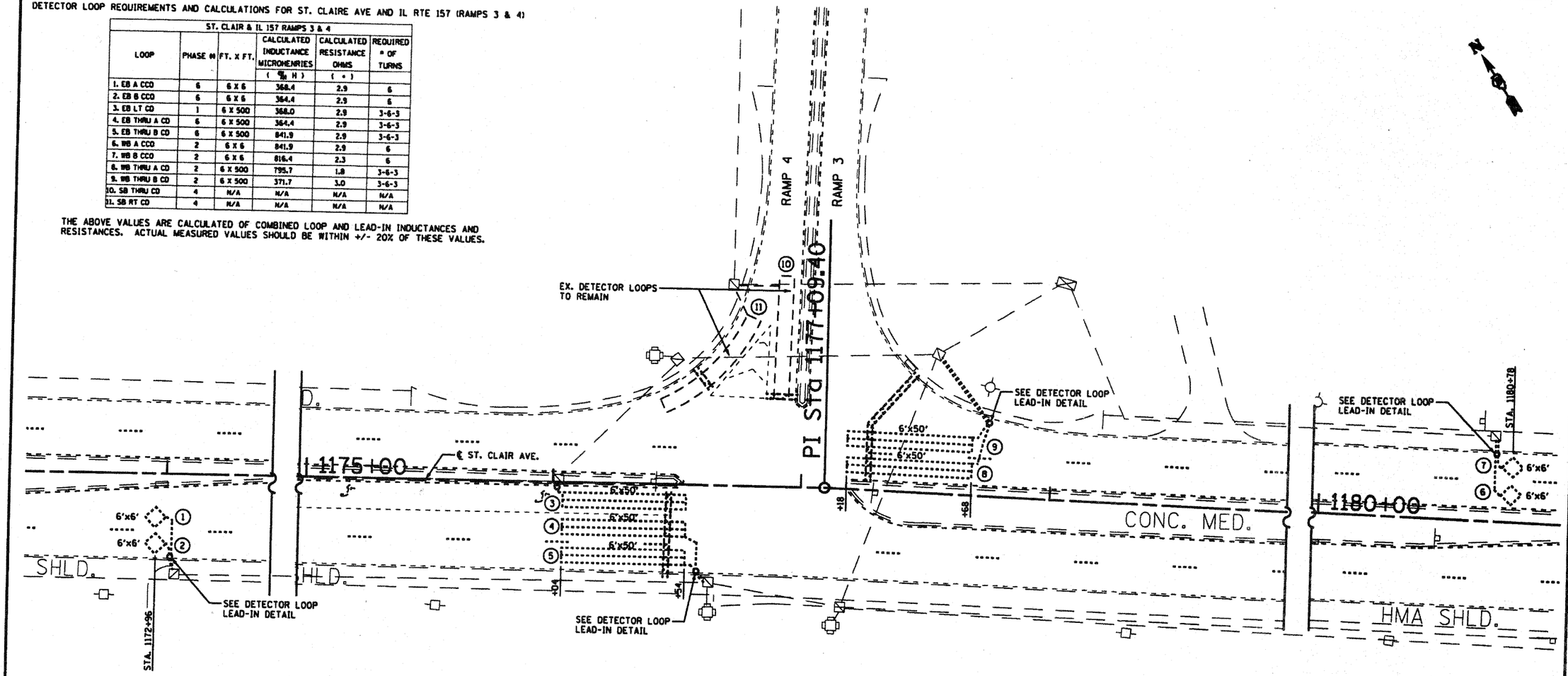

LEGEND

- EX. DETECTOR LOOP TO REMAIN
- EX. VISIBLE DETECTOR LOOP TO BE REPLACED
- BURIED DETECTOR LOOP TO BE REPLACED IF REQUIRED
- EX. TRAFFIC CONTROLLER BOX
- EX. HANDHOLE
- EX. DOUBLE HANDHOLE
- EX. TRAFFIC SIGNAL BASE
- EX. TRAFFIC CONTROLLER CONDUIT

SCHEDULE OF QUANTITIES		
ITEM	UNIT	TOTAL QUANTITIES
LOCATING UNDERGROUND CABLE	FOOT	45
DETECTOR LOOP REPLACEMENT	FOOT	1,004

20 0 20 40
SCALE IN FEET

FILE NAME = $FILEL$

Johnson, Depp & Quisenberry
CONSULTING ENGINEERS
Springfield, Illinois

USER NAME = $USER$	DESIGNED - CMV	REVISED -	
	DRAWN - SJS	REVISED -	
PLOT SCALE = $SCALE$	CHECKED - CMV	REVISED -	
PLOT DATE = $DATE$	DATE - 10/21/2010	REVISED -	

STATE OF ILLINOIS
DEPARTMENT OF TRANSPORTATION

DETECTOR LOOP REPLACEMENT
ST. CLAIR AVE. & IL 157 RAMPS 3 & 4

SCALE: | SHEET NO. OF SHEETS | STA. TO STA.

F.A.U. RTE.	SECTION	COUNTY	TOTAL SHEETS	SHEET NO.
9166	34-1RS-3	ST. CLAIR	87	73

CONTRACT NO. 76D96

ILLINOIS FED. AID PROJECT

DETECTOR LOOP REQUIREMENTS AND CALCULATIONS FOR ST. CLAIRE AVE AND IL RTE 157 (RAMPS 1 & 2)

ST. CLAIR & IL 157 RAMPS 1 & 2					
LOOP	PHASE #	FT. X FT.	CALCULATED INDUCTANCE MICROHENRIES (µH)	CALCULATED RESISTANCE OHMS (Ω)	REQUIRED # OF TURNS
1. EB A CCD	6	6 X 6	368.4	2.9	6
2. EB B CCD	6	6 X 6	364.4	2.9	6
3. EB LT CD	1	6 X 500	368.0	2.9	3-6-3
4. EB THRU A CD	6	6 X 500	364.4	2.9	3-6-3
5. EB THRU B CD	6	6 X 500	841.9	2.9	3-6-3
6. WB A CCD	2	6 X 6	841.9	2.9	6
7. WB B CCD	2	6 X 6	816.4	2.3	6
8. WB THRU A CD	2	6 X 500	795.7	1.8	3-6-3
9. WB THRU B CD	2	6 X 500	371.7	3.0	3-6-3
10. SB THRU CD	4	N/A	N/A	N/A	N/A
11. SB RT CD	4	N/A	N/A	N/A	N/A

THE ABOVE VALUES ARE CALCULATED OF COMBINED LOOP AND LEAD-IN INDUCTANCES AND RESISTANCES. ACTUAL MEASURED VALUES SHOULD BE WITHIN +/- 20% OF THESE VALUES.

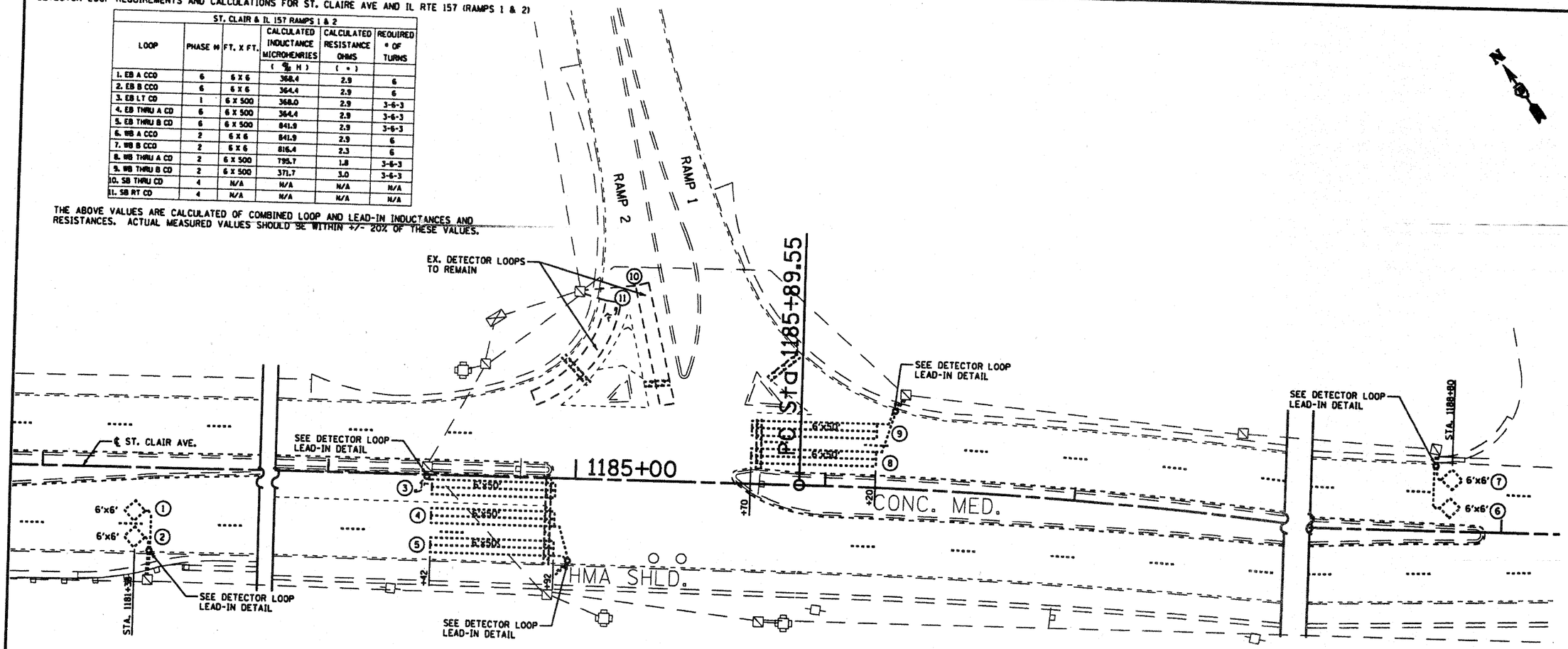

LEGEND

- EX. DETECTOR LOOP TO REMAIN
- EX. VISIBLE DETECTOR LOOP TO BE REPLACED
- BURIED DETECTOR LOOP TO BE REPLACED IF REQUIRED
- EX. TRAFFIC CONTROLLER BOX
- EX. HANDHOLE
- EX. DOUBLE HANDHOLE
- EX. TRAFFIC SIGNAL BASE
- EX. TRAFFIC CONTROLLER CONDUIT

SCHEDULE OF QUANTITIES		TOTAL QUANTITIES
ITEM	UNIT	
LOCATING UNDERGROUND CABLE	FOOT	45
DETECTOR LOOP REPLACEMENT	FOOT	1,007

20 0 20 40
SCALE IN FEET

FILE NAME = $FILE$

Johnson, Depp & Quisenberry
CONSULTING ENGINEERS
Springfield, Illinois

USER NAME = $USER$
PLOT SCALE = $SCALE$
PLOT DATE = $DATE$

DESIGNED - CMV
DRAWN - SJS
CHECKED - CMV
DATE - 10/21/2010

REVISED -
REVISED -
REVISED -
REVISED -

STATE OF ILLINOIS
DEPARTMENT OF TRANSPORTATION

DETECTOR LOOP REPLACEMENT
ST. CLAIR AVE. & IL 157 RAMPS 1 & 2

SCALE: | SHEET NO. OF SHEETS | STA. TO STA.

F.A.U. RTE.	SECTION	COUNTY	TOTAL SHEETS	SHEET NO.
9166	34-1RS-3	ST. CLAIR	87	74

CONTRACT NO. 76D96

ILLINOIS FED. AID PROJECT

DETECTOR LOOP REQUIREMENTS AND CALCULATIONS FOR ST. CLAIRE AVE AND 94th ST.

ST. CLAIR & 3RD AVE/N. 94TH ST.					
LOOP	PHASE #	FT. X FT.	CALCULATED INDUCTANCE MICROHENRIES (µH)	CALCULATED RESISTANCE OHMS (Ω)	REQUIRED # OF TURNS
1. EB 1A CCD	6	6 X 6	368.4	2.9	6
2. EB 1B CCD	6	6 X 6	364.4	2.9	6
3. EB LT CD	1	6 X 500	368.0	2.9	3-6-3
4. EB THRU A CD	6	6 X 500	364.4	2.9	3-6-3
5. EB THRU B CD	6	6 X 500	841.9	2.9	3-6-3
6. EB RT CD	6	6 X 500	841.9	2.9	3-6-3
7. NB THRU CD	4	N/A	N/A	N/A	N/A
8. NB RT CD	4	N/A	N/A	N/A	N/A
9. EB 2A CCD	2	6 X 6	841.9	2.9	6
10. EB 2B CCD	2	6 X 6	841.9	2.9	6
11. WB LT CD	5	6 X 500	816.4	2.3	3-6-3
12. WB THRU A CD	2	6 X 500	795.7	1.8	3-6-3
13. WB THRU B CD	2	6 X 500	371.7	3.0	3-6-3
14. SB THRU CD	3	N/A	N/A	N/A	N/A

THE ABOVE VALUES ARE CALCULATED OF COMBINED LOOP AND LEAD-IN INDUCTANCES AND RESISTANCES. ACTUAL MEASURED VALUES SHOULD BE WITHIN +/- 20% OF THESE VALUES.

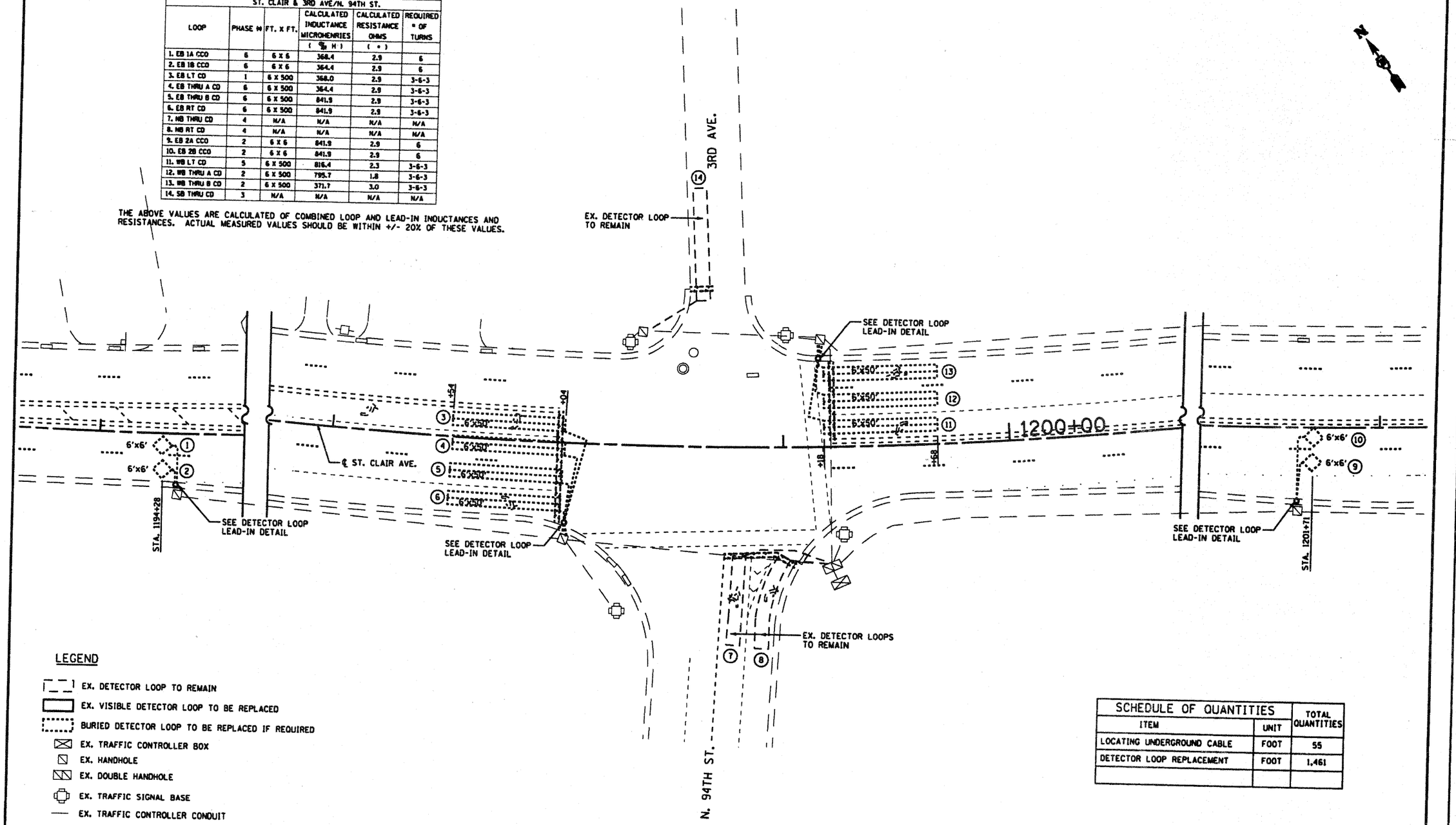

LEGEND

- EX. DETECTOR LOOP TO REMAIN
- EX. VISIBLE DETECTOR LOOP TO BE REPLACED
- BURIED DETECTOR LOOP TO BE REPLACED IF REQUIRED
- EX. TRAFFIC CONTROLLER BOX
- EX. HANDHOLE
- EX. DOUBLE HANDHOLE
- EX. TRAFFIC SIGNAL BASE
- EX. TRAFFIC CONTROLLER CONDUIT

SCHEDULE OF QUANTITIES		
ITEM	UNIT	TOTAL QUANTITIES
LOCATING UNDERGROUND CABLE	FOOT	55
DETECTOR LOOP REPLACEMENT	FOOT	1,461

20 0 20 40
SCALE IN FEET

FILE NAME = $FILEL$

Johnson, Depp & Quisenberry
CONSULTING ENGINEERS
Springfield, Illinois

USER NAME = $USER$
PLOT SCALE = $SCALE$
PLOT DATE = $DATE$

DESIGNED - CMV
DRAWN - SJS
CHECKED - CMV
DATE - 10/21/2010

REVISED -
REVISED -
REVISED -
REVISED -

STATE OF ILLINOIS
DEPARTMENT OF TRANSPORTATION

DETECTOR LOOP REPLACEMENT
ST. CLAIR AVE. & 3RD AVE./N. 94TH ST.

SCALE: | SHEET NO. OF SHEETS | STA. TO STA.

F.A.U. RTE.	SECTION	COUNTY	TOTAL SHEETS	SHEET NO.
9166	34-1RS-3	ST. CLAIR	87	75

CONTRACT NO. 76D96

ILLINOIS FED. AID PROJECT

DETECTOR LOOP REQUIREMENTS AND CALCULATIONS FOR ST. CLAIRE AVE AND IL RTE 161

ST. CLAIR & IL 161					
LOOP	PHASE #	FT. X FT.	CALCULATED INDUCTANCE MICROHENRIES (µH)	CALCULATED RESISTANCE OHMS (Ω)	REQUIRED # OF TURNS
1. EB THRU A CD	6	6 X 500	368.4	2.9	3-6-3
2. EB THRU B CD	6	6 X 500	364.4	2.9	3-6-3
3. NB LT CD	4	N/A	N/A	N/A	N/A
4. NB THRU CD	4	N/A	N/A	N/A	N/A
5. WB 1A CCO	2	6 X 6	841.9	2.9	6
6. WB 1B CCO	2	6 X 6	841.9	2.9	6
7. WB LT CCO	2	6 X 6	816.4	2.3	6
8. WB LT CD	5	6 X 500	795.7	1.8	3-6-3
9. WB THRU A CD	2	6 X 500	795.7	1.8	3-6-4
10. WB THRU B CD	2	6 X 500	795.7	1.8	3-6-5
11. WB 2A CCO	2	6 X 6	371.7	3.0	6
12. WB 2B CCO	2	6 X 6	367.7	2.9	6

THE ABOVE VALUES ARE CALCULATED OF COMBINED LOOP AND LEAD-IN INDUCTANCES AND RESISTANCES. ACTUAL MEASURED VALUES SHOULD BE WITHIN +/- 20% OF THESE VALUES.

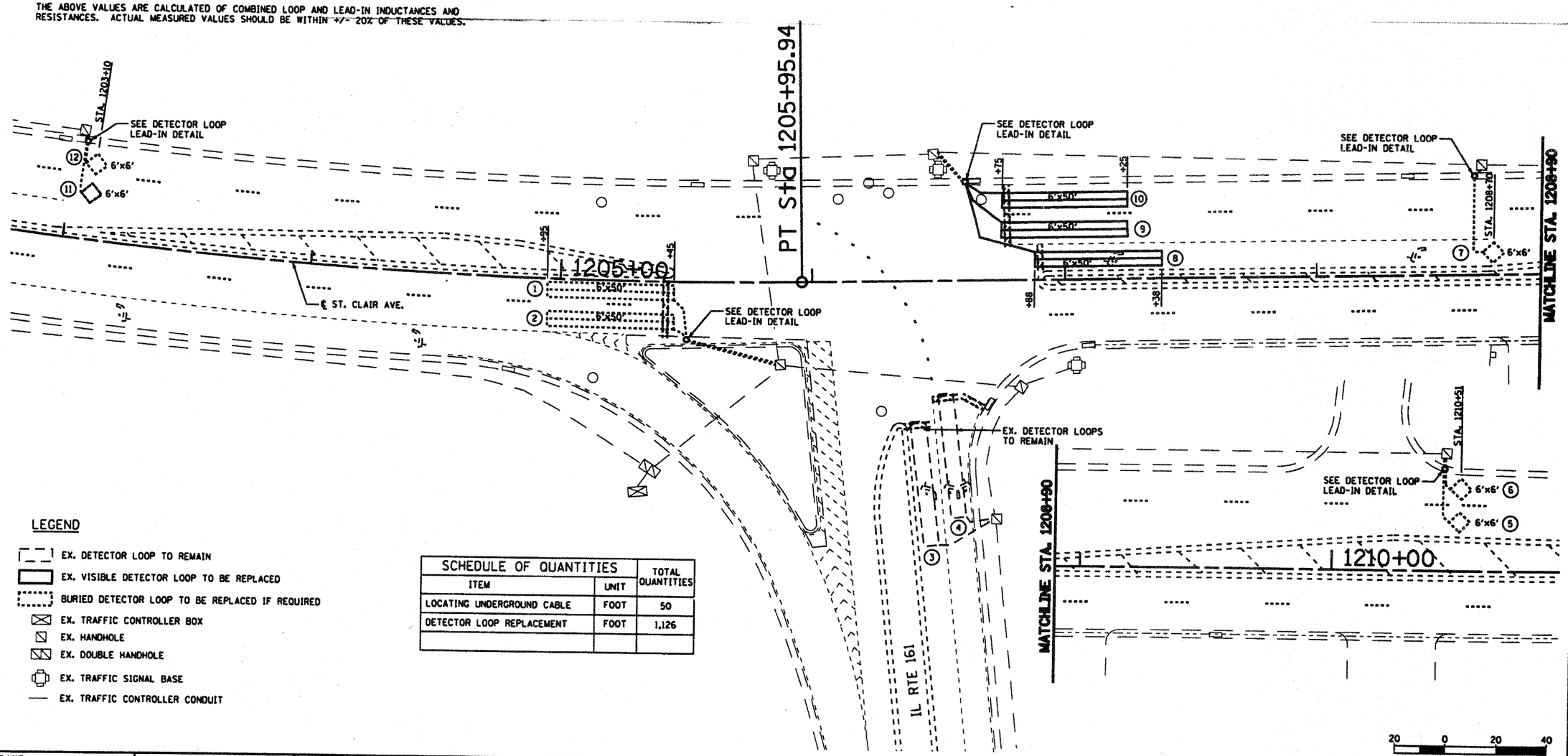

LEGEND

- EX. DETECTOR LOOP TO REMAIN
- EX. VISIBLE DETECTOR LOOP TO BE REPLACED
- BURIED DETECTOR LOOP TO BE REPLACED IF REQUIRED
- EX. TRAFFIC CONTROLLER BOX
- EX. HANDHOLE
- EX. DOUBLE HANDHOLE
- EX. TRAFFIC SIGNAL BASE
- EX. TRAFFIC CONTROLLER CONDUIT

SCHEDULE OF QUANTITIES		
ITEM	UNIT	TOTAL QUANTITIES
LOCATING UNDERGROUND CABLE	FOOT	50
DETECTOR LOOP REPLACEMENT	FOOT	1,126

FILE NAME = $FILEL$

Johnson, Depp & Quisenberry
CONSULTING ENGINEERS
Springfield, Illinois

USER NAME = $USER$
PLOT SCALE = $SCALE$
PLOT DATE = $DATE$

DESIGNED - CMV
DRAWN - SJS
CHECKED - CMV
DATE - 10/21/2010

REVISED -
REVISED -
REVISED -
REVISED -

STATE OF ILLINOIS
DEPARTMENT OF TRANSPORTATION

DETECTOR LOOP REPLACEMENT
ST. CLAIR AVE. & IL RTE 161

SCALE: | SHEET NO. OF SHEETS | STA. TO STA.

F.A.U. RTE.	SECTION	COUNTY	TOTAL SHEETS	SHEET NO.
9166	34-1RS-3	ST. CLAIR	87	76

CONTRACT NO. 78D96

ILLINOIS FED. AID PROJECT

DETECTOR LOOP REQUIREMENTS AND CALCULATIONS FOR ST. CLAIRE AVE AND BUNKUM RD.

LOOP	PHASE #	FT. X FT.	CALCULATED INDUCTANCE MICROHENRIES (μH)	CALCULATED RESISTANCE OHMS (Ω)	REQUIRED # OF TURNS
1. EB A CCD	6	6 X 6	368.4	2.9	6
2. EB B CCD	6	6 X 6	364.4	2.9	6
3. EB LT CD	1	6 X 500	368.0	2.9	3-6-3
4. EB THRU A CD	6	6 X 500	364.4	2.9	3-6-3
5. EB THRU B CD	6	6 X 500	364.4	2.9	3-6-3
6. NB LT CD	3	N/A	N/A	N/A	N/A
7. NB THRU CD	3	N/A	N/A	N/A	N/A
8. NB RT CD	3	N/A	N/A	N/A	N/A
9. WB A CCD	2	6 X 6	364.4	2.9	6
10. WB B CCD	2	6 X 6	364.4	2.9	6
11. WB LT CD	5	6 X 500	841.9	2.9	3-6-3
12. WB THRU A CD	2	6 X 500	841.9	2.9	3-6-3
13. WB THRU B CD	2	6 X 500	816.4	2.3	3-6-3
14. SB LT CD	4	N/A	N/A	N/A	N/A
15. SB THRU CD	4	N/A	N/A	N/A	N/A
16. SB RT CD	4	N/A	N/A	N/A	N/A

THE ABOVE VALUES ARE CALCULATED OF COMBINED LOOP AND LEAD-IN INDUCTANCES AND RESISTANCES. ACTUAL MEASURED VALUES SHOULD BE WITHIN +/- 20% OF THESE VALUES.

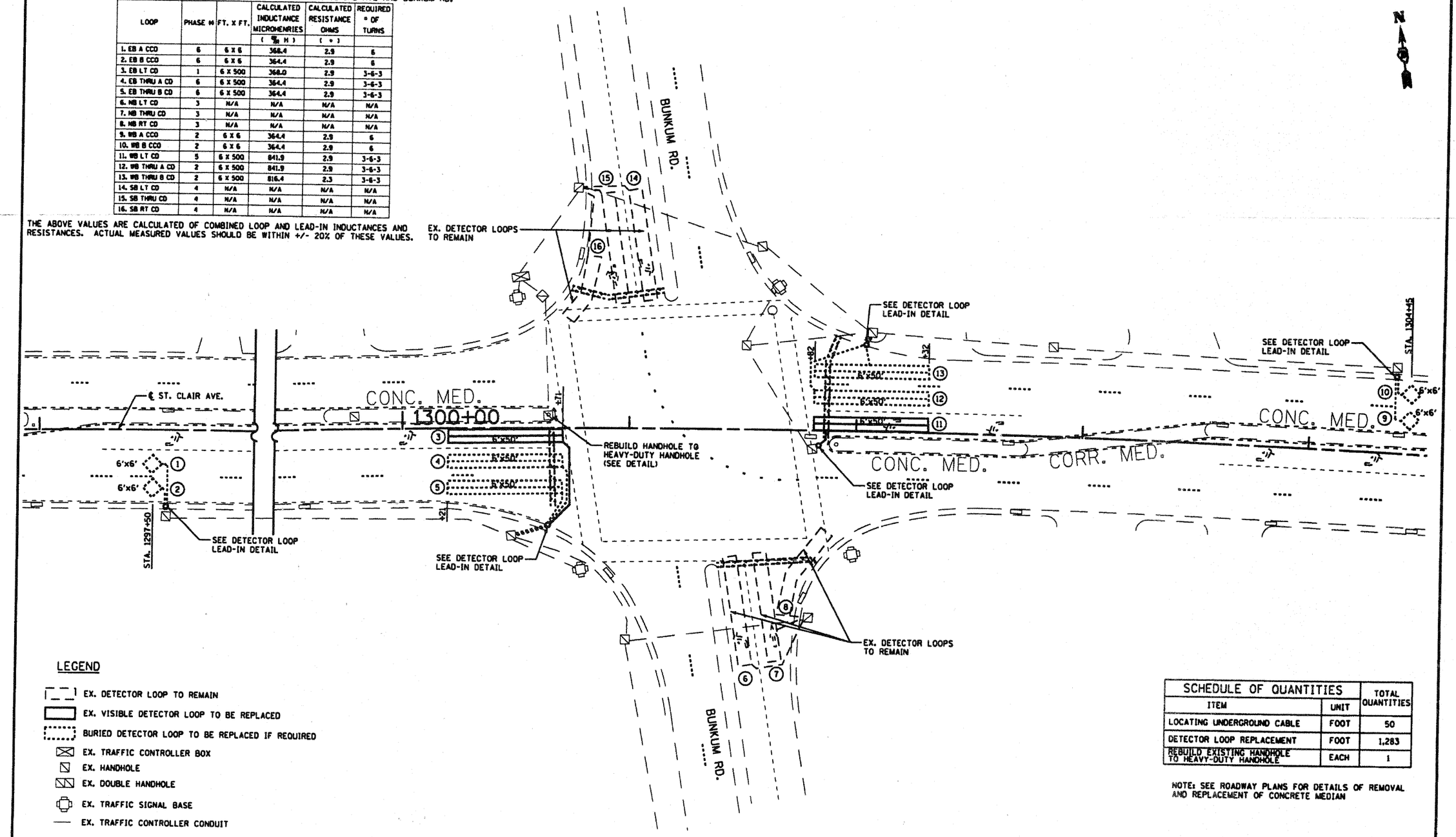

LEGEND

- EX. DETECTOR LOOP TO REMAIN
- EX. VISIBLE DETECTOR LOOP TO BE REPLACED
- BURIED DETECTOR LOOP TO BE REPLACED IF REQUIRED
- EX. TRAFFIC CONTROLLER BOX
- EX. HANDHOLE
- EX. DOUBLE HANDHOLE
- EX. TRAFFIC SIGNAL BASE
- EX. TRAFFIC CONTROLLER CONDUIT

SCHEDULE OF QUANTITIES		TOTAL QUANTITIES
ITEM	UNIT	
LOCATING UNDERGROUND CABLE	FOOT	50
DETECTOR LOOP REPLACEMENT	FOOT	1,283
REBUILD EXISTING HANDHOLE TO HEAVY-DUTY HANDHOLE	EACH	1

NOTE: SEE ROADWAY PLANS FOR DETAILS OF REMOVAL AND REPLACEMENT OF CONCRETE MEDIAN

20 0 20 40
SCALE IN FEET

FILE NAME = @FILE@	USER NAME = @USER@	DESIGNED - CMV	REVISED -
Johnson, Depp & Quisenberry CONSULTING ENGINEERS Springfield, Illinois		DRAWN - SJS	REVISED -
	PLOT SCALE = @SCALE@	CHECKED - CMV	REVISED -
	PLOT DATE = @DATE@	DATE - 10/21/2010	REVISED -

STATE OF ILLINOIS
DEPARTMENT OF TRANSPORTATION

DETECTOR LOOP REPLACEMENT
ST. CLAIR AVE. & BUNKUM RD.

SCALE: | SHEET NO. OF SHEETS | STA. TO STA.

F.A.U. RTE.	SECTION	COUNTY	TOTAL SHEETS	SHEET NO.
9166	34-1RS-3	ST. CLAIR	87	77

CONTRACT NO. 76D96

ILLINOIS FED. AID PROJECT

DETECTOR LOOP REQUIREMENTS AND CALCULATIONS FOR LINCOLN TRAIL AND POTOMAC DR.

LINCOLN TRAIL & POTOMAC DR.					
LOOP	PHASE #	FT. X FT.	CALCULATED INDUCTANCE MICROHENRIES (μH)	CALCULATED RESISTANCE OHMS (Ω)	REQUIRED # OF TURNS
1. EB A CCD	2	6 X 6	368.4	2.9	6
2. EB B CCD	6	6 X 6	364.4	2.9	6
3. EB LT CD	1	6 X 500	368.0	2.9	3-6-3
4. EB THRU A CD	6	6 X 500	364.4	2.9	3-6-3
5. EB THRU B CD	6	6 X 500	364.4	2.9	3-6-3
6. EB RT CD	6	6 X 500	364.4	2.9	3-6-3
7. NB THRU CD	4	N/A	N/A	N/A	
8. NB RT CD	4	N/A	N/A	N/A	
9. WB A CCD	2	6 X 6	364.4	2.9	6
10. WB B CCD	2	6 X 6	364.4	2.9	6
11. WB LT CD	5	6 X 500	841.9	2.9	3-6-3
12. WB THRU A CD	2	6 X 500	841.9	2.9	3-6-3
13. WB THRU B CD	2	6 X 500	816.4	2.3	3-6-3
14. WB RT CD	2	6 X 500	795.7	1.8	3-6-3
15. SB THRU CD	3	N/A	N/A	N/A	
16. SB RT CD	3	N/A	N/A	N/A	

THE ABOVE VALUES ARE CALCULATED OF COMBINED LOOP AND LEAD-IN INDUCTANCES AND RESISTANCES. ACTUAL MEASURED VALUES SHOULD BE WITHIN +/- 20% OF THESE VALUES.

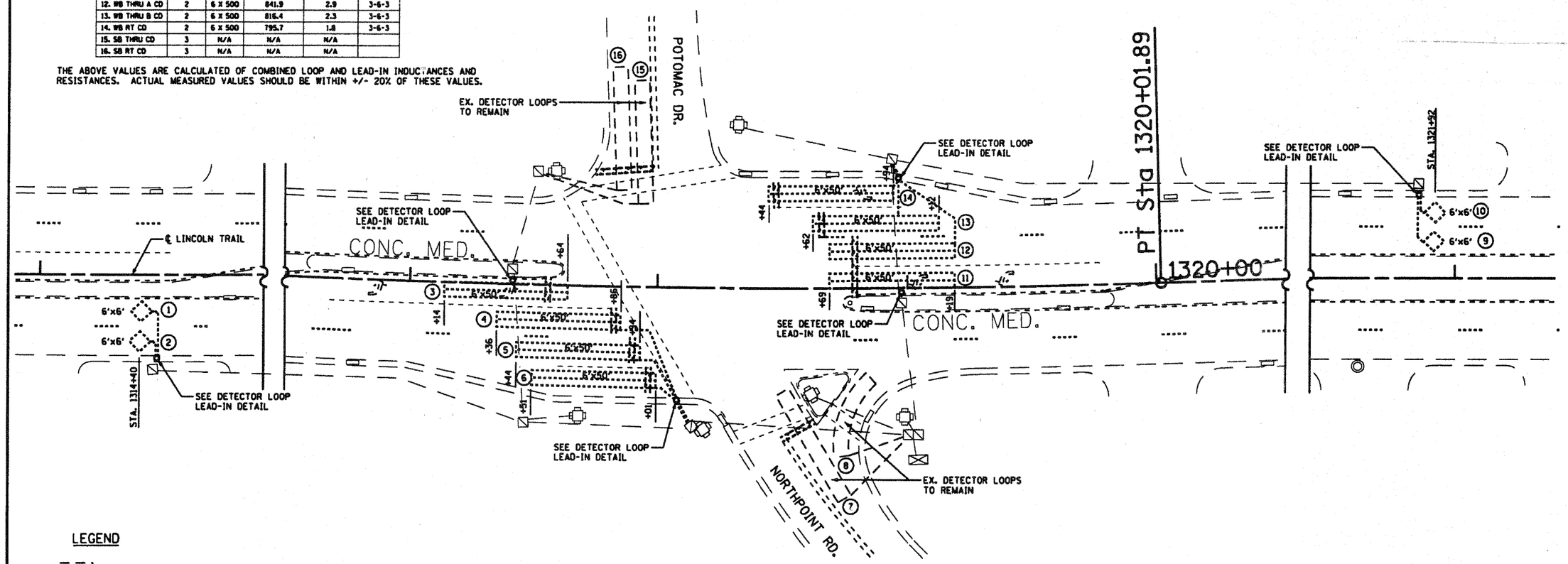

LEGEND

- EX. DETECTOR LOOP TO REMAIN
- EX. VISIBLE DETECTOR LOOP TO BE REPLACED
- BURIED DETECTOR LOOP TO BE REPLACED IF REQUIRED
- EX. TRAFFIC CONTROLLER BOX
- EX. HANDHOLE
- EX. DOUBLE HANDHOLE
- EX. TRAFFIC SIGNAL BASE
- EX. TRAFFIC CONTROLLER CONDUIT

SCHEDULE OF QUANTITIES		TOTAL QUANTITIES
ITEM	UNIT	
LOCATING UNDERGROUND CABLE	FOOT	60
DETECTOR LOOP REPLACEMENT	FOOT	1,581

20 0 20 40
SCALE IN FEET

FILE NAME = $FILEL$	USER NAME = $USER$	DESIGNED - CMV	REVISED -
Johnson, Depp & Quisenberry CONSULTING ENGINEERS Springfield, Illinois		DRAWN - SJS	REVISED -
	PLOT SCALE = $SCALE$	CHECKED - CMV	REVISED -
	PLOT DATE = $DATE$	DATE - 10/21/2010	REVISED -

STATE OF ILLINOIS
DEPARTMENT OF TRANSPORTATION

DETECTOR LOOP REPLACEMENT
LINCOLN TRAIL & POTOMAC DR.

SCALE: | SHEET NO. OF SHEETS | STA. TO STA.

F.A.U. RTE.	SECTION	COUNTY	TOTAL SHEETS	SHEET NO.
9166	34-1RS-3	ST. CLAIR	87	78

CONTRACT NO. 76D96

ILLINOIS FED. AID PROJECT

DETECTOR LOOP REQUIREMENTS AND CALCULATIONS FOR LINCOLN TRAIL AND MARK DR./UNION HILL DR.

LINCOLN TRAIL & MARK DR./UNION HILL RD.					
LOOP	PHASE #	FT. X FT.	CALCULATED INDUCTANCE MICROHENRIES (µH)	CALCULATED RESISTANCE OHMS (Ω)	REQUIRED # OF TURNS
1. EB LT CD	1	6 X 500	368.4	2.9	3-6-3
2. EB THRU A CD	6	6 X 500	364.4	2.9	3-6-3
3. EB THRU B CD	6	6 X 500	368.0	2.9	3-6-3
4. EB RT CD	6	6 X 500	364.4	2.9	3-6-3
5. NB LT CD	4	N/A	N/A	N/A	N/A
6. NB THRU CD	4	N/A	N/A	N/A	N/A
7. WB LT CD	5	6 X 500	816.4	2.3	3-6-3
8. WB THRU A CD	2	6 X 500	795.7	1.8	3-6-3
9. WB THRU B CD	2	6 X 500	371.7	3.0	3-6-3
10. WB RT CD	2	6 X 500	371.7	3.0	3-6-3
11. SB THRU CD	3	N/A	N/A	N/A	N/A

THE ABOVE VALUES ARE CALCULATED OF COMBINED LOOP AND LEAD-IN INDUCTANCES AND RESISTANCES. ACTUAL MEASURED VALUES SHOULD BE WITHIN +/- 20% OF THESE VALUES.

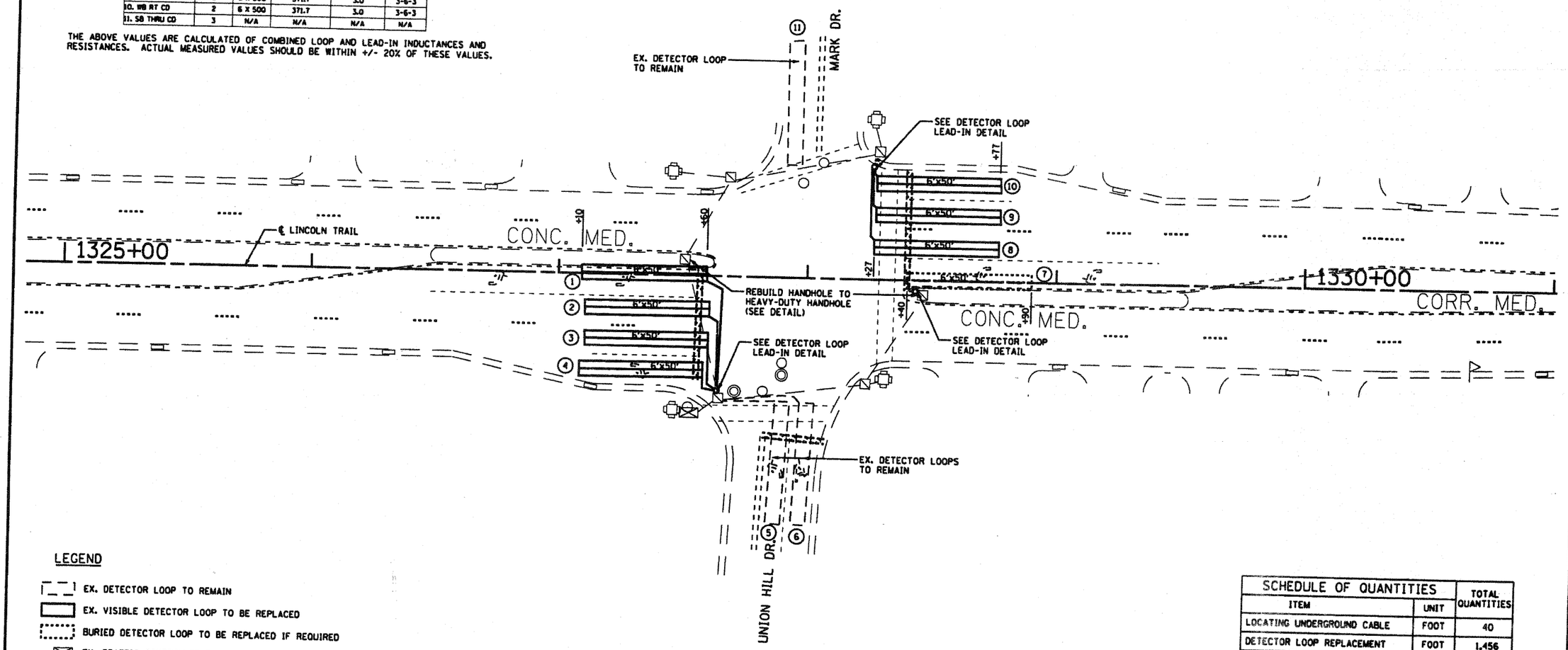

LEGEND

- EX. DETECTOR LOOP TO REMAIN
- EX. VISIBLE DETECTOR LOOP TO BE REPLACED
- BURIED DETECTOR LOOP TO BE REPLACED IF REQUIRED
- EX. TRAFFIC CONTROLLER BOX
- EX. HANDHOLE
- EX. DOUBLE HANDHOLE
- EX. TRAFFIC SIGNAL BASE
- EX. TRAFFIC CONTROLLER CONDUIT

SCHEDULE OF QUANTITIES		TOTAL QUANTITIES
ITEM	UNIT	
LOCATING UNDERGROUND CABLE	FOOT	40
DETECTOR LOOP REPLACEMENT	FOOT	1,456
REBUILD EXISTING HANDHOLE TO HEAVY-DUTY HANDHOLE	EACH	2

NOTE: SEE ROADWAY PLANS FOR DETAILS OF REMOVAL AND REPLACEMENT OF CONCRETE MEDIAN.

NEW DETECTOR LOOPS SHALL BE CENTERED WITHIN THE LANES AS SHOWN ON THE PROPOSED STRIPING PLAN.

20 0 20 40
SCALE IN FEET

FILE NAME = $FILEL$	USER NAME = $USER$	DESIGNED - CMV	REVISED -
Adams, Day & Schwarzberg CONSULTING ENGINEERS Springfield, Illinois		DRAWN - SJS	REVISED -
	PLOT SCALE = $SCALE$	CHECKED - CMV	REVISED -
	PLOT DATE = $DATE$	DATE - 10/21/2010	REVISED -

STATE OF ILLINOIS
DEPARTMENT OF TRANSPORTATION

DETECTOR LOOP REPLACEMENT
LINCOLN TRAIL & MARK DR./UNION HILL DR.

SCALE: | SHEET NO. OF SHEETS | STA. TO STA.

F.A.U. RTE.	SECTION	COUNTY	TOTAL SHEETS	SHEET NO.
9166	34-1RS-3	ST. CLAIR	87	79

CONTRACT NO. 76D88

ILLINOIS FED. AID PROJECT

DETECTOR LOOP REQUIREMENTS AND CALCULATIONS FOR LINCOLN TRAIL AND RUBY LN.

LINCOLN TRAIL & RUBY LN.					
LOOP	PHASE #	FT. X FT.	CALCULATED INDUCTANCE MICROHENRIES (µH)	CALCULATED RESISTANCE OHMS (Ω)	REQUIRED # OF TURNS
1. EB LT CD	1	6 X 500	368.4	2.9	6
2. EB THRU A CD	6	6 X 500	364.4	2.9	6
3. EB THRU B CD	6	6 X 500	368.0	2.9	6
4. EB RT CD	6	6 X 500	364.4	2.9	6
5. NB LT CD	4	N/A	N/A	N/A	N/A
6. NB THRU CD	4	N/A	N/A	N/A	N/A
7. WB LT CD	2	6 X 500	841.9	2.9	3-6-3
8. WB THRU A CD	5	6 X 500	841.9	2.9	3-6-3
9. WB THRU B CD	2	6 X 500	841.9	2.9	3-6-3
10. WB RT CD	2	6 X 500	841.9	2.9	3-6-3
11. SB LT CD	5	N/A	N/A	N/A	N/A
12. SB THRU CD	5	N/A	N/A	N/A	N/A
13. SB RT CD	5	N/A	N/A	N/A	N/A
14. WB A CCD	2	6 X 6	371.7	3.0	6
15. WB B CCD	2	6 X 6	367.7	2.9	6

THE ABOVE VALUES ARE CALCULATED OF COMBINED LOOP AND LEAD-IN INDUCTANCES AND RESISTANCES. ACTUAL MEASURED VALUES SHOULD BE WITHIN +/- 20% OF THESE VALUES.

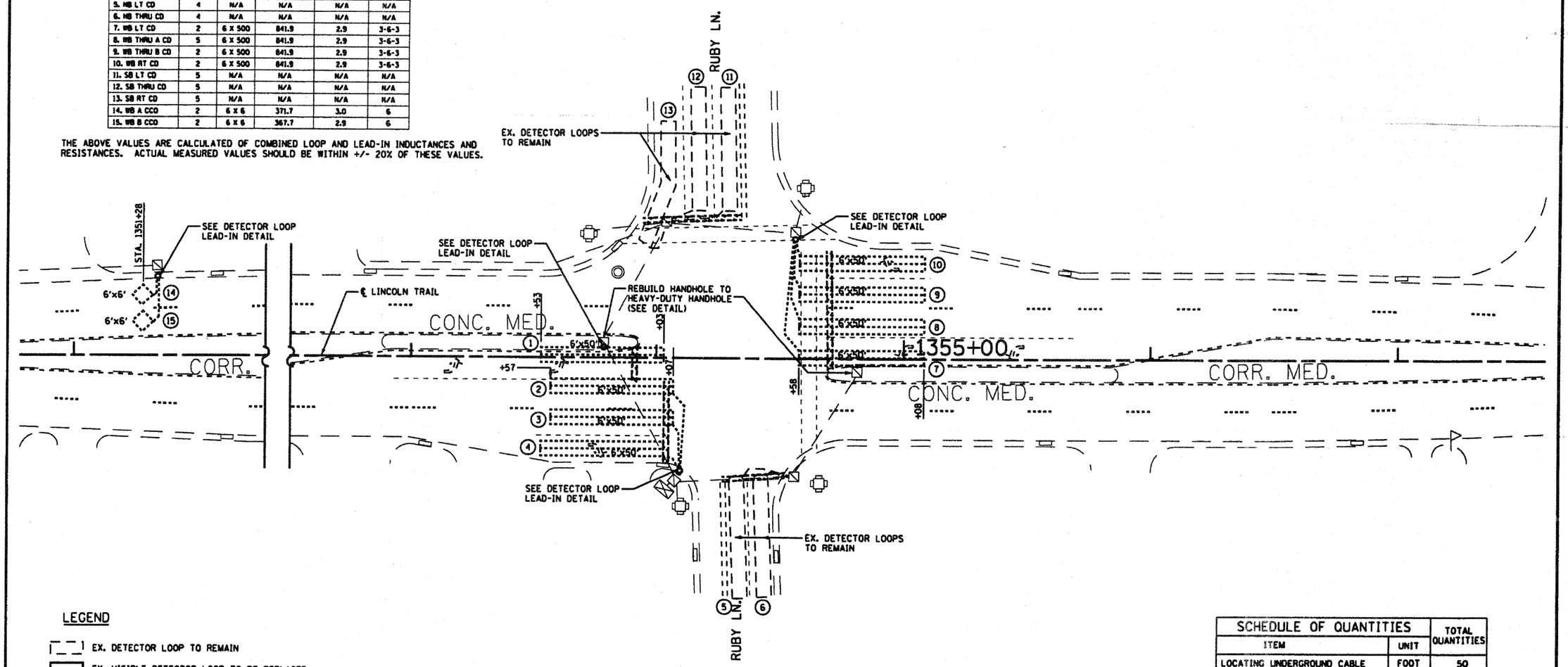

LEGEND

- EX. DETECTOR LOOP TO REMAIN
- EX. VISIBLE DETECTOR LOOP TO BE REPLACED
- BURIED DETECTOR LOOP TO BE REPLACED IF REQUIRED
- EX. TRAFFIC CONTROLLER BOX
- EX. HANDHOLE
- EX. DOUBLE HANDHOLE
- EX. TRAFFIC SIGNAL BASE
- EX. TRAFFIC CONTROLLER CONDUIT

SCHEDULE OF QUANTITIES		TOTAL QUANTITIES
ITEM	UNIT	
LOCATING UNDERGROUND CABLE	FOOT	50
DETECTOR LOOP REPLACEMENT	FOOT	1,537
REBUILD EXISTING HANDHOLE TO HEAVY-DUTY HANDHOLE	EACH	2

NOTE: SEE ROADWAY PLANS FOR DETAILS OF REMOVAL AND REPLACEMENT OF CONCRETE MEDIAN.

NEW DETECTOR LOOPS SHALL BE CENTERED WITHIN THE LANES AS SHOWN ON THE PROPOSED STRIPING PLAN.

20 0 20 40
SCALE IN FEET

FILE NAME = $FILEL$	USER NAME = $USER$	DESIGNED - CMV	REVISED -
Johnson, Depp & Quisenberry CONSULTING ENGINEERS Springfield, Illinois		DRAWN - SJS	REVISED -
	PLOT SCALE = $SCALE$	CHECKED - CMV	REVISED -
	PLOT DATE = $DATE$	DATE - 10/21/2010	REVISED -

STATE OF ILLINOIS
DEPARTMENT OF TRANSPORTATION

DETECTOR LOOP REPLACEMENT
LINCOLN TRAIL & RUBY LN.

SCALE: | SHEET NO. OF SHEETS | STA. TO STA.

F.A.U. RTE.	SECTION	COUNTY	TOTAL SHEETS	SHEET NO.
9166	34-1RS-3	ST. CLAIR	87	80

CONTRACT NO. 76D96

ILLINOIS FED. AID PROJECT

DETECTOR LOOP REQUIREMENTS AND CALCULATIONS FOR LINCOLN TRAIL AND COMMERCE LN.

LINCOLN TRAIL & COMMERCE LN.					
LOOP	PHASE #	FT. X FT.	CALCULATED INDUCTANCE MICROHENRIES (µH)	CALCULATED RESISTANCE OHMS (Ω)	REQUIRED # OF TURNS
1. EB LT CD	5	6 X 500	368.4	2.9	3-6-3
2. EB THRU A CD	2	6 X 500	364.4	2.9	3-6-3
3. EB THRU B CD	2	6 X 500	368.0	2.9	3-6-3
4. NB THRU A CD	4	N/A	N/A	N/A	N/A
5. NB THRU B CD	4	N/A	N/A	N/A	N/A
6. WB LT CD	1	6 X 500	841.9	2.9	3-6-3
7. WB THRU A CD	6	6 X 500	841.9	2.9	3-6-3
8. WB THRU B CD	6	6 X 500	841.9	2.9	3-6-3
9. WB RT CD	6	6 X 500	841.9	2.9	3-6-3
10. SB THRU A CD	3	N/A	N/A	N/A	N/A
11. SB THRU B CD	3	N/A	N/A	N/A	N/A

THE ABOVE VALUES ARE CALCULATED OF COMBINED LOOP AND LEAD-IN INDUCTANCES AND RESISTANCES. ACTUAL MEASURED VALUES SHOULD BE WITHIN +/- 20% OF THESE VALUES.

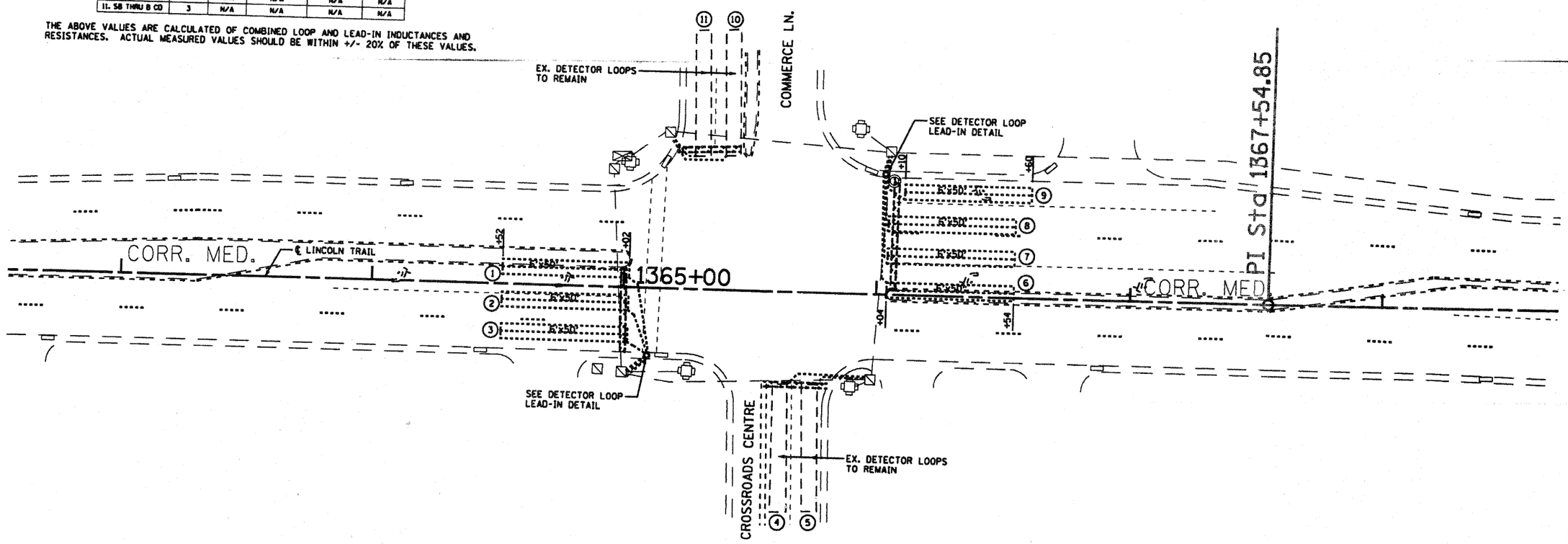

LEGEND

- EX. DETECTOR LOOP TO REMAIN
- EX. VISIBLE DETECTOR LOOP TO BE REPLACED
- BURIED DETECTOR LOOP TO BE REPLACED IF REQUIRED
- EX. TRAFFIC CONTROLLER BOX
- EX. HANDHOLE
- EX. DOUBLE HANDHOLE
- EX. TRAFFIC SIGNAL BASE
- EX. TRAFFIC CONTROLLER CONDUIT

SCHEDULE OF QUANTITIES		
ITEM	UNIT	TOTAL QUANTITIES
LOCATING UNDERGROUND CABLE	FOOT	35
DETECTOR LOOP REPLACEMENT	FOOT	1,312

NOTE: NEW DETECTOR LOOPS SHALL BE CENTERED WITHIN THE LANES SHOWN ON THE PROPOSED STRIPING PLANS.

20 0 20 40
SCALE IN FEET

FILE NAME = $FILEL$

Johnson, Depp & Quisenberry
CONSULTING ENGINEERS
Springfield, Illinois

USER NAME = $USER$
PLOT SCALE = $SCALE$
PLOT DATE = $DATE$

DESIGNED - CMV
DRAWN - SJS
CHECKED - CMV
DATE - 10/21/2010

REVISED -
REVISED -
REVISED -
REVISED -

STATE OF ILLINOIS
DEPARTMENT OF TRANSPORTATION

DETECTOR LOOP REPLACEMENT
LINCOLN TRAIL & COMMERCE LN.

SCALE: | SHEET NO. OF SHEETS | STA. TO STA.

F.A.U. RTE.	SECTION	COUNTY	TOTAL SHEETS	SHEET NO.
9166	34-1RS-3	ST. CLAIR	87	81

CONTRACT NO. 76D96

ILLINOIS FED. AID PROJECT

DETECTOR LOOP REQUIREMENTS AND CALCULATIONS FOR LINCOLN TRAIL AND LANAGHAN DR.

LINCOLN TRAIL & LANAGHAN DR.					
LOOP	PHASE #	FT. X FT.	CALCULATED INDUCTANCE MICROHENRIES (µH)	CALCULATED RESISTANCE OHMS (Ω)	REQUIRED # OF TURNS
1. EB 1A CCO	6	6 X 6	368.4	2.9	3-6-3
2. EB 1B CCO	6	6 X 6	364.4	2.9	3-6-3
3. EB 2A CCO	6	6 X 6	368.0	2.9	3-6-3
4. EB 2B CCO	6	6 X 6	364.4	2.9	3-6-3
5. WB 1A CCO	8	6 X 6	841.9	2.9	3-6-3
6. WB 1B CCO	8	6 X 6	841.9	2.9	3-6-3
7. WB 2A CCO	8	6 X 6	841.9	2.9	3-6-3
8. WB 2B CCO	8	6 X 6	841.9	2.9	3-6-3

THE ABOVE VALUES ARE CALCULATED OF COMBINED LOOP AND LEAD-IN INDUCTANCES AND RESISTANCES. ACTUAL MEASURED VALUES SHOULD BE WITHIN +/- 20% OF THESE VALUES.

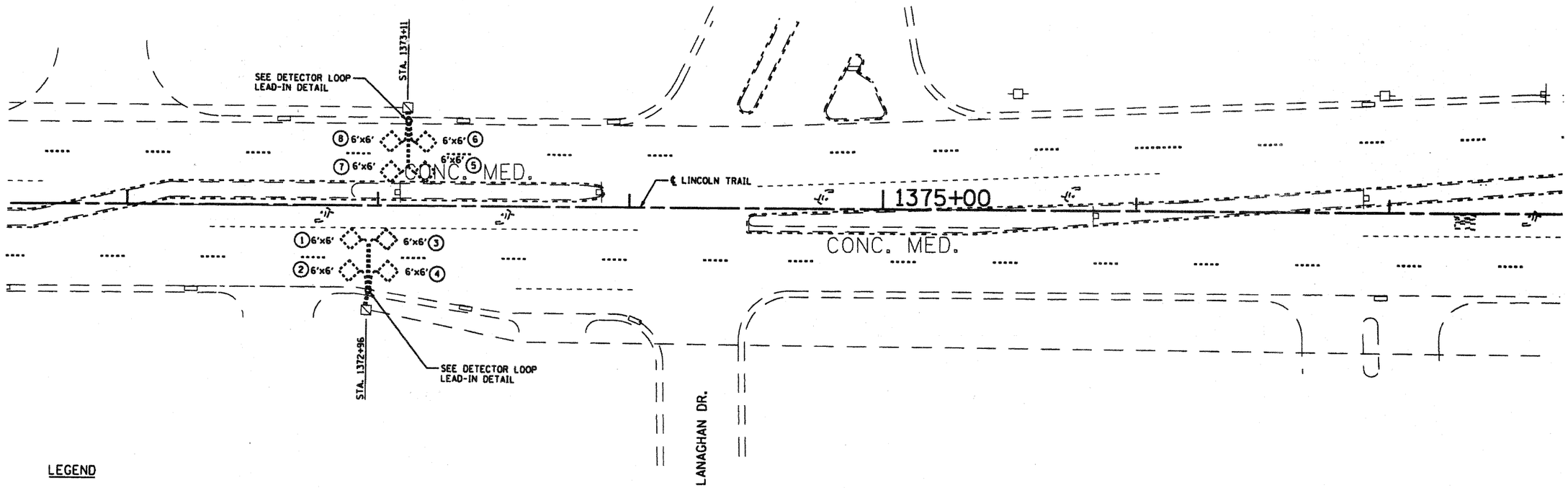

LEGEND

- EX. DETECTOR LOOP TO REMAIN
- EX. VISIBLE DETECTOR LOOP TO BE REPLACED
- BURIED DETECTOR LOOP TO BE REPLACED IF REQUIRED
- EX. TRAFFIC CONTROLLER BOX
- EX. HANDHOLE
- EX. DOUBLE HANDHOLE
- EX. TRAFFIC SIGNAL BASE
- EX. TRAFFIC CONTROLLER CONDUIT

SCHEDULE OF QUANTITIES		TOTAL QUANTITIES
ITEM	UNIT	
LOCATING UNDERGROUND CABLE	FOOT	40
DETECTOR LOOP REPLACEMENT	FOOT	312

NOTE: NEW DETECTOR LOOPS SHALL BE CENTERED WITHIN THE LANES SHOWN ON THE PROPOSED STRIPING PLANS.

20 0 20 40
SCALE IN FEET

FILE NAME = #FILEL#	USER NAME = #USER#	DESIGNED - CMV	REVISED -
Johnson, Depp & Quisenberry CONSULTING ENGINEERS Springfield, Illinois		DRAWN - SJS	REVISED -
	PLOT SCALE = #SCALE#	CHECKED - CMV	REVISED -
	PLOT DATE = #DATE#	DATE - 10/21/2010	REVISED -

STATE OF ILLINOIS
DEPARTMENT OF TRANSPORTATION

DETECTOR LOOP REPLACEMENT
LINCOLN TRAIL & LANAGHAN DR.

SCALE: | SHEET NO. OF SHEETS | STA. TO STA.

F.A.U. RTE.	SECTION	COUNTY	TOTAL SHEETS	SHEET NO.
9166	34-1RS-3	ST. CLAIR	87	82

CONTRACT NO. 70D96

ILLINOIS FED. AID PROJECT

DETECTOR LOOP REQUIREMENTS AND CALCULATIONS FOR LINCOLN TRAIL AND IL RTE 159

LINCOLN TRAIL & N ILLINOIS ST. (IL 159)					
LOOP	PHASE #	FT. X FT.	CALCULATED INDUCTANCE MICROHENRIES (μH)	CALCULATED RESISTANCE OHMS (Ω)	REQUIRED # OF TURNS
1. EB LT A CD	3	6 X 500	368.4	2.9	3-6-3
2. EB LT B CD	3	6 X 500	364.4	2.9	3-6-3
3. EB THRU A CD	8	6 X 500	368.0	2.9	3-6-3
4. EB THRU B CD	8	6 X 500	364.4	2.9	3-6-3
5. EB RT CD	8	N/A	364.4	2.9	0
6. WB LT CD	1	N/A	364.4	2.9	0
7. WB THRU A CD	6	N/A	364.4	2.9	0
8. WB THRU B CD	6	N/A	364.4	2.9	0
9. WB RT CD	6	N/A	364.4	2.9	0
10. EB A CCD	8	6 X 6	364.4	2.9	6
11. EB B CCD	8	6 X 6	841.9	2.9	6
12. WB LT A CD	7	6 X 500	841.9	2.9	3-6-3
13. WB LT B CD	7	6 X 500	816.4	2.3	3-6-3
14. WB THRU A CD	4	6 X 500	795.7	1.8	3-6-3
15. WB THRU B CD	4	6 X 500	371.7	3.0	3-6-3
16. WB RT CD	4	N/A	367.7	2.9	0
17. SB LT CD	5	N/A	367.7	2.9	0
18. SB THRU A CD	2	N/A	367.7	2.9	0
19. SB THRU B CD	2	N/A	367.7	2.9	0
20. SB RT CD	2	N/A	367.7	2.9	0

THE ABOVE VALUES ARE CALCULATED OF COMBINED LOOP AND LEAD-IN INDUCTANCES AND RESISTANCES. ACTUAL MEASURED VALUES SHOULD BE WITHIN +/- 20% OF THESE VALUES.

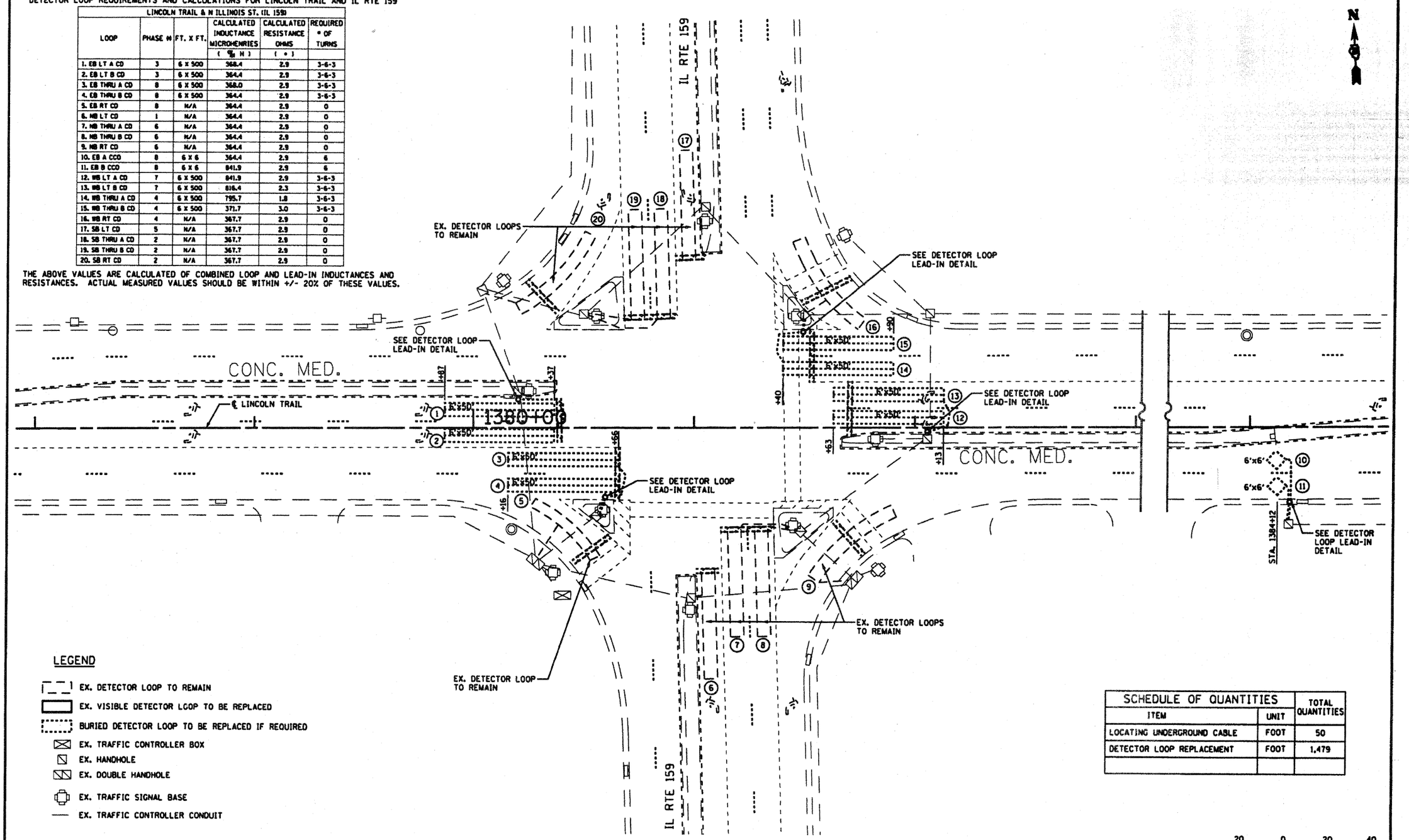

LEGEND

- EX. DETECTOR LOOP TO REMAIN
- EX. VISIBLE DETECTOR LOOP TO BE REPLACED
- BURIED DETECTOR LOOP TO BE REPLACED IF REQUIRED
- EX. TRAFFIC CONTROLLER BOX
- EX. HANDHOLE
- EX. DOUBLE HANDHOLE
- EX. TRAFFIC SIGNAL BASE
- EX. TRAFFIC CONTROLLER CONDUIT

SCHEDULE OF QUANTITIES		
ITEM	UNIT	TOTAL QUANTITIES
LOCATING UNDERGROUND CABLE	FOOT	50
DETECTOR LOOP REPLACEMENT	FOOT	1,479

20 0 20 40
SCALE IN FEET

FILE NAME = $FILE$	USER NAME = $USER$	DESIGNED - CMV	REVISED -
Johnson, Depp & Quisenberry CONSULTING ENGINEERS Springfield, Illinois		DRAWN - SJS	REVISED -
	PLOT SCALE = $SCALE$	CHECKED - CMV	REVISED -
	PLOT DATE = $DATE$	DATE - 10/21/2010	REVISED -

STATE OF ILLINOIS
DEPARTMENT OF TRANSPORTATION

DETECTOR LOOP REPLACEMENT
LINCOLN TRAIL & N. ILLINOIS ST. (IL 159)

SCALE: | SHEET NO. OF SHEETS | STA. TO STA.

F.A.U. RTE.	SECTION	COUNTY	TOTAL SHEETS	SHEET NO.
9166	34-1RS-3	ST. CLAIR	87	83

CONTRACT NO. 76D98
ILLINOIS FED. AID PROJECT

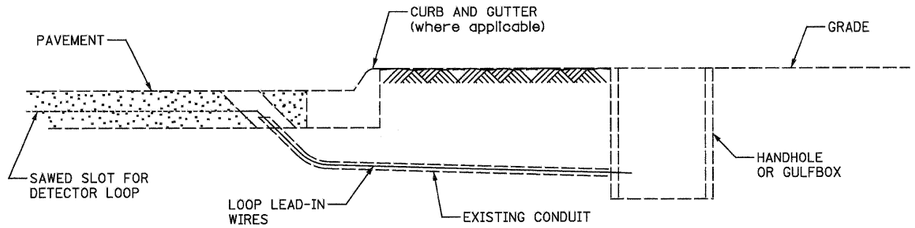

NO SCALE

DETECTOR LOOP LEAD-IN

(REUSE EXISTING CONDUIT)

1. DRILL OUT PAVEMENT SEALANT AND CLEAN EXISTING CONDUIT.
2. REMOVE EXISTING DETECTOR LOOP WIRES TO HANDHOLE OR GULFBOX.
3. INSTALL NEW LOOP LEAD-IN WIRES IN EXISTING CONDUIT.
4. SPLICE NEW DETECTOR LOOP WIRES TO EXISTING LOOP LEAD-IN CABLE IN HANDHOLE OR GULFBOX.
5. FILL HOLE WITH APPROVED SEALER. PREVENT SEALER FROM ENTERING INTO CONDUIT.
6. LOCATING UNDERGROUND CABLE WILL BE PAID FOR SEPARATELY.

THE COST OF THIS WORK SHALL BE INCLUDED IN THE PAY ITEM "DETECTOR LOOP REPLACEMENT.

SEE TABLE "DETECTOR LOOP REQUIREMENTS AND CALCULATIONS"
FOR LOOP SIZE AND CALCULATED NUMBER OF TURNS.

ELECTRICAL GENERAL NOTES

1. DETECTOR LOOPS SHALL BE PLACED IN THE PAVEMENT AFTER MILLING AND PRIOR TO RESURFACING.
2. THE LOCATION OF ALL DETECTOR LOOPS SHALL BE APPROVED BY THE ENGINEER BEFORE ANY SLOTS ARE SAWED IN THE PAVEMENT.
3. DETECTOR LOOP LEAD-IN SPLICES SHALL BE MADE ACCORDING TO HIGHWAY STANDARD 886001. CONDUCTORS SHALL BE SPLICED IN A RIGID MOLD. ROSIN-CORE SOLDER SHALL BE USED. THE COST OF LABOR AND MATERIAL FOR REMOVING EXISTING DETECTOR LOOP CABLES FROM THE CONDUIT AND SPLICING INTO THE EXISTING LEAD-IN CABLES SHALL BE INCLUDED IN THE PAY ITEM "DETECTOR LOOP REPLACEMENT."

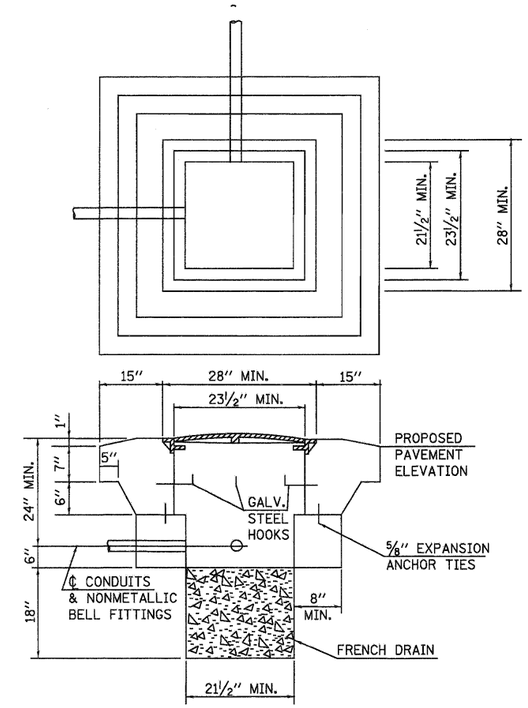

REBUILD EXISTING HANDHOLE TO HEAVY DUTY-HANDHOLE DETAIL

1. USE ⅝" Ø EXPANSION ANCHOR TIES AT 6" CENTERS, 20 TOTAL. COST OF MATERIAL AND LABOR SHALL BE INCLUDED WITH "REBUILD EXISTING HANDHOLE TO HEAVY-DUTY HANDHOLE."
2. CANNOT EXCAVATE BELOW TOP OF EXISTING CONDUIT UNLESS OTHERWISE SPECIFIED TO BE REMOVED.
3. THE CONTRACTOR SHALL BE RESPONSIBLE FOR ANY DAMAGE THAT MAY OCCUR TO EXISTING CABLES.
4. THE MINIMUM WEIGHT OF THE FRAME AND COVER SHALL BE 260 LBS.
5. THIS DETAIL IS TO BE USED IN CONJUNCTION WITH STANDARD 814001, GENERAL NOTES AND THE SPECIAL PROVISION REBUILD EXISTING HANDHOLE TO HEAVY DUTY HANDHOLE.

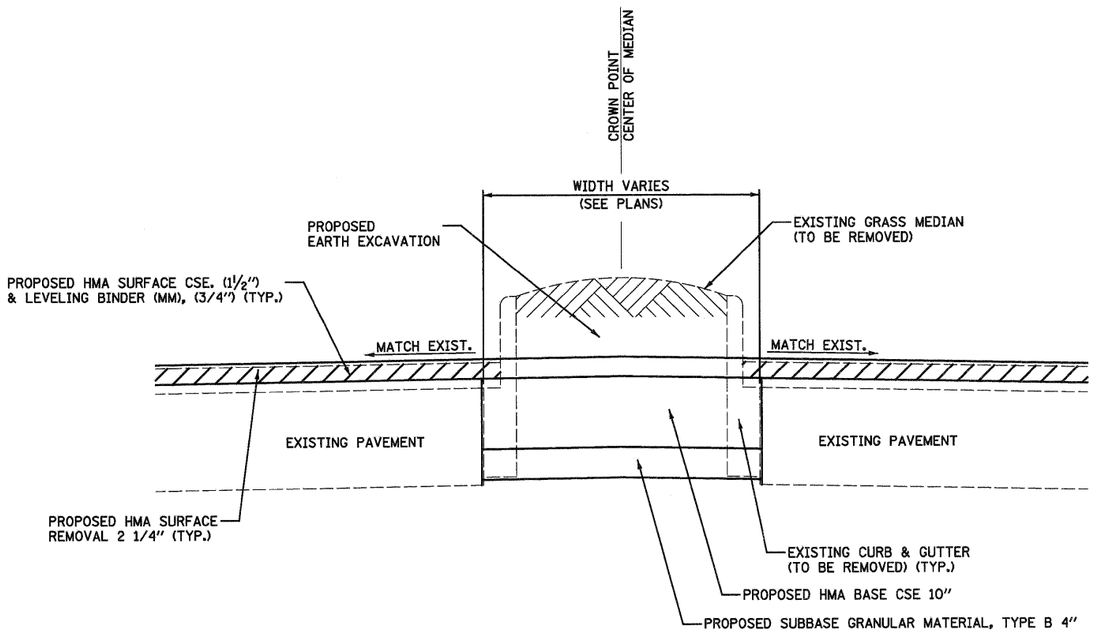

DETAIL FOR REMOVAL OF EXISTING GRASS MEDIANS
AND PROPOSED PAVEMENT STRUCTURE

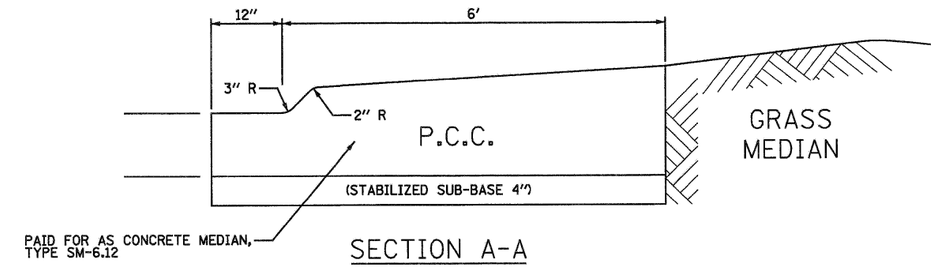

SECTION A-A

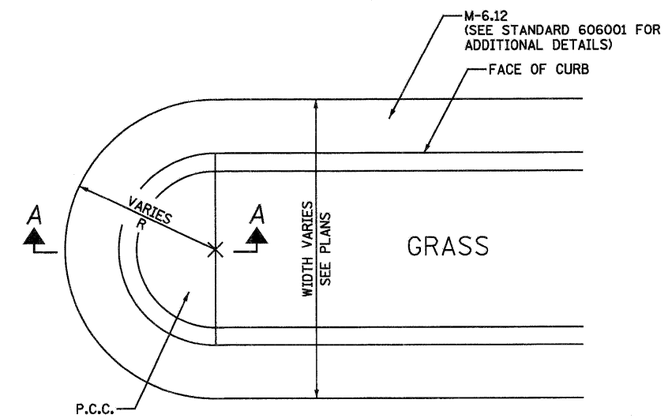

PLAN

DETAIL FOR RAMPED GRASS MEDIAN NOSE

FILE NAME = ...\cadd\D876D96-sht-details.dgn	USER NAME = SJS	DESIGNED -	REVISED -	STATE OF ILLINOIS DEPARTMENT OF TRANSPORTATION	MISCELLANEOUS DETAILS	F.A.U. RTE.	SECTION	COUNTY	TOTAL SHEETS	SHEET NO.
Johnson, Depp & Quisenberry CONSULTING ENGINEERS Springfield, Illinois		DRAWN -	REVISED -			9166	34-1RS-3	ST. CLAIR	87	85
	PLOT SCALE = 50.0000 ' / IN.	CHECKED -	REVISED -					CONTRACT NO. 76D96		
	PLOT DATE = 12/15/2010 09:40:57	DATE -	REVISED -		SCALE: SHEET NO. OF SHEETS STA. TO STA.		ILLINOIS	FED. AID PROJECT		

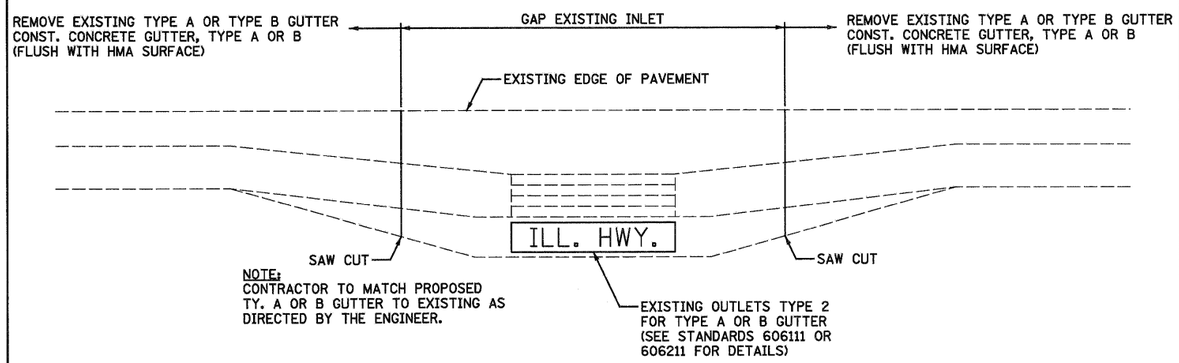

DETAIL FOR GAPPING EXISTING GUTTER OUTLETS

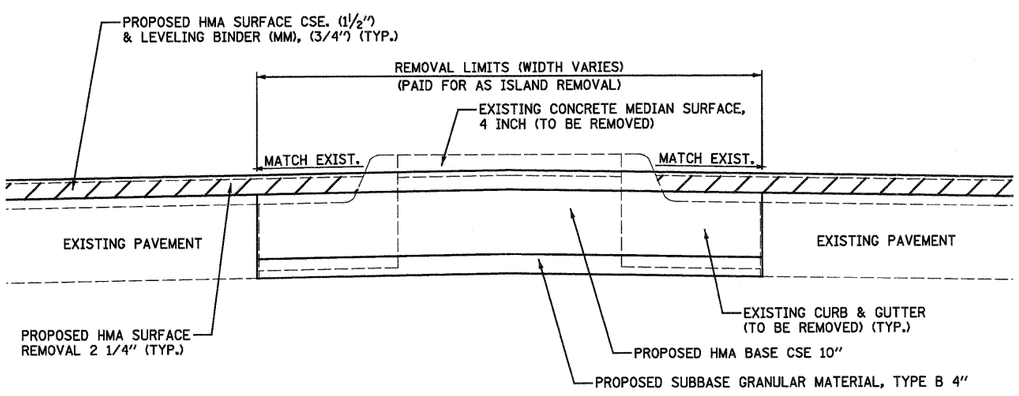

DETAIL FOR ISLAND REMOVAL

FILE NAME = ...\cadd\D876D96-sht-details.dgn	USER NAME = SJS	DESIGNED -	REVISED -	STATE OF ILLINOIS DEPARTMENT OF TRANSPORTATION	MISCELLANEOUS DETAILS	F.A.U. RTE.	SECTION	COUNTY	TOTAL SHEETS	SHEET NO.
Johnson, Depp & Quisenberry CONSULTING ENGINEERS Springfield, Illinois		DRAWN -	REVISED -			9166	34-1RS-3	ST. CLAIR	87	86
	PLOT SCALE = 50.0000 ' / IN.	CHECKED -	REVISED -					CONTRACT NO. 76D96		
	PLOT DATE = 12/15/2010 09:40:57	DATE -	REVISED -		SCALE: SHEET NO. OF SHEETS STA. TO STA.		ILLINOIS FED. AID PROJECT			

MEDIAN CROSS-OVER DETAIL

STA. 1083+00 TO STA. 1110+00

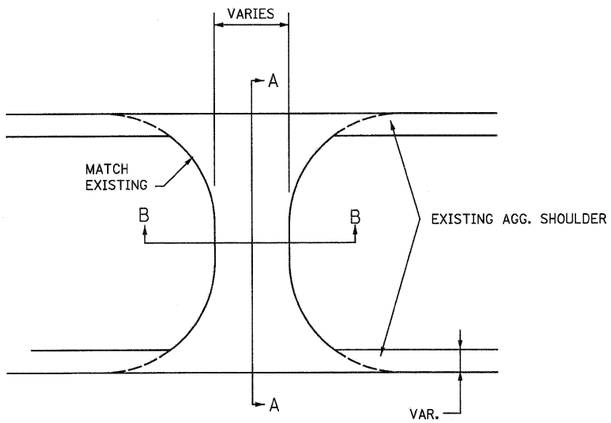

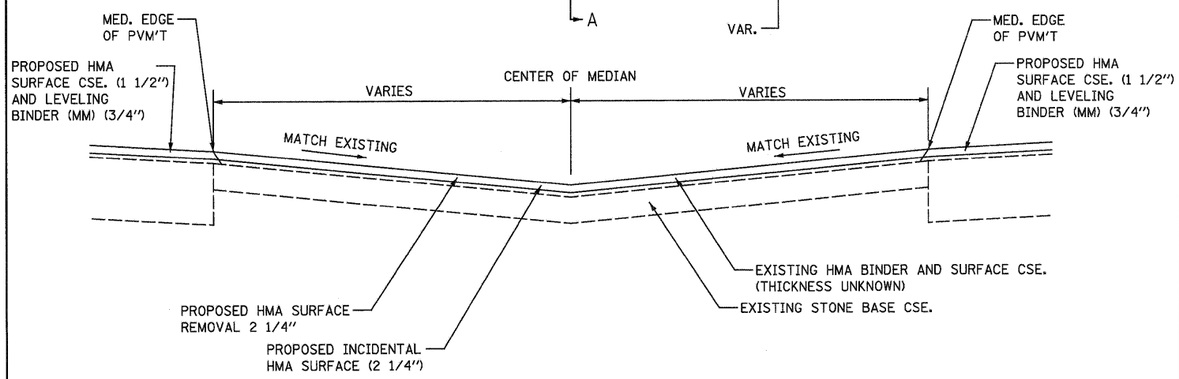

SECTION A-A

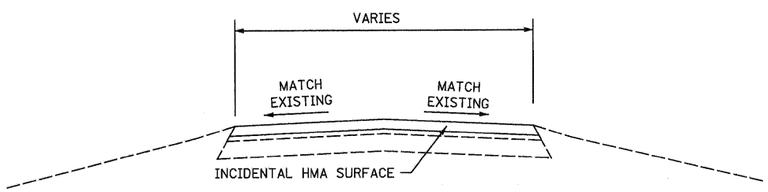

SECTION B-B

LOCATIONS:
STA. 1083+75
STA. 1085+50
STA. 1087+65
STA. 1090+90
STA. 1098+90
STA. 1109+40

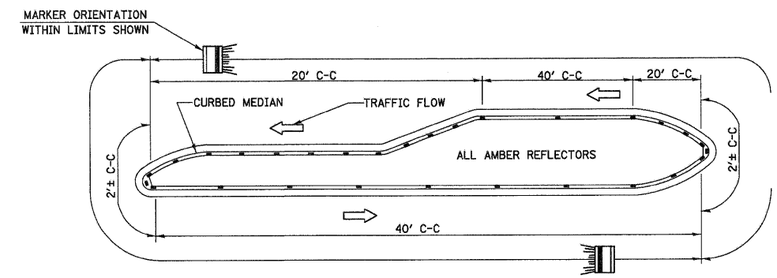

NOTE:
1. PRISMATIC REFLECTORS SHALL BE MONO-DIRECTIONAL AND POSITIONED SO THAT THE REFLECTIVE FACE IS FACING THE APPROACHING TRAFFIC.
2. PRISMATIC REFLECTORS SHALL BE SECURED IN PLACE WITH AN EPOXY ADHESIVE.
3. PRISMATIC REFLECTORS SHALL BE EITHER AMBER OR CRYSTAL IN COLOR.

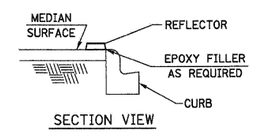

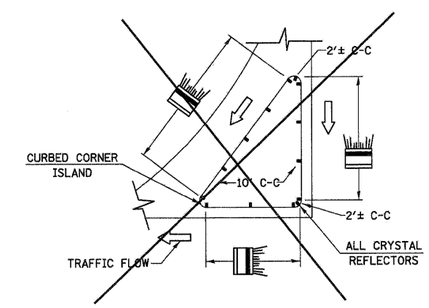

TYPICAL PLACEMENT OF PRISMATIC REFLECTORS ON CURBS

(NO SCALE)

FILE NAME = ...\cadd\D876D96-sht-details.dgn	USER NAME = SJS	DESIGNED -	REVISED -	STATE OF ILLINOIS DEPARTMENT OF TRANSPORTATION	MISCELLANEOUS DETAILS	F.A.U. RTE.	SECTION	COUNTY	TOTAL SHEETS / SHEET NO.
Johnson, Depp & Quisenberry CONSULTING ENGINEERS Springfield, Illinois		DRAWN -	REVISED -			9166	34-1RS-3	ST. CLAIR	87 / 87
	PLOT SCALE = 50.0000 ' / IN.	CHECKED -	REVISED -					CONTRACT NO. 76D96	
	PLOT DATE = 12/15/2010 09:40:57	DATE -	REVISED -		SCALE: SHEET NO. OF SHEETS STA. TO STA.		ILLINOIS	FED. AID PROJECT	

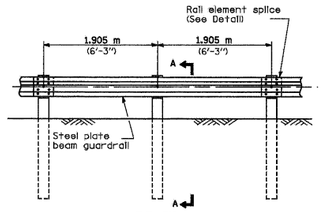

ELEVATION

TYPE A

1.905 m (6'-3") Typical post spacing

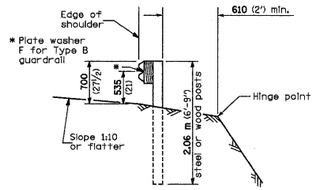

SECTION A-A

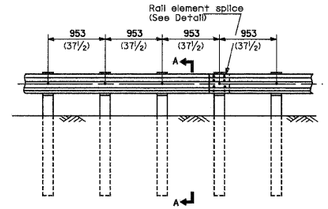

ELEVATION

TYPE B

953 (37½) Closed post spacing

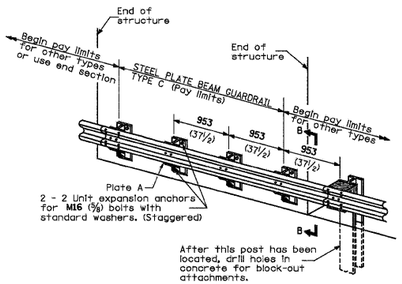

TYPE C

953 (37½) Block-out spacing

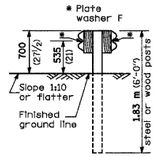

SECTION C-C

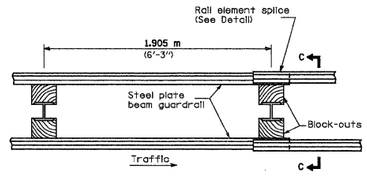

PLAN

TYPE D

Double steel plate beam guardrail
1.905 m (6'-3") typical post spacing

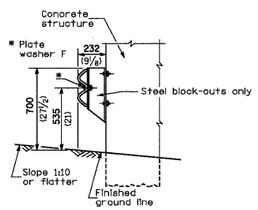

SECTION B-B

GENERAL NOTES

All slope ratios are expressed as units of vertical displacement to units of horizontal displacement (V:H).

All dimensions are in millimeters (inches) unless otherwise shown.

DATE	REVISIONS

STEEL PLATE BEAM GUARDRAIL
(Sheet 1 of 4)

STANDARD 630001-04

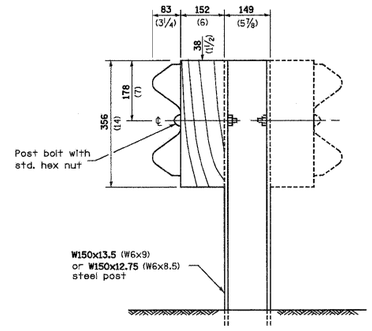

STEEL POST CONSTRUCTION

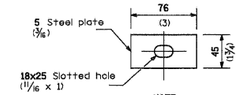

NOTE

Plate washer F shall be used on type A guardrail only where specified. Plate washer F shall be used at all other locations where rail element is bolted to a block-out unless otherwise noted.

PLATE WASHER F

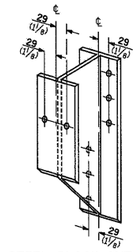

STEEL BLOCK-OUT DETAIL

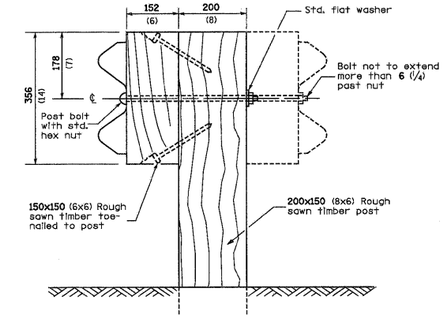

WOOD POST CONSTRUCTION

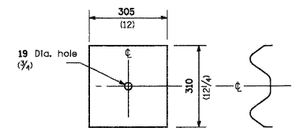

NOTE

Plate A shall be placed between rail element and block-out at non-splice mounting points only when steel block-outs are used.

PLATE A

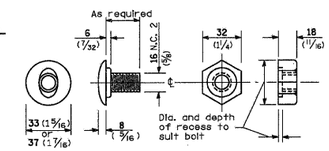

POST OR SPLICE BOLT & NUT

STEEL PLATE BEAM GUARDRAIL
(Sheet 2 of 4)

STANDARD 630001-04

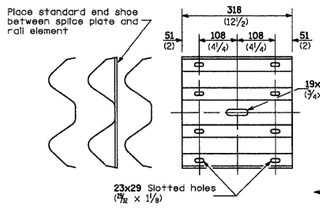

SPLICE PLATE

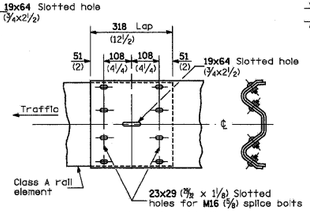

RAIL ELEMENT SPLICE

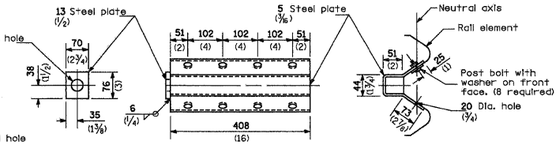

NOTE

Anchor plate T shall be used to attach cable assembly to guardrail when required on traffic barrier terminals.

ANCHOR PLATE T DETAILS

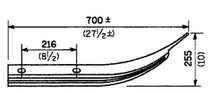

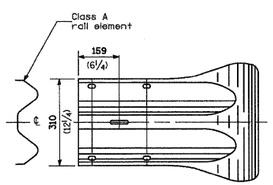

END SECTION

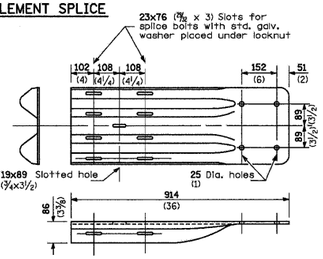

NOTE

When end shoe is attached to a bridge parapet which has an expansion joint, the bolts shall be provided with a locknut or double nut and shall be tightened only to a point that will allow guardrail movement.

The standard end shoe shall be attached to the concrete with pre-drilled or self-drilling anchor bolts. The anchor cone shall be set flush with the surface of the concrete.

Externally threaded studs protruding from the surface of the concrete will not be permitted.

END SHOE

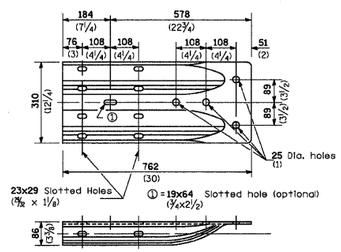

ALTERNATE END SHOE

STEEL PLATE BEAM GUARDRAIL
(Sheet 3 of 4)

STANDARD 630001-04

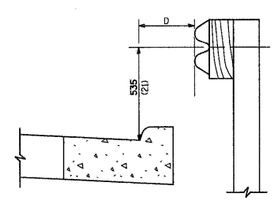

NOTE

If it is necessary for D to be more than **300** (12) and less than **3.0 m** (10'-0") type **M-5** (M-2) curb and gutter (Std. 606001) shall be used in front of and in advance of the guardrail.

GUARDRAIL PLACED BEHIND CURB

(D = 0 desirable to **300** (12) maximum)

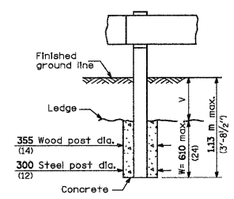

NOTE

When V is 0 to **520** (20½), W= **600** (24). When V is greater than **520** (20½), W= **1.13 m** (3'-8½") -V. When V is **150** (6) or less, post hole shall be filled to ground line with concrete.

Ledge line is top of rock ledge or hard slag fill.

FOOTING FOR POST WHEN IMPERVIOUS MATERIAL IS ENCOUNTERED

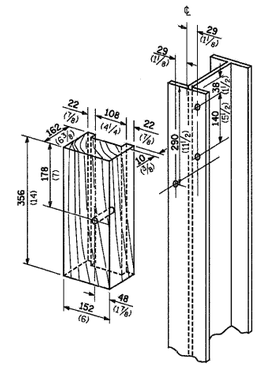

WOOD BLOCK-OUT AND STEEL POST DETAILS

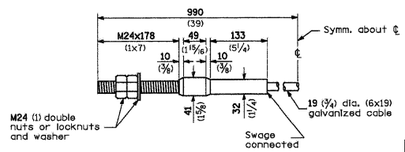

CABLE ASSEMBLY

(18,100 kg (40,000 lbs.) min. breaking strength)
Tighten to taut tension.

STEEL PLATE BEAM GUARDRAIL
(Sheet 4 of 4)

STANDARD 630001-04

FILE NAME = ...\cadd\D876D96-sht-details.dgn	USER NAME = JTH	DESIGNED -	REVISED -
Johnson, Depp & Quisenberry CONSULTING ENGINEERS Springfield, Illinois		DRAWN -	REVISED -
	PLOT SCALE = 50.0000 ' / IN.	CHECKED -	REVISED -
	PLOT DATE = 01/13/2011 13:18:20	DATE -	REVISED -

STATE OF ILLINOIS
DEPARTMENT OF TRANSPORTATION

EXISTING GUARDRAIL DETAILS

SCALE: | SHEET NO. OF SHEETS | STA. TO STA.

F.A.U. RTE.	SECTION	COUNTY	TOTAL SHEETS	SHEET NO.
9166	34-1RS-3	ST. CLAIR	87	87A
		CONTRACT NO. 76D96		
		ILLINOIS FED. AID PROJECT		