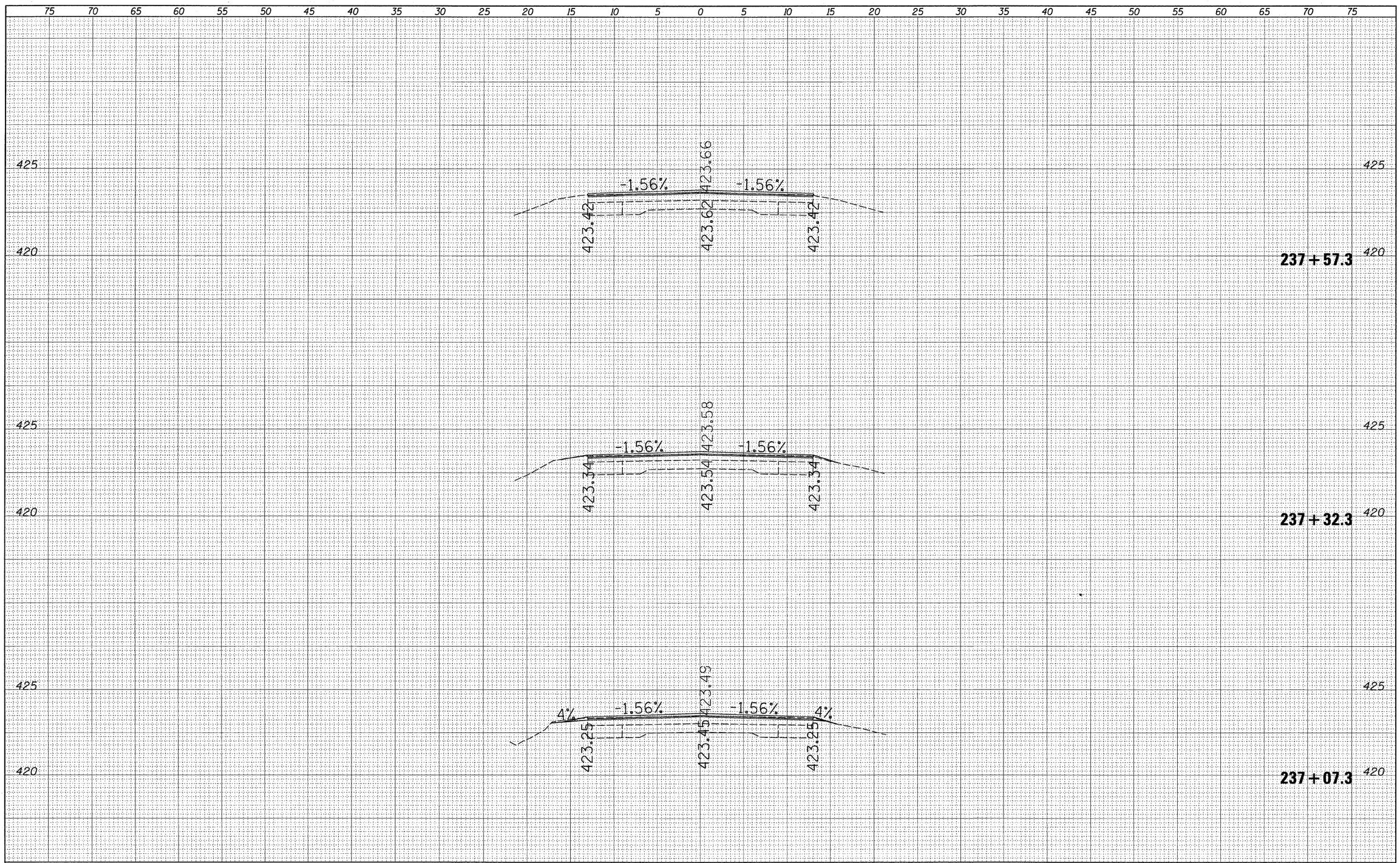

FINAL SURVEY	BY	DATE
SURVEYED		
PLOTTED		
TOPOGRAPHY		
AREAS		
AREAS CHECKED		
NOTE BOOK NO.		

ORIGINAL SURVEY	BY	DATE
SURVEYED		
PLOTTED		
TOPOGRAPHY		
AREAS		
AREAS CHECKED		
NOTE BOOK NO.		

FILE NAME = c:\pw_work\pwidot\swartzrw\d0177918\D774448-sht-xsoml.dgn	USER NAME = swartzrw	DESIGNED -	REVISED -
		DRAWN -	REVISED -
	PLOT SCALE = 5.0000 ' / IN.	CHECKED -	REVISED -
	PLOT DATE = 12/27/2010	DATE -	REVISED -

STATE OF ILLINOIS
DEPARTMENT OF TRANSPORTATION

MAINLINE CROSS SECTIONS
U.S. 45

SCALE: 5 | SHEET NO. 22 OF 28 SHEETS | STA. 237+07.3 TO STA. 237+57.3

F.A.P. RTE.	SECTION	COUNTY	TOTAL SHEETS	SHEET NO.
328	104 RS-4	Wayne	77	71

CONTRACT NO. 74448

ILLINOIS FED. AID PROJECT