STATE OF ILLINOIS
DEPARTMENT OF TRANSPORTATION

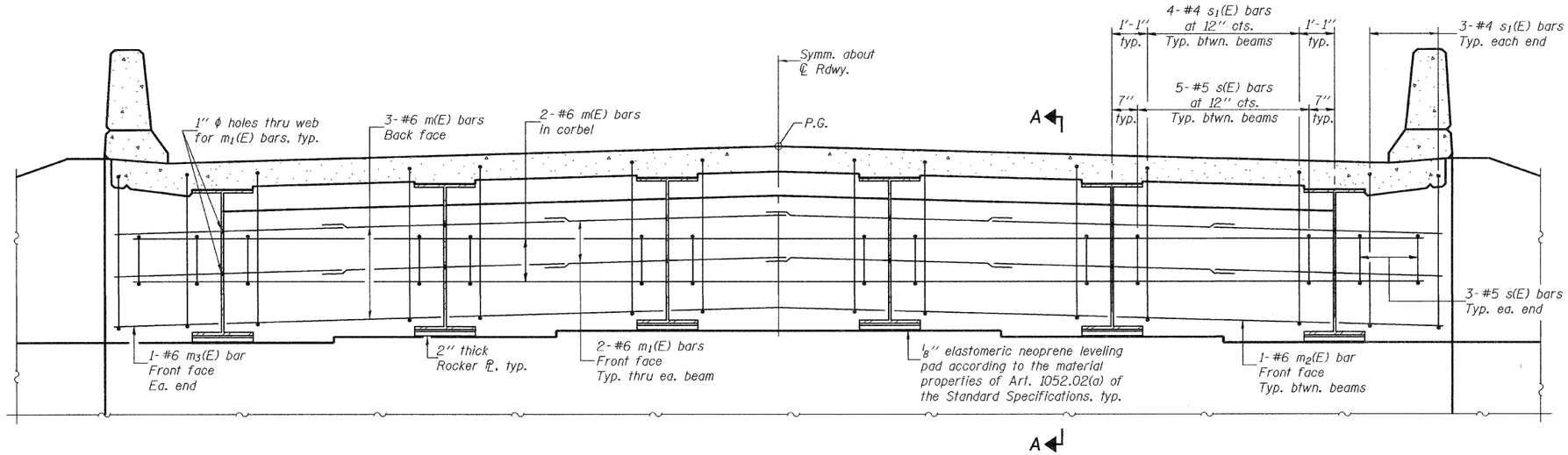

DIAPHRAGM ELEVATION AT WEST ABUTMENT

(Looking West - East Abutment similar)

Notes: Reinforcement bars in diaphragm are billed with superstructure on sheet 9 of 22.
Concrete in diaphragm is included with Concrete Superstructure on sheet 9 of 22.
For details of bars s(E) & s1(E) see sheet 9 of 22.
The s(E) and s1(E) bars shall be placed parallel to the beams.
For bar splicer details see sheet 19 of 22.

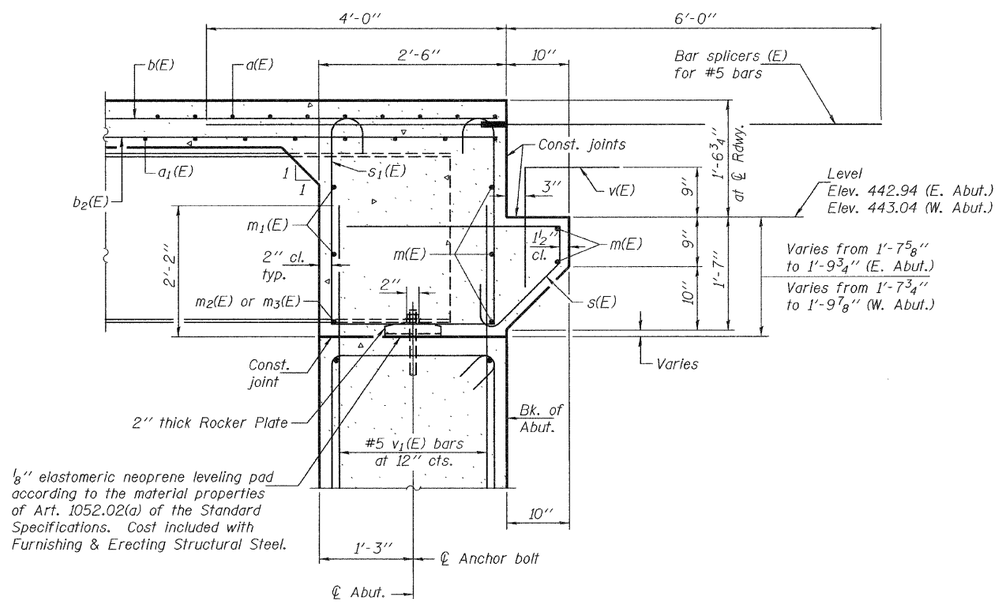

SECTION A-A

MIN. BAR LAP

#6 bar = 2'-7"

DESIGNED	Phillip R. Litchfield
CHECKED	Ray Ahanchi
DRAWN	Gregory D. Farmer htd
CHECKED	PRL/GRA/JDE

Sep. 9, 2010
EXAMINED Thomas J. Domagalski
ENGINEER OF BRIDGE DESIGN
PASSED Ralph E. Anderson
ENGINEER OF BRIDGES AND STRUCTURES

SUPERSTRUCTURE
STRUCTURE NO. 013-0040

SHEET NO. 10 22 SHEETS	S.B.I. RTE.	SECTION	COUNTY	TOTAL SHEETS	SHEET NO.
	12	10B-1	CLAY	39	22
			CONTRACT NO. 74004		
	FED. ROAD DIST. NO. _	ILLINOIS	FED. AID PROJECT		

0130040-74004.dgn 09/09/2010 11:12:44 AM