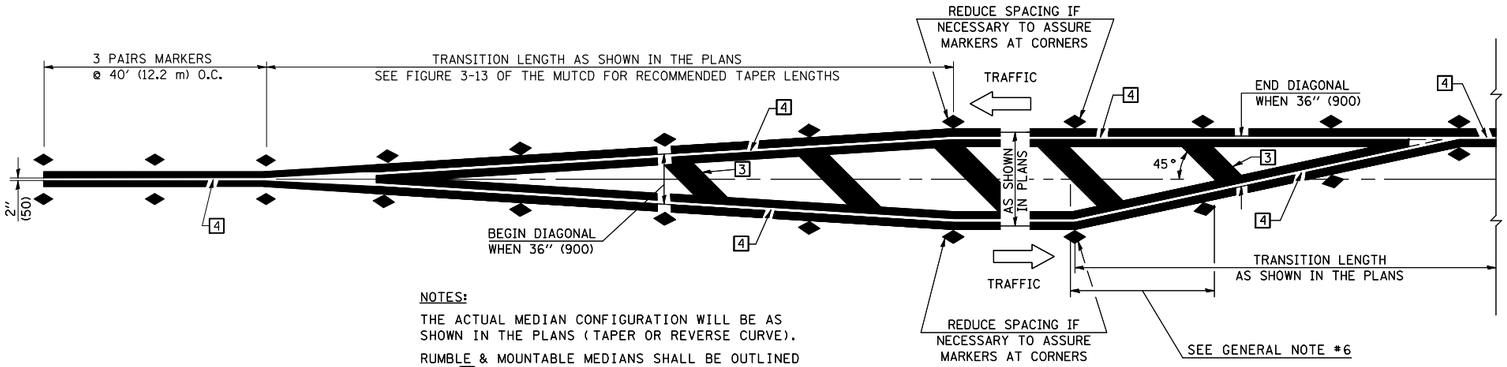


NOTES:

THE ACTUAL MEDIAN CONFIGURATION WILL BE AS SHOWN IN THE PLANS (TAPER OR REVERSE CURVE).

RUMBLE & MOUNTABLE MEDIANS SHALL BE OUTLINED WITH 2.

## TYPICAL MEDIAN TRANSITIONS

## GENERAL NOTES

1. WHEN MEDIANS ARE PRESENT, PAVEMENT MARKINGS ARE TO BE PLACED ADJACENT TO MEDIANS.
2. SOME OF THE INFORMATION INCLUDED WITH THIS DETAIL MAY NOT BE APPLICABLE TO THIS IMPROVEMENT.
3. PAVEMENT MARKINGS ARE TO BE EXTENDED THROUGH OMISSIONS WHEN APPLICABLE.
4. A STRIPING KEY IS AVAILABLE ELSEWHERE AND SHALL BE SHOWN WHERE THE QUANTITIES ARE LISTED.
5. FINAL PAVEMENT MARKINGS SHALL BE IN PLACE PRIOR TO PLACING ANY RAISED REFLECTIVE PAVEMENT MARKERS.
6. THE FOLLOWING CRITERIA SHALL BE USED FOR SELECTING THE DIAGONAL PAVEMENT MARKING SPACING,
   <30 MPH USE 15' (<50 km/h USE 4.5 m)
   30-45 MPH USE 20' (50-75 km/h USE 6.0 m)
   >45 MPH USE 30' (>75 km/h USE 9.0 m)

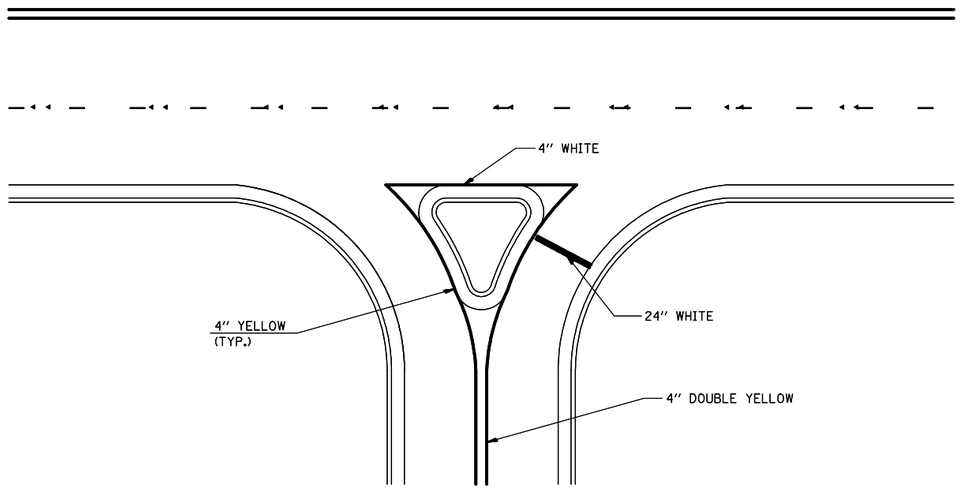


## RIGHT IN - RIGHT OUT ACCESS

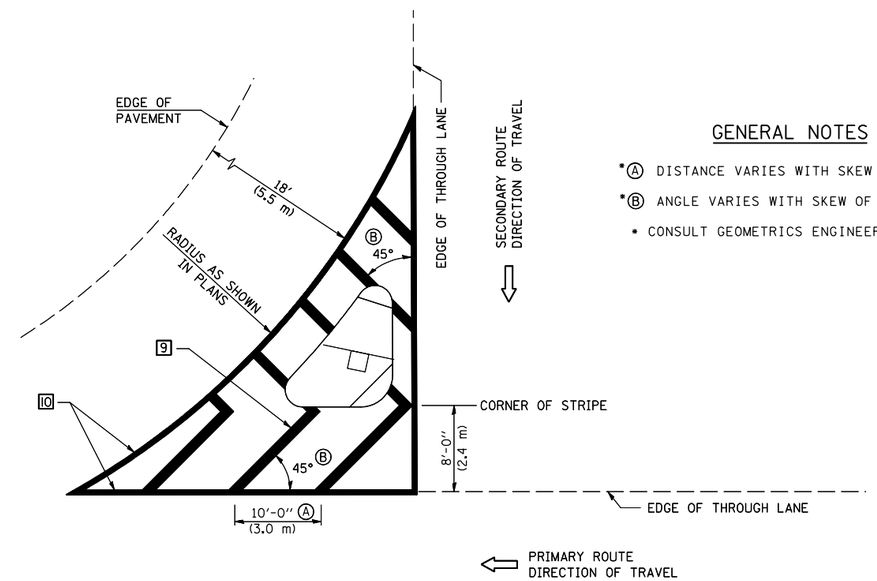


## GENERAL NOTES

*A DISTANCE VARIES WITH SKEW OF INTERSECTION.

*B ANGLE VARIES WITH SKEW OF INTERSECTION.

* CONSULT GEOMETRICS ENGINEER

## ISLAND

Note: All dimensions are in INCHES (millimeters) unless otherwise shown.

**DISTRICT 5 DETAIL NO. 7800AAAA**

| | | | |
|---|---|---|---|
| FILE NAME = | USER NAME = bucklesjj | DESIGNED - | REVISED - 11/06 |
| ct\pw_work\pwidot\bucklesjj\d0210336\D570708-sht-details.dgn | | DRAWN - | REVISED - 09/2009 - KJT |
| | PLOT SCALE = 40.0000 ' / IN. | CHECKED - | REVISED - |
| | PLOT DATE = 12/16/2010 | DATE - | REVISED - |

**STATE OF ILLINOIS**
**DEPARTMENT OF TRANSPORTATION**

**PAVEMENT MARKING AND MARKERS**
**(RURAL & URBAN APPLICATIONS)**

SCALE: | SHEET NO. 3 OF 4 SHEETS | STA. TO STA.

| F.A.P. RTE. | SECTION | COUNTY | TOTAL SHEETS | SHEET NO. |
|---|---|---|---|---|
| 804 | (23,24,25)RS-5 | CHAMPAIGN | 61 | 59 |
| | | CONTRACT NO. 70708 | | |
| FED. ROAD DIST. NO. | ILLINOIS | FED. AID PROJECT | | |