Designer NOTEs:
1. Designer to modify this Special Detail sheet, as needed, for inclusion in plans.
2. Include Highway Standard 280001 "TEMPORARY EROSION CONTROL SYSTEM."

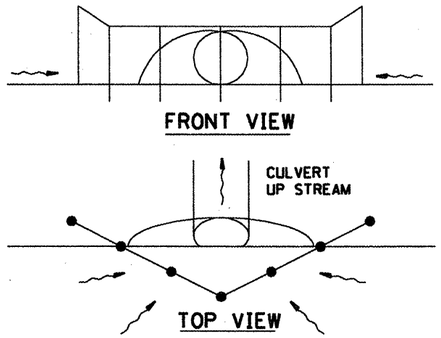

UPSTREAM PIPE CULVERT EROSION CONTROL

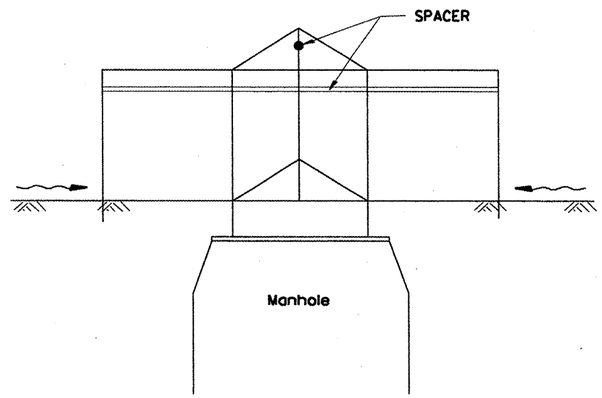

SIDE VIEW
A-A

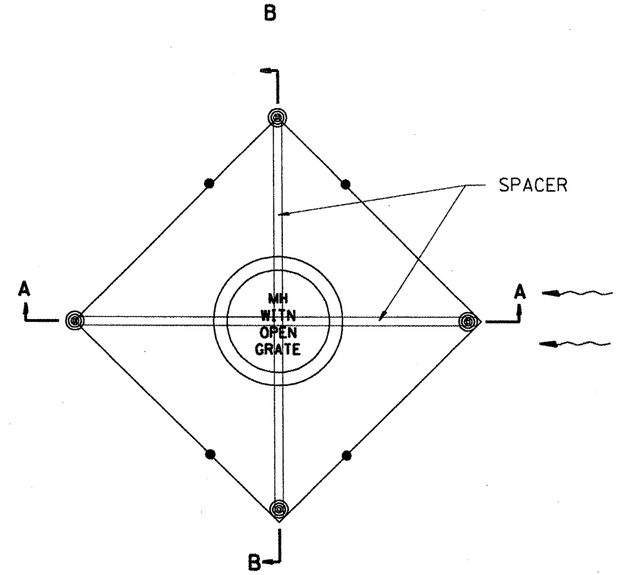

TOP VIEW

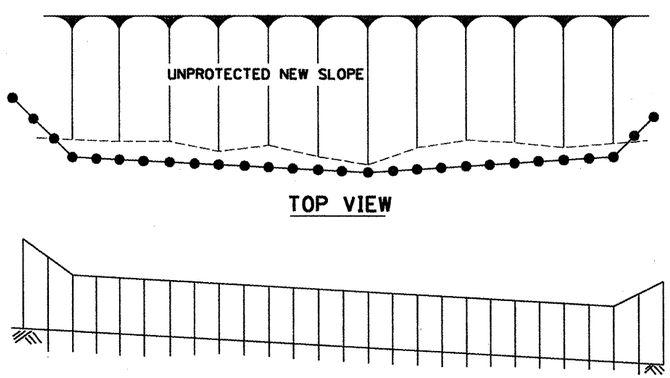

TOP VIEW

FRONT VIEW

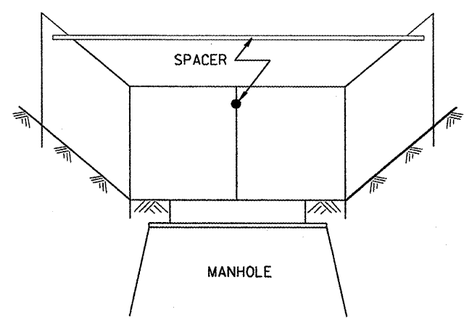

Front View
B-B

EROSION CONTROL
AT
OPEN GRATE MAN HOLE

GENERAL NOTES:

1. This work shall be performed in accordance with Sections 280 & 1081, of the Standard Specifications.
2. Additional Timber or Metal Post shall be installed, as needed.

All dimensions are in inches (millimeters) unless otherwise noted.

1-1-97		T.P.
3-11-03	ELIMINATED SILT FENCE DITCH CHECK	M.A.

STATE OF ILLINOIS
DEPARTMENT OF TRANSPORTATION

TYPICAL APPLICATION OF SILT FILTER FENCE

NOT TO SCALE

CADD STD. 280001-D4

F.A. RTE.	SECTION	COUNTY	TOTAL SHEETS	SHEET NO.
			103	57
		CONTRACT NO.		
FED. ROAD DIST. NO.	ILLINOIS	FED. AID PROJECT		