SECTION 24, TOWNSHIP 38, RANGE 12
SECTION 25, TOWNSHIP 38, RANGE 12

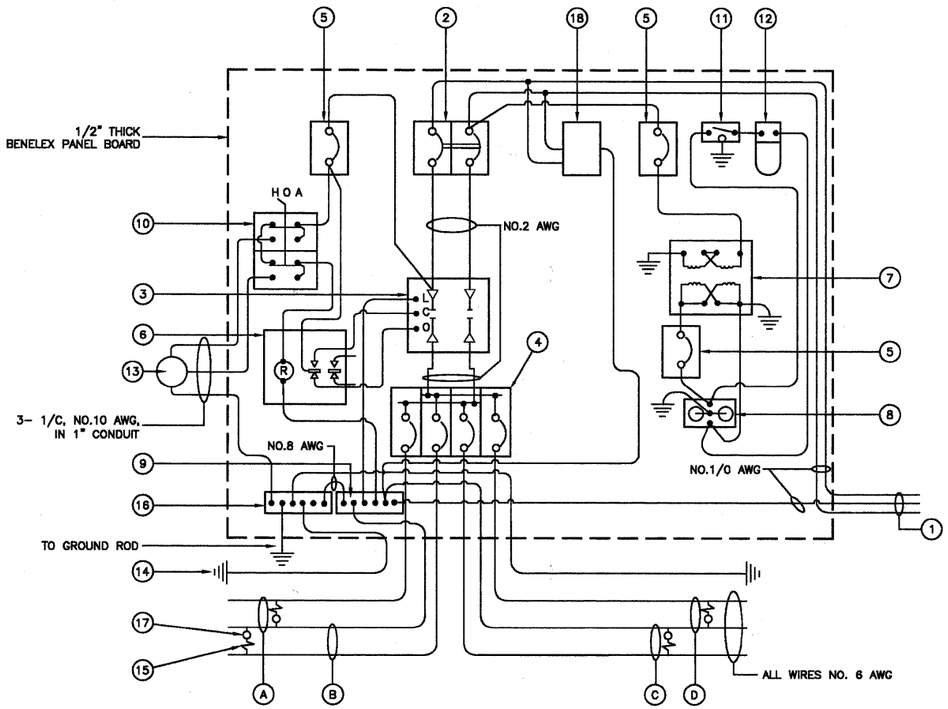

CONTROLLER WIRING DIAGRAM

(CONTROLLER #2)

CONTROLLER WIRING DIAGRAM LEGEND

1. 3-1/C, NO. 2, 600V SERVICE WIRE IN 2" DIA. GALVANIZED STEEL CONDUIT FOR 240/480 VOLT, 1#, 3 WIRE, 60HZ. SERVICE.
2. (1) 60 AMP MAIN CIRCUIT BREAKER, 2 POLE, 600 VOLT, 100 AMP BASE, NON-INTERCHANGEABLE TRIP INTERRUPTING RATING NEMA – 14000 AMP AT 480 V.
3. (1) 60 AMP REMOTE CONTROL CONTACTOR SWITCH, ELECTRICALLY OPERATED, MECHANICALLY HELD, 2 POLE, SINGLE THROW, MINIMUM 60 AMP, 600 VOLT
4. (4) 30 AMP CIRCUIT BREAKER, 1 POLE, 240 VOLT, 100 AMP BASE, NON-INTER-CHANGEABLE TRIP RATING NEMA – 14000 AMP AT 240 VOLTS.
5. (3) 20 AMP CONTROL CIRCUIT-CIRCUIT BREAKER, 1 POLE, 240 VOLT, 100 AMP BASE, NON-INTERCHANGEABLE TRIP INTERRUPTING RATING NEMA 14000 AMP AT 240 V.
6. (1) 20 AMP, 1 POLE DOUBLE THROW, 240 VOLT RELAY
7. (1) 1.5 KVA, SINGLE PHASE, ENCAPSULATED TRANSFORMER 240x480/120x240 VOLT, 60 HZ.
8. (1) 20 AMP, 120 VOLT DUPLEX GFCI RECEPTACLE.
9. NEUTRAL BUS BAR, 1/4"x1"x12" LONG MOUNTED ON PANEL WITH TAPS.
10. 3 POSITION SELECTOR SWITCH
11. SWITCH FOR LIGHTING FIXTURE MOUNTED IN BOX.
12. WEATHER-PROOF INCANDESCENT LIGHTING FIXTURE WITH 60 WATT, 120 V LAMP.
13. PHOTOCELL MOUNTED TO BOTTOM OF VENTED CONTROL CABINET OVERHANG
14. NO.8 AWG INSULATED GROUND WIRE
15. IN-LINE FUSEHOLDER WITH FUSE AS NOTED IN FUSE TABLE
16. GROUND BUS BAR 1/4"x1"x12" LONG MOUNTED ON PANEL WITH TAPS.
17. LUMINAIRE, 250 HPS
18. SURGE SUPPRESSOR

A CIRCUIT
C CIRCUIT
D CIRCUIT
E CIRCUIT

NOMINAL WATTAGE	FUSE SIZE
250	3.5 AMP
310	5.0 AMP

LUMINAIRE FUSE SIZE TABLE

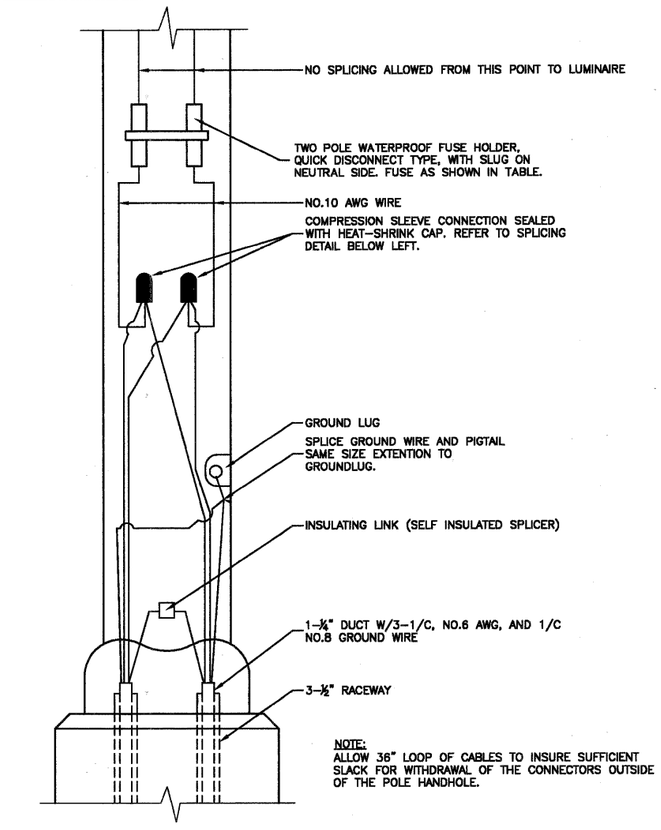

NOTE:
ALLOW 36" LOOP OF CABLES TO INSURE SUFFICIENT SLACK FOR WITHDRAWAL OF THE CONNECTORS OUTSIDE OF THE POLE HANDHOLE.

POLE HANDHOLE WIRING DIAGRAM

(TYPICAL FOR SINGLE LUMINAIRE INSTALLATION)

GENERAL NOTES FOR CONTROL CABINET

1. ENTIRE CONTROL CABINET SHALL BE GROUNDED.
2. ALL WIRING SHALL BE TAGGED WITH SELF-STICKING WIRE MARKERS.
3. GROUND BUS TO BE COLOR CODED GREEN, NEUTRAL BUS WHITE, AND BONDED TO CABINET. ENCLOSURE, BY LISTED PRESSURE CONNECTORS OR LISTED CLAMPS.
4. ALL INTERNAL CONTROLLER WIRING TO BE NO.12 AWG UNLESS OTHERWISE SPECIFIED.
5. CABINET WIRING INSULATION TO BE TYPE XHHW OR APPROVED EQUAL.

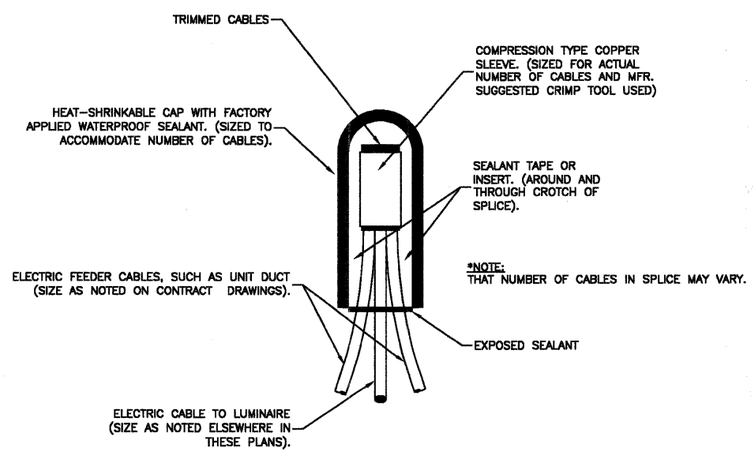

*NOTE:
THAT NUMBER OF CABLES IN SPLICE MAY VARY.

SPLICING ELECTRIC CABLES
BASIC MATERIALS AND METHODS

LIGHTING GENERAL NOTES

1. ALL WORK TO CONFORM TO THE NATIONAL ELECTRICAL CODE AND ANY APPLICABLE LOCAL CODES.
2. CONTRACTOR TO VERIFY LOCATION OF ALL UNDERGROUND UTILITIES BEFORE TRENCHING OR AUGERING.
3. BEFORE INSTALLING STANDARDS NEAR OVERHEAD FACILITIES CALL C.E. Co. FOR APPROVAL OF LOCATION.
4. FOR LOCATION OF EXISTING UNDERGROUND ELECTRICAL CABLE CALL C.E. Co.
5. SIZE ALL CONDUIT AS SPECIFIED ON DRAWINGS.
6. CONTRACTOR SHALL TAKE ALL NECESSARY MEASURES TO RESTORE ANY SPECIALIZED LANDSCAPING, (i.e. DECORATIVE ROCKS, SHRUBS, PLANTS, ECT.) OR SHALL REPLACE IT, THE COST OF WHICH SHALL BE CONSIDERED INCIDENTAL TO THE CONTRACT.

PLAN: SURVEYED / PLOTTED / ALIGNMENT CHECKED / RET. OF WAY CHECKED / PLAT FILE NAME / NOTE BOOK / NO. / BY / DATE

PROFILE: SURVEYED / PLOTTED / GRADES CHECKED / B.M. NOTED / NOTE BOOK / BY / DATE

FILE NAME = 09953-LGHT-03 - P03	USER NAME =	DESIGNED — PAP	REVISED —	STATE OF ILLINOIS DEPARTMENT OF TRANSPORTATION	71ST STREET			F.A.U. RTE.	SECTION	COUNTY	TOTAL SHEETS / SHEET NO.
		CHECKED — PKB	REVISED —		STREET LIGHTING - EXISTING CONTROLLER #2 LIGHTING DETAILS			1537	06-00050-00-GS	COOK	209 / 85
	PLOT SCALE = N/A	DRAWN — MJD	REVISED —							CONTRACT NO. 63556	
	PLOT DATE = 12/23/10	CHECKED — AG	REVISED —		SCALE: N/A	SHEET NO. 85 OF 209 SHEETS	STA. N/A TO STA. N/A	FED. ROAD DIST. NO. 1	ILLINOIS	FED. AID PROJECT CRE-9003(709)	