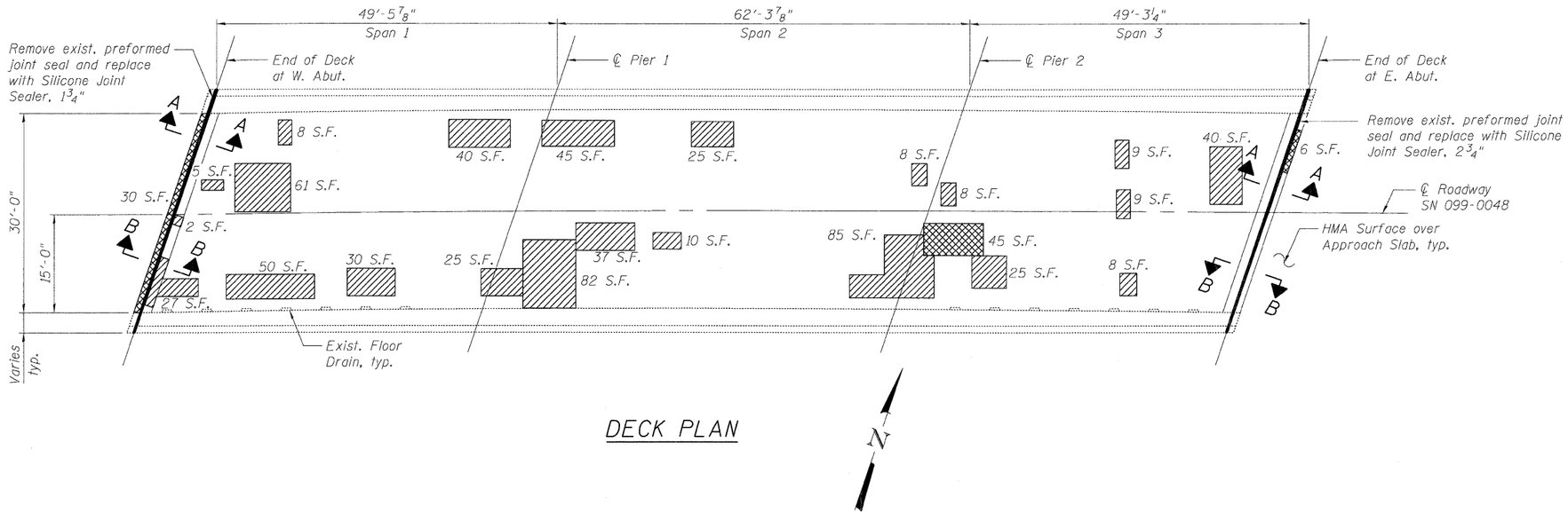

DECK PLAN

LEGEND

- Deck Slab Repair (Partial)
- Deck Slab Repair (Full Depth, Type II)

NOTES

1. Contractor may remove and replace guardrail/railing components to facilitate joint seal replacement. Cost included with Silicone Joint Sealer of the size specified.
2. Contractor shall remove weeds or other debris in joint during removal and replacement as directed by the Engineer. Cost included with Silicone Joint Sealer of the size specified.

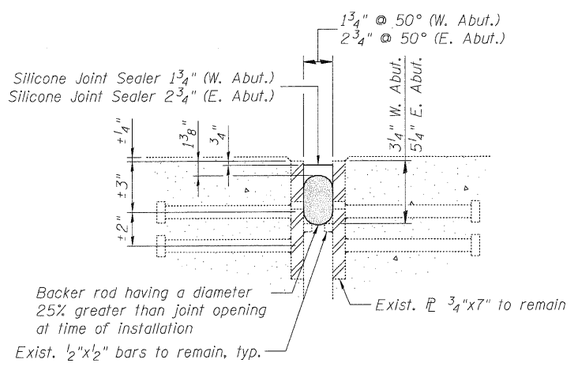

SECTION A-A

(Joint Details)
(Dimensions at Rt. L to ℄ Abut.)

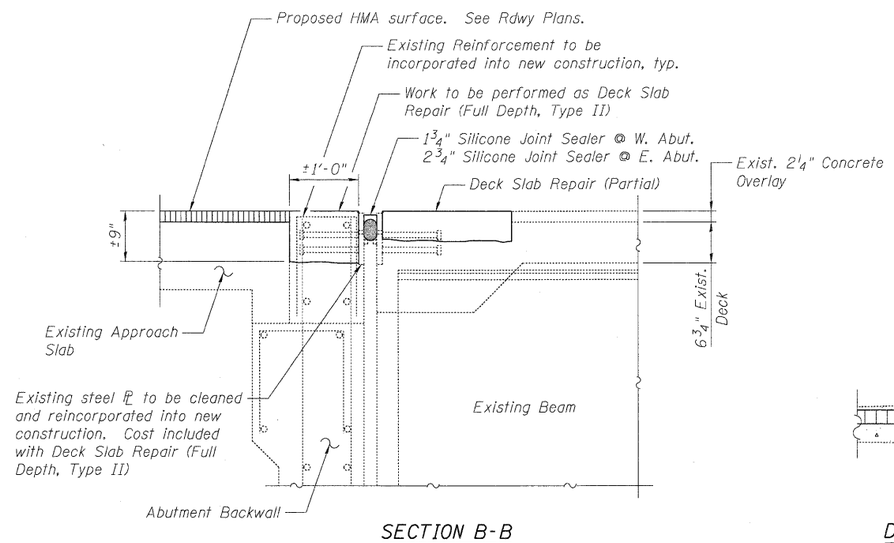

SECTION B-B

(Showing new concrete)
(Dimensions at Rt. L to ℄ Abut.)

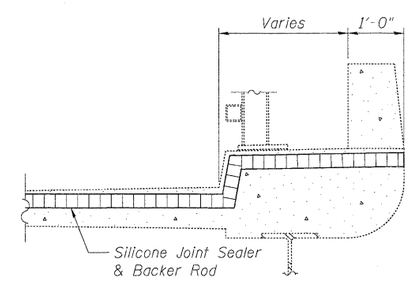

DETAIL FOR CURB TREATMENT

	DESIGNED - DF	REVISED -	
USER NAME = mueller	DRAWN - LAM	REVISED -	
PLOT SCALE = NTS	CHECKED - BLU	REVISED -	
PLOT DATE = 1/17/201 4:47:28 PM	DATE - 01/21/2011	REVISED -	

HBP Illinois Partners

STATE OF ILLINOIS
DEPARTMENT OF TRANSPORTATION

DECK AND JOINT REPAIR DETAILS
EASTBOUND FAI-80 OVER JOLIET JUNCTION TRAIL
STRUCTURE NO. 099-0048

SHEET NO. S-3 OF S-5 SHEETS

F.A.I RTE.	SECTION	COUNTY	TOTAL SHEETS	SHEET NO.
80	99-1-RS-4	WILL	116	100
		CONTRACT NO. 60M63		
FED. ROAD DIST. NO.	ILLINOIS	FED. AID PROJECT		

s:\056b\05_oadd\oadd sheets\0990048-60M63-003-RPR.dgn