11-02-2009

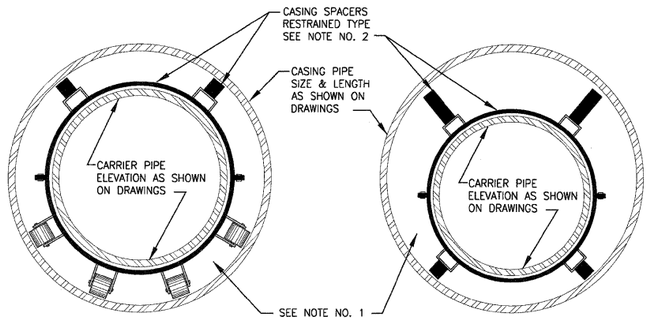

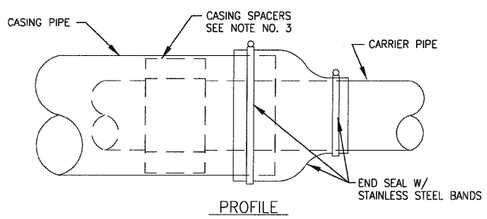

NOTES

1. FILLING OF ANNULAR SPACE BETWEEN CARRIER PIPE AND CASING PIPE IS NOT REQUIRED
2. WHERE CARRIER PIPE IS NOT CENTERED IN CASING PIPE, PROVIDE CASING SPACERS WITH LEGS THAT EXTEND TO WITHIN 1-INCH OF CASING INSIDE WALL ON ALL SIDES (RESTRAINED TYPE).
3. PROVIDE NUMBER OF SPACERS AS INSTRUCTED BY SPACER MANUFACTURER, WITH A MINIMUM OF ONE SPACER ON EACH SIDE OF A PIPE JOINT, AND ONE SPACER BETWEEN JOINTS. (THREE PER PIPE LENGTH)

CASING DETAIL

NO SCALE

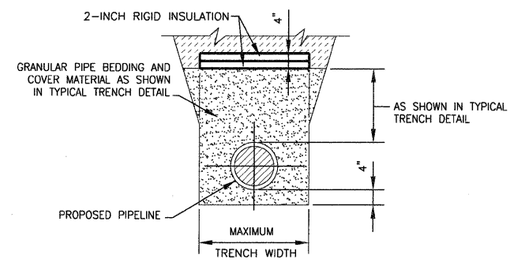

PIPE INSULATION DETAIL

NO SCALE

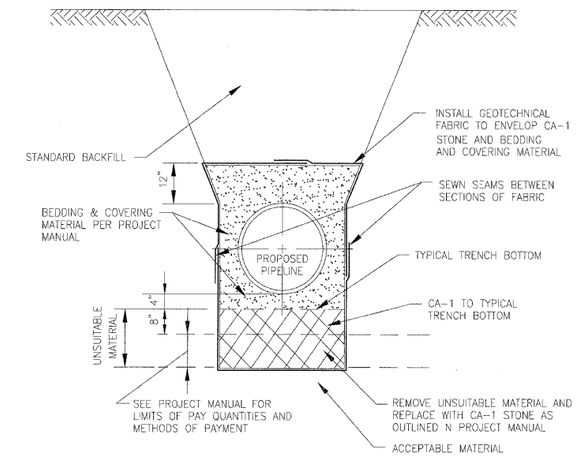

OPEN CUT PIPELINE INSTALLATION
UNSUITABLE MATERIAL
REMOVAL/REPLACEMENT DETAIL

NO SCALE

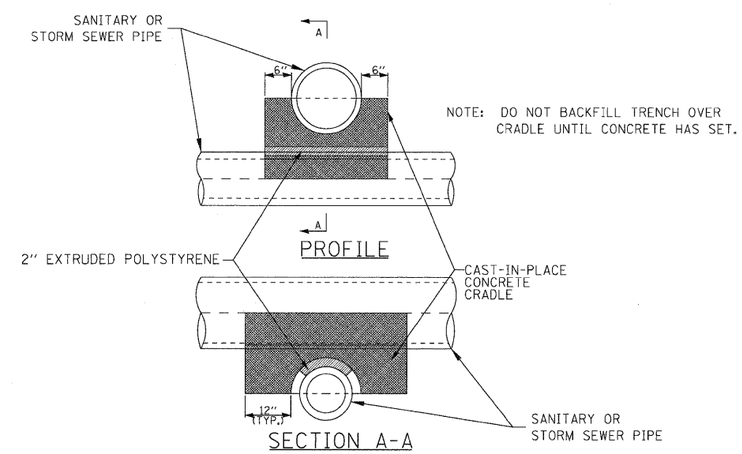

CONCRETE CRADLE
FOR SEWER PIPE SUPPORT*

NO SCALE

*TO BE USED WHEN CLEARANCE BETWEEN SEWER PIPES IS 6" OR LESS OR WHEN NOTED ON DRAWINGS

PLAN			
SURVEYED		BY	DATE
PLATTED			
BASE			
ALIGNMENT CHECKED			
R/W CHECKED			
NOTE BOOK	CADD FILE NAME		
NO.			

PROFILE			
SURVEYED		BY	DATE
PLATTED			
BASE			
GRADES CHECKED			
R/W CHECKED			
NOTE BOOK	STRUCTURE NOTATNS CH'KD		
NO.			

BAXTER & WOODMAN Consulting Engineers

USER NAME = (username)	DESIGNED - SMV	REVISED -8-27-10 VILLAGE REVIEW	
PLOT CONFIG= PDF22X34.plt	DRAWN - UKB	REVISED -	
PLOT SCALE = 1:1	CHECKED - SMV	REVISED -	
PLOT DATE = 11/24/2010 9:42:57 AM	DATE - 7-30-10	REVISED -	

Illinois Department of Transportation

ILLINOIS ROUTE 53
WATER AND SEWER REPLACEMENT DETAILS

SCALE:NONE | SHEET NO. * OF * | STA. TO STA.

F.A.U RTE.	SECTION	COUNTY	TOTAL SHEETS	SHEET NO.
2578	532B	DUPAGE	781	365
		CONTRACT NO. 60477		
FED. ROAD DIST. NO.	ILLINOIS	FED. AID PROJECT		

I:\Crystal Lake\ITASV\100547-Rt 53 W and S\CADD-SURVEY\DRAWINGS\DGNS\B&W-Details-sht.dgn