FAP ROUTE	SECTION	COUNTY	TOTAL SHEETS	SHEET NO
312	71BR	RANDOLPH	58	73
STA.		TO STA.		
CONTRACT NO.: 76125				

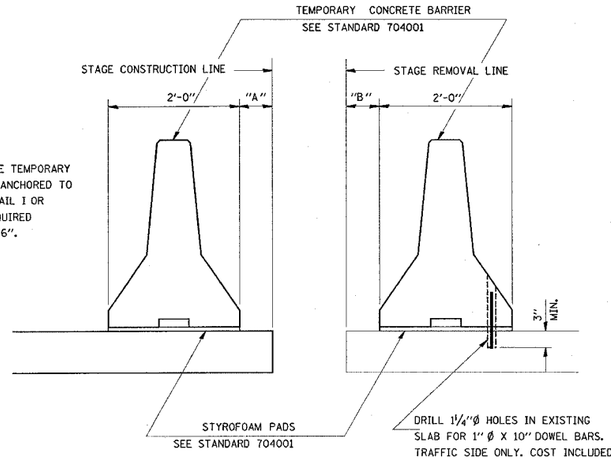

WHEN "A" IS 6" OR LESS, THE TEMPORARY CONCRETE BARRIER SHALL BE ANCHORED TO NEW SLAB ACCORDING TO DETAIL I OR DETAIL II. NO ANCHORAGE REQUIRED WHEN "A" IS GREATER THAN 6".

NEW SLAB

EXISTING SLAB

SECTIONS THRU SLAB

NOTES

DETAIL I - WITH BAR SPLICER OR COUPLERS:
CONNECT ONE (1) 1"X7"X10" STEEL ℙ TO THE TOP LAYER OF COUPLERS WITH 2-⅝"Ø BOLTS SCREWED TO COUPLER AT APPROXIMATE ℄ OF EACH 10'-0" BARRIER PANEL.

DETAIL II - WITH EXTENDED REINFORCEMENT BARS:
CONNECT ONE (1) 1"X7"X10" STEEL ℙ TO THE CONCRETE SLAB WITH 2-⅝"Ø EXPANSION ANCHORS OR CAST IN PLACE INSERTS SPACED BETWEEN THE TOP LAYER OF REINFORCEMENT AT APPROXIMATE ℄ OF EACH 10'-0" BARRIER PANEL.

COST OF ANCHORAGE IS INCLUDED WITH TEMPORARY CONCRETE BARRIER.

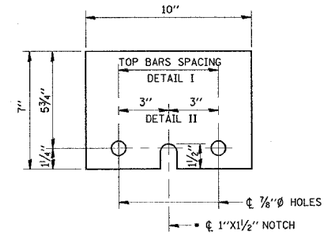

ℙ 1"x7"x10"

* REQUIRED ONLY WITH DETAIL II

TEMPORARY CONCRETE BARRIER

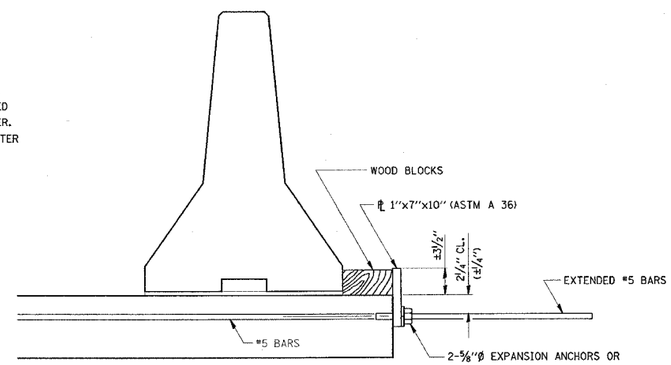

DETAIL II

THE 1"x7"x10" PLATE SHALL NOT BE REMOVED UNTIL STAGE II CONSTRUCTION FORMS AND ALL REINFORCEMENT BARS ARE IN PLACE AND THE CONCRETE IS READY TO BE PLACED.

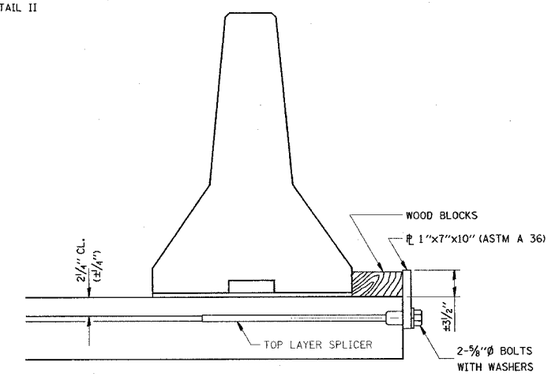

DETAIL I

THE 1"x7"x10" PLATE SHALL NOT BE REMOVED UNTIL STAGE II CONSTRUCTION FORMS AND REINFORCEMENT BARS ARE IN PLACE.

SHOULDER DRAIN DETAILS

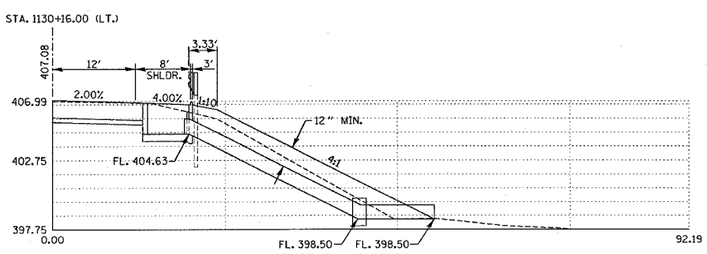

SLAB DRAIN CROSS SECTION

STA. 1130+16.00 (LT)

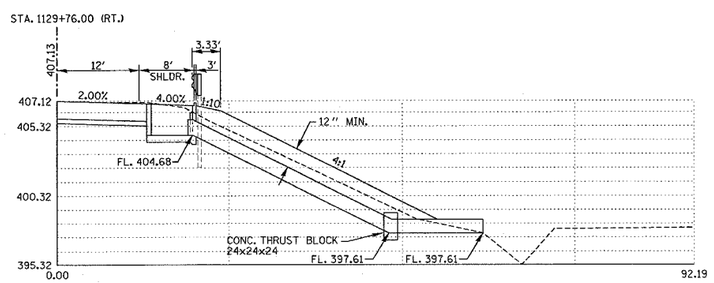

SLAB DRAIN CROSS SECTION

STA. 1129+76.00 (RT)

REVISIONS	
NAME	DATE

ILLINOIS DEPARTMENT OF TRANSPORTATION
TEMPORARY CONCRETE BARRIER FOR STAGE CONSTRUCTION & DRAIN DETAILS
FAP ROUTE 312
SECTION 71BR
RANDOLPH COUNTY
SN 079-0048

DRAWN BY:

PLOT DATE: Thursday December 16, 2004 @ 1:59:12 PM

(THIS TEXT CONSTRUCTION LINES) DESIGN DETAIL BR-A-3

PLAN | NOTE BOOK NO. | SCANNED | PLOTTED | ALIGNMENT CHECKED | RT. OF WAY CHECKED | CADD FILE NAME | BY | DATE

12/16/2004
Thursday December 16, 2004 @ 1:59:12 PM
c:\projects\ed80\projects\ed80design_v01-16.18-63