STATE OF ILLINOIS
DEPARTMENT OF TRANSPORTATION

| ROUTE NO. | SECTION | COUNTY | TOTAL SHEETS | SHEET NO. |
|---|---|---|---|---|
| F.A.P. 312 | 71BR | RANDOLPH | 73 | 37 |
| FED. ROAD DIST. NO. 7 | ILLINOIS | FED. AID PROJECT- | | |

SHEET NO. 13
31 SHEETS

Contract No. 76125

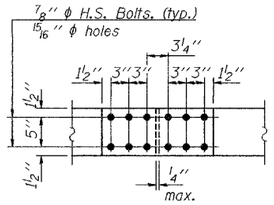


VIEW A-A

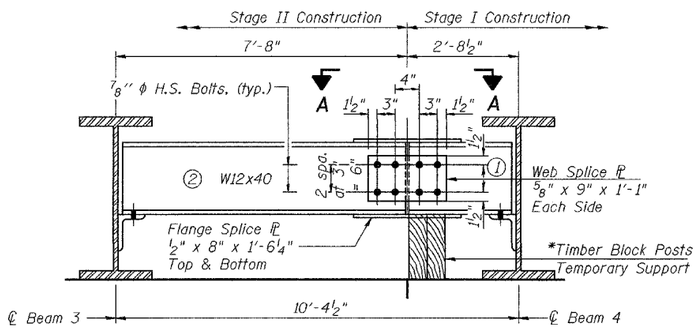


DIAPHRAGM D2
2 Required
(Looking North)

*Cost of Timber Block Posts is included with Furnishing and Erecting Structural Steel.

For details of connections to beams see diaphragm D. Dimensions given are parallel to ℄ Brg. except splice detail dimensions

## *TOP OF BEAM ELEVATIONS

| | ℄ Brg. S. Abut. | ℄ Brg. Pier 1 | ℄ Splice 1 | ℄ Splice 2 | ℄ Brg. Pier 2 | ℄ Brg. N. Abut. |
|---|---|---|---|---|---|---|
| Beam 1 | 406.632 | 406.421 | 406.385 | 406.251 | 406.227 | 406.086 |
| Beam 2 | 406.802 | 406.591 | 406.555 | 406.421 | 406.397 | 406.256 |
| Beam 3 | 406.939 | 406.728 | 406.692 | 406.558 | 406.534 | 406.393 |
| Beam 4 | 406.962 | 406.751 | 406.715 | 406.581 | 406.557 | 406.416 |
| Beam 5 | 406.870 | 406.659 | 406.623 | 406.489 | 406.465 | 406.324 |
| Beam 6 | 406.745 | 406.534 | 406.498 | 406.364 | 406.340 | 406.199 |

*For Fabrication only

## DIAPHRAGM D2 CONSTRUCTION SEQUENCE

1.) Order Diaphragm $D_2$ in two sections as shown above.
2.) Attach section ① of Diaphragm to Beam 4 and top flange splice PL during Stage I Construction
3.) Place Timber Block Posts between section ① of diaphragm and abutment bearing seat.
4.) Attach section ② of diaphragm to both Beam 3 and section ① of diaphragm during Stage II Construction.
5.) Attach web splice plates to sections ① and ② of diaphragms.
6.) Remove Timber Block Posts.
7.) Attach bottom flange splice plate to sections ① and ② of diaphragms.

| INTERIOR BEAM MOMENT TABLE | | | | |
|---|---|---|---|---|
| | | 0.4 Sp. 1 0.6 Sp. 3 | Pier 1 or 2 | 0.5 Sp. 2 |
| Is | (in⁴) | 3620 | 3620 | 3620 |
| Ic (n) | (in⁴) | 10983 | | 10983 |
| Ic (3n) | (in⁴) | 8330 | | 8330 |
| Ss | (in³) | 245 | 245 | 245 |
| Sc (n) | (in³) | 382 | | 382 |
| Sc (3n) | (in³) | 348 | | 348 |
| Z | (in³) | | 283 | |
| wℓ | (k/ft.) | 0.801 | 1.304 | 0.801 |
| * Mℓ | ('k) | 207 | 377 | 137 |
| sℓ | (k/ft.) | 0.503 | | 0.503 |
| * Msℓ | ('k) | 146 | | 126 |
| * Mℓ | ('k) | 440 | 193 | 433 |
| * M (Imp) | ('k) | 121 | 52 | 116 |
| 5/3[Mℓ+M(Imp)] | ('k) | 935 | 408 | 915 |
| Ma | ('k) | 1675 | 1021 | 1531 |
| Mu | ('k) | 2144 | 1179 | 2144 |
| fsℓ non-comp | (k.s.i.) | 10.1 | 18.5 | 6.7 |
| fsℓ (comp) | (k.s.i.) | 5.0 | | 4.3 |
| fs 5/3(ℓ+Imp) | (k.s.i.) | 29.4 | 20.0 | 28.7 |
| fs (Overload) | (k.s.i.) | 44.6 | 38.5 | 39.7 |
| VR | (k) | 53.7 | | 44.5 |

*Moments in this table have been calculated using redistribution. AASHTO 10.48.1.3

| INTERIOR BEAM REACTION TABLE | | | |
|---|---|---|---|
| | | Abut. | Pier |
| Rℓ | (k) | 29.6 | 85.2 |
| Rℓ | (k) | 39.1 | 46.1 |
| Imp. | (k) | 10.8 | 12.3 |
| R (Total) | (k) | 79.5 | 143.6 |

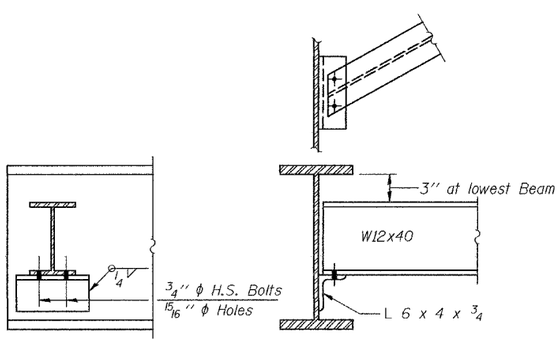


DIAPHRAGM D
8 Required

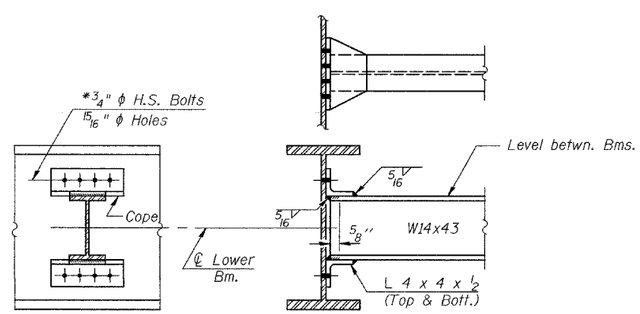


DIAPHRAGM D1
47 Required

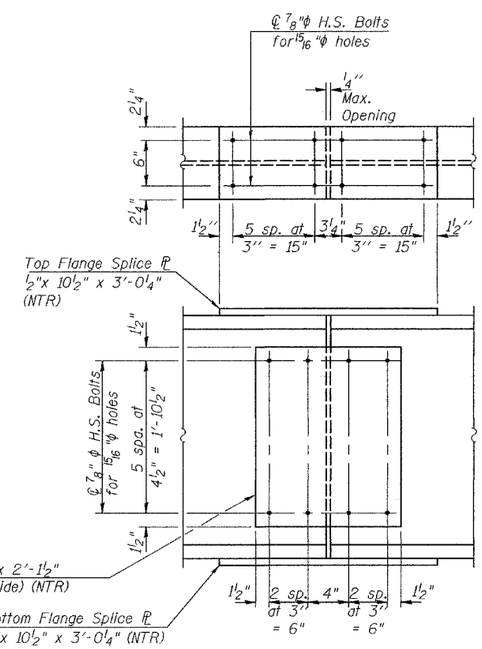


SPLICE
12 required

Is and Ss are the moment of inertia and section modulus of the steel section used in computing fs (Total & Overload).

$Ic_{(n)}$ and $Sc_{(n)}$ are the moment of inertia and section modulus of the composite section used in computing stresses due to Live Load.

$Ic_{(3n)}$ and $Sc_{(3n)}$ are the moment of inertia and section modulus of the composite section used in computing stresses due to superimposed dead loads.

VR is the maximum Live Load + Impact shear range in span.

Z is the plastic section modulus used to determine the fully plastic moments in the non-composite areas.

Ma (Applied Moment)=1.3[Mℓ + Msℓ + 5/3(Mℓ + M(Imp))].

The Plastic Moment capacity (Mu) is computed according to AASHTO 10.48.1 and 10.50.1.1.

fs (Overload) is the sum of the stresses due to Mℓ + Msℓ + 5/3(Mℓ + M(Imp))].

Mℓ - Moment due to dead loads on non-composite section.

Msℓ - Moment due to dead loads on composite section.

Mℓ - Moment due to live load on non-composite or composite section.

M(Imp)- Moment due to live load impact on non-composite or composite section.

Note:
Two hardened washers shall be required over all oversize holes for diaphragms.
All splice plates except those splice plates for Diaphragm D2 shall be AASHTO M270 GRade 50.

*1 1/2" vertical x 13/16" slotted holes in top and bottom of connection angles at the East side of beam 3 only, except at the Pier. Provide 5/16" Plate washers for slotted holes. The bolts for the slotted holes in angles at beam 3 shall be finger tightened prior to the deck slab pouring of Stage II Construction and then be fully tightened after completion of Stage II Pour.

| | |
|---|---|
| DESIGNED | J.E. Kramer |
| CHECKED | T.L. Kurtenbach |
| DRAWN | A.M. Seiber |
| CHECKED | JEK/TLK |

January 26 2025
EXAMINED Thomas J. Domagalski
ENGINEER OF BRIDGE DESIGN
PASSED Ralph E. Anderson
ENGINEER OF BRIDGES AND STRUCTURES

STRUCTURAL STEEL DETAILS
F.A.P. RT. 312 - SEC. 71BR
RANDOLPH COUNTY
STATION 1128+90
STRUCTURE NO. 079-0048

..\projects\rpa00065\0790048.cgr 1/24/2005 1:28:11 PM