CONCRETE COLLARS FOR PIPE OR BOX CULVERT EXTENSIONS

F.A. RTE.	SECTION	COUNTY	TOTAL SHEETS	SHEET NO.
STA.		TO STA.		
FED. ROAD DIST. NO.	ILLINOIS	FED. AID PROJECT		

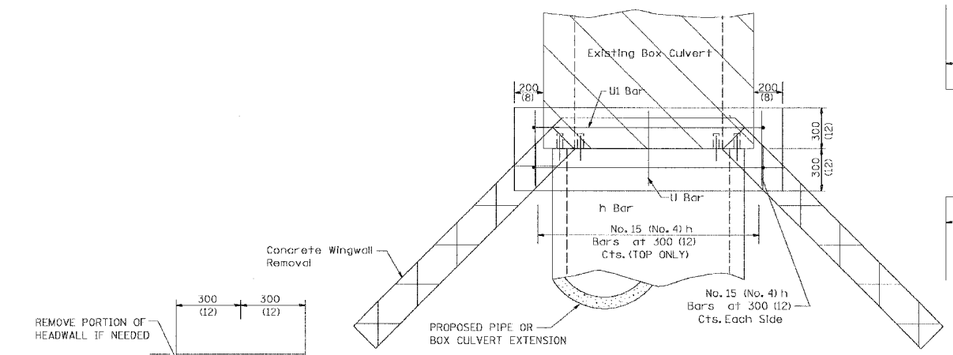

PLAN OF CULVERT WITH ANGLED WING WALLS

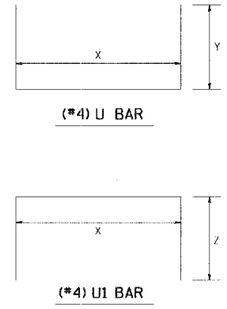

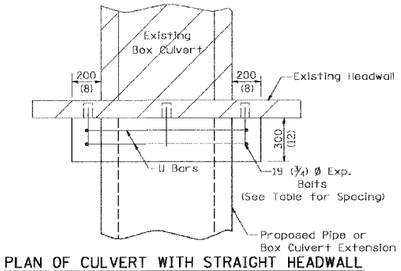

PLAN OF CULVERT WITH STRAIGHT HEADWALL

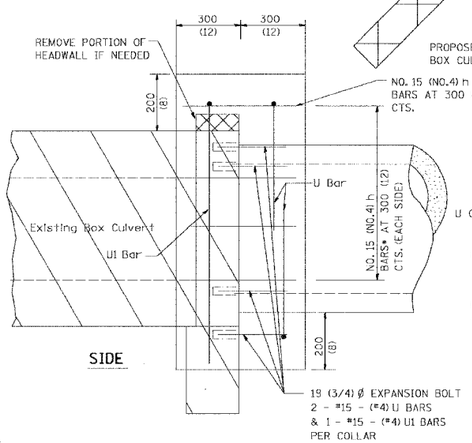

SIDE

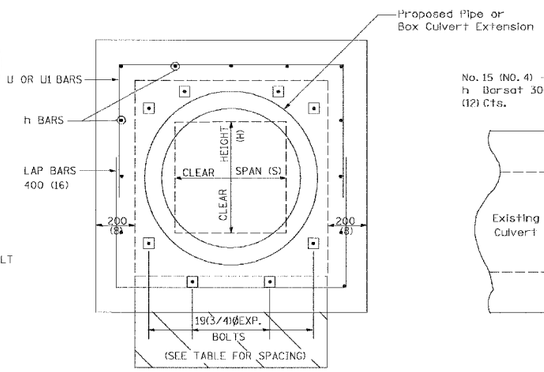

FRONT

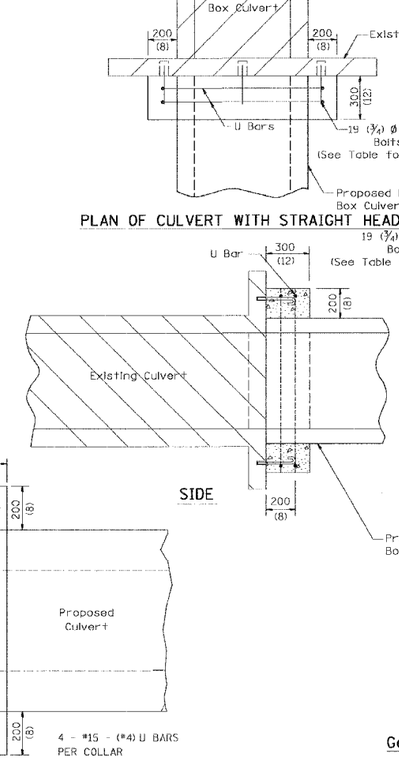

SIDE

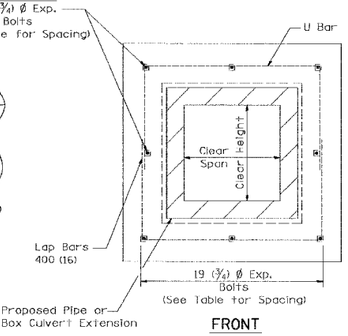

FRONT

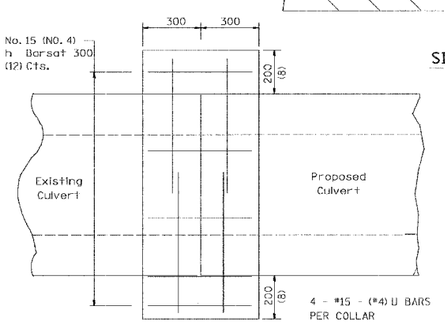

CULVERT CONNECTION WITHOUT EXISTING HEADWALL

PLACEMENT DETAILS FOR EXPANSION BOLTS

H OR S	NUMBER OF EXPANSION BOLTS REQUIRED PER SIDE			
	EXTENSIONS < 4.57m (15')		EXTENSIONS > 4.57m (15')	
	NUMBER	SPACING	NUMBER	SPACING
600 (24)	*		*	
750 (30)	2	450 (18)	2	450 (18)
900 (36)	2	600 (24)	2	600 (24)
1200 (48)	3	450 (18)	3	450 (18)
1500 (60)	4	400 (16)	3	600 (24)
1800 (72)	5	375 (15)	4	500 (20)
2100 (84)	5	450 (18)	4	600 (24)
2400 (96)	6	375 (15)	5	525 (21)
2700 (108)	6	475 (19)	5	600 (24)
3000 (120)	7	450 (18)	6	525 (21)
3300 (132)	8	425 (17)	6	600 (24)
3600 (144)	8	475 (19)	7	550 (22)

* MINIMUM ONE PER SIDE

Bill of Materials

STATION	DIMENSIONS X	DIMENSIONS Y	h Bar No.	U Bar No.	U Bar Length	EXPANSION BOLTS No.	CONCRETE COLLAR Cu. m.	REINF. BARS KG
All h Bars 450 (18) Long					Total			

General Notes

Concrete Collars shall be constructed of Class SI Concrete in accordance with Section 503 of the Standard Specifications

Reinforcement bars shall conform to Section 508 of the Standard Specifications.

The concrete will be paid for at the contract unit price per cubic meter (cubic yard) for CONCRETE COLLAR. Reinforcement will be paid for at the contract unit price per kilogram (pound) for REINFORCEMENT BARS. Expansion Bolts, when required, will be paid for at the contract unit price each for EXPANSION BOLTS of the size indicated, which price shall include furnishing, drilling holes, and installing the expansion bolts complete in place. These bolts shall extend at least 200 (8 inches) into the new concrete.

ILLINOIS DEPARTMENT OF TRANSPORTATION

REVISIONS NAME	DATE

SCALE: VERT. HORIZ.

DATE

DRAWN BY

CHECKED BY

Tue Nov 04 13:09:27 2003
c:\pw_work\d25\tmp\d25ir1.dgn

...\D750CSP2.dgn 12/22/2004 01:32:15 PM