CONTRACT NO. 64647

F.A.P. RTE.	SECTION	COUNTY	TOTAL SHEETS	SHEET NO.
595	1-3-K	ROCK ISLAND	476	247
STA.		TO STA.		
FED. ROAD DIST. NO.	ILLINOIS	FED. AID PROJECT		

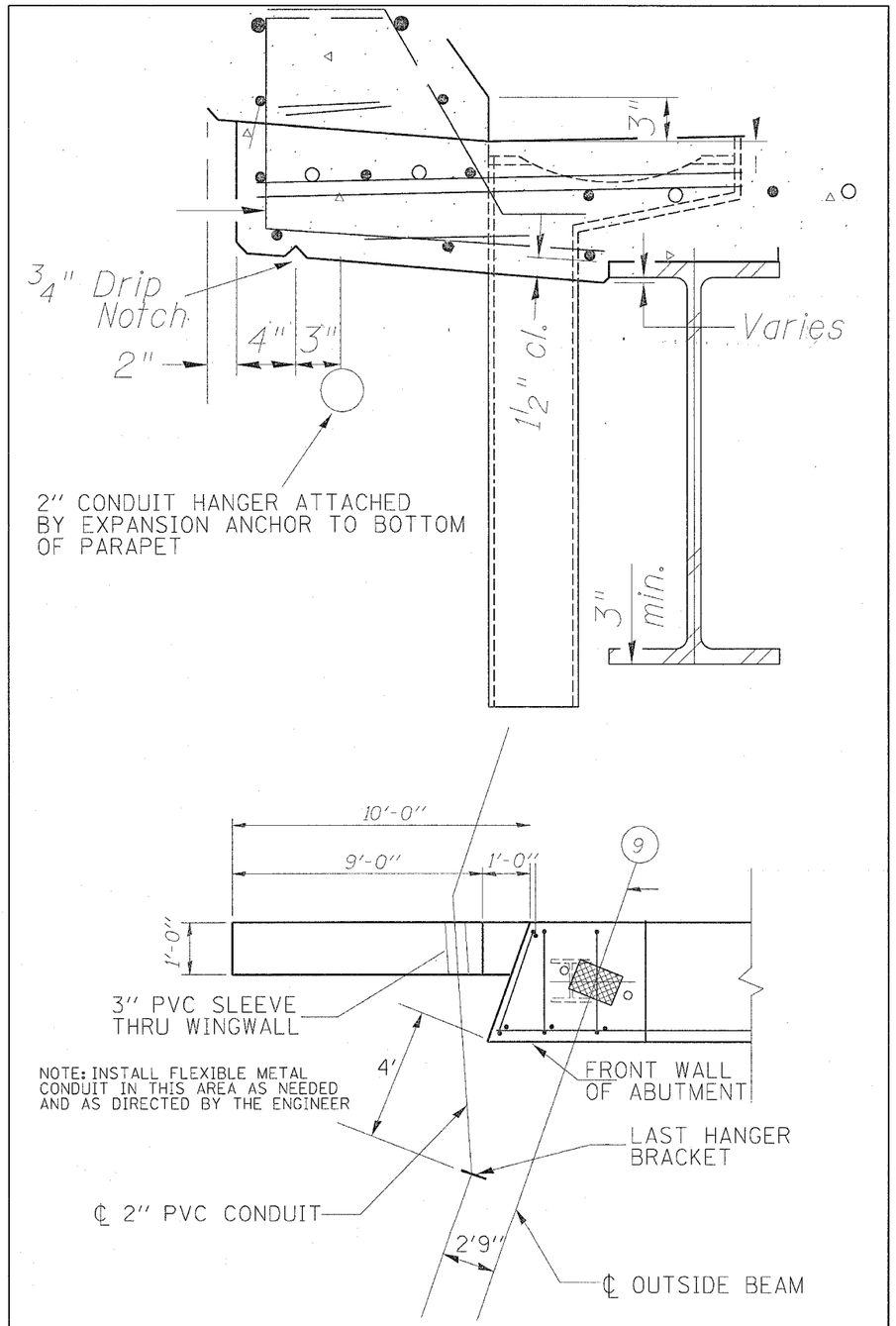

DETAILS GALVANIZED STEEL CONDUIT ATTACHED TO STRUCTURE

PHASE DESIGNATION DIAGRAM
RAMPS 1 & 2 (52nd Ave.)

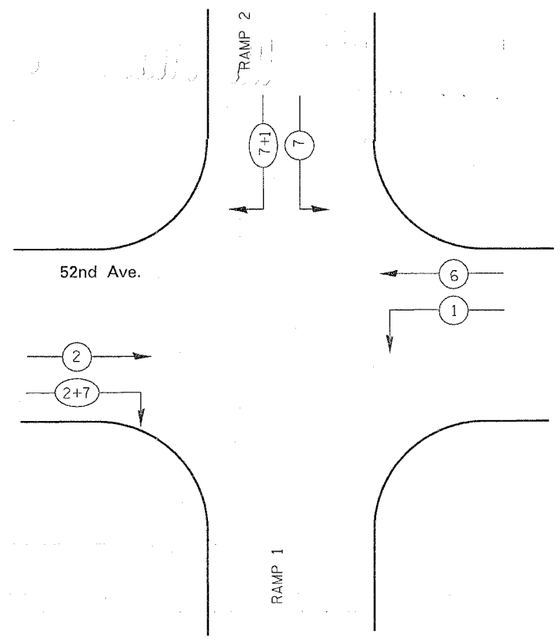

WIRING DIAGRAM RAMPS 1 & 2

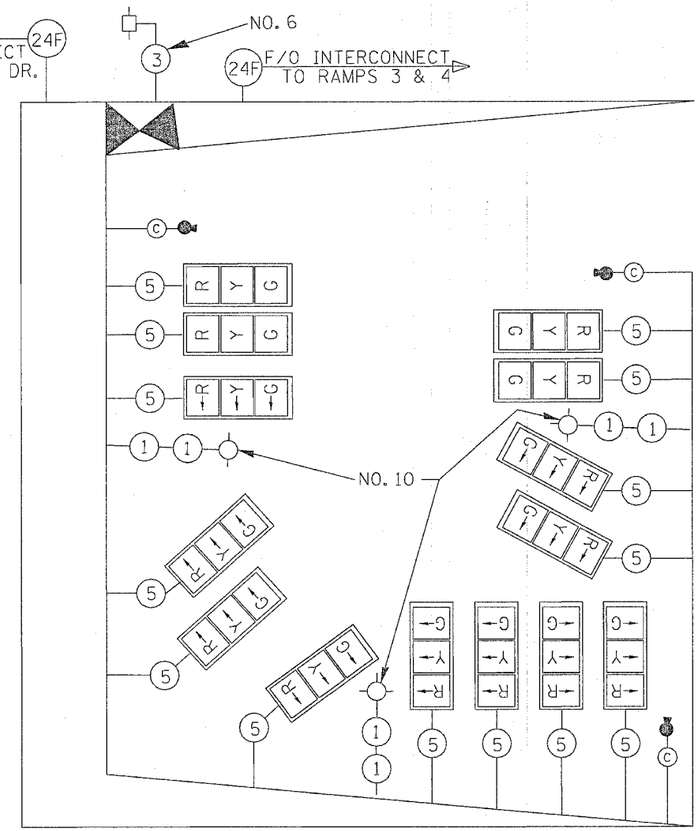

"C" DENOTES COAXIAL AND OTHER NECESSARY CABLES FOR VIDEO DETECTION
"G" DENOTES 1C NO. 6 GROUNDING CABLE TO CONNECT ALL MAST ARMS AND THE CONTROLLER TO THE GROUNDING ROD IN THE DOUBLE HANDHOLE

NOTE: ONLY ONE(1) METER MAY BE MOUNTED ON A POWER POLE UNLESS OTHERWISE ALLOWED BY MID AMERICAN ENERGY. THE CONTRACTOR SHALL ARRANGE FOR OTHER MOUNTING OPTIONS AS DIRECTED AND APPROVED BY THE ENGINEER. COST INCLUDED IN SERVICE INSTALLATION, TYPE A, (MODIFIED)

RAMP 1 AND 2 TRAFFIC SIGNALS