CONTRACT NO. 64647

F.A.P. RTE.	SECTION	COUNTY	TOTAL SHEETS	SHEET NO.
595	1-3-K	ROCKISLAND	476	240E
STA.		TO STA.		
FED. ROAD DIST. NO.	ILLINOIS	FED. AID PROJECT		

STATE OF ILLINOIS
DEPARTMENT OF TRANSPORTATION

For anchor rod size and placement, see Support Frame Detail Sheet.

*Anchor rod shall be ground or filed to bright metal at clamp and cable connection location.

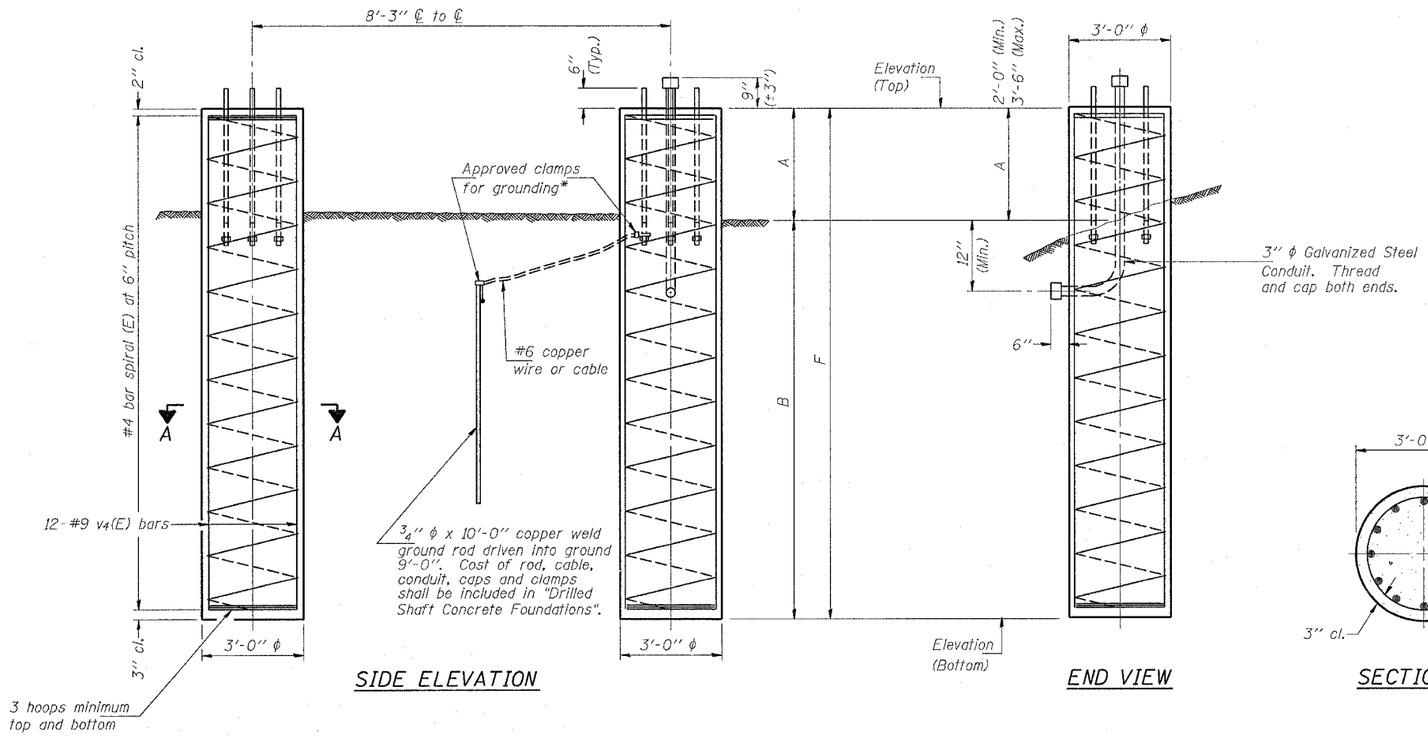

SIDE ELEVATION

END VIEW

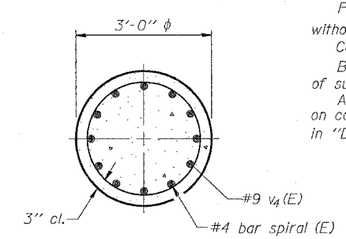

SECTION A-A

BAR LIST - EACH FOUNDATION

Bar	Number	Size	Length	Shape
v4(E)	24	#9	F less 5"	———
#4 bar spiral (E) - see "SIDE ELEVATION"				

NOTES:

The foundation dimensions shown are based on the presence of mostly cohesive soils with an average Unconfined Compressive Strength (Qu) of at least 1.25 tsf, which must be determined by previous soil investigations at the jobsite. When other conditions are indicated, the boring data will be included in the plans and the foundation dimensions shown will be the result of site specific designs.

If the conditions encountered are different than those indicated, the Contractor shall notify the Engineer to determine if the foundation dimensions need to be modified. If dimensions "B" or "F" are revised by more than 12" by the Contractor, "as-built" plans shall be prepared and submitted to the District Bureau of Operations for future reference.

No sonotubes or decomposable forms shall be used below the lower conduit entrance.

Permanent metal forms or other shielding may not be left in place below that elevation without the Engineer's written permission.

Concrete shall be placed monolithically, without construction joints.

Backfill shall be placed per Article 502 of Standard Specification and prior to erection of support column.

A normal surface finish followed by a Bridge Seat Sealer application will be required on concrete surfaces above the lowest elevation 6" below finished ground line. Cost included in "Drilled Shaft Concrete Foundation".

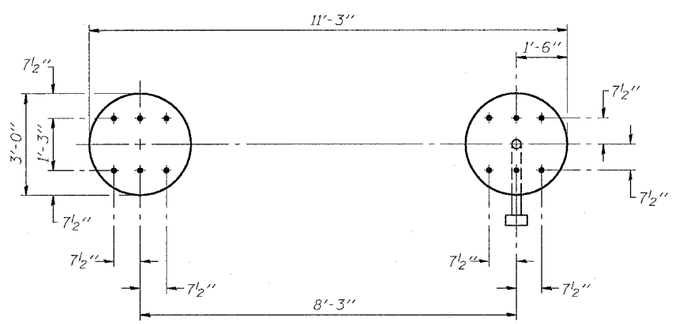

PLAN

Structure Number	Station	Left Foundation					Right Foundation					Class SI Concrete (Cu. Yds.)
		Elevation Top	Elevation Bottom	A	B	F	Elevation Top	Elevation Bottom	A	B	F	
2S081NMB35900	359+00	590.487	570.987	2	17.5	19.5	590.366	570.866	2	17.5	19.5	22.7
2S081NMB38150	381+50	580.057	557.557	2	20.5	22.5	576.849	554.349	2	20.5	22.5	26.2

OVERHEAD SIGN STRUCTURES
DRILLED SHAFT DETAILS

ILLINOIS DEPARTMENT OF TRANSPORTATION

DETAILS FOR 10" ϕ SUPPORT FRAME
TYPE I-A or II-A TRUSS

DESIGNED -	
CHECKED -	
DRAWN -	
CHECKED -	

EXAMINED - 20
ENGINEER OF BRIDGE DESIGN

PASSED
ENGINEER OF BRIDGES AND STRUCTURES

PLOT DATE = Wed Jan 26 07:32:18 2005
FILE NAME = c:\projects\bsl\bwq\sign sheets.dgn
PLOT SCALE = 20.0000 ' / IN.
REFERENCE = STEP6

OS4-F3 11/1/2002