CONTRACT NO. 64647

F.A.P. RTE.	SECTION	COUNTY	TOTAL SHEETS	SHEET NO.
595	1-3-6	ROCK ISLAND	476	239C
STA. _____		TO STA. _____		
FED. ROAD DIST. NO.	ILLINOIS	FED. AID PROJECT		

* Center of horizontal to center of splice dimension may vary. Verify before drilling holes in mounting tube.

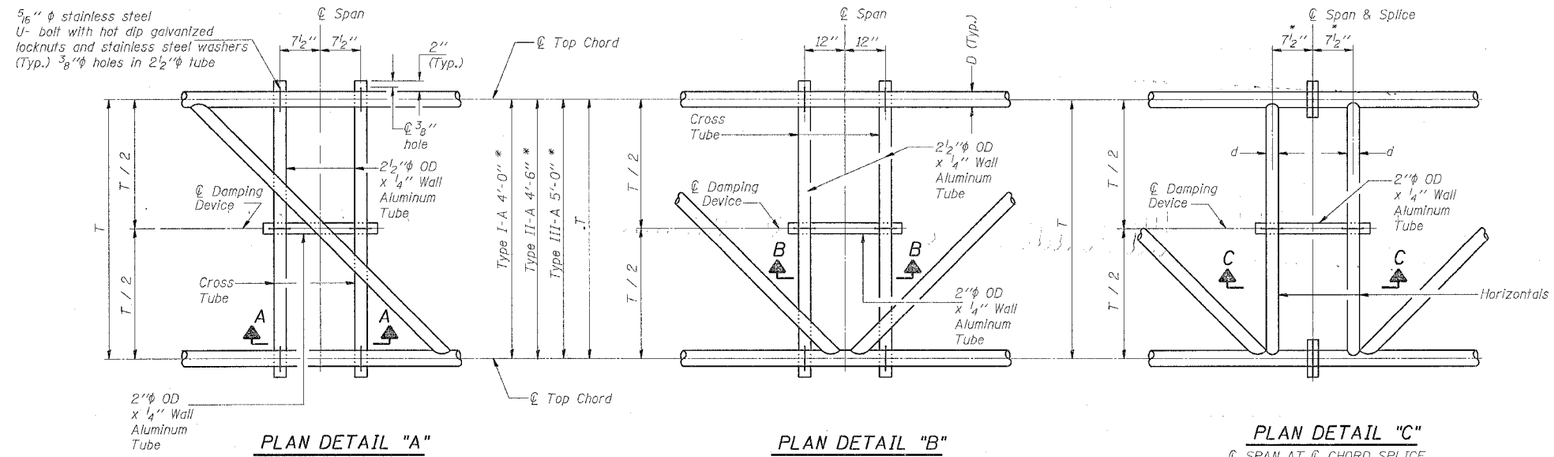

PLAN DETAIL "A"
℄ SPAN BETWEEN PANEL POINTS

PLAN DETAIL "B"
℄ SPAN AT PANEL POINT

PLAN DETAIL "C"
℄ SPAN AT ℄ CHORD SPLICE

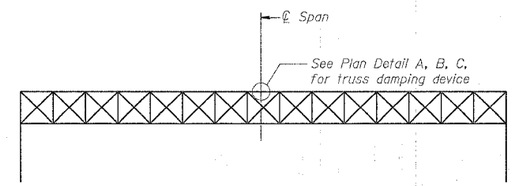

ELEVATION
Aluminum Overhead Sign Truss

NOTES

Damper: One damper per truss. (31 lbs. Stockbridge-Type Aluminum) Cost included in "Overhead Sign Structure..."

Materials: Aluminum tubes shall be ASTM B221 alloy 6061 temper T6. Cost included in "Overhead Sign Structure..."

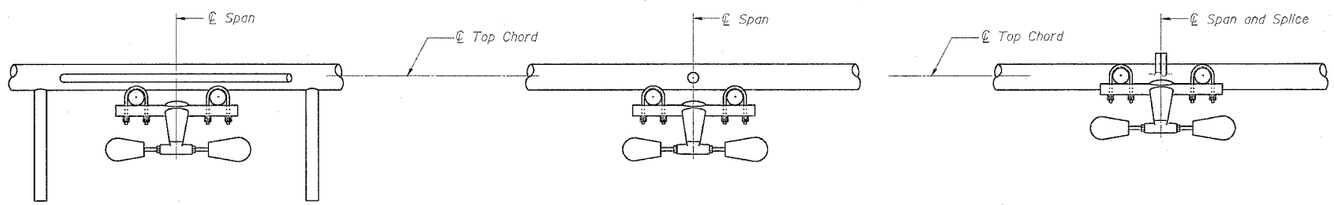

SECTION A-A

SECTION B-B

SECTION C-C

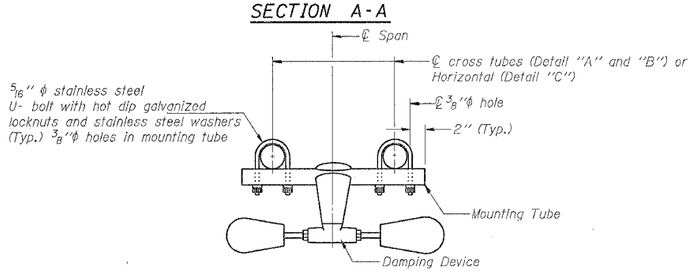

TRUSS DAMPING DEVICE CONNECTION DETAIL
(Typical)

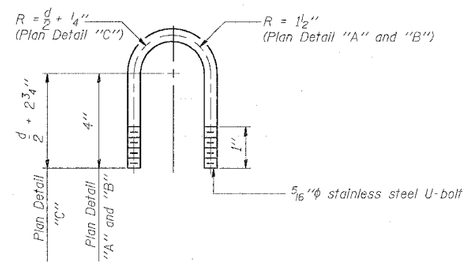

DAMPING DEVICE MOUNTING TUBE U-BOLT DETAIL
(Typical)

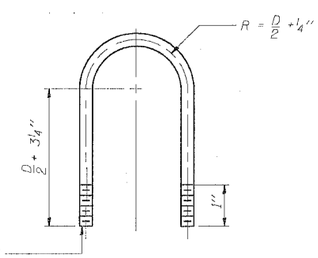

TOP CHORD TO CROSS TUBE U-BOLT DETAIL
(Typical - Detail "A" and "B")

OS-A-D 11/1/2002

OVERHEAD SIGN STRUCTURE
DAMPING DEVICE

REVISIONS NAME	DATE

ILLINOIS DEPARTMENT OF TRANSPORTATION

SCALE: VERT. HORIZ.
DATE
DRAWN BY
CHECKED BY

PLOT DATE = Wed Dec 22 13:56:25 2004
PLOT NAME = c:\DOCUMENTS and Settings\boutekiver.g\Desktop\bait-eg north\d7580\sign sheets.dgn
PLOT SCALE = 10.0000 ' / IN.
REFERENCE = REF