CONTRACT NO. 64647

F.A.P. RTE.	SECTION	COUNTY	TOTAL SHEETS	SHEET NO.
595	1-3-K	ROCK ISLAND	476	30
STA.		TO STA.		
FED. ROAD DIST. NO.	ILLINOIS	FED. AID PROJECT		

TYPICAL SECTIONS

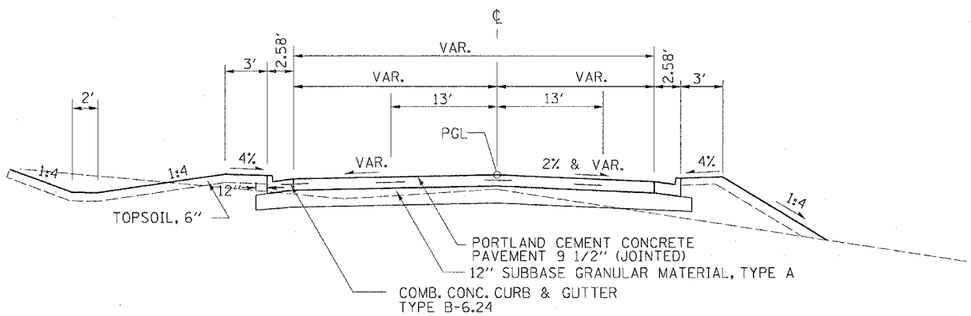

TRINITY DRIVE (STA. 0+33.00 - 0+98.45)

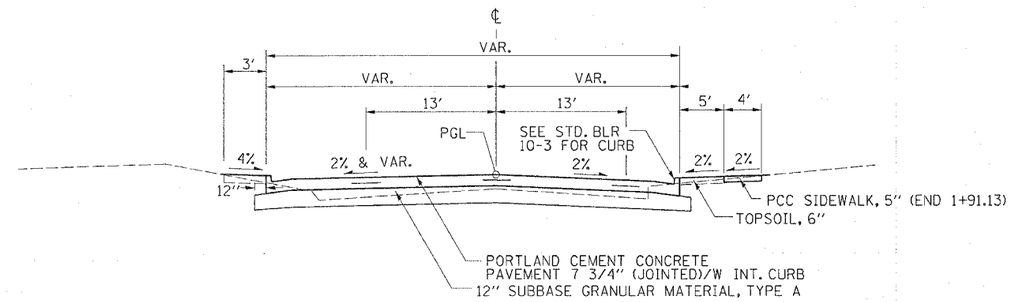

TRINITY DRIVE (STA. 0+98.45 - 2+92.62)

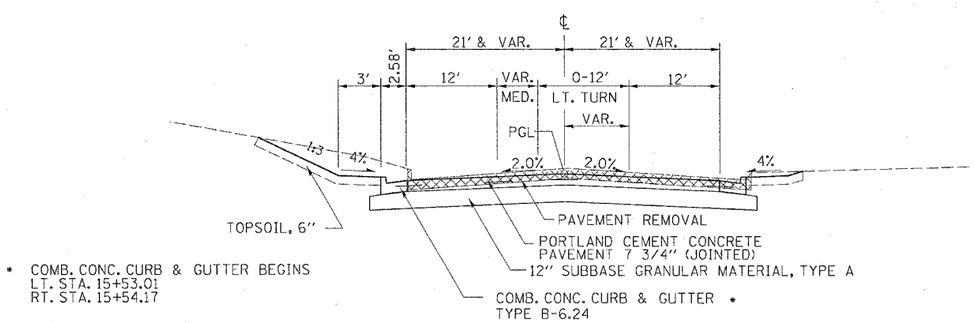

44TH STREET (STA. 15+00.00 - 17+00.00)

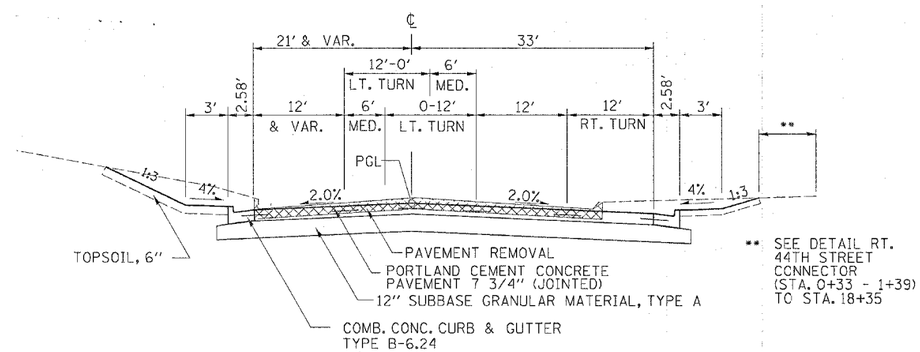

44TH STREET (STA. 17+00.00 - 19+68.75)