03-10-2023 LETTING ITEM 125

VAR. RTE	SECTION	COUNTY	TOTAL SHEETS *	SHEET NO.
VAR.	FAI VARIOUS BRIDGE SEALING	COOK	75	1
		ILLINOIS	CONTRACT NO. 62U35	

* 75 + 1 = 76 TOTAL SHEETS

D-91-040-23

STATE OF ILLINOIS
DEPARTMENT OF TRANSPORTATION

FOR INDEX OF SHEETS, SEE SHEET NO. 2

PROPOSED HIGHWAY PLANS

ROUTE: VARIOUS

VARIOUS BRIDGES IN DISTRICT ONE
SECTION: FAI VARIOUS BRIDGE SEALING

BRIDGE DECK SEALING, BRIDGE JOINT REPLACMENT, & BRIDGE DECK PATCHING
COOK COUNTY

C-91-049-23

LOCATION OF SECTION INDICATED THUS:-

FOR LOCATION MAPS, SEE SHEET NO. 6 & 7

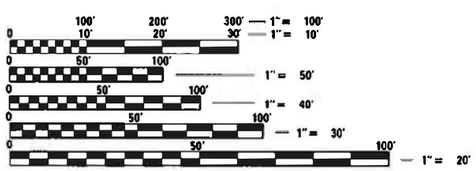

FULL SIZE PLANS HAVE BEEN PREPARED USING STANDARD ENGINEERING SCALES. REDUCED SIZED PLANS WILL NOT CONFORM TO STANDARD SCALES. IN MAKING MEASUREMENTS ON REDUCED PLANS, THE ABOVE SCALES MAY BE USED.

J.U.L.I.E.
JOINT UTILITY LOCATION INFORMATION FOR EXCAVATORS
1-800-892-0123
OR 811

STATE OF ILLINOIS
DEPARTMENT OF TRANSPORTATION

SUBMITTED November 16 20 22

REGIONAL ENGINEER

February 3, 2023

ENGINEER OF DESIGN AND ENVIRONMENT

February 3, 2023

DIRECTOR OF HIGHWAYS PROJECT IMPLEMENTATION

PROJECT ENGINEER: RODRIGO LEDEZMA (847)705-4580
PROJECT MANAGER: JEAN ALAIN MIDY (847)221-3056

CONTRACT NO. 62U35

PRINTED BY THE AUTHORITY OF THE STATE OF ILLINOIS

REV-SEP

INDEX OF SHEETS

STATE STANDARDS

701006-05	OFF- ROAD MOVING OPERATION 2L, 2W 15' TO 24" FROM PAVEMENT EDGE
701101-05	OFF-ROAD OPERATIONS, MULTILANE, 15' (4.5 M) TO 24" (600 MM) FROM PAVEMENT EDGE
701301-04	LANE CLOSURE, 2L, 2W, SHORT TIME OPERATIONS
701311-03	LANE CLOSURE 2L, 2W MOVING OPERATIONS - DAY ONLY
701400-09	APPROACH TO LANE CLOSURE, FREEWAY/EXRESSWAY
701401-13	LANE CLOSURE, FREEWAY/EXRESSWAY
701411-09	LANE CLOSURE, MULTILANE, AT ENTRANCE OR EXIT RAMP FOR SPEED > 45 MPH
701427-05	LANE CLOSURE, MULTILANE, INTERMITTENT OR MOVING OPERATIONS FOR SPEEDS < 40 MPH
701428-01	TRAFFIC CONTROL SETUP AND REMOVAL FREEWAY/EXPRESSWAY
701456-05	PARTIAL EXIT RAMP CLOSURE FREEWAY/EXPRESSWAY
701501-06	URBAN LANE CLOSURE, 2L, 2W, UNDIVIDED
701502-09	URBAN LANE CLOSURE 2L, 2W, WITH BIDIRECTIONAL LEFT TURN LANE
701601-09	URBAN LANE CLOSURE MULTILANE, 1W OR 2W WITH NONTRAVERSABLE MEDIAN
701606-10	URBAN SINGLE LANE CLOSURE, MULTILANE, 2W WITH MOUNTABLE MEDIAN
701701-10	URBAN LANE CLOSURE, MULTILANE INTERSECTION
701801-06	SIDEWALK, CORNER OR CROSSWALK CLOSURE
701901-08	TRAFFIC CONTROL DEVICES

GENERAL NOTES

1. BEFORE STARTING ANY EXCAVATION, THE CONTRACTOR SHALL CALL "C.U.A.N." (CHICAGO UTILITY ALERT NETWORK) AT (312)744-7000 FOR FIELD LOCATIONS OF BURIED ELECTRIC, TELEPHONE AND GAS UTILITIES. 48 HOUR NOTIFICATION IS REQUIRED.

2. THE CONTRACTOR SHALL COORDINATE CONSTRUCTION ACTIVITIES WITH UTILITY COMPANIES AND THE CITY OF CHICAGO AND OBTAIN ALL NECESSARY PERMITS.

3. PLAN DIMENSIONS AND DETAILS RELATIVE TO EXISTING PLANS ARE SUBJECT TO NOMINAL CONSTRUCTION VARIATIONS. THE CONTRACTOR SHALL FIELD VERIFY EXISTING DIMENSIONS AND DETAILS AFFECTING NEW CONSTRUCTION AND MAKE NECESSARY APPROVED ADJUSTMENTS PRIOR TO CONSTRUCTION OR ORDERING OF MATERIALS. SUCH VARIATIONS SHALL NOT BE CAUSE FOR ADDITIONAL COMPENSATION FOR A CHANGE IN SCOPE OF THE WORK, HOWEVER, THE CONTRACTOR WILL BE PAID FOR THE QUANTITY ACTUALLY FURNISHED BASED AT THE UNIT PRICE BID FOR THE WORK.

4. THE CONTRACTOR WILL NOT BE ALLOWED TO SET UP A YARD OR FIELD OFFICE ON STATE PROPERTY WITHOUT WRITTEN PERMISSION FROM THE DEPARTMENT.

5. IT SHALL BE THE CONTRACTOR'S RESPONSIBILITY TO VERIFY ALL DIMENSIONS AND CONDITIONS EXISTING IN THE FIELD PRIOR TO CONSTRUCTION AND ORDERING OF MATERIALS.

6. THE CONTRACTOR SHALL CONTACT THE DISTRICT ONE TRAFFIC CONTROL SUPERVISOR AT KALPANA.KANNAN-HOSADURGA@ILLINOIS.GOV A MINIMUM OF 72 HOURS IN ADVANCE OF BEGINNING WORK.

7. THE CONTRACTOR SHALL REQUEST AND GAIN THE APPROVAL FROM THE ILLINOIS DEPARTMENT OF TRANSPORTATION'S EXPRESSWAY TRAFFIC OPERATIONS ENGINEER AT WWW.IDOTLCS.COM TWENTY FOUR (24) HOURS IN ADVANCE OF ALL DAILY LANE, RAMP AND SHOULDER CLOSURES. THIS ADVANCE NOTIFICATION IS CALCULATED BASED ON WORKWEEK OF MONDAY THROUGH FRIDAY AND SHALL NOT INCLUDE WEEKENDS OR HOLIDAYS.

8. THESE PLANS HAVE BEEN PREPARED FROM NOTES RECEIVED FROM THE BUREAU OF MAINTENANCE.

9. THE CONTRACTOR SHALL BE REQUIRED TO PROVIDE ACCESS TO ABUTTING PROPERTY AT ALL TIMES DURING THE CONSTRUCTION OF THIS PROJECT.

10. DO NOT SCALE PLANS FOR CONSTRUCTION DIMENSIONS.

11. THE CONTRACTOR SHALL TAKE NECESSARY PRECAUTIONS TO INSURE THAT NO DEBRIS WILL ENDANGER OR INTERFERE WITH TRAFFIC ON THE ROADWAY BENEATH THE BRIDGE ACCORDING TO ARTICLE 107.09 OF THE STANDARD SPECIFICATIONS. THIS WORK WILL NOT BE PAID FOR SEPARATELY, BUT SHALL BE INCLUDED IN THE CONTRACT UNIT PRICE FOR THE APPROPRIATE PAY ITEM INVOLVED AND NO ADDITIONAL COMPENSATION WILL BE ALLOWED.

12. EXISTING PAVEMENT MARKINGS SHALL BE TEMPORARILY COVERED PRIOR TO APPLICATION OF THE DECK SURFACE TREATMENT, TO PREVENT THE MATERIAL FROM BEING APPLIED TO THE MARKINGS AND TO PROTECT THE REFLECTIVE PROPERTIES OF THE MARKINGS. THE TEMPORARY COVERING MATERIAL USED SHALL BE SUCH THAT IT WILL NOT AFFECT THE MARKING'S REFLECTIVITY WHEN REMOVED AFTER APPLICATION OF THE DECK SURFACE TREATMENT AND PRIOR TO OPENING TO TRAFFIC. COST INCLUDED WITH CONCRETE SEALER.

13. CONTRACTOR SHALL NOT BE ALLOWED TO PLACE/PARK ANY EQUIPMENT OR VEHICLES ON THE MOVABLE BRIDGE SECTIONS OF THE DRAW BRIDGES.

14. CONTRACTOR SHALL PROTECT THE STEEL JOINTS WHILE PERFORMING DECK SLAB REPAIR AT STRUCTURE NO: 016-2445. ANY DAMAGES DURING CONSTRUCTION SHALL BE REPAIRED OR REPLACED TO THE SATISFACTION OF THE ENGINEER. THIS WORK SHALL BE AT THE CONTRACTOR'S EXPENSE.

15. CONTRACTOR SHALL BE RESPONSIBLE FOR THE PROTECTION OF ALL UNDERGROUND OR SURFACE UTILITIES EVEN THOUGH THEY MAY NOT BE SHOWN ON THE PLANS. ANY UTILITY THAT IS DAMAGED DURING CONSTRUCTION SHALL BE REPAIRED OR REPLACED TO THE SATISFACTION OF THE ENGINEER. THIS WORK SHALL BE AT THE CONTRACTOR'S EXPENSE.

SUMMARY OF QUANTITIES			URBAN TOTAL QUANTITIES 100% STATE	CONSTRUCTION TYPE CODE																			
CODE NO	ITEM	UNIT		047 SN 016-0458 LOC 1	047 SN 016-0461 LOC 2	047 SN 016-1165 LOC 3	047 SN 016-1700 LOC 4	047 SN 016-1703 LOC 5	047 SN 016-1704 LOC 6	047 SN 016-1705 LOC 7	047 SN 016-1706 LOC 8	047 SN 016-1707 LOC 9	047 SN 016-1709 LOC 10	047 SN 016-1710 LOC 11	047 SN 016-1711 LOC 12	047 SN 016-1712 LOC 13	047 SN 016-1713 LOC 14	047 SN 016-1714 LOC 15	047 SN 016-1715 LOC 16	047 SN 016-1716 LOC 17	047 SN 016-1718 LOC 18	047 SN 016-2445 LOC 19	047 SN 016-2535 LOC 20
50157300	PROTECTIVE SHIELD	SQ YD	115	115																			
52000005	PREFORMED JOINT SEAL 1"	FOOT	369	369																			
67100100	MOBILIZATION	L SUM	1	0.05	0.05	0.05	0.05	0.05	0.05	0.05	0.05	0.05	0.05	0.05	0.05	0.05	0.05	0.05	0.05	0.05	0.05	0.05	0.05
70102620	TRAFFIC CONTROL AND PROTECTION, STANDARD 701501	L SUM	1									0.25	0.25		0.25		0.25						
70102622	TRAFFIC CONTROL AND PROTECTION, STANDARD 701502	L SUM	1									1											
70102625	TRAFFIC CONTROL AND PROTECTION, STANDARD 701606	L SUM	1			0.33	0.33													0.34			
70102630	TRAFFIC CONTROL AND PROTECTION, STANDARD 701601	L SUM	1	1																			
70102635	TRAFFIC CONTROL AND PROTECTION, STANDARD 701701	L SUM	1			0.25	0.25						0.25							0.25			
70102640	TRAFFIC CONTROL AND PROTECTION, STANDARD 701801	L SUM	1			0.14	0.14					0.14	0.14		0.14		0.15			0.15			
70200100	NIGHTTIME WORK ZONE LIGHTING	L SUM	1	0.07	0.07			0.07	0.07	0.08	0.08			0.08		0.08		0.08	0.08		0.08	0.08	0.08
X5870015	BRIDGE DECK CONCRETE SEALER	SQ FT	780706	45595	208365	24578	23842	30240	32959	107982	7917	32336	16624	19473	12494	18332	21140	26073	79655	41674	5433	12248	13746
X6430210	REMOVE AND REINSTALL IMPACT ATTENUATORS	EACH	1	1																			
X6700407	ENGINEER'S FIELD OFFICE, TYPE A (D1)	CAL MO	12	0.6	0.6	0.6	0.6	0.6	0.6	0.6	0.6	0.6	0.6	0.6	0.6	0.6	0.6	0.6	0.6	0.6	0.6	0.6	0.6

FILE NAME = pw:\\Ildot-pw.bentley.com:PWIDOT\Documents\IDOT Offices\District 1\Projects\Circle Int\CADData\Design\s-str-SOQ.dgn	USER NAME = naveed.hassan	DESIGNED -	REVISED -
		DRAWN -	REVISED -
	PLOT SCALE = 100.0304 ' / in.	CHECKED -	REVISED -
	PLOT DATE = 12/20/2022	DATE -	REVISED -

STATE OF ILLINOIS
DEPARTMENT OF TRANSPORTATION

SUMMARY OF QUANTITIES

SCALE: | SHEET NO. OF SHEETS | STA. TO STA.

VAR. RTE.	SECTION	COUNTY	TOTAL SHEETS	SHEET NO.
VAR.	FAI VARIOUS BRIDGE SEALING	COOK	75	3
		CONTRACT NO. 62U35		

FED. ROAD DIST. NO. 1 | ILLINOIS | FED. AID PROJECT

REV-SEP

SUMMARY OF QUANTITIES

CODE NO	ITEM	UNIT	URBAN TOTAL QUANTITIES 100% STATE	CONSTRUCTION TYPE CODE 047 SN 016-0458 LOC 1	047 SN 016-0461 LOC 2	047 SN 016-1165 LOC 3	047 SN 016-1700 LOC 4	047 SN 016-1703 LOC 5	047 SN 016-1704 LOC 6	047 SN 016-1705 LOC 7	047 SN 016-1706 LOC 8	047 SN 016-1707 LOC 9	047 SN 016-1709 LOC 10	047 SN 016-1710 LOC 11	047 SN 016-1711 LOC 12	047 SN 016-1712 LOC 13	047 SN 016-1713 LOC 14	047 SN 016-1714 LOC 15	047 SN 016-1715 LOC 16	047 SN 016-1716 LOC 17	047 SN 016-1718 LOC 18	047 SN 016-2445 LOC 19	047 SN 016-2535 LOC 20
X7011015	TRAFFIC CONTROL AND PROTECTION	L SUM	1	0.07	0.07			0.07	0.07	0.08	0.08			0.08		0.08		0.08	0.08		0.08	0.08	0.08
	(EXPRESSWAYS)																						
Z0015550	DEBRIS REMOVAL	CU YD	2.1																			2.1	
Z0016200	DECK SLAB REPAIR (PARTIAL)	SQ YD	16																			16	
Ø Z0076604	TRAINEES - TRAINING PROGRAM GRADUATE	HOURS	500	500																			

Ø 0042

FILE NAME =	USER NAME = naveed.hasson	DESIGNED -	REVISED -
pw:\\idot-pw.bentley.com:PWIDOT\Documents\IDOT Offices\District 1\Projects\Circle Int\CADdata\Design-sht-S00.dgn		DRAWN -	REVISED -
	PLOT SCALE = 100.0205 ' / in.	CHECKED -	REVISED -
	PLOT DATE = 12/20/2022	DATE -	REVISED -

STATE OF ILLINOIS
DEPARTMENT OF TRANSPORTATION

SUMMARY OF QUANTITIES

SCALE: | SHEET NO. OF SHEETS | STA. TO STA.

VAR. RTE.	SECTION	COUNTY	TOTAL SHEETS	SHEET NO.
VAR.	FAI VARIOUS BRIDGE SEALING	COOK	75	4
		CONTRACT NO. 62U35		
FED. ROAD DIST. NO. 1	ILLINOIS	FED. AID PROJECT		

REV-SEP

LOCATION	STRUCTURE NUMBER	COUNTY	BRIDGE DECK CONCRETE CRACK SEALER (S.F.)	BRIDGE DECK JOINT REPAIR	BRIDGE DECK PATCHING/CLEANING	TRAFFIC CONTROL AND PROTECTION, STANDARD							
						701456	701501	701502	701601	701606	701701	701801	TRAFFIC CONTROL & PROTECTION EXPRESSWAYS (SPECIAL)
1	016-0458	COOK	45,595	X		X			X				X
2	016-0461	COOK	208,365										X
3	016-1165	COOK	24,578							X	X	X	
4	016-1700	COOK	23,842							X	X	X	
5	016-1703	COOK	30,240										X
6	016-1704	COOK	32,959										X
7	016-1705	COOK	107,982										X
8	016-1706	COOK	7,917										X
9	016-1707	COOK	32,336				X	X				X	
10	016-1709	COOK	16,624				X				X	X	
11	016-1710	COOK	19,473										X
12	016-1711	COOK	12,494				X					X	
13	016-1712	COOK	18,332										X
14	016-1713	COOK	21,140				X					X	
15	016-1714	COOK	26,073										X
16	016-1715	COOK	79,655										X
17	016-1716	COOK	41,674							X	X	X	
18	016-1718	COOK	5,433										X
19	016-2445	COOK	12,248		X								X
20	016-2535	COOK	13,746										X

N

1

LOCATION 20:
ENTRANCE RAMP FROM TAYLOR STREET
TO I-90/94 NB
CITY OF CHICAGO
SN: 016-2535
ADT = 3,700
SPEED LIMIT = 30 MPH

LOCATION 1:
IDA B. WELLS DR. OVER
S. WACKER DR. & S. FRANKLIN ST.
CITY OF CHICAGO
SN: 016-0458
ADT = 74,700
SPEED LIMIT = 45 MPH

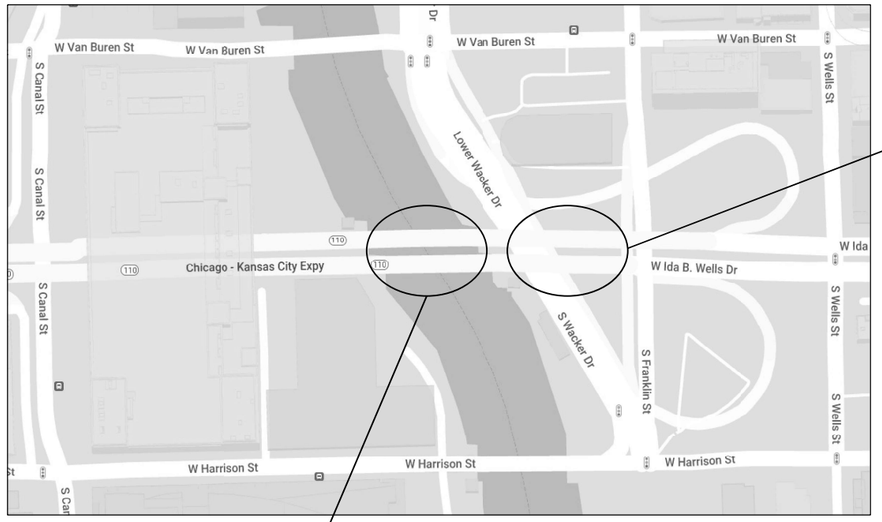

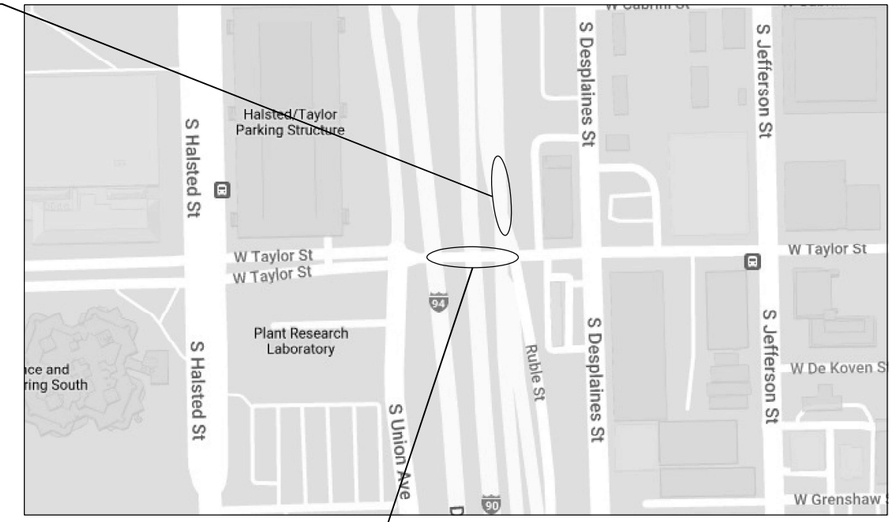

LOCATION 19:
CONGRESS PARKWAY OVER
SOUTH BRANCH CHICAGO RIVER
CITY OF CHICAGO
SN: 016-2445
ADT = 74,700
SPEED LIMIT = 45 MPH

LOCATION 3:
TAYLOR STREET OVER
FAI ROUTE 90 / 94 (DAN RYAN EXPRESSWAY)
CITY OF CHICAGO
SN: 016-1165
ADT = 13,200
SPEED LIMIT = 30 MPH

LOCATION 4:
W. MONROE ST. OVER I-90/94
CITY OF CHICAGO
SN: 016-1700
ADT = 11,400
SPEED LIMIT = 35 MPH

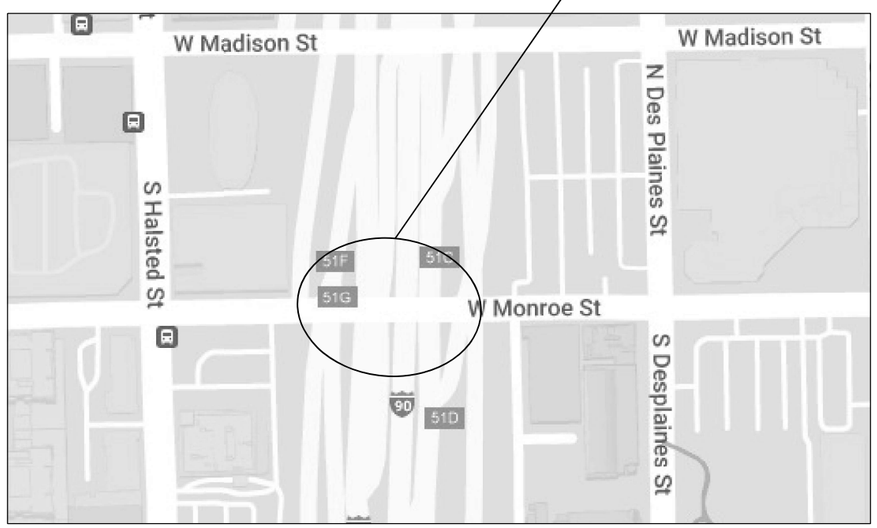

LOCATION 10:
MORGAN ST. OVER
I-290
CITY OF CHICAGO
SN: 016-1709
ADT = 4,100
SPEED LIMIT = 35 MPH

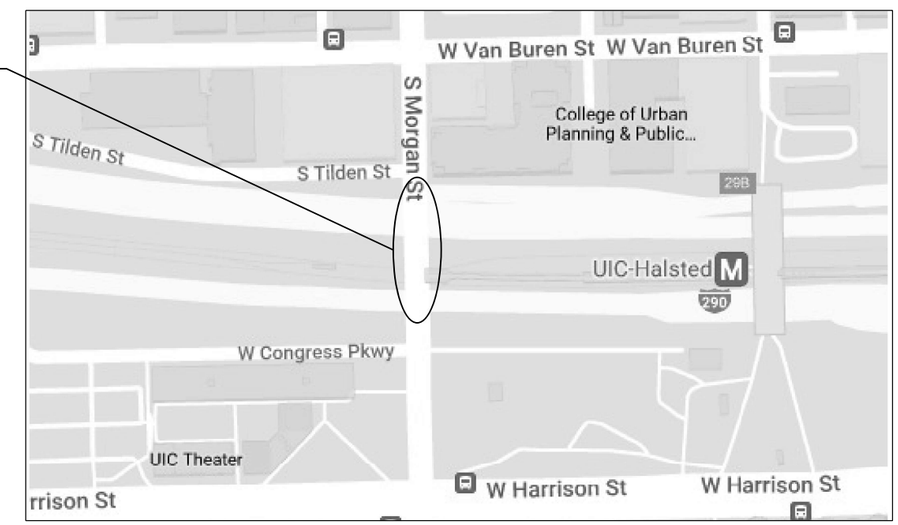

MODEL: Default
FILE NAME: pw:\\ildot-pw.bentley.com:PWIDOT\Documents\IDOT Offices\District 1\Projects\Circle Int\CADData\Design-Int-Location.dgn

USER NAME = naveed.hassan	DESIGNED -	REVISED -	STATE OF ILLINOIS DEPARTMENT OF TRANSPORTATION
	DRAWN -	REVISED -	
PLOT SCALE = 99.9992 ' / in.	CHECKED -	REVISED -	
PLOT DATE = 12/19/2022	DATE -	REVISED -	

LOCATION MAP

SCALE: | SHEET OF SHEETS | STA. TO STA.

VAR. RTE.	SECTION	COUNTY	TOTAL SHEETS	SHEET NO.
VAR.	FAI VARIOUS BRIDGE SEALING	COOK	75	6
		CONTRACT NO. 62U35		
	ILLINOIS	FED. AID PROJECT		

LOCATION 16:
RAMP FROM WB I-290 TO
SB I-90/94
CITY OF CHICAGO
SN: 016-1715
ADT = 8,100
SPEED LIMIT = 30 MPH

LOCATION 9:
VAN BUREN ST. OVER
I-90/94
CITY OF CHICAGO
SN: 016-1707
ADT = 6,550
SPEED LIMIT = 35 MPH

LOCATION 8:
WB IDA B. WELLS DR. TO
NB I-90/94
CITY OF CHICAGO
SN: 016-1706
ADT = 8,100
SPEED LIMIT = 30 MPH

N

LOCATION 18:
RAMP FROM TAYLOR ST.
EXIT RAMP OVER I-290 & CTA
CITY OF CHICAGO
SN: 016-1718
ADT = 8,100
SPEED LIMIT = 30 MPH

LOCATION 6:
EB I-290 (CONGRESS) OVER
I-90/I-94
CITY OF CHICAGO
SN: 016-1704
ADT = 68,300
SPEED LIMIT = 45 MPH

LOCATION 5:
WB I-290 (CONGRESS) OVER
I-90/I-94
CITY OF CHICAGO
SN: 016-1703
ADT = 68,300
SPEED LIMIT = 45 MPH

LOCATION 2:
I-290 (CONGRESS) VIADUCT OVER
DES PLAINES ST. TO CANAL ST.
CITY OF CHICAGO
SN: 016-0461
ADT = 68,300
SPEED LIMIT = 45 MPH

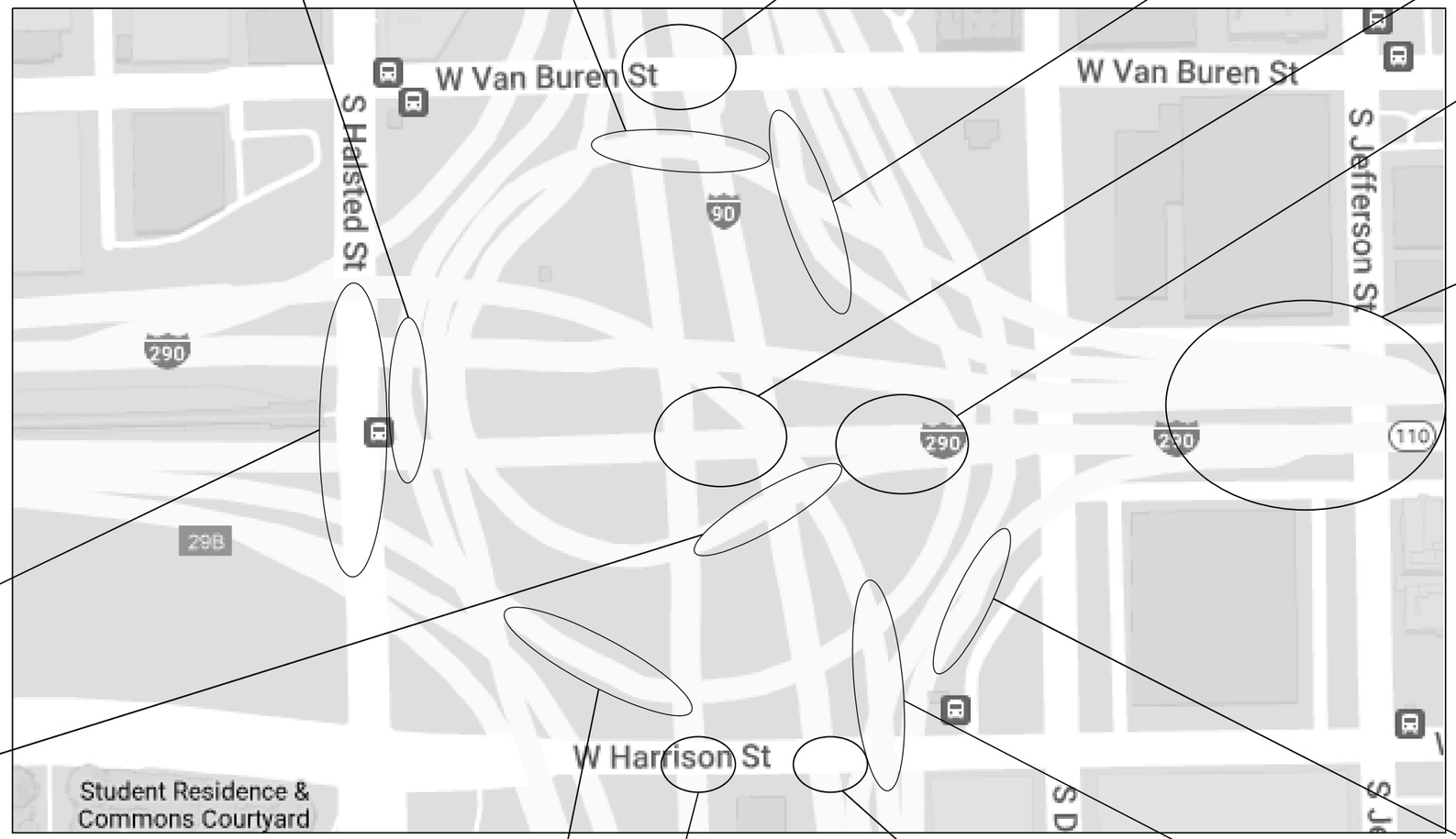

LOCATION 17:
S. HALSTED ST OVER I-290
CITY OF CHICAGO
SN: 016-1716
ADT = 21,600
SPEED LIMIT = 35 MPH

LOCATION 15:
RAMP FROM SB I-90/94
TO I-290 EB
CITY OF CHICAGO
SN: 016-1714
ADT = 7,200
SPEED LIMIT = 30 MPH

LOCATION 11:
RAMP FROM NB I-90/94 TO EB I-290
CITY OF CHICAGO
SN: 016-1710
ADT = 6,000
SPEED LIMIT = 30 MPH

LOCATION 13:
RAMP FROM I-290 EB TO NB I-90/94
CITY OF CHICAGO
SN: 016-1712
ADT = 31,300
SPEED LIMIT = 30 MPH

LOCATION 7:
RAMP FROM NB I-90/94
TO WB I-290
CITY OF CHICAGO
SN: 016-1705
ADT = 53,600
SPEED LIMIT = 30 MPH

LOCATION 14:
HARRISON ST. OVER SB I-90/94
CITY OF CHICAGO
SN: 016-1713
ADT = 10,200
SPEED LIMIT = 35 MPH

LOCATION 12:
HARRISON ST. OVER NB I-90/94
CITY OF CHICAGO
SN: 016-1711
ADT = 10,200
SPEED LIMIT = 35 MPH

MODEL: Default
FILE NAME: pw:\\ildot-pw.bentley.com:PWIDOT\Documents\IDOT Offices\District 1\Projects\Circle Int\CADData\Design-Sht-Location\msp.dgn

USER NAME = naveed.hassan	DESIGNED -	REVISED -	
	DRAWN -	REVISED -	
PLOT SCALE = 100.0000 ' / in.	CHECKED -	REVISED -	
PLOT DATE = 12/19/2022	DATE -	REVISED -	

STATE OF ILLINOIS
DEPARTMENT OF TRANSPORTATION

LOCATION MAP

SCALE: SHEET OF SHEETS STA. TO STA.

VAR. RTE.	SECTION	COUNTY	TOTAL SHEETS	SHEET NO.
VAR.	FAI VARIOUS BRIDGE SEALING	COOK	75	7
		CONTRACT NO. 62U35		
		ILLINOIS FED. AID PROJECT		

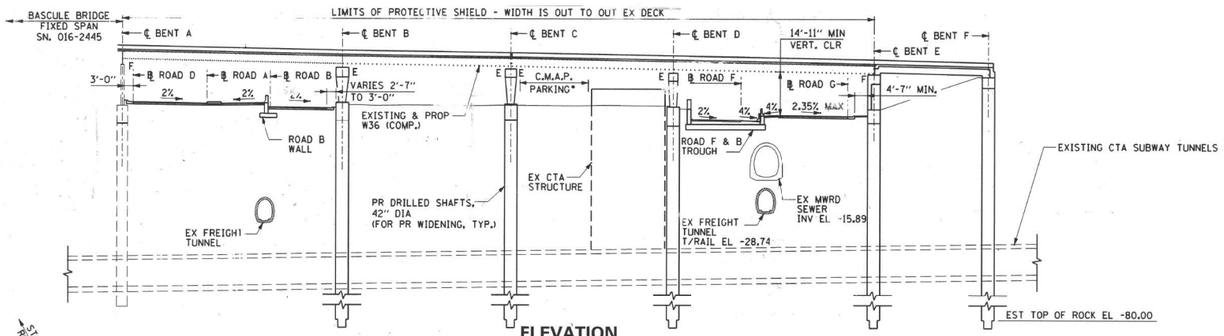

ELEVATION

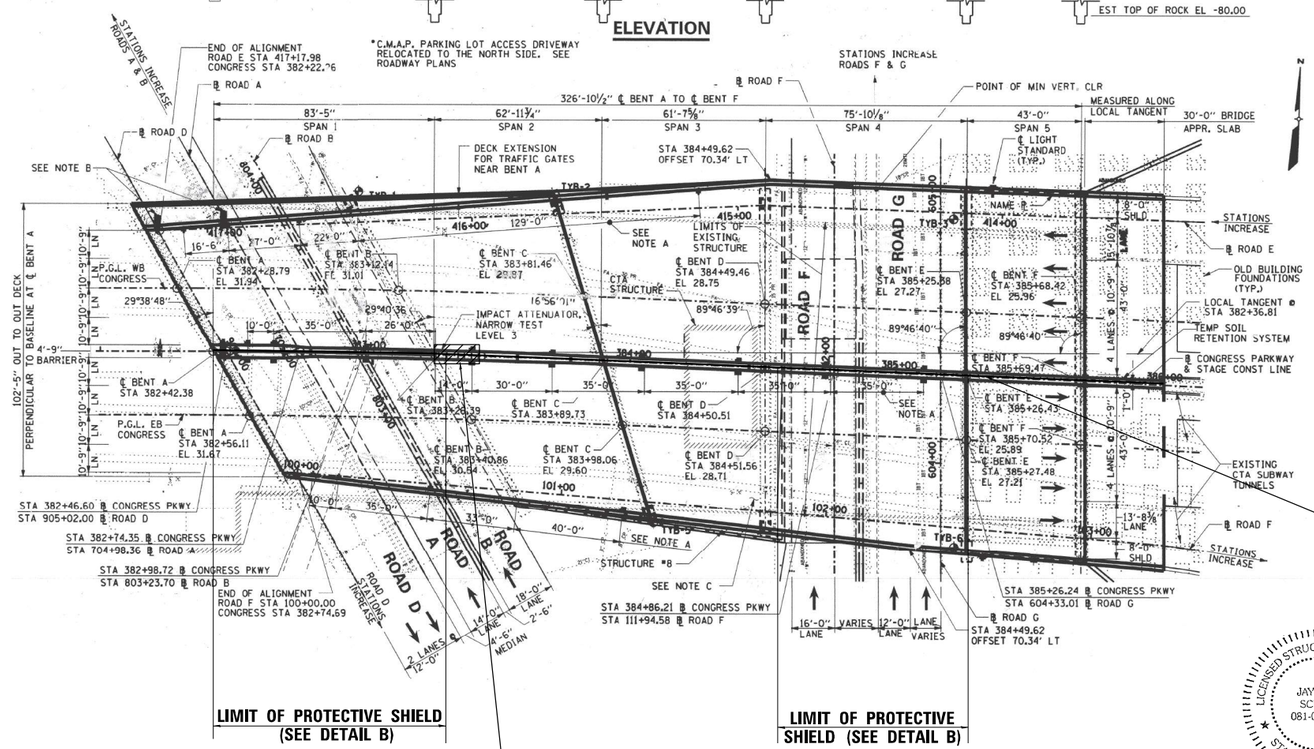

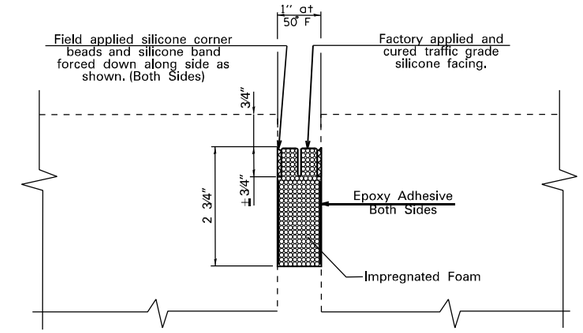

PREFORMED JOINT SEAL 1"

DETAIL A

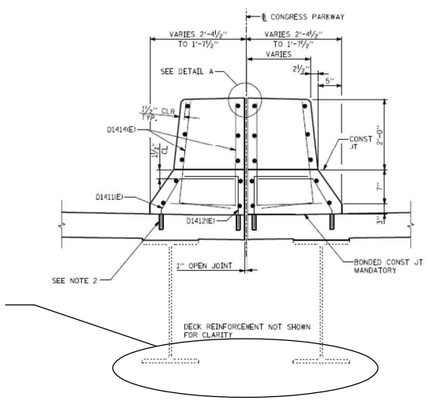

LOCATION OF PROTECTIVE SHIELD

PREFORMED JOINT SEAL 1" (SEE DETAIL A)

DETAIL B

EXISTING MEDIAN BARRIER

LICENSED STRUCTURAL ENGINEER
JAYME F. SCHIFF
081-005540
STATE OF ILLINOIS

EXPIRES 11-30-2024

Jayme F. Schiff

(TOTAL) BILL OF MATERIAL		
DESCRIPTION	**UNIT**	**TOTAL QUANTITIES**
PROTECTIVE SHIELD	SQ YD	115
PREFORMED JOINT SEAL 1"	FOOT	369
BRIDGE DECK CONCRETE SEALER	SQ FT	780706
DEBRIS REMOVAL	CU YD	2.1
DECK SLAB REPAIR (PARTIAL)	SQ YD	16

NOTES

1. PROTECTIVE SHIELD SHALL BE USED WHERE BRIDGE IS OVER THE ROADWAY TO PROTECT PASSING VEHICLES & PEDESTRIANS.

MODEL: Default
FILE NAME: pw:\\ildot-pw.bentley.com:PWIDOT\Documents\DOT Offices\District 1\Projects\Circle Int\CAD\Data\Design\ctb-plan.dgn

USER NAME = naveed.hassan	DESIGNED -	REVISED -	
	DRAWN -	REVISED -	
PLOT SCALE = 100.0093 ' / in.	CHECKED -	REVISED -	
PLOT DATE = 2/2/2023	DATE -	REVISED -	

STATE OF ILLINOIS
DEPARTMENT OF TRANSPORTATION

LOCATION 1: IDA B. WELLS DR. OVER S. WACKER DR. & S. FRANKLIN ST. (SN 016-0458)
EXISTING PLAN & ELEVATION

SCALE: | SHEET OF SHEETS | STA. TO STA.

VAR. RTE.	SECTION	COUNTY	TOTAL SHEETS	SHEET NO.
VAR.	FAI VARIOUS BRIDGE SEALING	COOK	75	8
		CONTRACT NO. 62U35		
	ILLINOIS	FED. AID PROJECT		

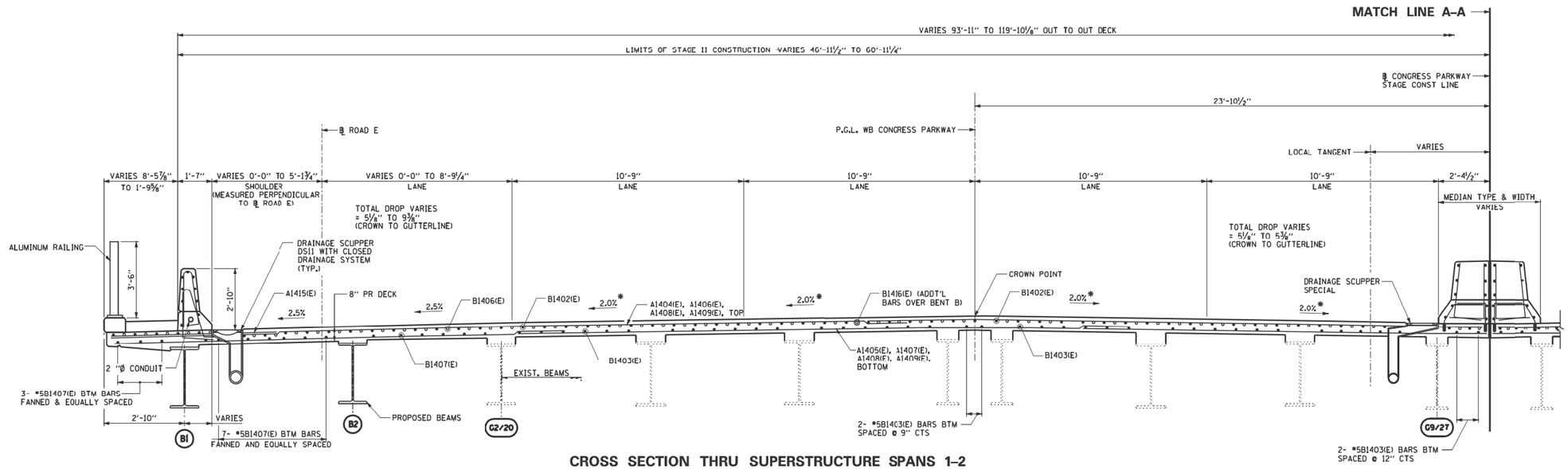

CROSS SECTION THRU SUPERSTRUCTURE SPANS 1–2

(LOOKING EAST)

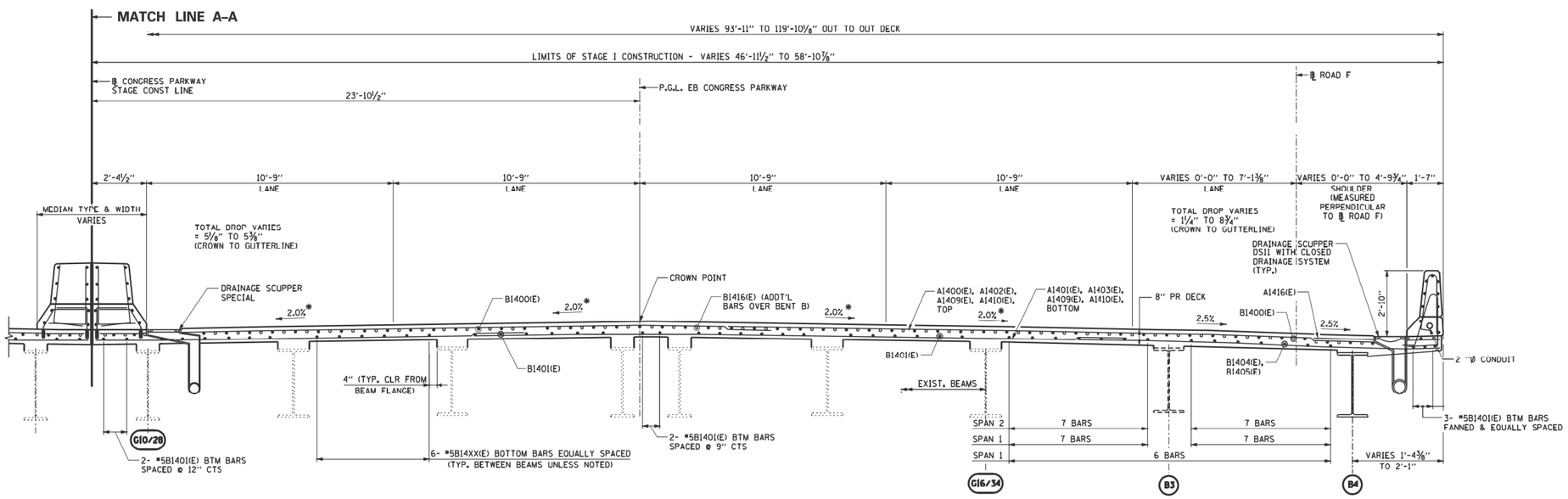

FOR INFORMATION ONLY

USER NAME = naveed.hassan	DESIGNED -	REVISED -	
	DRAWN -	REVISED -	
PLOT SCALE = 100.0000 ' / in.	CHECKED -	REVISED -	
PLOT DATE = 12/19/2022	DATE -	REVISED -	

STATE OF ILLINOIS
DEPARTMENT OF TRANSPORTATION

LOCATION 1: IDA B. WELLS DR. OVER S. WACKER DR. & S. FRANKLIN ST. (SN 016–0458)
EXISTING CROSS SECTIONS (1 OF 3)

SCALE: | SHEET OF SHEETS | STA. TO STA.

VAR. RTE.	SECTION	COUNTY	TOTAL SHEETS	SHEET NO.
VAR.	FAI VARIOUS BRIDGE SEALING	COOK	75	9
		CONTRACT NO. 62U35		
		ILLINOIS	FED. AID PROJECT	

MODEL: Default
FILE NAME: pw:\\ildot-pw.bentley.com:PWIDOT\Documents\IDOT Offices\District 1\Projects\Circle Int\CADData\Design-Int-Rdwy.dgn

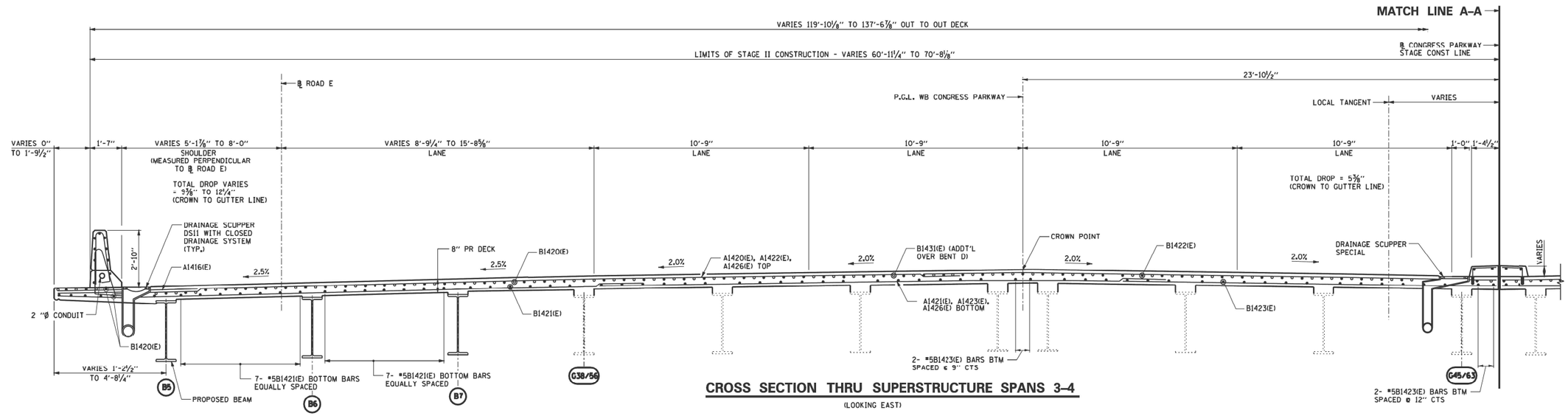

CROSS SECTION THRU SUPERSTRUCTURE SPANS 3-4

(LOOKING EAST)

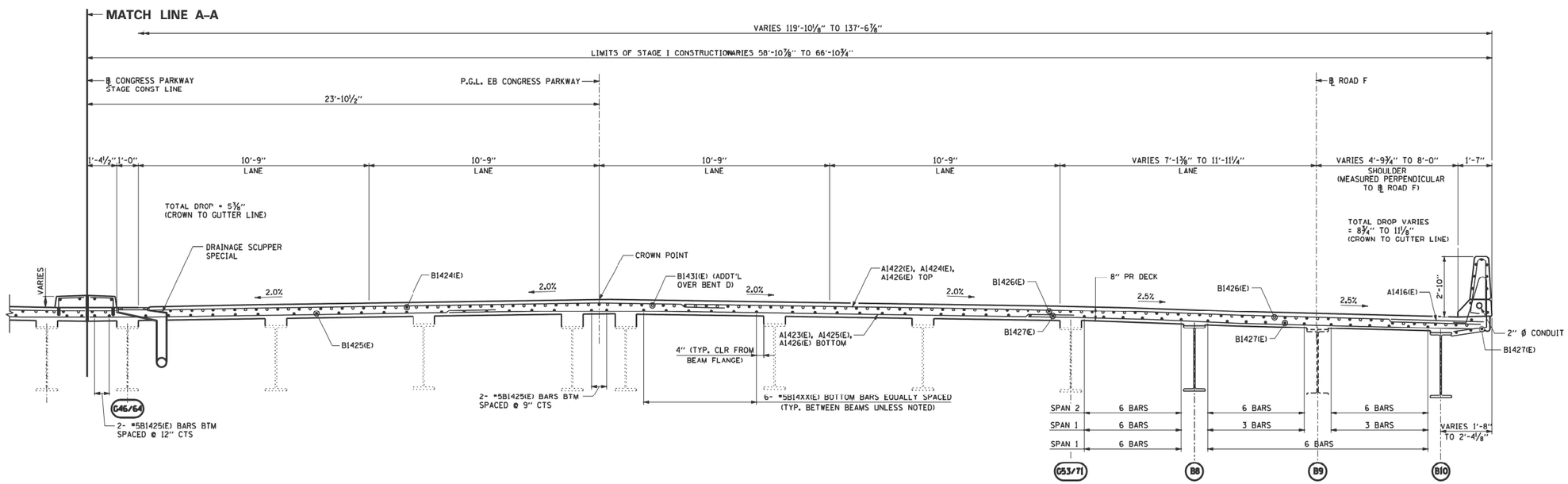

CROSS SECTION THRU SUPERSTRUCTURE SPANS 3-4

(LOOKING EAST)

FOR INFORMATION ONLY

MODEL: Default
FILE NAME: pw:\\ildot-pw.bentley.com:PWIDOT\Documents\IDOT Offices\District 1\Projects\Circle Int\CADData\Design-Site-Rdwy.dgn

USER NAME = naveed.hassan	DESIGNED -	REVISED -	STATE OF ILLINOIS DEPARTMENT OF TRANSPORTATION	LOCATION 1: IDA B. WELLS DR. OVER S. WACKER DR. & S. FRANKLIN ST. (SN 016-0458) EXISTING CROSS SECTIONS (2 OF 3)
	DRAWN -	REVISED -		
PLOT SCALE = 100.0000 ' / in.	CHECKED -	REVISED -		
PLOT DATE = 12/19/2022	DATE -	REVISED -		SCALE: SHEET OF SHEETS STA. TO STA.

VAR. RTE.	SECTION	COUNTY	TOTAL SHEETS	SHEET NO.
VAR.	FAI VARIOUS BRIDGE SEALING	COOK	75	10
		CONTRACT NO. 62U35		
		ILLINOIS	FED. AID PROJECT	

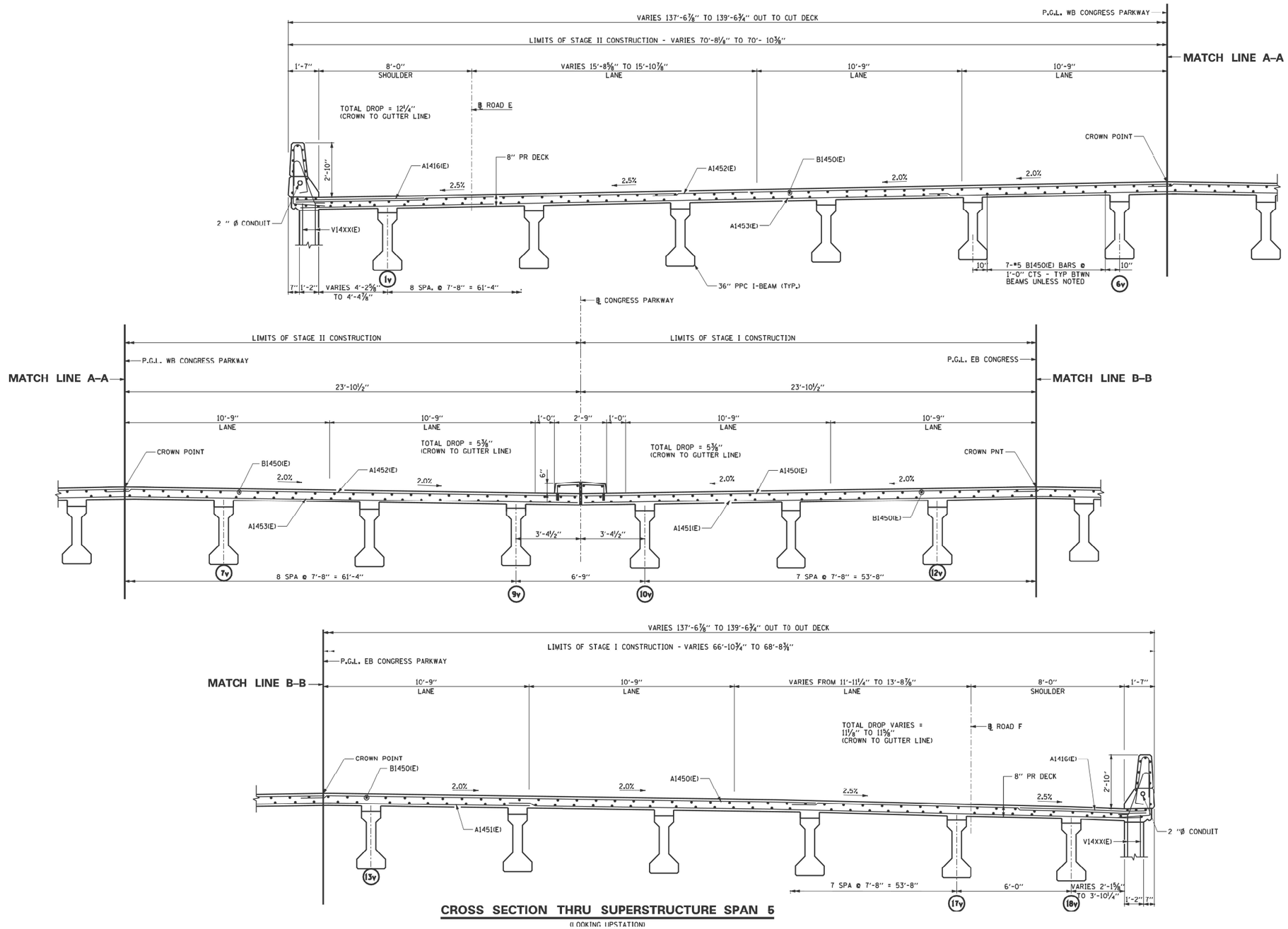

CROSS SECTION THRU SUPERSTRUCTURE SPAN 5

(LOOKING UPSTATION)

FOR INFORMATION ONLY

MODEL: Default
FILE NAME: pw:\\ildot-pw.bentley.com:PWIDOT\Documents\IDOT Offices\District 1\Projects\Circle Int\CADData\Design-Site-Rdwy.dgn

USER NAME = naveed.hassan	DESIGNED -	REVISED -	STATE OF ILLINOIS DEPARTMENT OF TRANSPORTATION
	DRAWN -	REVISED -	
PLOT SCALE = 100.0000 ' / in.	CHECKED -	REVISED -	
PLOT DATE = 12/19/2022	DATE -	REVISED -	

LOCATION 1: IDA B. WELLS DR. OVER S. WACKER DR. & S. FRANKLIN ST. (SN 016–0458)
EXISTING CROSS SECTIONS (3 OF 3)

SCALE: | SHEET OF SHEETS | STA. TO STA.

VAR. RTE.	SECTION	COUNTY	TOTAL SHEETS	SHEET NO.
VAR.	FAI VARIOUS BRIDGE SEALING	COOK	75	11
		CONTRACT NO. 62U35		
		ILLINOIS	FED. AID PROJECT	

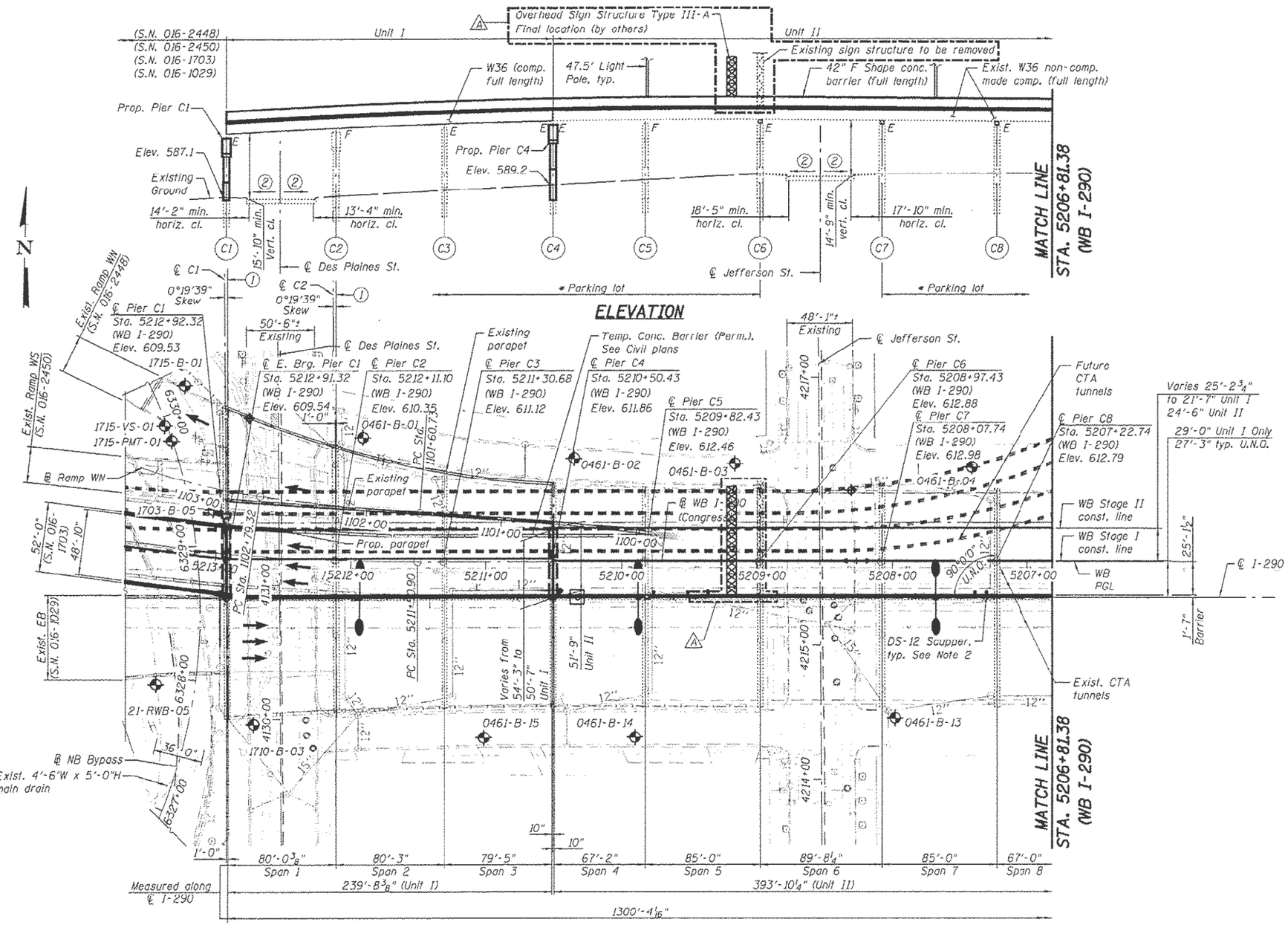

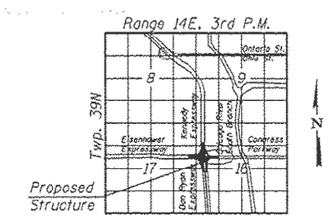

LOCATION SKETCH

GENERAL PLAN & ELEVATION - I
I-290 (CONGRESS) VIADUCT OVER
DES PLAINES ST. TO CANAL ST.
F.A.I. ROUTE 90/94/290
SECTION 2014-001 R&B (EB),
2014-004 R&B (WB)
COOK COUNTY
STATION 5165+03.09
STRUCTURE NO. 016-0461

FOR INFORMATION ONLY

USER NAME = naveed.hassan	DESIGNED -	REVISED -	STATE OF ILLINOIS DEPARTMENT OF TRANSPORTATION
	DRAWN -	REVISED -	
PLOT SCALE = 100.0000 ' / in.	CHECKED -	REVISED -	
PLOT DATE = 12/19/2022	DATE -	REVISED -	

LOCATION 2: I-290 (CONGRESS) VIADUCT OVER DES PLAINES ST. TO CANAL ST. (SN: 016-0461)
EXISTING PLAN & ELEVATION – WB (1 OF 6)

SCALE: | SHEET OF SHEETS | STA. TO STA.

VAR. RTE.	SECTION	COUNTY	TOTAL SHEETS	SHEET NO.
VAR.	FAI VARIOUS BRIDGE SEALING	COOK	75	12
		CONTRACT NO. 62U35		
	ILLINOIS	FED. AID PROJECT		

MODEL: Default
FILE NAME: pw:\\ildot-pw.bentley.com:PWIDOT\Documents\IDOT Offices\District 1\Projects\Circle Int\CADData\Design-sht-plan.cpn

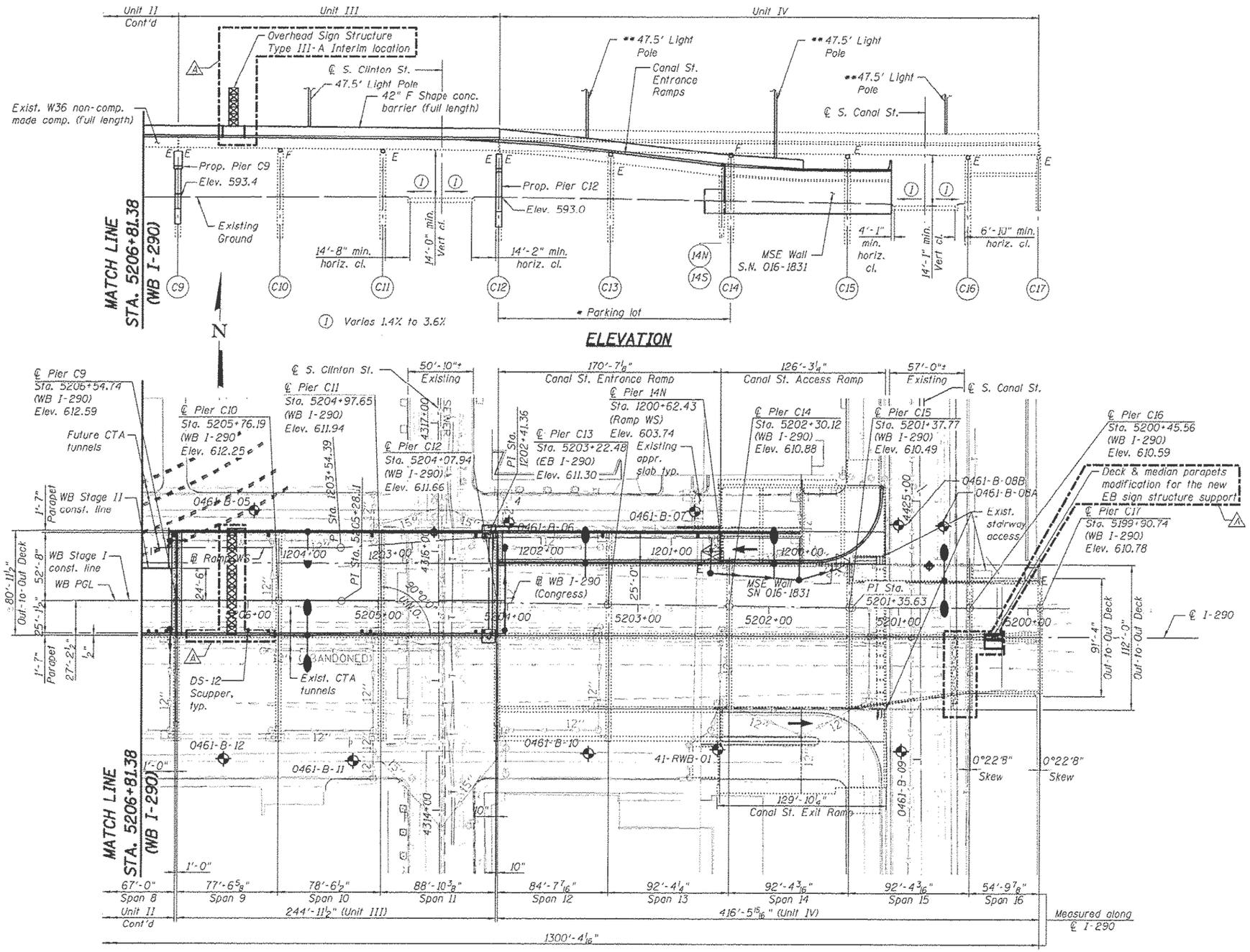

GENERAL PLAN & ELEVATION - II
I-290 (CONGRESS) VIADUCT OVER
DES PLAINES ST. TO CANAL ST.
F.A.I. ROUTE 90/94/290
SECTION 2014-001 R&B (EB),
2014-004 R&B (WB)
COOK COUNTY
STATION 5165+03.09
STRUCTURE NO. 016-0461

FOR INFORMATION ONLY

MODEL: Default
FILE NAME: pw:\\ildot-pw.bentley.com:PWIDOT\Documents\IDOT Offices\District 1\Projects\Circle Int\CADData\Design-Site-Plan.dgn

USER NAME = naveed.hassan	DESIGNED -	REVISED -	
	DRAWN -	REVISED -	
PLOT SCALE = 100.0000 ' / in.	CHECKED -	REVISED -	
PLOT DATE = 12/19/2022	DATE -	REVISED -	

STATE OF ILLINOIS
DEPARTMENT OF TRANSPORTATION

LOCATION 2: I-290 (CONGRESS) VIADUCT OVER DES PLAINES ST. TO CANAL ST. (SN: 016-0461)
EXISTING PLAN & ELEVATION - WB (2 OF 6)

SCALE: | SHEET OF SHEETS | STA. TO STA.

VAR. RTE.	SECTION	COUNTY	TOTAL SHEETS	SHEET NO.
VAR.	FAI VARIOUS BRIDGE SEALING	COOK	75	13
		CONTRACT NO. 62U35		
		ILLINOIS FED. AID PROJECT		

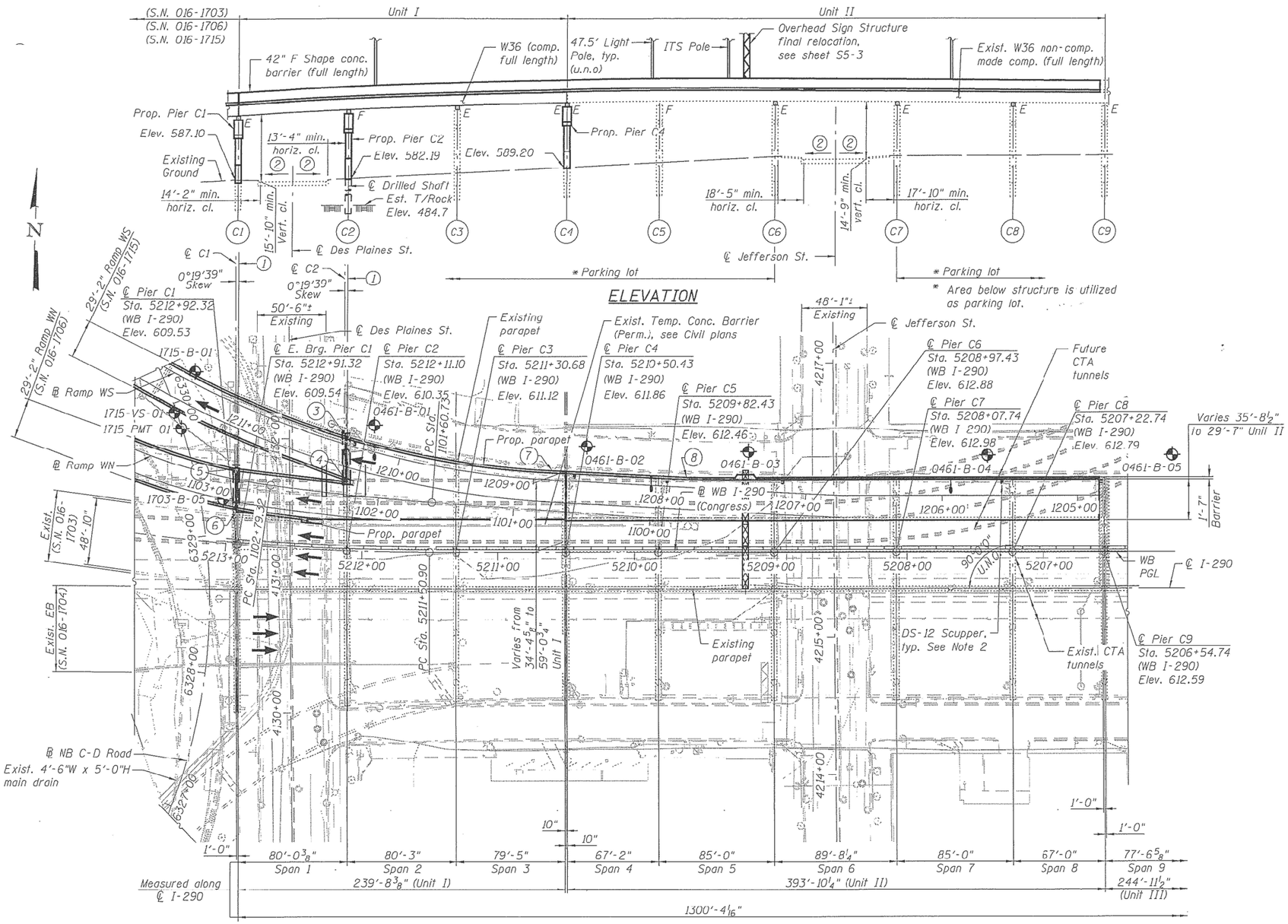

PLAN

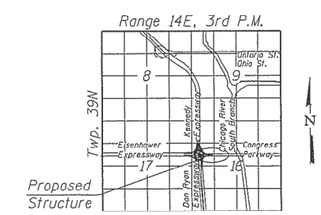

LOCATION SKETCH

GENERAL PLAN & ELEVATION
WB I-290 (CONGRESS) VIADUCT OVER
DES PLAINES ST. TO CANAL ST.
F.A.I. ROUTE 90/94/290
SECTION 2014-013 R&B-R,
COOK COUNTY
STATION 5165+03.09
STRUCTURE NO. 016-0461

FOR INFORMATION ONLY

MODEL: Default
FILE NAME: pw:\\ildot-pw.bentley.com:PWIDOT\Documents\IDOT Offices\District 1\Projects\Circle Int\CAD\Data\Design-Sht-Ann.dgn

USER NAME = naveed.hassan	DESIGNED -	REVISED -	
	DRAWN -	REVISED -	
PLOT SCALE = 100.0000 ' / in.	CHECKED -	REVISED -	
PLOT DATE = 12/19/2022	DATE -	REVISED -	

STATE OF ILLINOIS
DEPARTMENT OF TRANSPORTATION

LOCATION 2: I-290 (CONGRESS) VIADUCT OVER DES PLAINES ST. TO CANAL ST. (SN: 016-0461)
EXISTING PLAN & ELEVATION – WB RAMP (3 OF 6)

SCALE: | SHEET OF SHEETS | STA. TO STA.

VAR. RTE.	SECTION	COUNTY	TOTAL SHEETS	SHEET NO.
VAR.	FAI VARIOUS BRIDGE SEALING	COOK	75	14
		CONTRACT NO. 62U35		
	ILLINOIS	FED. AID PROJECT		

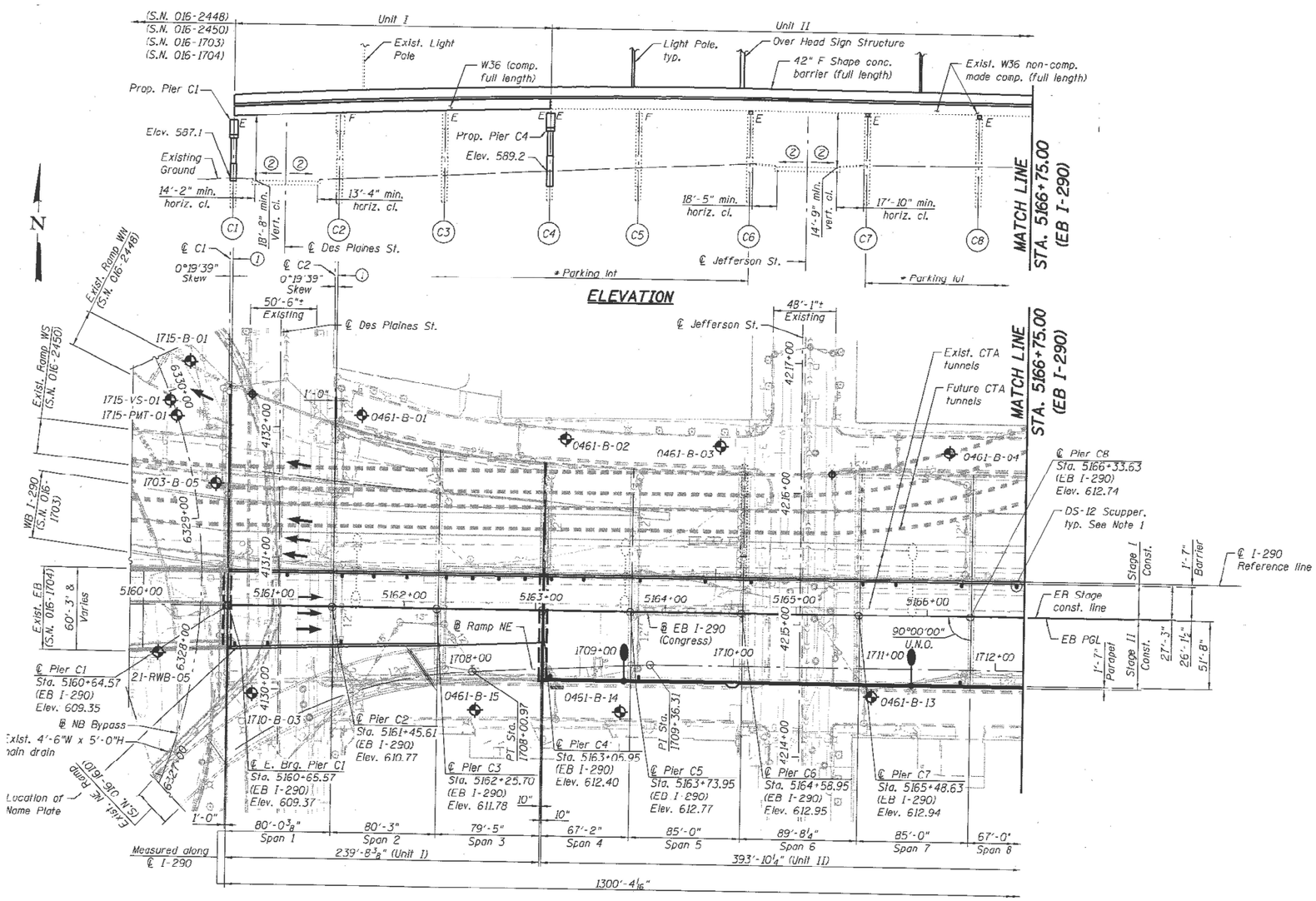

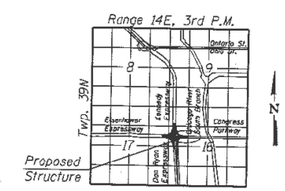

LOCATION SKETCH

GENERAL PLAN & ELEVATION - I
EB I-290 (CONGRESS) VIADUCT OVER
DES PLAINES ST. TO CANAL ST.
F.A.I. ROUTE 90/94/290
SECTION 2014-001 R&B (EB)
COOK COUNTY
STATION 5165+03.09
STRUCTURE NO. 016-0461

USER NAME = patbid | DESIGNED - PJL | REVISED -

FOR INFORMATION ONLY

USER NAME = naveed.hassan	DESIGNED -	REVISED -	STATE OF ILLINOIS DEPARTMENT OF TRANSPORTATION
	DRAWN -	REVISED -	
PLOT SCALE = 100.0000 ' / in.	CHECKED -	REVISED -	
PLOT DATE = 12/19/2022	DATE -	REVISED -	

LOCATION 2: I-290 (CONGRESS) VIADUCT OVER DES PLAINES ST. TO CANAL ST. (SN: 016-0461)
EXISTING PLAN & ELEVATION – EB (4 OF 6)

SCALE: | SHEET OF SHEETS | STA. TO STA.

VAR. RTE.	SECTION	COUNTY	TOTAL SHEETS	SHEET NO.
VAR.	FAI VARIOUS BRIDGE SEALING	COOK	75	15
		CONTRACT NO. 62U35		
	ILLINOIS	FED. AID PROJECT		

MODEL: Default
FILE NAME: pw:\\ildot-pw.bentley.com:PWIDOT\Documents\IDOT Offices\District 1\Projects\Circle Int\CADData\Design-sht-4as.dgn

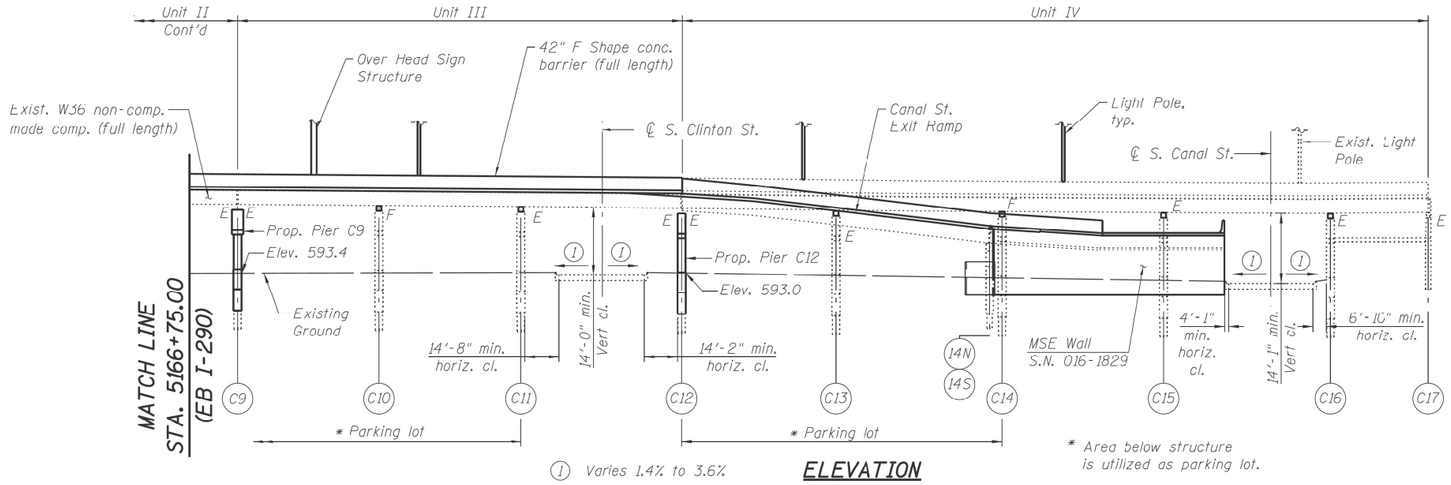

ELEVATION

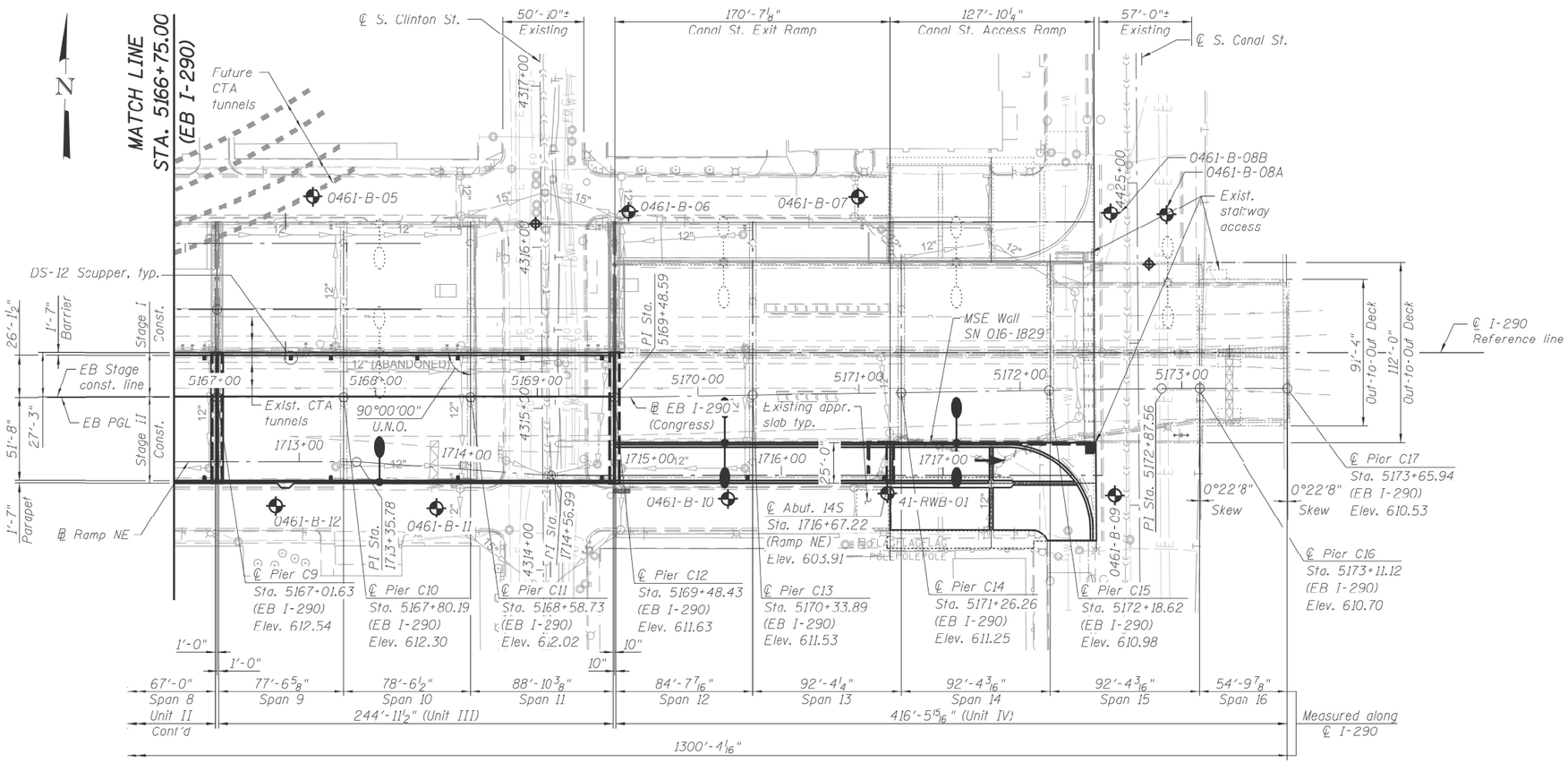

PLAN

FOR INFORMATION ONLY

GENERAL PLAN & ELEVATION - II
EB I-290 (CONGRESS) VIADUCT OVER
DES PLAINES ST. TO CANAL ST.
F.A.I. ROUTE 90/94/290
SECTION 2014-001 R&B (EB)
COOK COUNTY
STATION 5165+03.09
STRUCTURE NO. 016-0461

USER NAME = naveed.hassan	DESIGNED -	REVISED -	STATE OF ILLINOIS DEPARTMENT OF TRANSPORTATION
	DRAWN -	REVISED -	
PLOT SCALE = 100.0000 ' / in.	CHECKED -	REVISED -	
PLOT DATE = 12/19/2022	DATE -	REVISED -	

LOCATION 2: I-290 (CONGRESS) VIADUCT OVER DES PLAINES ST. TO CANAL ST. (SN: 016-0461)
EXISTING PLAN & ELEVATION – EB (5 OF 6)

SCALE: | SHEET OF SHEETS | STA. TO STA.

VAR. RTE.	SECTION	COUNTY	TOTAL SHEETS	SHEET NO.
VAR.	FAI VARIOUS BRIDGE SEALING	COOK	75	16
		CONTRACT NO. 62U35		
	ILLINOIS	FED. AID PROJECT		

MODEL: Default
FILE NAME: pw:\\ildot-pw.bentley.com:PWIDOT\Documents\IDOT Offices\District 1\Projects\Circle Int\CADData\Design-Bridge\

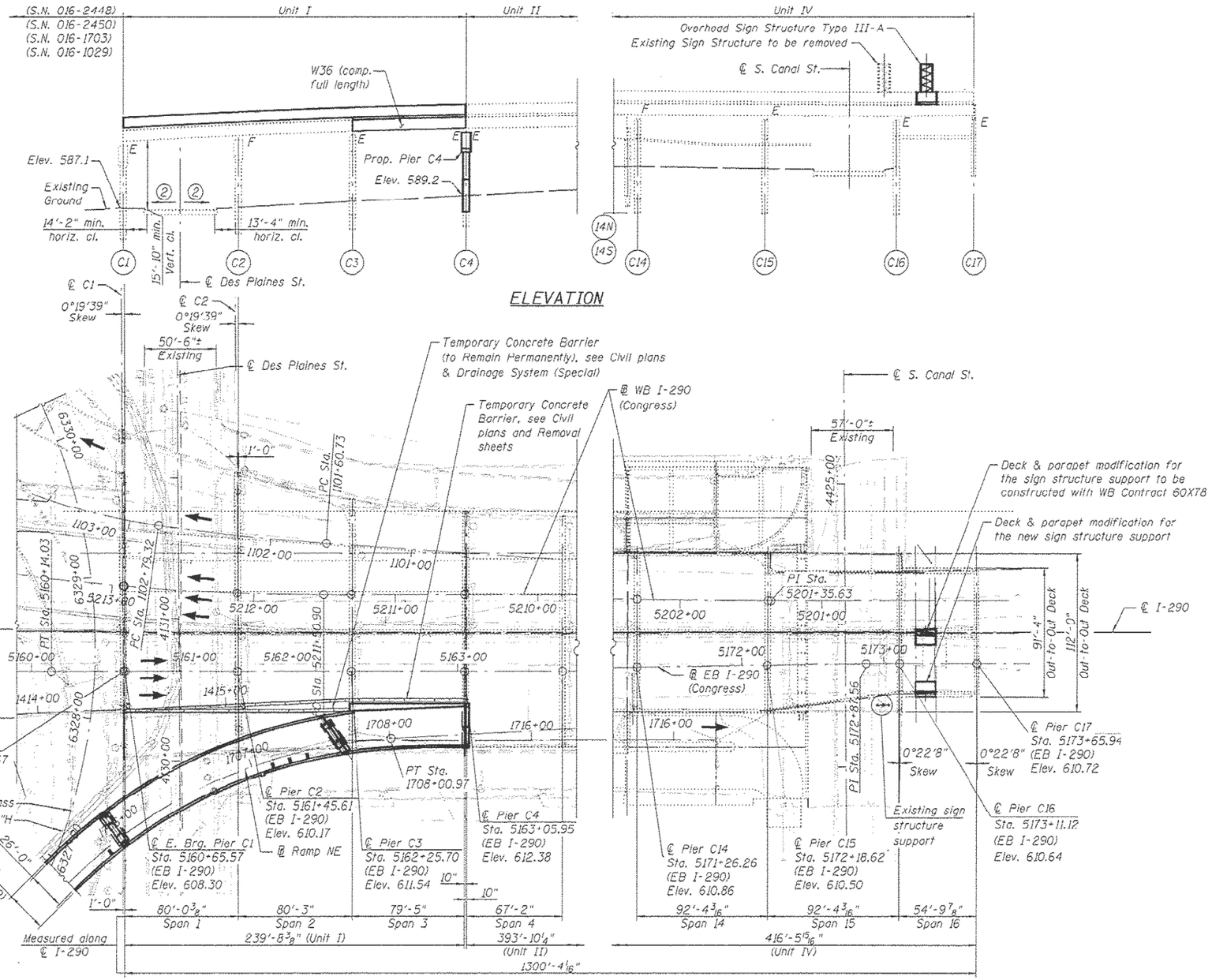

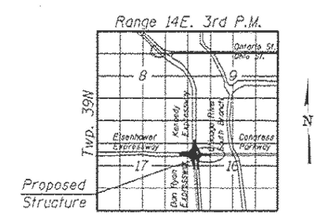

LOCATION SKETCH

GENERAL PLAN & ELEVATION
I-290 (CONGRESS) VIADUCT OVER
DES PLAINES ST. TO CANAL ST.
F.A.I. ROUTE 90/94/290
SECTION 2015-080 R&B
COOK COUNTY
STATION 5165+03.09
STRUCTURE NO. 016-0461

FOR INFORMATION ONLY

MODEL: Default
FILE NAME: pw:\\illinois-pw.bentley.com:PWIDOT\Documents\IDOT Offices\District 1\Projects\Circle Fab\CADData\Design-Int-Rev.dgn

USER NAME = naveed.hassan	DESIGNED -	REVISED -	STATE OF ILLINOIS DEPARTMENT OF TRANSPORTATION	LOCATION 2: I-290 (CONGRESS) VIADUCT OVER DES PLAINES ST. TO CANAL ST. (SN: 016-0461) EXISTING PLAN & ELEVATION – EB RAMP (6 OF 6)	VAR. RTE.	SECTION	COUNTY	TOTAL SHEETS	SHEET NO.
	DRAWN -	REVISED -			VAR.	FAI VARIOUS BRIDGE SEALING	COOK	75	17
PLOT SCALE = 100.0000 ' / in.	CHECKED -	REVISED -					CONTRACT NO. 62U35		
PLOT DATE = 12/19/2022	DATE -	REVISED -		SCALE: SHEET OF SHEETS STA. TO STA.		ILLINOIS	FED. AID PROJECT		

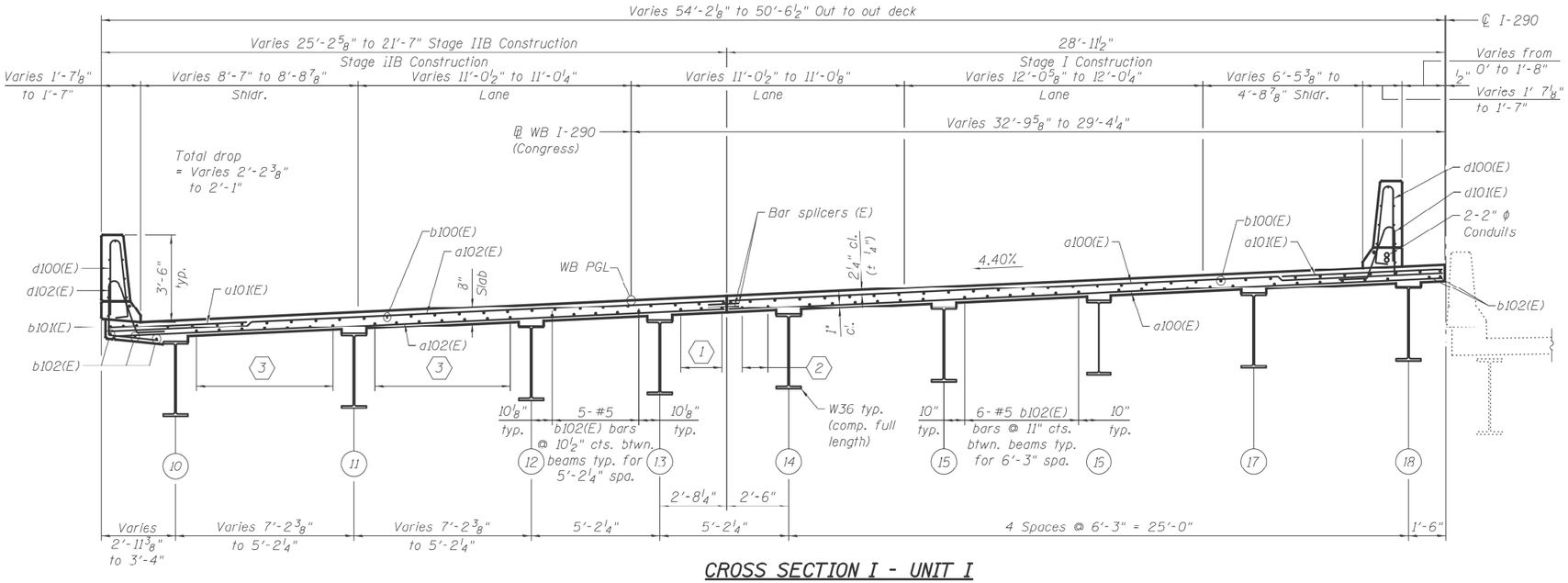

CROSS SECTION I - UNIT I

(Looking East)

Sta. 5212+92.22 to Sta. 5212+44.11

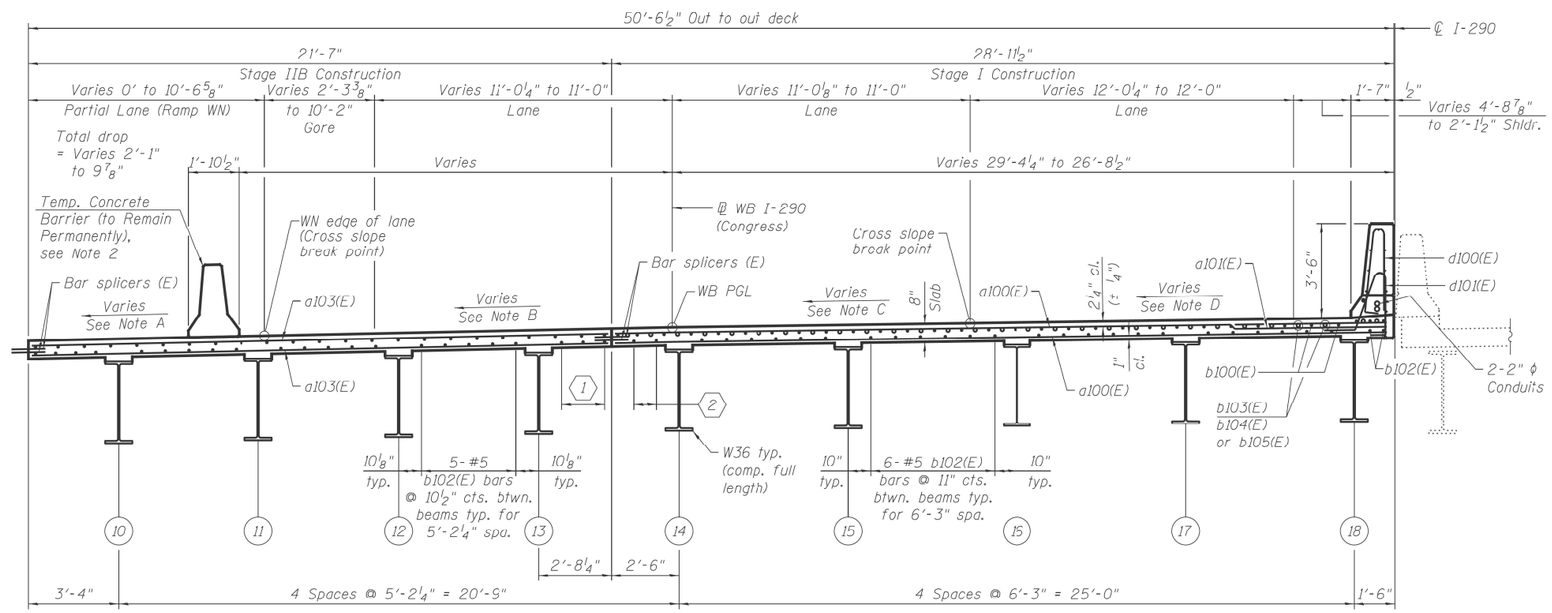

NEAR MIDSPAN **NEAR PIER**

CROSS SECTION II - UNIT I

(Looking East)

Sta. 5212+44.11 to Sta. 5210+50.53

FOR INFORMATION ONLY

MODEL: Default
FILE NAME: pw:\\ildot-pw.bentley.com:PWIDOT\Documents\IDOT Offices\District 1\Projects\Circle Int\CADData\Design-Int-Rdwy.dgn

USER NAME = naveed.hassan	DESIGNED -	REVISED -	
	DRAWN -	REVISED -	
PLOT SCALE = 100.0000 ' / in.	CHECKED -	REVISED -	
PLOT DATE = 12/19/2022	DATE -	REVISED -	

STATE OF ILLINOIS
DEPARTMENT OF TRANSPORTATION

LOCATION 2: I-290 (CONGRESS) VIADUCT OVER DES PLAINES ST. TO CANAL ST. (SN: 016-0461)
EXISTING CROSS SECTIONS - WB

SCALE: | SHEET OF SHEETS | STA. TO STA.

VAR. RTE.	SECTION	COUNTY	TOTAL SHEETS	SHEET NO.
VAR.	FAI VARIOUS BRIDGE SEALING	COOK	75	18
		CONTRACT NO. 62U35		
	ILLINOIS	FED. AID PROJECT		

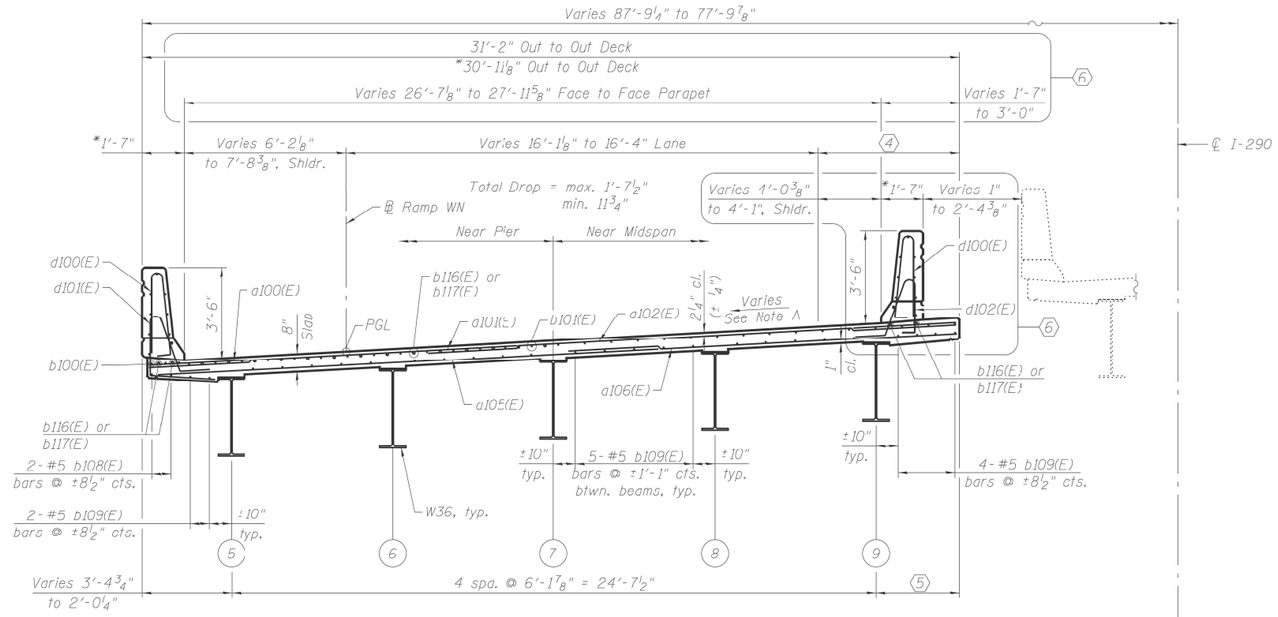

CROSS SECTION - UNIT I

(Looking East)

Ramp WN Sta. 1103+04.94 to 1102+23.06

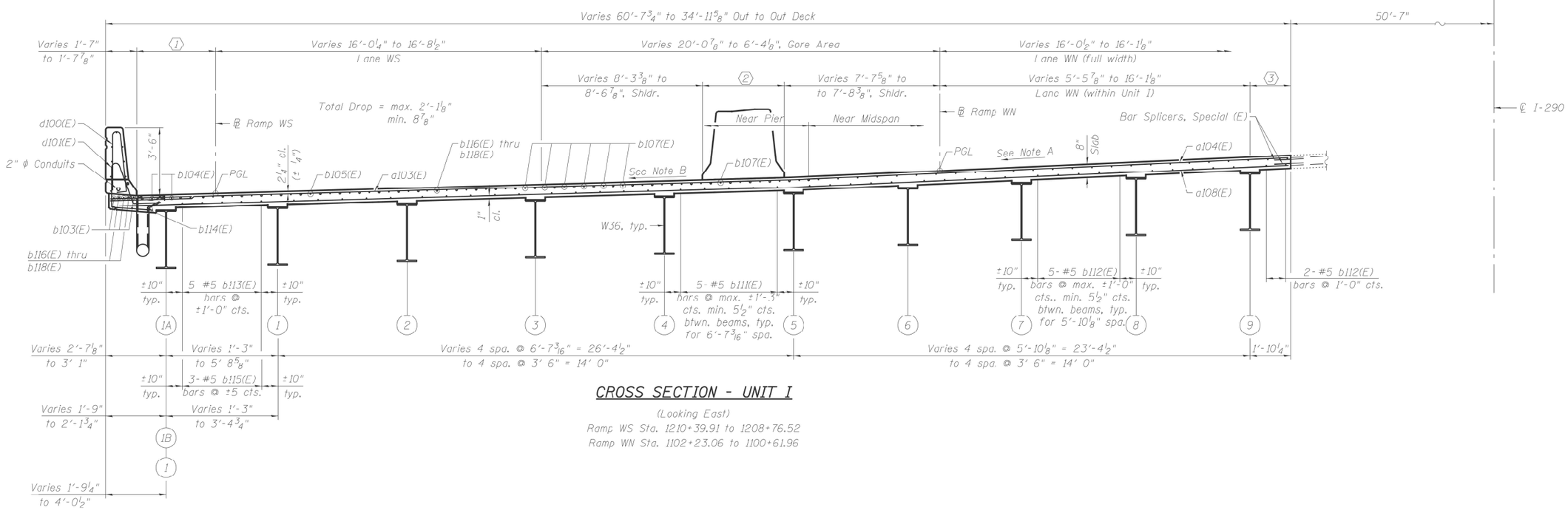

CROSS SECTION - UNIT I

(Looking East)

Ramp WS Sta. 1210+39.91 to 1208+76.52

Ramp WN Sta. 1102+23.06 to 1100+61.96

FOR INFORMATION ONLY

MODEL: Default
FILE NAME: pw:\\ildot-pw.bentley.com:PWIDOT\Documents\IDOT Offices\District 1\Projects\Cricle - Int\CADData\Design-Int-Rdwy.dgn

USER NAME = naveed.hassan	DESIGNED -	REVISED -	
	DRAWN -	REVISED -	
PLOT SCALE = 100.0000 ' / in.	CHECKED -	REVISED -	
PLOT DATE = 12/19/2022	DATE -	REVISED -	

STATE OF ILLINOIS
DEPARTMENT OF TRANSPORTATION

LOCATION 2: I-290 (CONGRESS) VIADUCT OVER DES PLAINES ST. TO CANAL ST. (SN: 016-0461)
EXISTING CROSS SECTIONS - WB RAMP

SCALE: | SHEET OF SHEETS | STA. TO STA.

VAR. RTE.	SECTION	COUNTY	TOTAL SHEETS	SHEET NO.
VAR.	FAI VARIOUS BRIDGE SEALING	COOK	75	19
		CONTRACT NO. 62U35		
		ILLINOIS	FED. AID PROJECT	

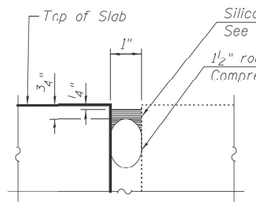

DETAIL "A"

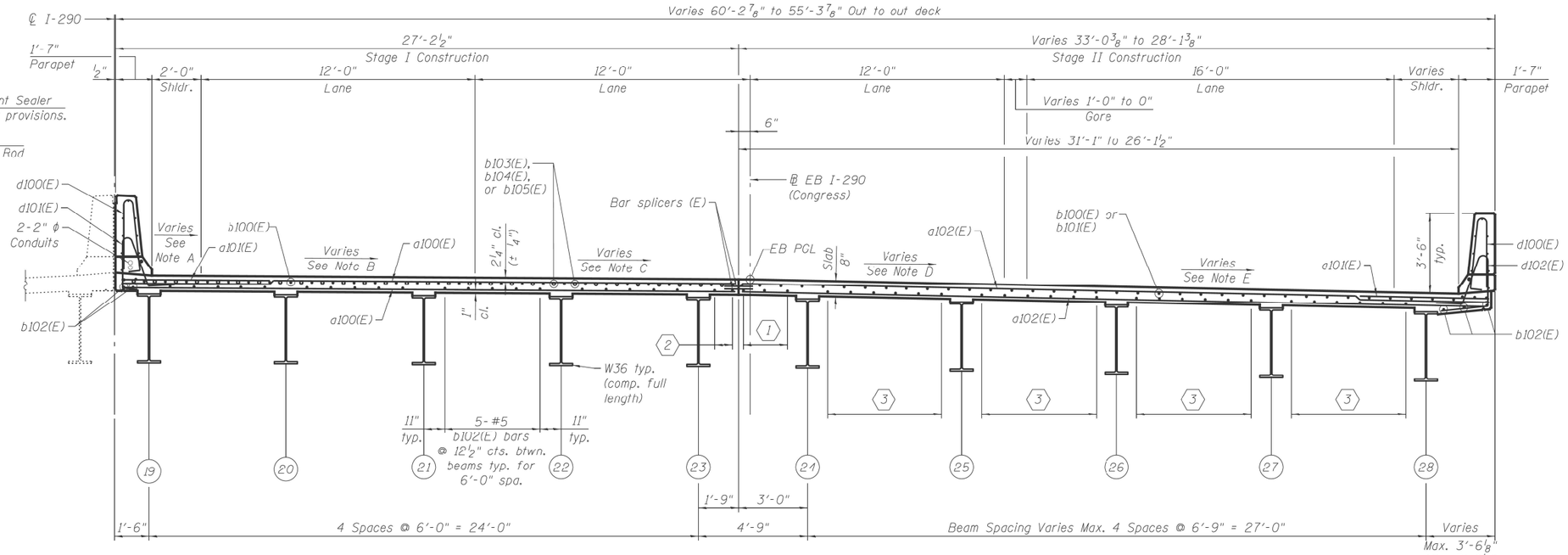

CROSS SECTION I - UNIT I

(Looking East)

Sta. 5160+64.57 to Sta. 5162+27.03

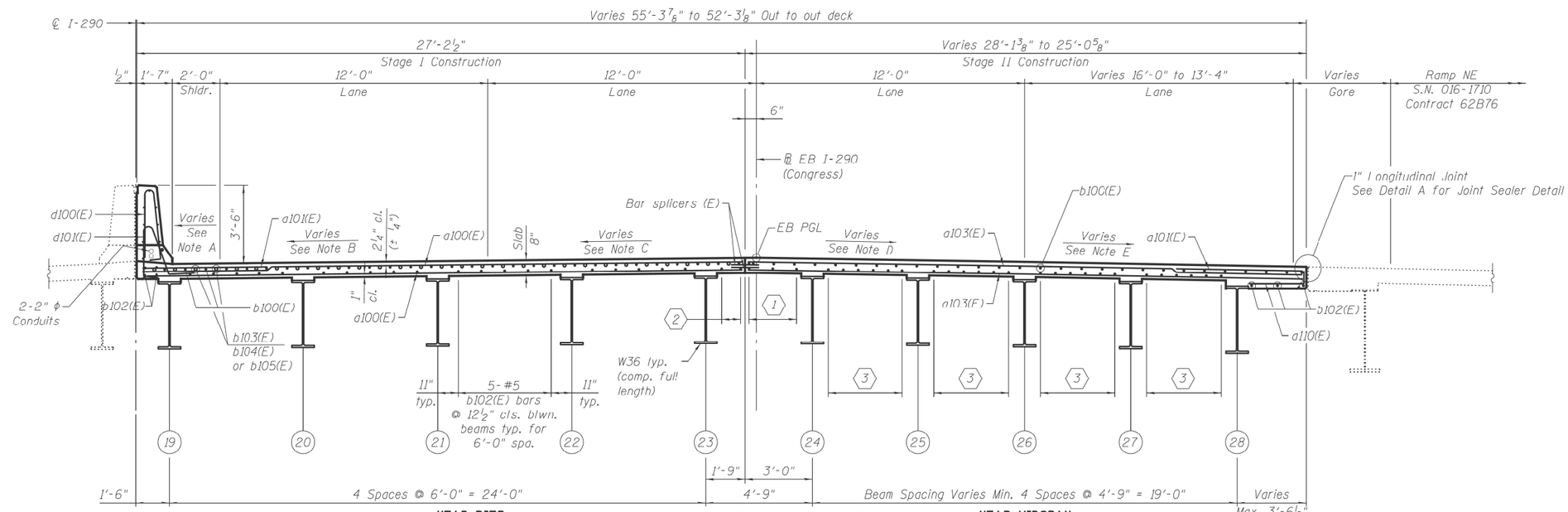

CROSS SECTION II - UNIT I

(Looking East)

Sta. 5162+27.03 to Sta. 5163+05.84

FOR INFORMATION ONLY

MODEL: Default
FILE NAME: pw:\\ildot-pw.bentley.com:PWIDOT\Documents\IDOT Offices\District 1\Projects\CirdeInt\CADData\Design-sht-plan.cign

USER NAME = naveed.hassan	DESIGNED -	REVISED -	
	DRAWN -	REVISED -	
PLOT SCALE = 100.0000 ' / in.	CHECKED -	REVISED -	
PLOT DATE = 12/19/2022	DATE -	REVISED -	

STATE OF ILLINOIS
DEPARTMENT OF TRANSPORTATION

LOCATION 2: I-290 (CONGRESS) VIADUCT OVER DES PLAINES ST.
TO CANAL ST. (SN: 016-0461)
EXISTING CROSS SECTIONS - EB

SCALE: | SHEET OF SHEETS | STA. TO STA.

VAR. RTE.	SECTION	COUNTY	TOTAL SHEETS	SHEET NO.
VAR.	FAI VARIOUS BRIDGE SEALING	COOK	75	20
		CONTRACT NO. 62U35		
	ILLINOIS	FED. AID PROJECT		

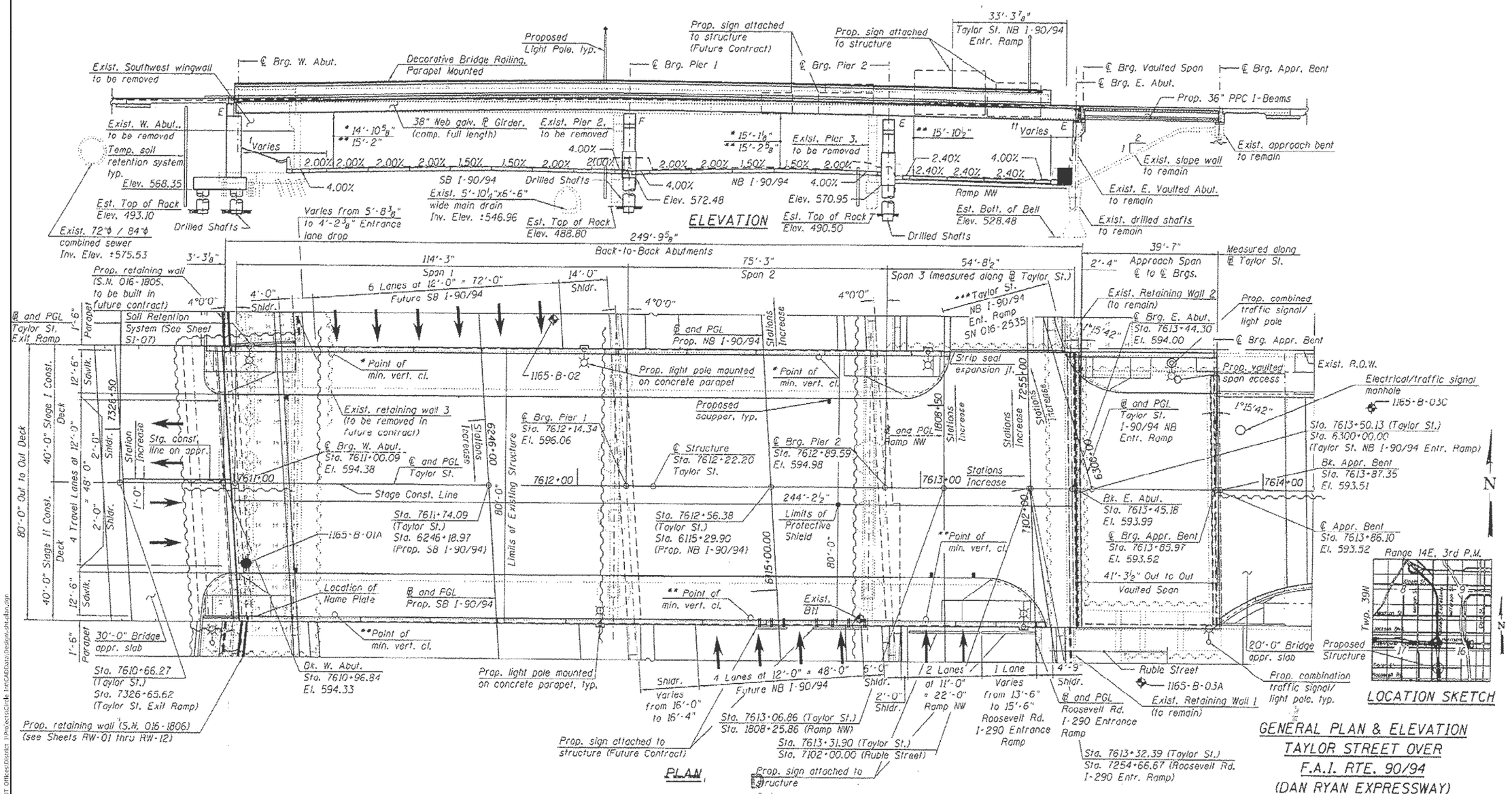

GENERAL PLAN & ELEVATION
TAYLOR STREET OVER
F.A.I. RTE. 90/94
(DAN RYAN EXPRESSWAY)
F.A.I. RTE. 90/94 - SECTION 2013-012R
COOK COUNTY
STATION 7612+22.20
STRUCTURE NO. 016-1165

FOR INFORMATION ONLY

MODEL: Default
FILE NAME: pw:\\ildot-pw.bentley.com:PWIDOT\Documents\IDOT Offices\District 1\Projects\Circle Int\CADData\Design-sht-plan.dgn

USER NAME = naveed.hassan	DESIGNED -	REVISED -	
	DRAWN -	REVISED -	
PLOT SCALE = 100.0000 ' / in.	CHECKED -	REVISED -	
PLOT DATE = 12/19/2022	DATE -	REVISED -	

STATE OF ILLINOIS
DEPARTMENT OF TRANSPORTATION

LOCATION 3: TAYLOR STREET OVER I-90/94 (SN: 016-1165)
EXISTING PLAN & ELEVATION

SCALE: | SHEET OF SHEETS | STA. TO STA.

VAR. RTE.	SECTION	COUNTY	TOTAL SHEETS	SHEET NO.
VAR.	FAI VARIOUS BRIDGE SEALING	COOK	75	21
		CONTRACT NO. 62U35		
	ILLINOIS	FED. AID PROJECT		

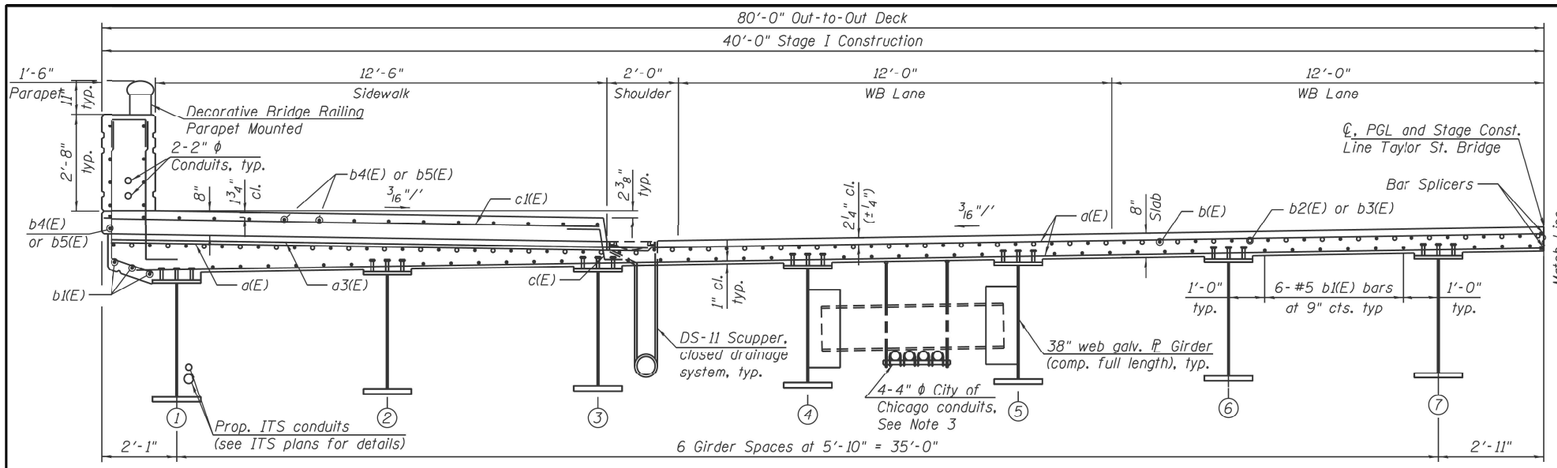

DECK CROSS SECTION (NEAR PIER)

(Looking East)

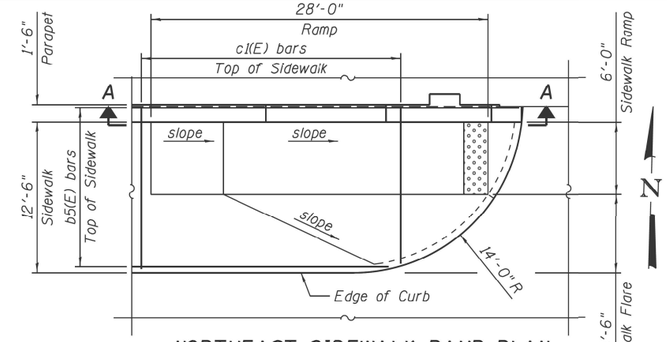

NORTHEAST SIDEWALK RAMP PLAN

(West of Taylor Street Entrance Ramp)

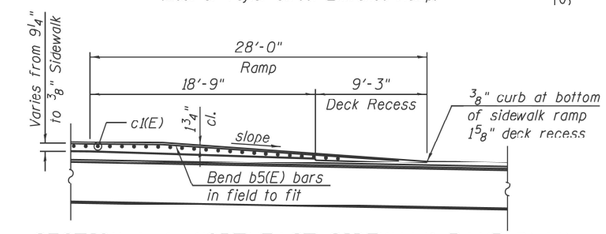

SECTION A-A: NORTHEAST SIDEWALK RAMP PLAN

(West of Taylor Street Entrance Ramp, Looking North)

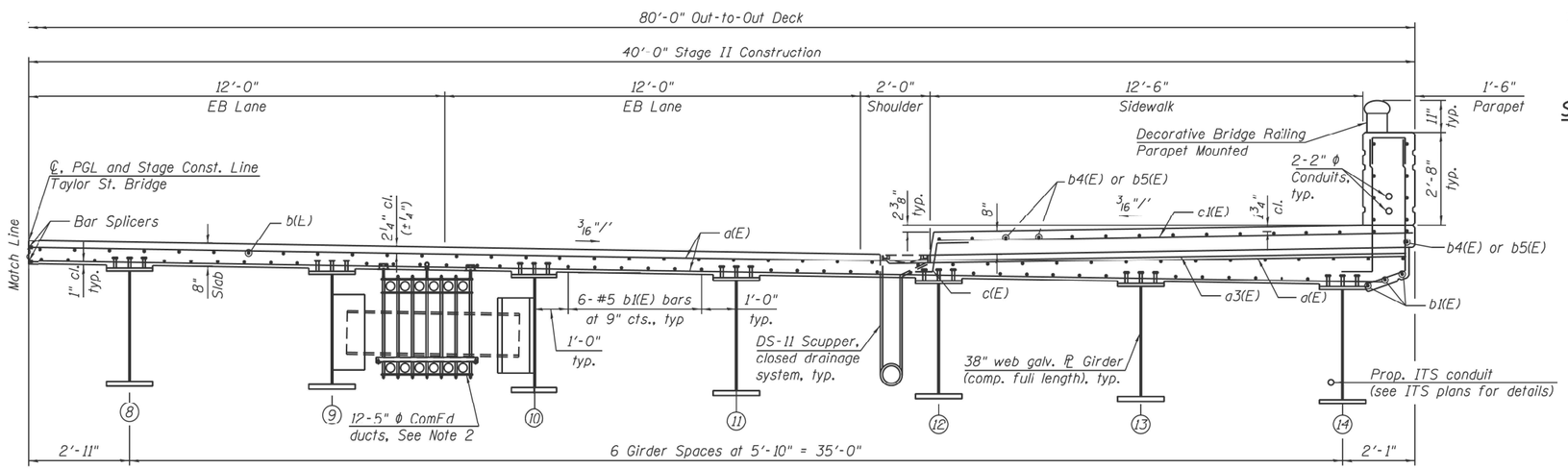

DECK CROSS SECTION (NEAR MIDSPAN)

(Looking East)

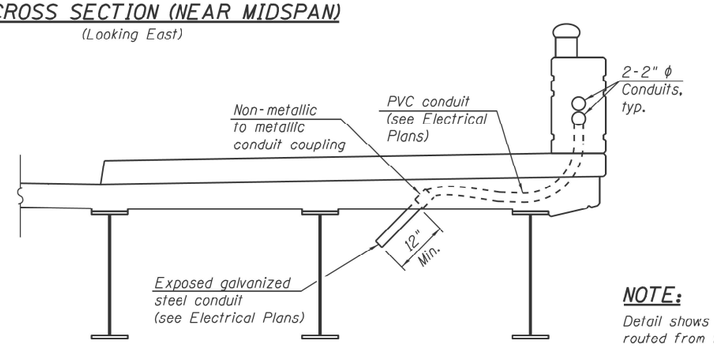

CONDUIT EMBEDDED IN DECK DETAIL

NOTE:

Detail shows the embedded conduits routed from the parapet over the girder and exiting the deck.

FOR INFORMATION ONLY

MODEL: Default
FILE NAME: pw:\\ildot-pw.bentley.com:PWIDOT\Documents\IDOT Offices\District 1\Projects\Circle Int\CAD\Data\Design-Sht-Min.dgn

USER NAME = naveed.hassan	DESIGNED -	REVISED -	
	DRAWN -	REVISED -	
PLOT SCALE = 100.0000 ' / in.	CHECKED -	REVISED -	
PLOT DATE = 12/19/2022	DATE -	REVISED -	

STATE OF ILLINOIS
DEPARTMENT OF TRANSPORTATION

LOCATION 3: TAYLOR STREET OVER I-90/94 (SN: 016-1165)
EXISTING CROSS SECTIONS

SCALE: | SHEET OF SHEETS | STA. TO STA.

VAR. RTE.	SECTION	COUNTY	TOTAL SHEETS	SHEET NO.
VAR.	FAI VARIOUS BRIDGE SEALING	COOK	75	22
		CONTRACT NO. 62U35		
		ILLINOIS	FED. AID PROJECT	

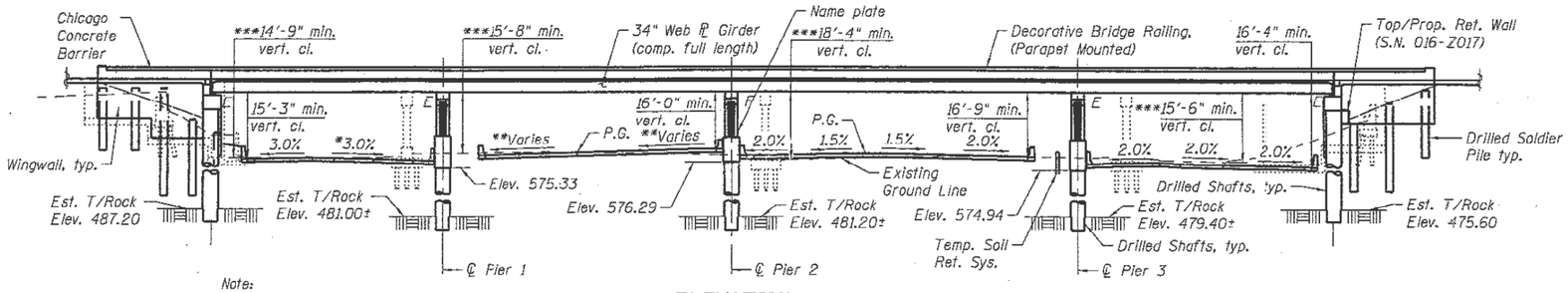

Note:
Roadway cross sections and lane configuration under shown in plan and elevation are part of future contract. For existing cross sections under Monroe Street, see Roadway Plans.

ELEVATION

* Varies from 3.0% @ Sta. 1305+28.07 to 2.0% in the opposite direction @ Sta. 1306+28.07
** Varies from 2.0% @ Sta. 6206+14.92 to 4.0% @ Sta. 6207+21.92
***Interim vertical clearance

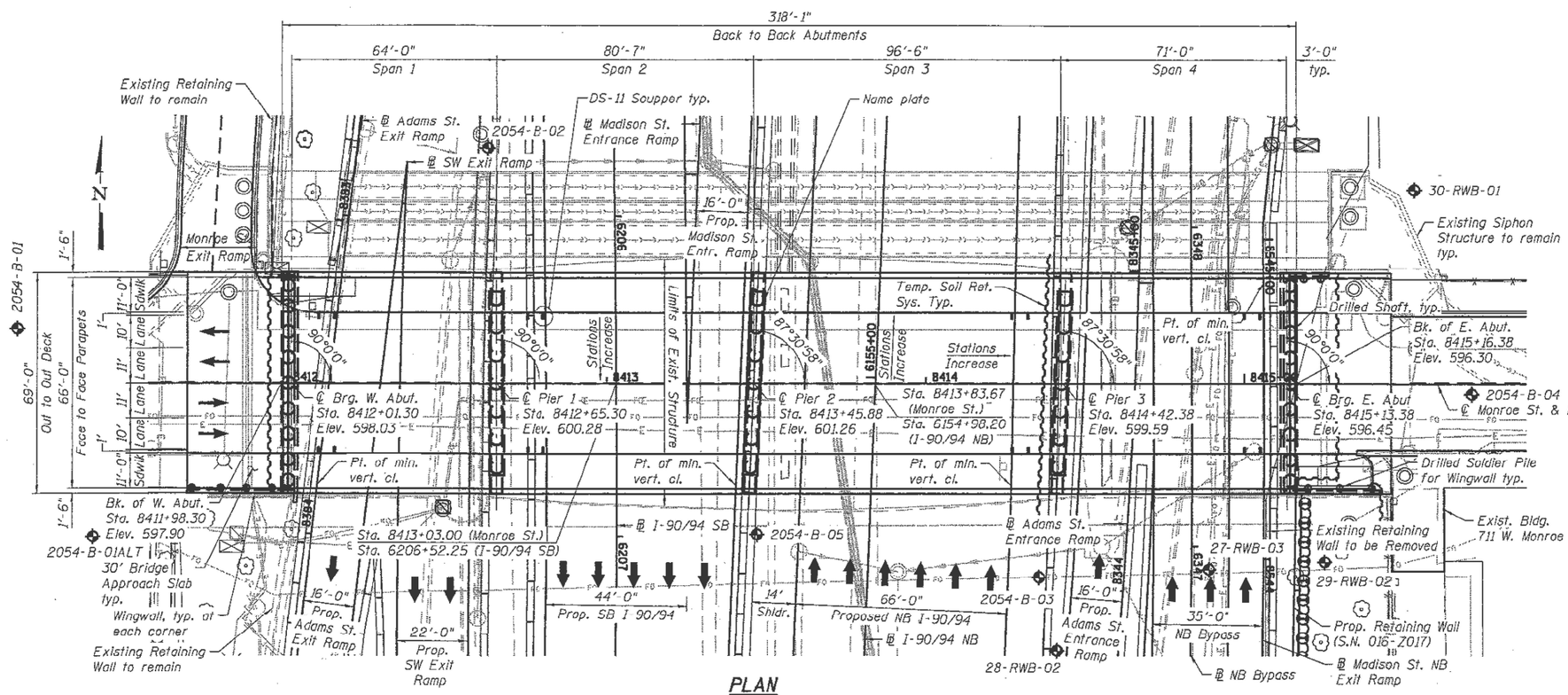

PLAN

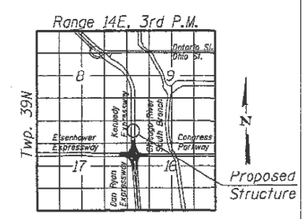

LOCATION SKETCH

GENERAL PLAN & ELEVATION
MONROE ST. OVER I-90/94
(KENNEDY EXPRESSWAY)
F.A.U. ROUTE 1420
SECTION 2014-016R&B
COOK COUNTY
STATION 8413+45.88
STRUCTURE NO. 016-1700

FOR INFORMATION ONLY

USER NAME = naveed.hassan	DESIGNED -	REVISED -	STATE OF ILLINOIS DEPARTMENT OF TRANSPORTATION
	DRAWN -	REVISED -	
PLOT SCALE = 100.0000 ' / in.	CHECKED -	REVISED -	
PLOT DATE = 12/19/2022	DATE -	REVISED -	

LOCATION 4: MONROE ST. OVER I-90/94 (SN: 016-1700)
EXISTING PLAN & ELEVATION

SCALE: | SHEET OF SHEETS | STA. TO STA.

VAR. RTE.	SECTION	COUNTY	TOTAL SHEETS	SHEET NO.
VAR.	FAI VARIOUS BRIDGE SEALING	COOK	75	23
		CONTRACT NO. 62U35		
	ILLINOIS	FED. AID PROJECT		

MODEL: Default
FILE NAME: pw:\\ildot-pw.bentley.com:PWIDOT\Documents\IDOT Offices\District 1\Projects\Circle Int\CADData\Design-Phase\

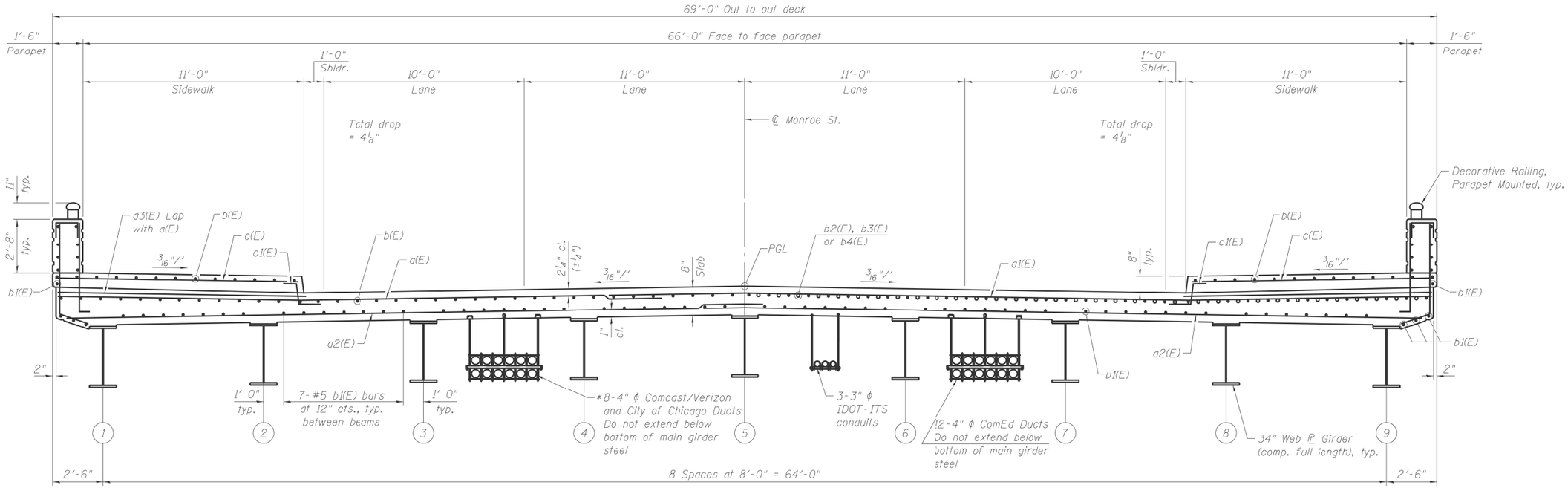

NEAR MIDSPAN

NEAR PIER

CROSS SECTION

(Looking East)

* Duct final arrangement to be determined in the field. (8 Ducts placed within a window of 12)

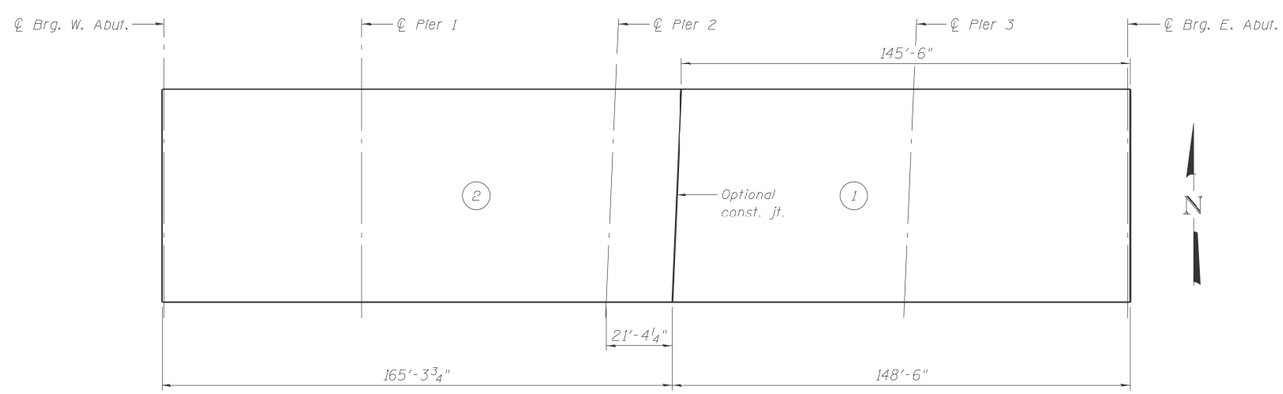

POURING SEQUENCE

FOR INFORMATION ONLY

MODEL: Default
FILE NAME: pw:\\ildot-pw.bentley.com:PWIDOT\Documents\IDOT Offices\District 1\Projects\Circle Int\CADData\Design-Sht-Plan.dgn

USER NAME = naveed.hassan	DESIGNED -	REVISED -	STATE OF ILLINOIS DEPARTMENT OF TRANSPORTATION
	DRAWN -	REVISED -	
PLOT SCALE = 100.0000 ' / in.	CHECKED -	REVISED -	
PLOT DATE = 12/19/2022	DATE -	REVISED -	

LOCATION 4: MONROE ST. OVER I-90/94 (SN: 016-1700)
EXISTING CROSS SECTION

SCALE: | SHEET OF SHEETS | STA. TO STA.

VAR. RTE.	SECTION	COUNTY	TOTAL SHEETS	SHEET NO.
VAR.	FAI VARIOUS BRIDGE SEALING	COOK	75	24
		CONTRACT NO. 62U35		
	ILLINOIS	FED. AID PROJECT		

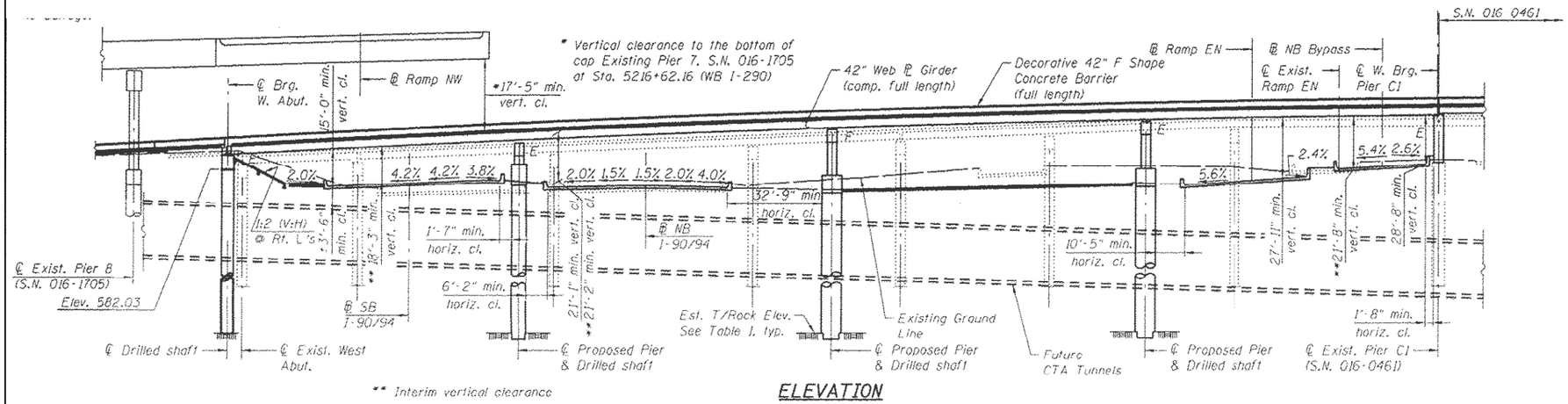

ELEVATION

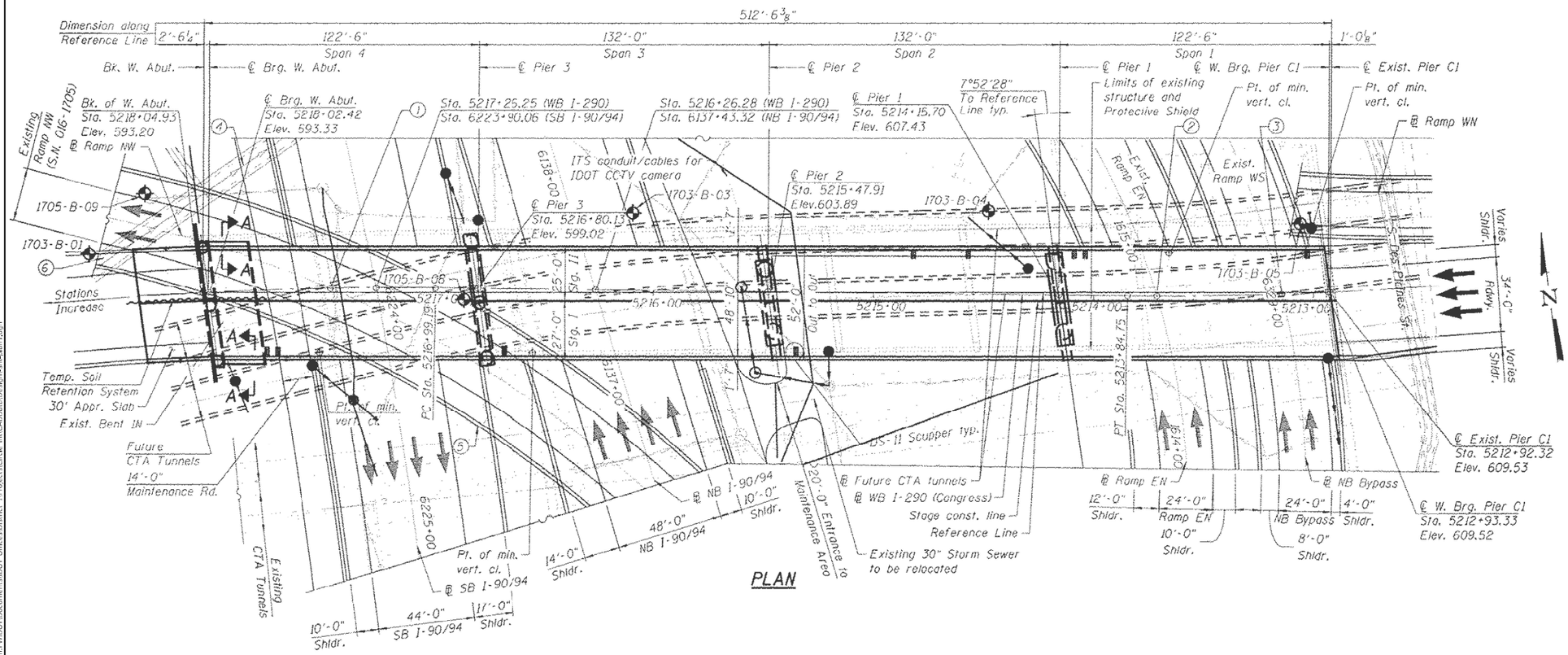

PLAN

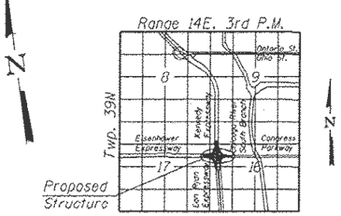

LOCATION SKETCH

GENERAL PLAN & ELEVATION
WB I-290 (CONGRESS)
OVER I-90/94
F.A.I. ROUTE 90/94/290
SECTION 2014-004R&B
COOK COUNTY
STATION 5216+26.28
STRUCTURE NO. 016-1703

FOR INFORMATION ONLY

MODEL: Default
FILE NAME: pw:\\illinois-pw.bentley.com:PWIDOT\Documents\IDOT Offices\District 1\Projects\Circle Int\CAD\Sta\Design-Int-Ren1.dgn

USER NAME = naveed.hassan	DESIGNED -	REVISED -	
	DRAWN -	REVISED -	
PLOT SCALE = 100.0000 ' / in.	CHECKED -	REVISED -	
PLOT DATE = 12/19/2022	DATE -	REVISED -	

STATE OF ILLINOIS
DEPARTMENT OF TRANSPORTATION

LOCATION 5: WB I-290 OVER I-90/94 (SN: 016-1703)
EXISTING PLAN & ELEVATION

SCALE: | SHEET OF SHEETS | STA. TO STA.

VAR. RTE.	SECTION	COUNTY	TOTAL SHEETS	SHEET NO.
VAR.	FAI VARIOUS BRIDGE SEALING	COOK	75	25
		CONTRACT NO. 62U35		
		ILLINOIS FED. AID PROJECT		

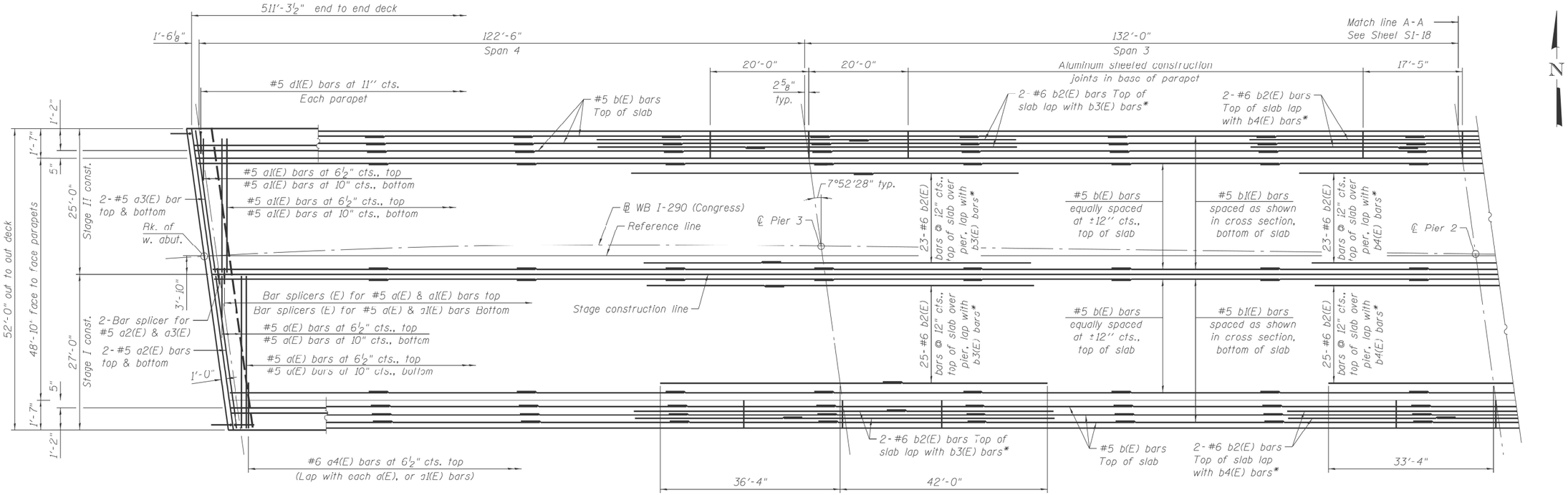

DECK PLAN

* Alternate location of lap

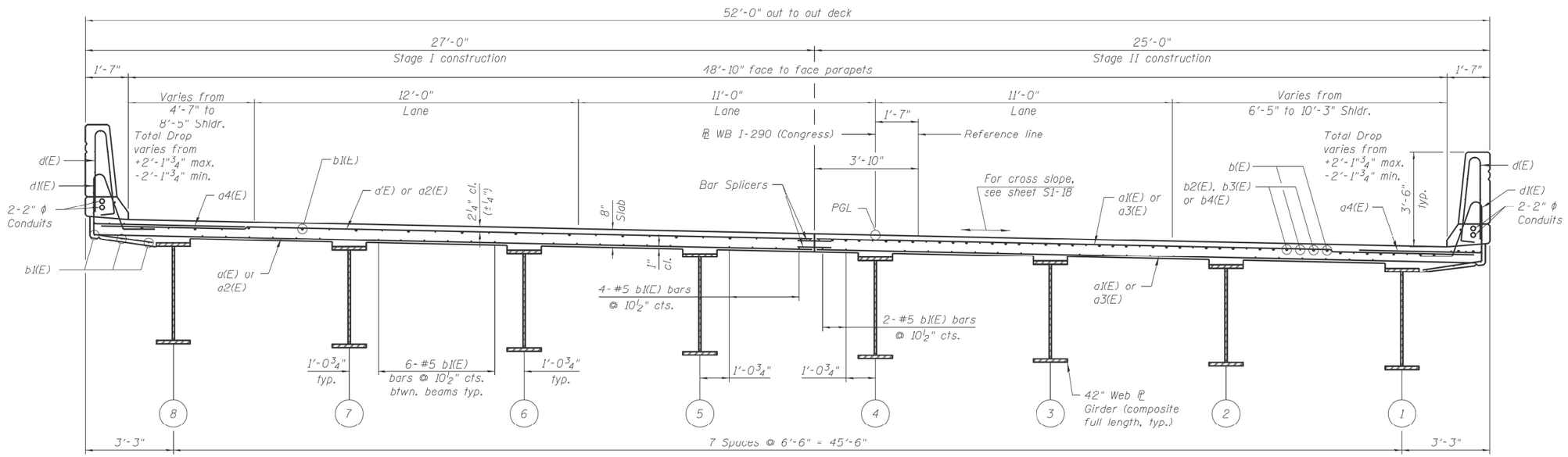

NEAR MIDSPAN

CROSS SECTION
(Looking West)

NEAR PIER

FOR INFORMATION ONLY

MODEL: Default
FILE NAME: pw:\\ildot-pw.bentley.com:PWIDOT\Documents\IDOT Offices\District 1\Projects\Circle Int\CADData\Design-Site-Ren1.dgn

USER NAME = naveed.hassan	DESIGNED -	REVISED -	
	DRAWN -	REVISED -	
PLOT SCALE = 100.0000 ' / in.	CHECKED -	REVISED -	
PLOT DATE = 12/19/2022	DATE -	REVISED -	

STATE OF ILLINOIS
DEPARTMENT OF TRANSPORTATION

LOCATION 5: WB I-290 OVER I-90/94 (SN: 016-1703)
EXISTING CROSS SECTION

SCALE: | SHEET OF SHEETS | STA. TO STA.

VAR. RTE.	SECTION	COUNTY	TOTAL SHEETS	SHEET NO.
VAR.	FAI VARIOUS BRIDGE SEALING	COOK	75	26
		CONTRACT NO. 62U35		
		ILLINOIS	FED. AID PROJECT	

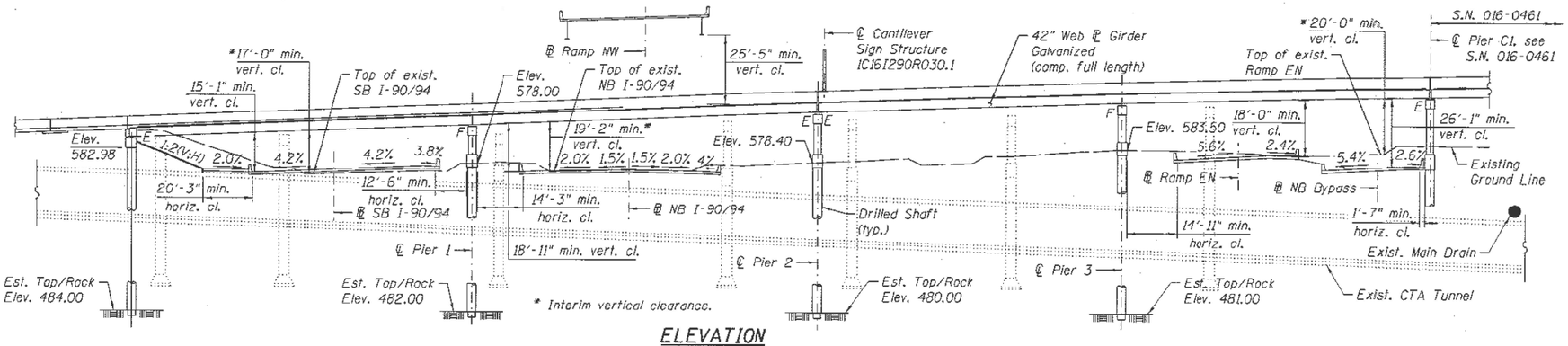

ELEVATION

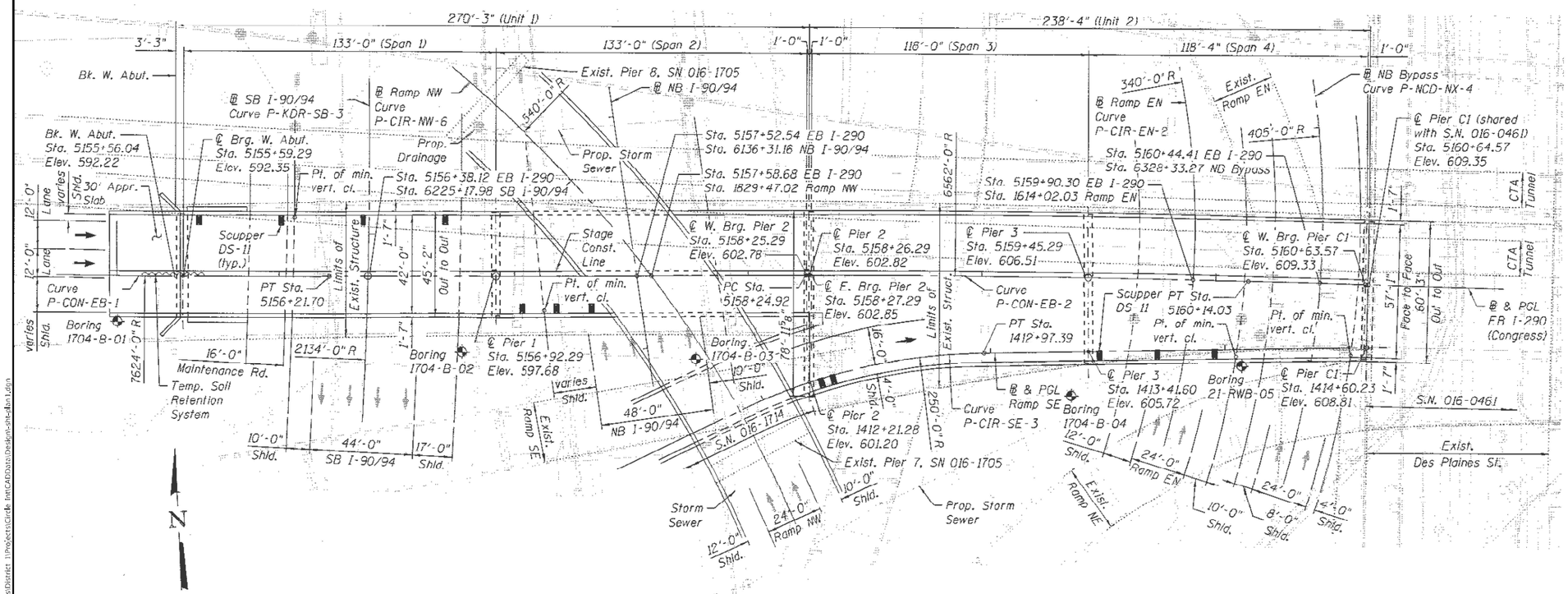

PLAN

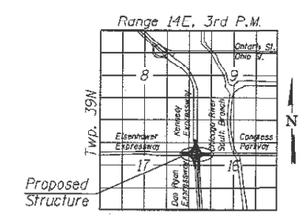

LOCATION SKETCH

GENERAL PLAN & ELEVATION
EB I-290 (CONGRESS)
OVER I-90/94
F.A.I. RTE. 90/94/290
SECTION 2014-001 R&B
COOK COUNTY
STATION 5156+92.29
STRUCTURE NO. 016-1704

FOR INFORMATION ONLY

MODEL: Default
FILE NAME: pw:\\ildot-pw.bentley.com:PWIDOT\Documents\IDOT Offices\District 1\Projects\Circle Int\CADData\Design-Sht-Mon1.dgn

USER NAME = naveed.hassan	DESIGNED -	REVISED -	STATE OF ILLINOIS DEPARTMENT OF TRANSPORTATION
	DRAWN -	REVISED -	
PLOT SCALE = 100.0000 ' / in.	CHECKED -	REVISED -	
PLOT DATE = 12/19/2022	DATE -	REVISED -	

LOCATION 6: EB I-290 OVER I-90/94 (SN: 016-1704)
EXISTING PLAN & ELEVATION

SCALE: | SHEET OF SHEETS | STA. TO STA.

VAR. RTE.	SECTION	COUNTY	TOTAL SHEETS	SHEET NO.
VAR.	FAI VARIOUS BRIDGE SEALING	COOK	75	27
		CONTRACT NO. 62U35		
	ILLINOIS	FED. AID PROJECT		

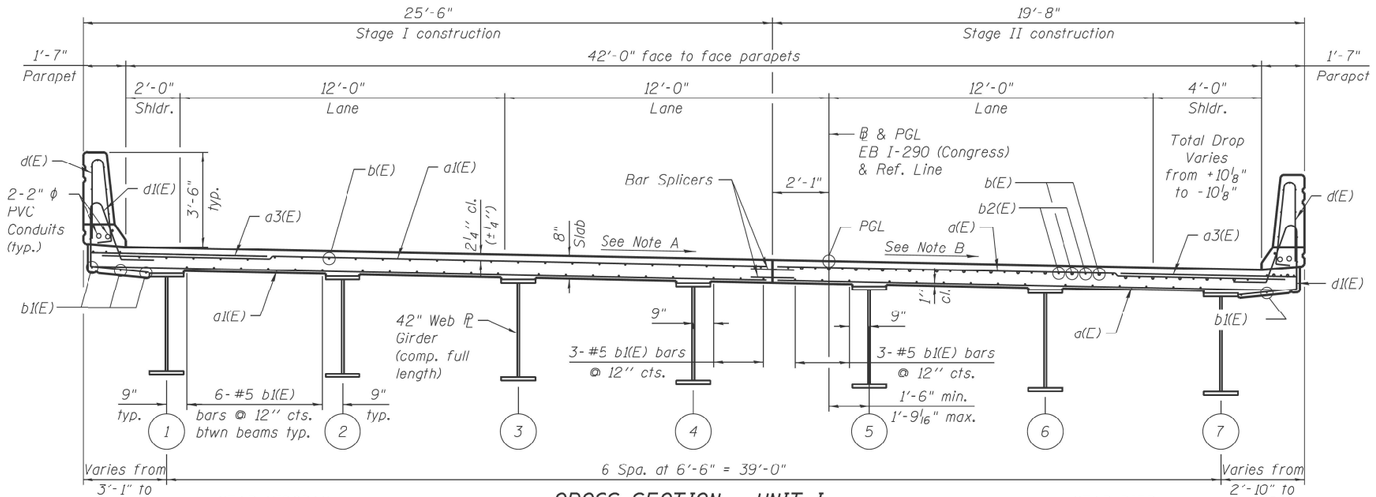

NEAR MIDSPAN

CROSS SECTION - UNIT I

(Looking East)

NEAR PIER

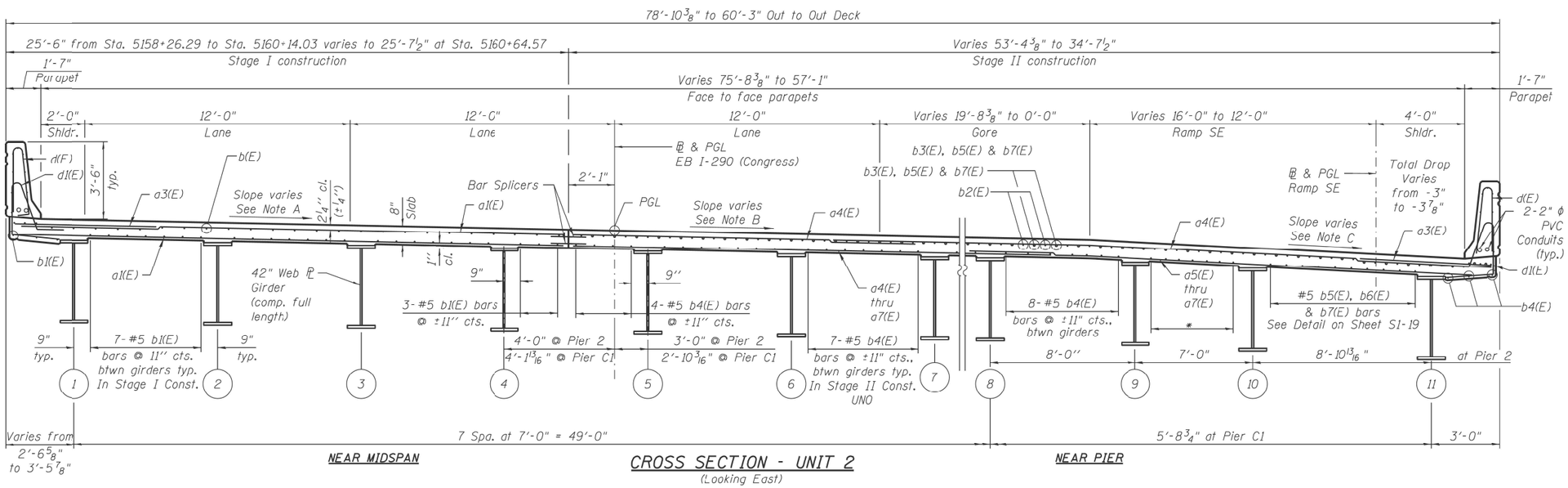

NEAR MIDSPAN

CROSS SECTION - UNIT 2

(Looking East)

NEAR PIER

FOR INFORMATION ONLY

MODEL: Default
FILE NAME: pw:\\ildot-pw.bentley.com:PWIDOT\Documents\IDOT Offices\District 1\Projects\Grade Int\CADData\Design-sht-4on1.dgn

USER NAME = naveed.hassan	DESIGNED -	REVISED -	
	DRAWN -	REVISED -	
PLOT SCALE = 100.0000 ' / in.	CHECKED -	REVISED -	
PLOT DATE = 12/19/2022	DATE -	REVISED -	

STATE OF ILLINOIS
DEPARTMENT OF TRANSPORTATION

LOCATION 6: EB I-290 OVER I-90/94 (SN: 016-1704)
EXISTING CROSS SECTION

SCALE: | SHEET OF SHEETS | STA. | TO STA.

VAR. RTE.	SECTION	COUNTY	TOTAL SHEETS	SHEET NO.
VAR.	FAI VARIOUS BRIDGE SEALING	COOK	75	28
		CONTRACT NO. 62U35		
	ILLINOIS	FED. AID PROJECT		

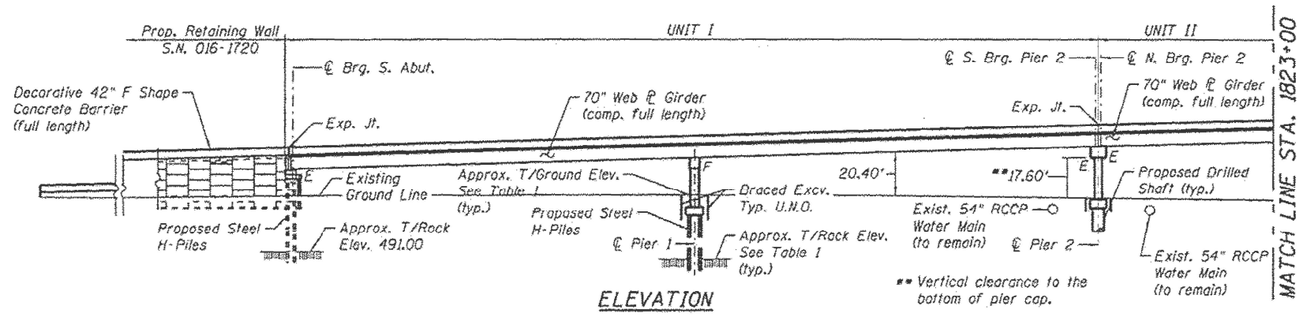

ELEVATION

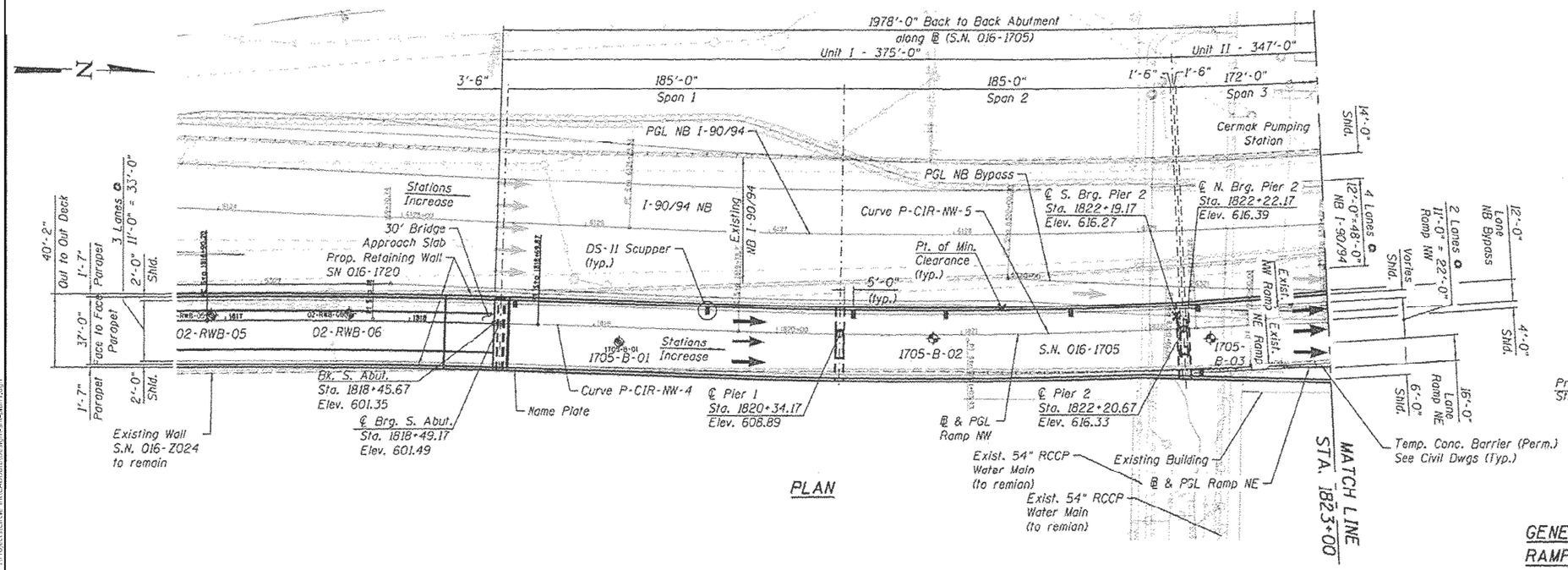

PLAN

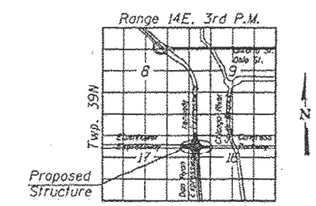

LOCATION SKETCH

GENERAL PLAN & ELEVATION - 1
RAMP NW OVER F.A.I. RTE. 90/94
(DAN RYAN EXPRESSWAY)
F.A.I. RTE. 90/94 - SECTION 2013-010R
COOK COUNTY
STATION 1829+59.43
STRUCTURE NO. 016-1705

FOR INFORMATION ONLY

MODEL: Default
FILE NAME: pw:\\ildot-pw.bentley.com:PWIDOT\Documents\IDOT Offices\District 1\Projects\Circle Int\CADData\Design-Sht-Plan1.dgn

USER NAME = naveed.hassan	DESIGNED -	REVISED -	STATE OF ILLINOIS DEPARTMENT OF TRANSPORTATION
	DRAWN -	REVISED -	
PLOT SCALE = 100.0000 ' / in.	CHECKED -	REVISED -	
PLOT DATE = 12/19/2022	DATE -	REVISED -	

LOCATION 7: RAMP FROM NB I-90/94 TO WB I-290 (SN: 016-1705)
EXISTING PLAN & ELEVATION (1 OF 3)

SCALE: | SHEET OF SHEETS | STA. TO STA.

VAR. RTE.	SECTION	COUNTY	TOTAL SHEETS	SHEET NO.
VAR.	FAI VARIOUS BRIDGE SEALING	COOK	75	29
		CONTRACT NO. 62U35		
	ILLINOIS	FED. AID PROJECT		

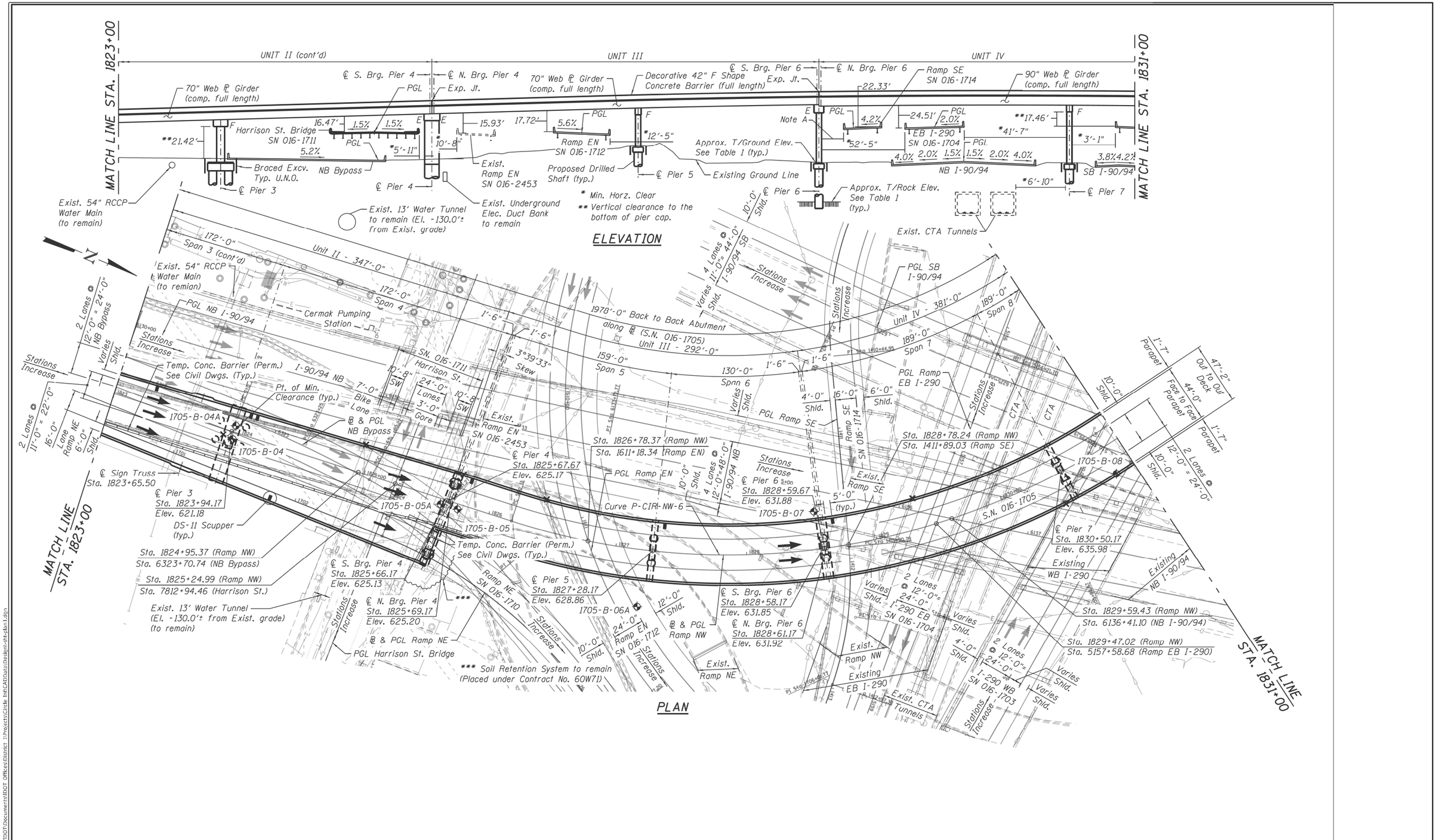

FOR INFORMATION ONLY

USER NAME = naveed.hassan	DESIGNED -	REVISED -	
	DRAWN -	REVISED -	
PLOT SCALE = 100.0000 ' / in.	CHECKED -	REVISED -	
PLOT DATE = 12/19/2022	DATE -	REVISED -	

STATE OF ILLINOIS
DEPARTMENT OF TRANSPORTATION

LOCATION 7: RAMP FROM NB I-90/94 TO WB I-290 (SN: 016-1705)
EXISTING PLAN & ELEVATION (2 OF 3)

SCALE: | SHEET OF SHEETS | STA. TO STA.

VAR. RTE.	SECTION	COUNTY	TOTAL SHEETS	SHEET NO.
VAR.	FAI VARIOUS BRIDGE SEALING	COOK	75	30
		CONTRACT NO. 62U35		
		ILLINOIS	FED. AID PROJECT	

MODEL: Default
FILE NAME: pw:\\ildot-pw.bentley.com:PWIDOT\Documents\IDOT Offices\District 1\Projects\Circle Int\CADData\Design-dht-plan1.dgn

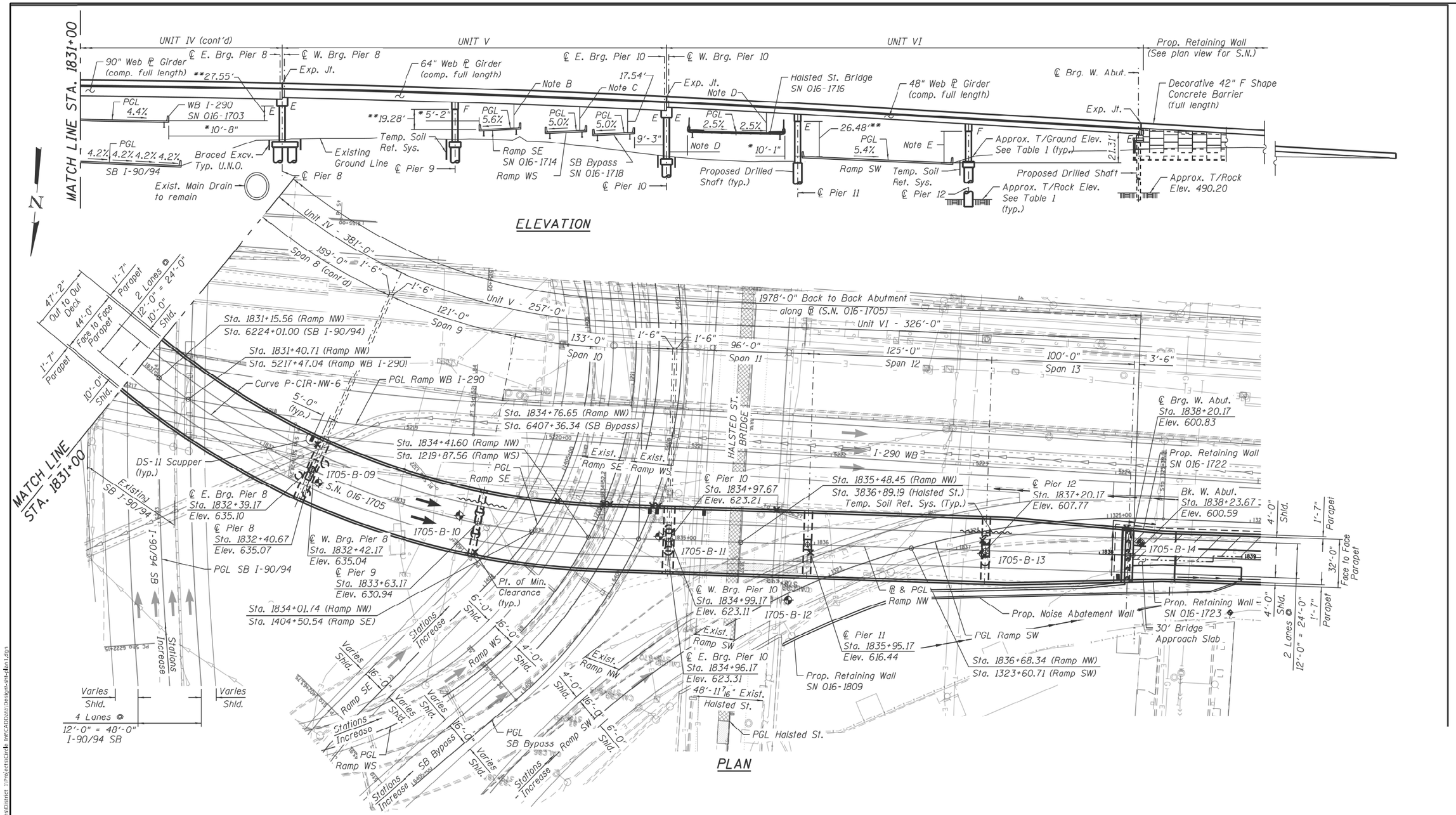

FOR INFORMATION ONLY

USER NAME = naveed.hassan	DESIGNED -	REVISED -	
	DRAWN -	REVISED -	
PLOT SCALE = 100.0000 ' / in.	CHECKED -	REVISED -	
PLOT DATE = 12/19/2022	DATE -	REVISED -	

STATE OF ILLINOIS
DEPARTMENT OF TRANSPORTATION

LOCATION 7: RAMP FROM NB I-90/94 TO WB I-290 (SN: 016-1705)
EXISTING PLAN & ELEVATION (3 OF 3)

SCALE: | SHEET OF SHEETS | STA. TO STA.

VAR. RTE.	SECTION	COUNTY	TOTAL SHEETS	SHEET NO.
VAR.	FAI VARIOUS BRIDGE SEALING	COOK	75	31
		CONTRACT NO. 62U35		
		ILLINOIS FED. AID PROJECT		

MODEL: Default
FILE NAME: pw:\\ildot-pw.bentley.com:PWIDOT\Documents\IDOT Offices\District 1\Projects\Circle Int\CADData\Design-Int-Ration

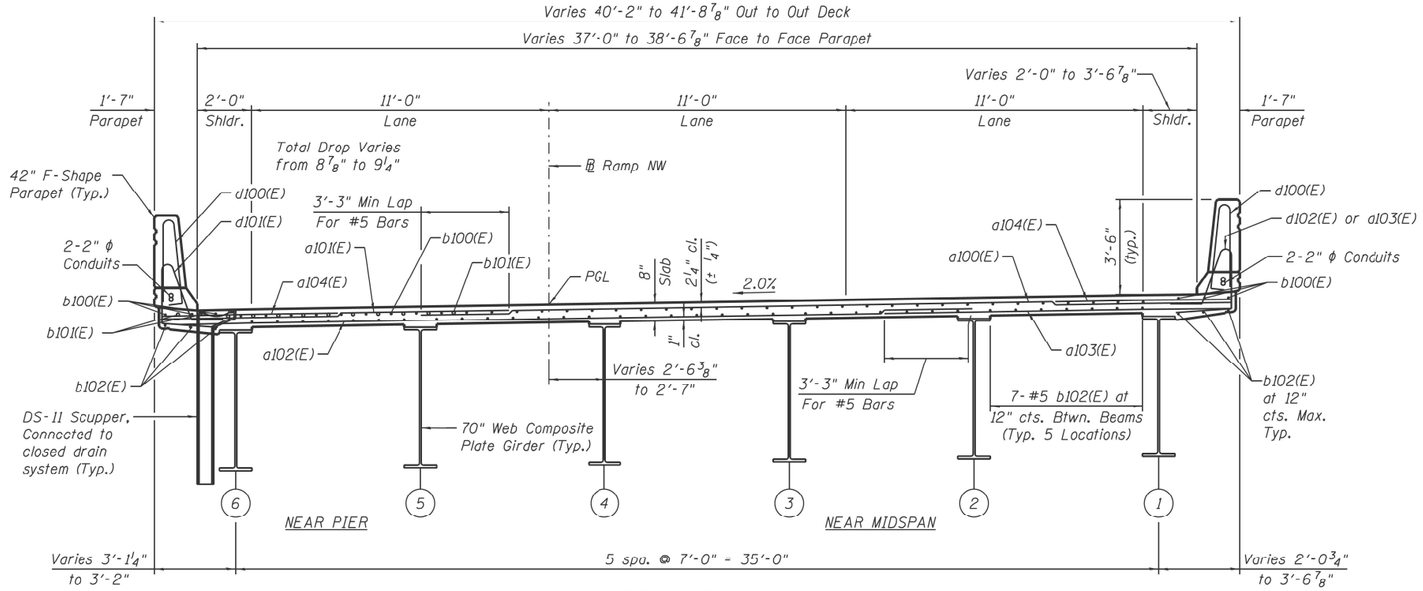

DECK CROSS SECTION - UNIT I

(Looking Upstation)
(Dimensions measured perpendicular to baseline)

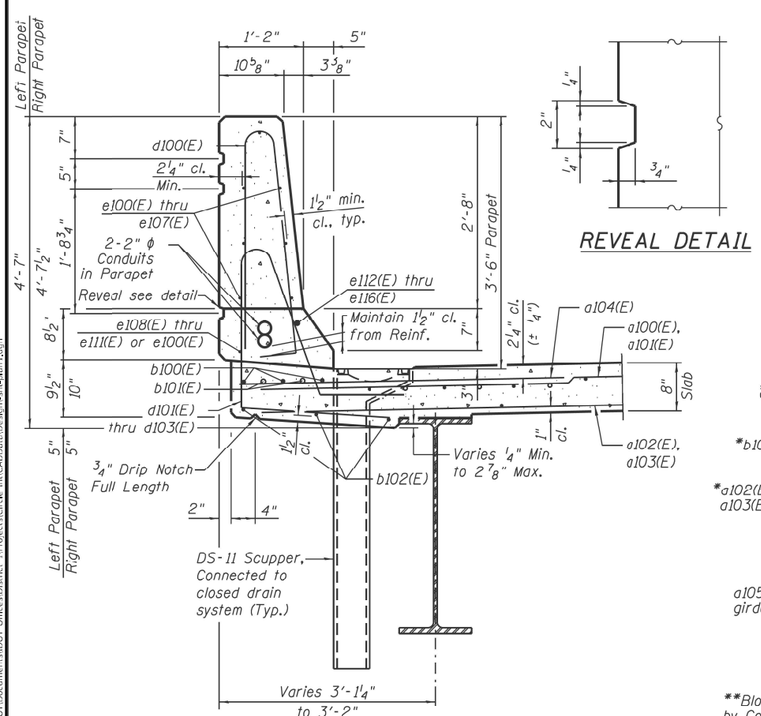

SECTION THRU PARAPET

REVEAL DETAIL

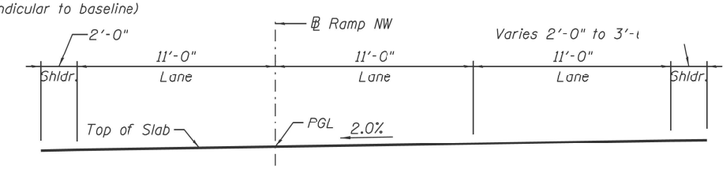

Sta. 1818+45.67 to Sta. 1822+20.67

DECK CROSS SLOPE DETAIL UNIT I

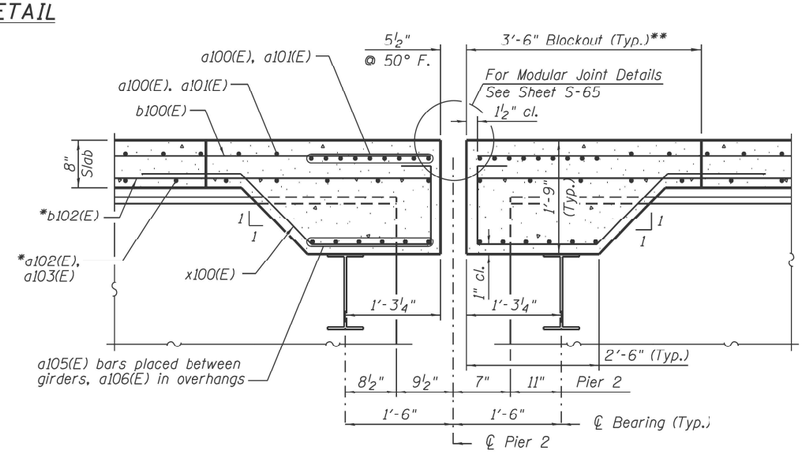

**Blockout dimensions to be verified by Contractor with Joint Manufacturer

SECTION B-B

(Horiz. Dims. @ RT L's to ℄ Brg.)

*Bars to be adjusted in to miss support boxes c beam webs

FOR INFORMATION ONLY

MODEL: Default
FILE NAME: pw:\\ildot-pw.bentley.com:PWIDOT\Documents\IDOT Offices\District 1\Projects\Circle Int\CADData\Design-sht-Ian1.dgn

USER NAME = naveed.hassan	DESIGNED -	REVISED -	
	DRAWN -	REVISED -	
PLOT SCALE = 100.0000 ' / in.	CHECKED -	REVISED -	
PLOT DATE = 12/19/2022	DATE -	REVISED -	

STATE OF ILLINOIS
DEPARTMENT OF TRANSPORTATION

LOCATION 7: RAMP FROM NB I-90/94 TO WB I-290 (SN: 016-1705)
EXISTING CROSS SECTIONS (1 OF 7)

SCALE: | SHEET OF SHEETS | STA. TO STA.

VAR. RTE.	SECTION	COUNTY	TOTAL SHEETS	SHEET NO.
VAR.	FAI VARIOUS BRIDGE SEALING	COOK	75	32
		CONTRACT NO. 62U35		
		ILLINOIS FED. AID PROJECT		

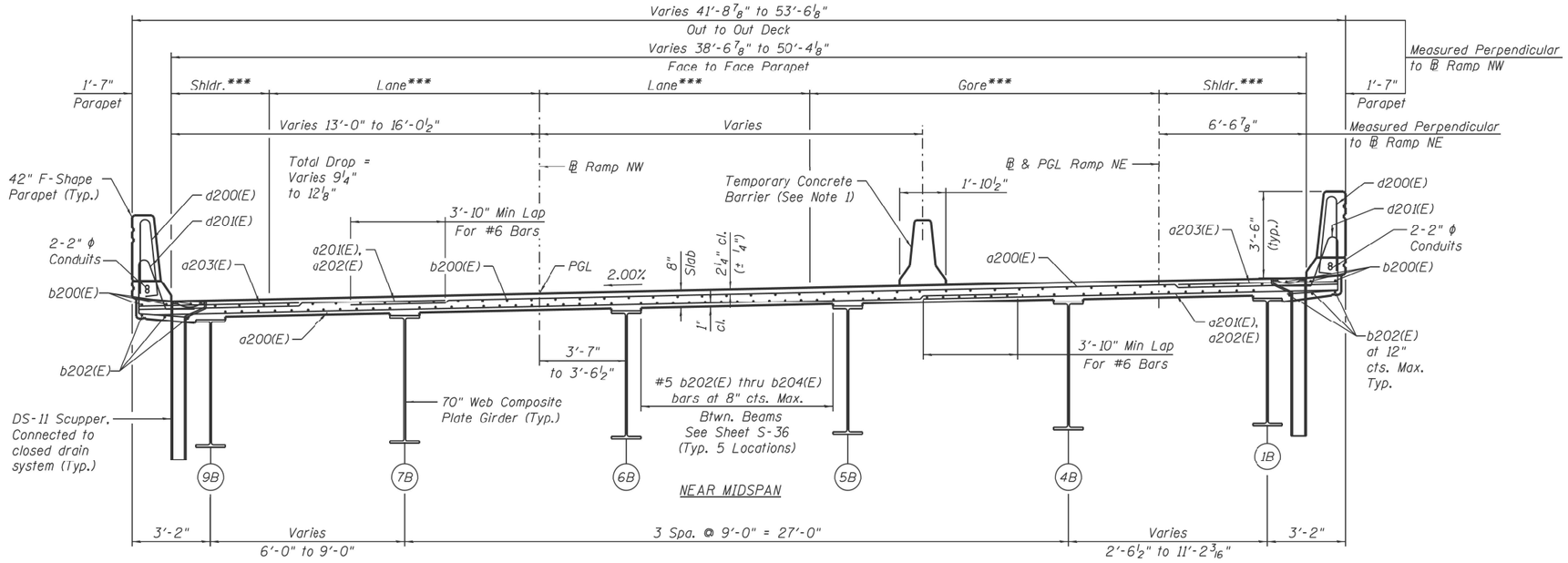

***Dimensions vary
See Roadway Plans

SECTION J-J

(Looking Upstation)
Sta. 1822+20.67 to Sta. 1823+38.44
(Dimensions measured perpendicular to baseline)

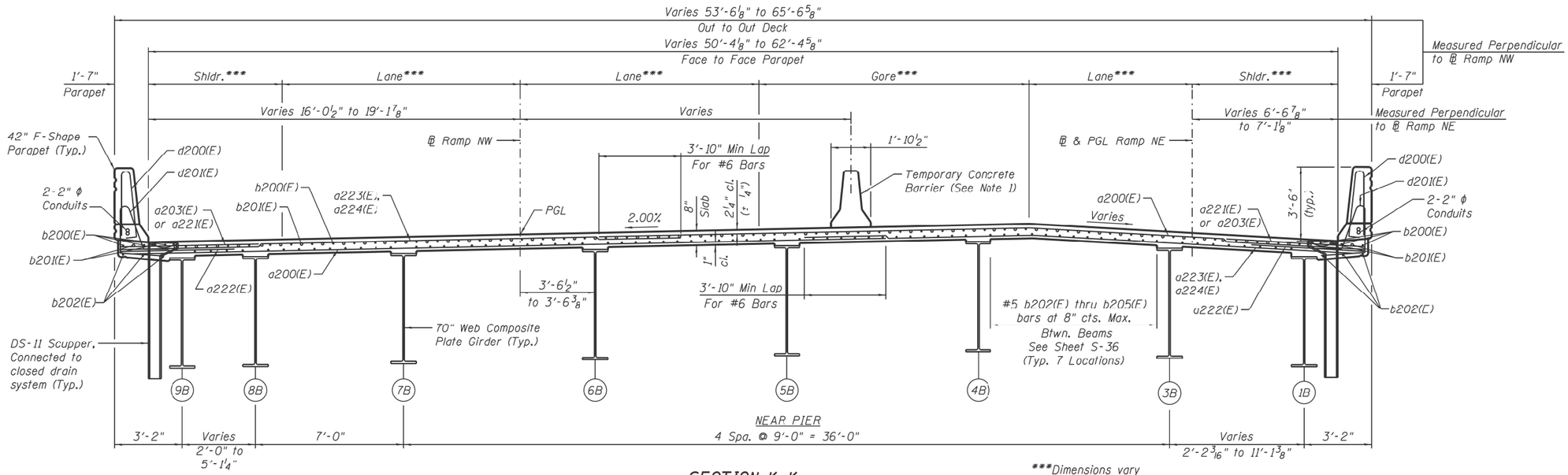

***Dimensions vary
See Roadway Plans

SECTION K-K

(Looking Upstation)
Sta. 1823+38.44 to Sta. 1824+58.67
(Dimensions measured perpendicular to baseline)

FOR INFORMATION ONLY

MODEL: Default
FILE NAME: pw:\\ildot-pw.bentley.com:PWIDOT\Documents\IDOT Offices\District 1\Projects\Circle Int\CADData\Design-sht-Man1.dgn

USER NAME = naveed.hassan	DESIGNED -	REVISED -	
	DRAWN -	REVISED -	
PLOT SCALE = 100.0000 ' / in.	CHECKED -	REVISED -	
PLOT DATE = 12/19/2022	DATE -	REVISED -	

STATE OF ILLINOIS
DEPARTMENT OF TRANSPORTATION

LOCATION 7: RAMP FROM NB I-90/94 TO WB I-290 (SN: 016-1705)
EXISTING CROSS SECTIONS (2 OF 7)

SCALE: | SHEET OF SHEETS | STA. TO STA.

VAR. RTE.	SECTION	COUNTY	TOTAL SHEETS	SHEET NO.
VAR.	FAI VARIOUS BRIDGE SEALING	COOK	75	33
		CONTRACT NO. 62U35		
		ILLINOIS	FED. AID PROJECT	

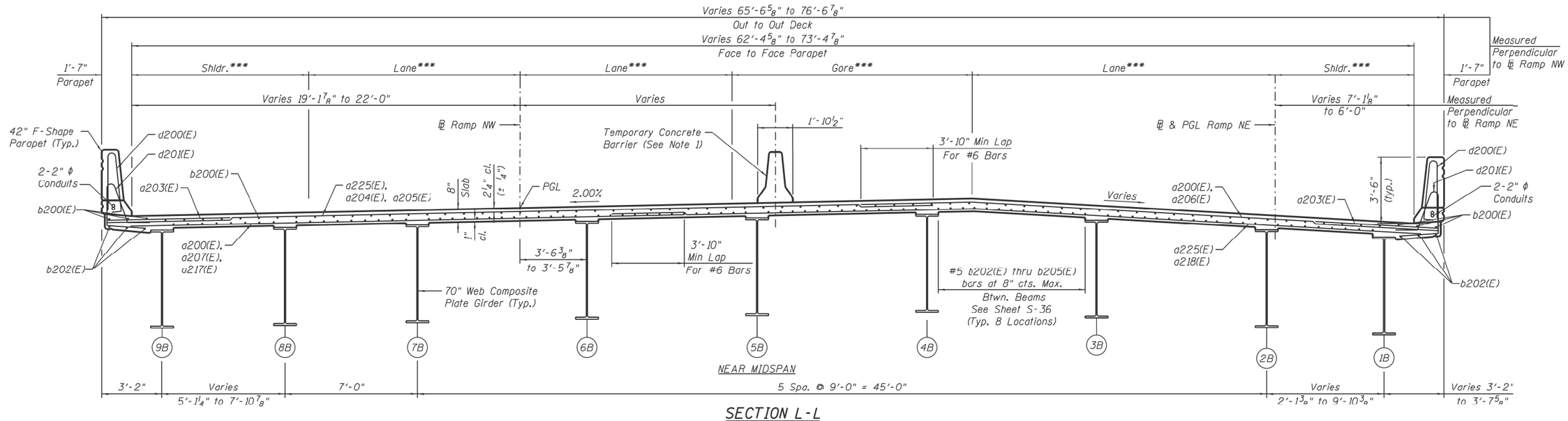

SECTION L-L

(Looking Upstation)
Sta. 1824+58.67 to Sta. 1825+67.67
(Dimensions measured perpendicular to baseline)

FOR INFORMATION ONLY

MODEL: Default
FILE NAME: pw:\\ildot-pw.bentley.com:PWIDOT\Documents\IDOT Offices\District 1\Projects\Circle Int\CADData\Design-Build\sht-4in1.dgn

USER NAME = naveed.hassan	DESIGNED -	REVISED -	STATE OF ILLINOIS DEPARTMENT OF TRANSPORTATION
	DRAWN -	REVISED -	
PLOT SCALE = 100.0000 ' / in.	CHECKED -	REVISED -	
PLOT DATE = 12/19/2022	DATE -	REVISED -	

LOCATION 7: RAMP FROM NB I-90/94 TO WB I-290 (SN: 016-1705)
EXISTING CROSS SECTIONS (3 OF 7)

SCALE: | SHEET OF SHEETS | STA. TO STA.

VAR. RTE.	SECTION	COUNTY	TOTAL SHEETS	SHEET NO.
VAR.	FAI VARIOUS BRIDGE SEALING	COOK	75	34
		CONTRACT NO. 62U35		
		ILLINOIS	FED. AID PROJECT	

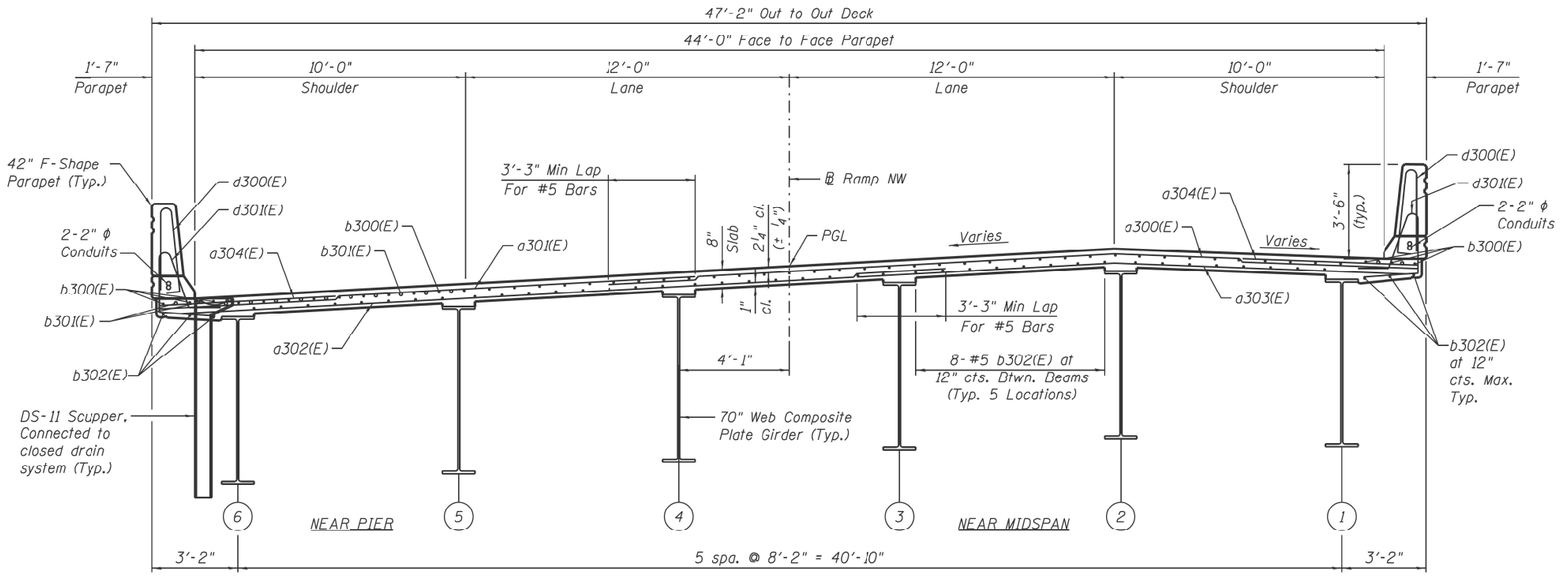

DECK CROSS SECTION - UNIT III

(Looking Upstation)

(Dimensions measured perpendicular to baseline)

FOR INFORMATION ONLY

USER NAME = naveed.hassan	DESIGNED -	REVISED -	STATE OF ILLINOIS DEPARTMENT OF TRANSPORTATION
	DRAWN -	REVISED -	
PLOT SCALE = 100.0000 ' / in.	CHECKED -	REVISED -	
PLOT DATE = 12/19/2022	DATE -	REVISED -	

LOCATION 7: RAMP FROM NB I-90/94 TO WB I-290 (SN: 016-1705)
EXISTING CROSS SECTIONS (4 OF 7)

SCALE: | SHEET OF SHEETS | STA. TO STA.

VAR. RTE.	SECTION	COUNTY	TOTAL SHEETS	SHEET NO.
VAR.	FAI VARIOUS BRIDGE SEALING	COOK	75	35

CONTRACT NO. 62U35

ILLINOIS FED. AID PROJECT

MODEL: Default
FILE NAME: pw:\\ildot-pw.bentley.com:PWIDOT\Documents\IDOT Offices\District 1\Projects\Circle Int\CADData\Design-sht-4in1.dgn

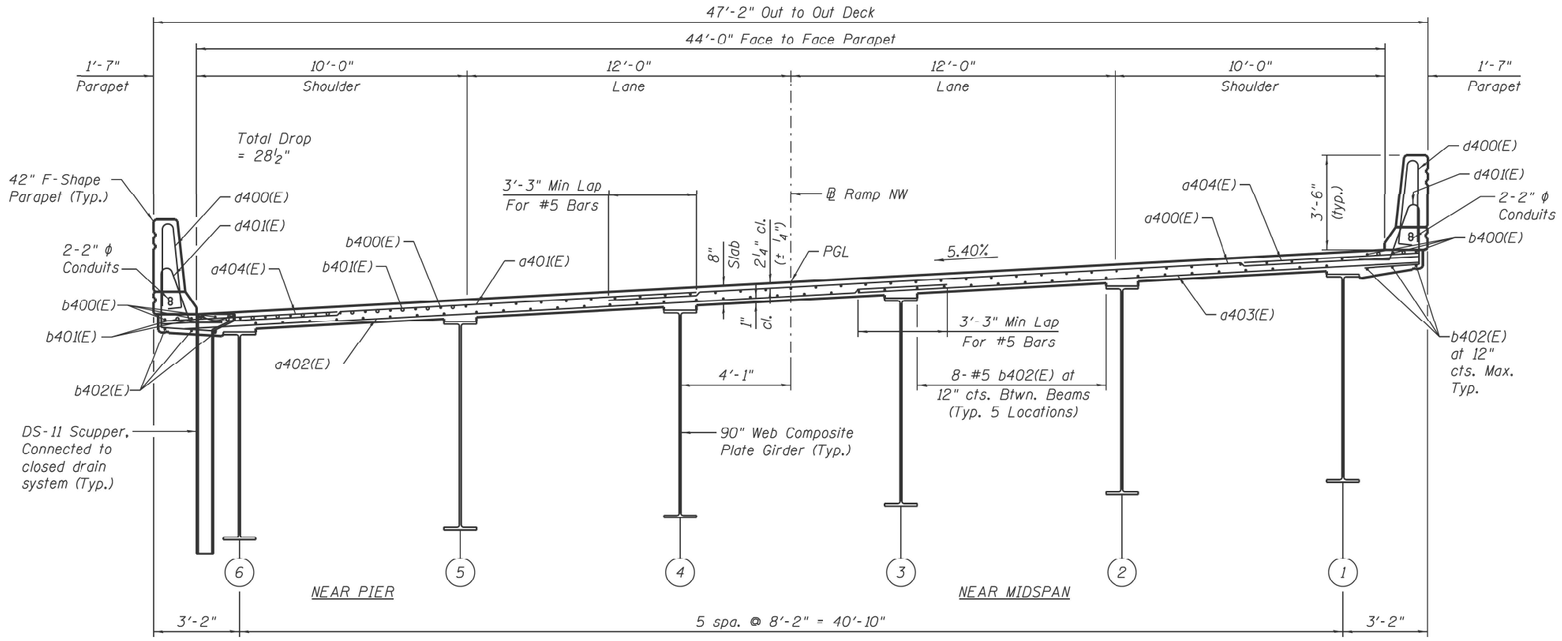

DECK CROSS SECTION - UNIT IV

(Looking Upstation)
(Dimensions measured perpendicular to baseline)

FOR INFORMATION ONLY

MODEL: Default
FILE NAME: pw:\\ildot-pw.bentley.com:PWIDOT\Documents\IDOT Offices\District 1\Projects\Circle Int\CADData\Design-Sht-Plan1.dgn

USER NAME = naveed.hassan	DESIGNED -	REVISED -	STATE OF ILLINOIS DEPARTMENT OF TRANSPORTATION
	DRAWN -	REVISED -	
PLOT SCALE = 100.0000 ' / in.	CHECKED -	REVISED -	
PLOT DATE = 12/19/2022	DATE -	REVISED -	

LOCATION 7: RAMP FROM NB I-90/94 TO WB I-290 (SN: 016-1705)
EXISTING CROSS SECTIONS (5 OF 7)

SCALE: | SHEET OF SHEETS | STA. TO STA.

VAR. RTE.	SECTION	COUNTY	TOTAL SHEETS	SHEET NO.
VAR.	FAI VARIOUS BRIDGE SEALING	COOK	75	36
		CONTRACT NO. 62U35		
		ILLINOIS	FED. AID PROJECT	

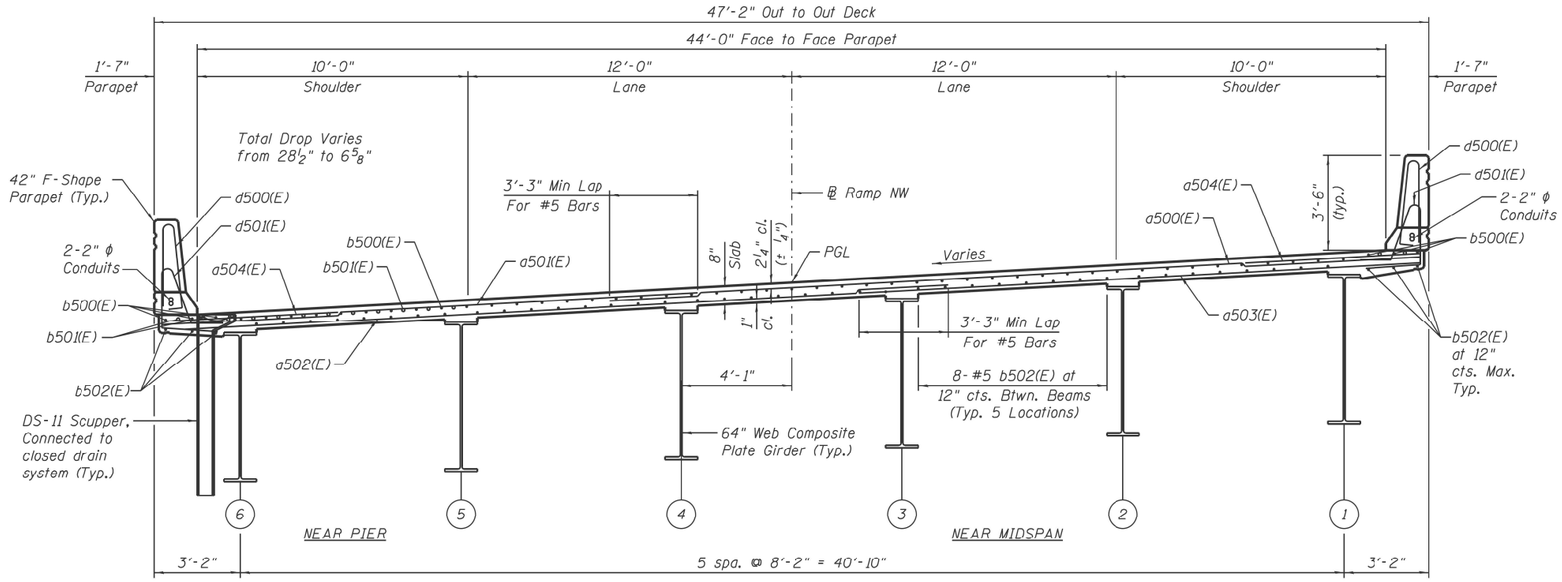

DECK CROSS SECTION - UNIT V

(Looking Upstation)
(Dimensions measured perpendicular to baseline)

FOR INFORMATION ONLY

MODEL: Default
FILE NAME: pw:\\ildot-pw.bentley.com:PWIDOT\Documents\IDOT Offices\District 1\Projects\Circle Int\CADData\Design-Sht-Plan1.dgn

USER NAME = naveed.hassan	DESIGNED -	REVISED -	STATE OF ILLINOIS DEPARTMENT OF TRANSPORTATION
	DRAWN -	REVISED -	
PLOT SCALE = 100.0000 ' / in.	CHECKED -	REVISED -	
PLOT DATE = 12/19/2022	DATE -	REVISED -	

LOCATION 7: RAMP FROM NB I-90/94 TO WB I-290 (SN: 016-1705)
EXISTING CROSS SECTIONS (6 OF 7)

SCALE: | SHEET OF SHEETS | STA. TO STA.

VAR. RTE.	SECTION	COUNTY	TOTAL SHEETS	SHEET NO.
VAR.	FAI VARIOUS BRIDGE SEALING	COOK	75	37
		CONTRACT NO. 62U35		
		ILLINOIS	FED. AID PROJECT	

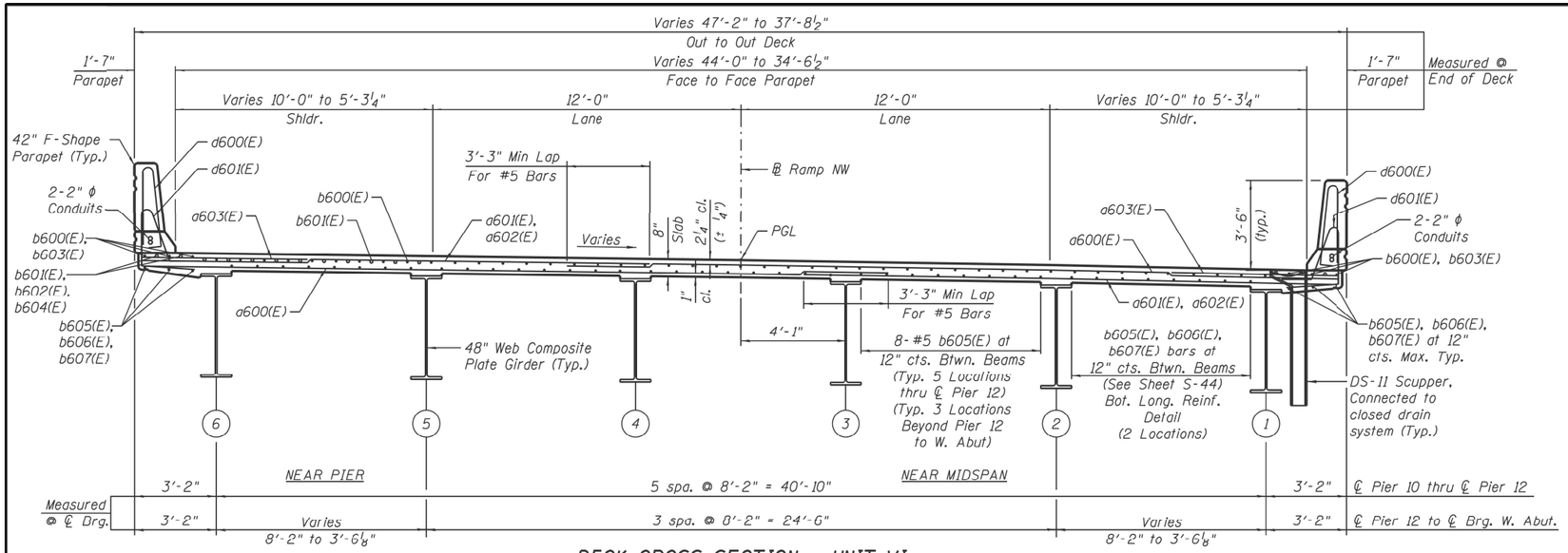

DECK CROSS SECTION - UNIT VI

(Looking Upstation)
(Dimensions measured perpendicular to baseline)

FOR INFORMATION ONLY

MODEL: Default
FILE NAME: pw:\\ildot-pw.bentley.com:PWIDOT\Documents\IDOT Offices\District 1\Projects\Circle Int\CADData\Design-Build\sht-dsn1.dgn

USER NAME = naveed.hassan	DESIGNED -	REVISED -	STATE OF ILLINOIS DEPARTMENT OF TRANSPORTATION
	DRAWN -	REVISED -	
PLOT SCALE = 100.0000 ' / in.	CHECKED -	REVISED -	
PLOT DATE = 12/19/2022	DATE -	REVISED -	

LOCATION 7: RAMP FROM NB I-90/94 TO WB I-290 (SN: 016-1705)
EXISTING CROSS SECTIONS (7 OF 7)

SCALE: | SHEET OF SHEETS | STA. TO STA.

VAR. RTE.	SECTION	COUNTY	TOTAL SHEETS	SHEET NO.
VAR.	FAI VARIOUS BRIDGE SEALING	COOK	75	38
		CONTRACT NO. 62U35		
		ILLINOIS	FED. AID PROJECT	

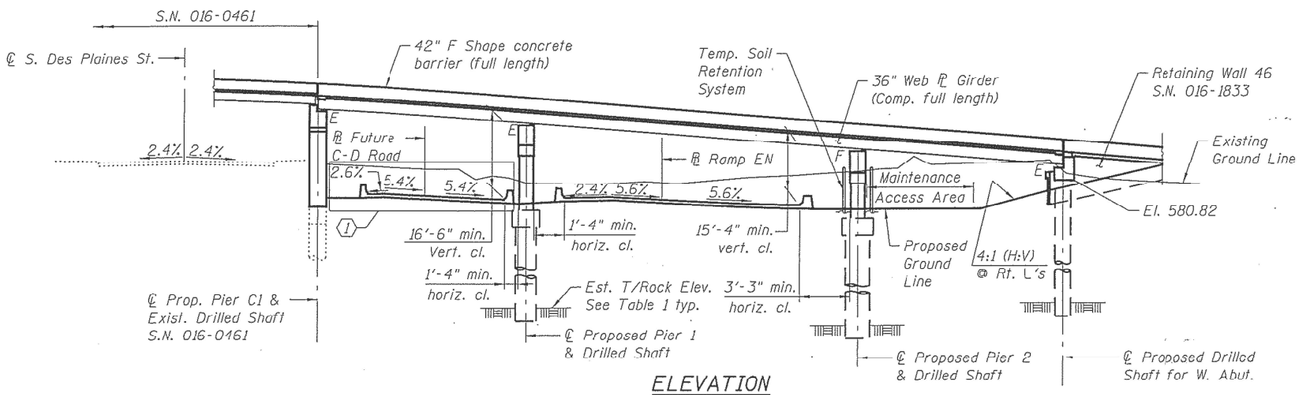

ELEVATION

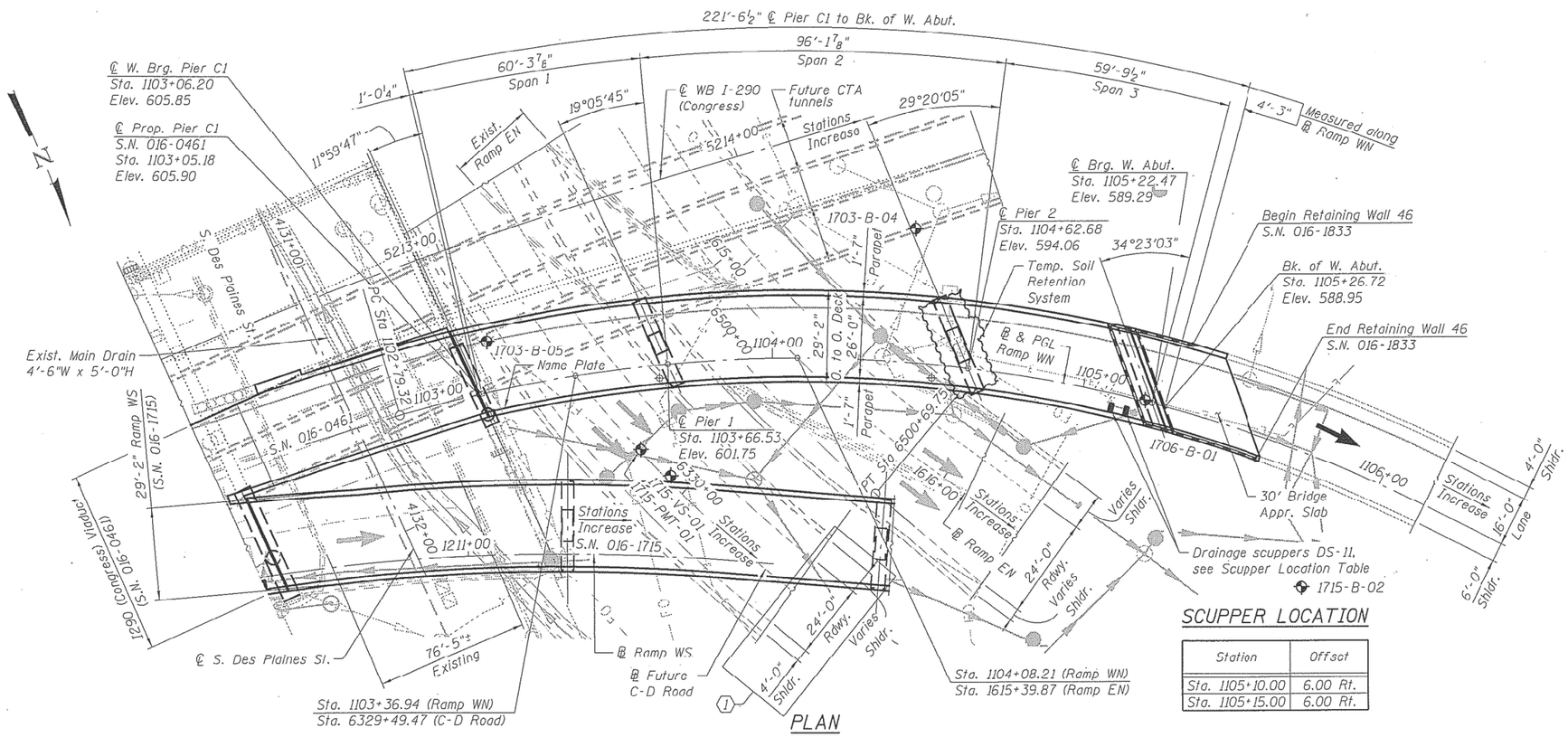

PLAN

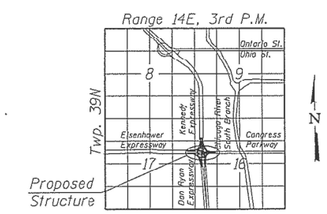

LOCATION SKETCH

SCUPPER LOCATION

Station	Offset
Sta. 1105+10.00	6.00 Rt.
Sta. 1105+15.00	6.00 Rt.

GENERAL PLAN & ELEVATION
RAMP WN OVER
I-90/94 C-D ROAD/RAMP EN
F.A.I. RTE. 90/94/290
SECTION 2014-013R&B-R
COOK COUNTY
STATION 1104+08.21
STRUCTURE NO. 016-1706

FOR INFORMATION ONLY

MODEL: Default
FILE NAME: pw:\\ildot-pw.bentley.com:PWIDOT\Documents\IDOT Offices\District 1\Projects\Circle Int\CADData\Designs\H-1\ex2.dgn

USER NAME = naveed.hassan	DESIGNED -	REVISED -	STATE OF ILLINOIS DEPARTMENT OF TRANSPORTATION
	DRAWN -	REVISED -	
PLOT SCALE = 100.0000 ' / in.	CHECKED -	REVISED -	
PLOT DATE = 12/19/2022	DATE -	REVISED -	

LOCATION 8: WB IDA B. WELLS DR. TO NB I-90/94 (SN: 016-1706)
EXISTING PLAN & ELEVATIONS

SCALE: | SHEET OF SHEETS | STA. TO STA.

VAR. RTE.	SECTION	COUNTY	TOTAL SHEETS	SHEET NO.
VAR.	FAI VARIOUS BRIDGE SEALING	COOK	75	39
		CONTRACT NO. 62U35		
	ILLINOIS	FED. AID PROJECT		

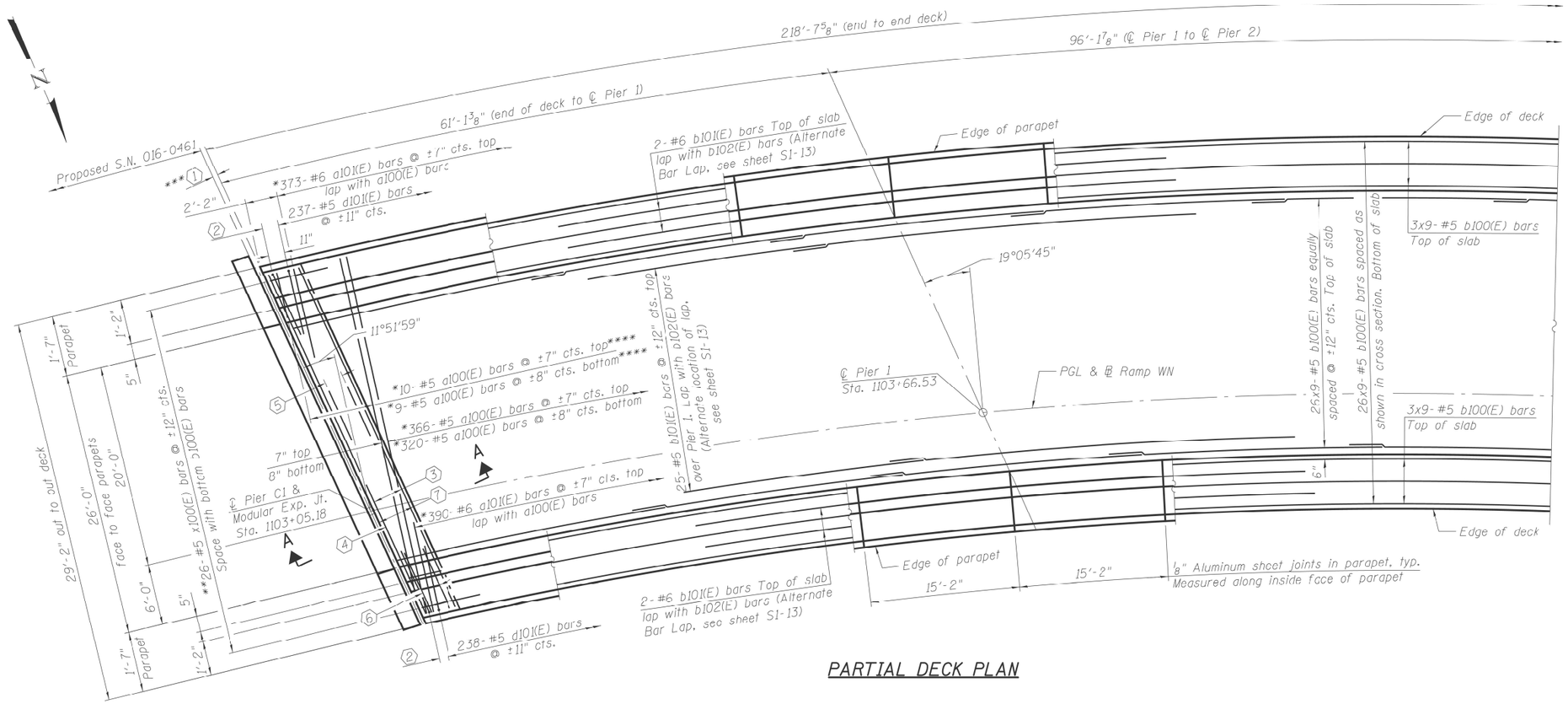

PARTIAL DECK PLAN

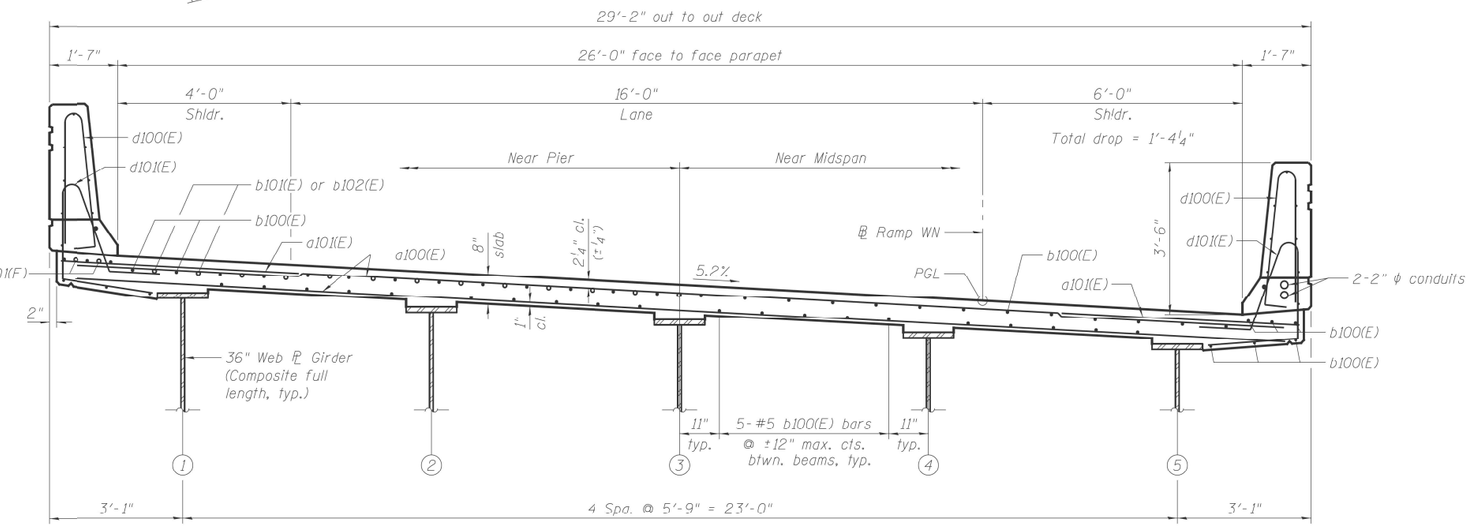

CROSS SECTION

(Looking upstation)

FOR INFORMATION ONLY

MODEL: Default
FILE NAME: pw:\\ildot-pw.bentley.com:PWIDOT\Documents\IDOT Offices\District 1\Projects\Circle Int\CADData\Design-Build\Plan2.dgn

USER NAME = naveed.hassan	DESIGNED -	REVISED -	STATE OF ILLINOIS DEPARTMENT OF TRANSPORTATION
	DRAWN -	REVISED -	
PLOT SCALE = 100.0000 ' / in.	CHECKED -	REVISED -	
PLOT DATE = 12/19/2022	DATE -	REVISED -	

LOCATION 8: WB IDA B. WELLS DR. TO NB I-90/94 (SN: 016-1706)
EXISTING CROSS SECTIONS

SCALE: | SHEET OF SHEETS | STA. TO STA.

VAR. RTE.	SECTION	COUNTY	TOTAL SHEETS	SHEET NO.
VAR.	FAI VARIOUS BRIDGE SEALING	COOK	75	40
		CONTRACT NO. 62U35		
		ILLINOIS	FED. AID PROJECT	

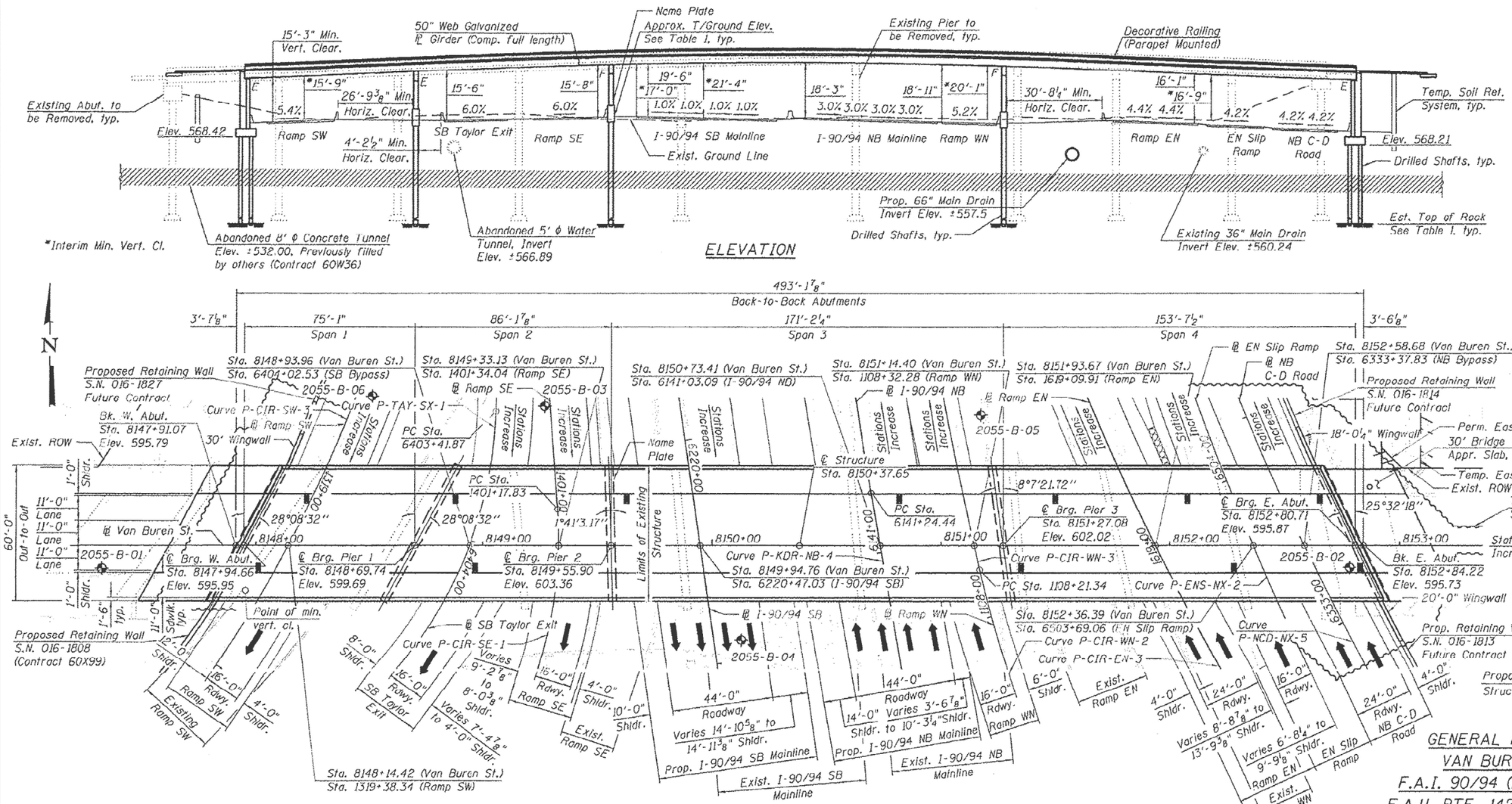

GENERAL PLAN & ELEVATION
VAN BUREN STREET OVER
F.A.I. 90/94 (KENNEDY EXPRESSWAY)
F.A.U. RTE. 1423 - SECTION 2014-017B
COOK COUNTY
STATION 8150+37.65
STRUCTURE NO. 016-1707

FOR INFORMATION ONLY

MODEL: Default
FILE NAME: pw:\\ildot-pw.bentley.com:PWIDOT\Documents\IDOT Offices\District 1\Projects\Circle Int\CADData\Design-sht-plan2.dgn

USER NAME = naveed.hassan	DESIGNED -	REVISED -	STATE OF ILLINOIS DEPARTMENT OF TRANSPORTATION
	DRAWN -	REVISED -	
PLOT SCALE = 100.0000 ' / in.	CHECKED -	REVISED -	
PLOT DATE = 12/19/2022	DATE -	REVISED -	

LOCATION 9: VAN BUREN ST. OVER I-90/94 (SN: 016-1707)
EXISTING PLAN & ELEVATION

SCALE: | SHEET OF SHEETS | STA. TO STA.

VAR. RTE.	SECTION	COUNTY	TOTAL SHEETS	SHEET NO.
VAR.	FAI VARIOUS BRIDGE SEALING	COOK	75	41
		CONTRACT NO. 62U35		
	ILLINOIS	FED. AID PROJECT		

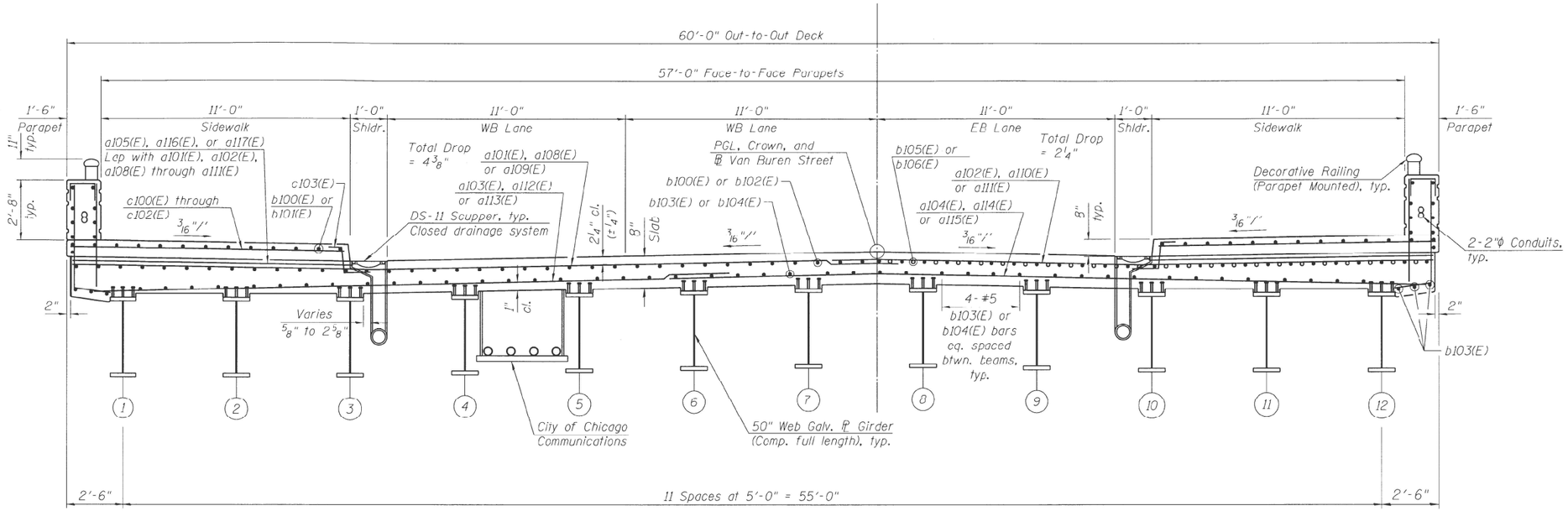

NEAR MIDSPAN **NEAR PIER**

CROSS SECTION

(Looking East)

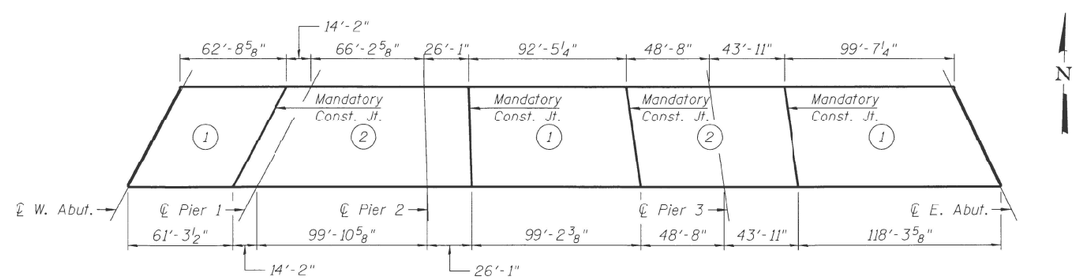

POURING SEQUENCE

FOR INFORMATION ONLY

MODEL: Default
FILE NAME: pw:\\ildot-pw.bentley.com:PWIDOT\Documents\IDOT Offices\District 1\Projects\Circle Int\CADData\Design-Int-Ramp.dgn

USER NAME = naveed.hassan	DESIGNED -	REVISED -	STATE OF ILLINOIS DEPARTMENT OF TRANSPORTATION
	DRAWN -	REVISED -	
PLOT SCALE = 100.0000 ' / in.	CHECKED -	REVISED -	
PLOT DATE = 12/19/2022	DATE -	REVISED -	

LOCATION 9: VAN BUREN ST. OVER I-90/94 (SN: 016-1707)
EXISTING CROSS SECTIONS

SCALE: SHEET OF SHEETS STA. TO STA.

VAR. RTE.	SECTION	COUNTY	TOTAL SHEETS	SHEET NO.
VAR.	FAI VARIOUS BRIDGE SEALING	COOK	75	42
		CONTRACT NO. 62U35		
	ILLINOIS	FED. AID PROJECT		

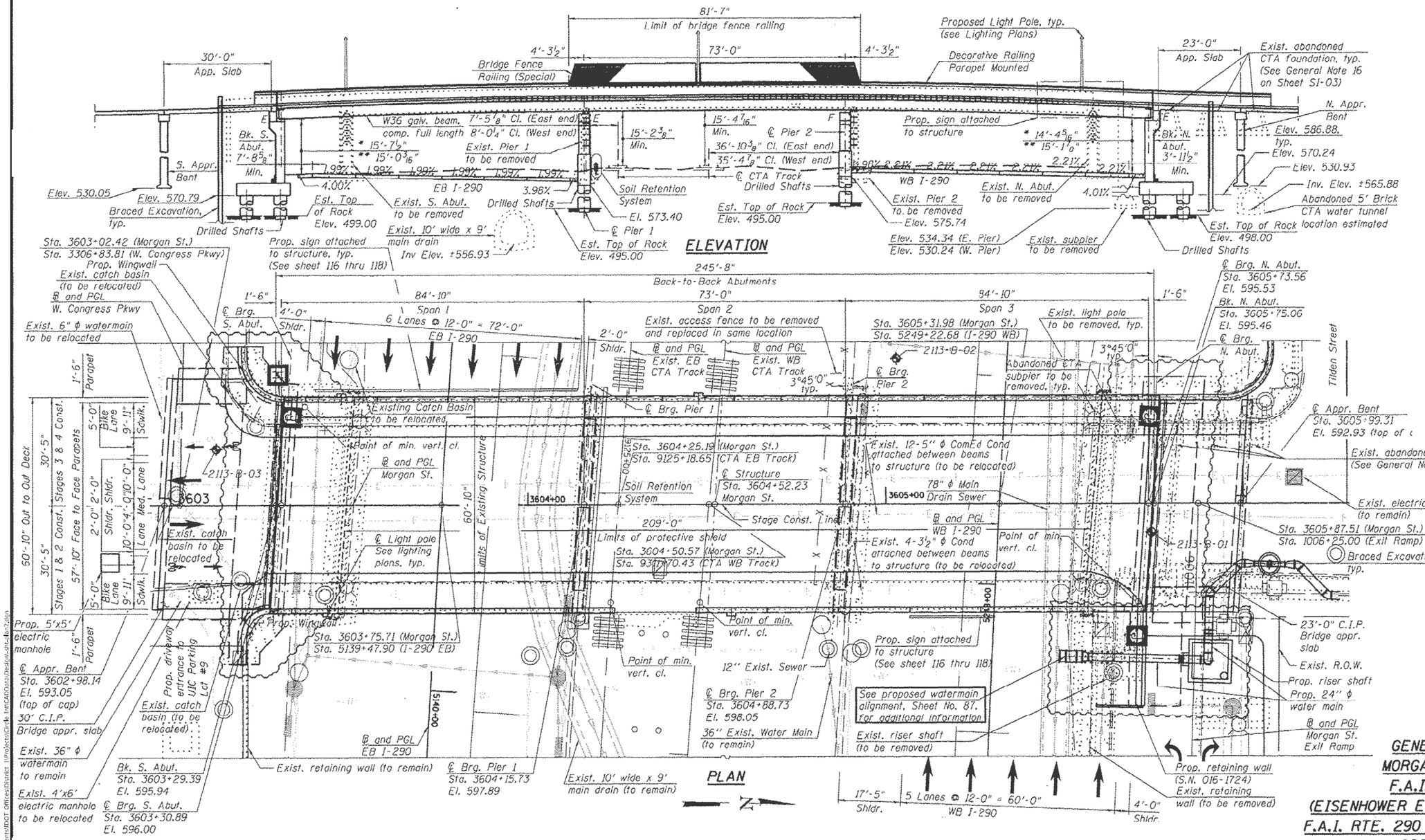

GENERAL PLAN
MORGAN ST. OVER
F.A.I. RTE. 290
(EISENHOWER EXPRESSWAY) AND CTA
F.A.I. RTE. 290 - SECTION 2013-007R
COOK COUNTY
STATION 3604+52.23
STRUCTURE NO. 016-1709

FOR INFORMATION ONLY

MODEL: Default
FILE NAME: pw:\\ildot-pw.bentley.com:PWIDOT\Documents\IDOT Offices\District 1\Projects\Circle Int\CADData\Design-Sht-Mod\2.dgn

USER NAME = naveed.hassan	DESIGNED -	REVISED -	STATE OF ILLINOIS DEPARTMENT OF TRANSPORTATION
	DRAWN -	REVISED -	
PLOT SCALE = 100.0000 ' / in.	CHECKED -	REVISED -	
PLOT DATE = 12/19/2022	DATE -	REVISED -	

LOCATION 10: MORGAN ST. OVER I-290 (SN: 016-1709)
EXISTING PLAN & ELEVATION

SCALE: | SHEET OF SHEETS | STA. TO STA.

VAR. RTE.	SECTION	COUNTY	TOTAL SHEETS	SHEET NO.
VAR.	FAI VARIOUS BRIDGE SEALING	COOK	75	43
		CONTRACT NO. 62U35		
		ILLINOIS FED. AID PROJECT		

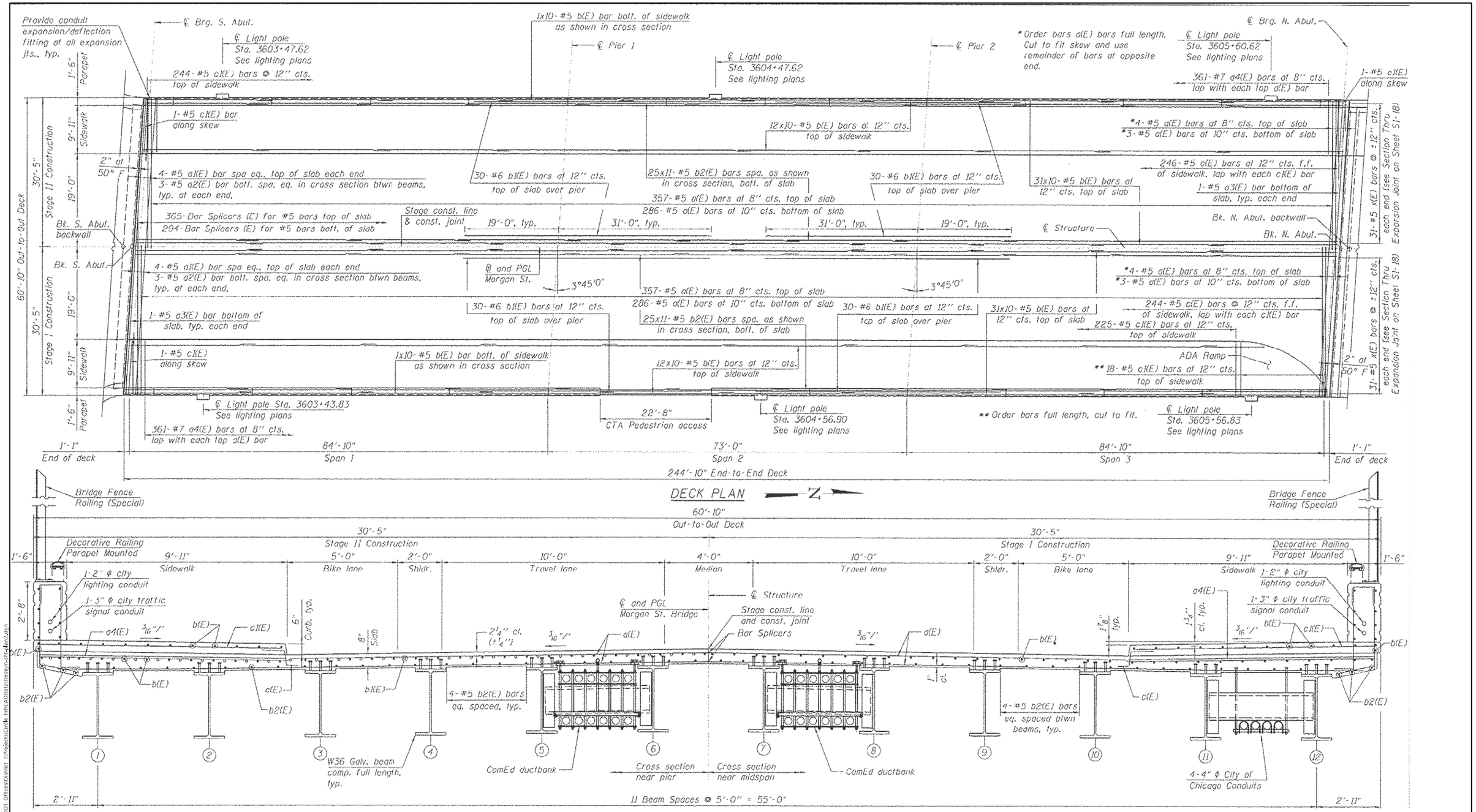

FOR INFORMATION ONLY

MODEL: Default
FILE NAME: pw:\\ildot-pw.bentley.com:PWIDOT\Documents\IDOT Offices\District 1\Projects\Cicero Int\CADData\Design-Site-Rev2.dgn

USER NAME = naveed.hassan	DESIGNED -	REVISED -	STATE OF ILLINOIS DEPARTMENT OF TRANSPORTATION
	DRAWN -	REVISED -	
PLOT SCALE = 100.0000 ' / in.	CHECKED -	REVISED -	
PLOT DATE = 12/19/2022	DATE -	REVISED -	

LOCATION 10: MORGAN ST. OVER I-290 (SN: 016-1709)
EXISTING CROSS SECTIONS

SCALE: | SHEET OF SHEETS | STA. TO STA.

VAR. RTE.	SECTION	COUNTY	TOTAL SHEETS	SHEET NO.
VAR.	FAI VARIOUS BRIDGE SEALING	COOK	75	44
		CONTRACT NO. 62U35		
		ILLINOIS FED. AID PROJECT		

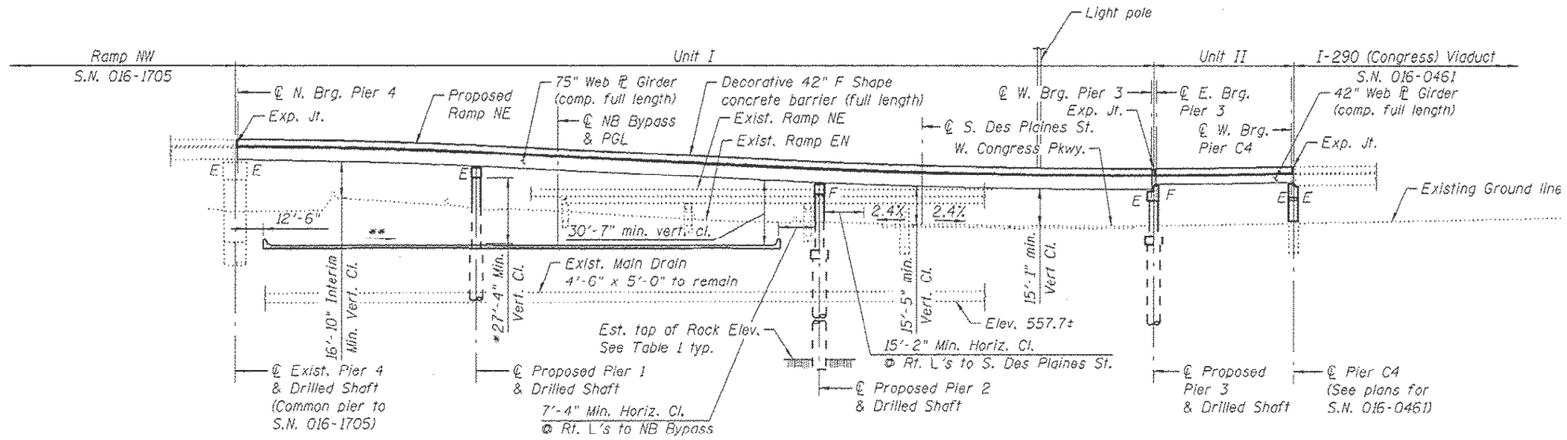

ELEVATION

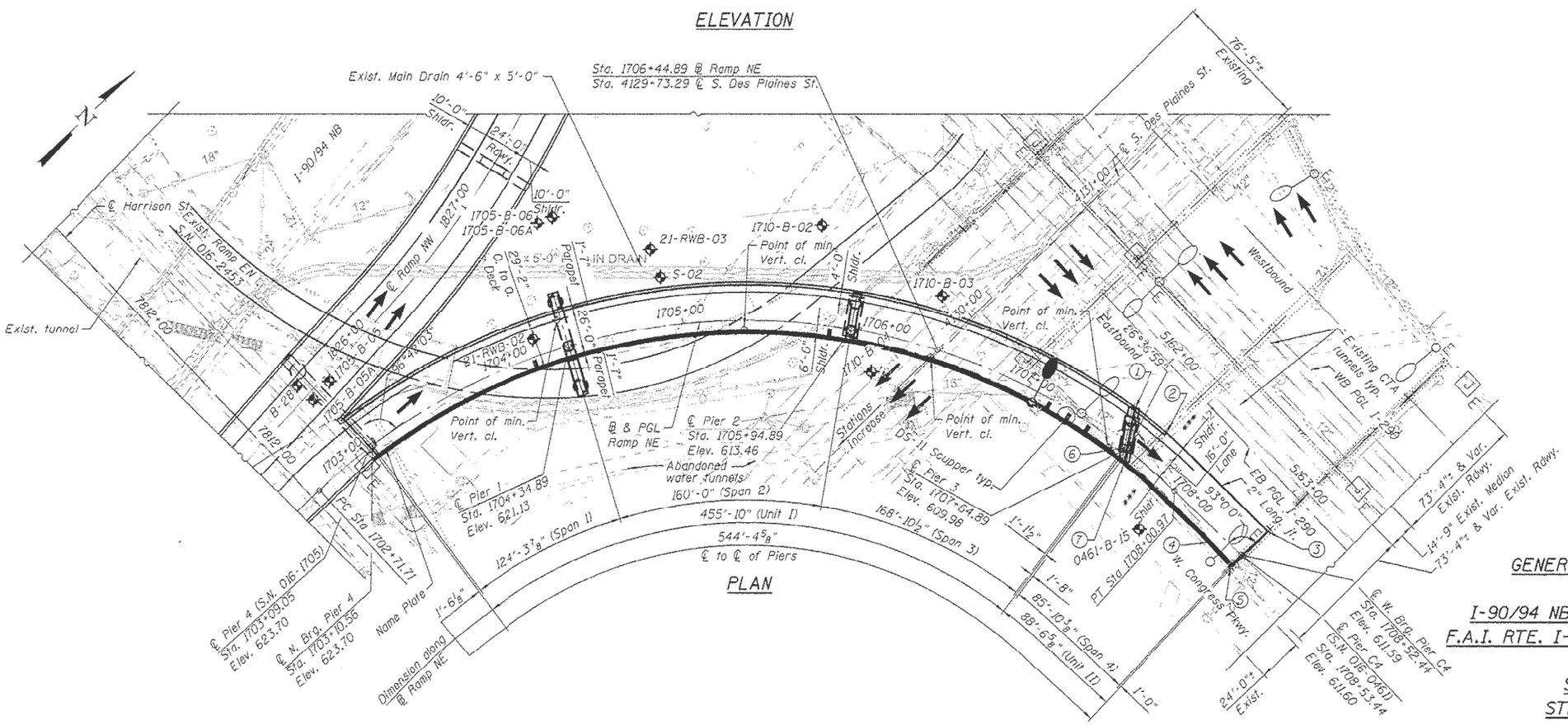

PLAN

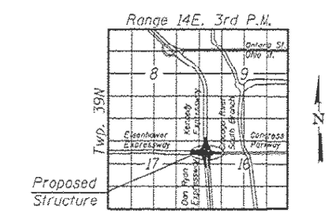

LOCATION SKETCH

GENERAL PLAN AND ELEVATION
RAMP NE OVER
I-90/94 NB BYPASS/S. DES PLAINES ST.
F.A.I. RTE. I-90/94 - SECTION 2015-080 R&B
COOK COUNTY
STATION 1704+73.63
STRUCTURE NO. 016-1710

FOR INFORMATION ONLY

MODEL: Default
FILE NAME: pw:\\ildot-pw.bentley.com:PWIDOT\Documents\IDOT Offices\District 1\Projects\Circle Int\CADData\Design-Ohl&Ram2.dgn

USER NAME = naveed.hassan	DESIGNED -	REVISED -	STATE OF ILLINOIS DEPARTMENT OF TRANSPORTATION
	DRAWN -	REVISED -	
PLOT SCALE = 100.0000 ' / in.	CHECKED -	REVISED -	
PLOT DATE = 12/19/2022	DATE -	REVISED -	

LOCATION 11: RAMP FROM NB I-90/94 TO EB I-290 (SN: 016-01710)
EXISTING PLAN & ELEVATION

SCALE: | SHEET OF SHEETS | STA. TO STA.

VAR. RTE.	SECTION	COUNTY	TOTAL SHEETS	SHEET NO.
VAR.	FAI VARIOUS BRIDGE SEALING	COOK	75	45
		CONTRACT NO. 62U35		
		ILLINOIS FED. AID PROJECT		

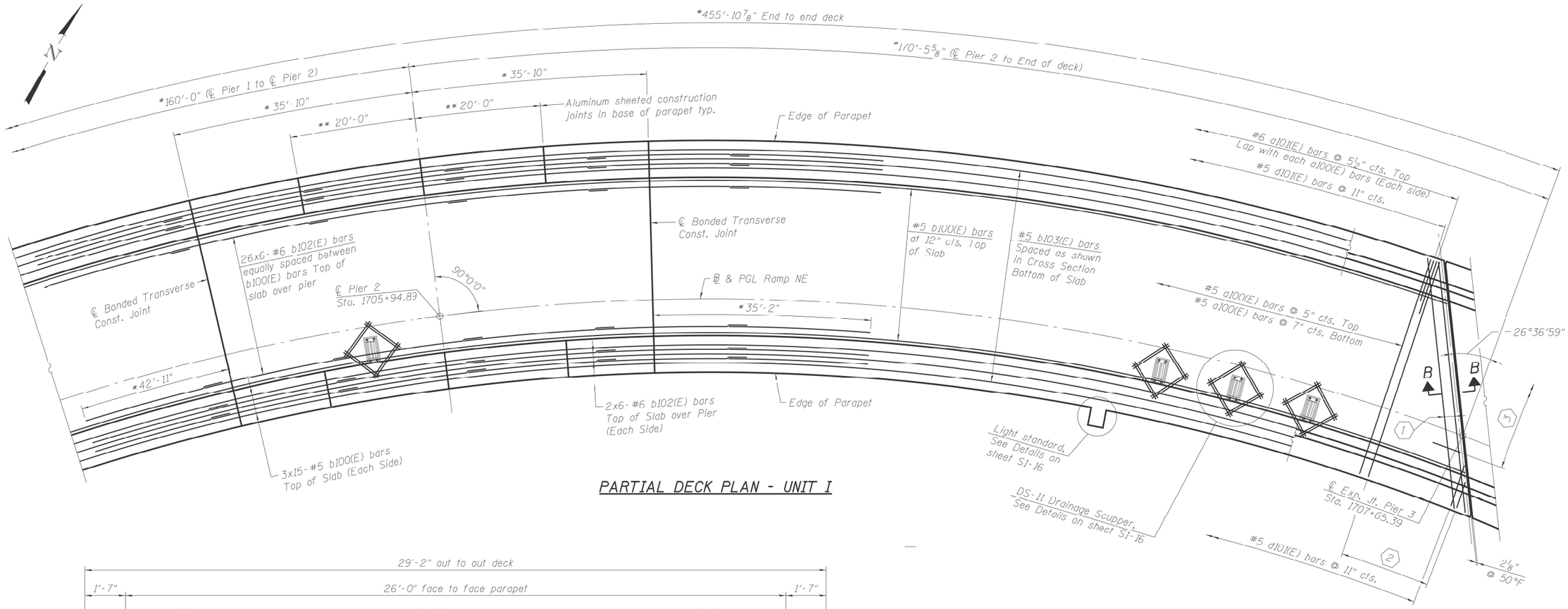

PARTIAL DECK PLAN - UNIT I

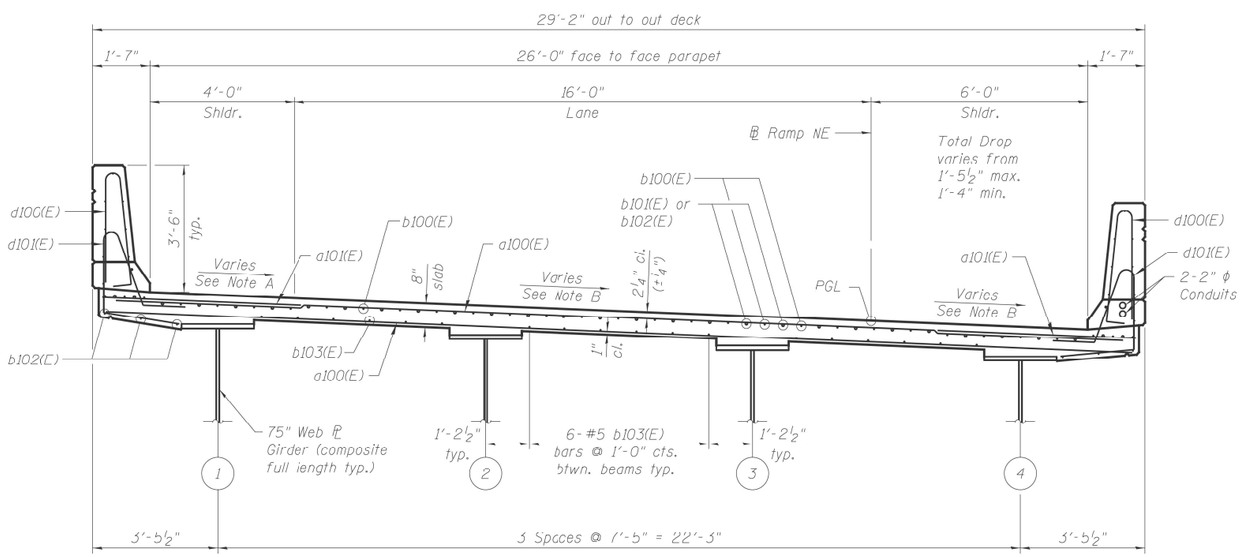

CROSS SECTION - UNIT I
(Looking upstation)

FOR INFORMATION ONLY

MODEL: Default
FILE NAME: pw:\\ildot-pw.bentley.com:PWIDOT\Documents\IDOT Offices\District 1\Projects\Grant Int\CADData\Design-Int-Rm2.dgn

USER NAME = naveed.hassan	DESIGNED -	REVISED -	
	DRAWN -	REVISED -	
PLOT SCALE = 100.0000 ' / in.	CHECKED -	REVISED -	
PLOT DATE = 12/19/2022	DATE -	REVISED -	

STATE OF ILLINOIS
DEPARTMENT OF TRANSPORTATION

LOCATION 11: RAMP FROM NB I-90/94 TO EB I-290 (SN: 016-01710)
EXISTING CROSS SECTIONS (1 OF 2)

SCALE: | SHEET OF SHEETS | STA. TO STA.

VAR. RTE.	SECTION	COUNTY	TOTAL SHEETS	SHEET NO.
VAR.	FAI VARIOUS BRIDGE SEALING	COOK	75	46
		CONTRACT NO. 62U35		
		ILLINOIS	FED. AID PROJECT	

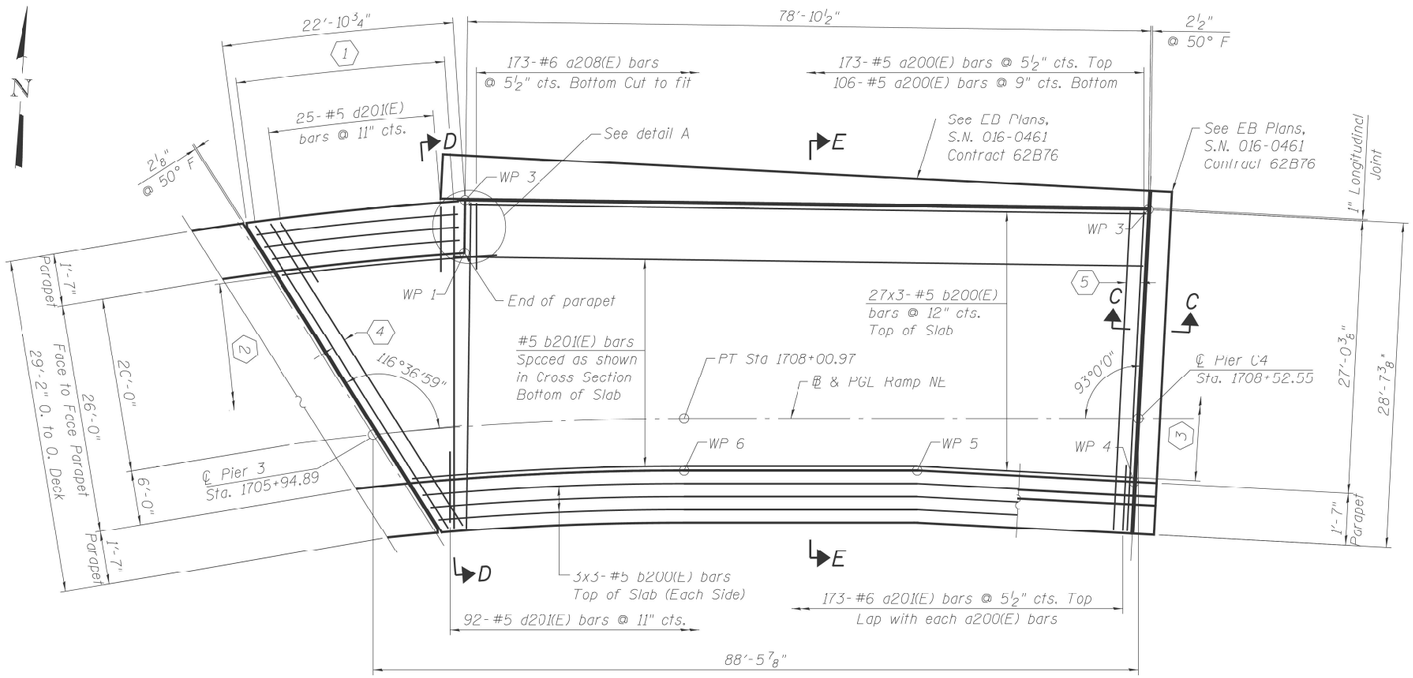

DECK PLAN - UNIT II

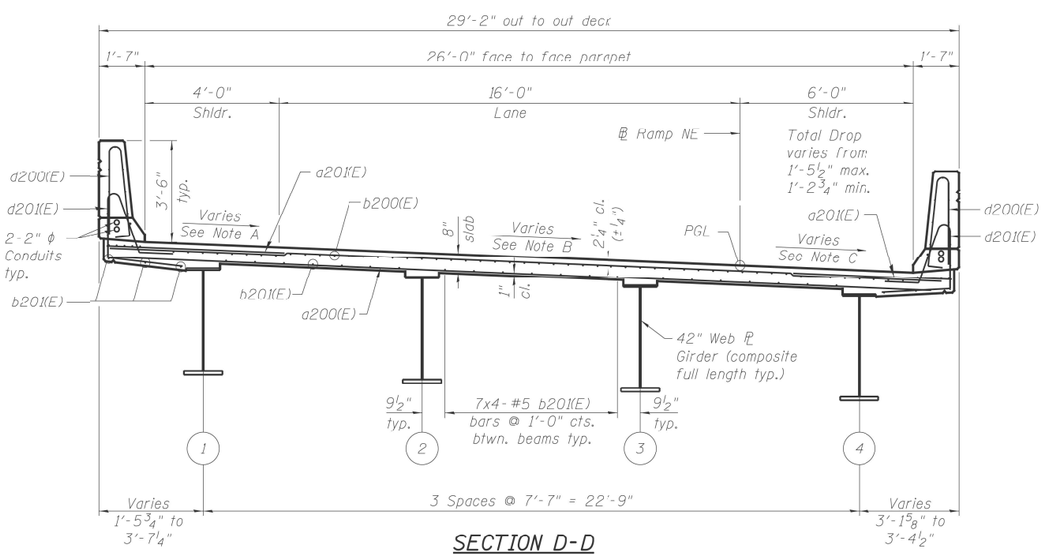

SECTION D-D

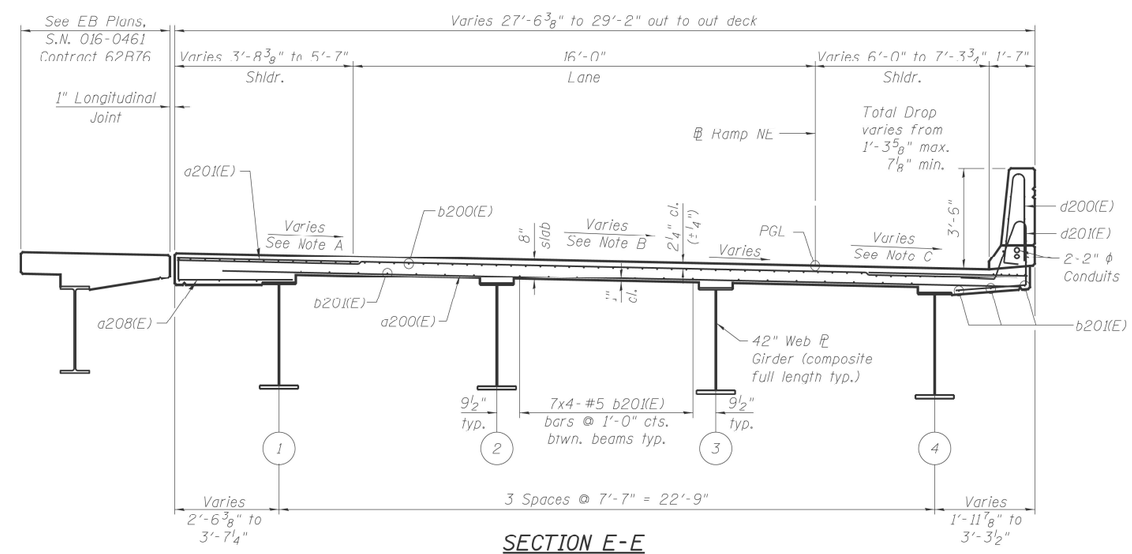

SECTION E-E

FOR INFORMATION ONLY

MODEL: Default
FILE NAME: pw:\\illinois-pw.bentley.com:PWIDOT\Documents\IDOT Offices\District 1\Projects\Circle Int\CADData\Design-Site-Alin2.dgn

USER NAME = naveed.hassan	DESIGNED -	REVISED -	
	DRAWN -	REVISED -	
PLOT SCALE = 100.0000 ' / in.	CHECKED -	REVISED -	
PLOT DATE = 12/19/2022	DATE -	REVISED -	

STATE OF ILLINOIS
DEPARTMENT OF TRANSPORTATION

LOCATION 11: RAMP FROM NB I-90/94 TO EB I-290 (SN: 016-01710)
EXISTING CROSS SECTIONS (2 OF 2)

SCALE: | SHEET OF SHEETS | STA. TO STA.

VAR. RTE.	SECTION	COUNTY	TOTAL SHEETS	SHEET NO.
VAR.	FAI VARIOUS BRIDGE SEALING	COOK	75	47
		CONTRACT NO. 62U35		
		ILLINOIS FED. AID PROJECT		

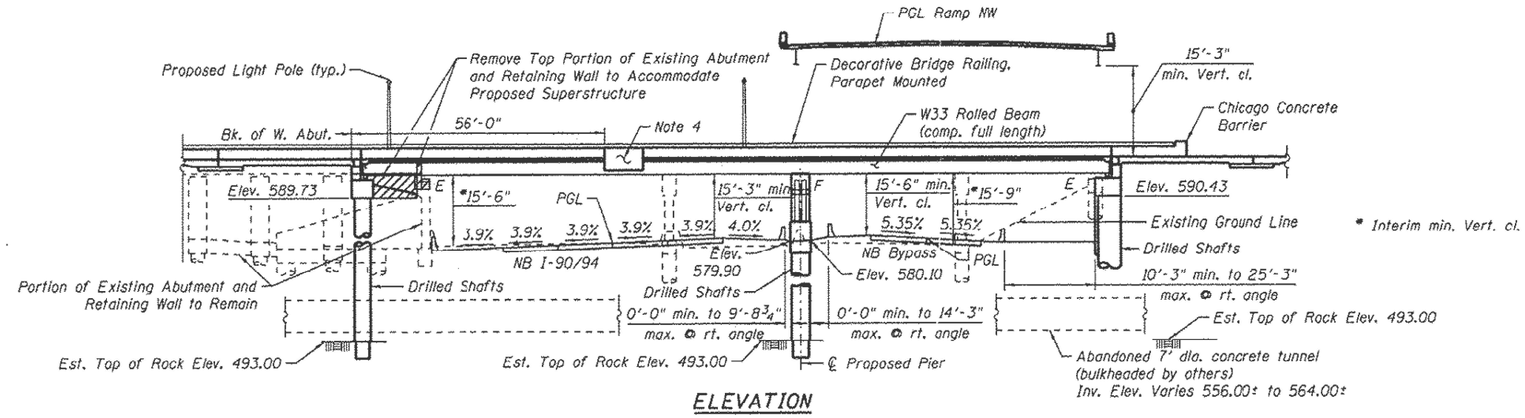

ELEVATION

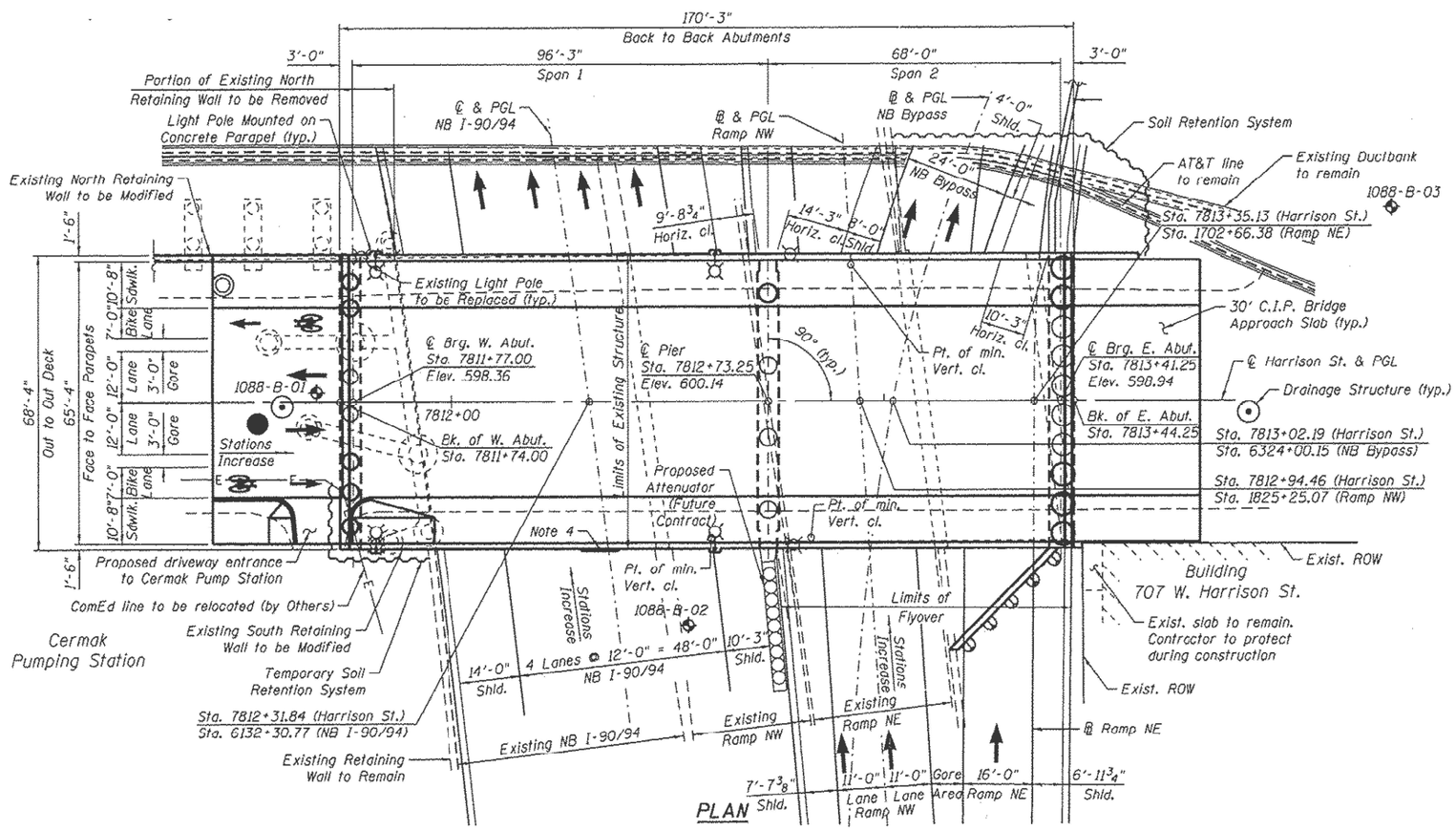

PLAN

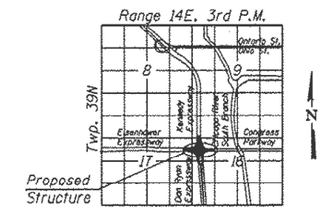

LOCATION SKETCH

GENERAL PLAN & ELEVATION
HARRISON ST. OVER
F.A.I. RTE. NB 90/94
(DAN RYAN EXPRESSWAY)
F.A.I. RTE. 90/94/290 - SECTION 2013-036R
COOK COUNTY
STATION 7812+31.84
STRUCTURE NO. 016-1711

FOR INFORMATION ONLY

MODEL: Default
FILE NAME: pw:\\ildot-pw.bentley.com:PWIDOT\Documents\IDOT Offices\District 1\Projects\Circle Int\CADData\Design-Int-Ill-2.dgn

USER NAME = naveed.hassan	DESIGNED -	REVISED -	
	DRAWN -	REVISED -	
PLOT SCALE = 100.0000 ' / in.	CHECKED -	REVISED -	
PLOT DATE = 12/19/2022	DATE -	REVISED -	

STATE OF ILLINOIS
DEPARTMENT OF TRANSPORTATION

LOCATION 12: HARRISON ST. OVER NB I-90/94 (SN: 016-1711)
EXISTING PLAN & ELEVATION

SCALE: | SHEET OF SHEETS | STA. TO STA.

VAR. RTE.	SECTION	COUNTY	TOTAL SHEETS	SHEET NO.
VAR.	FAI VARIOUS BRIDGE SEALING	COOK	75	48
		CONTRACT NO. 62U35		
		ILLINOIS	FED. AID PROJECT	

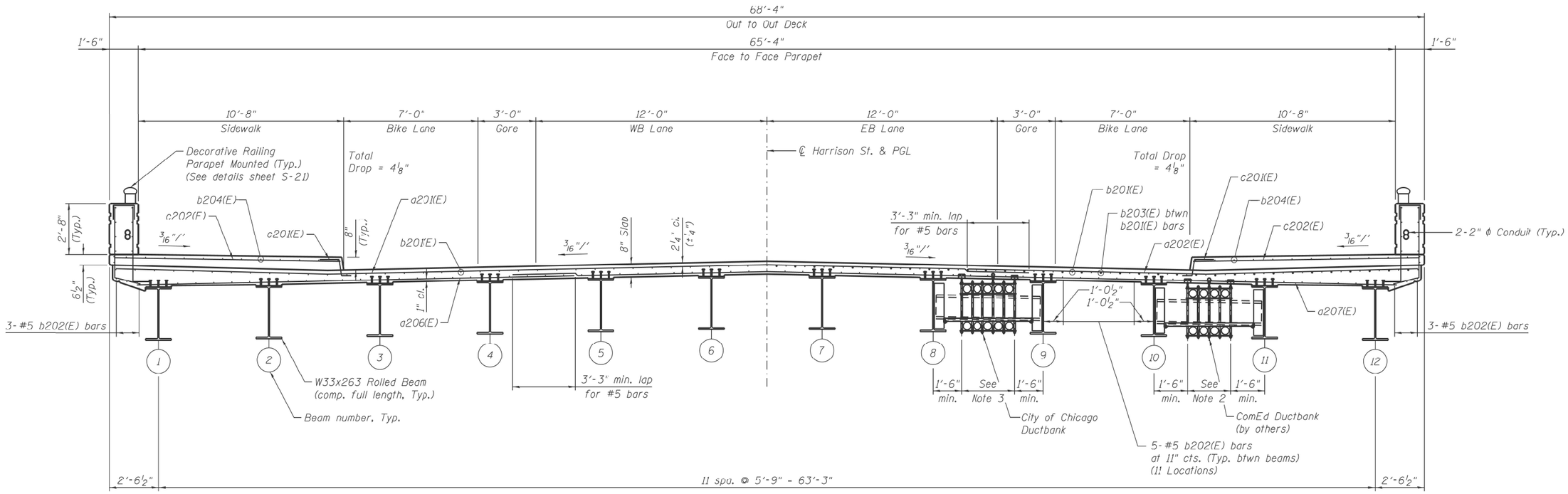

DECK CROSS SECTION
(Facing East)

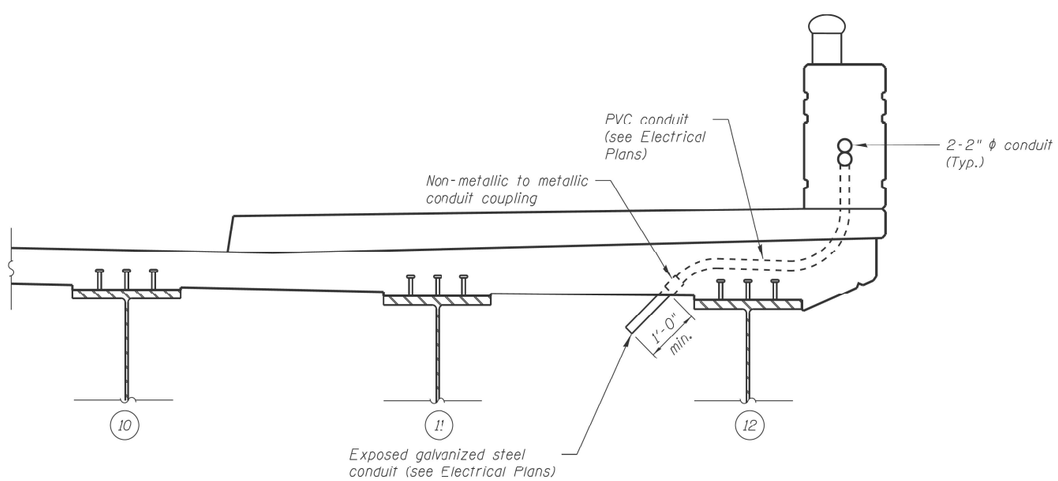

CONDUIT EMBEDDED IN DECK DETAIL

FOR INFORMATION ONLY

MODEL: Default
FILE NAME: pw:\\ildot-pw.bentley.com:PWIDOT\Documents\IDOT Offices\District 1\Projects\Circle Int\CADData\Design-Build\n2.dgn

USER NAME = naveed.hassan	DESIGNED -	REVISED -	STATE OF ILLINOIS DEPARTMENT OF TRANSPORTATION
	DRAWN -	REVISED -	
PLOT SCALE = 100.0000 ' / in.	CHECKED -	REVISED -	
PLOT DATE = 12/19/2022	DATE -	REVISED -	

LOCATION 12: HARRISON ST. OVER NB I-90/94 (SN: 016-1711)
EXISTING CROSS SECTION

SCALE: | SHEET OF SHEETS | STA. TO STA.

VAR. RTE.	SECTION	COUNTY	TOTAL SHEETS	SHEET NO.
VAR.	FAI VARIOUS BRIDGE SEALING	COOK	75	49
		CONTRACT NO. 62U35		
	ILLINOIS	FED. AID PROJECT		

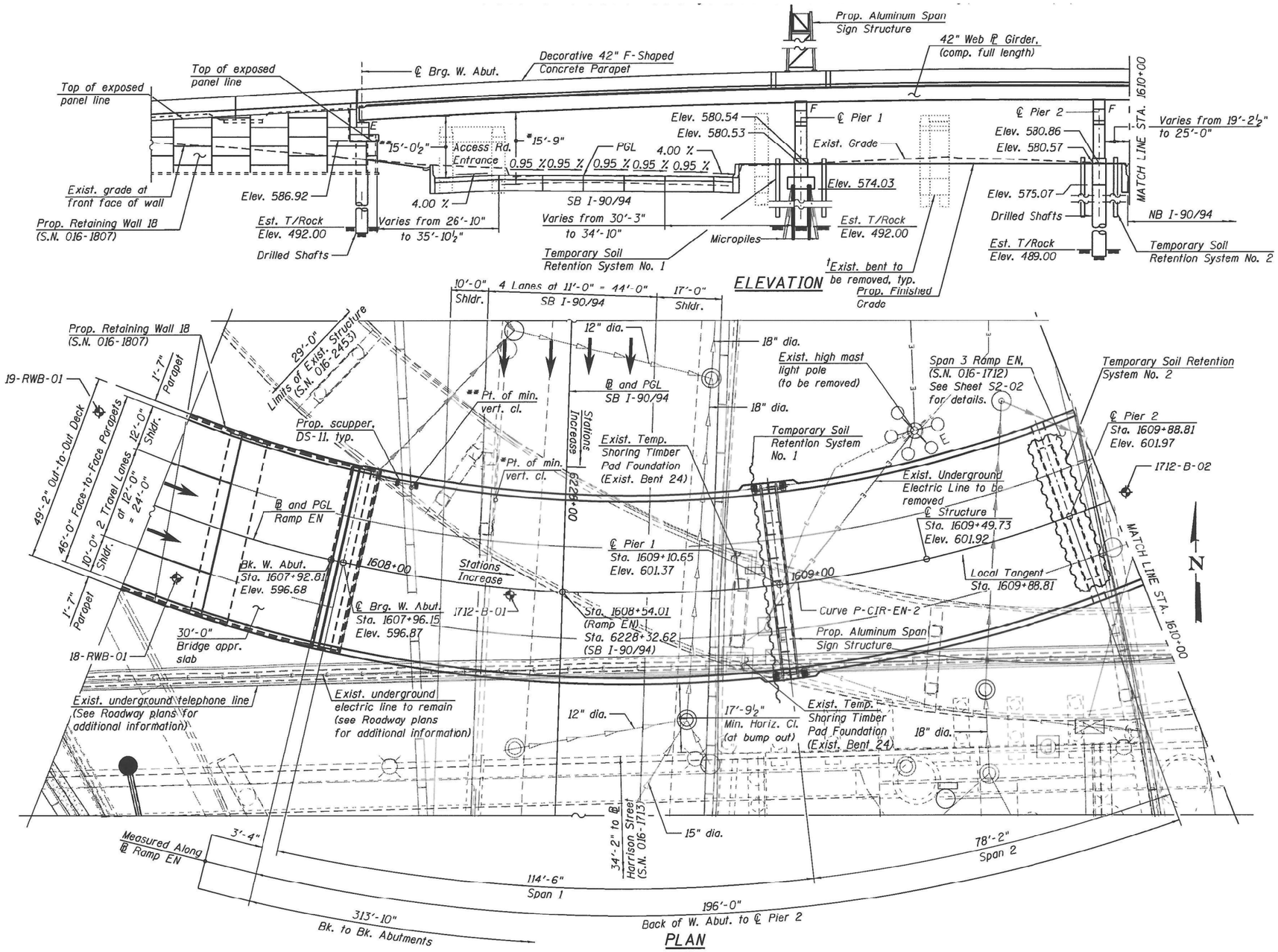

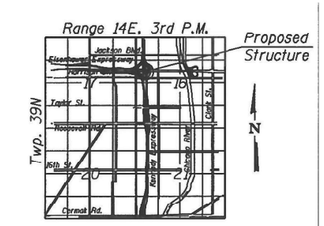

GENERAL PLAN AND ELEVATION I
RAMP EN OVER F.A.I. RTE. 90/94
(DAN RYAN EXPRESSWAY)
F.A.I. RTE. 90/94/290 - SECTION 2014-005R&B
COOK COUNTY
STATION 1609+49.73
STRUCTURE NO. 016-1712

FOR INFORMATION ONLY

MODEL: Default
FILE NAME: pw:\\ildot-pw.bentley.com:PWIDOT\Documents\IDOT Offices\District 1\Projects\Circle Int\CADData\Design-sht-Ramp2.dgn

USER NAME = naveed.hassan	DESIGNED -	REVISED -	
	DRAWN -	REVISED -	
PLOT SCALE = 100.0000 ' / in.	CHECKED -	REVISED -	
PLOT DATE = 12/19/2022	DATE -	REVISED -	

STATE OF ILLINOIS
DEPARTMENT OF TRANSPORTATION

LOCATION 13: RAMP FROM I-290 EB TO NB I-90/94 (SN: 016-1712)
EXISTING PLAN & ELEVATION (1 OF 2)

SCALE: | SHEET OF SHEETS | STA. TO STA.

VAR. RTE.	SECTION	COUNTY	TOTAL SHEETS	SHEET NO.
VAR.	FAI VARIOUS BRIDGE SEALING	COOK	75	50
		CONTRACT NO. 62U35		
	ILLINOIS	FED. AID PROJECT		

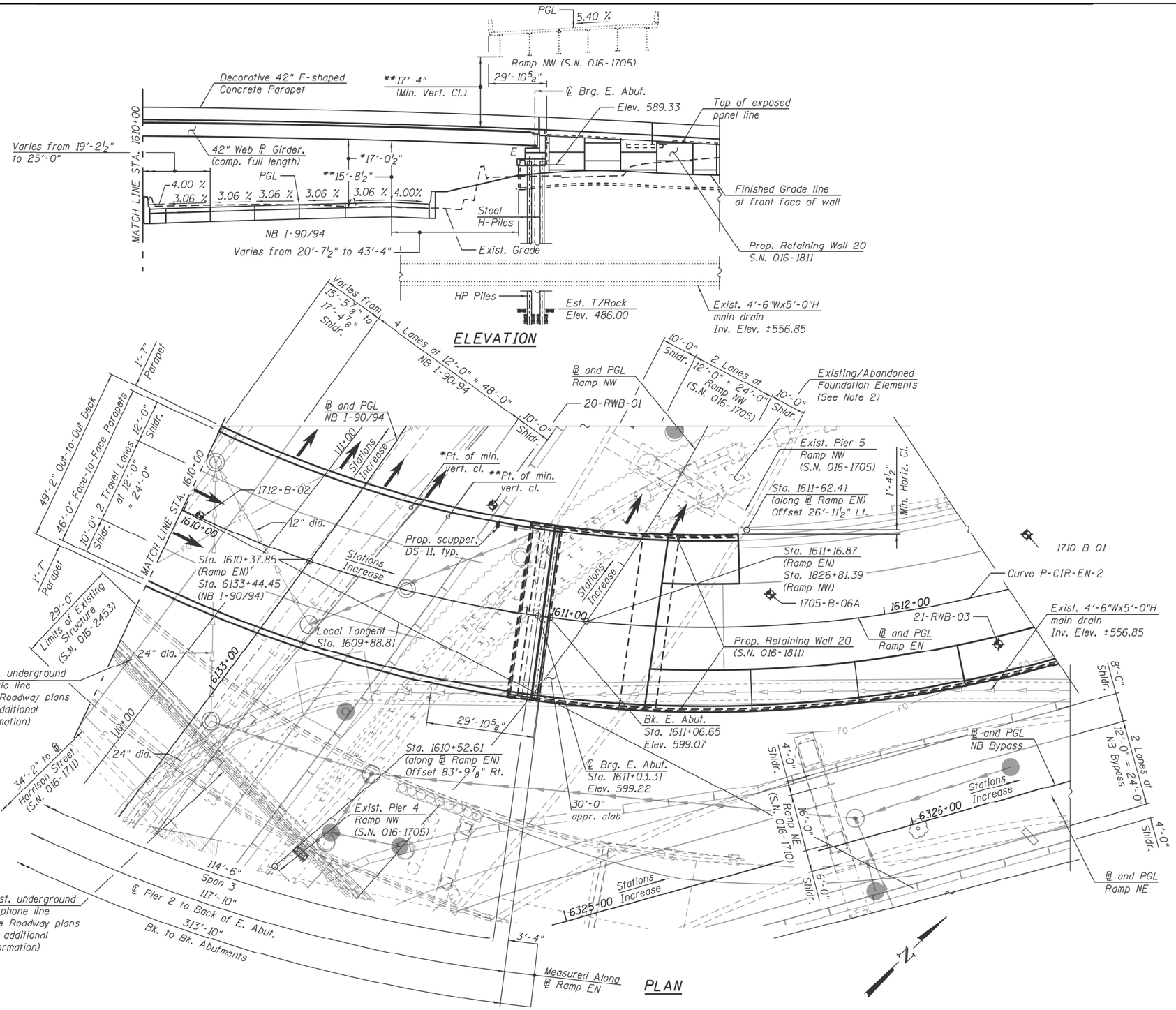

FOR INFORMATION ONLY

MODEL: Default
FILE NAME: pw:\\ildot-pw.bentley.com:PWIDOT\Documents\IDOT Offices\District 1\Projects\Cicle Int\CADData\Design-ohl-Ban2.dgn

USER NAME = naveed.hassan	DESIGNED -	REVISED -	
	DRAWN -	REVISED -	
PLOT SCALE = 100.0000 ' / in.	CHECKED -	REVISED -	
PLOT DATE = 12/19/2022	DATE -	REVISED -	

STATE OF ILLINOIS
DEPARTMENT OF TRANSPORTATION

LOCATION 13: RAMP FROM I-290 EB TO NB I-90/94 (SN: 016-1712)
EXISTING PLAN & ELEVATION (2 OF 2)

SCALE: | SHEET OF SHEETS | STA. TO STA.

VAR. RTE.	SECTION	COUNTY	TOTAL SHEETS	SHEET NO.
VAR.	FAI VARIOUS BRIDGE SEALING	COOK	75	51
		CONTRACT NO. 62U35		
	ILLINOIS	FED. AID PROJECT		

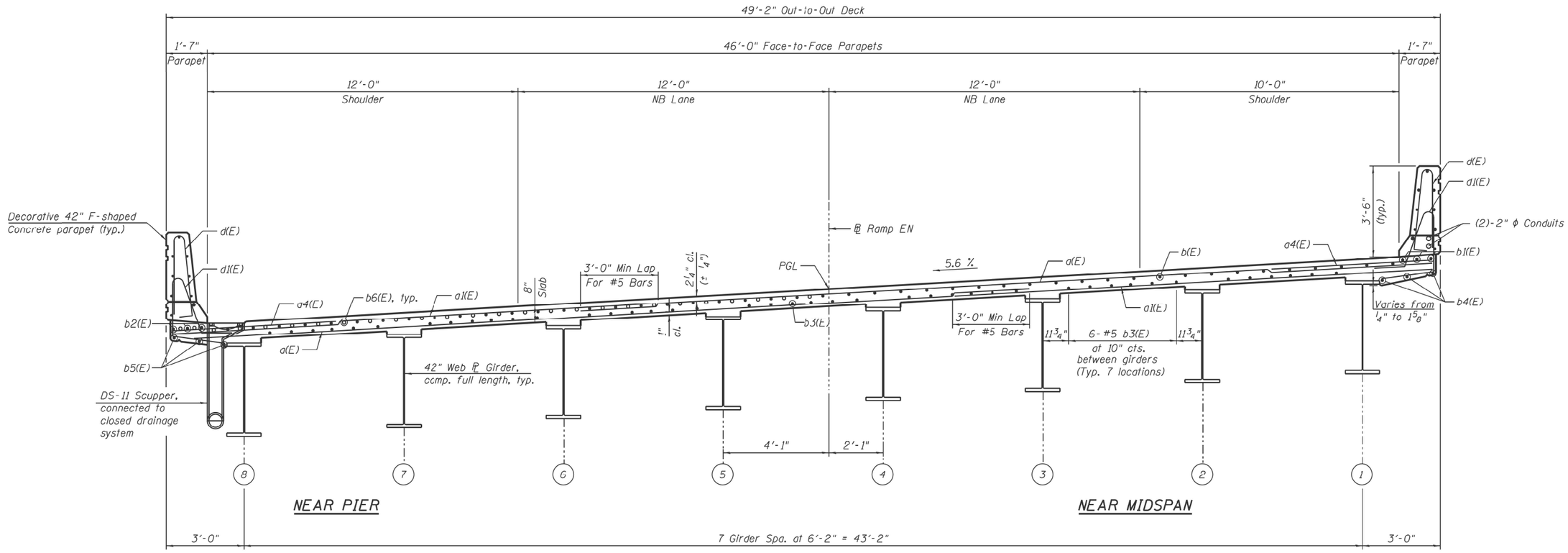

DECK CROSS SECTION

(Looking Upstation)
(Dimensions measured perpendicular to baseline)

FOR INFORMATION ONLY

MODEL: Default
FILE NAME: pw:\\ildot-pw.bentley.com:PWIDOT\Documents\IDOT Offices\District 1\Projects\Circle Int\CADData\Design-Sht-Man2.dgn

USER NAME = naveed.hassan	DESIGNED -	REVISED -	STATE OF ILLINOIS DEPARTMENT OF TRANSPORTATION
	DRAWN -	REVISED -	
PLOT SCALE = 100.0000 ' / in.	CHECKED -	REVISED -	
PLOT DATE = 12/19/2022	DATE -	REVISED -	

LOCATION 13: RAMP FROM I-290 EB TO NB I-90/94 (SN: 016-1712)
EXISTING CROSS SECTIONS

SCALE: | SHEET OF SHEETS | STA. TO STA.

VAR. RTE.	SECTION	COUNTY	TOTAL SHEETS	SHEET NO.
VAR.	FAI VARIOUS BRIDGE SEALING	COOK	75	52
		CONTRACT NO. 62U35		
		ILLINOIS	FED. AID PROJECT	

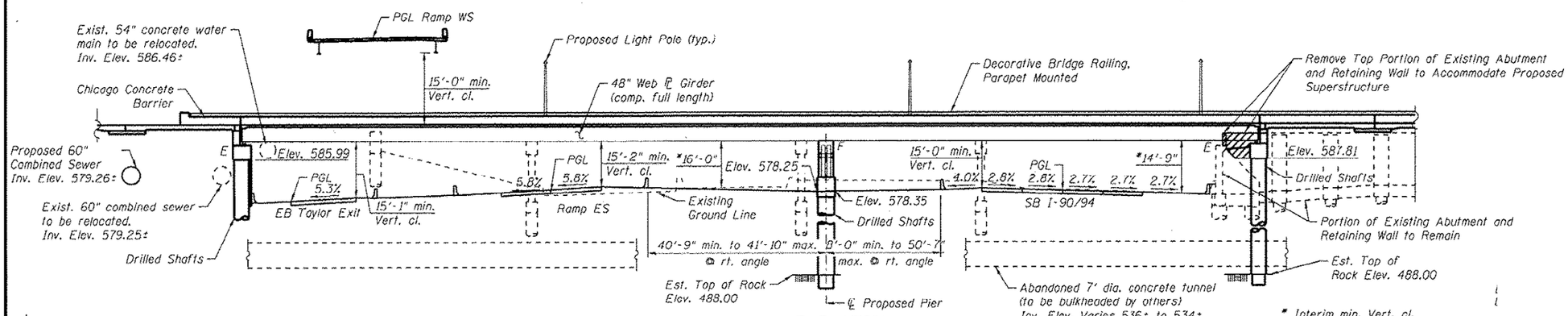

ELEVATION

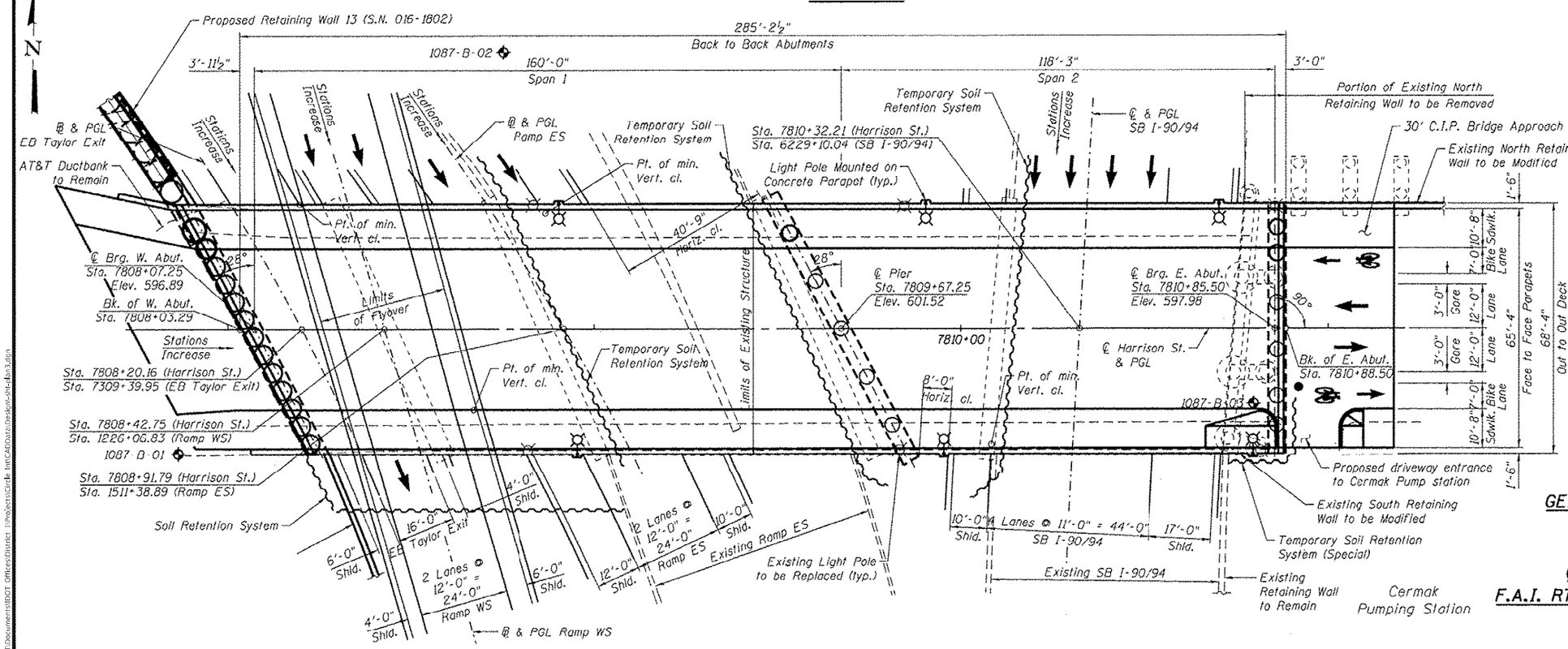

PLAN

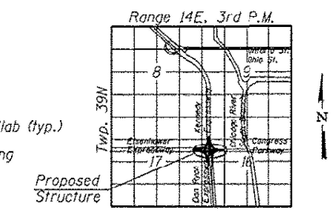

LOCATION SKETCH

GENERAL PLAN & ELEVATION
HARRISON ST. OVER
F.A.I. RTE. SB 90/94
(DAN RYAN EXPRESSWAY)
F.A.I. RTE. 90/94 - SECTION 2013-008R
COOK COUNTY
STATION 7810+32.21
STRUCTURE NO. 016-1713

FOR INFORMATION ONLY

MODEL: Default
FILE NAME: pw:\\ildot-pw.bentley.com:PWIDOT\Documents\IDOT Offices\District 1\Projects\Circle Int\CAD\Data\Design\Site 1\sn3.dgn

USER NAME = naveed.hassan	DESIGNED -	REVISED -	STATE OF ILLINOIS DEPARTMENT OF TRANSPORTATION	LOCATION 14: HARRISON ST. OVER SB I-90/94 (SN: 016-0173) EXISTING PLAN & ELEVATION
	DRAWN -	REVISED -		
PLOT SCALE = 100.0000 ' / in.	CHECKED -	REVISED -		
PLOT DATE = 12/19/2022	DATE -	REVISED -		SCALE: SHEET OF SHEETS STA. TO STA.

VAR. RTE.	SECTION	COUNTY	TOTAL SHEETS	SHEET NO.
VAR.	FAI VARIOUS BRIDGE SEALING	COOK	75	53
		CONTRACT NO. 62U35		
		ILLINOIS FED. AID PROJECT		

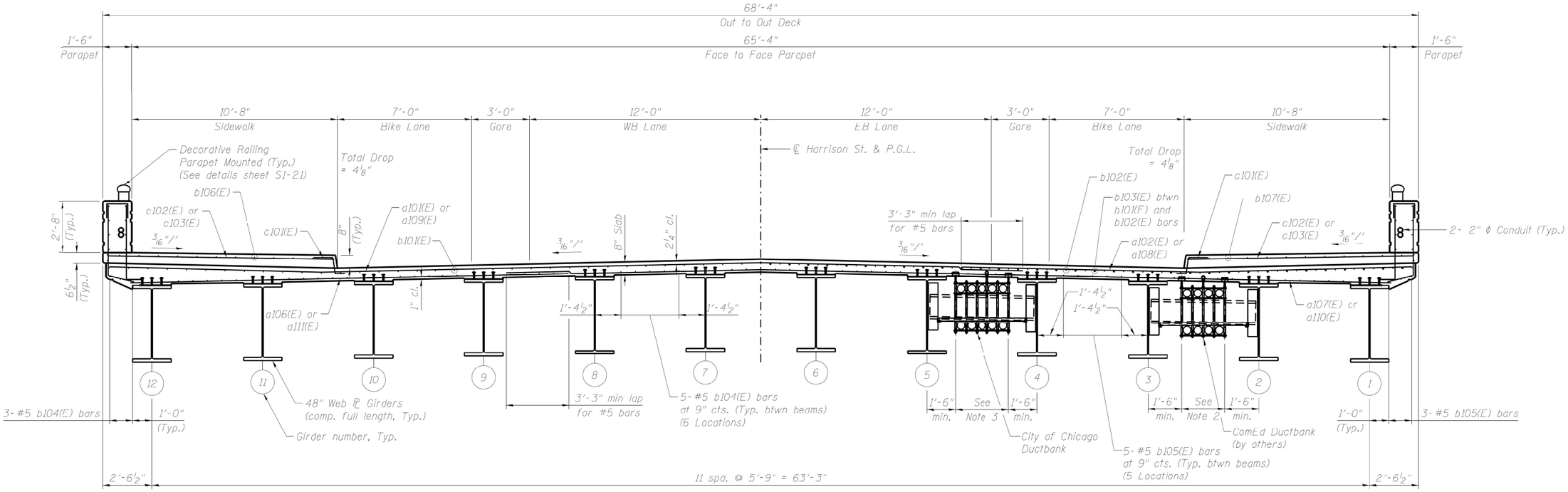

DECK CROSS SECTION

(Looking East)

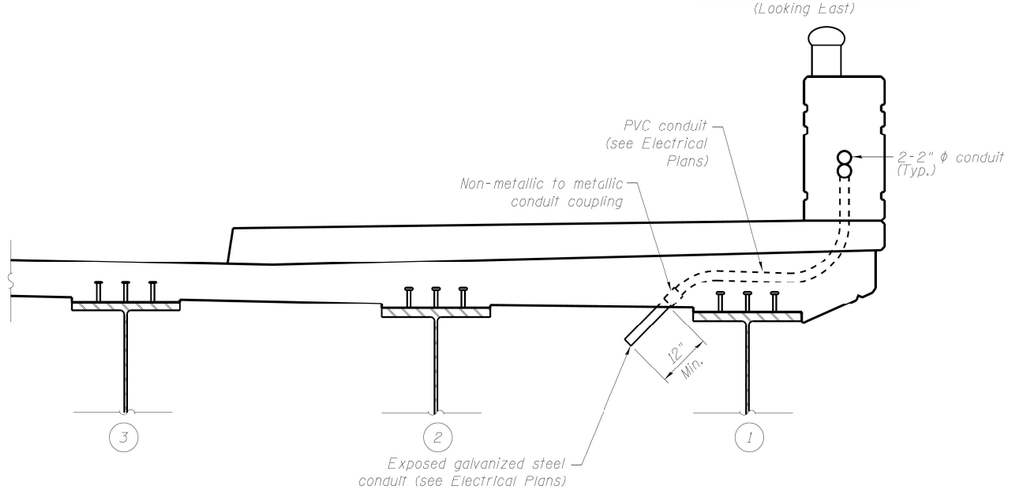

CONDUIT EMBEDDED IN DECK DETAIL

FOR INFORMATION ONLY

MODEL: Default
FILE NAME: pw:\\ildot-pw.bentley.com:PWIDOT\Documents\IDOT Offices\District 1\Projects\Circle Int\CADData\Design-Int-Ban3.dgn

USER NAME = naveed.hassan	DESIGNED -	REVISED -	STATE OF ILLINOIS DEPARTMENT OF TRANSPORTATION
	DRAWN -	REVISED -	
PLOT SCALE = 100.0000 ' / in.	CHECKED -	REVISED -	
PLOT DATE = 12/19/2022	DATE -	REVISED -	

LOCATION 14: HARRISON ST. OVER SB I-90/94 (SN: 016-0173)
EXISTING CROSS SECTIONS

SCALE: | SHEET OF SHEETS | STA. TO STA.

VAR. RTE.	SECTION	COUNTY	TOTAL SHEETS	SHEET NO.
VAR.	FAI VARIOUS BRIDGE SEALING	COOK	75	54
		CONTRACT NO. 62U35		
		ILLINOIS	FED. AID PROJECT	

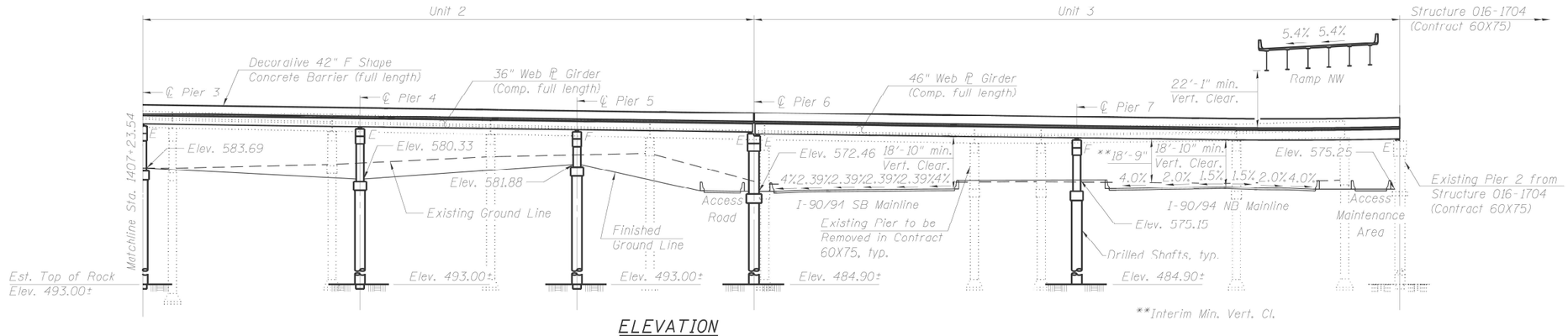

ELEVATION

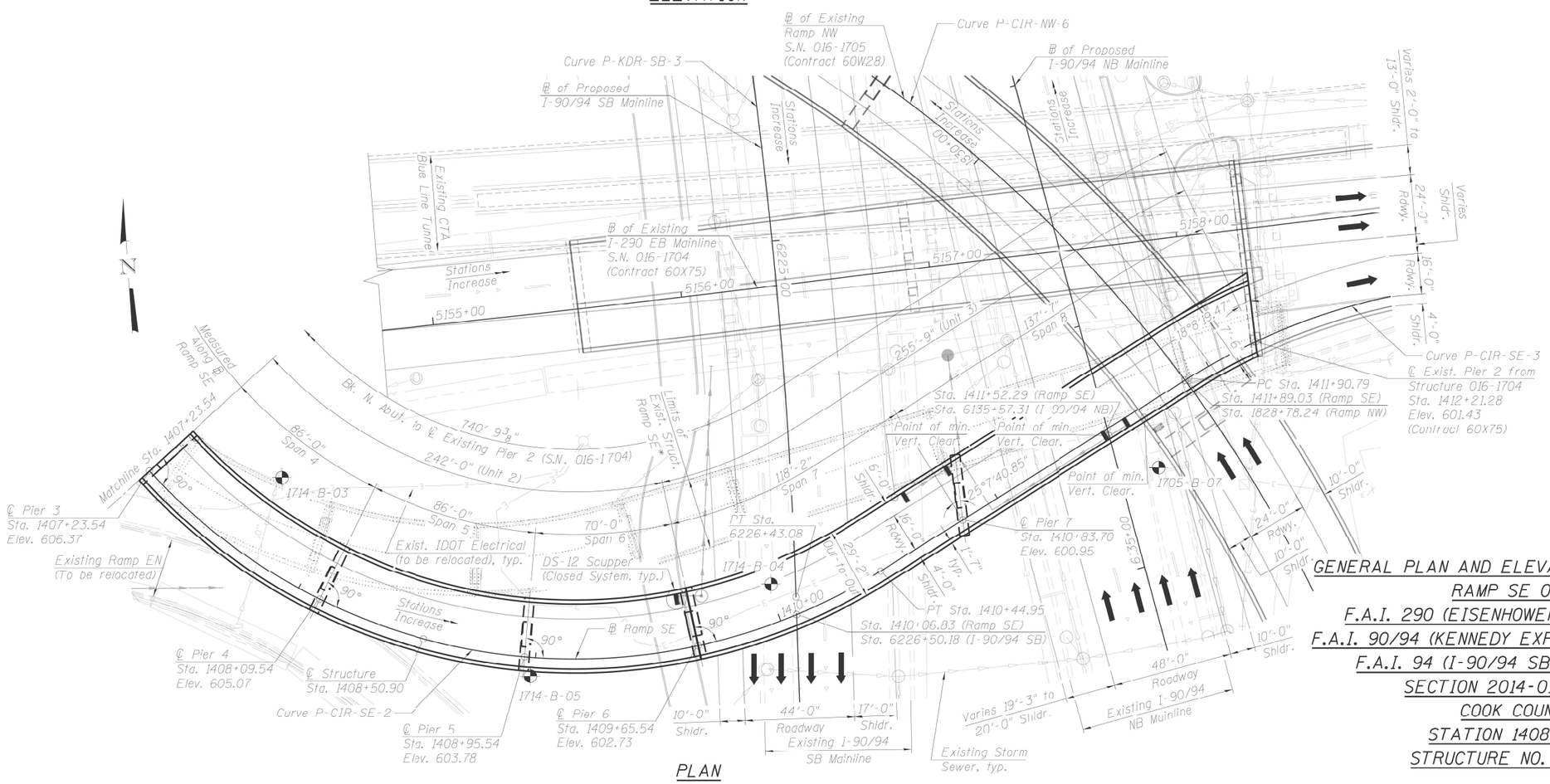

PLAN

GENERAL PLAN AND ELEVATION - UNITS 2&3
RAMP SE OVER
F.A.I. 290 (EISENHOWER EXPRESSWAY),
F.A.I. 90/94 (KENNEDY EXPRESSWAY) AND CTA
F.A.I. 94 (I-90/94 SB TO I-290 EB)
SECTION 2014-013 R&B-R
COOK COUNTY
STATION 1408+50.90
STRUCTURE NO. 016-1714

FOR INFORMATION ONLY

MODEL: Default
FILE NAME: pw:\\ildot-pw.bentley.com:PWIDOT\Documents\IDOT Offices\District 1\Projects\Grant & Int\CADData\Design-Int-Rev3.dgn

USER NAME = naveed.hassan	DESIGNED -	REVISED -	STATE OF ILLINOIS DEPARTMENT OF TRANSPORTATION
	DRAWN -	REVISED -	
PLOT SCALE = 100.0000 ' / in.	CHECKED -	REVISED -	
PLOT DATE = 12/19/2022	DATE -	REVISED -	

LOCATION 15: RAMP FROM SB I-90/94 TO I-290 EB (SN: 016-1714)
EXISTING PLAN & ELEVATION

SCALE: | SHEET OF SHEETS | STA. TO STA.

VAR. RTE.	SECTION	COUNTY	TOTAL SHEETS	SHEET NO.
VAR.	FAI VARIOUS BRIDGE SEALING	COOK	75	55
		CONTRACT NO. 62U35		
		ILLINOIS	FED. AID PROJECT	

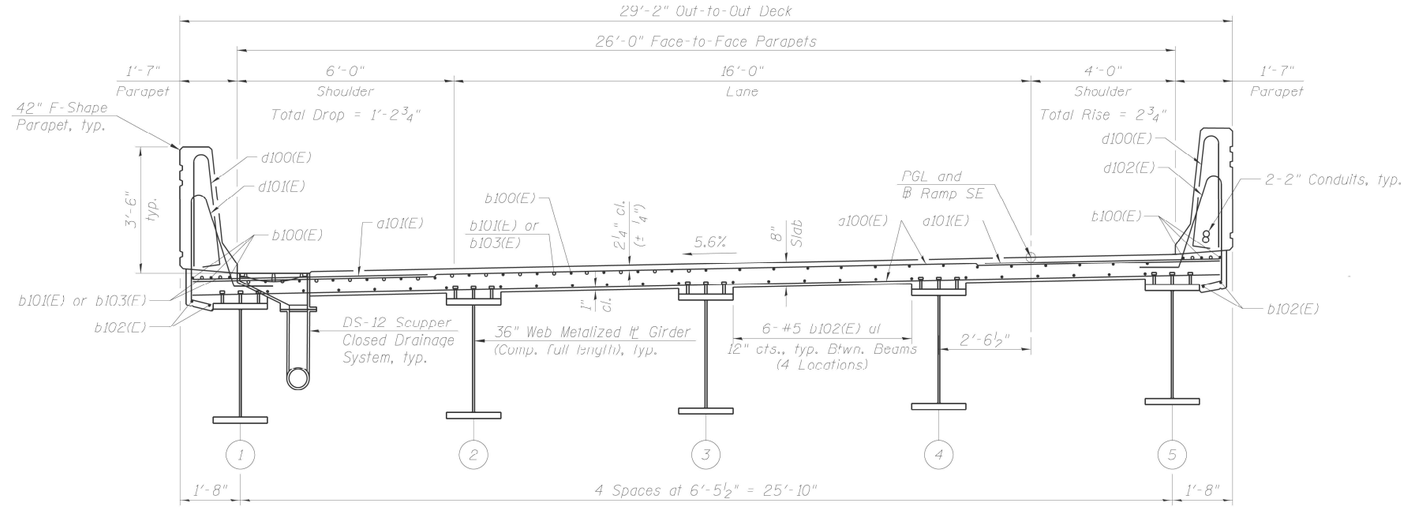

NEAR PIER

DECK CROSS SECTION - UNIT 1

(Looking Upstation)
(Dimensions measured perpendicular to baseline)

NEAR MIDSPAN

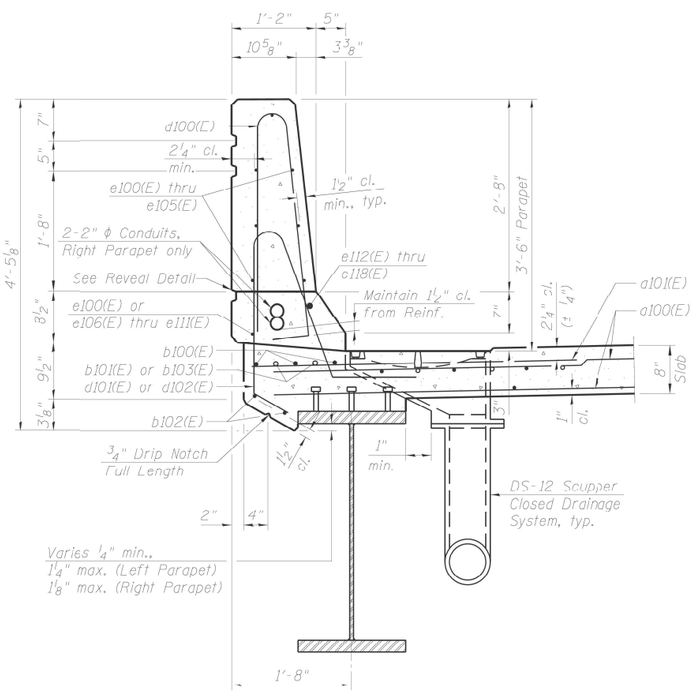

SECTION THRU PARAPET

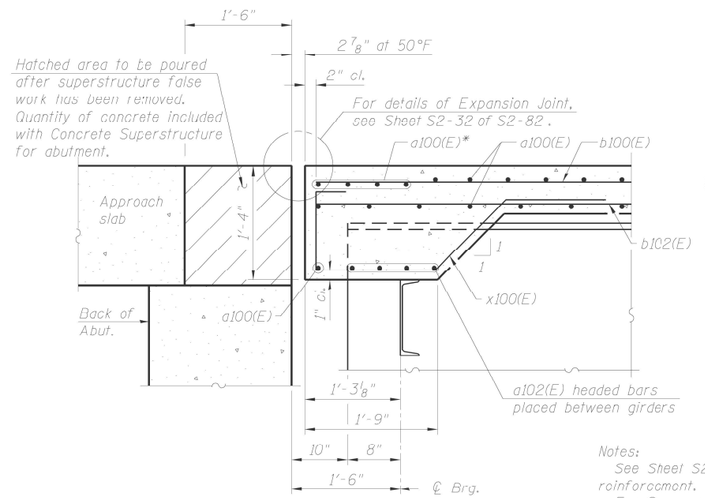

SECTION A-A

(Horiz. Dims. at RT L's to ℄ Brg.)

Notes:
See Sheet S2-23 of S2-82 for parapet reinforcement.
For Scupper locations, see Sheet S2-17 and S2-18 of S2-82.

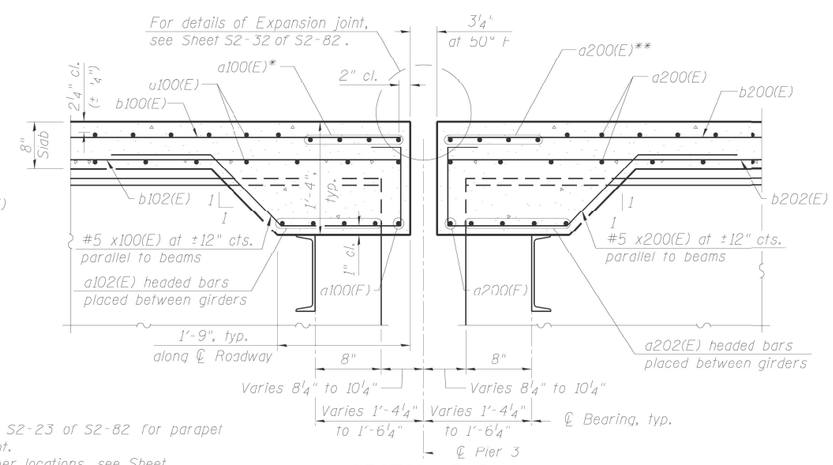

SECTION B-B

(Horiz. Dims. at RT L's to ℄ Brg.)

FOR INFORMATION ONLY

MODEL: Default
FILE NAME: pw:\\ildot-pw.bentley.com:PWIDOT\Documents\IDOT Offices\District 1\Projects\Circle Int\CADData\Design-Sht-Dgn3.dgn

USER NAME = naveed.hassan	DESIGNED -	REVISED -	
	DRAWN -	REVISED -	
PLOT SCALE = 100.0000 ' / in.	CHECKED -	REVISED -	
PLOT DATE = 12/19/2022	DATE -	REVISED -	

STATE OF ILLINOIS
DEPARTMENT OF TRANSPORTATION

LOCATION 15: RAMP FROM SB I-90/94 TO I-290 EB (SN: 016-1714)
EXISTING CROSS SECTIONS (1 OF 3)

SCALE: | SHEET OF SHEETS | STA. TO STA.

VAR. RTE.	SECTION	COUNTY	TOTAL SHEETS	SHEET NO.
VAR.	FAI VARIOUS BRIDGE SEALING	COOK	75	56
		CONTRACT NO. 62U35		
	ILLINOIS	FED. AID PROJECT		

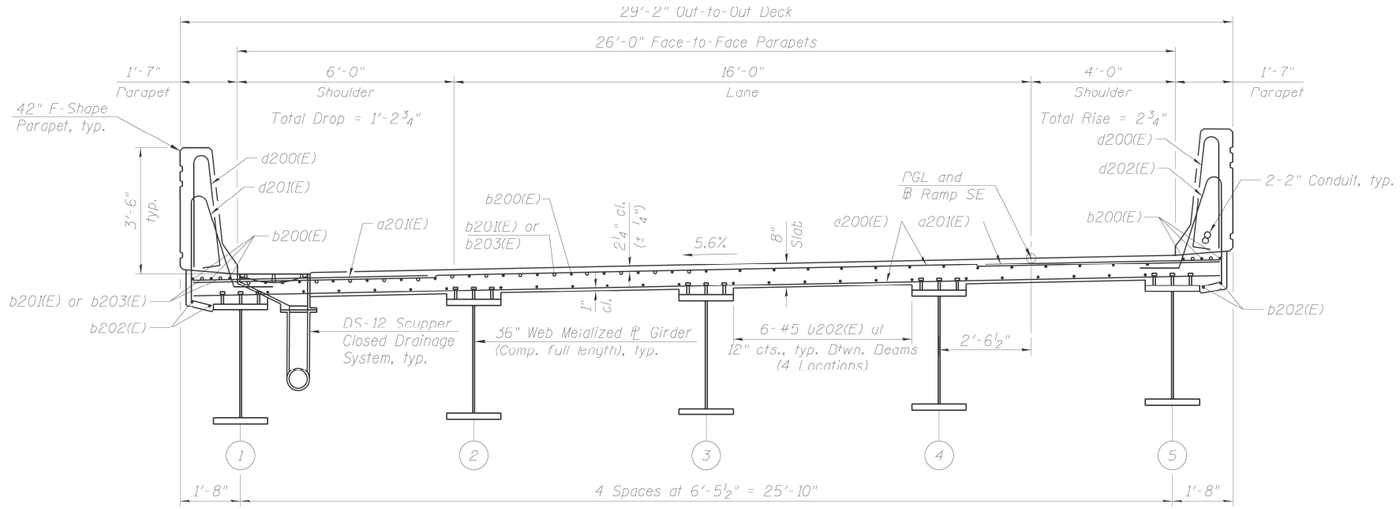

NEAR PIER

DECK CROSS SECTION - UNIT 2

(Looking Upstation)
(Dimensions measured perpendicular to baseline)

NEAR MIDSPAN

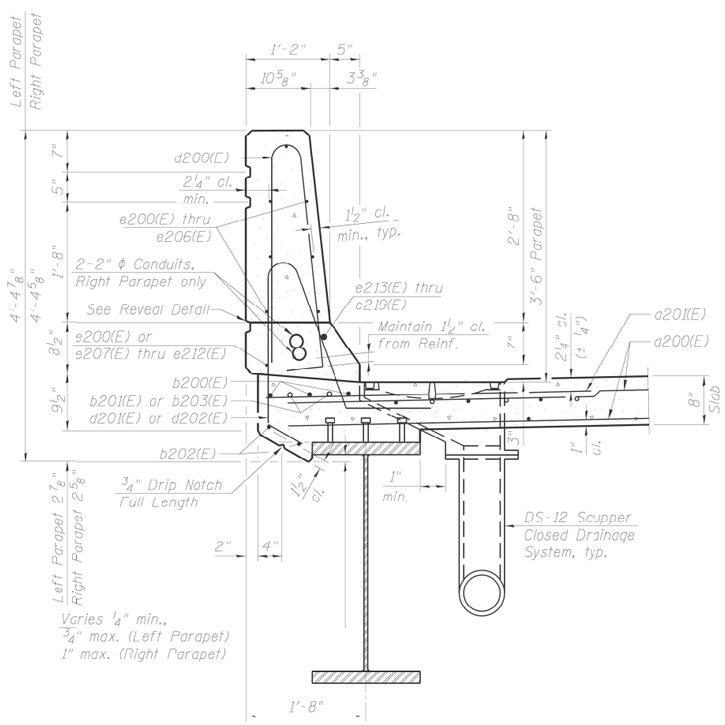

SECTION THRU PARAPET

FOR INFORMATION ONLY

MODEL: Default
FILE NAME: pw:\\ildot-pw.bentley.com:PWIDOT\Documents\IDOT Offices\District 1\Projects\Circle Int\CADData\Design-SN-Ann3.dgn

USER NAME = naveed.hassan	DESIGNED -	REVISED -	STATE OF ILLINOIS DEPARTMENT OF TRANSPORTATION
	DRAWN -	REVISED -	
PLOT SCALE = 100.0000 ' / in.	CHECKED -	REVISED -	
PLOT DATE = 12/19/2022	DATE -	REVISED -	

LOCATION 15: RAMP FROM SB I-90/94 TO I-290 EB (SN: 016-1714)
EXISTING CROSS SECTIONS (2 OF 3)

SCALE: | SHEET OF SHEETS | STA. TO STA.

VAR. RTE.	SECTION	COUNTY	TOTAL SHEETS	SHEET NO.
VAR.	FAI VARIOUS BRIDGE SEALING	COOK	75	57
		CONTRACT NO. 62U35		
	ILLINOIS	FED. AID PROJECT		

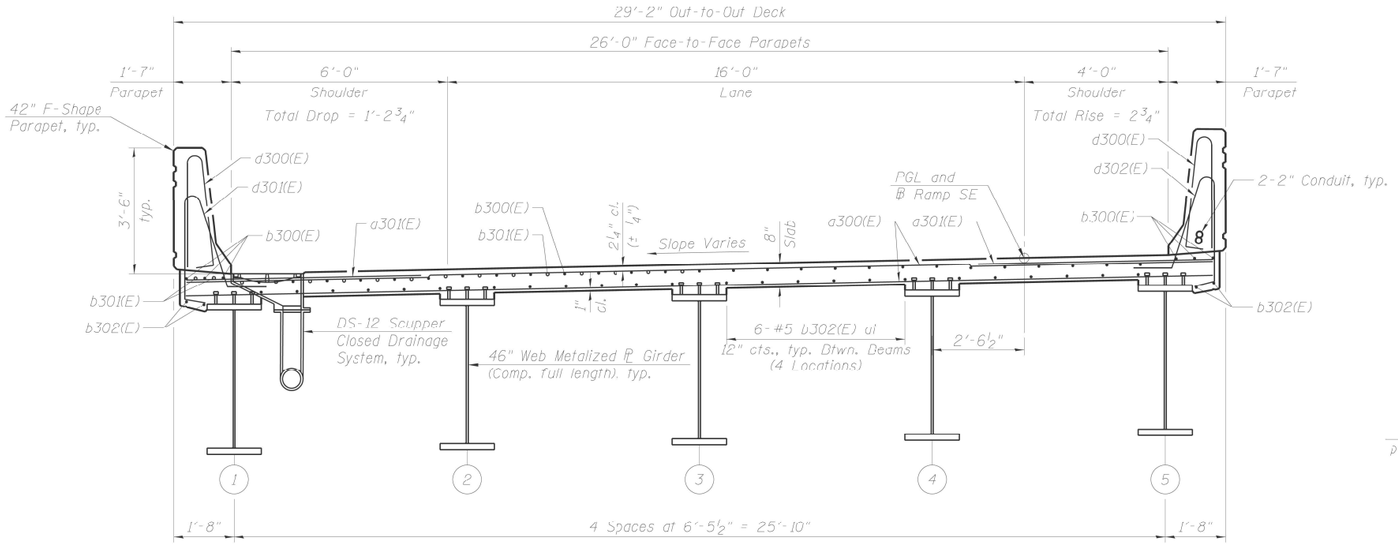

DECK CROSS SECTION - UNIT 3

(Looking Upstation)
(Dimensions measured perpendicular to baseline)
(Sta. 1409+65.54 to Sta. 1411+90.79)

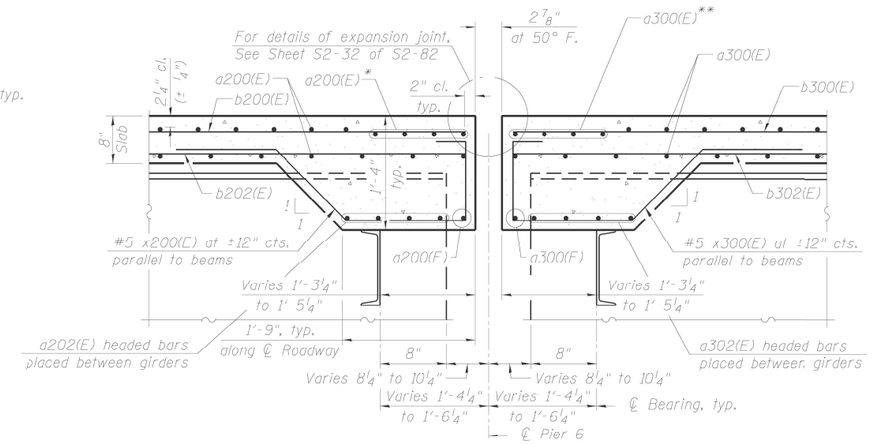

SECTION C-C

(Horiz. Dims. at RT L's to ℄ Brg.)

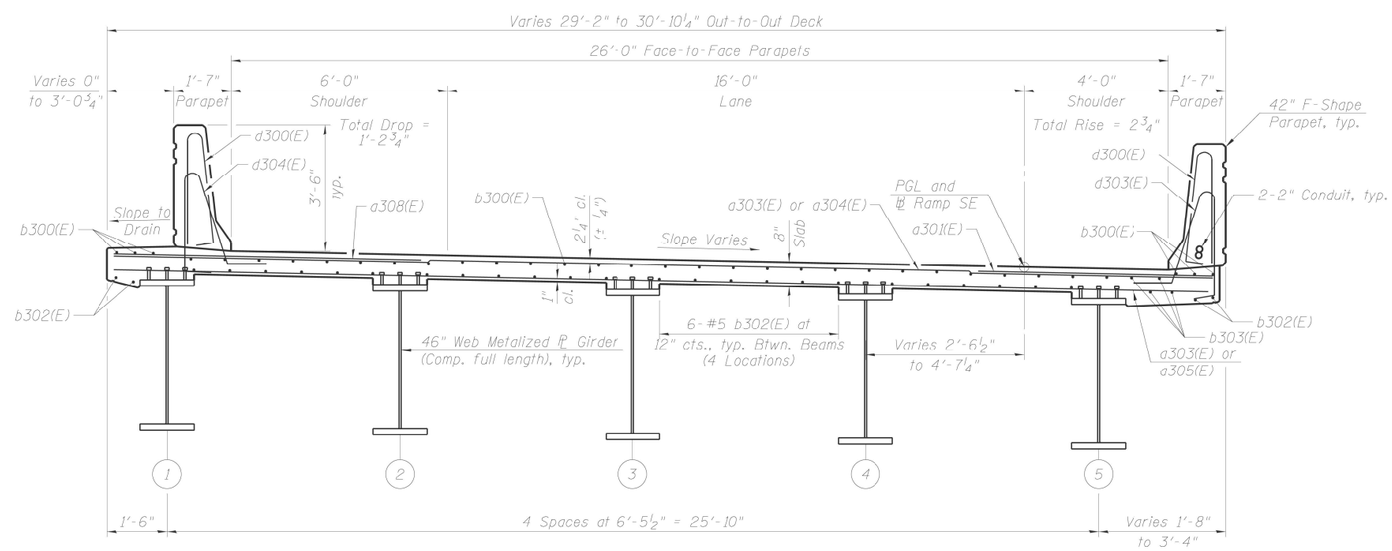

DECK CROSS SECTION - UNIT 3

(Looking Upstation)
(Dimensions measured perpendicular to baseline)
(Sta. 1411+90.79 to Sta. 1412+21.14)

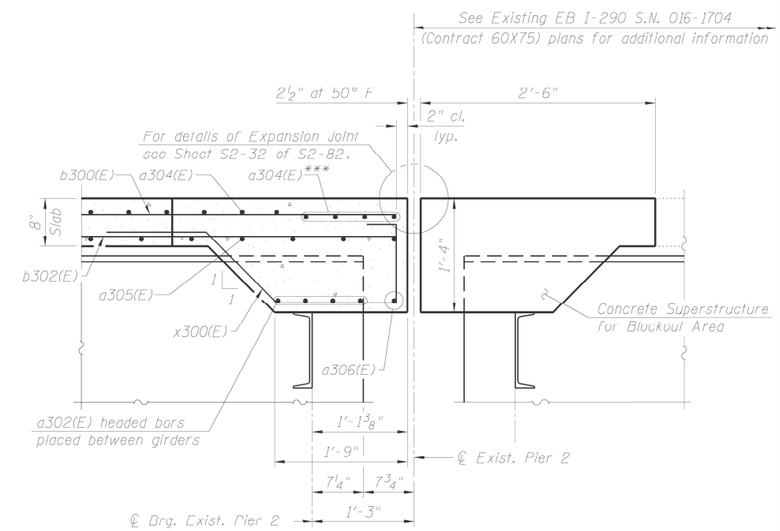

SECTION D-D

(Horiz. Dims. at RT L's to ℄ Brg.)

FOR INFORMATION ONLY

MODEL: Default
FILE NAME: pw:\\ildot-pw.bentley.com:PWIDOT\Documents\IDOT Offices\District 1\Projects\Circle Int\CADData\Design-SH-03.dgn

USER NAME = naveed.hassan	DESIGNED -	REVISED -	STATE OF ILLINOIS DEPARTMENT OF TRANSPORTATION
	DRAWN -	REVISED -	
PLOT SCALE = 100.0000 ' / in.	CHECKED -	REVISED -	
PLOT DATE = 12/19/2022	DATE -	REVISED -	

LOCATION 15: RAMP FROM SB I-90/94 TO I-290 EB (SN: 016-1714)
EXISTING CROSS SECTIONS (3 OF 3)

SCALE: | SHEET OF SHEETS | STA. TO STA.

VAR. RTE.	SECTION	COUNTY	TOTAL SHEETS	SHEET NO.
VAR.	FAI VARIOUS BRIDGE SEALING	COOK	75	58
		CONTRACT NO. 62U35		
	ILLINOIS	FED. AID PROJECT		

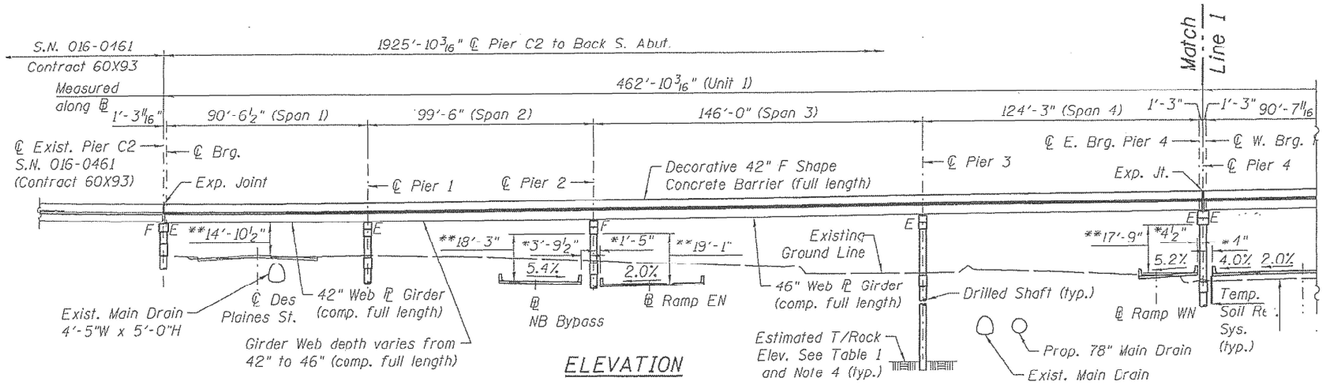

ELEVATION

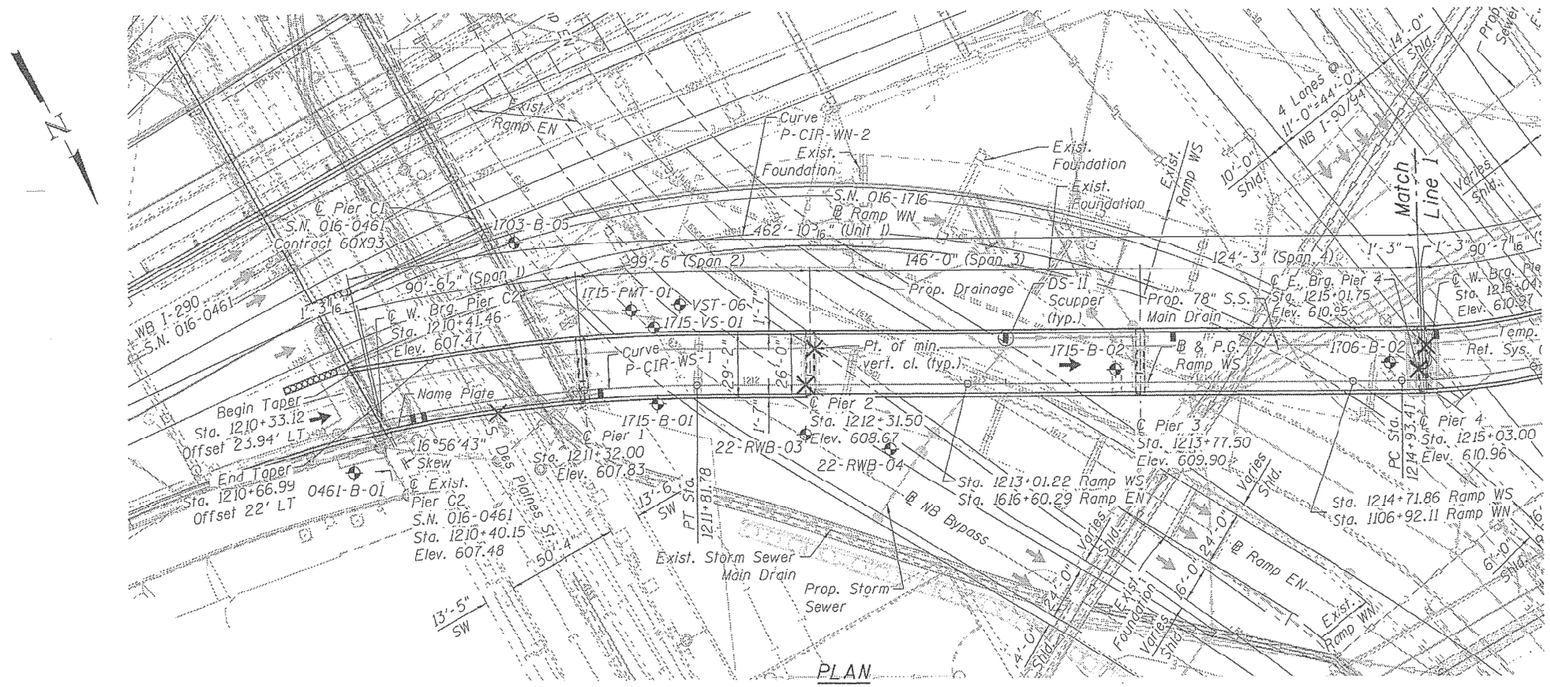

PLAN

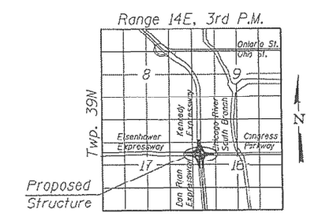

LOCATION SKETCH

GENERAL PLAN & ELEVATION - 1
RAMP WS OVER I-90/94/290
F.A.I. RTE. 90/94/290
SECTION 2014-013R&B-R
COOK COUNTY
STATION 1216+37.21
STRUCTURE NO. 016-1715

FOR INFORMATION ONLY

MODEL: Default
FILE NAME: pw:\\illinois-pw.bentley.com:PWIDOT\Documents\IDOT Offices\District 1\Projects\Circle Int\CAD\Data\Design-Int-Ran3.dgn

USER NAME = naveed.hassan	DESIGNED -	REVISED -	
	DRAWN -	REVISED -	
PLOT SCALE = 100.0000 ' / in.	CHECKED -	REVISED -	
PLOT DATE = 12/19/2022	DATE -	REVISED -	

STATE OF ILLINOIS
DEPARTMENT OF TRANSPORTATION

LOCATION 16: RAMP FROM WB I-290 TO SB I-90/94 (SN: 016-1715)
EXISTING PLAN & ELEVATION (1 OF 3)

SCALE: | SHEET OF SHEETS | STA. TO STA.

VAR. RTE.	SECTION	COUNTY	TOTAL SHEETS	SHEET NO.
VAR.	FAI VARIOUS BRIDGE SEALING	COOK	75	59
		CONTRACT NO. 62U35		
	ILLINOIS	FED. AID PROJECT		

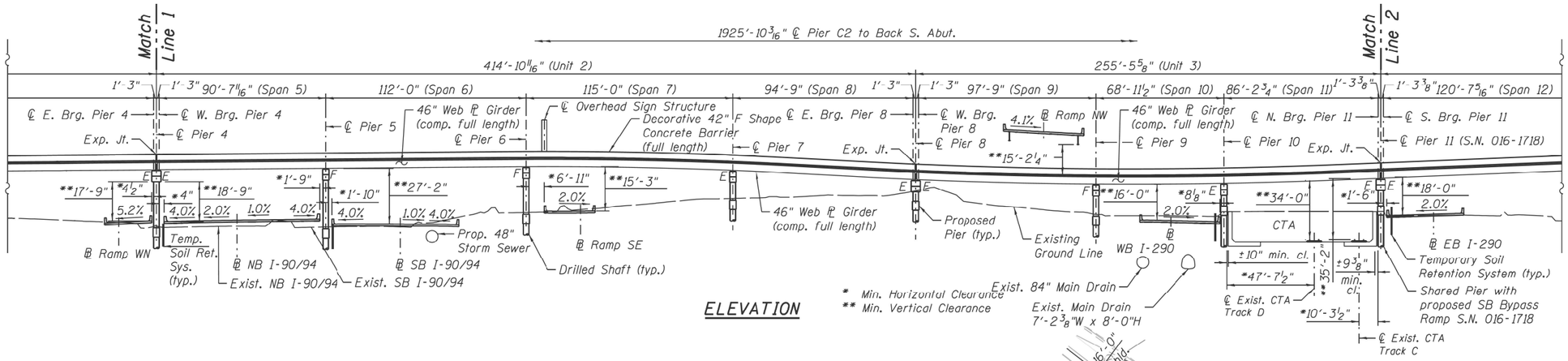

* Min. Horizontal Clearance
** Min. Vertical Clearance

ELEVATION

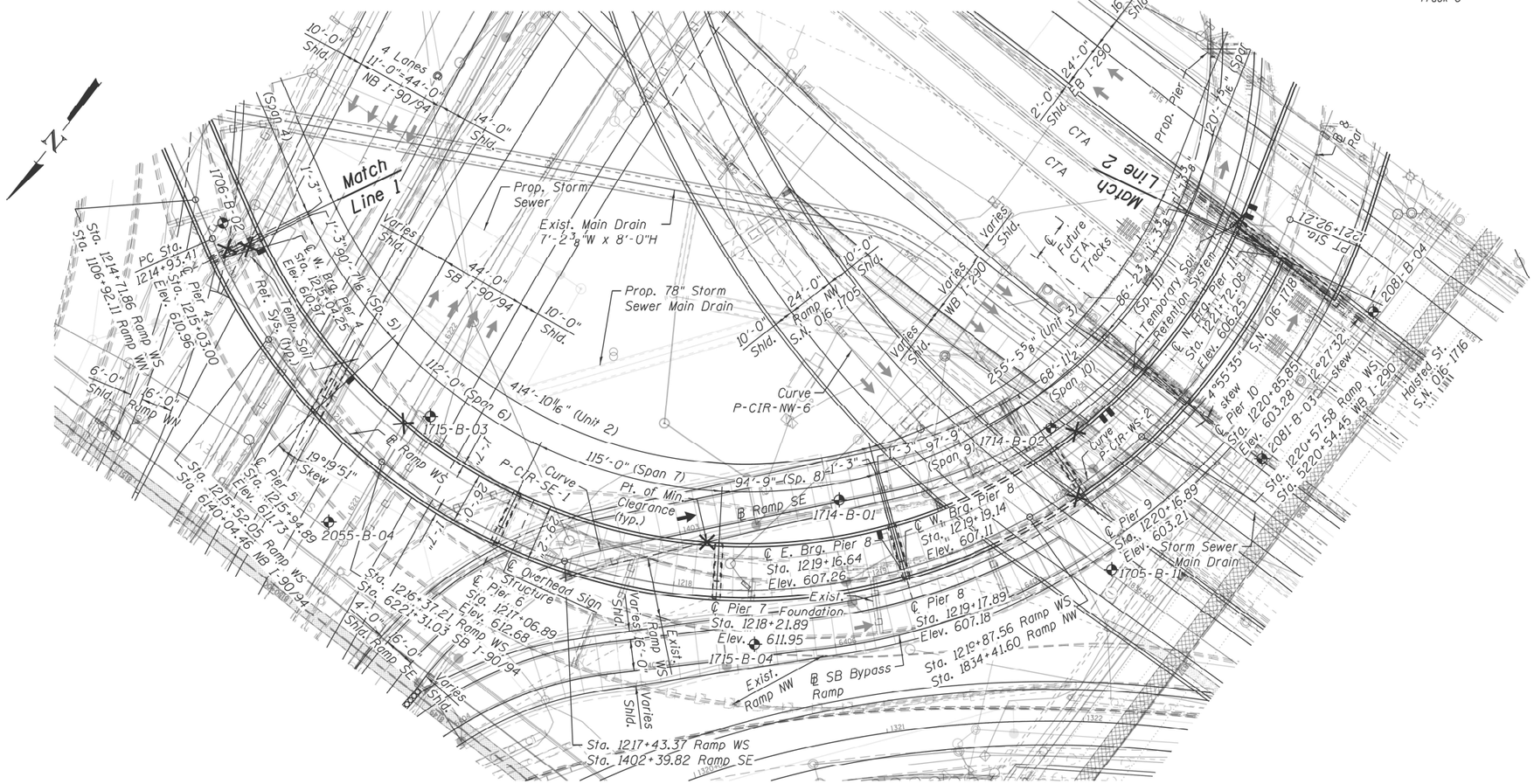

PLAN

FOR INFORMATION ONLY

MODEL: Default
FILE NAME: pw:\\ildot-pw.bentley.com:PWIDOT\Documents\IDOT Offices\District 1\Projects\Circle Int\CADData\Design-Ohl-Ram3.dgn

USER NAME = naveed.hassan	DESIGNED -	REVISED -	
	DRAWN -	REVISED -	
PLOT SCALE = 100.0000 ' / in.	CHECKED -	REVISED -	
PLOT DATE = 12/19/2022	DATE -	REVISED -	

STATE OF ILLINOIS
DEPARTMENT OF TRANSPORTATION

LOCATION 16: RAMP FROM WB I-290 TO SB I-90/94 (SN: 016-1715)
EXISTING PLAN & ELEVATION (2 OF 3)

SCALE: | SHEET OF SHEETS | STA. TO STA.

VAR. RTE.	SECTION	COUNTY	TOTAL SHEETS	SHEET NO.
VAR.	FAI VARIOUS BRIDGE SEALING	COOK	75	60
		CONTRACT NO. 62U35		
		ILLINOIS FED. AID PROJECT		

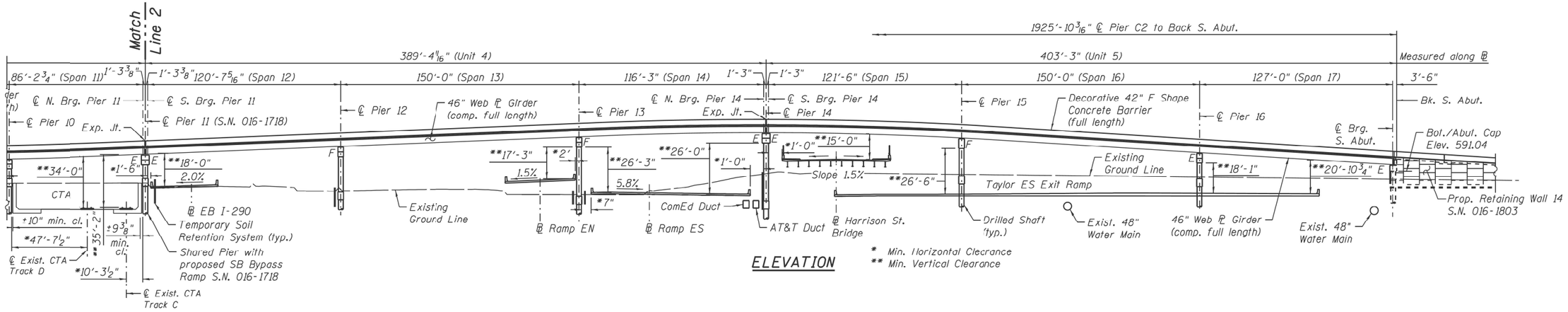

ELEVATION

* Min. Horizontal Clearance
** Min. Vertical Clearance

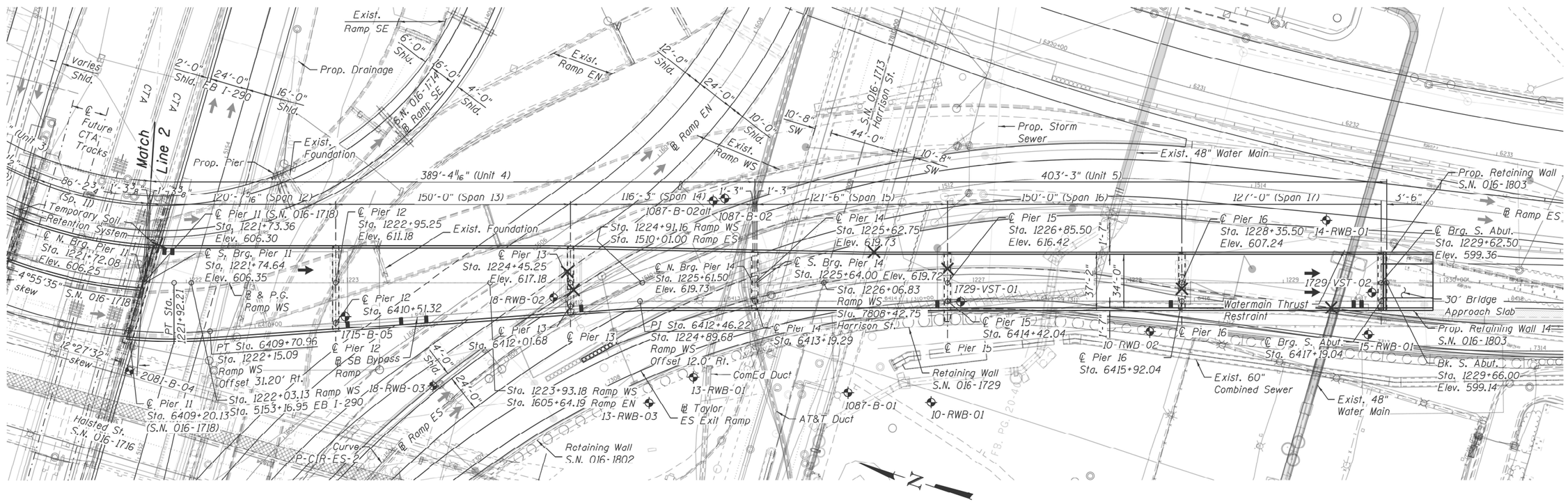

PLAN

FOR INFORMATION ONLY

MODEL: Default
FILE NAME: pw:\\ildot-pw.bentley.com:PWIDOT\Documents\IDOT Offices\District 1\Projects\Circle Int\CADData\Design-Site-Plan3.dgn

USER NAME = naveed.hassan	DESIGNED -	REVISED -	
	DRAWN -	REVISED -	
PLOT SCALE = 100.0000 ' / in.	CHECKED -	REVISED -	
PLOT DATE = 12/19/2022	DATE -	REVISED -	

STATE OF ILLINOIS
DEPARTMENT OF TRANSPORTATION

LOCATION 16: RAMP FROM WB I-290 TO SB I-90/94 (SN: 016-1715)
EXISTING PLAN & ELEVATION (3 OF 3)

SCALE: | SHEET OF SHEETS | STA. TO STA.

VAR. RTE.	SECTION	COUNTY	TOTAL SHEETS	SHEET NO.
VAR.	FAI VARIOUS BRIDGE SEALING	COOK	75	61
		CONTRACT NO. 62U35		
		ILLINOIS	FED. AID PROJECT	

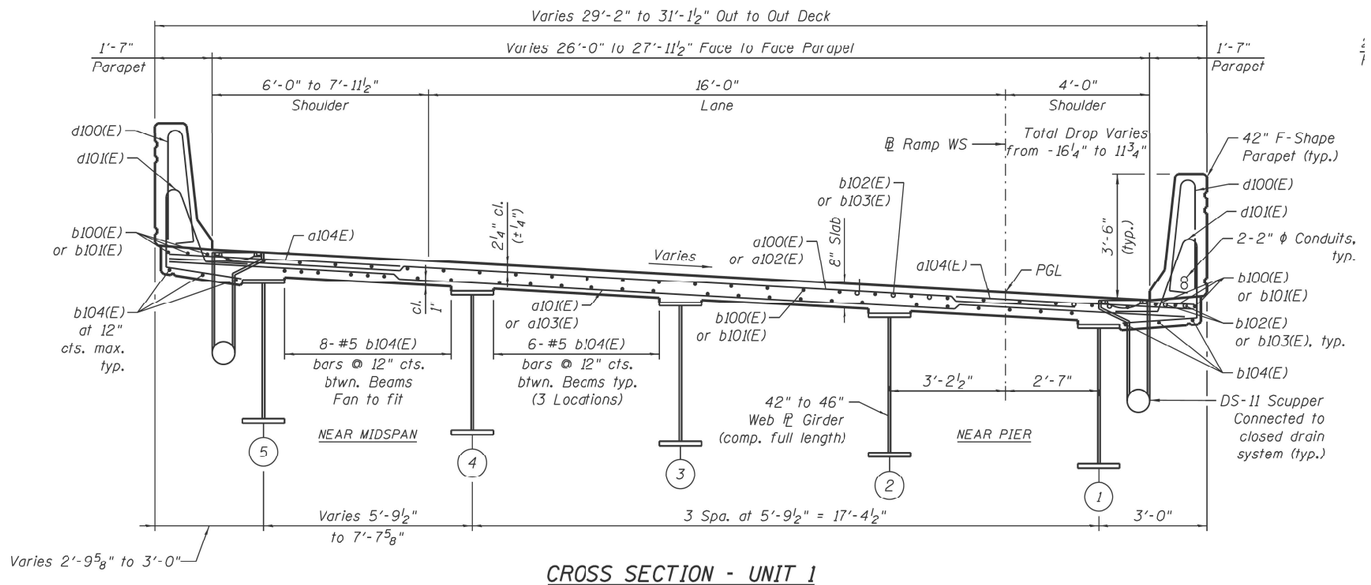

CROSS SECTION - UNIT 1

(Looking Upstation)

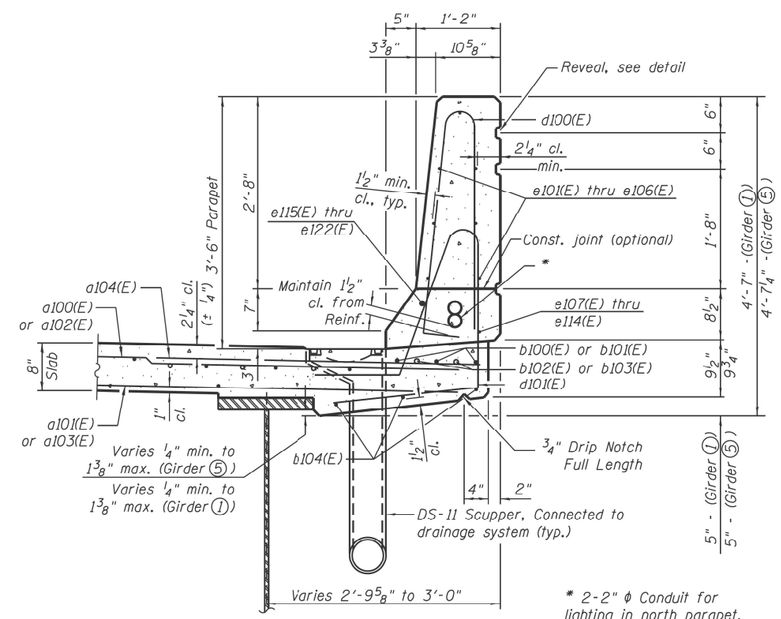

SECTION THRU PARAPET

FOR INFORMATION ONLY

MODEL: Default
FILE NAME: pw:\\ildot-pw.bentley.com:PWIDOT\Documents\IDOT Offices\District 1\Projects\Circle Int\CADData\Design-Sht-Plan3.dgn

USER NAME = naveed.hassan	DESIGNED -	REVISED -	STATE OF ILLINOIS DEPARTMENT OF TRANSPORTATION
	DRAWN -	REVISED -	
PLOT SCALE = 100.0000 ' / in.	CHECKED -	REVISED -	
PLOT DATE = 12/19/2022	DATE -	REVISED -	

LOCATION 16: RAMP FROM WB I-290 TO SB I-90/94 (SN: 016-1715)
EXISTING CROSS SECTIONS (1 OF 3)

SCALE: | SHEET OF SHEETS | STA. TO STA.

VAR. RTE.	SECTION	COUNTY	TOTAL SHEETS	SHEET NO.
VAR.	FAI VARIOUS BRIDGE SEALING	COOK	75	62
		CONTRACT NO. 62U35		
	ILLINOIS	FED. AID PROJECT		

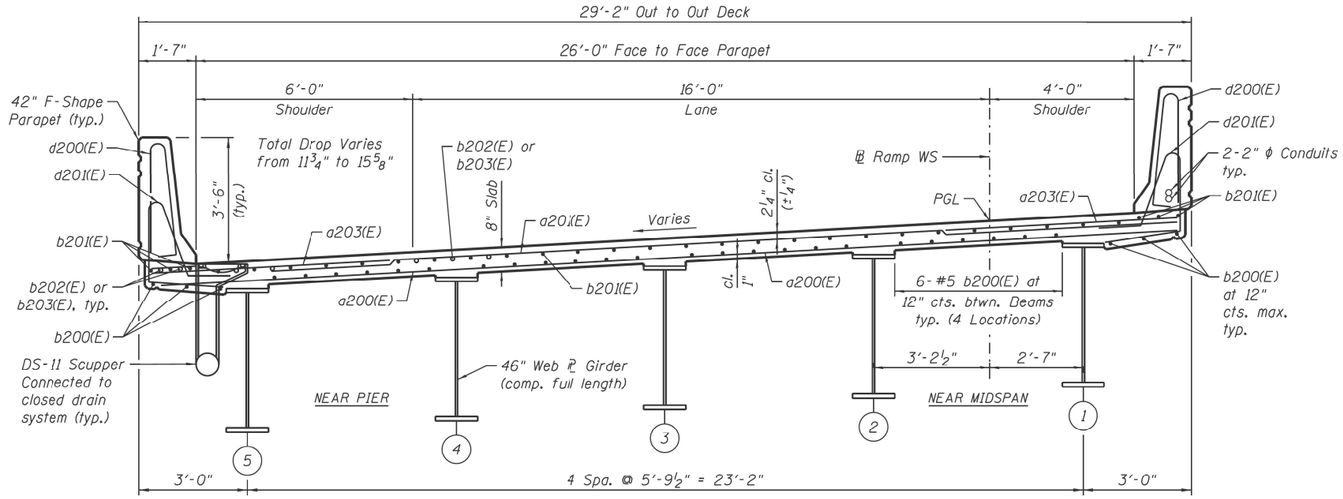

CROSS SECTION - UNIT 2

(Looking Upstation)

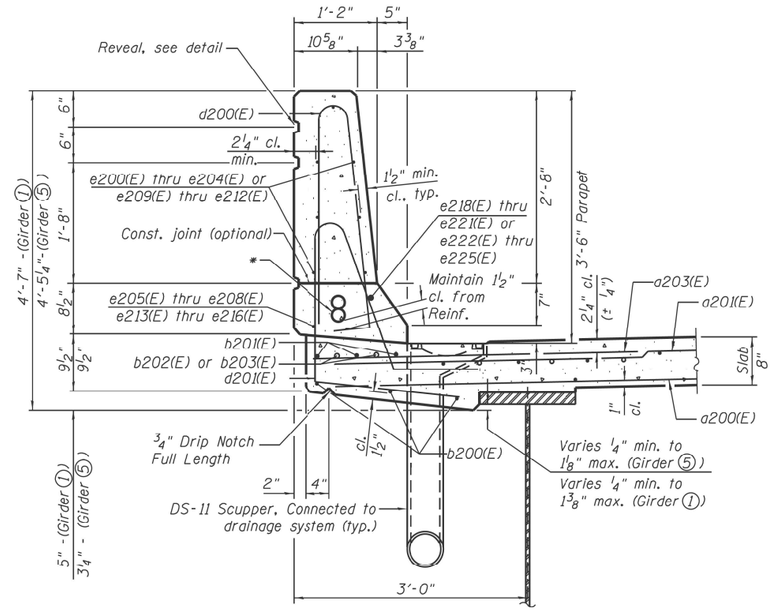

SECTION THRU PARAPET

FOR INFORMATION ONLY

MODEL: Default
FILE NAME: pw:\\ildot-pw.bentley.com:PWIDOT\Documents\IDOT Offices\District 1\Projects\Circle Int\CAD Data\Design-Site-Man\

USER NAME = naveed.hassan	DESIGNED -	REVISED -	STATE OF ILLINOIS DEPARTMENT OF TRANSPORTATION
	DRAWN -	REVISED -	
PLOT SCALE = 100.0000 ' / in.	CHECKED -	REVISED -	
PLOT DATE = 12/19/2022	DATE -	REVISED -	

LOCATION 16: RAMP FROM WB I-290 TO SB I-90/94 (SN: 016-1715)
EXISTING CROSS SECTIONS (2 OF 3)

SCALE: | SHEET OF SHEETS | STA. TO STA.

VAR. RTE.	SECTION	COUNTY	TOTAL SHEETS	SHEET NO.
VAR.	FAI VARIOUS BRIDGE SEALING	COOK	75	63
		CONTRACT NO. 62U35		
		ILLINOIS	FED. AID PROJECT	

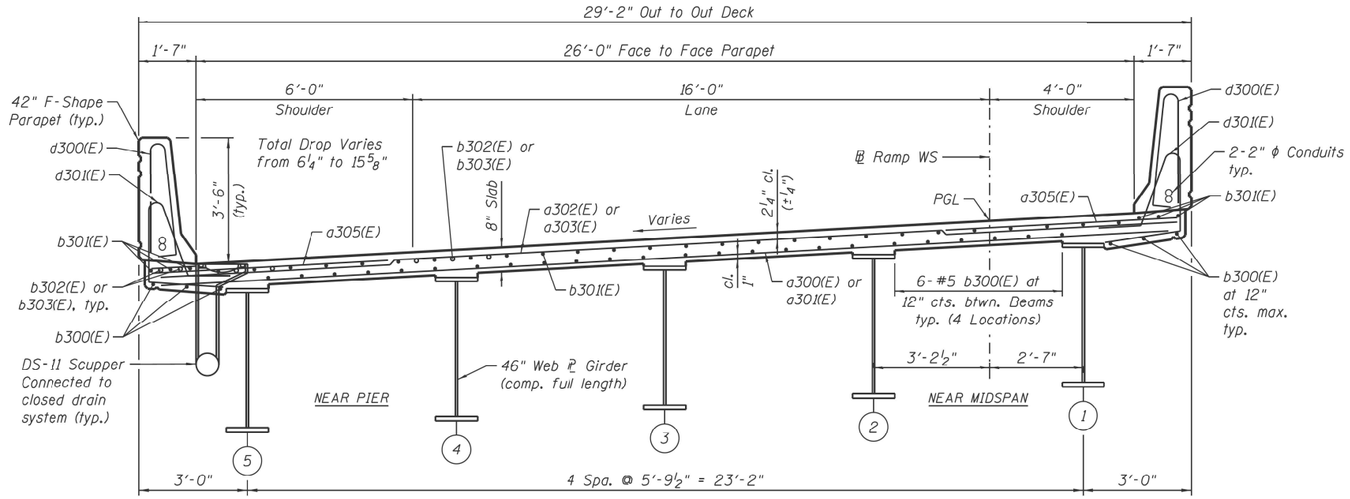

CROSS SECTION - UNIT 3

(Looking Upstation)

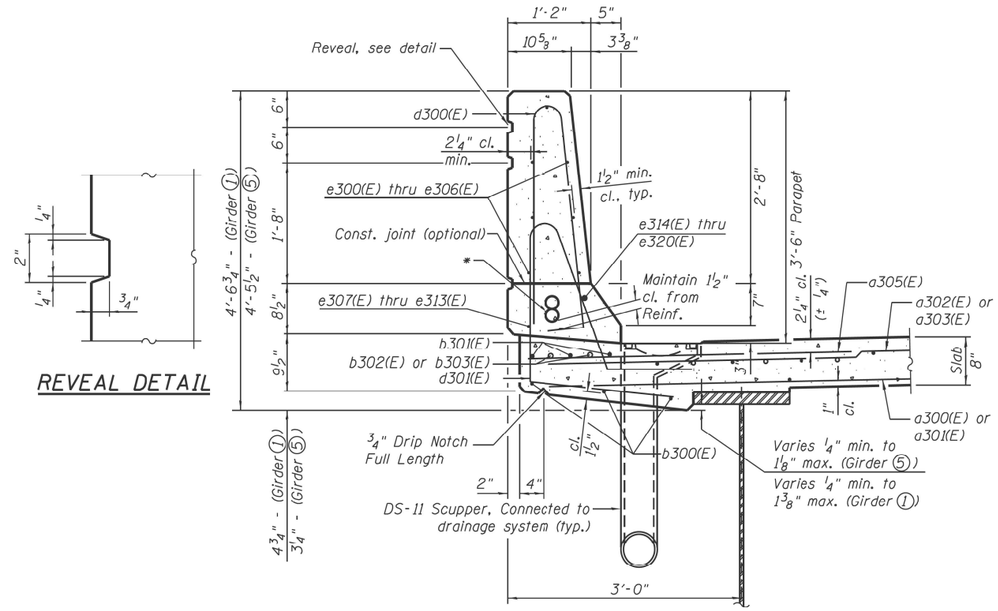

REVEAL DETAIL

SECTION THRU PARAPET

FOR INFORMATION ONLY

MODEL: Default
FILE NAME: pw:\\illiot-pw.bentley.com:PWIDOT\Documents\IDOT Offices\District 1\Projects\Circle Int\CADData\Design-Site-4\sn3.dgn

USER NAME = naveed.hassan	DESIGNED -	REVISED -	
	DRAWN -	REVISED -	
PLOT SCALE = 100.0000 ' / in.	CHECKED -	REVISED -	
PLOT DATE = 12/19/2022	DATE -	REVISED -	

STATE OF ILLINOIS
DEPARTMENT OF TRANSPORTATION

LOCATION 16: RAMP FROM WB I-290 TO SB I-90/94 (SN: 016-1715)
EXISTING CROSS SECTIONS (3 OF 3)

SCALE: | SHEET OF SHEETS | STA. TO STA.

VAR. RTE.	SECTION	COUNTY	TOTAL SHEETS	SHEET NO.
VAR.	FAI VARIOUS BRIDGE SEALING	COOK	75	64
		CONTRACT NO. 62U35		
	ILLINOIS	FED. AID PROJECT		

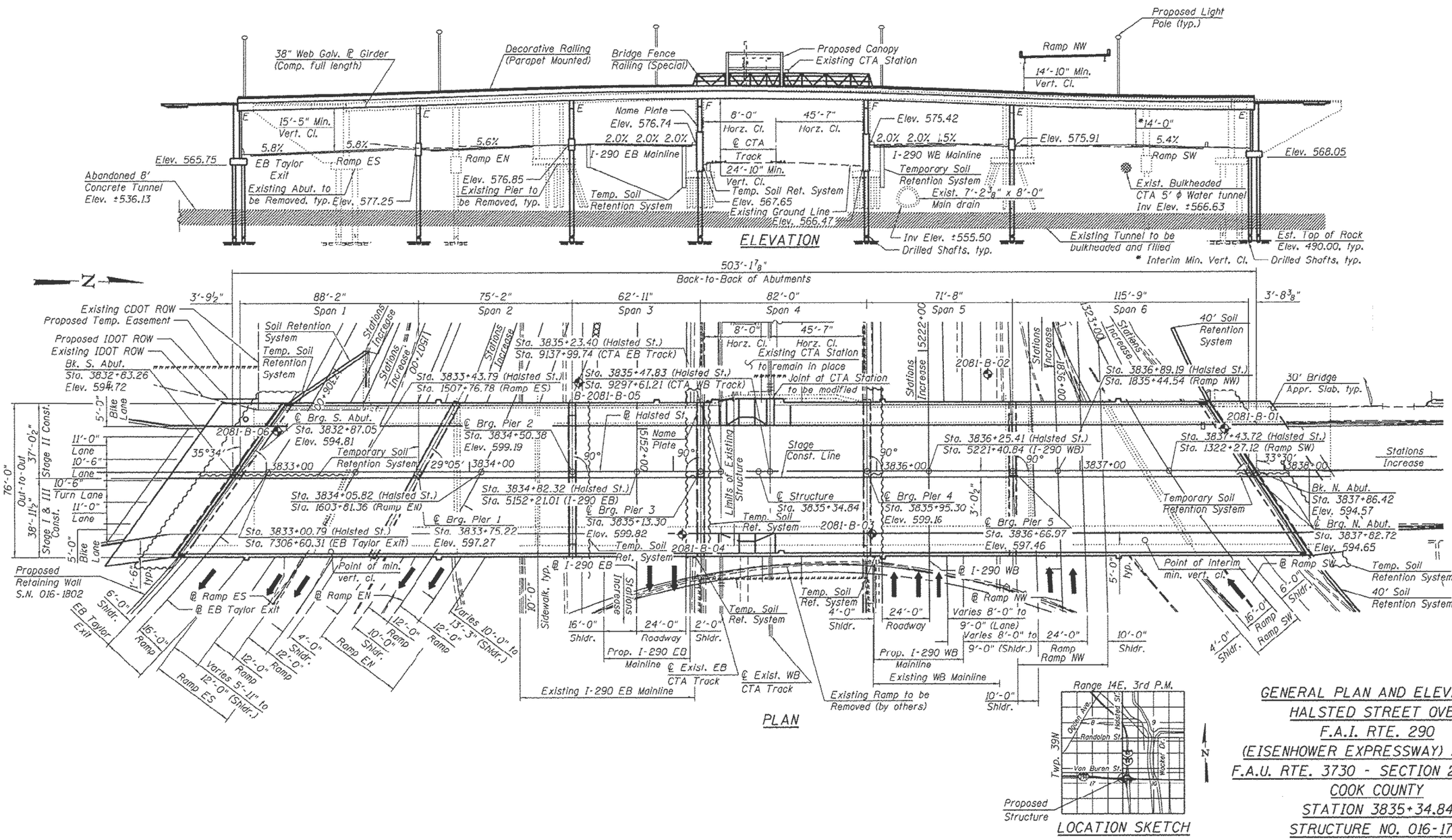

GENERAL PLAN AND ELEVATION
HALSTED STREET OVER
F.A.I. RTE. 290
(EISENHOWER EXPRESSWAY) AND CTA
F.A.U. RTE. 3730 - SECTION 2013-008R
COOK COUNTY
STATION 3835+34.84
STRUCTURE NO. 016-1716

FOR INFORMATION ONLY

MODEL: Default
FILE NAME: pw:\\illinois-pw.bentley.com:PWIDOT\Documents\IDOT Offices\District 1\Projects\Circle Int\CAD\Sts\Design-Sht-Ren3.dgn

USER NAME = naveed.hassan	DESIGNED -	REVISED -	
	DRAWN -	REVISED -	
PLOT SCALE = 100.0000 ' / in.	CHECKED -	REVISED -	
PLOT DATE = 12/19/2022	DATE -	REVISED -	

STATE OF ILLINOIS
DEPARTMENT OF TRANSPORTATION

LOCATION 17: S. HALSTED ST. OVER I-290 (SN: 016-1716)
EXISTING PLAN & ELEVATION

SCALE: | SHEET OF SHEETS | STA. TO STA.

VAR. RTE.	SECTION	COUNTY	TOTAL SHEETS	SHEET NO.
VAR.	FAI VARIOUS BRIDGE SEALING	COOK	75	65
		CONTRACT NO. 62U35		
		ILLINOIS FED. AID PROJECT		

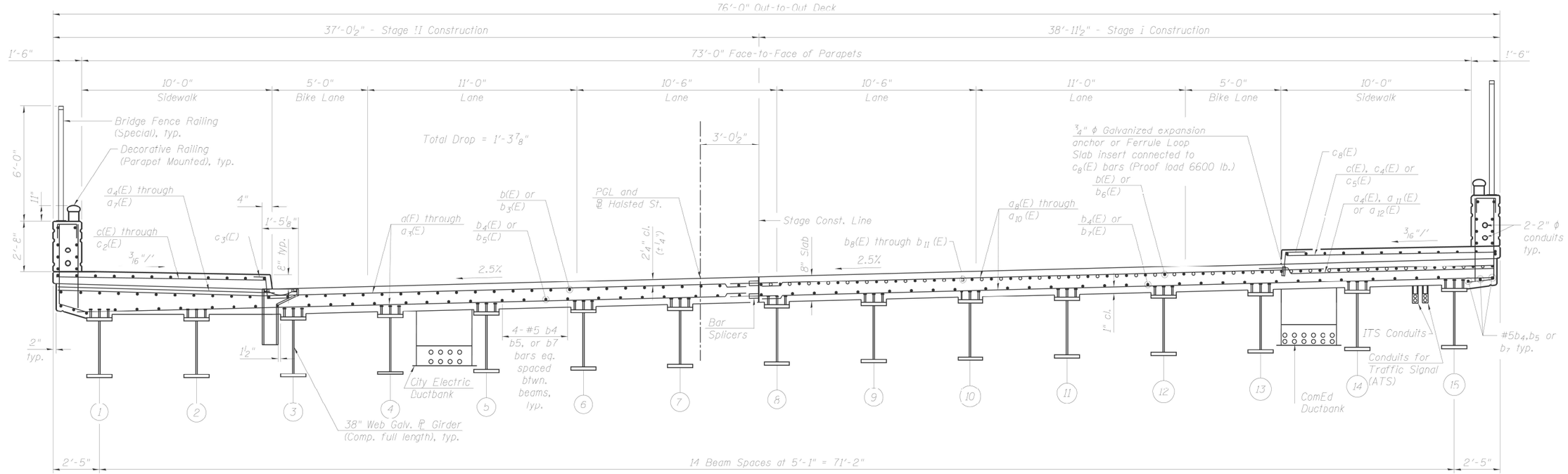

NEAR MIDSPAN

CROSS SECTION
(Looking North)

NEAR PIER

FOR INFORMATION ONLY

MODEL: Default
FILE NAME: pw:\\ildot-pw.bentley.com:PWIDOT\Documents\IDOT Offices\District 1\Projects\Circle Int\CADData\Design-sht-Lan3.dgn

USER NAME = naveed.hassan	DESIGNED -	REVISED -	STATE OF ILLINOIS DEPARTMENT OF TRANSPORTATION
	DRAWN -	REVISED -	
PLOT SCALE = 100.0000 ' / in.	CHECKED -	REVISED -	
PLOT DATE = 12/19/2022	DATE -	REVISED -	

LOCATION 17: S. HALSTED ST. OVER I-290 (SN: 016-1716)
EXISTING CROSS SECTIONS

SCALE: | SHEET OF SHEETS | STA. TO STA.

VAR. RTE.	SECTION	COUNTY	TOTAL SHEETS	SHEET NO.
VAR.	FAI VARIOUS BRIDGE SEALING	COOK	75	66
		CONTRACT NO. 62U35		
	ILLINOIS	FED. AID PROJECT		

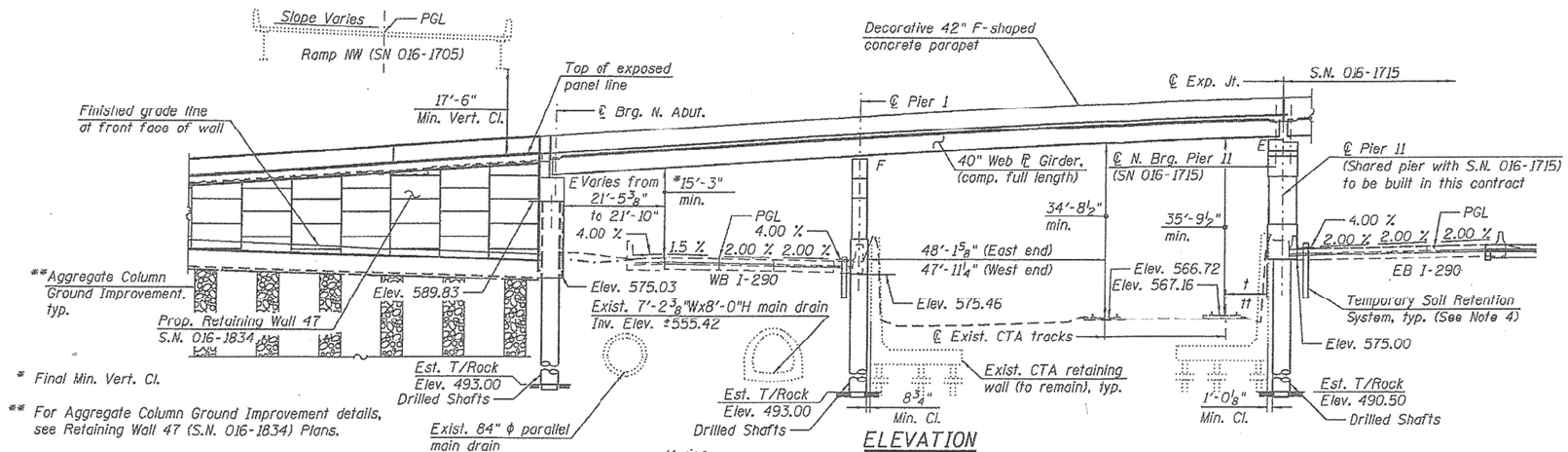

* Final Min. Vert. Cl.

** For Aggregate Column Ground Improvement details, see Retaining Wall 47 (S.N. 016-1834) Plans.

t= 9'-3 5/8" (East end)
tt= 9'-4 7/8" (West end)

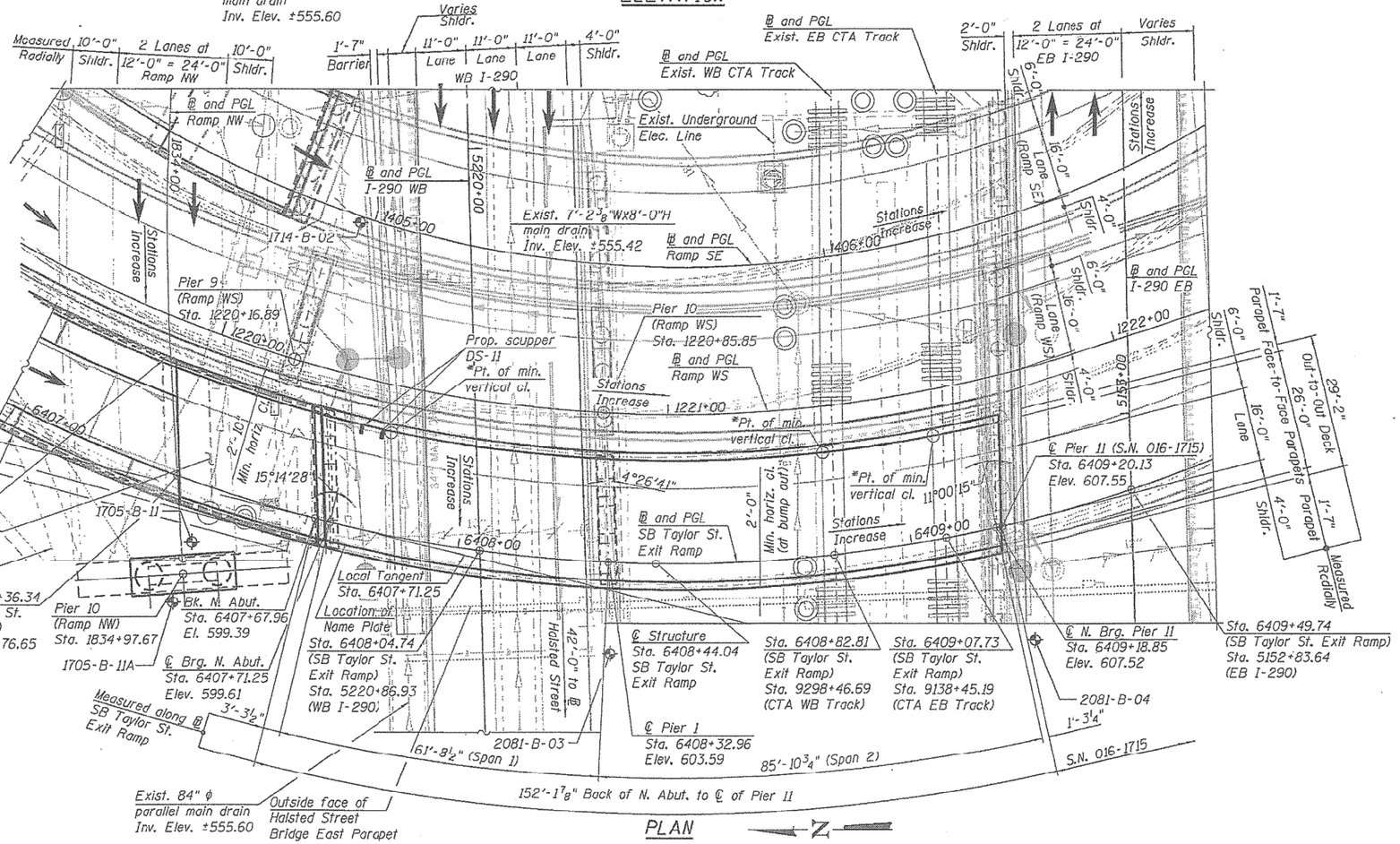

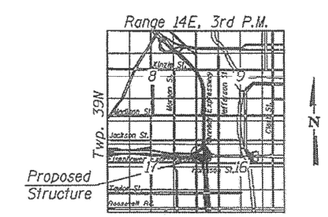

LOCATION SKETCH

GENERAL PLAN AND ELEVATION
SB TAYLOR ST. EXIT RAMP
OVER F.A.I. RTE. 290
(EISENHOWER EXPRESSWAY) AND CTA
F.A.I. RTE. 90/94/290
SECTION 2014-013R&B-R
COOK COUNTY
STATION 6408+44.04
STRUCTURE NO. 016-1718

FOR INFORMATION ONLY

MODEL: Default
FILE NAME: pw:\\illinois-pw.bentley.com:PWIDOT\Documents\IDOT Offices\District 1\Projects\Circle Int\CADData\Design-Shts\Plans.dgn

USER NAME = naveed.hassan	DESIGNED -	REVISED -	STATE OF ILLINOIS DEPARTMENT OF TRANSPORTATION
	DRAWN -	REVISED -	
PLOT SCALE = 100.0000 ' / in.	CHECKED -	REVISED -	
PLOT DATE = 12/19/2022	DATE -	REVISED -	

LOCATION 18: SB. TAYLOR ST. EXIT RAMP OVER I-290 & CTA (SN: 016-1718)
EXISTING PLAN & ELEVATION

SCALE: SHEET OF SHEETS STA. TO STA.

VAR. RTE.	SECTION	COUNTY	TOTAL SHEETS	SHEET NO.
VAR.	FAI VARIOUS BRIDGE SEALING	COOK	75	67
		CONTRACT NO. 62U35		
	ILLINOIS	FED. AID PROJECT		

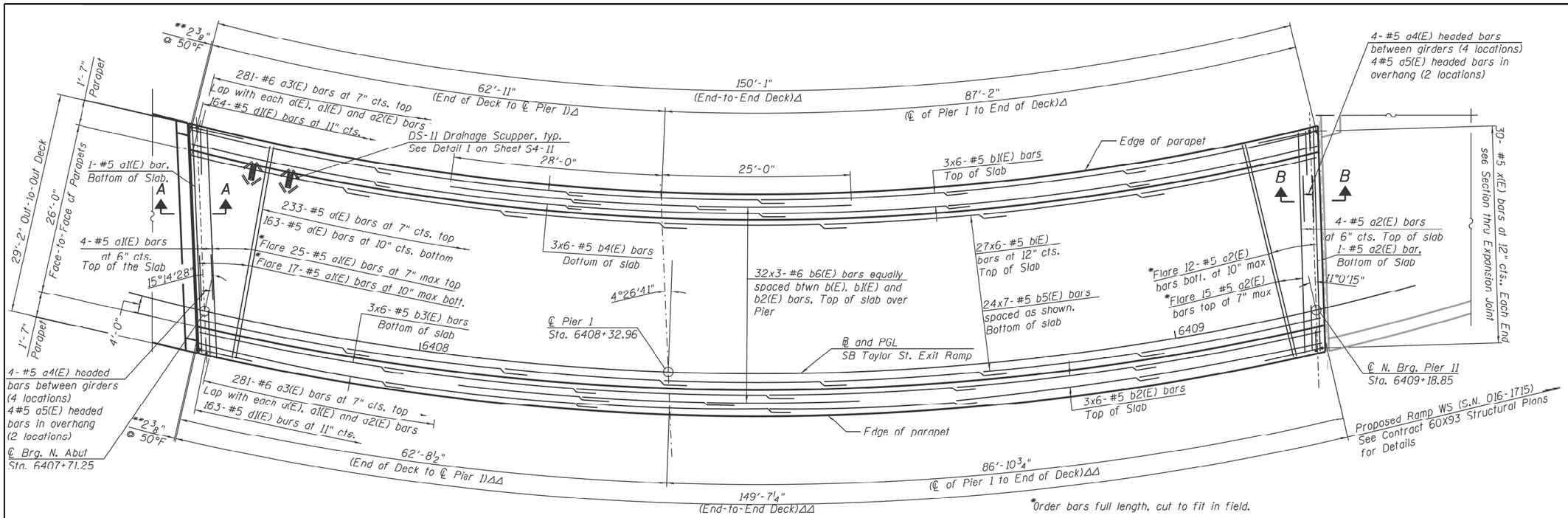

DECK PLAN

*Order bars full length, cut to fit in field.

**Dimension showing concrete opening. For joint opening, See Sheet S4-14 .

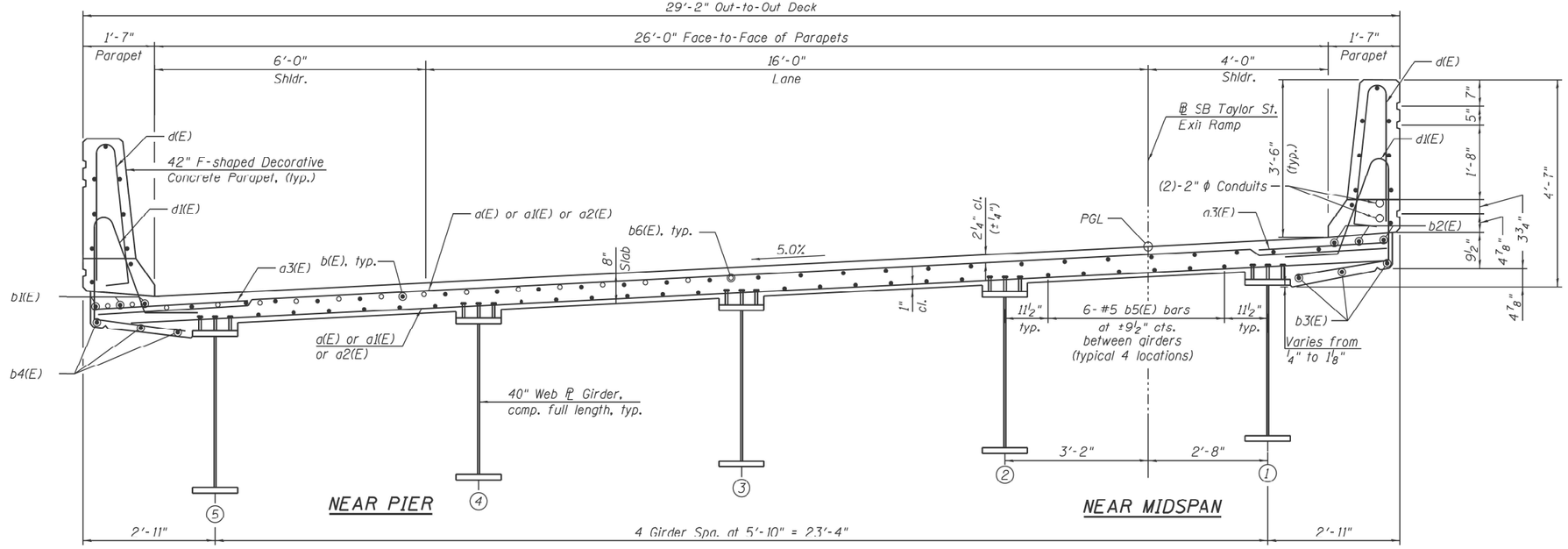

DECK CROSS SECTION
(Looking Upstation)

FOR INFORMATION ONLY

USER NAME = naveed.hassan	DESIGNED -	REVISED -	STATE OF ILLINOIS DEPARTMENT OF TRANSPORTATION
	DRAWN -	REVISED -	
PLOT SCALE = 100.0000 ' / in.	CHECKED -	REVISED -	
PLOT DATE = 12/19/2022	DATE -	REVISED -	

LOCATION 18: SB. TAYLOR ST. EXIT RAMP OVER I-290 & CTA (SN: 016-1718)
EXISTING CROSS SECTION

SCALE: | SHEET OF SHEETS | STA. TO STA.

VAR. RTE.	SECTION	COUNTY	TOTAL SHEETS	SHEET NO.
VAR.	FAI VARIOUS BRIDGE SEALING	COOK	75	68
		CONTRACT NO. 62U35		
	ILLINOIS	FED. AID PROJECT		

MODEL: Default
FILE NAME: pw:\\ildot-pw.bentley.com:PWIDOT\Documents\IDOT Offices\District 1\Projects\Circle Int\CADData\Design-sht-dgns*.dgn

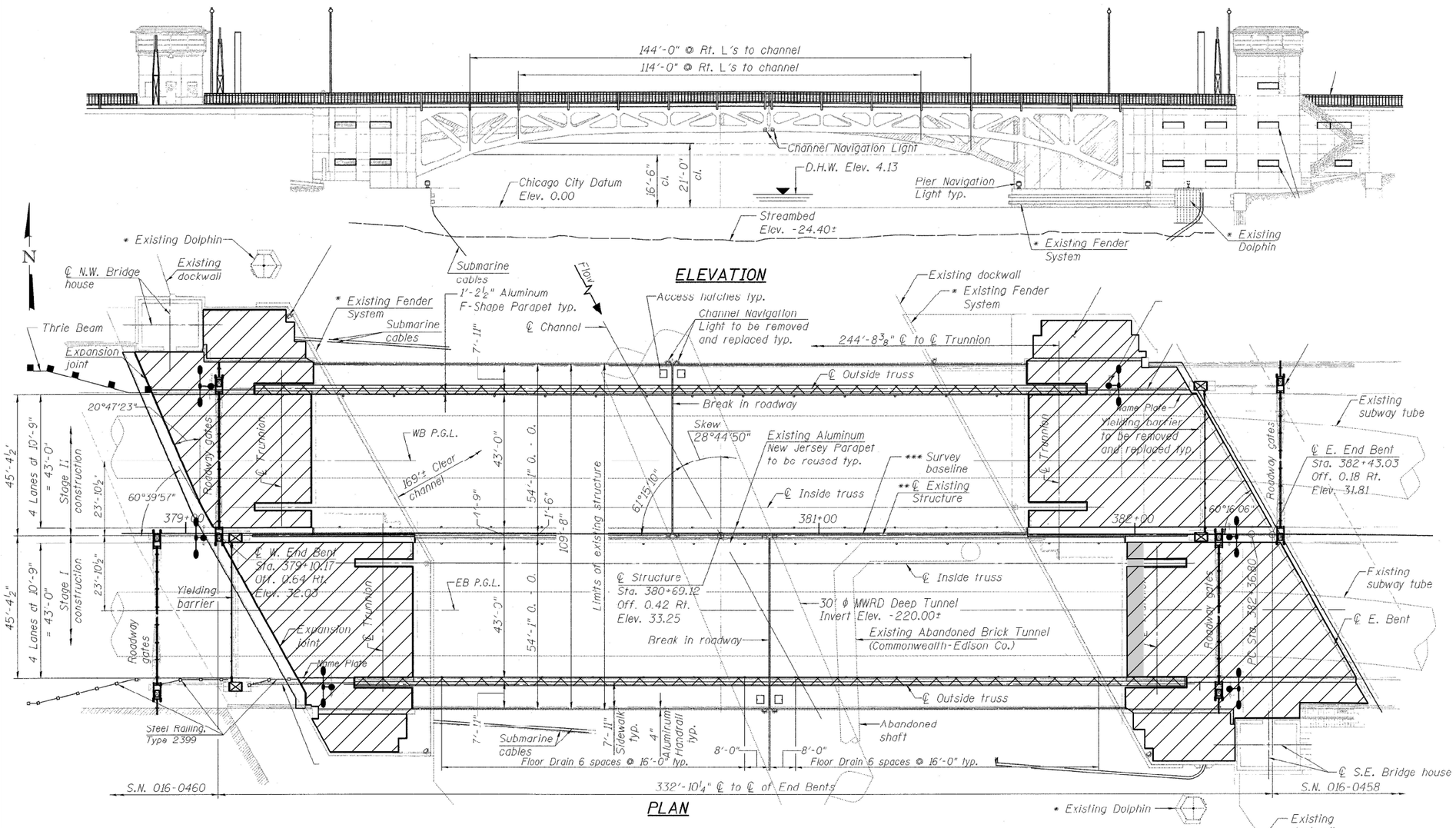

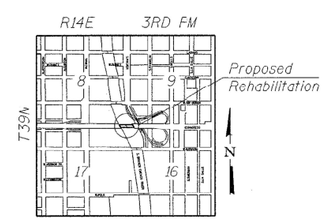

LOCATION SKETCH

LEGEND

- DECK SEALING ON FIXED SPANS ONLY (FOUR CORNERS)
- DECK SLAB REPAIR (PARTIAL)
- DEBRIS REMOVAL

GENERAL PLAN
CONGRESS PARKWAY OVER
SOUTH BRANCH CHICAGO RIVER
PUBLIC WATER
F.A.P. RT. 389 - SEC. 2424.2B-R
COOK COUNTY
STATION 380+69.12
STRUCTURE NO. 016-2445

USER NAME = naveed.hassan	DESIGNED -	REVISED -	
	DRAWN -	REVISED -	
PLOT SCALE = 100.0000 ' / in.	CHECKED -	REVISED -	
PLOT DATE = 12/19/2022	DATE -	REVISED -	

STATE OF ILLINOIS
DEPARTMENT OF TRANSPORTATION

LOCATION 19: CONGRESS PARKWAY OVER
S. BRANCH CHICAGO RIVER (SN: 016-2445)
EXISTING PLAN & ELEVATION

SCALE: | SHEET OF SHEETS | STA. TO STA.

VAR. RTE.	SECTION	COUNTY	TOTAL SHEETS	SHEET NO.
VAR.	FAI VARIOUS BRIDGE SEALING	COOK	75	69
		CONTRACT NO. 62U35		
	ILLINOIS	FED. AID PROJECT		

MODEL: Default
FILE NAME: pw:\\ildot-pw.bentley.com:PWIDOT\Documents\IDOT Offices\District 1\Projects\Circle Int\CADData\Design-SH-Ramp.dgn

STATE OF ILLINOIS
DEPARTMENT OF TRANSPORTATION

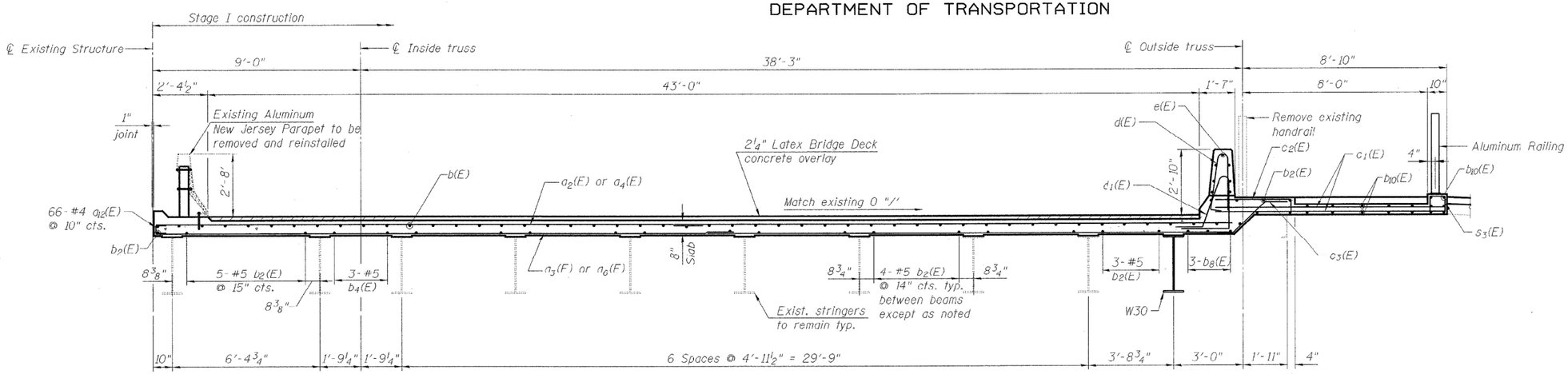

SECTION B-B

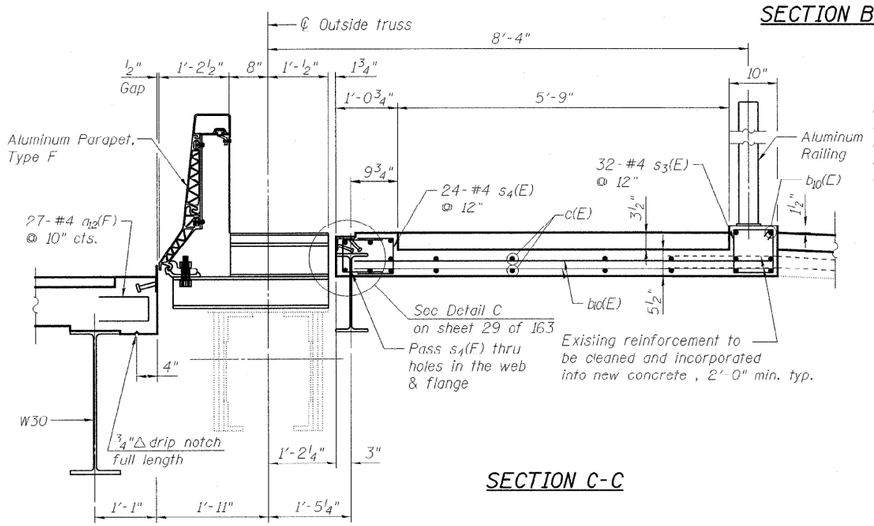

SECTION C-C

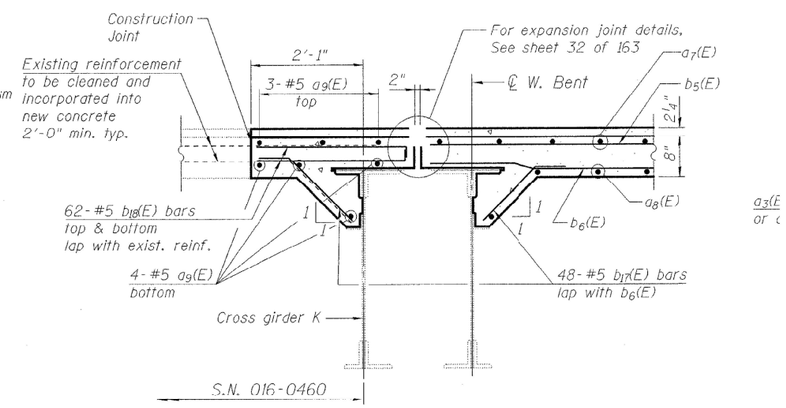

* SECTION D-D

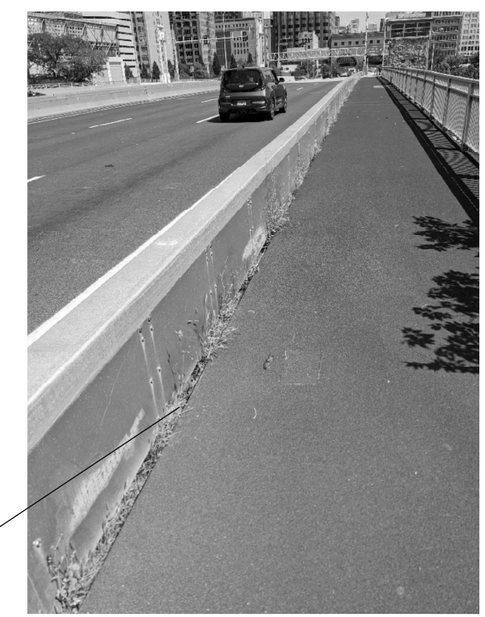

DEBRIS REMOVAL

FOR INFORMATION ONLY

USER NAME = naveed.hassan	DESIGNED -	REVISED -	STATE OF ILLINOIS DEPARTMENT OF TRANSPORTATION
	DRAWN -	REVISED -	
PLOT SCALE = 100.0000 ' / in.	CHECKED -	REVISED -	
PLOT DATE = 12/19/2022	DATE -	REVISED -	

LOCATION 19: CONGRESS PARKWAY OVER S. BRANCH CHICAGO RIVER (SN: 016-2445)
EXISTING CROSS SECTIONS

SCALE: | SHEET OF SHEETS | STA. TO STA.

VAR. RTE.	SECTION	COUNTY	TOTAL SHEETS	SHEET NO.
VAR.	FAI VARIOUS BRIDGE SEALING	COOK	75	70

CONTRACT NO. 62U35

ILLINOIS | FED. AID PROJECT

MODEL: Default
FILE NAME: pw:\\ildot-pw.bentley.com:PWIDOT\Documents\IDOT Offices\District 1\Projects\Circle Int\CADData\Design\sht-dsn4.dgn

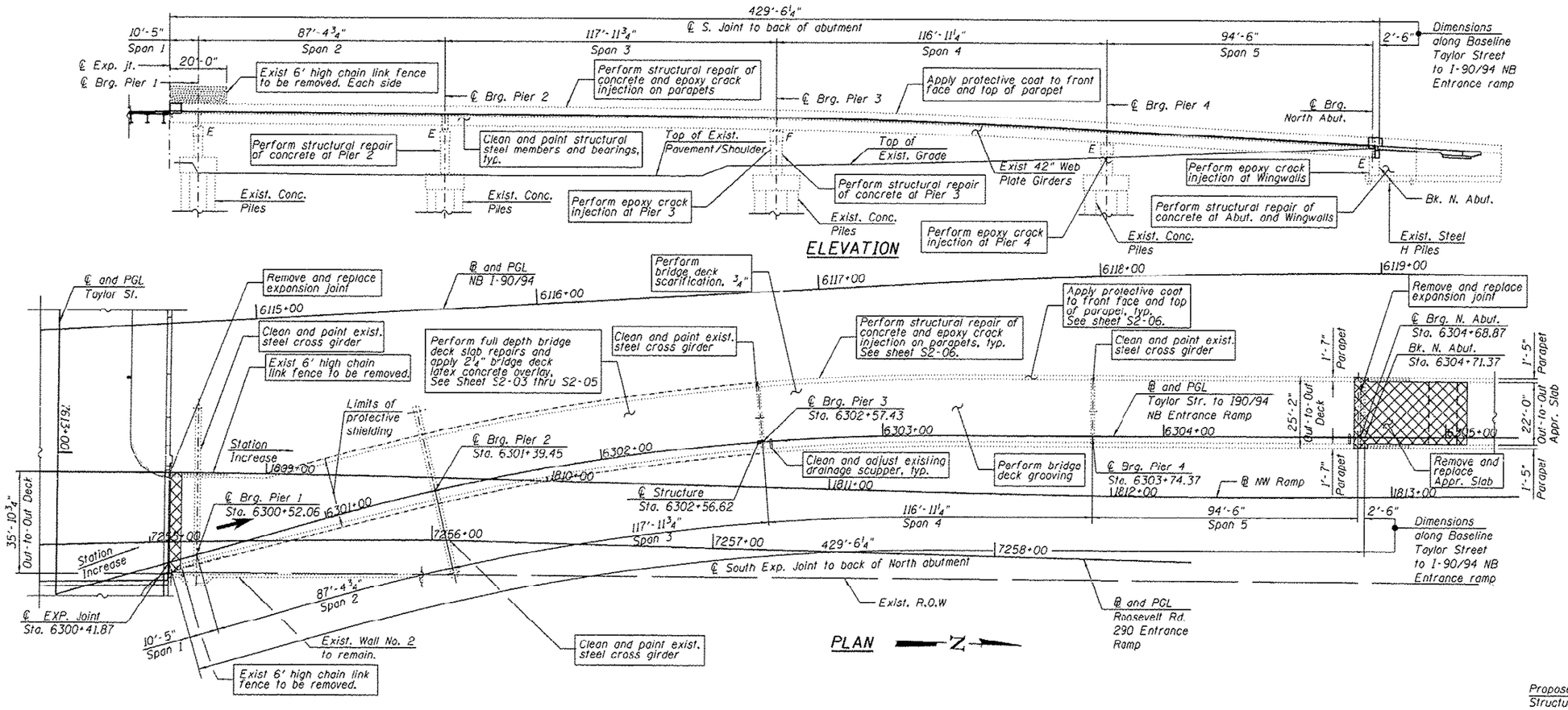

GENERAL PLAN & ELEVATION
TAYLOR ST. TO F.A.I. RTE. 90/94
NORTHBOUND ENTRANCE RAMP.
(DAN RYAN EXPRESSWAY)
F.A.I. RTE. 90/94 - SECTION 2013-012R
COOK COUNTY
STATION 6302+56.62
STRUCTURE NO. 016-2535

FOR INFORMATION ONLY

MODEL: Default
FILE NAME: pw:\\ildot-pw.bentley.com:PWIDOT\Documents\IDOT Offices\District 1\Projects\Circle Int\CADData\Design-OH-Ramp.dgn

USER NAME = naveed.hassan	DESIGNED -	REVISED -	STATE OF ILLINOIS DEPARTMENT OF TRANSPORTATION
	DRAWN -	REVISED -	
PLOT SCALE = 100.0000 ' / in.	CHECKED -	REVISED -	
PLOT DATE = 12/19/2022	DATE -	REVISED -	

LOCATION 20: ENTRANCE RAMP FROM TAYLOR ST. TO NB I-90/94 (SN: 016-2535)
EXISTING PLAN & ELEVATION

SCALE: | SHEET OF SHEETS | STA. TO STA.

VAR. RTE.	SECTION	COUNTY	TOTAL SHEETS	SHEET NO.
VAR.	FAI VARIOUS BRIDGE SEALING	COOK	75	71

CONTRACT NO. 62U35

ILLINOIS | FED. AID PROJECT

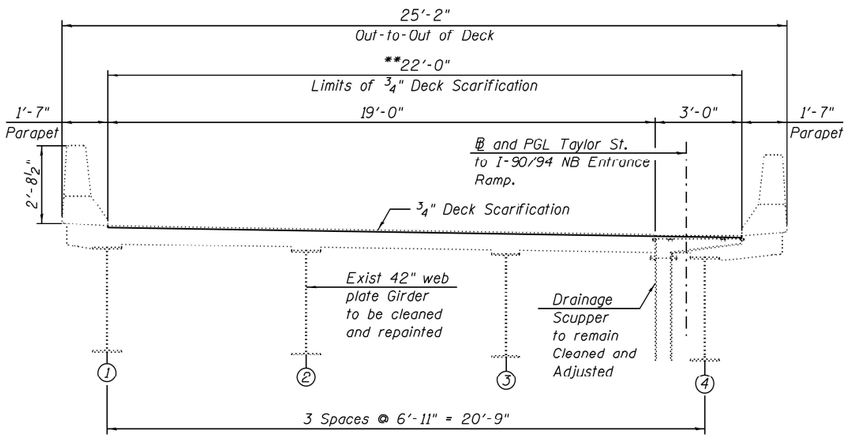

REMOVAL
(Station 6300+86.78 to Station 6304+68.00)
(Looking Upstation)

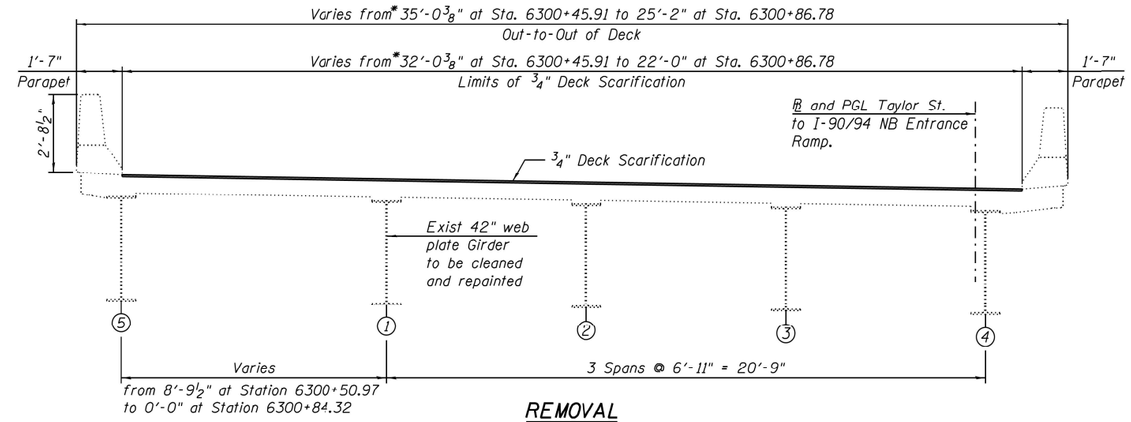

REMOVAL
(Station 6300+45.91 to Station 6300+86.78)
(Looking Upstation)

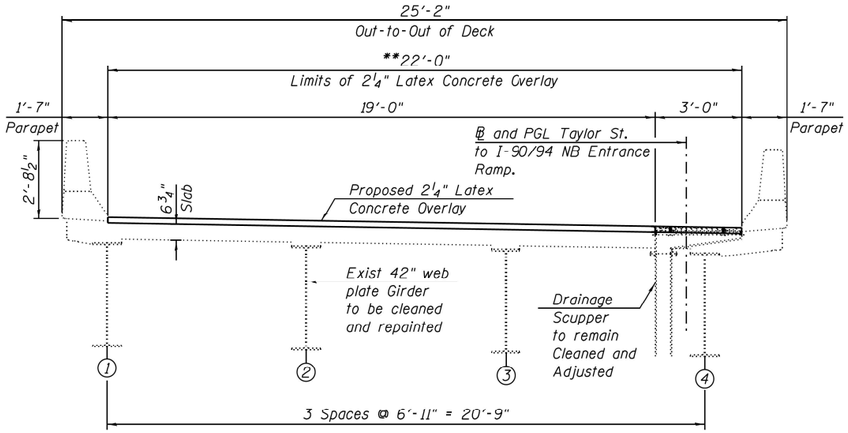

CONSTRUCTION
(Station 6300+86.78 to Station 6304+68.00)
(Looking Upstation)

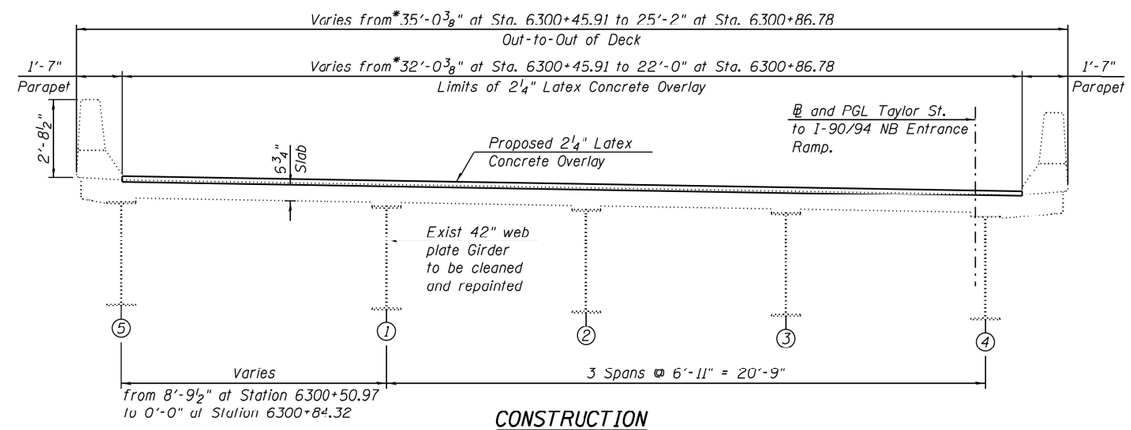

CONSTRUCTION
(Station 6300+45.91 to Station 6300+86.78)
(Looking Upstation)

FOR INFORMATION ONLY

MODEL: Default
FILE NAME: pw:\\ildot-pw.bentley.com:PWIDOT\Documents\IDOT Offices\District 1\Projects\Circle Int\CADData\Design-sht-data.dgn

USER NAME = naveed.hassan	DESIGNED -	REVISED -	STATE OF ILLINOIS DEPARTMENT OF TRANSPORTATION
	DRAWN -	REVISED -	
PLOT SCALE = 100.0000 ' / in.	CHECKED -	REVISED -	
PLOT DATE = 12/19/2022	DATE -	REVISED -	

LOCATION 20: ENTRANCE RAMP FROM TAYLOR ST. TO NB I-90/94 (SN: 016-2535)
EXISTING CROSS SECTIONS

SCALE: | SHEET OF SHEETS | STA. TO STA.

VAR. RTE.	SECTION	COUNTY	TOTAL SHEETS	SHEET NO.
VAR.	FAI VARIOUS BRIDGE SEALING	COOK	75	72
		CONTRACT NO. 62U35		
	ILLINOIS	FED. AID PROJECT		

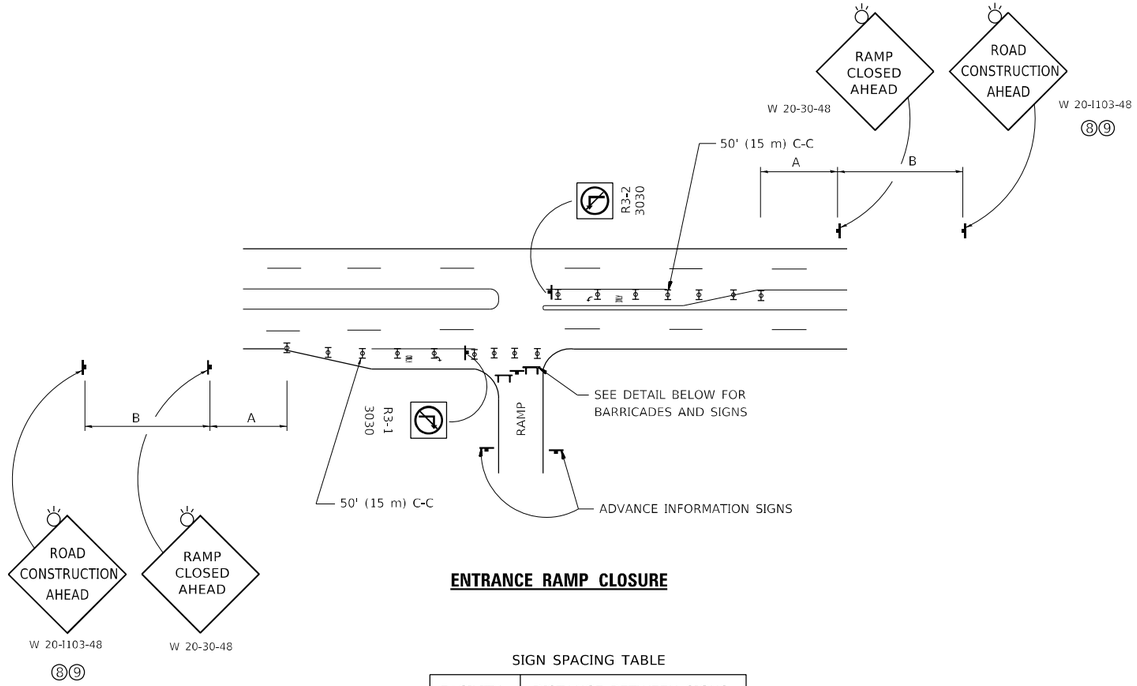

ENTRANCE RAMP CLOSURE

SIGN SPACING TABLE

FACILITY	DISTANCE BETWEEN SIGNS	
	A	B
EXPRESSWAY >24 HOURS	1000' (300 m)	1500' (450 m)
EXPRESSWAY ≤24 HOURS	500' (150 m)	500' (150 m)
ARTERIAL 55 MPH	500' (150 m)	500' (150 m)
ARTERIAL 50-45 MPH	350' (100 m)	350' (100 m)
ARTERIAL <45 MPH	200' (60 m)	200' (60 m)

DISTANCES MAY BE SHORTENED DEPENDING UPON THE PROXIMITY OF ADJACENT RAMPS OR INTERSECTIONS.

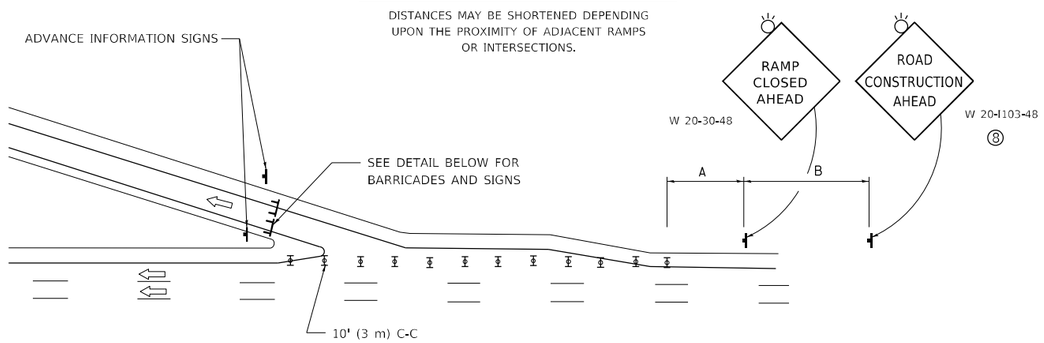

EXIT RAMP CLOSURE

SYMBOLS

TYPE II BARRICADE OR DRUM

TYPE III BARRICADE WITH 2 FLASHING LIGHTS

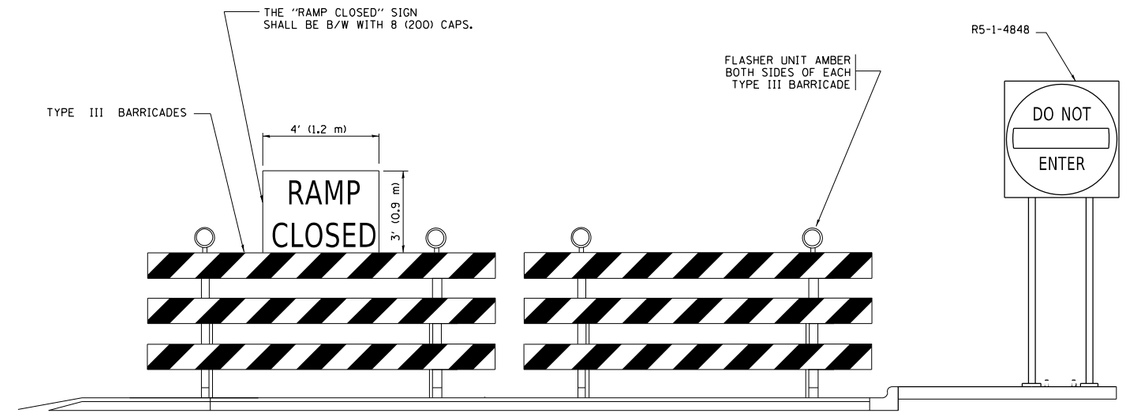

DETAIL FOR REQUIRED BARRICADES & SIGNS

RAMP CLOSURE ADVANCE WARNING SIGN

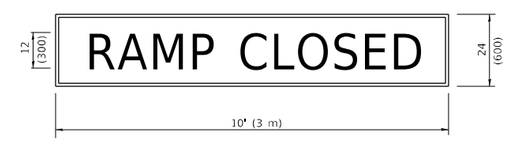

BLACK LEGEND ON ORANGE BACKGROUND MOUNTED DIAGONALLY
E MOD FONT
1 (25) BORDER

THESE SIGNS ARE REQUIRED ON ALL THE EXIT GUIDE SIGNS FOR EXIT RAMPS THAT WILL BE CLOSED FOR MORE THAN FOUR (4) CONSECUTIVE DAYS.

RAMP CLOSURE ADVANCE INFORMATION SIGN

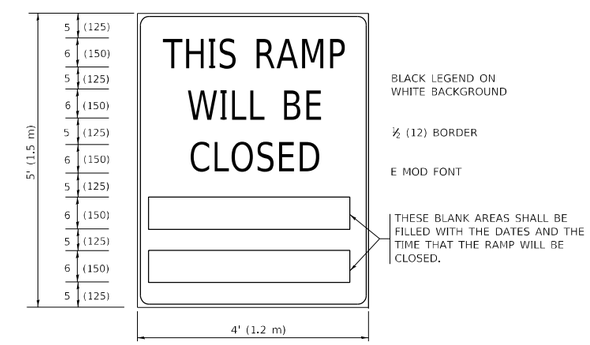

THESE SIGNS ARE REQUIRED ON BOTH SIDES OF THE RAMP, MINIMUM OF 1 WEEK IN ADVANCE OF THE CLOSURE.

THESE SIGNS SHALL BE FABRICATED AND PAID FOR ACCORDING TO THE TEMPORARY INFORMATION SIGNING SPECIAL PROVISION

GENERAL NOTES:

1. CONES MAY BE SUBSTITUTED FOR DRUMS OR TYPE II BARRICADES DURING DAY OPERATIONS. CONES SHALL BE A MINIMUM OF 28 (700) HIGH.
2. VERTICAL BARRICADES SHALL NOT BE USED FOR RAMP CLOSURES.
3. A FLAGGER SHALL BE POSITIONED AT EACH CLOSED RAMP THAT IS OPEN TO CONSTRUCTION VEHICLES, PRECEEDED BY A W20-7 FLAGGER WARNING SIGN.
4. ALL ROUTE MARKERS AND TRAILBLAZER ASSEMBLIES WHICH DIRECT MOTORISTS TO A CLOSED ENTRANCE RAMP SHALL BE COVERED WHEN THE RAMP IS CLOSED FOR MORE THAN FOUR (4) DAYS.
5. THE SIGNING AND BARRICADING WHICH IS REQUIRED BY THIS DETAIL SHALL BE INCLUDED IN THE COST OF TRAFFIC CONTROL AND PROTECTION (EXPRESSWAYS).
6. AUTHORIZATION FROM THE DISTRICT'S BUREAU OF TRAFFIC IS REQUIRED FOR ALL RAMP CLOSURES.
7. THE RAMP CLOSURE ADVANCE INFORMATION SIGNS SHALL BE ERECTED IF THE CLOSURE TIME EXCEEDS TWENTY-FOUR (24) HOURS. ADDITIONAL ADVANCE WARNING SIGNS ON EXIT GUIDE SIGNING WILL BE REQUIRED FOR EXIT RAMP CLOSURES THAT EXCEED FOUR (4) DAYS IN LENGTH
8. ROAD CONSTRUCTION AHEAD SIGNS MAY BE OMITTED WHEN THIS DETAIL IS USED IN CONJUNCTION WITH OTHER TRAFFIC CONTROL THAT ALREADY INCLUDES A ROAD CONSTRUCTION AHEAD SIGN.
9. ARTERIAL ROAD CONSTRUCTION AHEAD SIGNS SHALL BE INSTALLED ON THE LEFT SIDE OF TRAFFIC IF THE MEDIAN IS MORE THAN 10 FT WIDE.

ALL DIMENSIONS ARE IN INCHES (MILLIMETERS) UNLESS OTHERWISE SHOWN.

MODEL: Default
FILE NAME: pw:\\ildot-ew.bentley.com:PWIDOT\Documents\IDOT Offices\District 1\Projects\Circle Int\CAD\zzz\Design\Dist\Sht.dgn

USER NAME = naveed.hassan	DESIGNED - D.W.S.	REVISED - S.P.B._01-07	STATE OF ILLINOIS DEPARTMENT OF TRANSPORTATION
	DRAWN -	REVISED - S.P.B._12-09	
PLOT SCALE = 100.0039 ' / in.	CHECKED -	REVISED - M.D._06-13	
PLOT DATE = 12/20/2022	DATE - 02-83	REVISED - M.D._01-18	

ENTRANCE_AND_EXIT_RAMP CLOSURE_DETAILS

SCALE: NONE | SHEET 1 OF 1 SHEETS | STA. TO STA.

VAR. RTE.	SECTION	COUNTY	TOTAL SHEETS	SHEET NO.
VAR.	FAI VARIOUS BRIDGE SEALING	COOK	75	73
	TC-08	CONTRACT NO. 62U35		
	ILLINOIS FED. AID PROJECT			

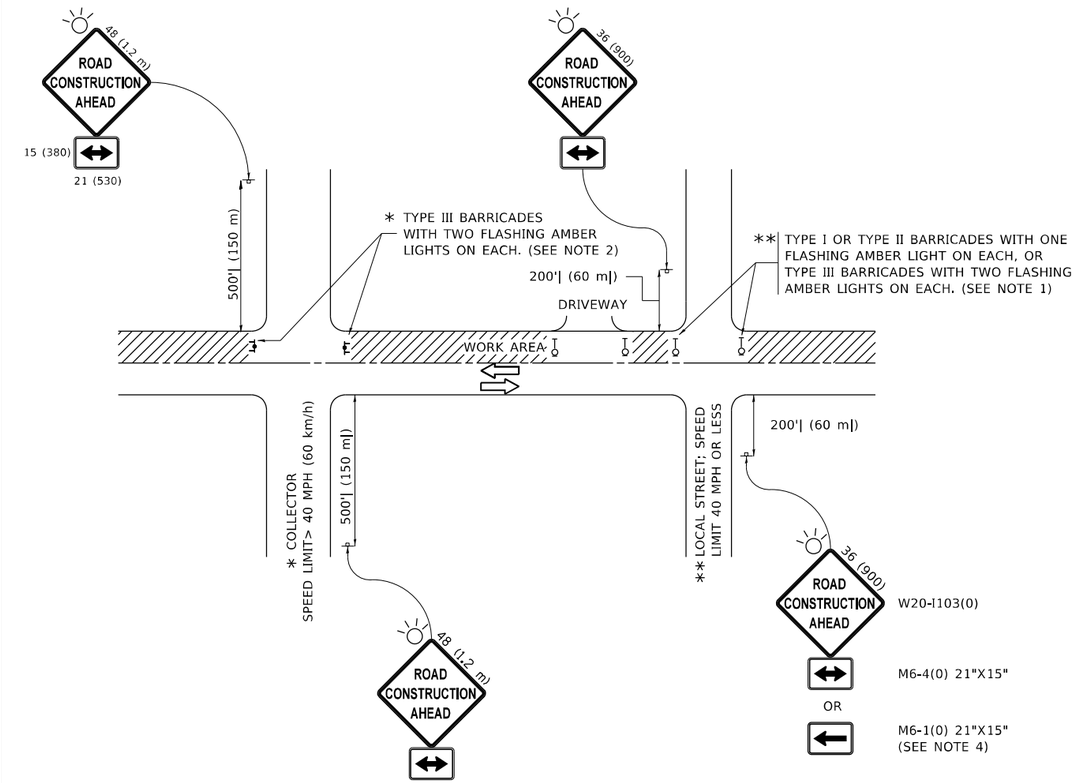

NOTES:

1. SIDE ROAD WITH A SPEED LIMIT OF 40 MPH (60 km/h) OR LESS AS SHOWN ON THE DRAWING AND AS DIRECTED BY THE ENGINEER:

   a) ONE "ROAD CONSTRUCTION AHEAD" SIGN 36 x 36 (900x900) WITH A FLASHER MOUNTED ON IT APPROXIMATELY 200' (60 m) IN ADVANCE OF THE MAIN ROUTE.

   b) THE CLOSED PORTION OF THE MAIN ROUTE SHALL BE PROTECTED BY BLOCKING WITH TYPE I, TYPE II OR TYPE III BARRICADES, 1/3 OF THE CROSS SECTION OF THE CLOSED PORTION.

2. SIDE ROAD WITH A SPEED LIMIT GREATER THAN 40 MPH (60 km/h) AS SHOWN ON THE DRAWING AND AS DIRECTED BY THE ENGINEER:

   a) ONE "ROAD CONSTRUCTION AHEAD" SIGN 48 x 48 (1.2 m x 1.2 m) WITH A FLASHER MOUNTED ON IT APPROXIMATELY 500' (150 m) IN ADVANCE OF THE MAIN ROUTE.

   b) THE CLOSED PORTION OF THE MAIN ROUTE SHALL BE PROTECTED BY BLOCKING WITH TYPE III BARRICADES, 1/2 OF THE CROSS SECTION OF THE CLOSED PORTION.

3. CONES MAY BE SUBSTITUTED FOR BARRICADES OR DRUMS AT HALF THE SPACING DURING DAY OPERATIONS. CONES SHALL BE A MINIMUM OF 28 (710) IN HEIGHT.

4. WHEN THE SIDE ROAD LIES BETWEEN THE BEGINNING OF THE MAINLINE SIGNING AND THE WORK ZONE, A SINGLE HEADED ARROW (M6-1) SHALL BE USED IN LIEU OF THE DOUBLE HEADED ARROW (M6-4).

5. WHEN WORK IS BEING PERFORMED ON A SIDE ROAD OR DRIVEWAY, FOLLOW THE APPLICABLE STANDARD(S). THE DIRECTIONAL ARROW (M6-1 OR M6-4) SHALL BE COVERED OR REMOVED WHEN NO LONGER CONSISTENT WITH THE TRAFFIC CONTROL SET-UP.

6. ADVANCE WARNING SIGNS ARE TO BE OMITTED ON DRIVEWAYS UNLESS OTHERWISE SPECIFIED IN THE PLANS OR BY THE ENGINEER.

7. THE TRAFFIC CONTROL AND PROTECTION FOR SIDE ROADS, INTERSECTIONS, AND DRIVEWAYS SHALL BE INCLUDED IN THE COST OF SPECIFIED TRAFFIC CONTROL STANDARDS OR ITEMS.

All dimensions are in inches (millimeters) unless otherwise shown.

USER NAME = naveed.hassan	DESIGNED - L.H.A.	REVISED - A. HOUSEH 10-15-96	
	DRAWN -	REVISED - T. RAMMACHER 01-06-00	
PLOT SCALE = 100.0354 ' / in.	CHECKED -	REVISED - A. SCHUETZE 07-01-13	
PLOT DATE = 12/21/2022	DATE - 06-89	REVISED - A. SCHUETZE 09-15-16	

STATE OF ILLINOIS
DEPARTMENT OF TRANSPORTATION

TRAFFIC CONTROL AND PROTECTION FOR SIDE ROADS, INTERSECTIONS, AND DRIVEWAYS

SCALE: NONE | SHEET 1 OF 1 SHEETS | STA. TO STA.

VAR. RTE.	SECTION	COUNTY	TOTAL SHEETS	SHEET NO.
VAR.	FAI VARIOUS BRIDGE SEALING	COOK	75	73A
	TC-10	CONTRACT NO. 62U35		
	ILLINOIS	FED. AID PROJECT		

MODEL: Default
FILE NAME: pw:\\ildot-cw.bentley.com:PWIDOT\Documents\IDOT Offices\District 1\Projects\Civil4- Int\CADData\Design\DistStd.dgn

TURN BAY ENTRANCE AT START OF LANE CLOSURE TAPER

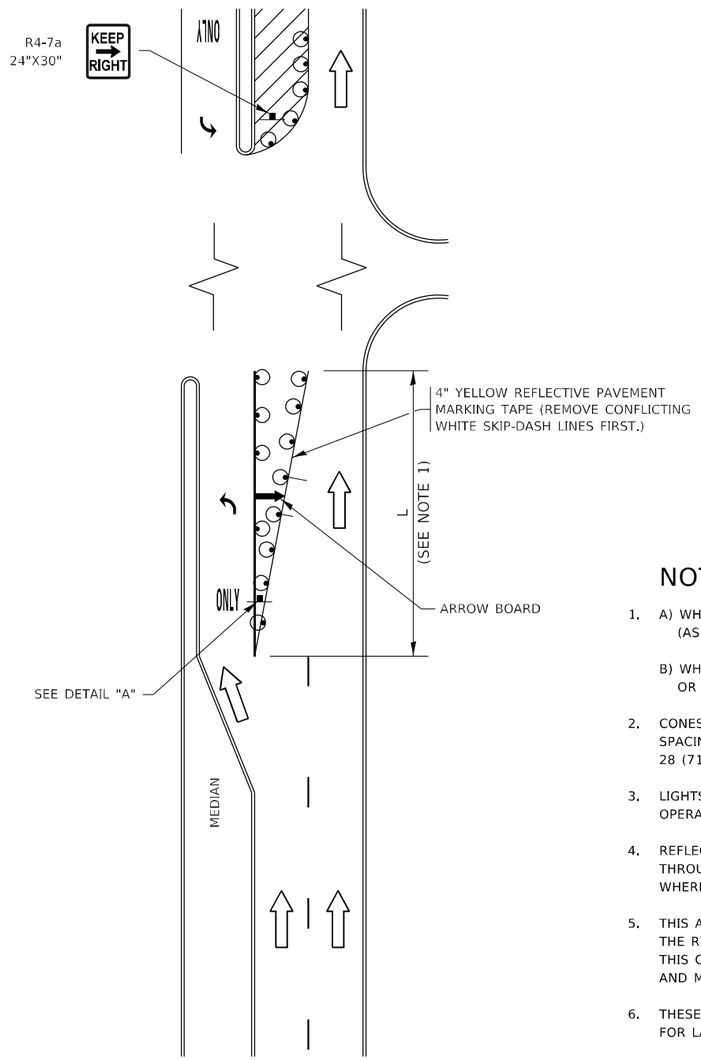

FIGURE 1

LEGEND

- WORK AREA
- LANE OPEN TO TRAFFIC
- ARROW BOARD
- TYPE I OR II BARRICADE OR DRUM WITH STEADY BURN LIGHT
- DRUM WITH STEADY BURN LIGHT
- SIGN ASSEMBLY
- TYPE I OR II CHECK BARRICADE WITH FLASHING LIGHT

NOTES:

1. A) WHEN "L" IS ≤ THE STORAGE LENGTH OF THE TURN LANE (AS SHOWN IN FIG. 1), USE FIGURE 1.

   B) WHEN "L" IS > THE STORAGE LENGTH OF THE TURN LANE OR THE TURN LANE IS WITHIN THE LANE CLOSURE, USE FIGURE 2.

2. CONES MAY BE SUBSTITUTED FOR BARRICADES OR DRUMS AT HALF THE SPACING DURING DAY OPERATIONS. CONES SHALL BE A MINIMUM OF 28 (710) IN HEIGHT.

3. LIGHTS WILL NOT BE REQUIRED ON BARRICADES OR DRUMS FOR DAY OPERATIONS. ALL LIGHTS SHALL BE MONODIRECTIONAL.

4. REFLECTIVE TEMPORARY PAVEMENT MARKINGS SHALL BE PLACED THROUGHOUT THE BARRICADED AREAS OF EACH TURN BAY AS SHOWN WHERE THE CLOSURE TIME IS GREATER THAN FOURTEEN (14) DAYS.

5. THIS APPLICATION ALSO APPLIES WHEN WORK IS BEING PERFORMED IN THE RIGHT LANE(S) AND THE RIGHT TURN BAY IS TO REMAIN OPEN. UNDER THIS CONDITION, "RIGHT TURN LANE" R3-I100R 24 x 24 (600 x 600) AND M6-2R 21 x 15 (530 x 380) SHALL BE USED.

6. THESE CONTROLS SHALL SUPPLEMENT MAINLINE TRAFFIC CONTROL FOR LANE CLOSURES.

7. THE SIGNS SHALL BE MOUNTED ABOVE THE BARRICADES/DRUMS ON SEPARATE SIGN SUPPORTS THAT MEET NCHRP 350 OR MASH PREQUIREMENTS.

8. TRAFFIC CONTROL AND PROTECTION AT TURN BAYS (TO REMAIN OPEN TO TRAFFIC) SHALL BE INCLUDED IN THE COST OF SPECIFIED TRAFFIC CONTROL STANDARDS OR ITEMS.

TURN BAY ENTRANCE WITHIN A LANE CLOSURE

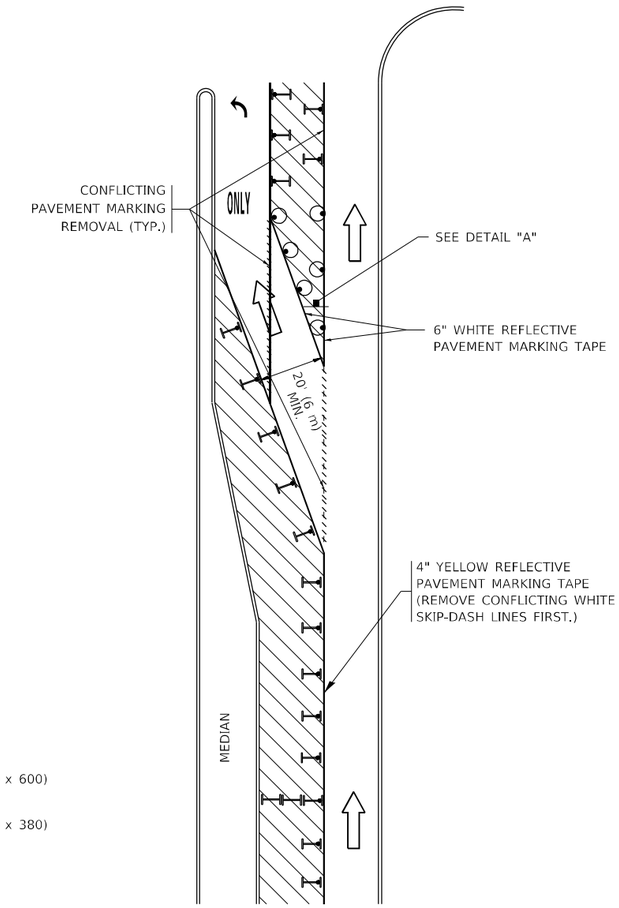

FIGURE 2

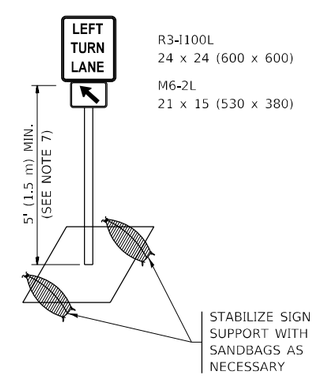

DETAIL A

All dimensions are in inches (millimeters) unless otherwise shown.

MODEL: Default
FILE NAME: pw:\\ildot-pw.bentley.com:PWIDOT\Documents\IDOT Offices\District 1\Projects\Civil\CADData\Design\DistStd.dgn

USER NAME = naveed.hassan	DESIGNED - T. RAMMACHER 09-08-94	REVISED - R. BORO 09-14-09	STATE OF ILLINOIS DEPARTMENT OF TRANSPORTATION
	DRAWN - A. HOUSEH 11-07-95	REVISED - A. SCHUETZE 07-01-13	
PLOT SCALE = 100.0300 ' / in.	CHECKED - A. HOUSEH 10-12-96	REVISED - A. SCHUETZE 09-15-16	
PLOT DATE = 12/20/2022	DATE - T. RAMMACHER 01-06-00	REVISED -	

TRAFFIC CONTROL AND PROTECTION AT TURN BAYS (TO REMAIN OPEN TO TRAFFIC)

SCALE: NONE | SHEET 1 OF 1 SHEETS | STA. TO STA.

VAR. RTE.	SECTION	COUNTY	TOTAL SHEETS	SHEET NO.
VAR.	FAI VARIOUS BRIDGE SEALING	COOK	75	74
	TC-14	CONTRACT NO. 62U35		
		ILLINOIS	FED. AID PROJECT	

PARTIAL RAMP CLOSURE DETAILS

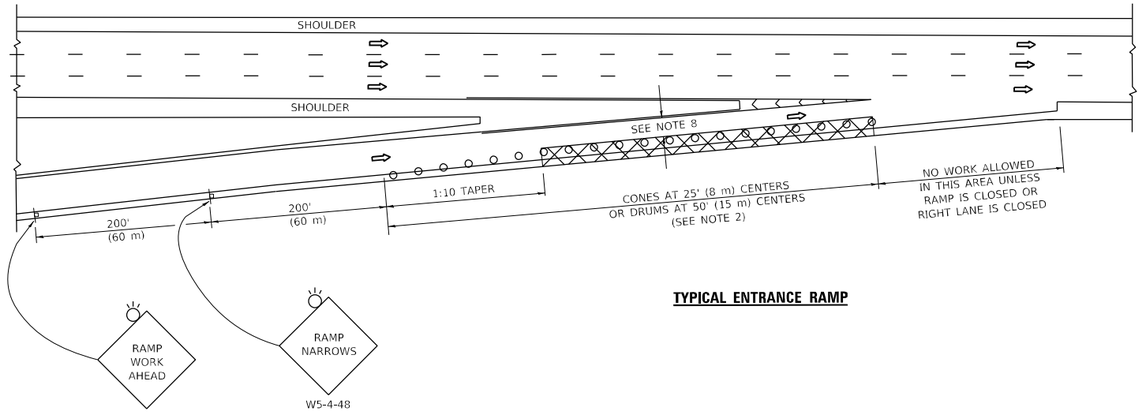

TYPICAL ENTRANCE RAMP

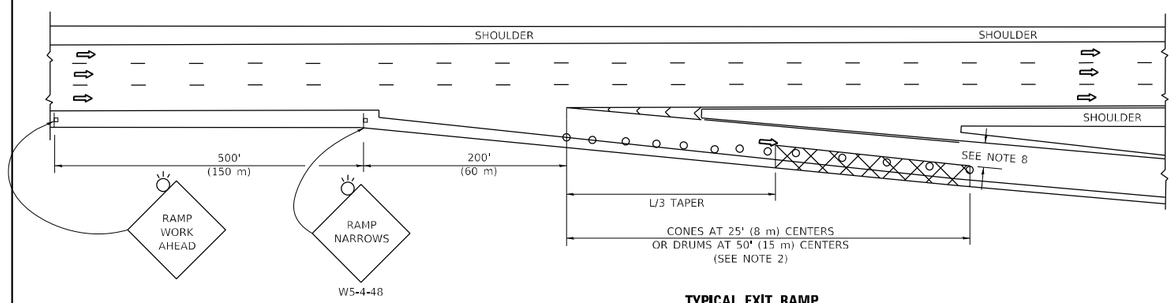

TYPICAL EXIT RAMP

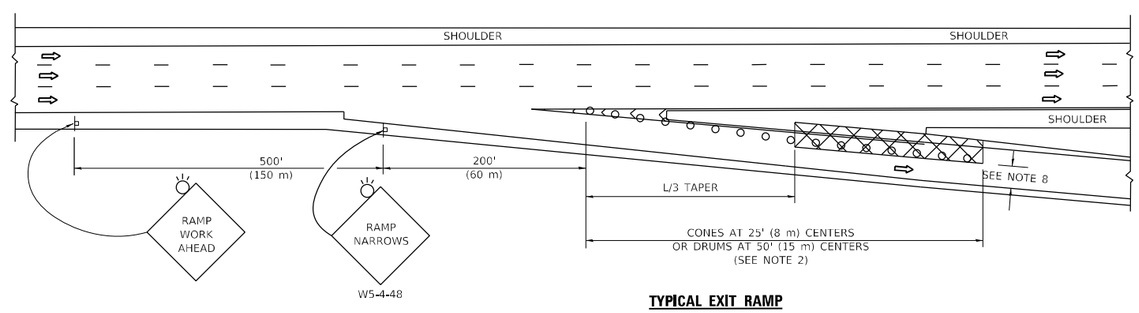

TYPICAL EXIT RAMP

SHOULDER CLOSURE DETAILS

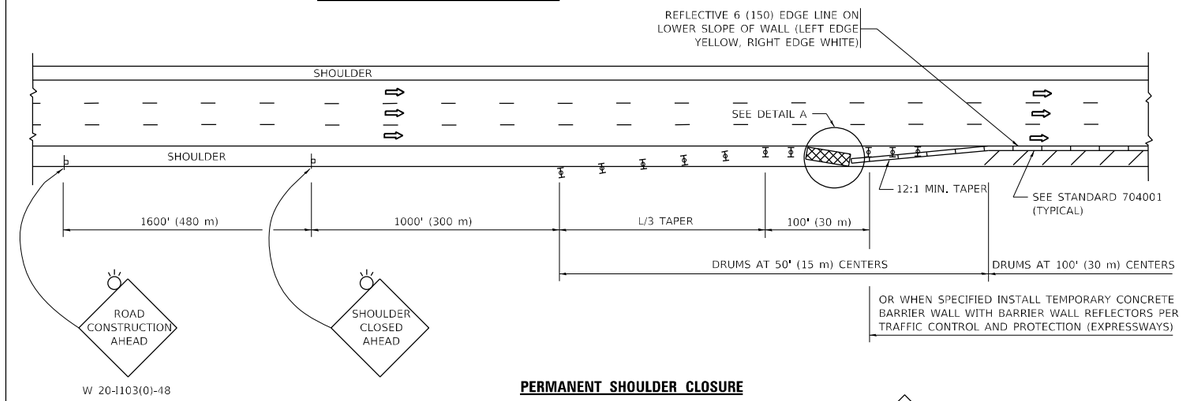

PERMANENT SHOULDER CLOSURE

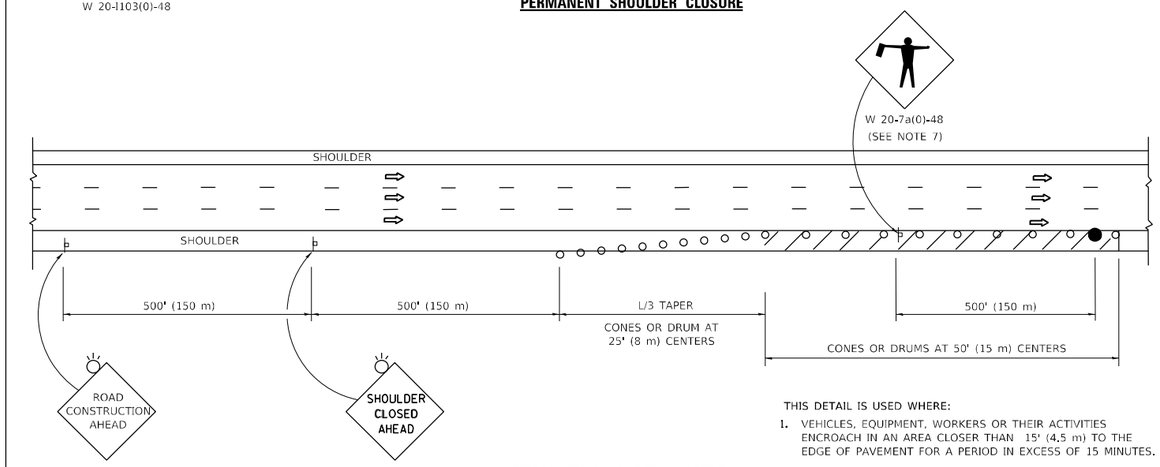

TEMPORARY SHOULDER CLOSURE

THIS DETAIL IS USED WHERE:

1. VEHICLES, EQUIPMENT, WORKERS OR THEIR ACTIVITIES ENCROACH IN AN AREA CLOSER THAN 15' (4.5 m) TO THE EDGE OF PAVEMENT FOR A PERIOD IN EXCESS OF 15 MINUTES.

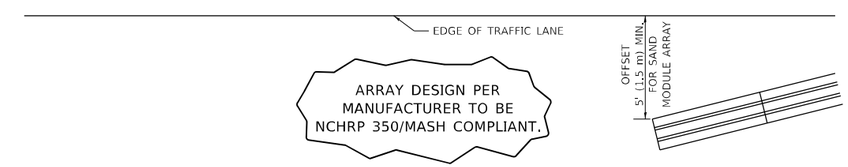

DETAIL "A"
IMPACT ATTENTUATOR, TEMPORARY
(SEE NOTE 5)

SYMBOLS

- ACTIVE WORK AREA
- SIGN ON PORTABLE OR PERMANENT SUPPORT
- FLAGGER WITH CONTROL SIGN
- TYPE II BARRICADE OR DRUM
- CONE, DRUM OR BARRICADE
- IMPACT ATTENUATOR OF TYPE AND TEST LEVEL SPECIFIED

GENERAL NOTES:

1. THE "L" DISTANCE EQUALS:

SPEED LIMIT	FORMULAS METRIC	FORMULAS ENGLISH
45 mph (80 km/h) OR GREATER:	L=0.65(W)(S)	L=(W)(S)

W = WIDTH OF OFFSET IN FEET (METERS)
S = NORMAL POSTED SPEED MPH (KM/H)

2. TYPE II BARRICADES OR DRUMS ARE REQUIRED FOR ALL NIGHTTIME CLOSURES. TYPE II BARRICADES OR DRUMS WITH MONODIRECTIONAL STEADY BURN LIGHTS ARE REQUIRED FOR DELINEATING OBSTICLES, EXCAVATIONS, OR HAZARDS EXCEEDING 100 FT (30m) IN LENGTH AT NIGHT.
3. ALL SIGNS SHALL BE POST MOUNTED IF THE CLOSURE TIME EXCEEDS FOUR DAYS.
4. FLASHING LIGHTS SHALL BE USED DURING THE HOURS OF DARKNESS AND SHALL BE INSTALLED ABOVE THE FIRST TWO SETS OF SIGNS.
5. THE IMPACT ATTENTUATOR, TEMPORARY IS NOT REQUIRED WHEN THE TEMPORARY CONCRETE BARRIER WALL IS PROTECTED BY OR IS TIED INTO THE EXISTING GUARDRAIL. IF OFFSET IS LESS THAN 5 FEET USE NARROW USE TYPE DEVICE TO MEET NCHRP350/MASH.
6. AUTHORIZATION FROM THE DISTRICT'S BUREAU OF TRAFFIC IS REQUIRED FOR ALL FREEWAY CLOSURES.
7. THE FLAGGER AND FLAGGER SIGN ARE REQUIRED AT THE ABOVE WORK SITES WHEN:
   a. FOUR OR MORE WORK VEHICLES ENTER THE TRAFFIC LANES IN A ONE HOUR PERIOD.
   b. THE WORK AVTIVITY REQUIRES FREQUENT ENCROACHMENT INTO THE LANE OPEN TO TRAFFIC.

   THE FLAGGER SHALL BE STATIONED APPROXIMATELY 100' (30 m) TO 200' (60 m) IN ADVANCE OF THE WORKERS.
8. 12' MIN. WIDTH TANGENT SECTION
   16' MIN. WIDTH CURVE SECTION.
9. TEMPORARY SHOULDER AND NON-SYSTEM INTERCHANGE PARTIAL RAMP CLOSURES ARE ALLOWED WEEKDAYS BETWEEN 9:00 A.M. AND 3:00 P.M. AND BETWEEN 7:00 P.M. AND 5:00 A.M. OR AS APPROVED BY THE EXPRESSWAY TRAFFIC OPERATIONS ENGINEER. PERMANENT SHOULDER AND PARTIAL RAMP CLOSURES WILL ONLY BE PERMITTED IF CALLED FOR IN THE PLANS OR AS APPROVED BY THE EXPRESSWAY OPERATIONS ENGINEER.

ALL DIMENSIONS ARE IN INCHES (MILLIMETERS) UNLESS OTHERWISE SHOWN.

MODEL: Default
FILE NAME: pw:\\illinois-pw.bentley.com:PWIDOT\Documents\DOT Offices\District 1\Projects\Circle Interchange\Design\Dist5x.dgn

USER NAME = naveed.hassan	DESIGNED -	REVISED -	S.P.B. 12-09
	DRAWN - D.W.S.	REVISED -	M.D. 06-13
PLOT SCALE = 99.8585 ' / in.	CHECKED -	REVISED -	M.D. 01-18
PLOT DATE = 12/20/2022	DATE - 11-96	REVISED -	M.D. 10-20

STATE OF ILLINOIS
DEPARTMENT OF TRANSPORTATION

TRAFFIC CONTROL DETAILS FOR FREEWAY SHOULDER CLOSURES AND PARTIAL RAMP CLOSURES

SCALE: NONE | SHEET 1 OF 1 SHEETS | STA. TO STA.

VAR. RTE.	SECTION	COUNTY	TOTAL SHEETS	SHEET NO.
VAR.	FAI VARIOUS BRIDGE SEALING	COOK	75	75
	TC-17	CONTRACT NO. 62U35		
		ILLINOIS FED. AID PROJECT		