FOR INFORMATION ONLY

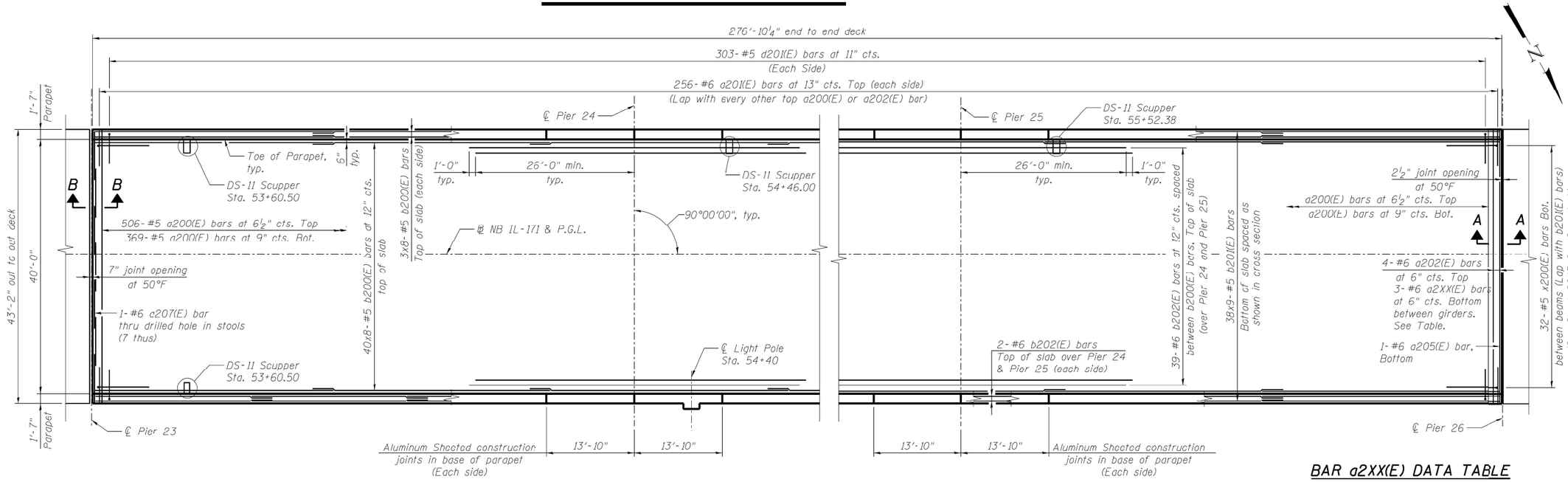

PLAN - SPANS 1 THRU 3

BAR a2XX(E) DATA TABLE

Span	Pier	Bay	Bar	Size
3	26	B1-B5	a203(E)	#6
3	26	B5-B6	a204(E)	#6

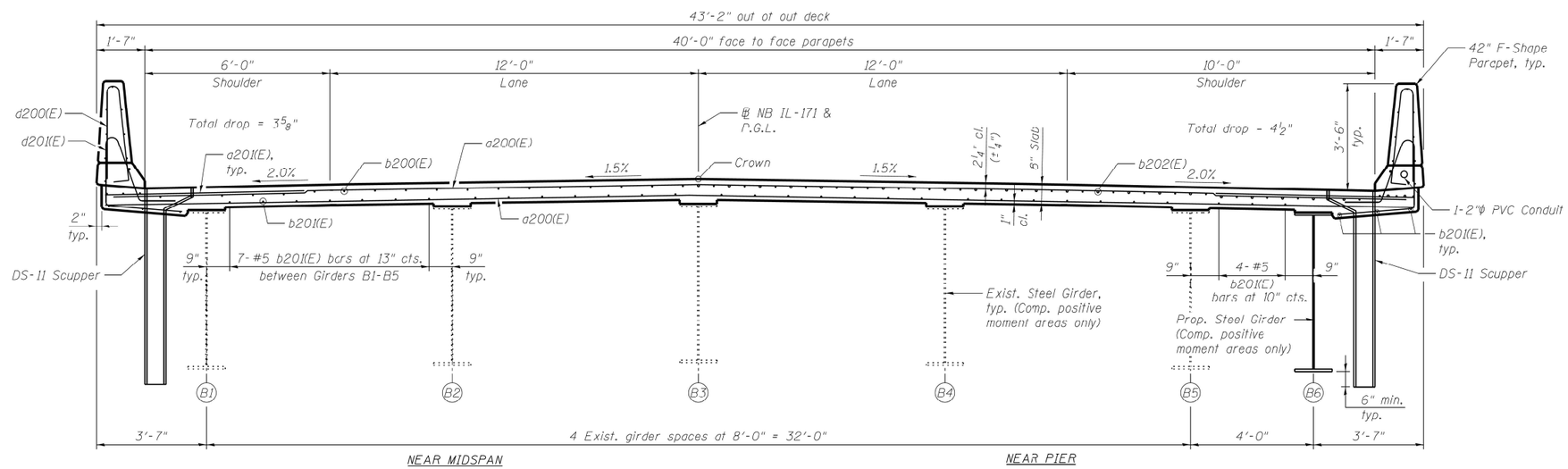

DECK CROSS SECTION - SPANS 1 THRU 3

(Looking Upstation, North)

MINIMUM BAR LAP

(Slab)
#5 bar = 3'-3"
#6 bar - 3'-10"

NOTES:

1. For Superstructure Details, Section A A, and Bar Bends, see Sheet SC45.
2. For Section B-B, see Sheet SC50.
3. For Bill of Material, see Sheet SC46.
4. Bars indicated thus 40x7-#5 etc. indicates 40 lines of bars with 7 lengths per line.
5. Dimensions are based on a Rolled Rail Strip Seal Joint at Pier 26. If the Contractor elects to use the Welded Rail Strip Seal Joint, deck dimensions may require adjustments to satisfy the details on Sheet SC49.

MODEL: Default
FILE NAME: pw:\\ildot-pw.bentley.com:PWIDOT\Documents\IDOT Offices\District 1\Projects\D104323\CADData\Design\D104323-sht-dgn.dgn

USER NAME = Ivan.Diaz	DESIGNED -	REVISED -	
	DRAWN -	REVISED -	
PLOT SCALE = 100.0000 ' / in.	CHECKED -	REVISED -	
PLOT DATE = 12/13/2022	DATE -	REVISED -	

STATE OF ILLINOIS
DEPARTMENT OF TRANSPORTATION

EXISTING DECK PLAN & CROSS SECTION (UNIT B)
SN: 016-2456

SCALE: | SHEET OF SHEETS | STA. TO STA.

FAP RTE.	SECTION	COUNTY	TOTAL SHEETS	SHEET NO.
372	FAP 372 22 VARIOUS BS	COOK	138	101

CONTRACT NO. 62U38

ILLINOIS | FED. AID PROJECT

FOR INFORMATION ONLY

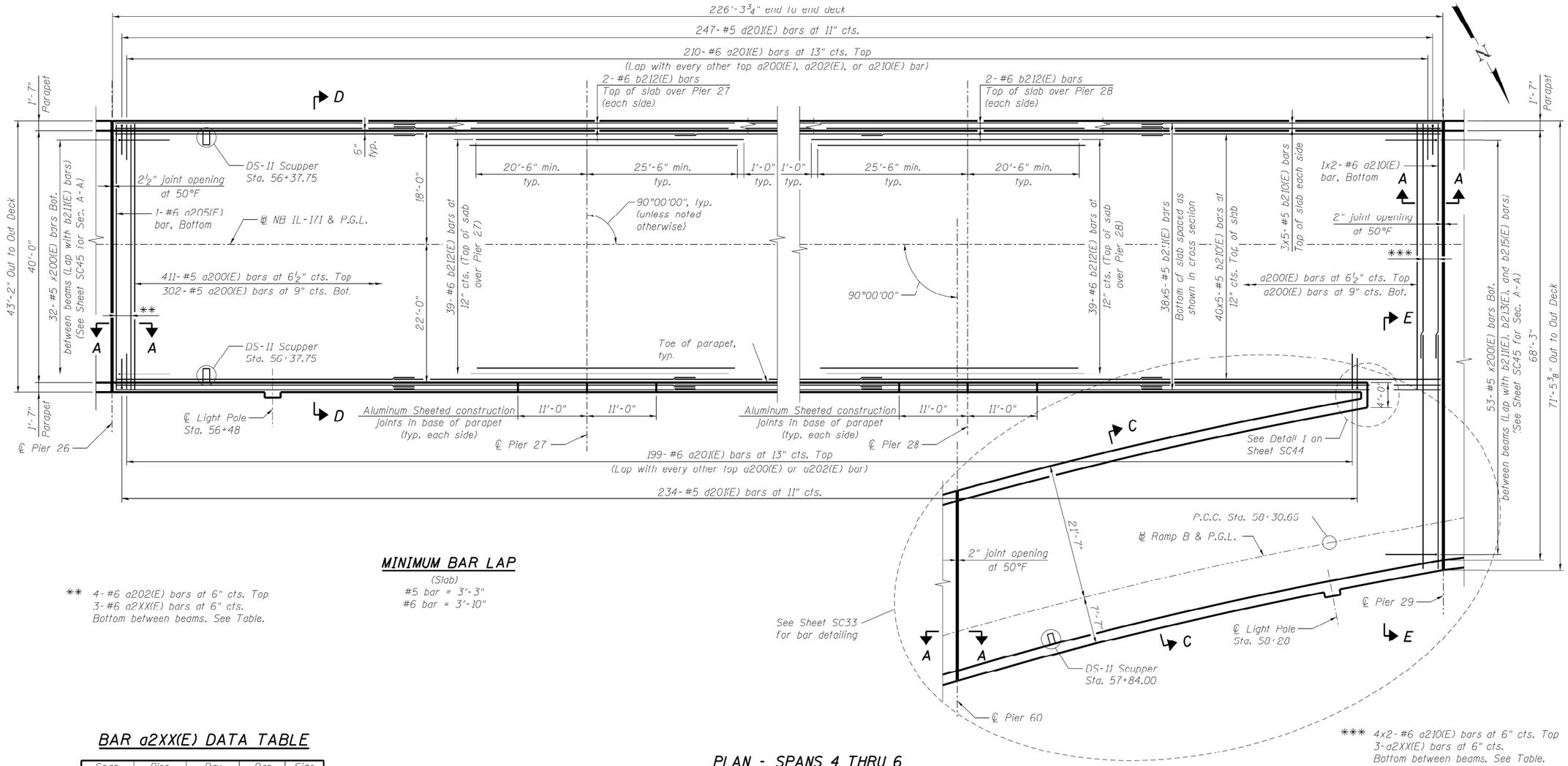

MINIMUM BAR LAP

(Slab)
#5 bar = 3'-3"
#6 bar = 3'-10"

** 4-#6 a202(E) bars at 6" cts. Top
3-#6 a2XX(E) bars at 6" cts.
Bottom between beams. See Table.

*** 4x2-#6 a210(E) bars at 6" cts. Top
3-a2XX(E) bars at 6" cts.
Bottom between beams. See Table.

PLAN - SPANS 4 THRU 6

BAR a2XX(E) DATA TABLE

Span	Pier	Bay	Bar	Size
4	26	D1-D5	a203(E)	#6
4	26	D5-D6	a204(E)	#6
6	29	D1-D5	a203(E)	#6
6	29	D5-D6	a204(E)	#6
6	29	D6-R1	a211(E)	#5
6	29	R1-R4	a212(E)	#5
6	29	R4-R5	a213(E)	#5

NOTES:

1. For Superstructure Details, Section A-A, and Bar Bends, see Sheet SC45.
2. For Sections C-C, D-D, and E-E, see Sheet SC34.
2. For Bill of Material, see Sheet SC46.
3. Bars indicated thus 20x3-#5 etc. indicates 20 lines of bars with 3 lengths per line.
4. Barrier widths are measured perpendicular from the edge of deck. Overhang widths are measured perpendicular from the fascia girders. Girder spacings are measured perpendicular from the east girder to the west girder at the centerline of bearing. All remaining deck dimensions are measured perpendicular to the baseline shown unless noted otherwise.
5. Dimensions are based on a Rolled Rail Strip Seal Joint. If the Contractor elects to use the Welded Rail Strip Seal Joint, deck dimensions may require adjustments to satisfy the details on Sheet SC49.

MODEL: Default
FILE NAME: pw:\\ildot-pw.bentley.com:PWIDOT\Documents\IDOT Offices\District 1\Projects\D104323\CADData\Design\D104323-ch-plan.dgn

USER NAME = Ivan.Diaz	DESIGNED -	REVISED -	STATE OF ILLINOIS DEPARTMENT OF TRANSPORTATION
	DRAWN -	REVISED -	
PLOT SCALE = 100.0000 ' / in.	CHECKED -	REVISED -	
PLOT DATE = 12/13/2022	DATE -	REVISED -	

EXISTING DECK PLAN UNIT D SPANS 4 THRU 6 (1 OF 2)
SN: 016-2456

SCALE: | SHEET OF SHEETS | STA. TO STA.

FAP RTE.	SECTION	COUNTY	TOTAL SHEETS	SHEET NO.
372	FAP 372 22 VARIOUS BS	COOK	138	102

CONTRACT NO. 62U38
ILLINOIS | FED. AID PROJECT

FOR INFORMATION ONLY

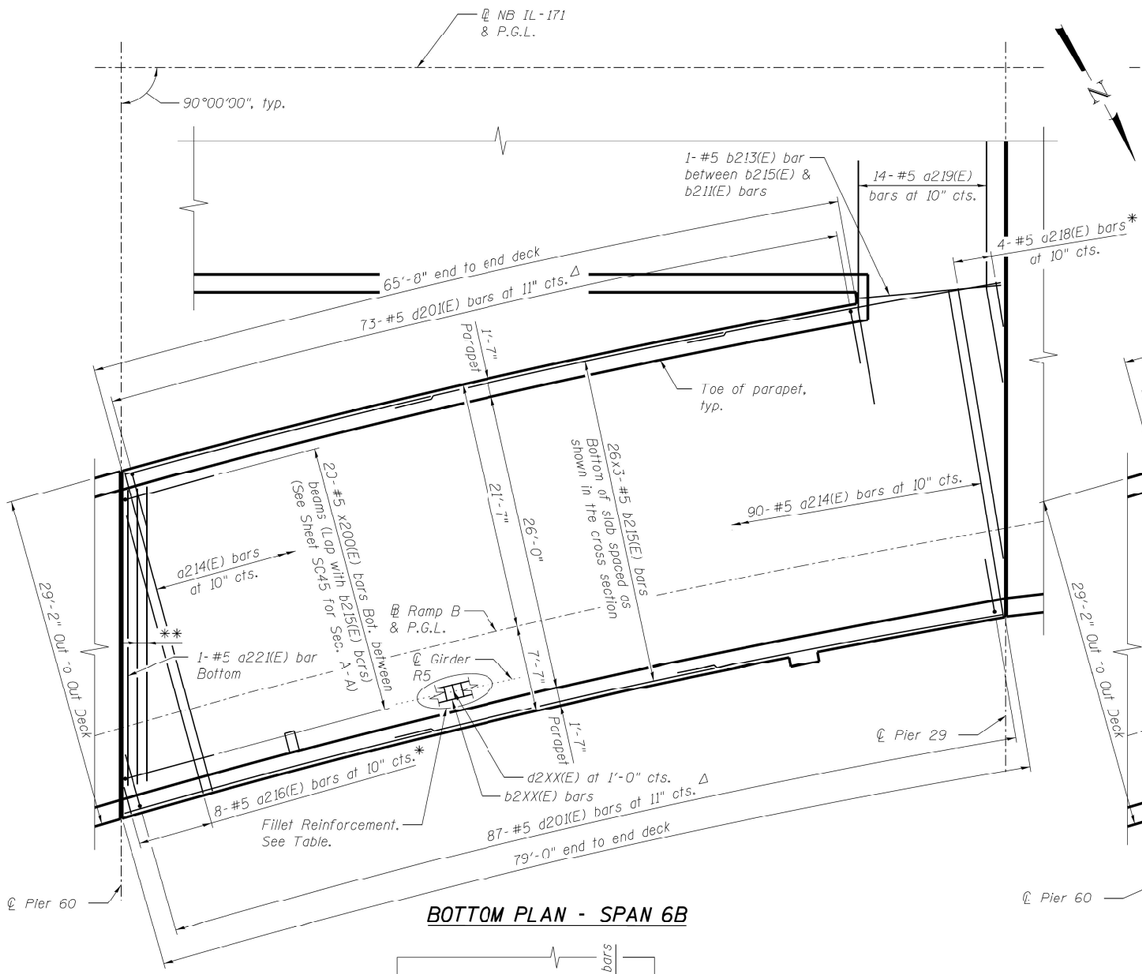

BOTTOM PLAN - SPAN 6B

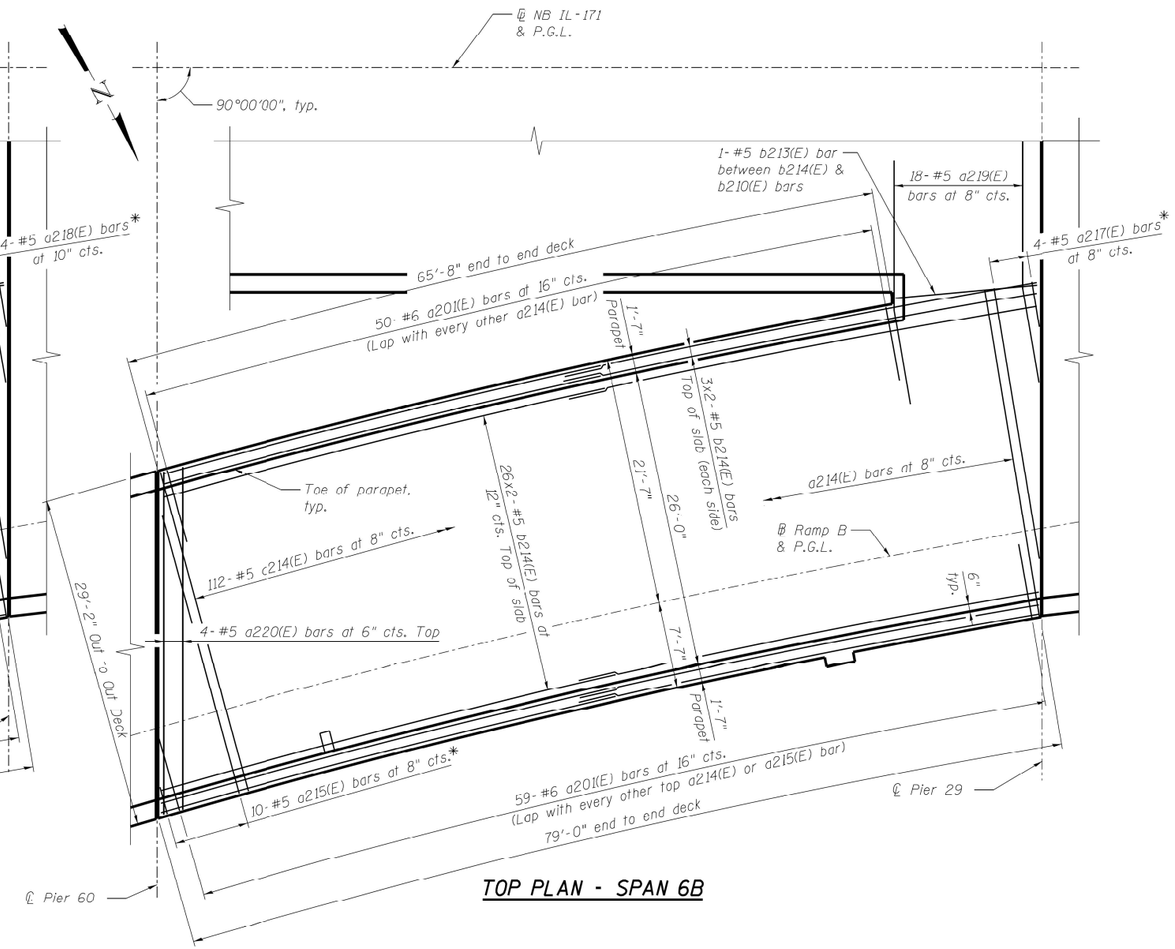

TOP PLAN - SPAN 6B

Δ Cut to fit in field.

* Order bars full length. Cut to fit skew and use remainder of bars in opposite side. See cut diagram on Sheet SC45.

** 3-#5 a2XX(E) bars at 6" cts. Bottom between beams. See Table.

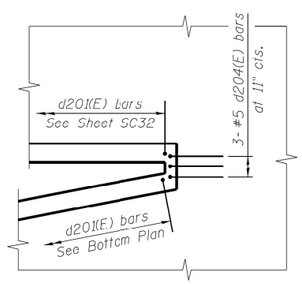

GORE PLAN

FILLET REINFORCEMENT DATA TABLE

Girder	Start Sta.	End Sta.	b2XX(E) bars	d2XX(E) bars
R5	58+02	58+38	2-#4 b245(E)	36-#4 d208(E)

For Fillet Reinforcement detail, see Sheet SC45.
(Stations measured along ℄ Ramp B)

BAR a2XX(E) DATA TABLE

Span	Pier	Bay	Bar	Size
6B	60	R1-R4	a222(E)	#5
6B	60	R4-R5	a223(E)	#5

MINIMUM BAR LAP

(Slab)
#5 bar = 3'-3"
#6 bar = 3'-10"

NOTES:

1. For Superstructure Details and Bar Bends, see Sheet SC45.
2. For Bill of Material, see Sheet SC46.
3. Bars indicated thus 20x3-#5 etc. indicates 20 lines of bars with 3 lengths per line.
4. Dimensions are based on a Rolled Rail Strip Seal Joint. If the Contractor elects to use the Welded Rail Strip Seal Joint, deck dimensions may require adjustments to satisfy the details on Sheet SC49.
5. Ramp B Span 6B reinforcement included in Unit D Spans 4-6 Bill of Material.

MODEL: Default
FILE NAME: pw:\\ildot-pw.bentley.com:PWIDOT\Documents\IDOT Offices\District 1\Projects\D104323\CADData\Design\D104323-sht-dgn.dgn

USER NAME = Ivan.Diaz	DESIGNED -	REVISED -	STATE OF ILLINOIS DEPARTMENT OF TRANSPORTATION
	DRAWN -	REVISED -	
PLOT SCALE = 100.0000 ' / in.	CHECKED -	REVISED -	
PLOT DATE = 12/13/2022	DATE -	REVISED -	

EXISTING DECK PLAN UNIT D SPANS 4 THRU 6 (2 OF 2)
SN: 016-2456

SCALE: SHEET OF SHEETS STA. TO STA.

FAP RTE.	SECTION	COUNTY	TOTAL SHEETS	SHEET NO.
372	FAP 372 22 VARIOUS BS	COOK	138	103
		CONTRACT NO. 62U38		
		ILLINOIS FED. AID PROJECT		

FOR INFORMATION ONLY

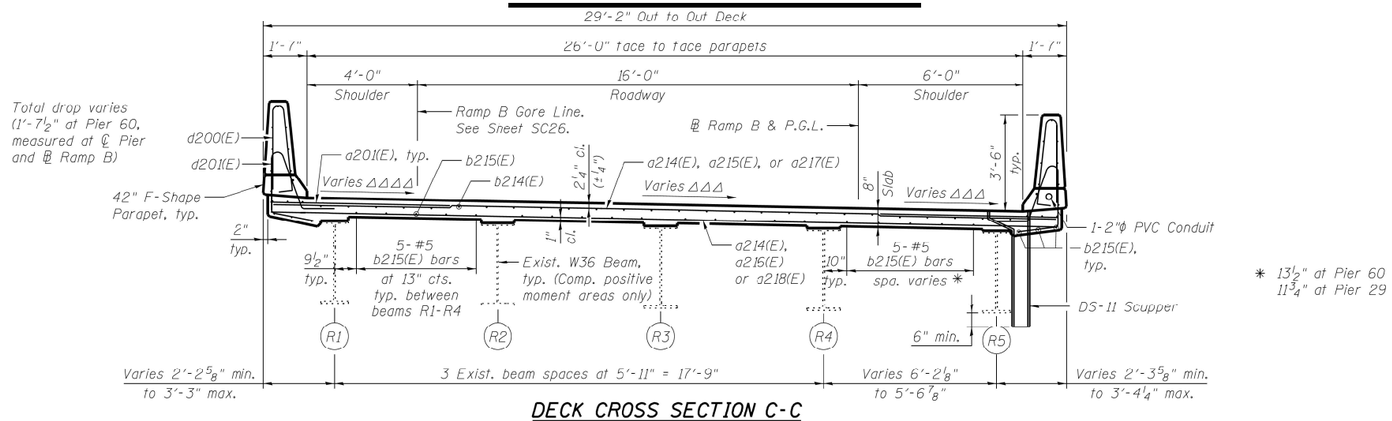

✱ 13½" at Pier 60
11¾" at Pier 29

DECK CROSS SECTION C-C

(Looking Upstation, North)

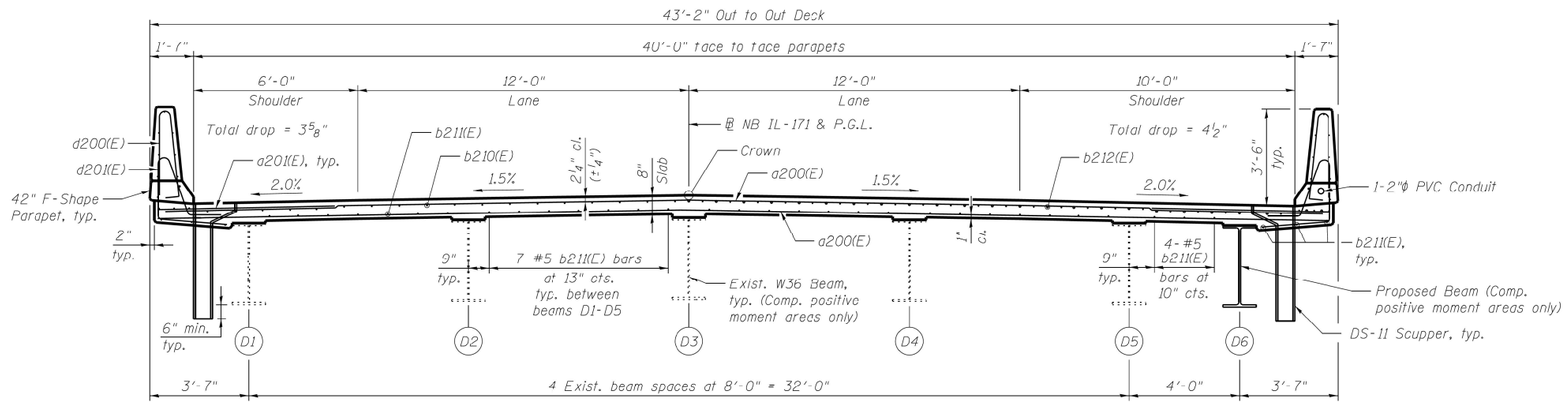

DECK CROSS SECTION D-D

(Looking Upstation, North)

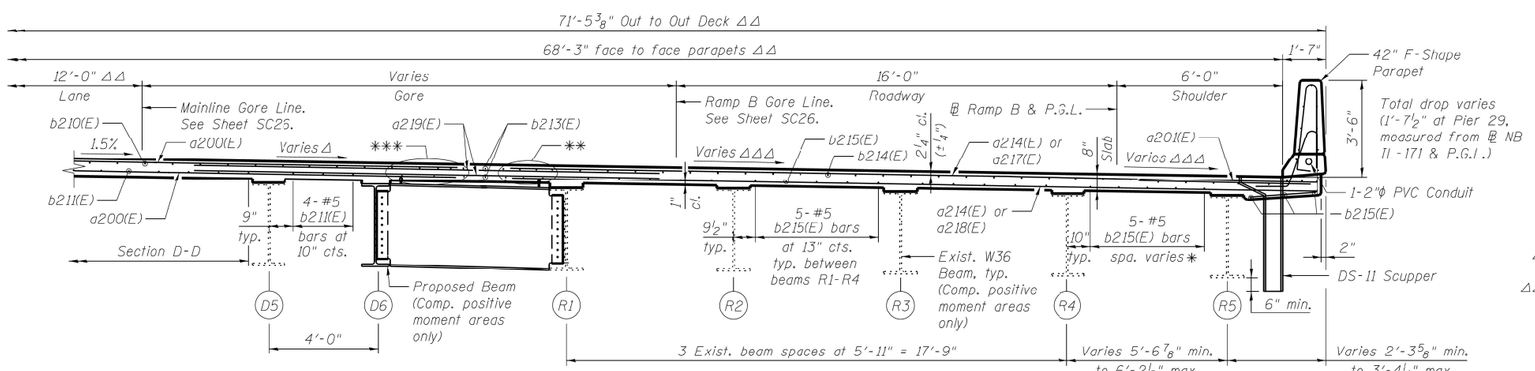

DECK CROSS SECTION E-E

(Looking Upstation, North)

MINIMUM LAP

(Slab)
#5 bar = 3'-3"
#6 bar = 3'-10"

NOTES:

1. For Superstructure Details and Bar Bends, see Sheet SC45.
2. For Bill of Material, see Sheet SC46.
3. Barrier widths are measured perpendicular from the edge of deck. Overhang widths are measured perpendicular from the fascia girders. Girder spacings are measured perpendicular from the east girder to the west girder at the centerline of bearing. All remaining deck dimensions are measured perpendicular to the baseline shown unless noted otherwise.

Δ Cross slope varies in gore from Mainline Sta. 58+37.22 to Sta. 59+75.22. See Sheet SC26.

ΔΔ Measured perpendicular to ℄ NB IL-171.

ΔΔΔ See S.E. Data on Sheet SC38.

ΔΔΔΔ Linear slope transition from 6.5% at Ramp B Sta. 57+35.00 to 1.81% at Sta. 58+39.75. See Sheet SC26.

✱✱ Extend b214(E) and b215(E) bars in overhang of Ramp B beyond parapet to end of deck.

✱✱✱ Extend b210(E) and b211(E) bars in overhang of Mainline beyond parapet to end of deck.

MODEL: Default
FILE NAME: pw:\\ildot-pw.bentley.com:PWIDOT\Documents\IDOT Offices\District 1\Projects\D104323\CADData\Design\D104323-sht-c-dgn.dgn

USER NAME = Ivan.Diaz	DESIGNED -	REVISED -	
	DRAWN -	REVISED -	
PLOT SCALE = 100.0000 ' / in.	CHECKED -	REVISED -	
PLOT DATE = 12/13/2022	DATE -	REVISED -	

STATE OF ILLINOIS
DEPARTMENT OF TRANSPORTATION

EXISTING DECK CROSS SECTION UNIT D SPANS 4 THRU 6
SN: 016-2456

SCALE: | SHEET OF SHEETS | STA. TO STA.

FAP RTE.	SECTION	COUNTY	TOTAL SHEETS	SHEET NO.
372	FAP 372 22 VARIOUS BS	COOK	138	104
		CONTRACT NO. 62U38		
		ILLINOIS	FED. AID PROJECT	

FOR INFORMATION ONLY

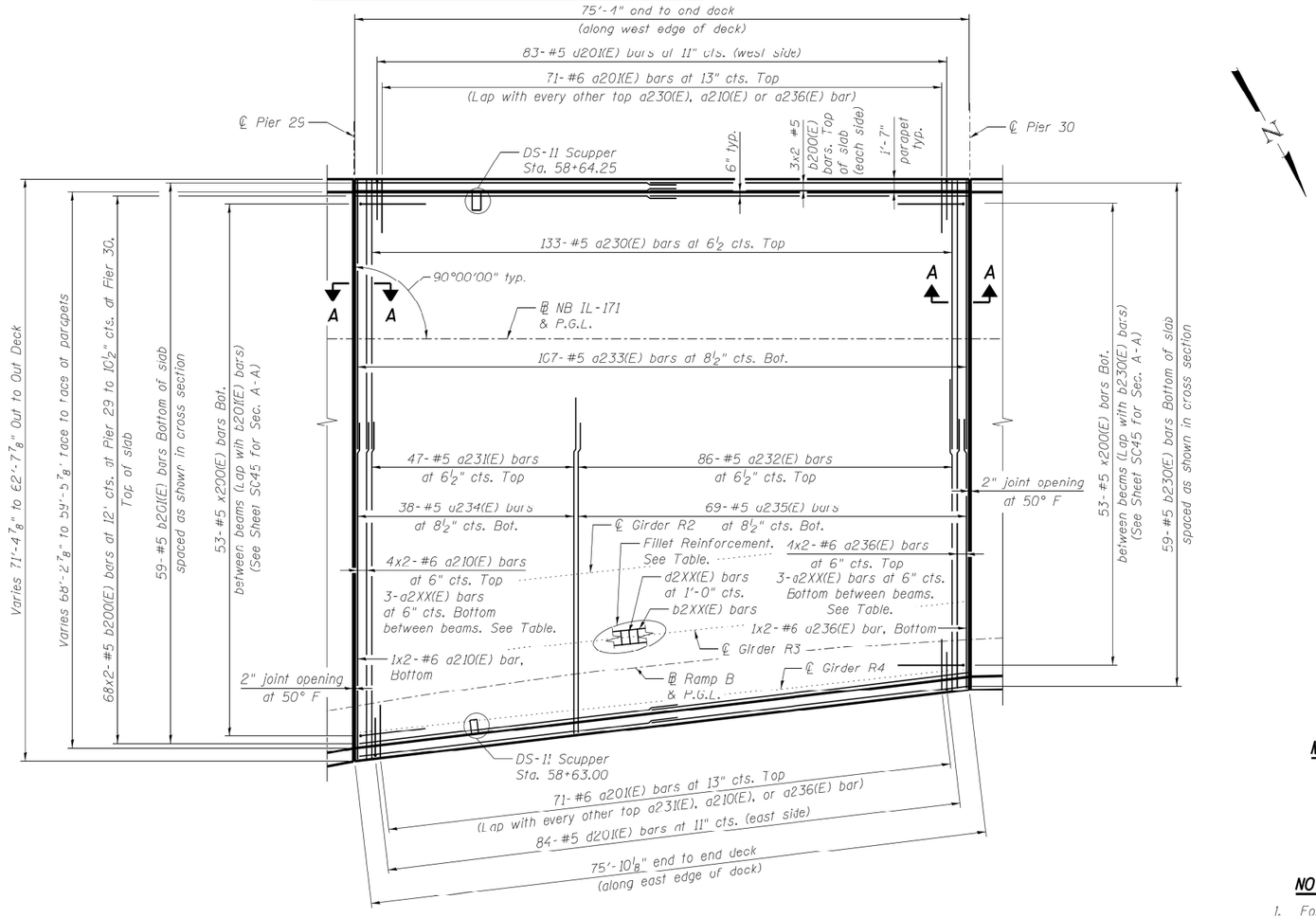

PLAN - SPAN 7

MINIMUM BAR LAP

(Slab)
#4 bar = 2'-7"
#5 bar = 3'-3"
#6 bar = 3'-10"

NOTES:

1. For Superstructure Details, Section A-A, and Bar Bends, see Sheet SC45.
2. For Bill of Material, see Sheet SC45.
3. Bars indicated thus 20x3-#5 etc. indicates 20 lines of bars with 3 lengths per line.
4. Barrier widths are measured perpendicular from the edge of deck. Overhang widths are measured perpendicular from the fascia girders. Girder spacings are measured perpendicular from the east girder to the west girder at the centerline of bearing. All remaining deck dimensions are measured perpendicular to the baseline shown unless noted otherwise.
5. Dimensions are based on a Rolled Rail Strip Seal Joint. If the Contractor elects to use the Welded Rail Strip Seal Joint, deck dimensions may require adjustments to satisfy the details on Sheet SC49.

BAR a2XX(E) DATA TABLE

Span	Pier	Bay	Bar	Size
7	29	D1-D6	a237(E)	#5
7	29	D6-R1	a238(E)	#6
7	29	R1-R4	a238(E)	#6
7	30	D1-D6	a237(E)	#5
7	30	D6-R1	a239(E)	#5
7	30	R1-R2	a239(E)	#5
7	30	R2-R4	a238(E)	#6

FILLET REINFORCEMENT DATA TABLE

Girder	Start Sta.	End Sta.	b2XX(E) bars	d2XX(E) bars
R2	58+70	59+06	2-#4 b245(E)	36-#4 d208(E)
R3	58+53	59+23	2x2-#4 b245(E)	70-#4 d208(E)
R4	58+01	58+37	2-#4 b245(E)	36-#4 d208(E)

For Fillet Reinforcement detail, see Sheet SC45.
(Stations measured along ℄ Ramp B)

MODEL: Default
FILE NAME: pw:\\ildot-pw.bentley.com:PWIDOT\Documents\IDOT Offices\District 1\Projects\D104323\CADData\Design\D104323-sht-plan.dgn

USER NAME = Ivan.Diaz	DESIGNED -	REVISED -	
	DRAWN -	REVISED -	
PLOT SCALE = 100.0000 ' / in.	CHECKED -	REVISED -	
PLOT DATE = 12/13/2022	DATE -	REVISED -	

STATE OF ILLINOIS
DEPARTMENT OF TRANSPORTATION

EXISTING DECK PLAN UNIT D SPAN 7
SN: 016-2456

SCALE: | SHEET OF SHEETS | STA. TO STA.

FAP RTE.	SECTION	COUNTY	TOTAL SHEETS	SHEET NO.
372	FAP 372 22 VARIOUS BS	COOK	138	105

CONTRACT NO. 62U38
ILLINOIS | FED. AID PROJECT

FOR INFORMATION ONLY

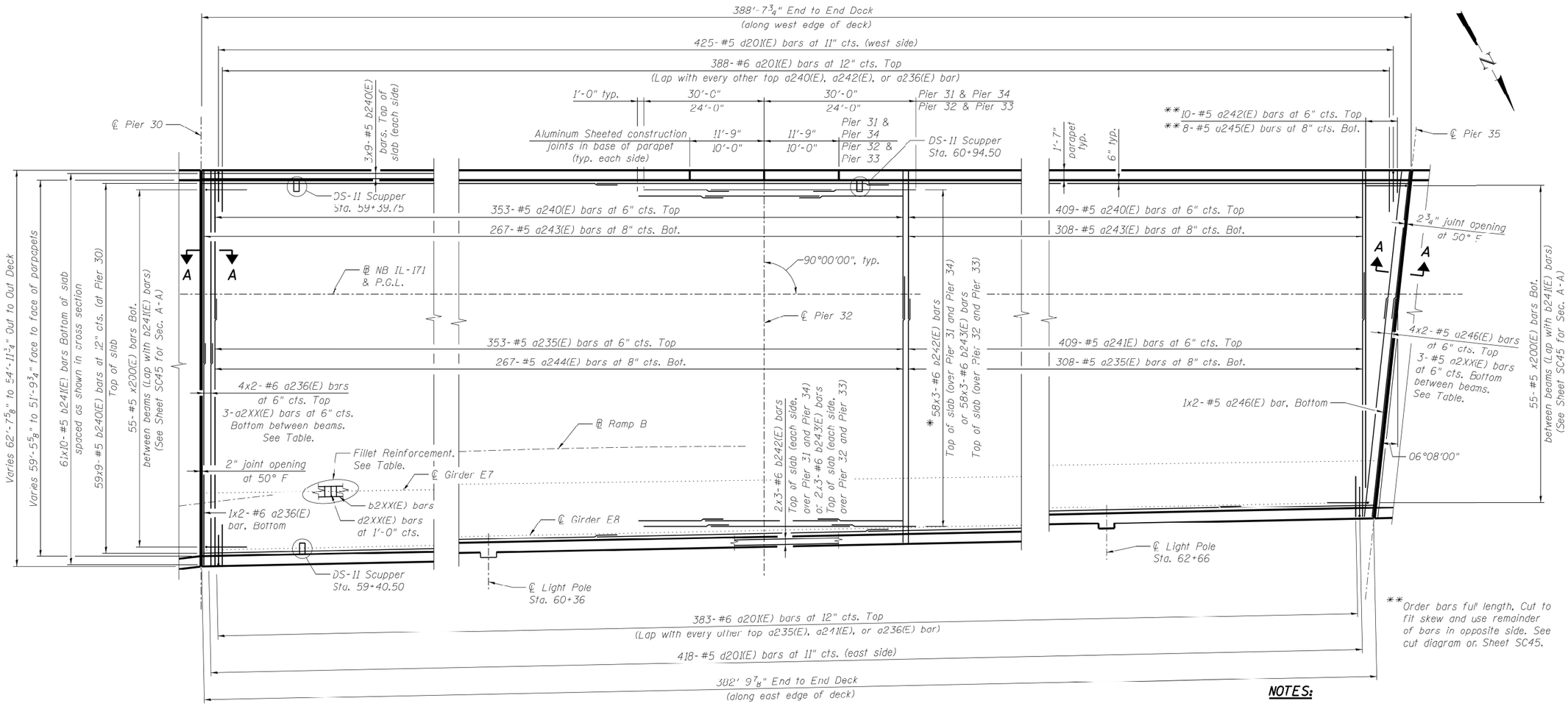

**Order bars full length. Cut to fit skew and use remainder of bars in opposite side. See cut diagram on Sheet SC45.

PLAN - SPANS 8 THRU 12

* Pier 31 at 11 3/4" cts.
Pier 32 at 11 1/2" cts.
Pier 33 at 11" cts.
Pier 34 at 10 3/4" cts.

NOTES:

1. For Superstructure Details, Section A-A, and Bar Bends, see Sheet SC45.
2. For Bill of Material, see Sheet SC46.
3. Bars indicated thus 20x3 #5 etc. indicates 20 lines of bars with 3 lengths per line.
4. Barrier widths are measured perpendicular from the edge of deck. Overhang widths are measured perpendicular from the fascia girders. Girder spacings are measured perpendicular from the east girder to the west girder at the centerline of bearing. All remaining deck dimensions are measured perpendicular to the baseline shown unless noted otherwise.
5. Dimensions are based on a Rolled Rail Strip Seal Joint. If the Contractor elects to use the Welded Rail Strip Seal Joint, deck dimensions may require adjustments to satisfy the details on Sheet SC49.
6. See Sheet SC45 for Optional Deck Pour Sequence.

BAR a2XX(E) DATA TABLE

Span	Pier	Bay	Bar	Size
8	30	E1-E5	a247(E)	#5
8	30	E5-E8	a248(E)	#6
12	35	E1-E5	a247(E)	#5
12	35	E5-E8	a249(E)	#5

FILLET REINFORCEMENT DATA TABLE

Girder	Start Sta.	End Sta.	b2XX(E) bars	d2XX(E) bars
E7	59+36	59+95	2x2-#4 b244(E)	59-#4 d208(E)
E8	59+25	59+95	2x2-#4 b245(E)	70-#4 d208(E)

For Fillet Reinforcement detail, see Sheet SC45.
(Stations measured along ℄ Ramp B)

MINIMUM BAR LAP

(Slab)
#4 bar = 2'-7"
#5 bar = 3'-3"
#6 bar = 3'-10"

MODEL: Default
FILE NAME: pw:\\illiot-pw.bentley.com:PWIDOT\Documents\IDOT Offices\District 1\Projects\D104323\CADData\Design\D104323-sht-plan.dgn

USER NAME = Ivan.Diaz	DESIGNED -	REVISED -	
	DRAWN -	REVISED -	
PLOT SCALE = 100.0000 ' / in.	CHECKED -	REVISED -	
PLOT DATE = 12/13/2022	DATE -	REVISED -	

STATE OF ILLINOIS
DEPARTMENT OF TRANSPORTATION

EXISTING DECK PLAN UNIT E
SN: 016-2456

SCALE: | SHEET OF SHEETS | STA. TO STA.

FAP RTE.	SECTION	COUNTY	TOTAL SHEETS	SHEET NO.
372	FAP 372 22 VARIOUS BS	COOK	138	106
		CONTRACT NO. 62U38		
		ILLINOIS FED. AID PROJECT		

FOR INFORMATION ONLY

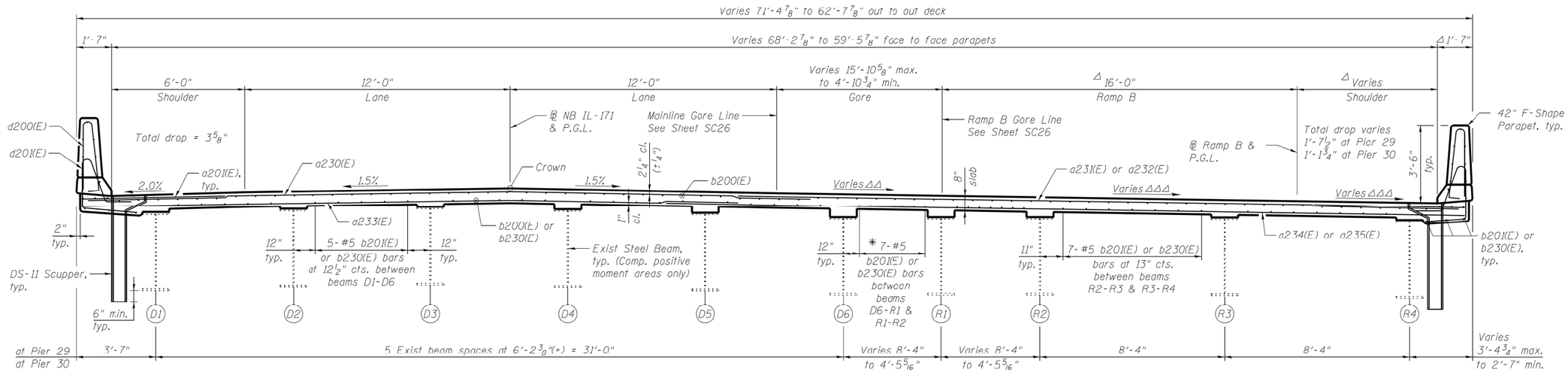

DECK CROSS SECTION - SPAN 7

(Looking Upstation, North)

* Spacing 12 1/2" at Pier 29 and 5" at Pier 30

Δ Measured perpendicular to ℄ Ramp B.

ΔΔ Cross slope varies in gore from Sta. 58+37.22 to Sta. 59+75.22.

ΔΔΔ See S.E. Data on Sheet SC38.

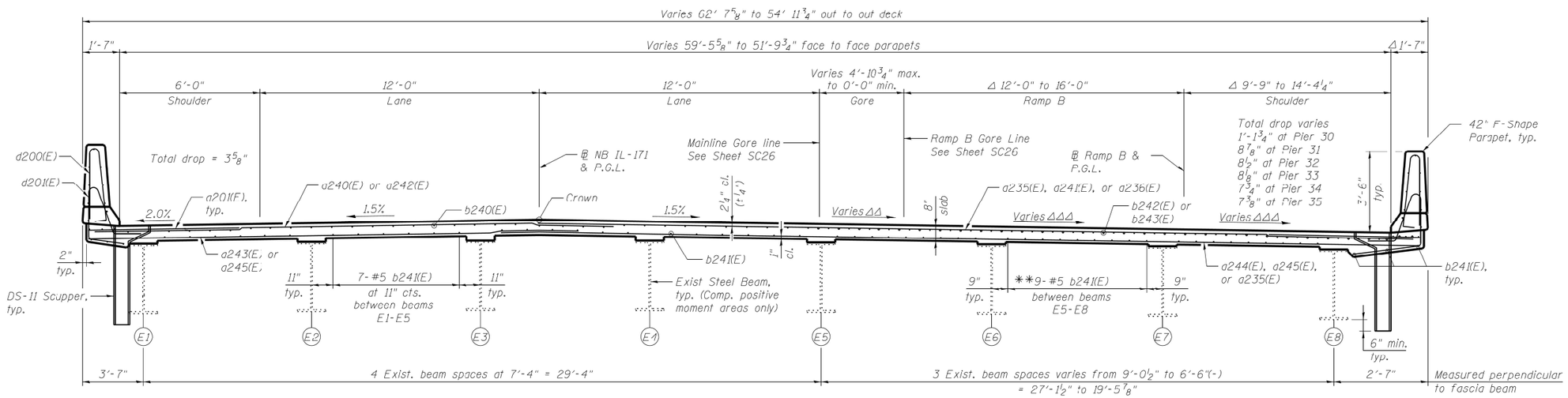

NEAR MIDSPAN

NEAR PIER

DECK CROSS SECTION - SPANS 8 THRU 12

(Looking Upstation, North)

** Spacing
11 1/2" at Pier 30
10 3/4" at Pier 31
10" at Pier 32
9 3/16" at Pior 33
8 1/2" at Pier 34
7 5/8" at Pier 35

NOTES:

1. For Superstructure Details and Bar Bends, see Sheet SC45.
2. For Bill of Material, see Sheet SC46.
3. Barrier widths are measured perpendicular from the edge of deck. Overhang widths are measured perpendicular from the fascia girders. Girder spacings are measured perpendicular from the east girder to the west girder at the centerline of bearing. All remaining deck dimensions are measured perpendicular to the baseline shown unless noted otherwise.

MODEL: Default
FILE NAME: pw:\\ildot-pw.bentley.com:PWIDOT\Documents\IDOT Offices\District 1\Projects\D104323\CADData\Design\D104323-h-sBan.dgn

USER NAME = Ivan.Diaz	DESIGNED -	REVISED -	STATE OF ILLINOIS DEPARTMENT OF TRANSPORTATION
	DRAWN -	REVISED -	
PLOT SCALE = 100.0000 ' / in.	CHECKED -	REVISED -	
PLOT DATE = 12/13/2022	DATE -	REVISED -	

EXISTING DECK CROSS SECTION UNIT D SPAN 7 AND UNIT E
SN: 016-2456

SCALE: SHEET OF SHEETS STA. TO STA.

FAP RTE.	SECTION	COUNTY	TOTAL SHEETS	SHEET NO.
372	FAP 372 22 VARIOUS BS	COOK	138	107
		CONTRACT NO. 62U38		
	ILLINOIS	FED. AID PROJECT		

FOR INFORMATION ONLY

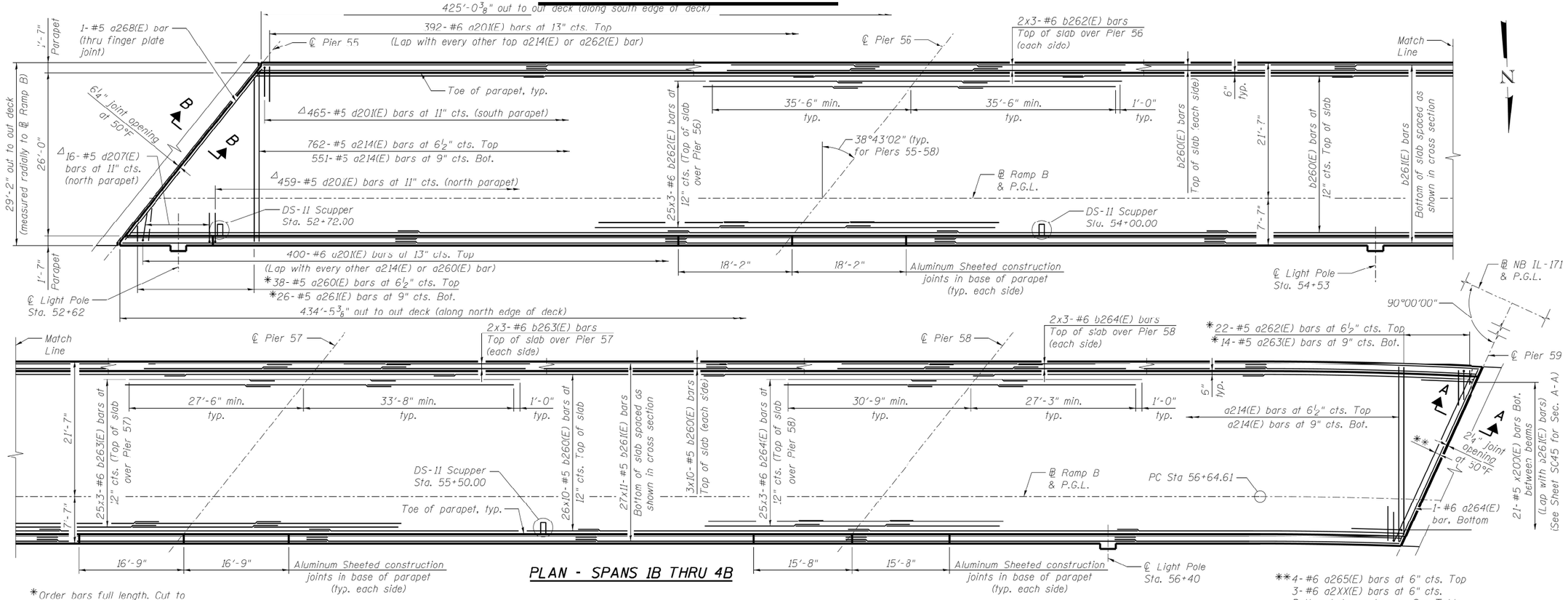

PLAN - SPANS 1B THRU 4B

*Order bars full length. Cut to fit skew and use remainder of bars in opposite side. See cut diagram on Sheet SC45.

△ Cut to fit in field

△△ 13" between Pier 55 & 58, 11 3/8" at Pier 59

△△△ See S.E. Data (this sheet)

**4-#6 a265(E) bars at 6" cts. Top
3-#6 a2XX(E) bars at 6" cts.
Bottom between beams. See Table.

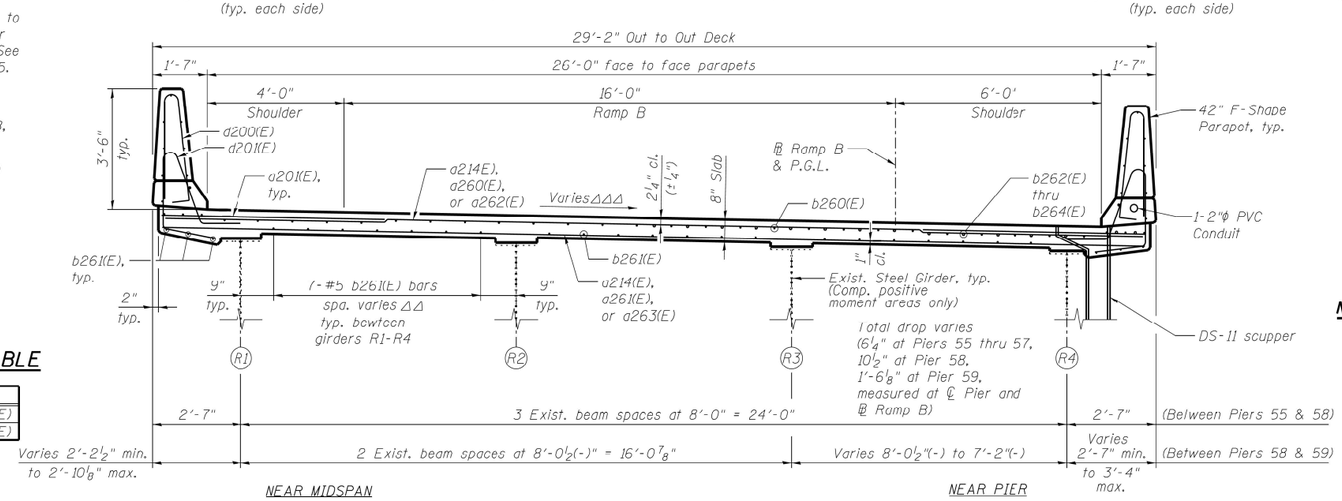

DECK CROSS SECTION - SPANS 1B THRU 4B

(Looking Upstation, North)

S.E. DATA - RAMP B

Normal Crown = Sta. 55+50.00
2.0% to 2.38% S.E. = Sta. 55+50.00 to Sta. 55+75.00
2.38% to 3.25% S.E. = Sta. 55+75.00 to Sta. 56+00.00
3.25% to 3.94% S.E. = Sta. 56+00.00 to Sta. 56+25.00
3.94% to 4.69% S.E. = Sta. 56+25.00 to Sta. 56+50.00
4.69% to 5.38% S.E. = Sta. 56+50.00 to Sta. 56+75.00
5.38% to 6.5% S.E. = Sta. 56+75.00 to Sta. 57+15.00
6.5% S.E. = Sta. 57+15.00 to Sta. 58+15.00
6.5% to 5.3% S.E. = Sta. 58+15.00 to Sta. 58+45.00
5.3% S.E. = Sta. 58+45.00 to Sta. 58+80.00
5.3% to 2.0% S.E. = Sta. 58+80.00 to Sta. 59+75.00
Normal Crown = Sta. 59+75.00

MINIMUM BAR LAP

(Slab)
#5 bar = 3'-3"
#6 bar = 3'-10"

BAR a2XX(E) DATA TABLE

Span	Pier	Bay	Bar
4B	59	R1-R3	a266(E)
4B	59	R3-R4	a267(E)

NOTES:

1. For Superstructure Details, Section A-A, and Bar Bends, see Sheet SC45.
2. For Section B-B, see Sheet SC50.
3. For Bill of Material, see Sheet SC46.
4. Bars indicated thus 20x3-#5 etc. indicates 20 lines of bars with 3 lengths per line.
5. Barrier widths are measured perpendicular from the edge of deck. Overhang widths are measured perpendicular from the fascia girders. Girder spacings are measured perpendicular from the east girder to the west girder at the centerline of bearing. All remaining deck dimensions are measured perpendicular to the baseline shown unless noted otherwise.
6. Dimensions are based on a Rolled Rail Strip Seal Joint. If the Contractor elects to use the Welded Rail Strip Seal Joint, deck dimensions may require adjustments to satisfy the details on Sheet SC49.

FOR INFORMATION ONLY

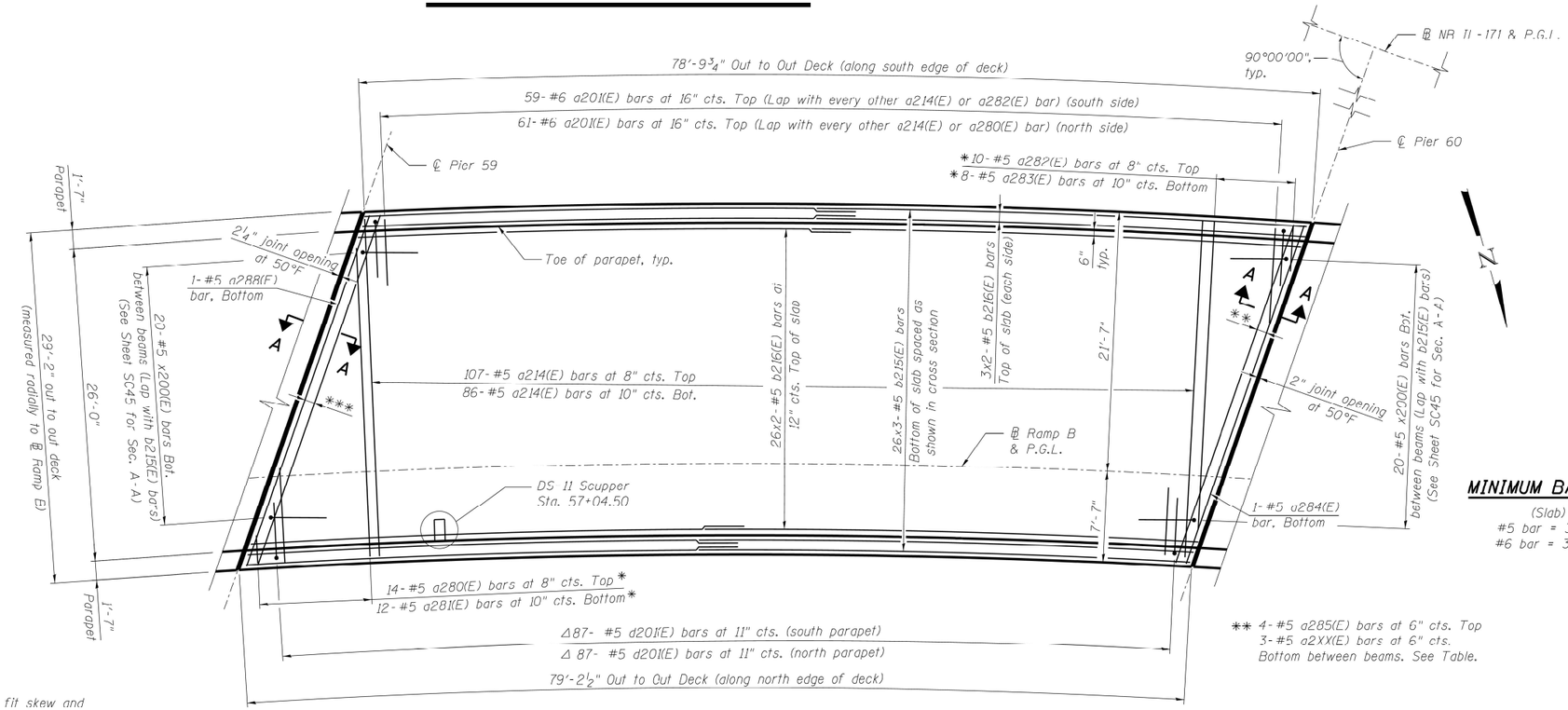

PLAN - SPAN 5B

Δ Cut to fit in field

* Order bars full length. Cut to fit skew and use remainder of bars in opposite side. See Cut Diagram on Sheet SC45.

*** 4-#5 a289(E) bars at 6" cts. Top
3-#5 a2XX(E) bars at 6" cts.
Bottom between beams. See table.

** 4-#5 a285(E) bars at 6" cts. Top
3-#5 a2XX(E) bars at 6" cts.
Bottom between beams. See Table.

MINIMUM BAR LAP

(Slab)
#5 bar = 3'-3"
#6 bar = 3'-10"

BAR a2XX(E) DATA TABLE

Pier	Bay	Bar
59	R1-R4	a286(E)
59	R4-R5	a290(E)
60	R1-R4	a286(E)
60	R4-R5	a287(E)

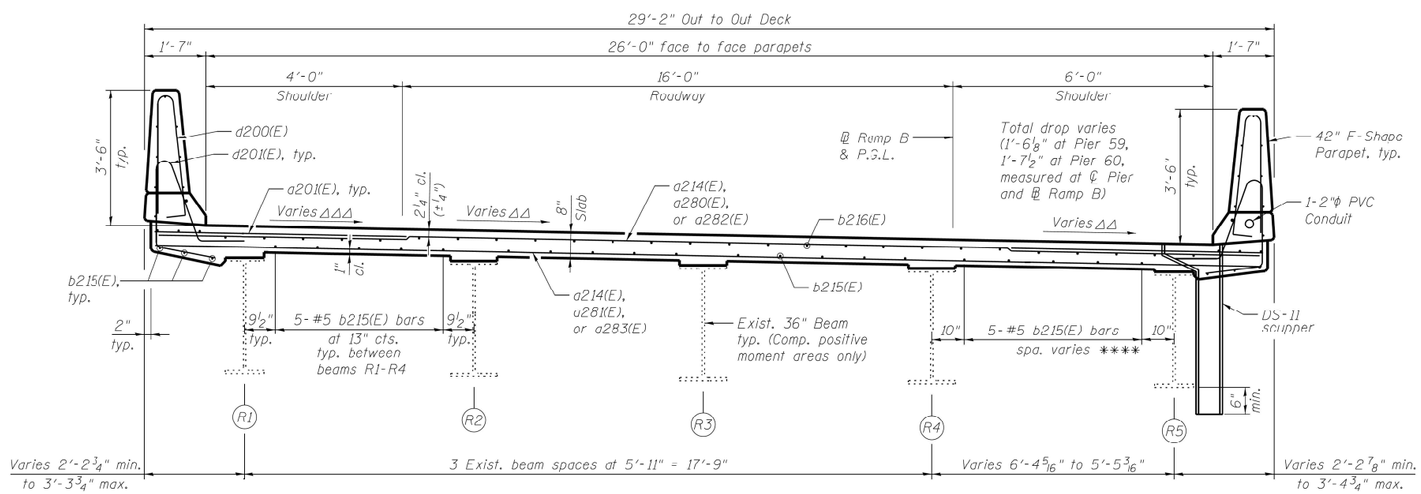

DECK CROSS SECTION - SPAN 5B

(Looking Upstation, North)

**** 14" at Pier 59
11¼" at Pier 60

NOTES:

1. For Superstructure Details, Section A-A, and Bar Bends, see Sheet SC45.
2. For Bill of Material, see Sheet SC46.
3. Bars indicated thus 20x3-#5 etc. indicates 20 lines of bars with 3 lengths per line.
4. Barrier widths are measured perpendicular from the edge of deck. Overhang widths are measured perpendicular from the fascia girders. Girder spacings are measured perpendicular from the east girder to the west girder at the centerline of bearing. All remaining deck dimensions are measured perpendicular to the baseline shown unless noted otherwise.
5. Dimensions are based on a Rolled Rail Strip Seal Joint. If the Contractor elects to use the Welded Rail Strip Seal Joint, deck dimensions may require adjustments to satisfy the details on Sheet SC49.

ΔΔ See S.E. Data on Sheet SC38.

ΔΔΔ Linear slope transition from 6.5% at Ramp B Sta. 57+35.00 to 1.81% at Sta. 58+39.75. See Sheet SC26.

MODEL: Default
FILE NAME: pw:\\ildot-pw.bentley.com:PWIDOT\Documents\IDOT Offices\District 1\Projects\D104323\CADData\Design\D104323-ifc-bin.dgn

USER NAME = Ivan.Diaz	DESIGNED -	REVISED -	STATE OF ILLINOIS DEPARTMENT OF TRANSPORTATION
	DRAWN -	REVISED -	
PLOT SCALE = 100.0000 ' / in.	CHECKED -	REVISED -	
PLOT DATE = 12/13/2022	DATE -	REVISED -	

EXISTING DECK PLAN & CROSS SECTION UNIT D RAMP B
SN: 016-2456

SCALE: | SHEET OF SHEETS | STA. TO STA.

FAP RTE.	SECTION	COUNTY	TOTAL SHEETS	SHEET NO.
372	FAP 372 22 VARIOUS BS	COOK	138	109
		CONTRACT NO. 62U38		
	ILLINOIS	FED. AID PROJECT		

FOR INFORMATION ONLY

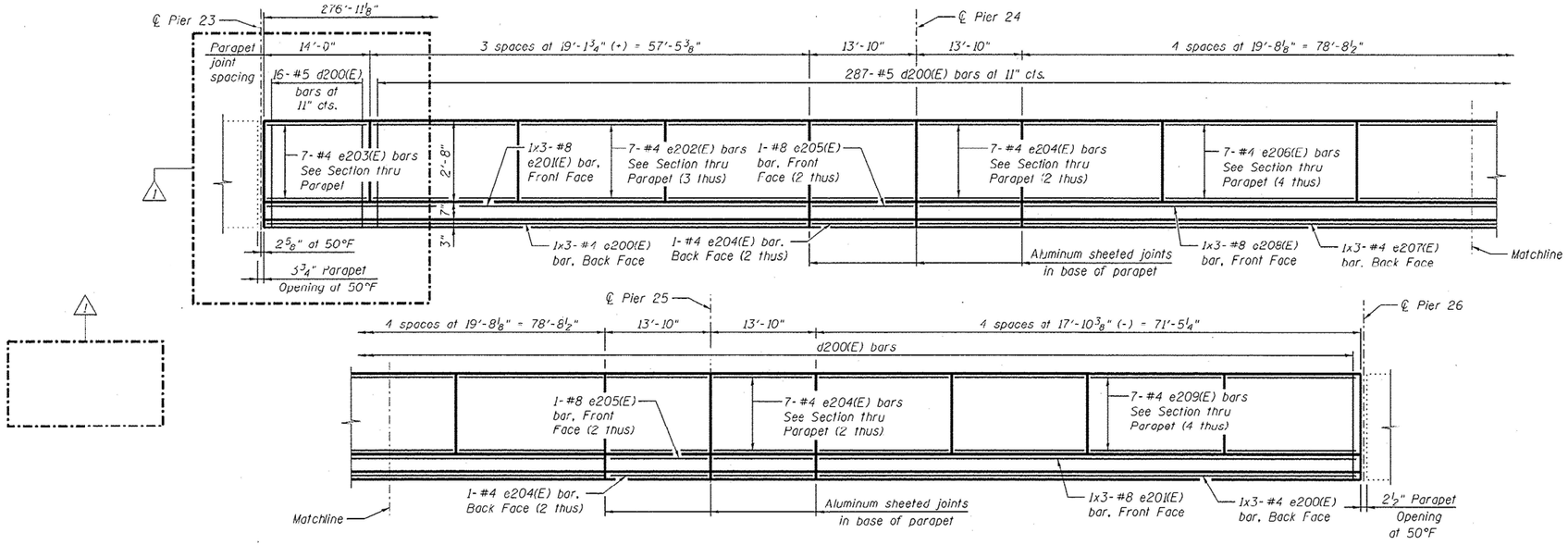

INSIDE ELEVATION OF NB IL-171 WEST PARAPET

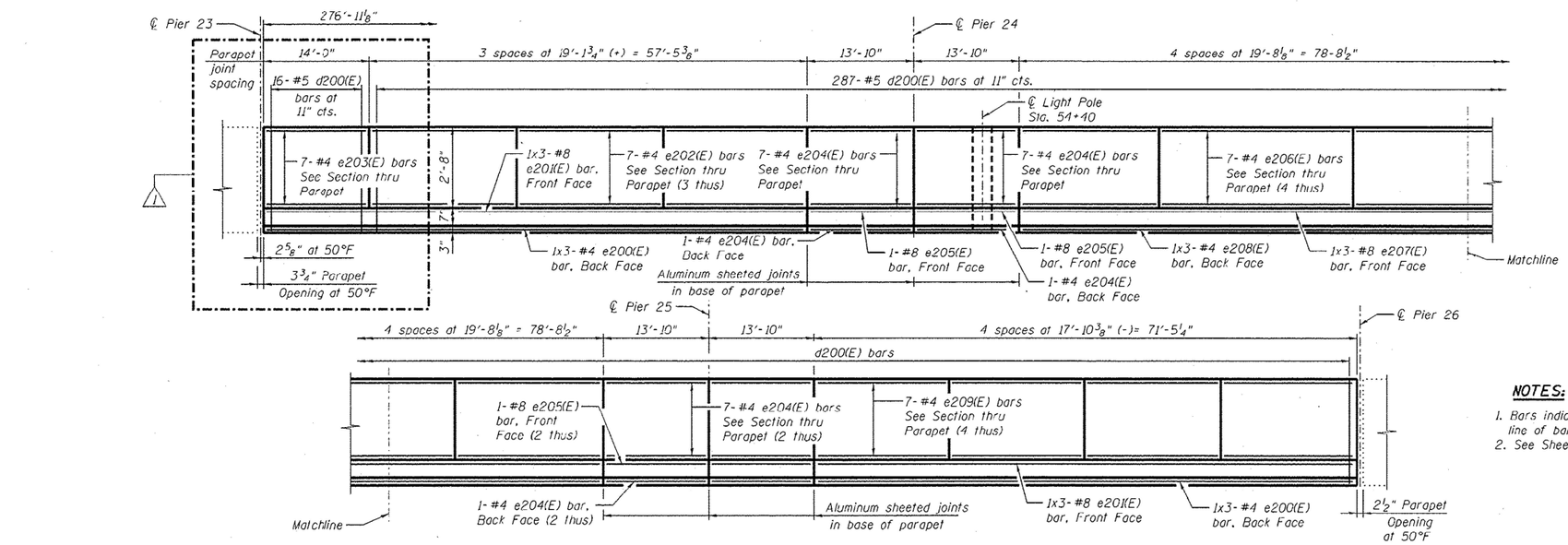

INSIDE ELEVATION OF NB IL-171 EAST PARAPET

(Reflected View Shown)

MINIMUM BAR LAP

(Parapet)
#4 bar = 2'-0"
#8 bar = 5'-2"

NOTES:

1. Bars indicated thus 1x3-#8 etc., indicates 1 line of bars with 3 lengths per line.
2. See Sheet SC44 for Section Thru Parapet.

MODEL: Default
FILE NAME: pw:\\ildot-pw.bentley.com:PWIDOT\Documents\IDOT Offices\District 1\Projects\D104323\CADData\Design\D104323-sht-4bn.dgn

USER NAME = Ivan.Diaz	DESIGNED -	REVISED -	STATE OF ILLINOIS DEPARTMENT OF TRANSPORTATION
	DRAWN -	REVISED -	
PLOT SCALE = 100.0000 ' / in.	CHECKED -	REVISED -	
PLOT DATE = 12/13/2022	DATE -	REVISED -	

EXISTING PARAPET ELEVATION UNIT B
SN: 016-2456

SCALE: SHEET OF SHEETS STA. TO STA.

FAP RTE.	SECTION	COUNTY	TOTAL SHEETS	SHEET NO.
372	FAP 372 22 VARIOUS BS	COOK	138	110
		CONTRACT NO. 62U38		
		ILLINOIS FED. AID PROJECT		

FOR INFORMATION ONLY

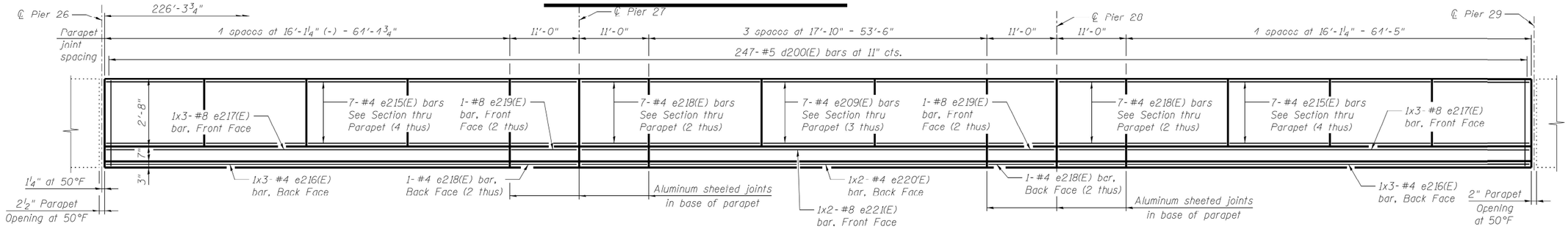

INSIDE ELEVATION OF NB IL-171 WEST PARAPET

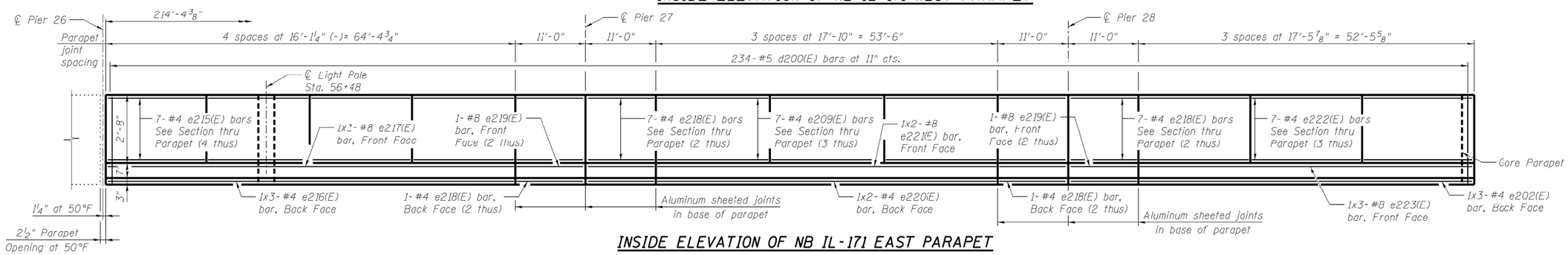

INSIDE ELEVATION OF NB IL-171 EAST PARAPET

(Reflected View Shown)

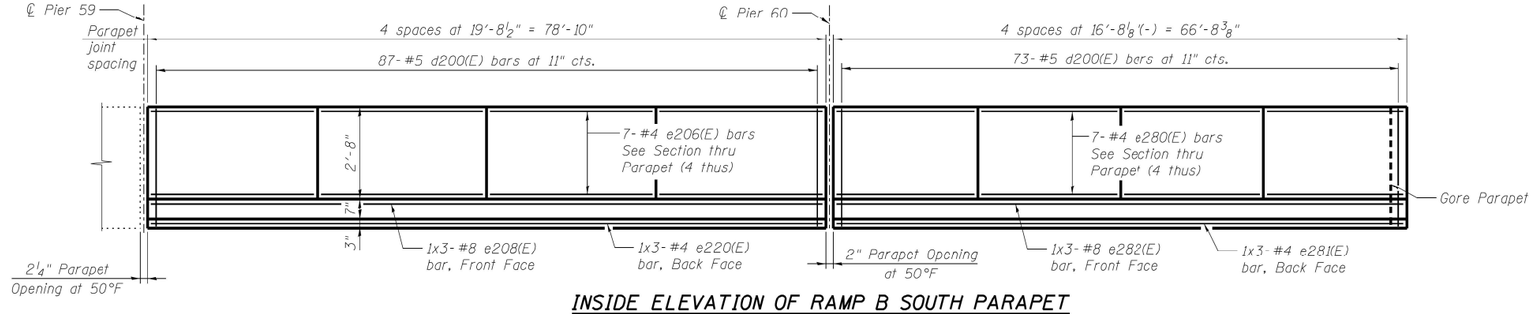

INSIDE ELEVATION OF RAMP B SOUTH PARAPET

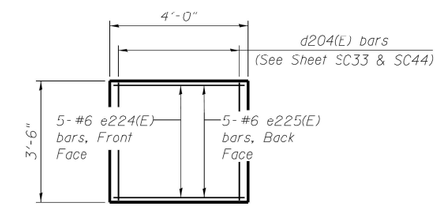

INSIDE ELEVATION OF GORE PARAPET

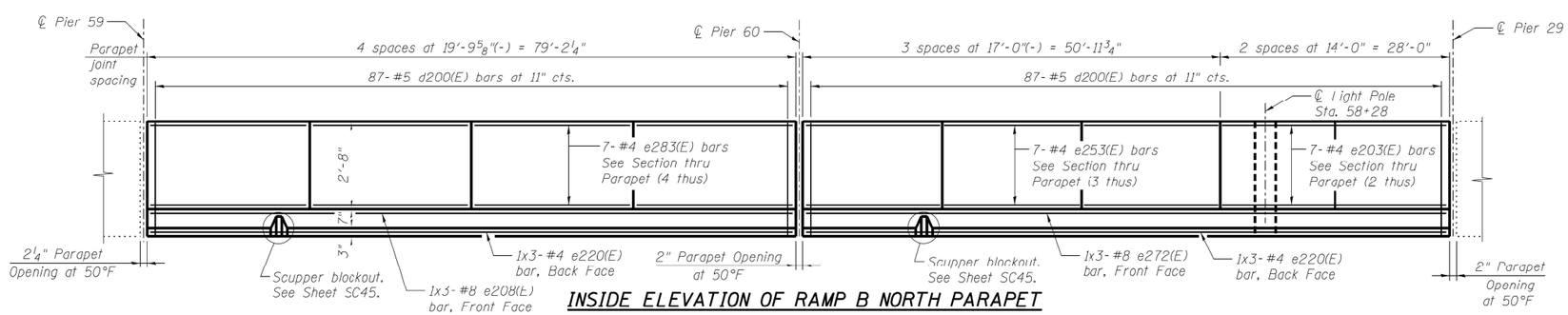

INSIDE ELEVATION OF RAMP B NORTH PARAPET

(Reflected View Shown)

MINIMUM BAR LAP

(Parapet)
#4 bar = 2'-0"
#8 bar = 5'-2"

NOTES:

1. All dimensions shown are along the toe of the parapet (gutterline)
2. Bars indicated thus 1x3- #8 etc. indicates 1 line of bars with 3 lengths per line.
3. See Sheet SC44 for Section Thru Parapet.

USER NAME = Ivan.Diaz	DESIGNED -	REVISED -	STATE OF ILLINOIS DEPARTMENT OF TRANSPORTATION
	DRAWN -	REVISED -	
PLOT SCALE = 100.0000 ' / in.	CHECKED -	REVISED -	
PLOT DATE = 12/13/2022	DATE -	REVISED -	

EX. PARAPET ELEVATION UNIT D SPANS 4 – 6 & UNIT D RAMP B
SN: 016–2456

SCALE: | SHEET OF SHEETS | STA. TO STA.

FAP RTE.	SECTION	COUNTY	TOTAL SHEETS	SHEET NO.
372	FAP 372 22 VARIOUS BS	COOK	138	111
		CONTRACT NO. 62U38		
		ILLINOIS	FED. AID PROJECT	

MODEL: Default
FILE NAME: pw:\\ildot-pw.bentley.com:PWIDOT\Documents\IDOT Offices\District 1\Project\D104323\CADData\Design\D104323-sht-i4sn.dgn

FOR INFORMATION ONLY

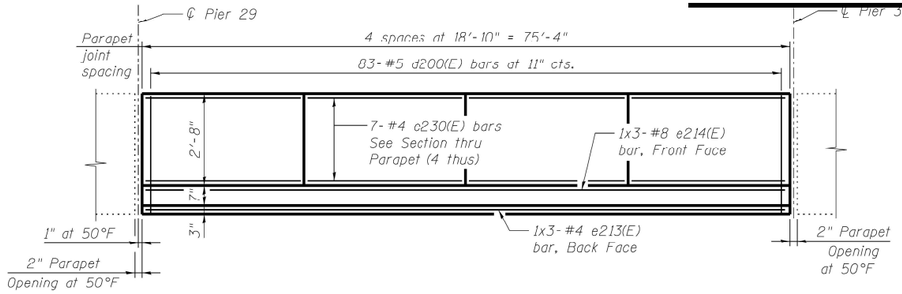

INSIDE ELEVATION OF SPAN 7 WEST PARAPET

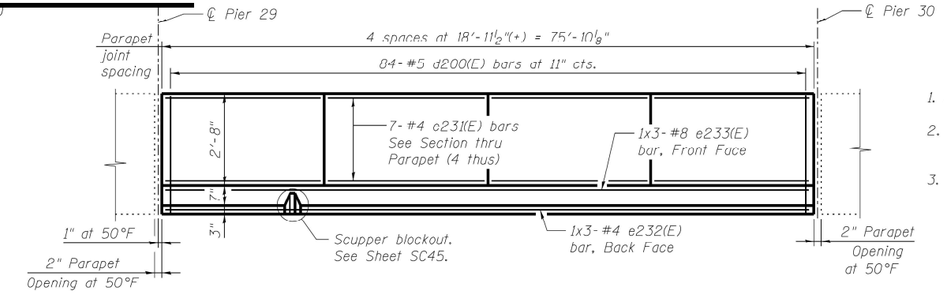

INSIDE ELEVATION OF SPAN 7 EAST PARAPET

(Reflected View Shown)

NOTES:

1. All dimensions shown are along the toe of the parapet (gutterline)
2. Bars indicated thus 1x3-#8 etc. indicates 1 line of bars with 3 lengths per line.
3. See Sheet SC44 for Section Thru Parapet.

MINIMUM LAP

(Parapet)
#4 bar = 2'-0"
#8 bar = 5'-2"

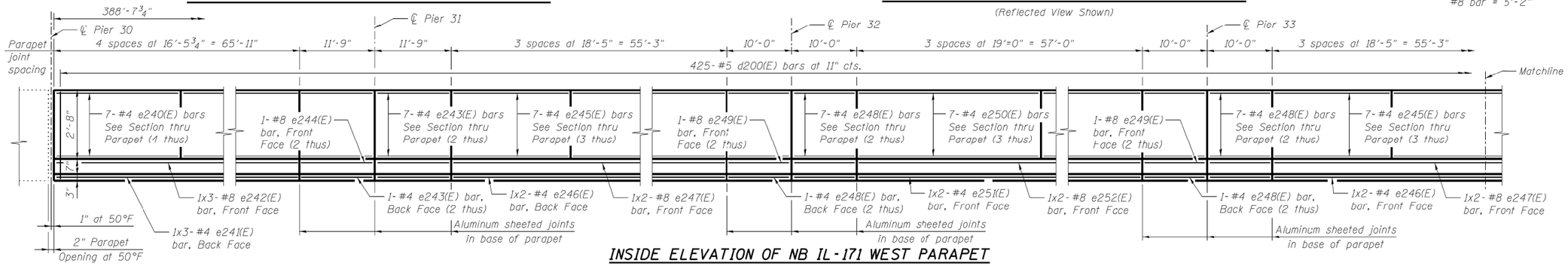

INSIDE ELEVATION OF NB IL-171 WEST PARAPET

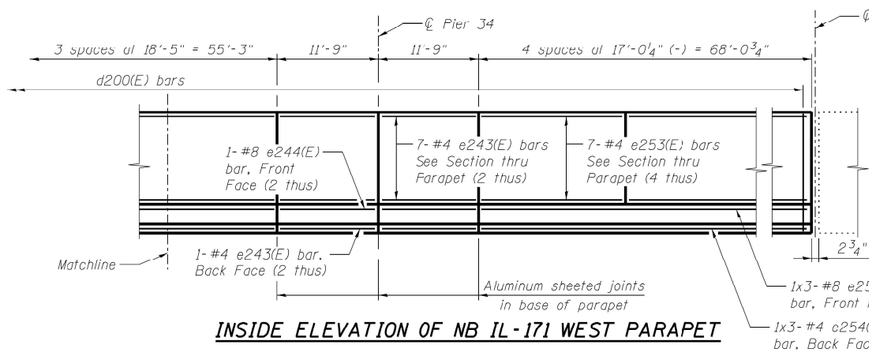

INSIDE ELEVATION OF NB IL-171 WEST PARAPET

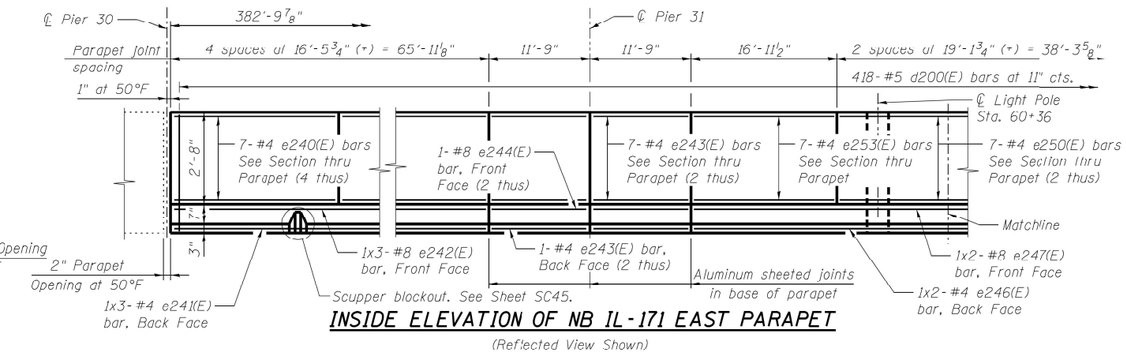

INSIDE ELEVATION OF NB IL-171 EAST PARAPET

(Reflected View Shown)

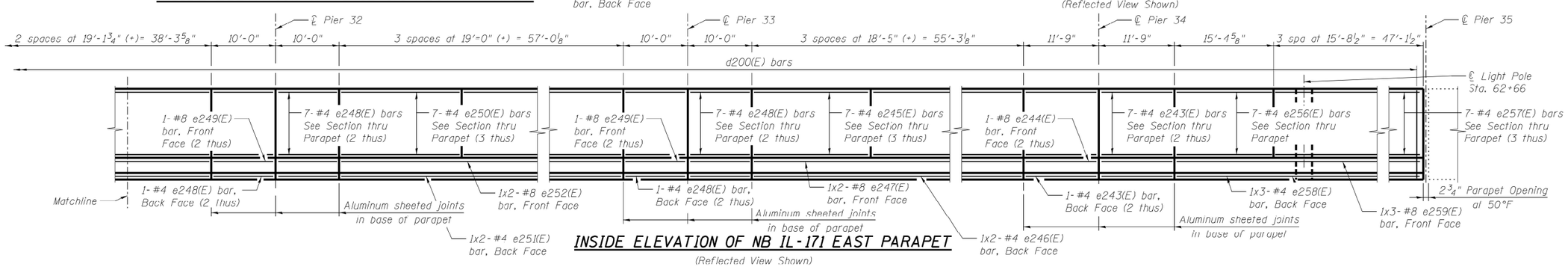

INSIDE ELEVATION OF NB IL-171 EAST PARAPET

(Reflected View Shown)

MODEL: Default
FILE NAME: pw:\\ildot-pw.bentley.com:PWIDOT\Documents\IDOT Offices\District 1\Projects\D104323\CADData\Design\D104323-ih-sh.dgn

USER NAME = Ivan.Diaz	DESIGNED -	REVISED -	STATE OF ILLINOIS DEPARTMENT OF TRANSPORTATION
	DRAWN -	REVISED -	
PLOT SCALE = 100.0000 ' / in.	CHECKED -	REVISED -	
PLOT DATE = 12/13/2022	DATE -	REVISED -	

EXISTING PARAPET ELEVATION UNIT D SPAN 7 AND UNIT E
SN: 016-2456

SCALE: | SHEET OF SHEETS | STA. TO STA.

FAP RTE.	SECTION	COUNTY	TOTAL SHEETS	SHEET NO.
372	FAP 372 22 VARIOUS BS	COOK	138	112
		CONTRACT NO. 62U38		
		ILLINOIS FED. AID PROJECT		

FOR INFORMATION ONLY

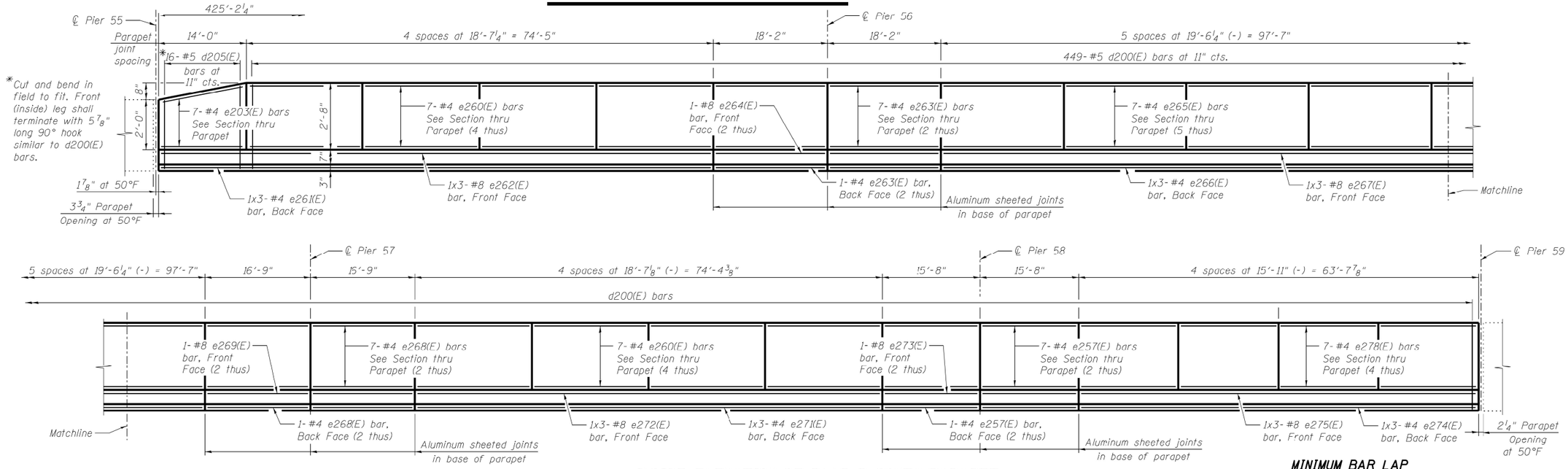

INSIDE ELEVATION OF RAMP B SOUTH PARAPET

MINIMUM BAR LAP

(Parapet)
#4 bar = 2'-0"
#8 bar = 5'-2"

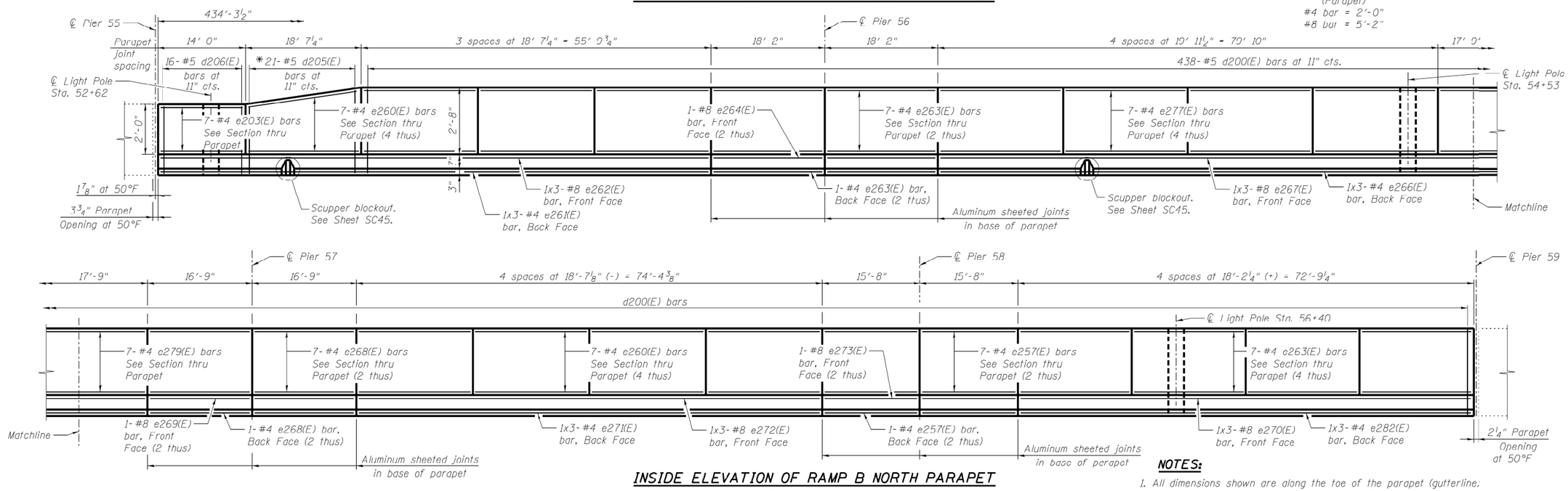

INSIDE ELEVATION OF RAMP B NORTH PARAPET

(Reflected View Shown)

NOTES:

1. All dimensions shown are along the toe of the parapet (gutterline.
2. Bars indicated thus 1x3-#8 etc. indicates 1 line of bars with 3 lengths per line.
3. See Sheet SC44 for Section Thru Parapet.

MODEL: Default
FILE NAME: pw:\\ildot-pw.bentley.com:PWIDOT\Documents\IDOT Offices\District 1\Projects\D104323\CADData\Design\D104323-h-Ban.dgn

USER NAME = Ivan.Diaz	DESIGNED -	REVISED -	
	DRAWN -	REVISED -	
PLOT SCALE = 100.0000 ' / in.	CHECKED -	REVISED -	
PLOT DATE = 12/13/2022	DATE -	REVISED -	

STATE OF ILLINOIS
DEPARTMENT OF TRANSPORTATION

EXISTING PARAPET ELEVATION UNIT B RAMP B
SN: 016-2456

SCALE: | SHEET OF SHEETS | STA. TO STA.

FAP RTE.	SECTION	COUNTY	TOTAL SHEETS	SHEET NO.
372	FAP 372 22 VARIOUS BS	COOK	138	113
		CONTRACT NO. 62U38		
	ILLINOIS	FED. AID PROJECT		

FOR INFORMATION ONLY

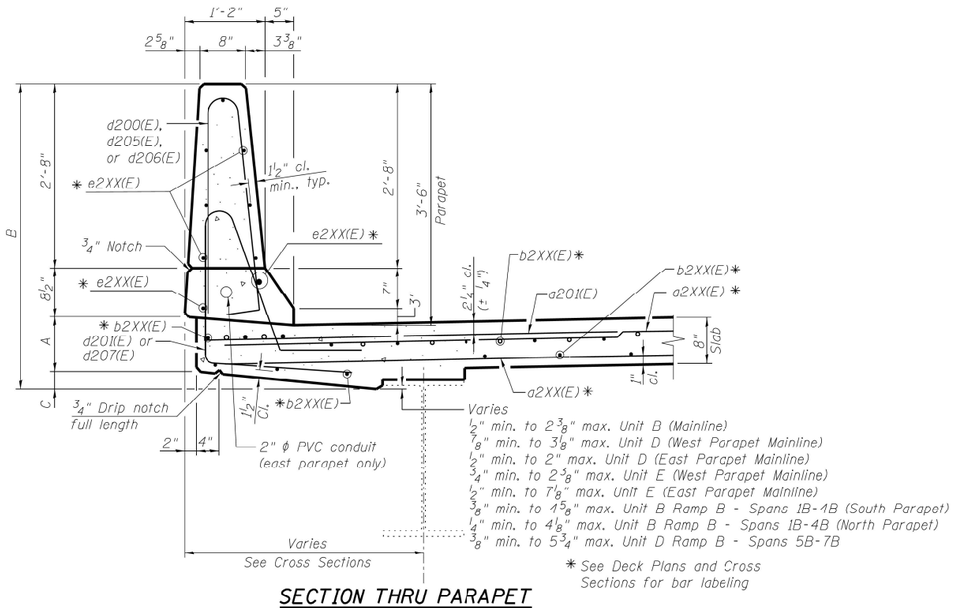

SECTION THRU PARAPET

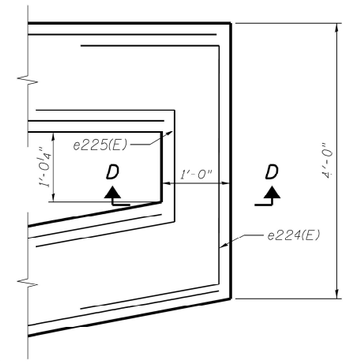

DETAIL 1

(See Sheet SC32)

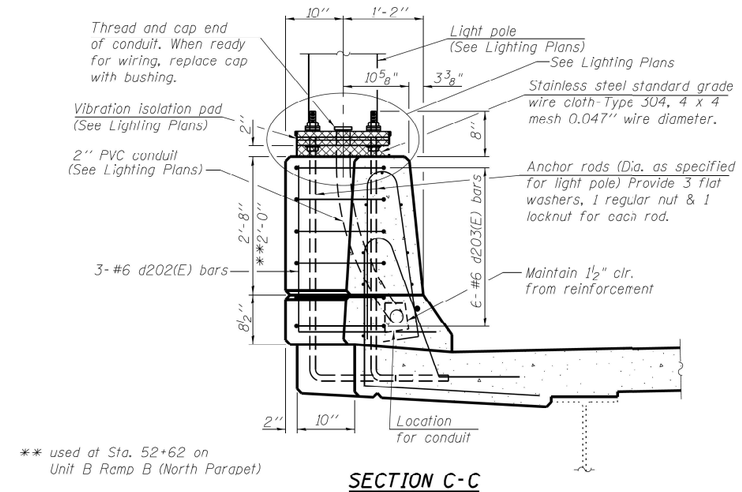

✱✱ used at Sta. 52+62 on Unit B Ramp B (North Parapet)

SECTION C-C

Location	A	B	C
Unit B (Mainline)	9 1/2"	4'-6"	4"
Unit D (West Parapet Mainline)	9 1/2"	4'-7"	5"
Unit D (East Parapet Mainline)	9 1/2"	4'-6"	4"
Unit E (West Parapet Mainline)	9 1/2"	4'-7"	5"
Unit E (East Parapet Mainline)	14"	4'-11 1/2"	5"
Unit B Ramp B - Spans 1B-4B (South Parapet)	11"	4'-8 1/2"	5"
Unit B Ramp B - Spans 1B-4B (North Parapet)	9 1/2"	4'-7"	5"
Unit D Ramp B - Spans 5B-7B	11 1/2"	4'-9"	5"

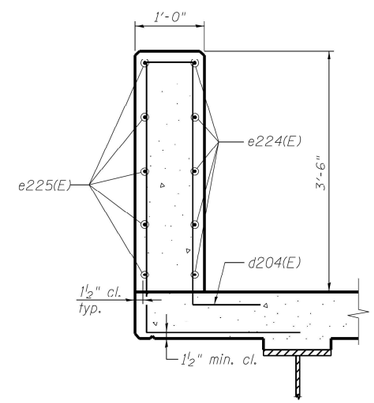

SECTION D-D

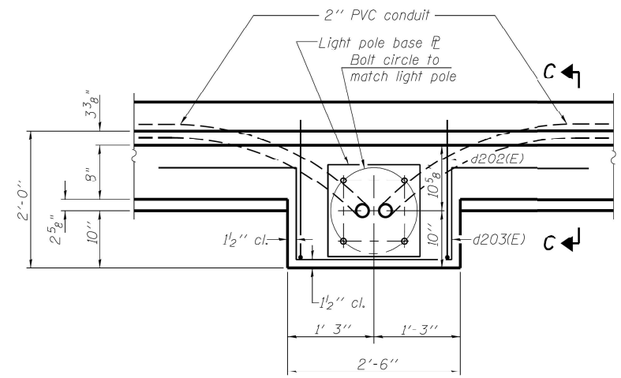

PLAN

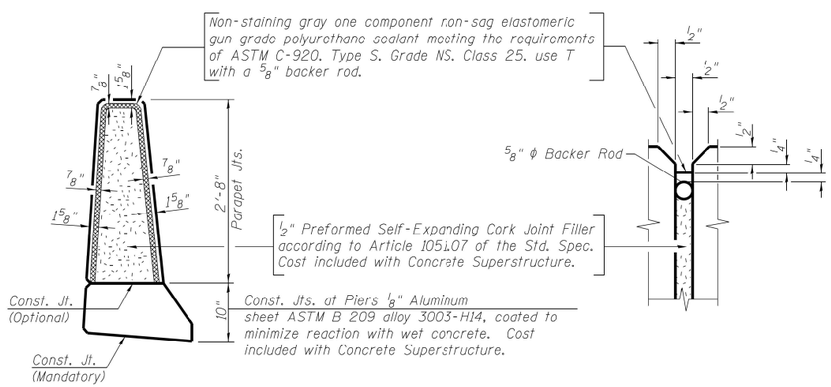

PARAPET JOINT DETAILS

NOTE:

Cost of anchor rods is included with "Concrete Superstructure".

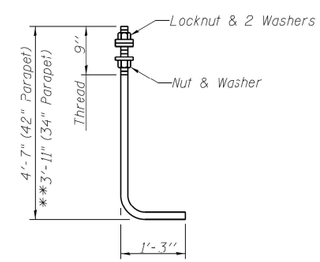

ANCHOR ROD

Diameter as specified for light poles.
(ASTM F 1554 Grade 105)
Full length hot dipped galvanized.

MODEL: Default
FILE NAME: pw:\\illinois-pw.bentley.com:PWIDOT\Documents\IDOT Offices\District 1\Projects\D104323\CADData\Design\D104323-sht-4ban.dgn

USER NAME = Ivan.Diaz	DESIGNED -	REVISED -	
	DRAWN -	REVISED -	
PLOT SCALE = 100.0000 ' / in.	CHECKED -	REVISED -	
PLOT DATE = 12/13/2022	DATE -	REVISED -	

STATE OF ILLINOIS
DEPARTMENT OF TRANSPORTATION

EXISTING PARAPET DETAILS
SN: 016-2456

SCALE: | SHEET OF SHEETS | STA. TO STA.

FAP RTE.	SECTION	COUNTY	TOTAL SHEETS	SHEET NO.
372	FAP 372 22 VARIOUS BS	COOK	138	114
		CONTRACT NO. 62U38		
		ILLINOIS FED. AID PROJECT		

FOR INFORMATION ONLY

Bench Mark: Chiseled square of SW corner of SB IL 171 bridge wingwall over Des Plaines River. El. 622.14.

Existing Structure: S.N. 016-2457 (Southbound) was originally built in 1964 under Section 0707-675HB. The structure consists of a 7" concrete deck with a 1½" microsilica overlay. The structure consists of a twelve span mainline bridge and a three span ramp bridge (Ramp E), supported by 13 multi-column concrete piers (End piers 4, 16 & 41 not included), predominantly founded on steel BP-piles with a select few on the north side of the structure supported on spread footings. The mainline structure is 973'-3⅝" centerline of pier to centerline of pier, with an out to out deck width which varies from 36'-0" to 79'-1" with no skew angle. The Ramp E Structure has an out to out deck width of 28'-0", with a varying skew angle. Traffic to be maintained utilizing crossovers.

No salvage.

All elevations in the proposed plans are based on NAVD88 Datum. Elevations in the existing plans are based on the NGVD29 Datum. NGVD29 Elev. 584.50 = NAVD88 Elev. 584.22.

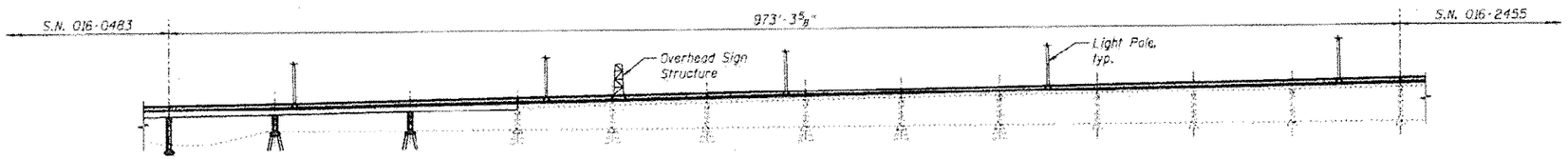

REFLECTED ELEVATION
(Looking South)

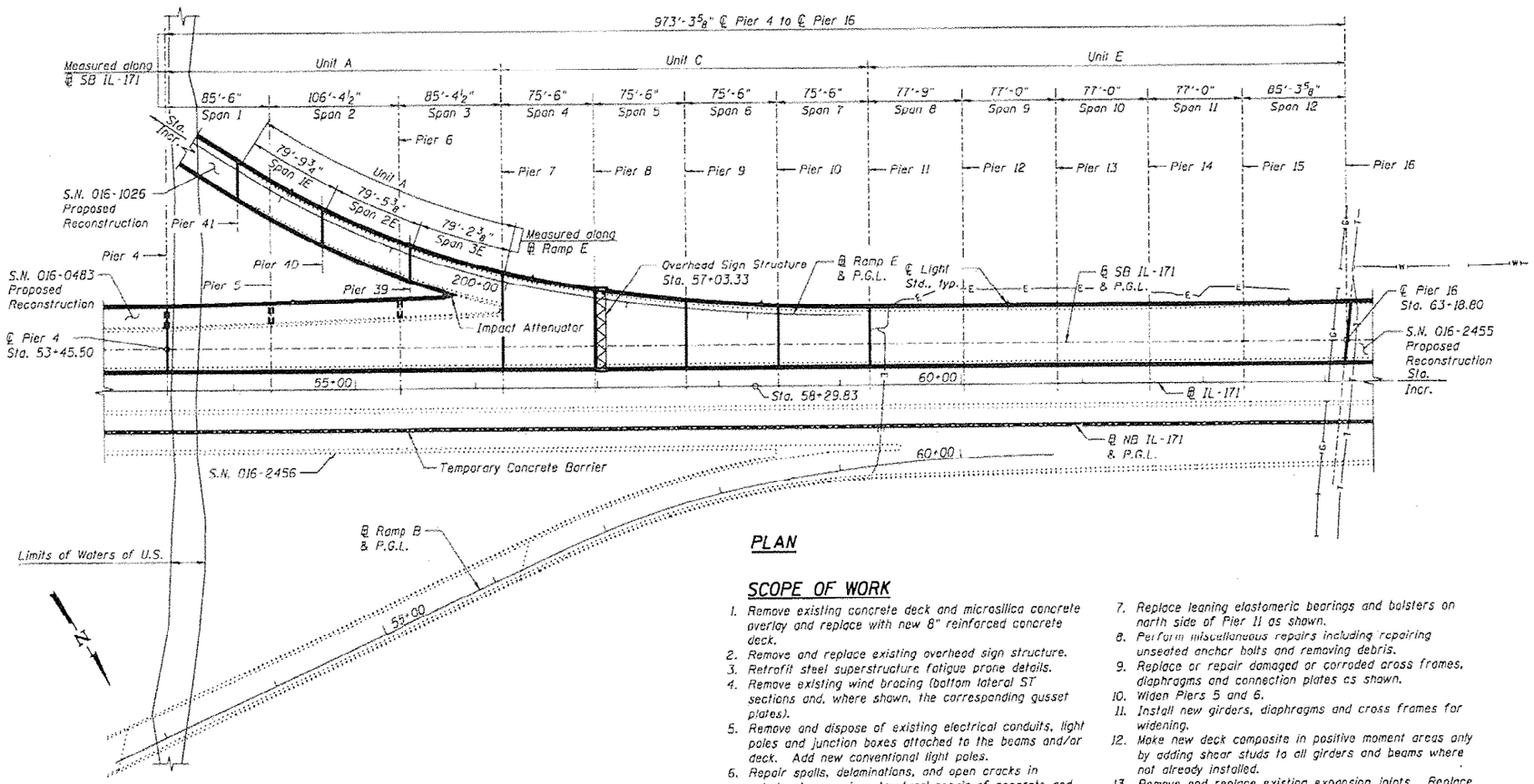

PLAN

SCOPE OF WORK

1. Remove existing concrete deck and microsilica concrete overlay and replace with new 8" reinforced concrete deck.
2. Remove and replace existing overhead sign structure.
3. Retrofit steel superstructure fatigue prone details.
4. Remove existing wind bracing (bottom lateral ST sections and, where shown, the corresponding gusset plates).
5. Remove and dispose of existing electrical conduits, light poles and junction boxes attached to the beams and/or deck. Add new conventional light poles.
6. Repair spalls, delaminations, and open cracks in substructures using structural repair of concrete and epoxy crack injection.
7. Replace leaning elastomeric bearings and bolsters on north side of Pier 11 as shown.
8. Perform miscellaneous repairs including repairing unseated anchor bolts and removing debris.
9. Replace or repair damaged or corroded cross frames, diaphragms and connection plates as shown.
10. Widen Piers 5 and 6.
11. Install new girders, diaphragms and cross frames for widening.
12. Make new deck composite in positive moment areas only by adding shear studs to all girders and beams where not already installed.
13. Remove and replace existing expansion joints. Replace filled in joints at Piers 8 and 39 with new expansion joints.

LOADING HS20-44
No future wearing surface allowed.

DESIGN STRESSES
FIELD UNITS (New Construction)

f'c = 3,500 psi
fy = 60,000 psi (Reinforcement)
fy = 50,000 psi (AASHTO M270 Grade 50)

FIELD UNITS (Exist. Construction)

f'c = 3,500 psi
fy = 40,000 psi (Reinforcement)
fy = 36,000 psi (Structural Steel)

DESIGN SPECIFICATIONS
2002 AASHTO Standard Specifications for Highway Bridges

SEISMIC DATA
Seismic Performance Category (SPC) = A
Bedrock Acceleration Coefficient (A) = 0.04g
Site Coefficient (S) = 1.0

EXISTING UTILITY LEGEND

- E — Underground Electric Line
- T — Underground Telephone Line
- G — Underground Gas Line
- W — Underground Water Line

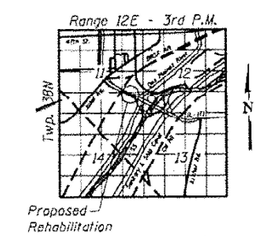

LOCATION SKETCH

MODEL: Default
FILE NAME: pw:\\ildot-pw.bentley.com:PWIDOT\Documents\IDOT Offices\District 1\Projects\D104323\CADData\Design\D104323-sht-plan.dgn

USER NAME = Ivan.Diaz	DESIGNED -	REVISED -	STATE OF ILLINOIS DEPARTMENT OF TRANSPORTATION
	DRAWN -	REVISED -	
PLOT SCALE = 100.0000 ' / in.	CHECKED -	REVISED -	
PLOT DATE = 12/13/2022	DATE -	REVISED -	

EXISTING GENERAL PLAN AND ELEVATION
SN: 016–2457

SCALE: | SHEET OF SHEETS | STA. TO STA.

FAP RTE.	SECTION	COUNTY	TOTAL SHEETS	SHEET NO.
372	FAP 372 22 VARIOUS BS	COOK	138	115

CONTRACT NO. 62U38

ILLINOIS | FED. AID PROJECT

FOR INFORMATION ONLY

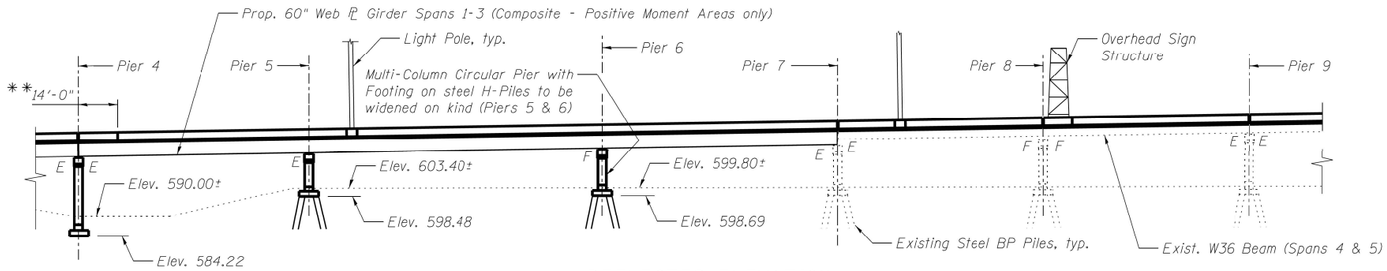

REFLECTED ELEVATION

(Looking South)

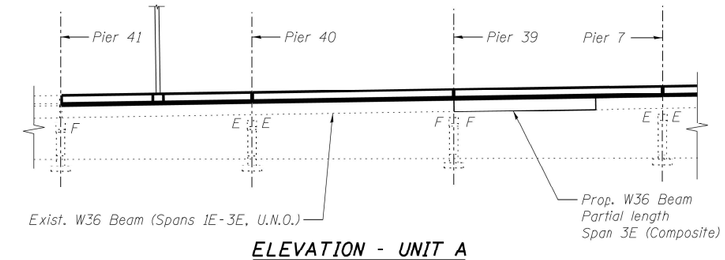

ELEVATION - UNIT A

(Looking Southwest)

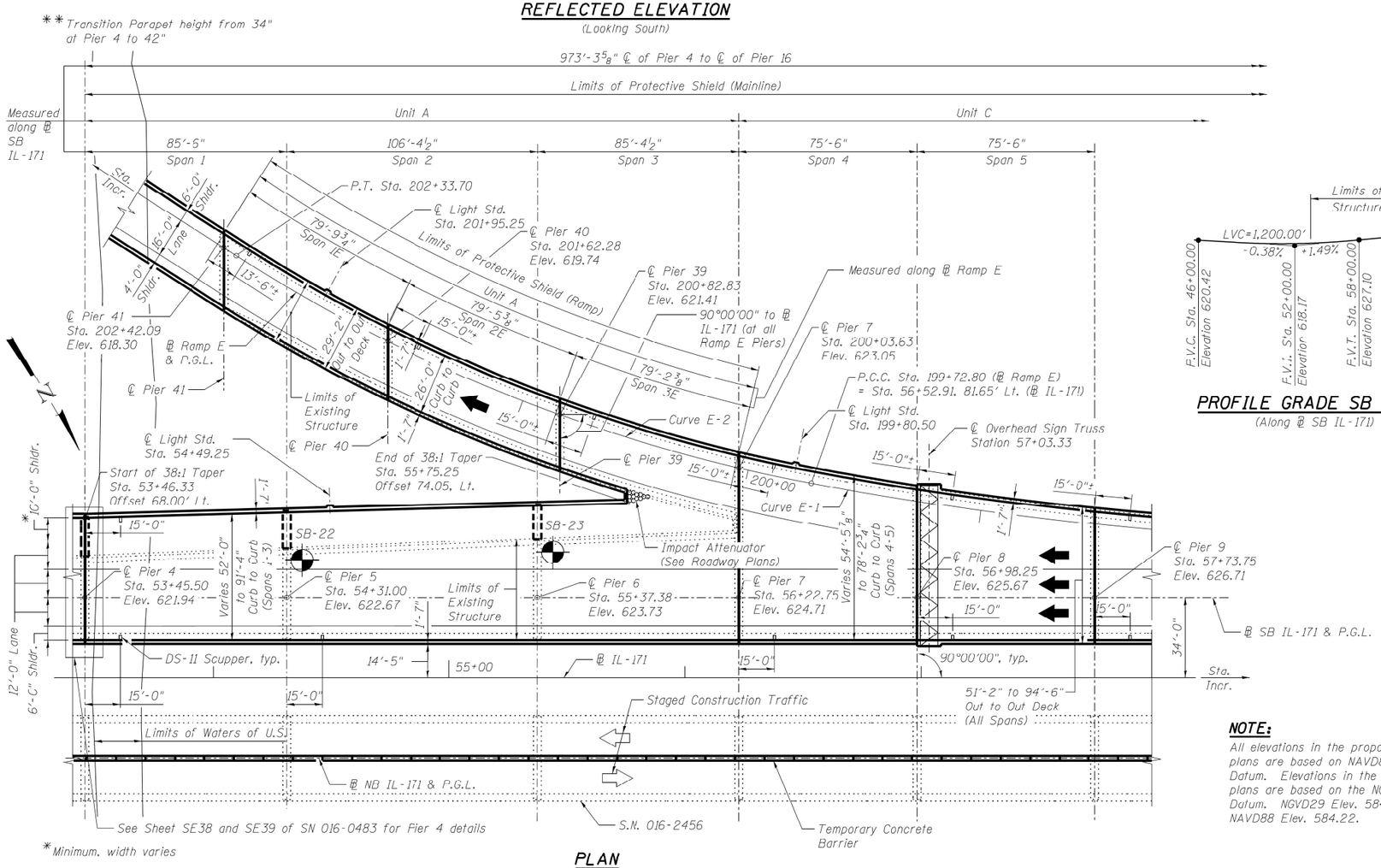

PLAN

CURVE DATA - ℄ RAMP E

CURVE E-1	CURVE E-2
P.I. Sta. = 198+45.45	P.I. Sta. = 201+04.82
Δ = 10°38'33" (RT)	Δ = 21°37'56" (RT)
D = 4°09'59"	D = 8°17'30"
R = 1,375.22'	R = 691.00'
T = 128.09'	T = 132.02'
L = 255.44'	L = 260.90'
E = 5.95'	E = 12.50'
P.C. Sta. = 197+17.36	P.C.C. Sta. = 199+72.80
P.C.C. Sta. = 199+72.80	P.T. Sta. = 202+33.70

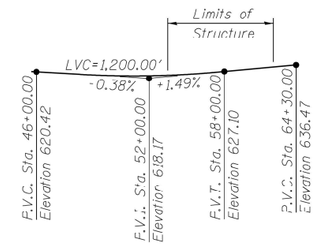

PROFILE GRADE SB IL-171

(Along ℄ SB IL-171)

S.E. DATA - RAMP E

Normal Crown = Sta. 197+06.62
2.0% to 3.56% S.E. = Sta. 197+06.62 to Sta. 198+21.67
3.56% to 3.95% S.E. = Sta. 198+21.67 to Sta. 198+50.00
3.95% to 4.55% S.E. = Sta. 198+50.00 to Sta. 198+75.00
4.55% to 5.15% S.E. = Sta. 198+75.00 to Sta. 199+00.00
5.15% to 6.2% S.E. = Sta. 199+00.00 to Sta. 199+50.00
6.2% S.E. = Sta. 199+50.00 to Sta. 201+70.00
6.2% S.E. to 2.3% S.E. = Sta. 201+70.00 to 203+00.00

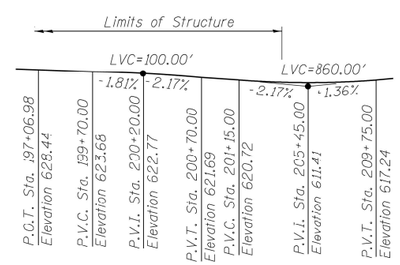

PROFILE GRADE RAMP E

(Along ℄ Ramp E)

NOTE:

All elevations in the proposed plans are based on NAVD88 Datum. Elevations in the existing plans are based on the NGVD29 Datum. NGVD29 Elev. 584.50 = NAVD88 Elev. 584.22.

MODEL: Default
FILE NAME: pw:\\ildot-pw.bentley.com:PWIDOT\Documents\IDOT Offices\District 1\Project\D104323\CADData\Design\D104323-sht-4bn.dgn

USER NAME = Ivan.Diaz	DESIGNED -	REVISED -	STATE OF ILLINOIS DEPARTMENT OF TRANSPORTATION
	DRAWN -	REVISED -	
PLOT SCALE = 100.0000 ' / in.	CHECKED -	REVISED -	
PLOT DATE = 12/13/2022	DATE -	REVISED -	

EXISTING GENERAL PLAN AND ELEVATION UNIT A & C
SN: 016-2457

SCALE: | SHEET OF SHEETS | STA. TO STA.

FAP RTE.	SECTION	COUNTY	TOTAL SHEETS	SHEET NO.
372	FAP 372 22 VARIOUS BS	COOK	138	116
		CONTRACT NO. 62U38		
		ILLINOIS FED. AID PROJECT		

FOR INFORMATION ONLY

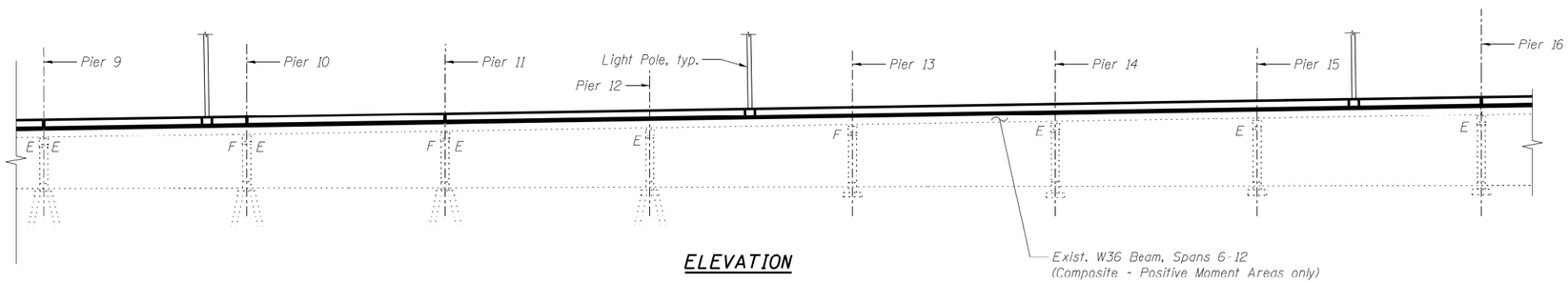

ELEVATION

EXISTING UTILITY LEGEND

- E — Underground Electric Line
- T — Underground Telephone Line
- G — Underground Gas Line
- W — Underground Water Line

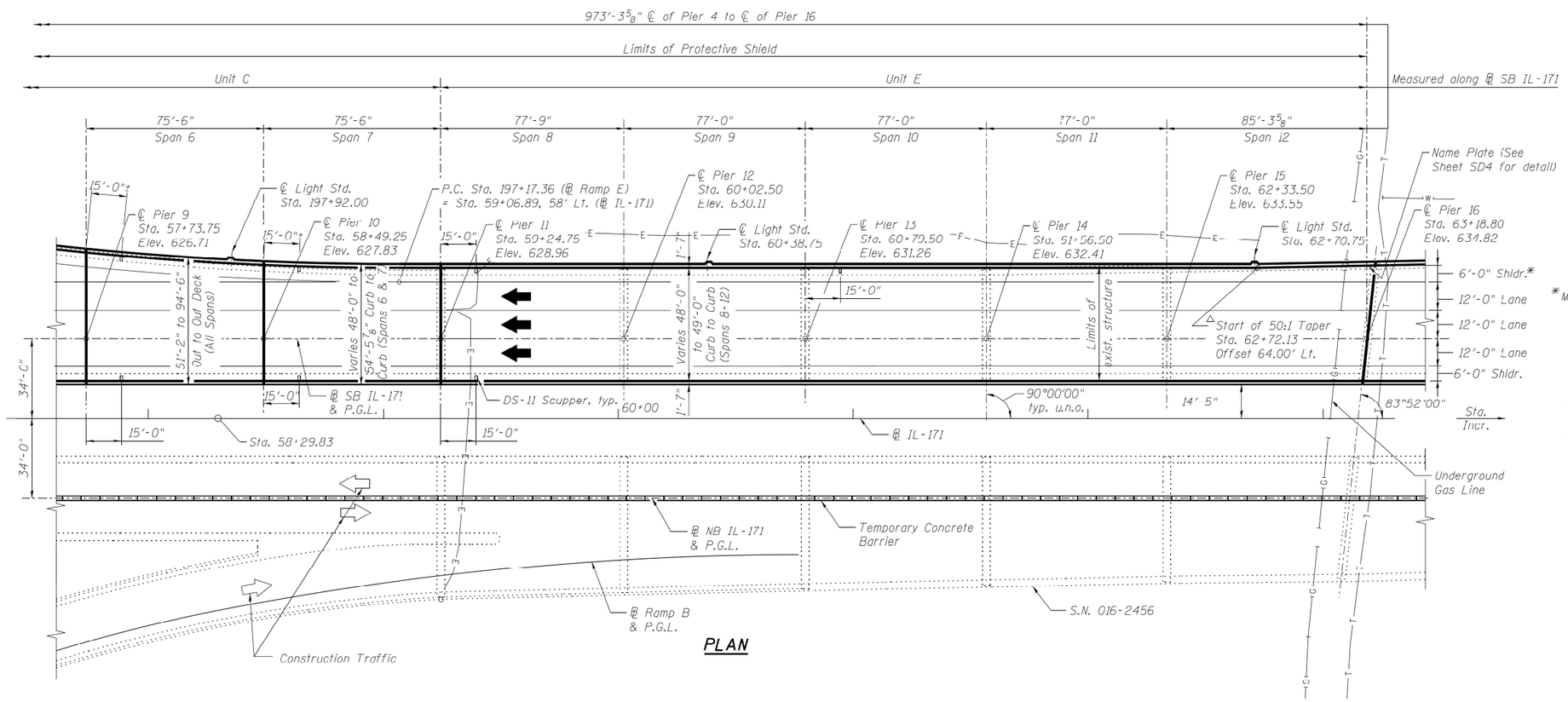

PLAN

△ End of Taper at Sta. 67+02.02 Offset 72.60' Lt.

NOTE:

All elevations in the proposed plans are based on NAVD88 Datum. Elevations in the existing plans are based on the NGVD29 Datum. NGVD29 Elev. 584.50 = NAVD88 Elev. 584.22.

MODEL: Default
FILE NAME: pw:\\ildot-pw.bentley.com:PWIDOT\Documents\IDOT Offices\District 1\Projects\D104323\CADData\Design\D104323-sht-plan.dgn

USER NAME = Ivan.Diaz	DESIGNED -	REVISED -	STATE OF ILLINOIS DEPARTMENT OF TRANSPORTATION
	DRAWN -	REVISED -	
PLOT SCALE = 100.0000 ' / in.	CHECKED -	REVISED -	
PLOT DATE = 12/13/2022	DATE -	REVISED -	

EXISTING GENERAL PLAN AND ELEVATION UNIT C & E
SN: 016-2457

SCALE: | SHEET OF SHEETS | STA. TO STA.

FAP RTE.	SECTION	COUNTY	TOTAL SHEETS	SHEET NO.
372	FAP 372 22 VARIOUS BS	COOK	138	117
		CONTRACT NO. 62U38		
		ILLINOIS FED. AID PROJECT		

FOR INFORMATION ONLY

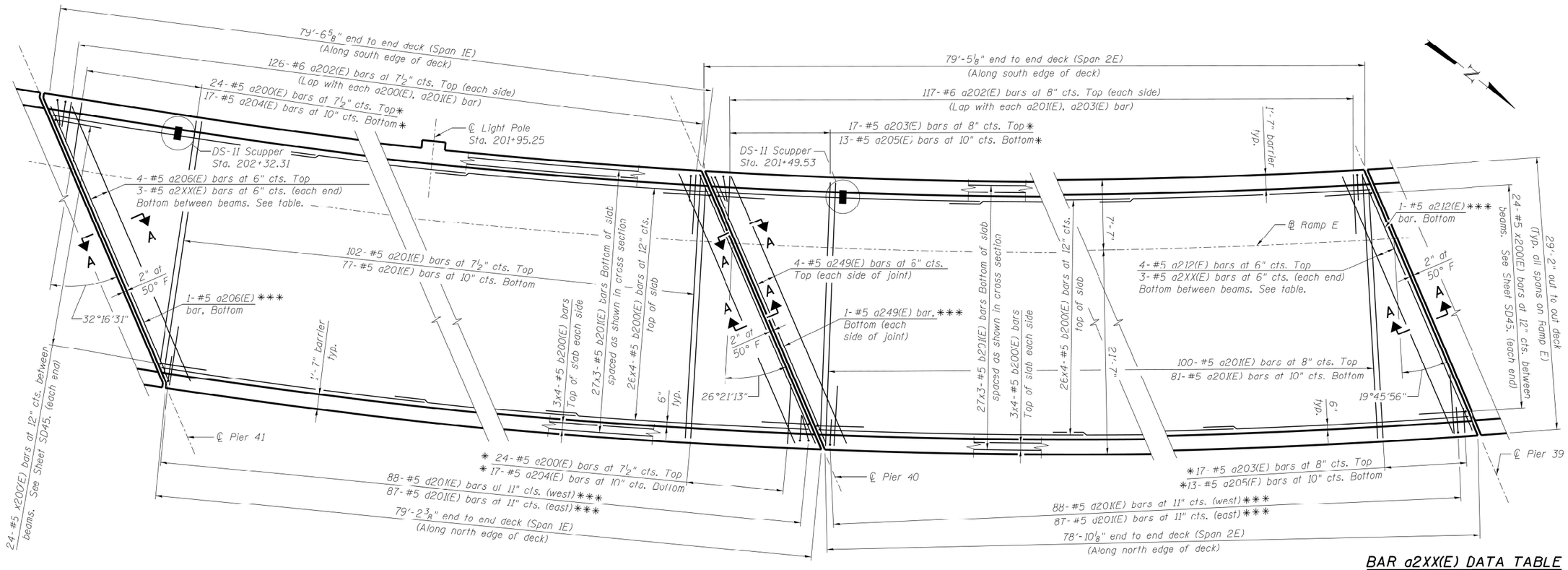

PLAN - RAMP E

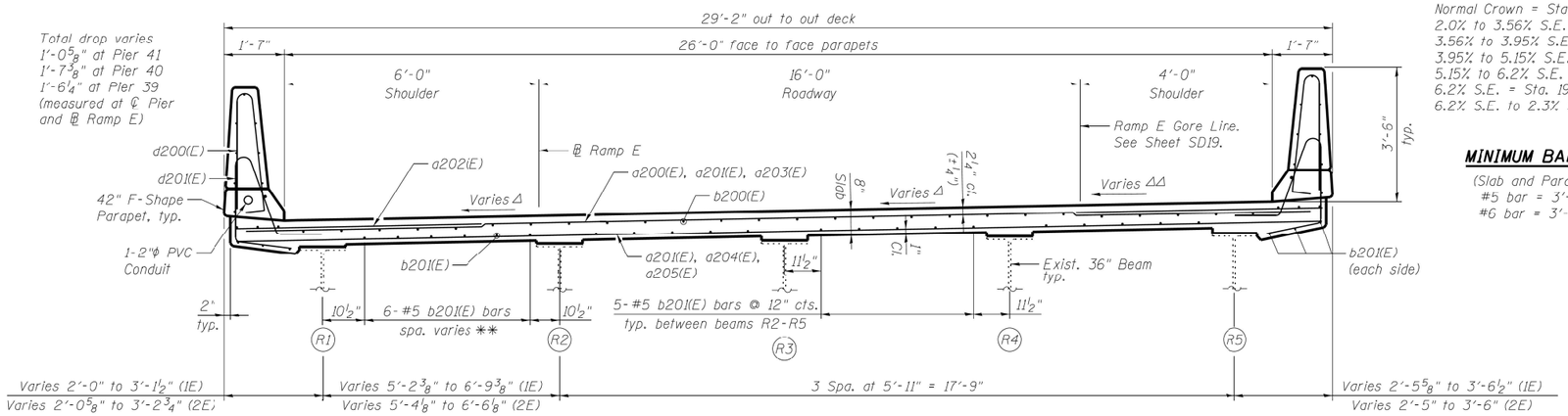

DECK CROSS SECTION - RAMP E

(Looking Downstation, North)

Δ See S.E. Data Table

ΔΔ Matches S.E. Data Table from Sta. 201+25.00 to end of structure at Pier 41. Linear slope transition from 6.2% at Sta. 201+25.00 to 2.2% at Sta. 200+46.84. See Sheet SD19.

S.E. DATA - RAMP E

Normal Crown = Sta. 197+06.62
2.0% to 3.56% S.E. = Sta. 197+06.62 to Sta. 198+21.67
3.56% to 3.95% S.E. = Sta. 198+21.67 to Sta. 198+50.00
3.95% to 5.15% S.E. = Sta. 198+50.00 to Sta. 199+00.00
5.15% to 6.2% S.E. = Sta. 199+00.00 to Sta. 199+50.00
6.2% S.E. = Sta. 199+50.00 to Sta. 201+70.00
6.2% S.E. to 2.3% S.E. = Sta. 201+70.00 to 203+00.00

BAR a2XX(E) DATA TABLE

Span	Pier	Bay	Bar
1E	41	R1-R2	a208(E)
1E	41	R2-R5	a207(E)
1E	40	R1-R2	a209(E)
1E	40	R2-R5	a207(E)
2E	40	R1-R2	a210(E)
2E	40	R2-R5	a247(E)
2E	39	R1-R2	a211(E)
2E	39	R2-R5	a247(E)

MINIMUM BAR LAP

(Slab and Parapet)
#5 bar = 3'-3"
#6 bar = 3'-10"

* Order a200(E), a203(E), a204(E) and a205(E) bars full length. Cut to fit skew and use remainder of bars in opposite end.

** 12" at Pier 41 (1E)
8 1/4" at Pier 40 (1E)
11 1/2" at Pier 40 (2E)
8 1/2" at Pier 39 (2E)

*** Cut to fit in field

NOTES:

1. For Superstructure Details, Section A-A, and Bar Bends, see Sheet SD45.
2. For Bill of Material, see Sheet SD46.
3. Bars indicated thus 20 x 3-#5 etc. indicates 20 lines of bars with 3 lengths per line.
4. Barrier widths are measured perpendicular from the edge of deck. Overhang widths are measured perpendicular from the fascia girders. Girder spacings are measured perpendicular from the east girder to the west girder at the centerline of bearing. All remaining deck dimensions are measured perpendicular to the baseline shown unless noted otherwise.
5. Dimensions are based on a Rolled Rail Strip Seal Joint. If the Contractor elects to use the Welded Rail Strip Seal Joint, deck dimensions may require adjustments to satisfy the details on Sheet SD49.

FOR INFORMATION ONLY

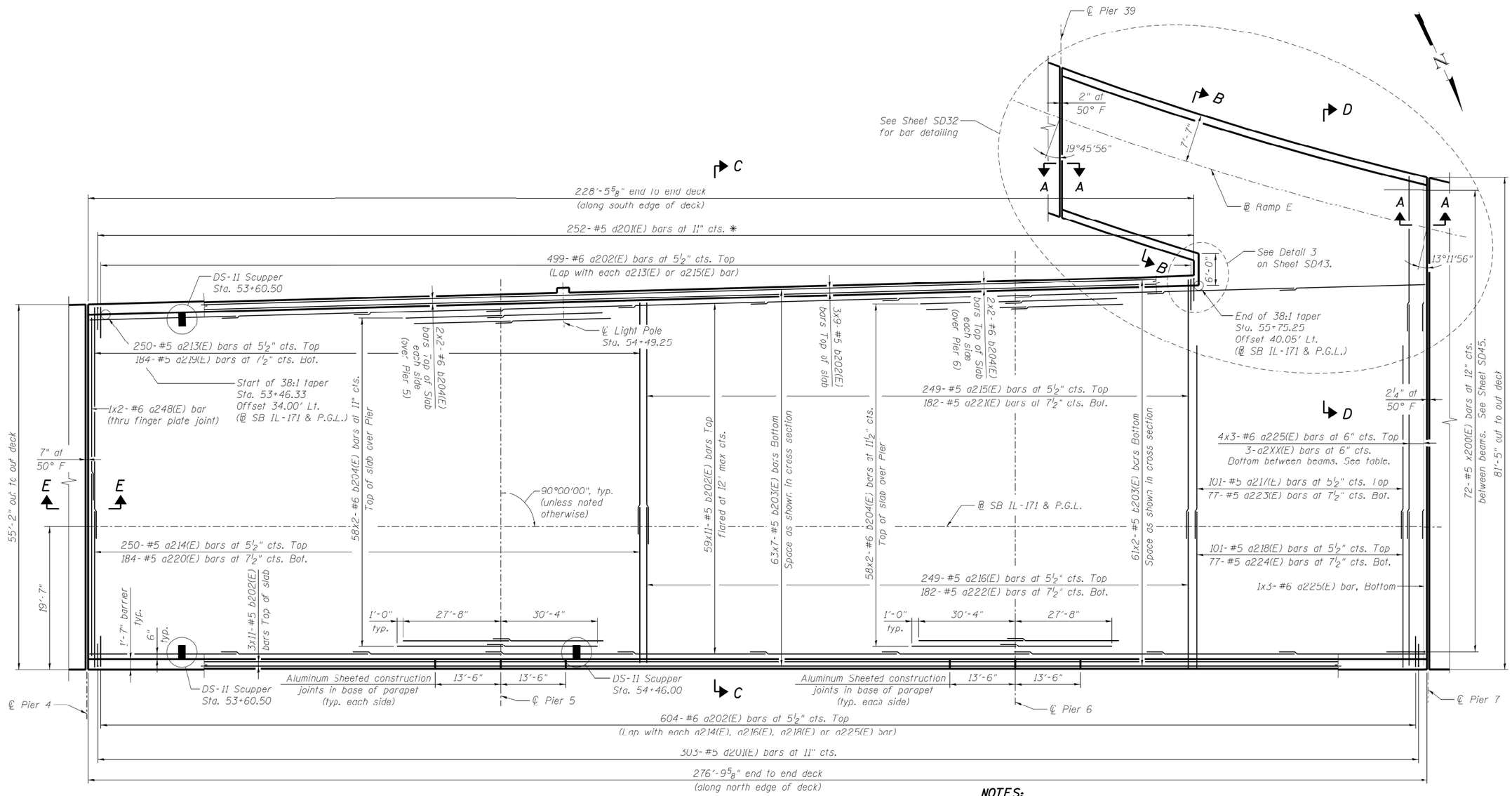

BAR a2XX(E) DATA TABLE

(Pier 7)

Bay	Bar	Size
R1-R4	a211(E)	#5
R4-A1	a226(E)	#5
A1-A2	a227(E)	#5
A2-A3	a210(E)	#5
A3-A6	a228(E)	#6
A6-A8	a229(E)	#5

MINIMUM BAR LAP

(Slab and Parapet)
#5 bar = 3'-3"
#6 bar = 3'-10"

PLAN - SPANS 1 THRU 3

* Cut to fit in field

NOTES:

1. For Superstructure Details, Section A-A, and Bar Bends, see Sheet SD45.
2. For Bill of Material, see Sheet SD46.
3. Bars indicated thus 20 x 3-#5 etc. indicates 20 lines of bars with 3 lengths per line.
4. For Section B-B, C-C, and D-D, see Sheet SD33.
5. Design stresses and deflections were calculated based on a single monolithic deck pour for all of Unit A. Use of staged construction joints and a deck pouring sequence will require a submittal to the Engineer for review and approval.
6. Dimensions are based on a Rolled Rail Strip Seal Joint. If the Contractor elects to use the Welded Rail Strip Seal Joint, deck dimensions may require adjustments to satisfy the details on Sheet SD49.
7. For Section E-E, see Sheet SD50.

MODEL: Default
FILE NAME: pw:\\ildot-pw.bentley.com:PWIDOT\Documents\IDOT Offices\District 1\Projects\D104323\CADData\Design\D104323-sht-plan.dgn

USER NAME = Ivan.Diaz	DESIGNED -	REVISED -	
	DRAWN -	REVISED -	
PLOT SCALE = 100.0000 ' / in.	CHECKED -	REVISED -	
PLOT DATE = 12/13/2022	DATE -	REVISED -	

STATE OF ILLINOIS
DEPARTMENT OF TRANSPORTATION

EXISTING DECK PLAN UNIT A (1 OF 2)
SN: 016-2457

SCALE: | SHEET OF SHEETS | STA. TO STA.

FAP RTE.	SECTION	COUNTY	TOTAL SHEETS	SHEET NO.
372	FAP 372 22 VARIOUS BS	COOK	138	119

CONTRACT NO. 62U38

ILLINOIS | FED. AID PROJECT

FOR INFORMATION ONLY

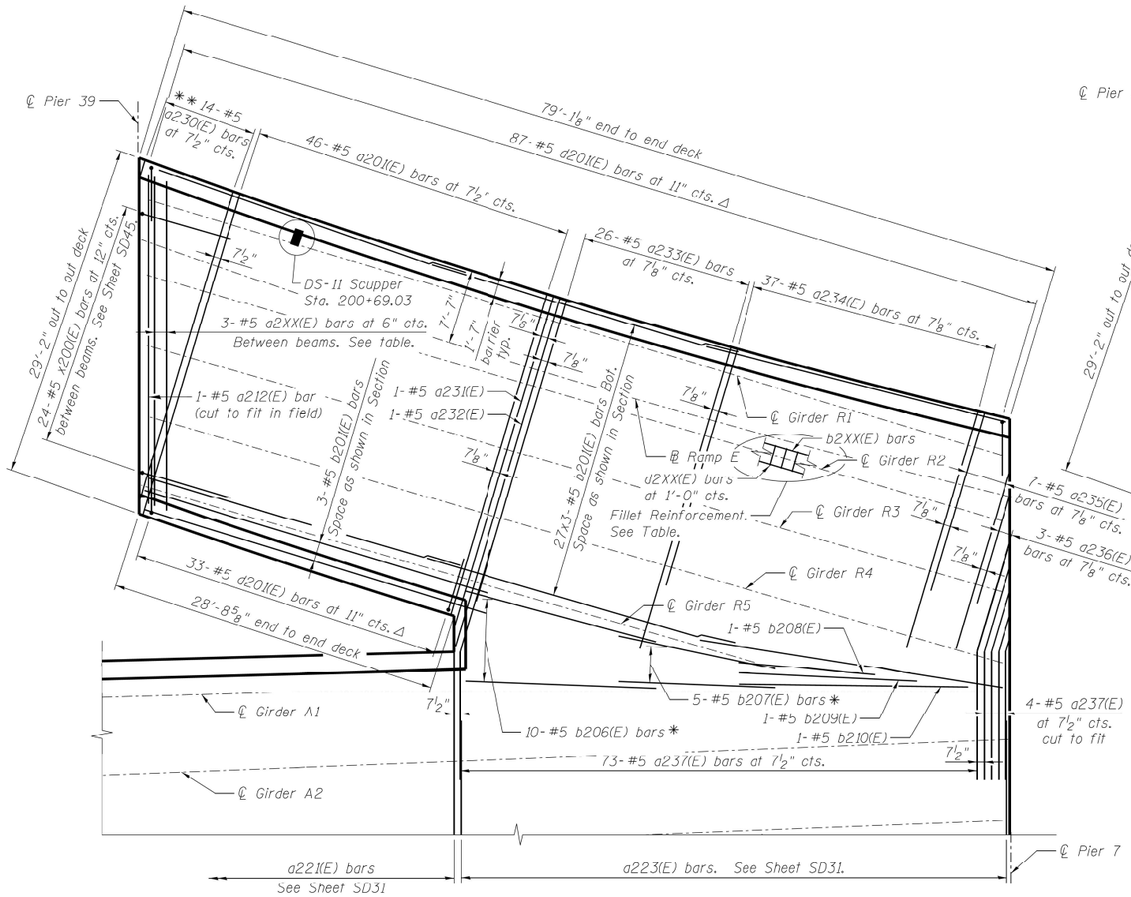

BOTTOM PLAN - SPAN 3E

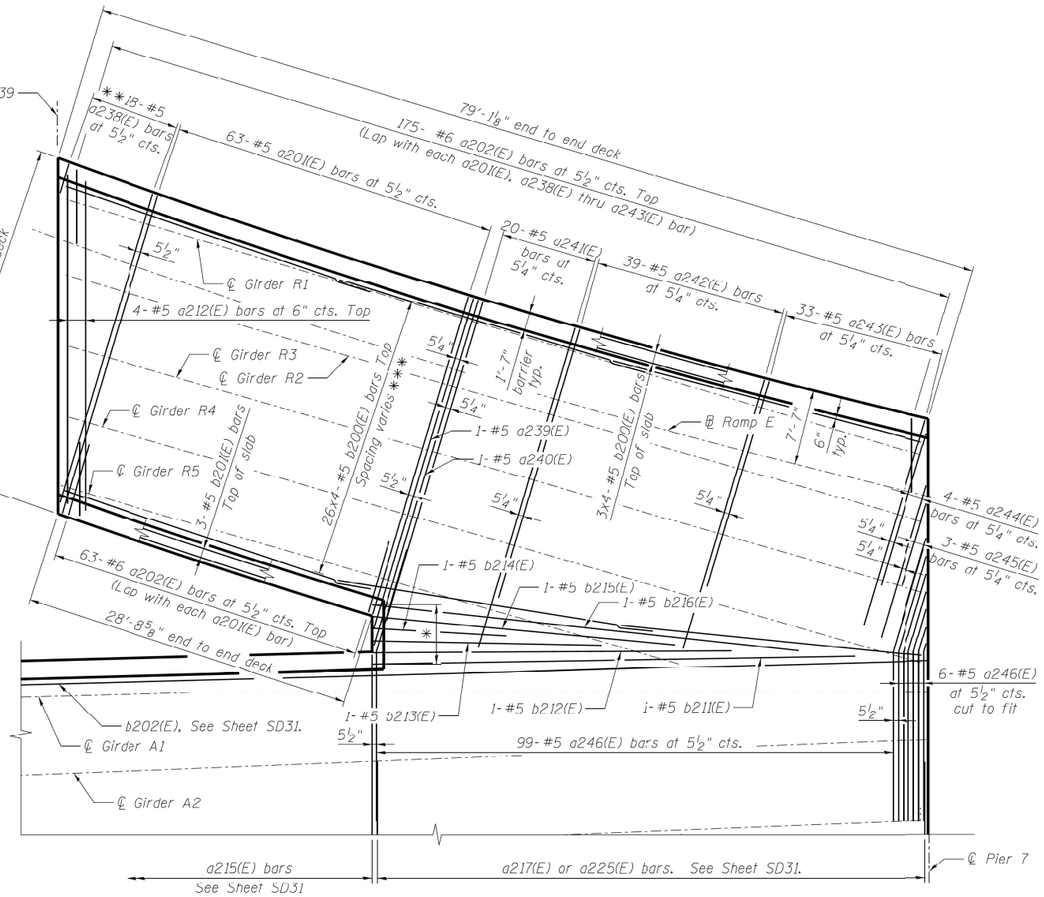

TOP PLAN - SPAN 3E

* equal spacing
** See cut diagram on sheet SD45
*** 12" at Pier 39
$8\frac{3}{4}$" at Pier 7
△ Cut to fit in field

BAR a2XX(E) DATA TABLE

(Pier 39)

Bay	Bar
R1-R2	a247(E)
R2-R5	a209(E)

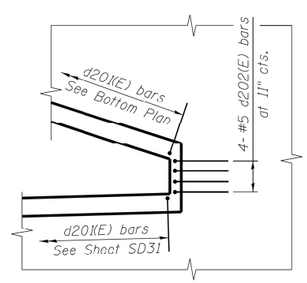

GORE PLAN

FILLET REINFORCEMENT DATA TABLE

Girder	Start Sta.	End Sta.	b2XX(E) bars	d2XX(E) bars
R1	200+13.13	200+73.57	2x2-#4 b218(E)	61-#4 d203(E)
R2	200+21.50	200+51.48	2-#4 b218(E)	31-#4 d203(E)

For Fillet Reinforcement detail, see Sheet SD55.

NOTES:

1. For Superstructure Details and Bar Bends, see Sheet SD45.
2. For Bill of Material, see Sheet SD46.
3. Bars indicated thus 20 x 3-#5 etc. indicates 20 lines of bars with 3 lengths per line.
4. Ramp E Span 3E reinforcement included in Unit A Bill of Material.
5. Dimensions are based on a Rolled Rail Strip Seal Joint. If the Contractor elects to use the Welded Rail Strip Seal Joint, deck dimensions may require adjustments to satisfy the details on Sheet SD49.

MINIMUM BAR LAP

(Slab and Parapet)
#4 bar = 2'-7"
#5 bar = 3'-3"
#6 bar - 3'-10"

MODEL: Default
FILE NAME: pw:\\ildot-pw.bentley.com:PWIDOT\Documents\IDOT Offices\District 1\Projects\D104323\CADData\Design\D104323-sht-Ann.dgn

USER NAME = Ivan.Diaz	DESIGNED -	REVISED -	STATE OF ILLINOIS DEPARTMENT OF TRANSPORTATION
	DRAWN -	REVISED -	
PLOT SCALE = 100.0000 ' / in.	CHECKED -	REVISED -	
PLOT DATE = 12/13/2022	DATE -	REVISED -	

EXISTING DECK PLAN UNIT A (2 OF 2)
SN: 016-2457

SCALE: | SHEET OF SHEETS | STA. TO STA.

FAP RTE.	SECTION	COUNTY	TOTAL SHEETS	SHEET NO.
372	FAP 372 22 VARIOUS BS	COOK	138	120

CONTRACT NO. 62U38

ILLINOIS | FED. AID PROJECT

FOR INFORMATION ONLY

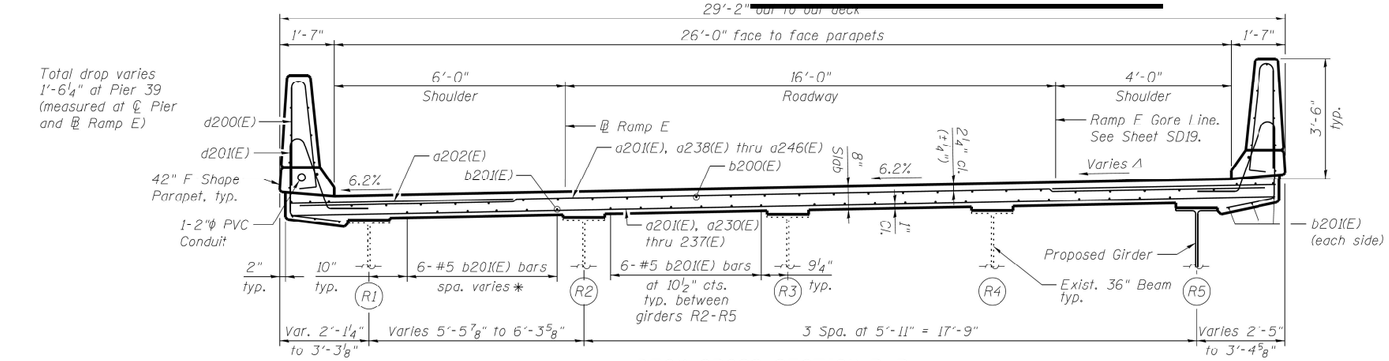

DECK CROSS SECTION B-B

(Looking Downstation, North)

NOTES:

1. For Superstructure Details and Bar Bends, see Sheet SD45.
2. For Bill of Material, see Sheet SD46.
3. Barrier widths are measured perpendicular from the edge of deck. Overhang widths are measured perpendicular from the fascia girders. Girder spacings are measured perpendicular from the east girder to the west girder at the centerline of bearing. All remaining deck dimensions are measured perpendicular to the baseline shown unless noted otherwise.

Δ Linear slope transition from 6.2% at Sta. 201+25.00 to 2.2% at Sta. 200+46.84. See Sheet SD19.

ΔΔ Cross slope varies in gore from Sta. 55+75.25 to Sta. 56+22.75. See Sheet SD19.

ΔΔΔ Measured perpendicular to ℄ SB IL-171.

MINIMUM LAP

(Slab and Parapet)
#5 bar = 3'-3"
#6 bar = 3'-10"

∗ 11" at Pier 39
9¼" at Pier 7
∗∗ 11" at Pier 4
7¼" at Pier 6
∗∗∗ 11" at Pier 4
5⅝" at Pier 7

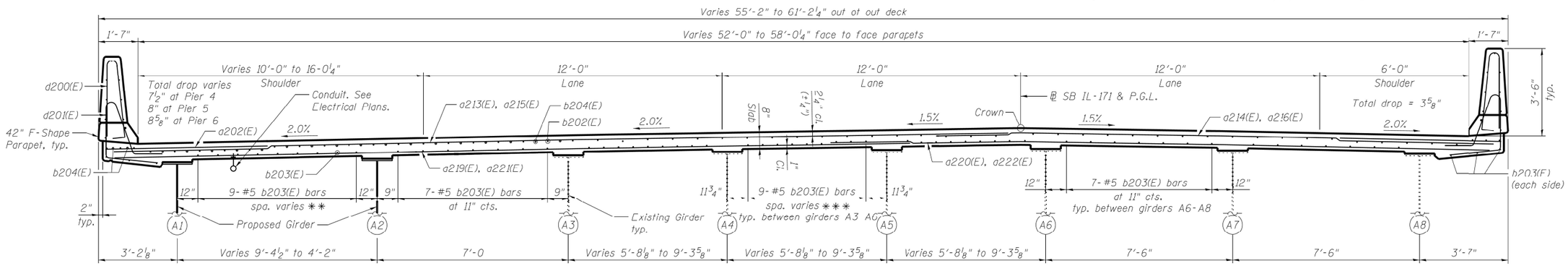

∗∗∗∗ Measured from ℄ SB IL-171 & P.G.L.

DECK CROSS SECTION C-C

(Looking Upstation, North)

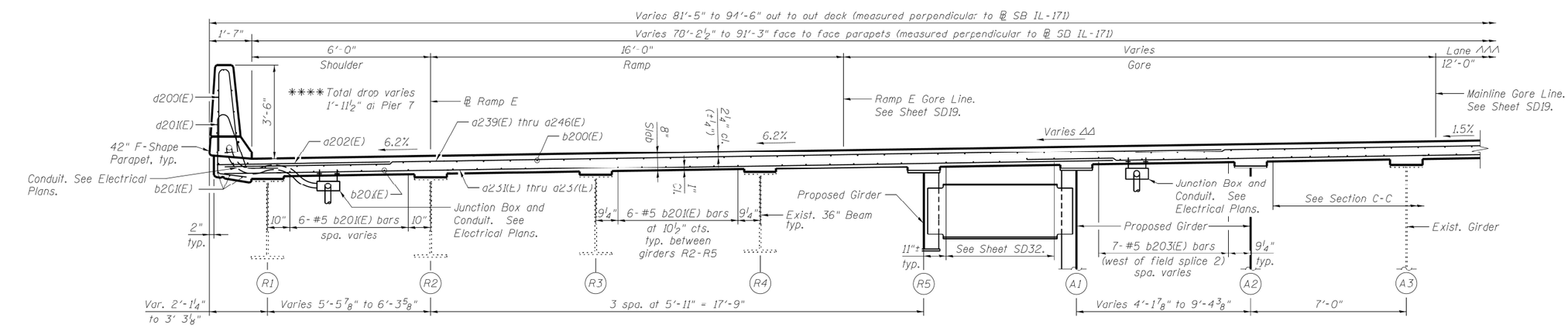

PARTIAL DECK CROSS-SECTION D-D

(Looking Upstation, North)

MODEL: Default
FILE NAME: pw:\\ildot-pw.bentley.com:PWIDOT\Documents\IDOT Offices\District 1\Projects\D104323\CADData\Design\D104323-sht-dgn.dgn

USER NAME = Ivan.Diaz	DESIGNED -	REVISED -	STATE OF ILLINOIS DEPARTMENT OF TRANSPORTATION
	DRAWN -	REVISED -	
PLOT SCALE = 100.0000 ' / in.	CHECKED -	REVISED -	
PLOT DATE = 12/13/2022	DATE -	REVISED -	

EXISTING DECK CROSS SECTION UNIT A
SN: 016-2457

SCALE: | SHEET OF SHEETS | STA. TO STA.

FAP RTE.	SECTION	COUNTY	TOTAL SHEETS	SHEET NO.
372	FAP 372 22 VARIOUS BS	COOK	138	121

CONTRACT NO. 62U38

ILLINOIS | FED. AID PROJECT

FOR INFORMATION ONLY

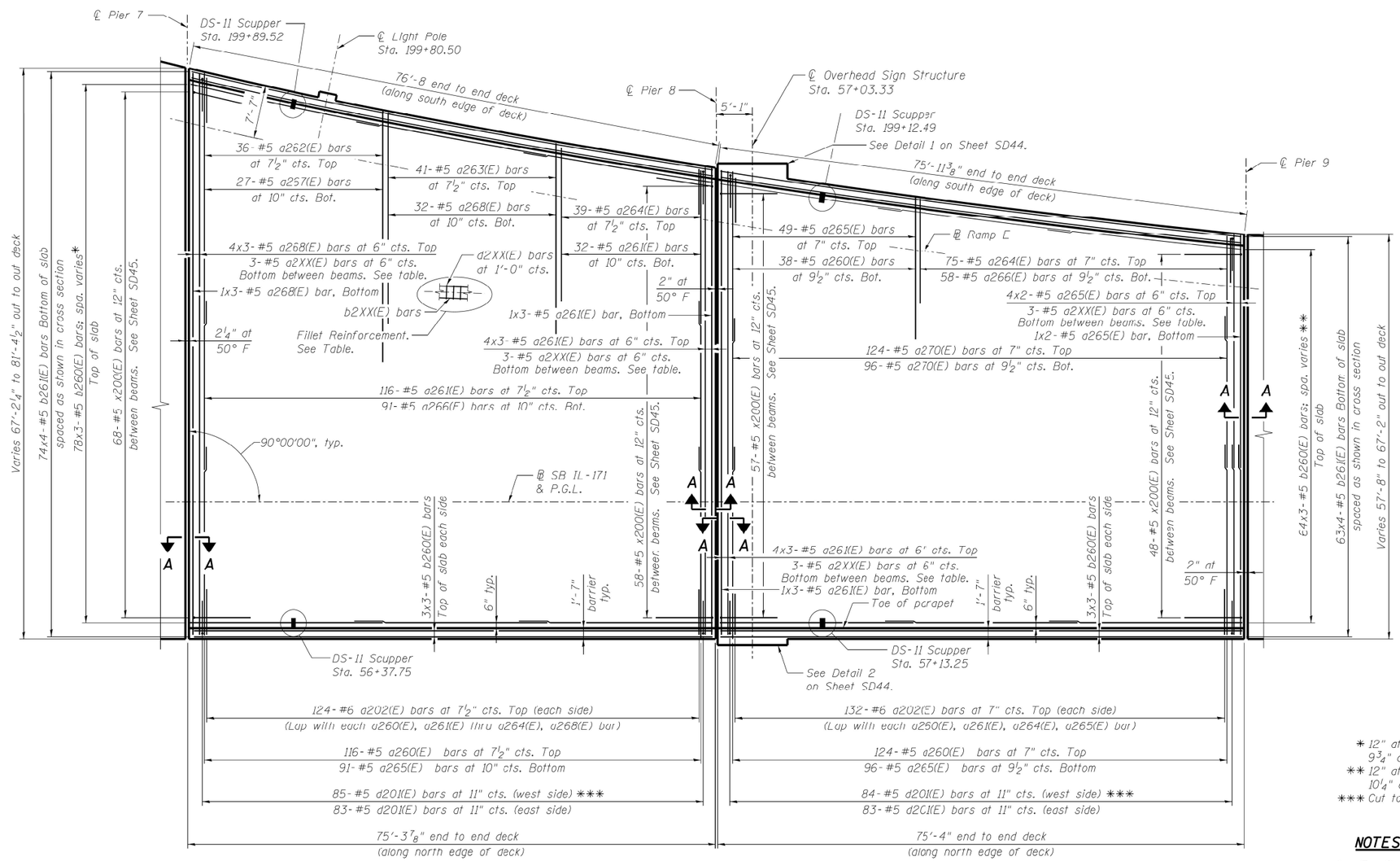

PLAN - SPANS 4 & 5

MINIMUM BAR LAP

(Slab and Parapet)
#4 bar = 2'-7"
#5 bar = 3'-3"
#6 bar = 3'-10"

* 12" at Pier 7
9 3/4" at Pier 8
** 12" at Pier 8
10 1/4" at Pier 9
*** Cut to fit in field

BAR a2XX(E) DATA TABLE

Span	Pier	Bay	Bar
4	7	R1-R6	a207(E)
4	7	R6-R7	a285(E)
4	7	R7-C6	a286(E)
4	8	R1-R6	a287(E)
4	8	R6-R7	a285(E)
4	8	R7-C6	a286(E)

Span	Pier	Bay	Bar
5	8	R1-R4	a229(E)
5	8	R4-C6	a286(E)
5	9	R1-R4	a289(E)
5	9	R4-C6	a286(E)

FILLET REINFORCEMENT DATA TABLE

Girder	Start Sta.	End Sta.	b2XX(E) bars	d2XX(E) bars
R1	56+33.33	56+72.64	2x2-#4 b217(E)	41-#4 d203(E)
R5	56+53.48	56+73.47	2-#4 b217(E)	21-#4 d203(E)

For Fillet Reinforcement detail, see Sheet SD55.

NOTES:

1. For Superstructure Details, Section A-A, and Bar Bends, see Sheet SD45.
2. For Bill of Material, see Sheet SD46.
3. Bars indicated thus 20 x 3-#5 etc. indicates 20 lines of bars with 3 lengths per line.
4. See Sheet SD44 for Sign Structure support details.
5. Dimensions are based on a Rolled Rail Strip Seal Joint. If the Contractor elects to use the Welded Rail Strip Seal Joint, deck dimensions may require adjustments to satisfy the details on Sheet SD49.

MODEL: Default
FILE NAME: pw:\\ildot-pw.bentley.com:PWIDOT\Documents\IDOT Offices\District 1\Projects\D104323\CADData\Design\D104323-h-Plan.dgn

USER NAME = Ivan.Diaz	DESIGNED -	REVISED -	STATE OF ILLINOIS DEPARTMENT OF TRANSPORTATION
	DRAWN -	REVISED -	
PLOT SCALE = 100.0000 ' / in.	CHECKED -	REVISED -	
PLOT DATE = 12/13/2022	DATE -	REVISED -	

EXISTING DECK PLAN UNIT C SPANS 4 & 5
SN: 016-2457

SCALE: SHEET OF SHEETS STA. TO STA.

FAP RTE.	SECTION	COUNTY	TOTAL SHEETS	SHEET NO.
372	FAP 372 22 VARIOUS BS	COOK	138	122

CONTRACT NO. 62U38
ILLINOIS FED. AID PROJECT

FOR INFORMATION ONLY

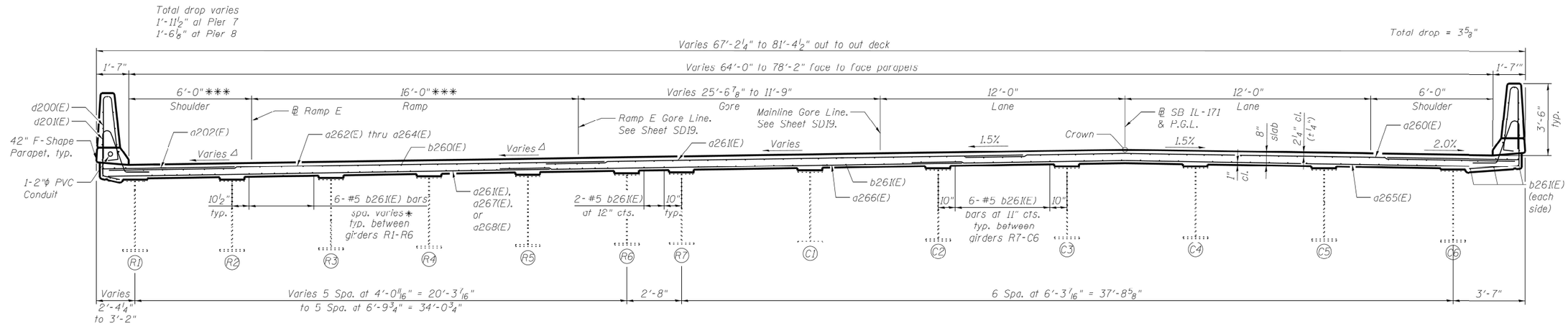

DECK CROSS SECTION - SPAN 4

(Looking Upstation, North)

*12" at Pier 7
5½" at Pier 8

*** Measured perpendicular to ℄ Ramp E

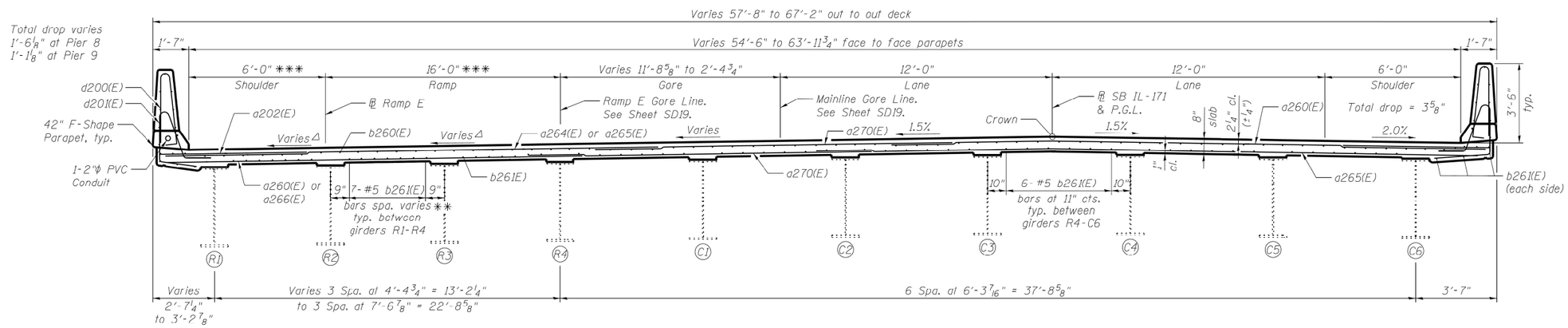

DECK CROSS SECTION - SPAN 5

(Looking Upstation, North)

**12" at Pier 8
5¾" at Pier 9

Δ See S.E. Data Table on Sheet SD30.

NOTES:

1. For Superstructure Details and Bar Bends, see Sheet SD45.
2. For Bill of Material, see Sheet SD46.
3. Barrier widths are measured perpendicular from the edge of deck. Overhang widths are measured perpendicular from the fascia girders. Girder spacings and all remaining deck dimensions are measured perpendicular to the baseline of SB IL-171 unless noted otherwise.

MINIMUM BAR LAP

(Slab and Parapet)
#5 bar = 3'-3"
#6 bar = 3'-10"

MODEL: Default
FILE NAME: pw:\\ildot-pw.bentley.com:PWIDOT\Documents\IDOT Offices\District 1\Projects\D104323\CADData\Design\D104323-sht-4an.dgn

USER NAME = Ivan.Diaz	DESIGNED -	REVISED -	STATE OF ILLINOIS DEPARTMENT OF TRANSPORTATION	EXISTING CROSS SECTION UNIT C SPANS 4 & 5 SN: 016-2457	FAP RTE.	SECTION	COUNTY	TOTAL SHEETS / SHEET NO.
	DRAWN -	REVISED -			372	FAP 372 22 VARIOUS BS	COOK	138 / 123
PLOT SCALE = 100.0000 ' / in.	CHECKED -	REVISED -					CONTRACT NO. 62U38	
PLOT DATE = 12/13/2022	DATE -	REVISED -		SCALE: SHEET OF SHEETS STA. TO STA.		ILLINOIS	FED. AID PROJECT	

FOR INFORMATION ONLY

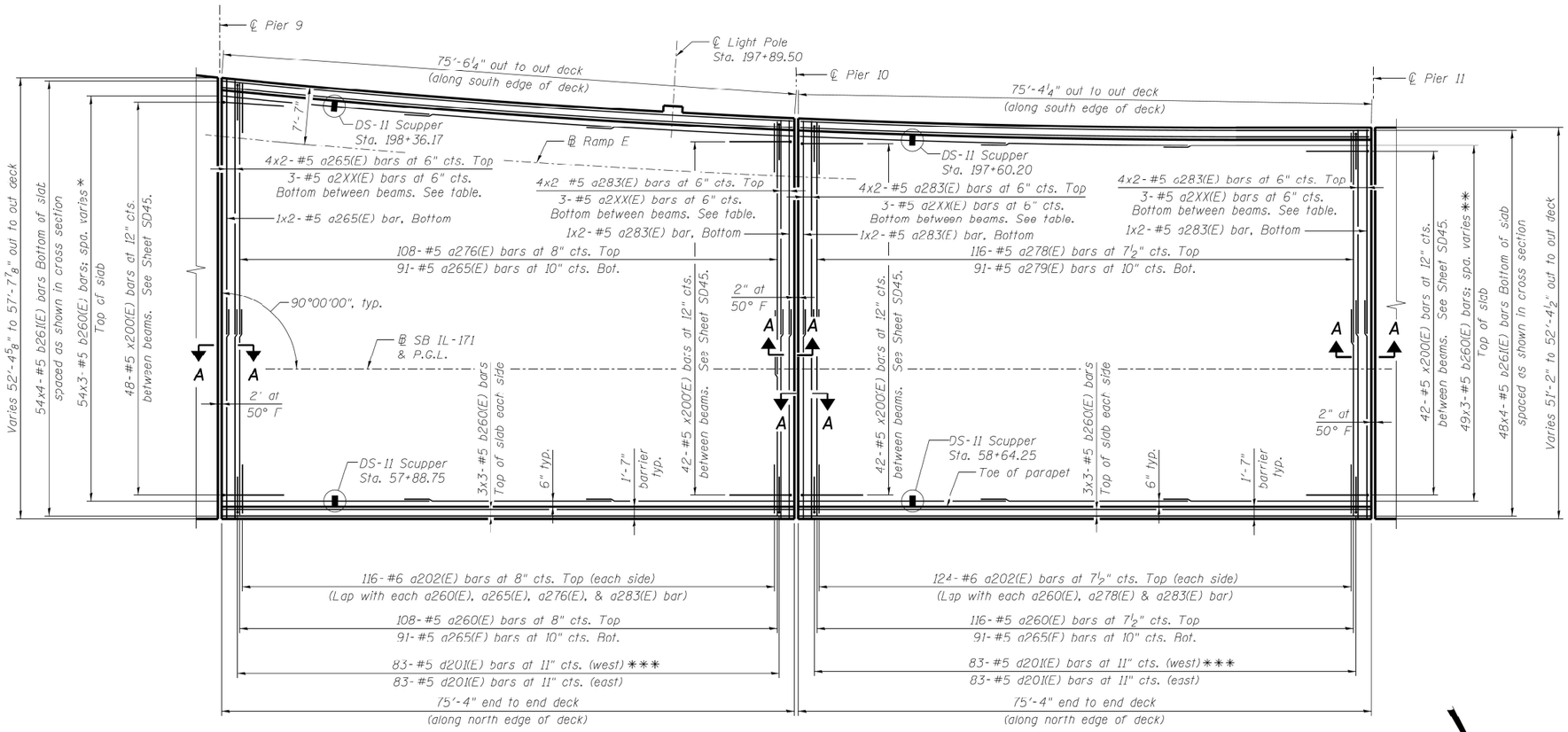

*12" at Pier 9
11" at Pier 10
**12" at Pier 10
11¾" Pier 11
***Cut to fit in field

PLAN - SPANS 6 & 7

MINIMUM BAR LAP

(Slab and Parapet)
#5 bar = 3'-3"
#6 bar = 3'-10"

BAR a2XX(E) DATA TABLE

Span	Pier	Bay	Bar
6	9	R1-C6	a286(E)
6	10	R1-C1	a289(E)
6	10	C1-C6	a286(E)
7	10	R1-C1	a207(E)
7	10	C1-C6	a286(E)
7	11	R1-C6	a286(F)

NOTES:

1. For Superstructure Details, Section A-A, and Bar Bends, see Sheet SD45.
2. For Bill of Material, see Sheet SD46.
3. Bars indicated thus 20 x 3-#5 etc. indicates 20 lines of bars with 3 lengths per line.
4. Dimensions are based on a Rolled Rail Strip Seal Joint. If the Contractor elects to use the Welded Rail Strip Seal Joint, deck dimensions may require adjustments to satisfy the details on Sheet SD49.

MODEL: Default
FILE NAME: pw:\\ildot-pw.bentley.com:PWIDOT\Documents\IDOT Offices\District 1\Projects\D104323\CADData\Design\D104323-ln-sdn.dgn

USER NAME = Ivan.Diaz	DESIGNED -	REVISED -	STATE OF ILLINOIS DEPARTMENT OF TRANSPORTATION
	DRAWN -	REVISED -	
PLOT SCALE = 100.0000 ' / in.	CHECKED -	REVISED -	
PLOT DATE = 12/13/2022	DATE -	REVISED -	

EXISTING DECK PLAN UNIT C SPANS 6 & 7
SN: 016-2457

SCALE: | SHEET OF SHEETS | STA. TO STA.

FAP RTE.	SECTION	COUNTY	TOTAL SHEETS	SHEET NO.
372	FAP 372 22 VARIOUS BS	COOK	138	124
		CONTRACT NO. 62U38		
	ILLINOIS	FED. AID PROJECT		

FOR INFORMATION ONLY

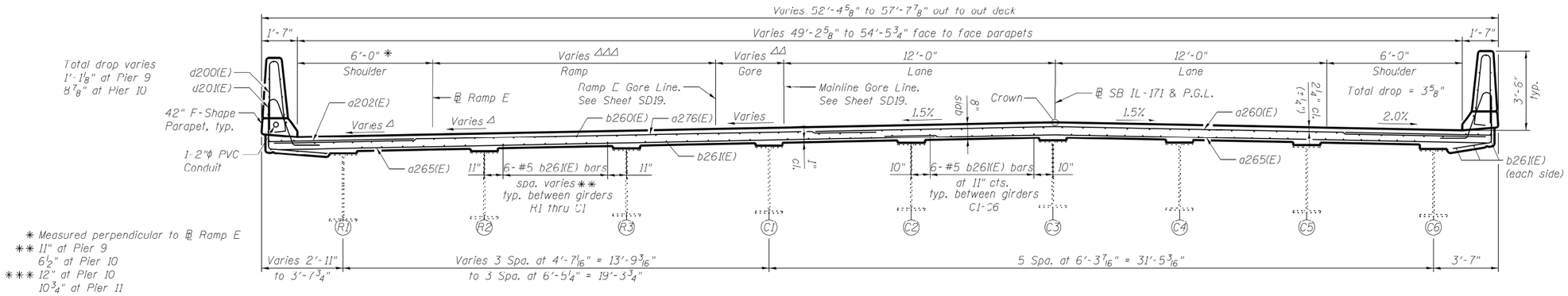

DECK CROSS SECTION SPAN 6

(Looking Upstation, North)

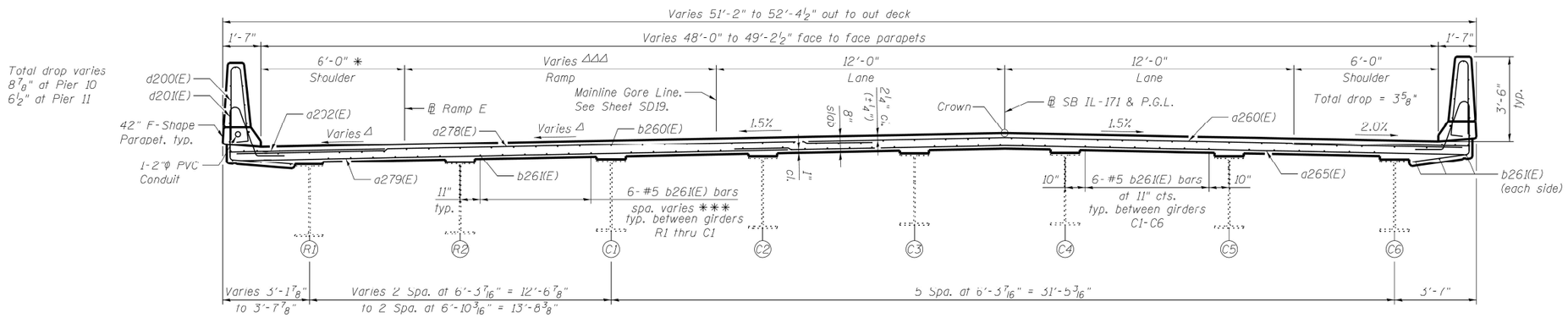

DECK CROSS SECTION SPAN 7

(Looking Upstation, North)

△ See S.E. Data Table on Sheet SD30.
△△ Varies from 2'-4 1/2" at Sta. 57+73.75 to 0'-0" at Sta. 58+01.46 (℄ IL-171)
△△△ 16'-0" from Pier 9 to Sta. 58+01.46 (℄ IL-171)
Varies from Sta. 58+01.46 to Sta. 59+17.63 (℄ IL-171)
12'-0" from Sta. 59+17.63 (℄ IL-171) to Pier 11.

MINIMUM BAR LAP

(Slab and Parapet)
#5 bar = 3'-3"
#6 bar = 3'-10"

NOTES:

1. For Superstructure Details and Bar Bends, see Sheet SD45.
2. For Bill of Material, see Sheet SD46.
3. Barrier widths are measured perpendicular from the edge of deck. Overhang widths are measured perpendicular from the fascia girders. Girder spacings and all remaining deck dimensions are measured perpendicular to the baseline of SB IL-171 unless noted otherwise.

MODEL: Default
FILE NAME: pw:\\ildot-pw.bentley.com:PWIDOT\Documents\IDOT Offices\District 1\Project\D104323\CADData\Design\D104323-sht-s4sn.dgn

USER NAME = Ivan.Diaz	DESIGNED -	REVISED -	STATE OF ILLINOIS DEPARTMENT OF TRANSPORTATION
	DRAWN -	REVISED -	
PLOT SCALE = 100.0000 ' / in.	CHECKED -	REVISED -	
PLOT DATE = 12/13/2022	DATE -	REVISED -	

EXISTING DECK CROSS SECTION UNIT C SPANS 6 & 7
SN: 016-2457

SCALE: | SHEET OF SHEETS | STA. TO STA.

FAP RTE.	SECTION	COUNTY	TOTAL SHEETS	SHEET NO.
372	FAP 372 22 VARIOUS BS	COOK	138	125
		CONTRACT NO. 62U38		
		ILLINOIS	FED. AID PROJECT	

FOR INFORMATION ONLY

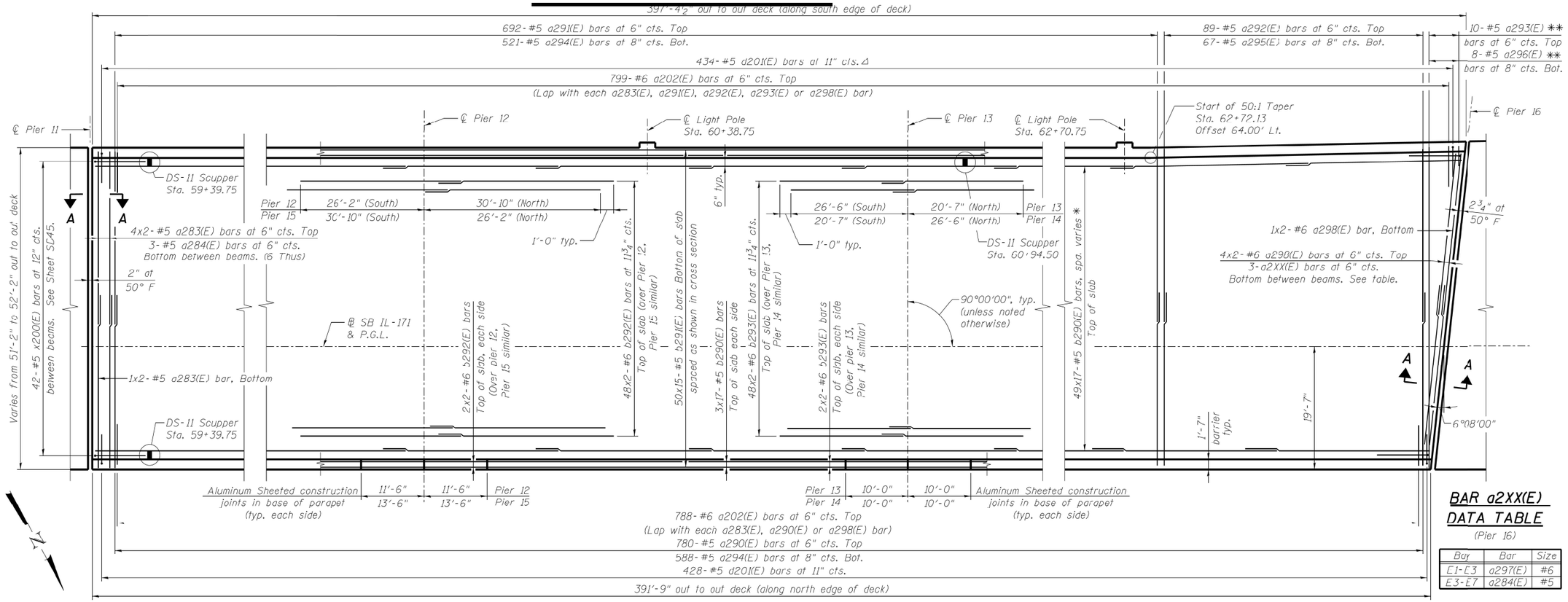

PLAN - SPANS 8 THRU 12

✱ 11¾" at Piers 11-15
12" at Pier 16
✱✱ See cut diagram on sheet SD45.

Δ Cut to fit in field

BAR a2XX(E) DATA TABLE

(Pier 16)

Bay	Bar	Size
E1-E3	a297(E)	#6
E3-E7	a284(E)	#5

MINIMUM BAR LAP

(Slab and Parapet)
#5 bar - 3'-3"
#6 bar = 3'-10"

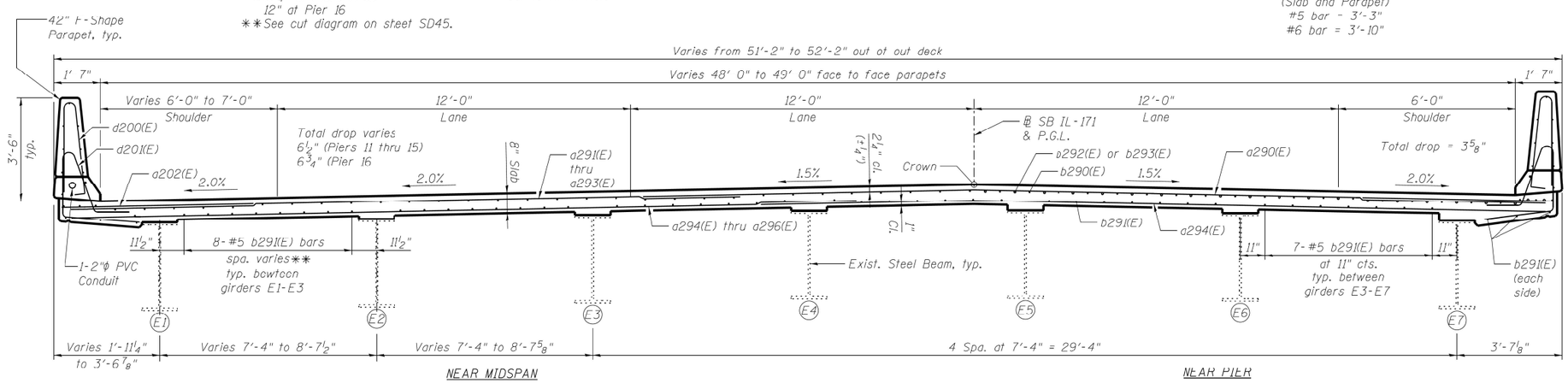

✱✱ 11½" at Pier 16, 9¼" at Piers 11-15

DECK CROSS SECTION - SPANS 8 THRU 12

(Looking Upstation, North)

NOTES:

1. For Superstructure Details, Section A A, and Bar Bends, see Sheet SD45.
2. For Bill of Materia, see Sheet SD46.
3. Bars indicated thus 20 x 3 #5 etc. indicates 20 lines of bars with 3 lengths per line.
4. See Sheet SD45 for Pour Sequence.
5. Barrier widths are measured perpendicular from the edge of deck. Overhang widths are measured perpendicular from the fascia girders. Girder spacings are measured perpendicular from the east girder to the west girder at the centerline of bearing. All remaining deck dimensions are measured perpendicular to the baseline shown unless noted otherwise.
6. Dimensions are based on a Rolled Rail Strip Seal Joint. If the Contractor elects to use the Welded Rail Strip Seal Joint, deck dimensions may require adjustments to satisfy the details on Sheet SD49.

MODEL: Default
FILE NAME: pw:\\ildot-pw.bentley.com:PWIDOT\Documents\IDOT Offices\District 1\Projects\D104323\CADData\Design\D104323-ifc-bhn.dgn

USER NAME = Ivan.Diaz	DESIGNED -	REVISED -	STATE OF ILLINOIS DEPARTMENT OF TRANSPORTATION
	DRAWN -	REVISED -	
PLOT SCALE = 100.0000 ' / in.	CHECKED -	REVISED -	
PLOT DATE = 12/13/2022	DATE -	REVISED -	

EXISTING DECK PLAN & CROSS SECTION UNIT E
SN: 016-2457

SCALE: SHEET OF SHEETS STA. TO STA.

FAP RTE.	SECTION	COUNTY	TOTAL SHEETS	SHEET NO.
372	FAP 372 22 VARIOUS BS	COOK	138	126
		CONTRACT NO. 62U38		
	ILLINOIS	FED. AID PROJECT		

FOR INFORMATION ONLY

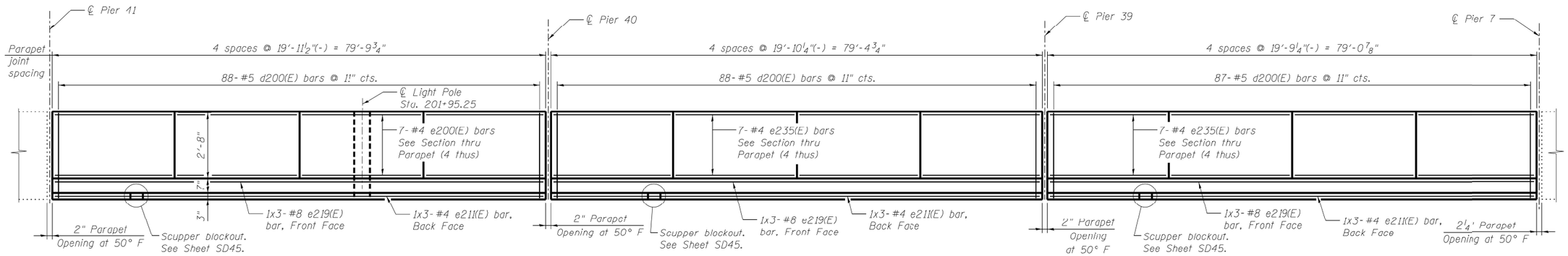

INSIDE ELEVATION OF RAMP E WEST PARAPET

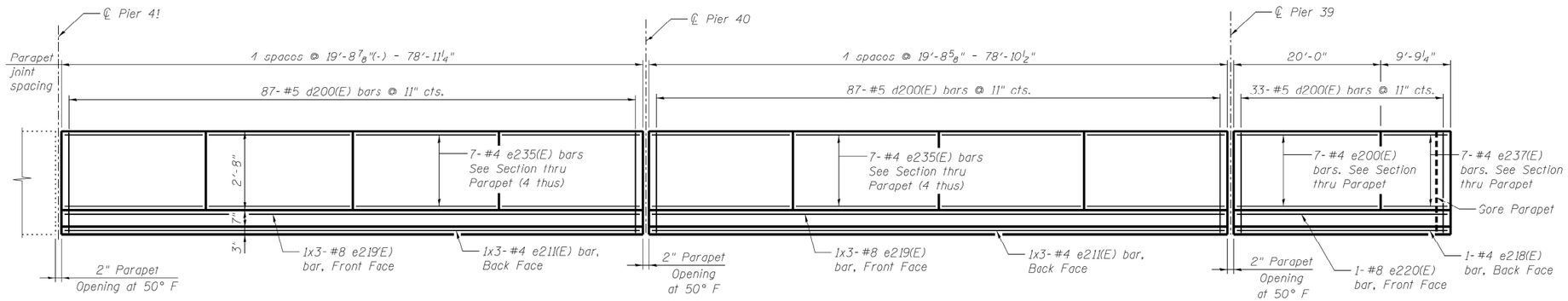

INSIDE ELEVATION OF RAMP E EAST PARAPET

(Reflected View Shown)

MINIMUM BAR LAP

(Parapet)
#4 bar = 2'-0"
#8 bar = 5'-2"

NOTES:

1. All dimensions shown are along the toe of the parapet (gutterline).
2. Bars indicated thus 1x3-#8 etc. indicates 1 line of bars with 3 lengths per line.
3. See Sheet SD43 for cross section thru parapet.
4. Span 3E Ramp E bars included in Unit A Bill of Material.

MODEL: Default
FILE NAME: pw:\\ildot-pw.bentley.com:PWIDOT\Documents\IDOT Offices\District 1\Projects\D104323\CADData\Design\D104323-ifc-abn.dgn

USER NAME = Ivan.Diaz	DESIGNED -	REVISED -	
	DRAWN -	REVISED -	
PLOT SCALE = 100.0000 ' / in.	CHECKED -	REVISED -	
PLOT DATE = 12/13/2022	DATE -	REVISED -	

STATE OF ILLINOIS
DEPARTMENT OF TRANSPORTATION

EXISTING PARAPET ELEVATION UNIT A RAMP E
SN: 016-2457

SCALE: | SHEET OF SHEETS | STA. TO STA.

FAP RTE.	SECTION	COUNTY	TOTAL SHEETS	SHEET NO.
372	FAP 372 22 VARIOUS BS	COOK	138	127
		CONTRACT NO. 62U38		
		ILLINOIS FED. AID PROJECT		

FOR INFORMATION ONLY

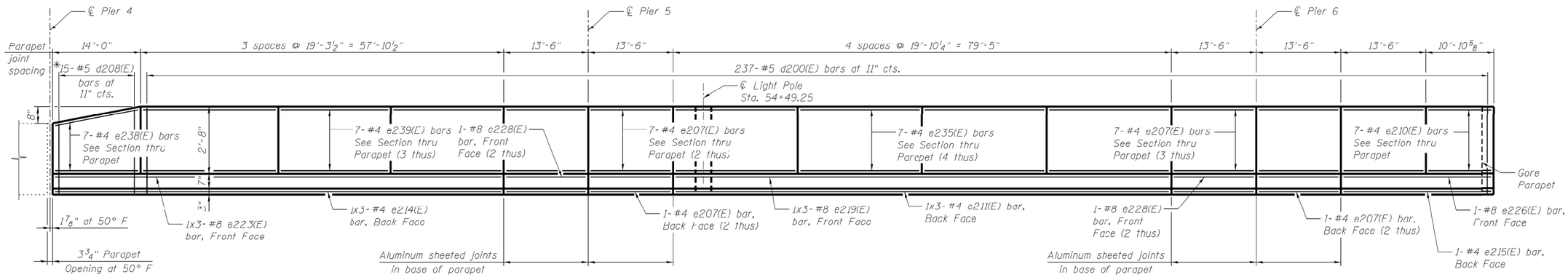

INSIDE ELEVATION OF SB IL-171 WEST PARAPET

* Cut and bend in field to fit. Front (inside) leg shall terminate with 5⅞" long 90° hook similar to d200(E) bars.

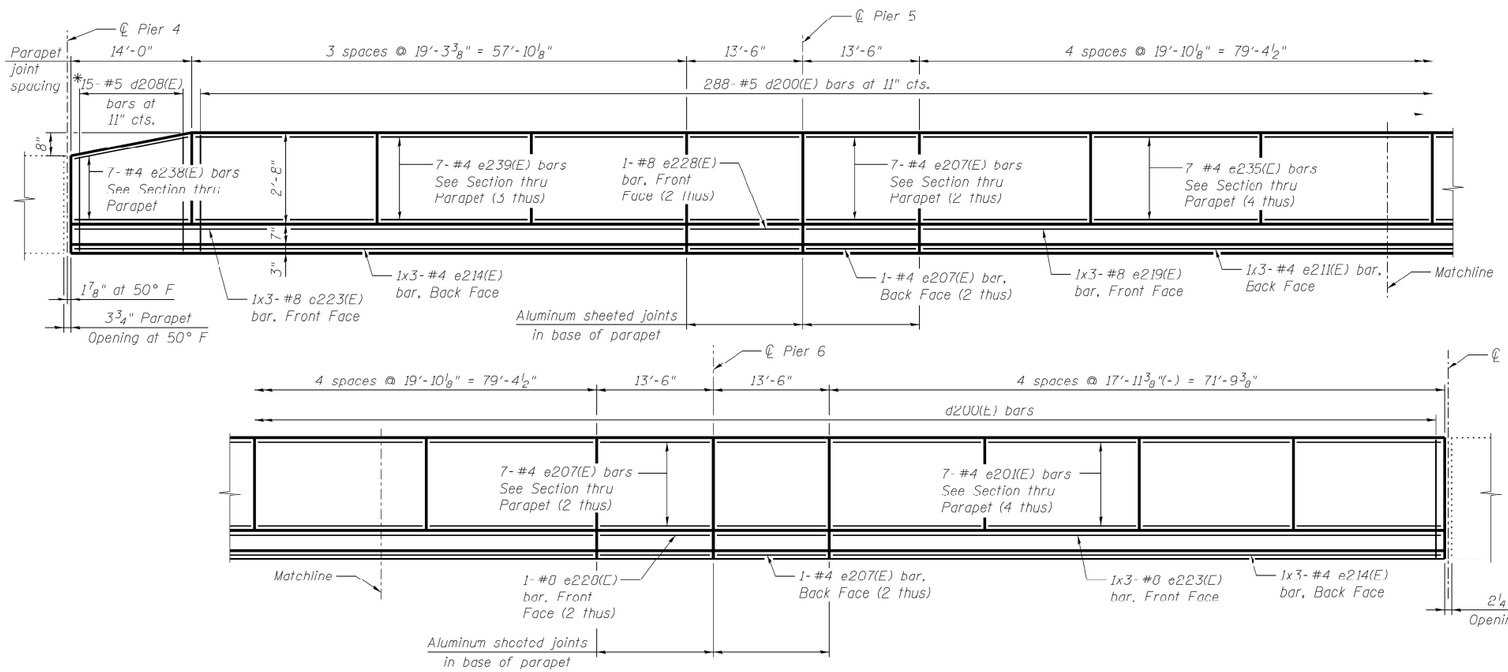

INSIDE ELEVATION OF SB IL-171 EAST PARAPET

(Reflected View Shown)

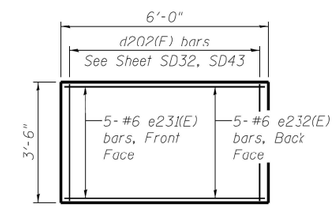

INSIDE ELEVATION OF GORE PARAPET

MINIMUM LAP

(Parapet)
#4 bar = 2'-0"
#8 bar = 5'-2"

NOTES:

1. All dimensions shown are along the toe of the parapet (gutterline).
2. Bars indicated thus 1x3-#8 etc. indicates 1 line of bars with 3 lengths per line.
3. See Sheet SD43 for cross section thru parapet.

MODEL: Default
FILE NAME: pw:\\ildot-pw.bentley.com:PWIDOT\Documents\IDOT Offices\District 1\Projects\D104323\CADData\Design\D104323-h-sBan.dgn

USER NAME = Ivan.Diaz	DESIGNED -	REVISED -	STATE OF ILLINOIS DEPARTMENT OF TRANSPORTATION
	DRAWN -	REVISED -	
PLOT SCALE = 100.0000 ' / in.	CHECKED -	REVISED -	
PLOT DATE = 12/13/2022	DATE -	REVISED -	

EXISTING PARAPET ELEVATION UNIT A
SN: 016-2457

SCALE: | SHEET OF SHEETS | STA. TO STA.

FAP RTE.	SECTION	COUNTY	TOTAL SHEETS	SHEET NO.
372	FAP 372 22 VARIOUS BS	COOK	138	128
		CONTRACT NO. 62U38		
		ILLINOIS FED. AID PROJECT		

FOR INFORMATION ONLY

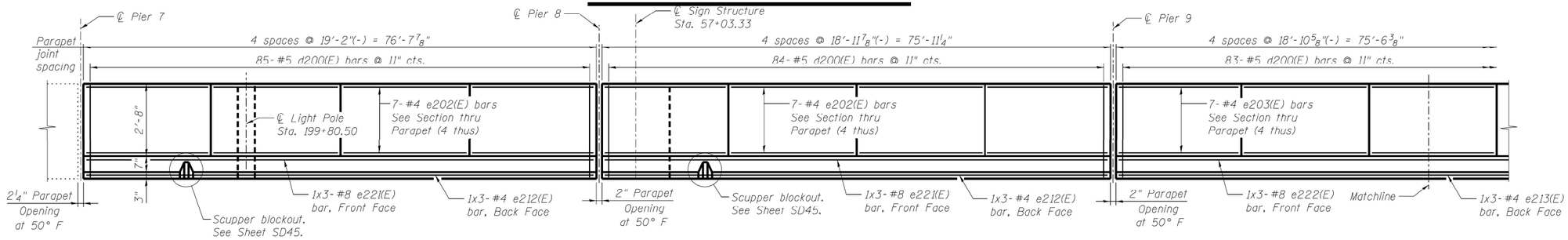

NOTES:

1. All dimensions shown are along the toe of the parapet (gutterline).
2. Bars indicated thus 1x3-#8 etc. indicates 1 line of bars with 3 lengths per line.
3. See Sheet SD43 for cross section thru parapet.

MINIMUM BAR LAP

(Parapet)
#4 bar = 2'-0"
#8 bar = 5'-2"

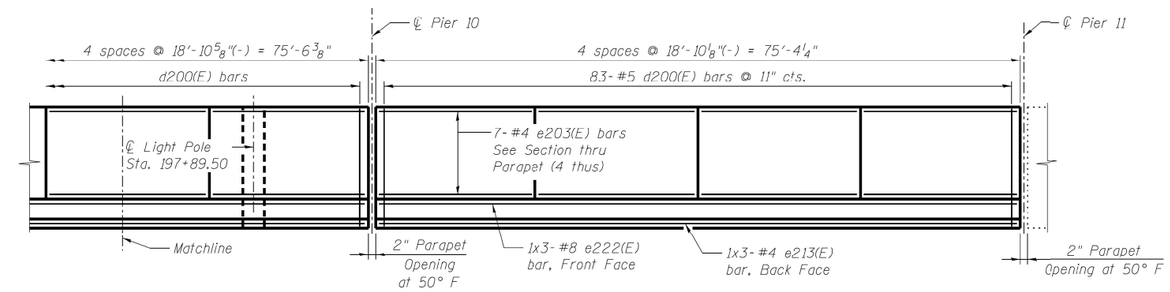

INSIDE ELEVATION OF WEST PARAPET

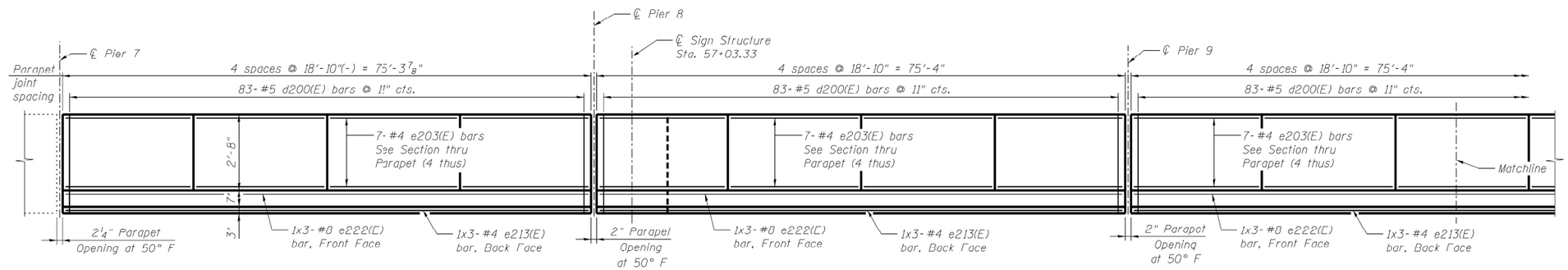

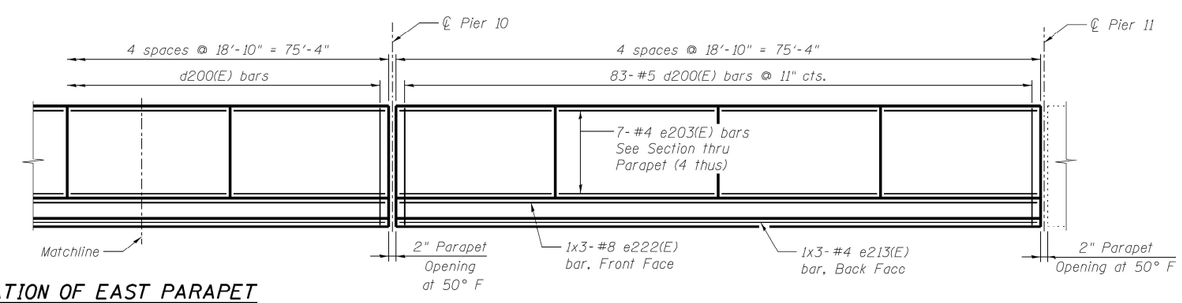

INSIDE ELEVATION OF EAST PARAPET

(Reflected View Shown)

MODEL: Default
FILE NAME: pw:\\ildot-pw.bentley.com:PWIDOT\Documents\IDOT Offices\District 1\Projects\D104323\CADData\Design\D104323-ths-4bn.dgn

USER NAME = Ivan.Diaz	DESIGNED -	REVISED -	
	DRAWN -	REVISED -	
PLOT SCALE = 100.0000 ' / in.	CHECKED -	REVISED -	
PLOT DATE = 12/13/2022	DATE -	REVISED -	

STATE OF ILLINOIS
DEPARTMENT OF TRANSPORTATION

EXISTING PARAPET ELEVATION UNIT C
SN: 016-2457

SCALE: | SHEET OF SHEETS | STA. TO STA.

FAP RTE.	SECTION	COUNTY	TOTAL SHEETS	SHEET NO.
372	FAP 372 22 VARIOUS BS	COOK	138	129
		CONTRACT NO. 62U38		
		ILLINOIS FED. AID PROJECT		

FOR INFORMATION ONLY

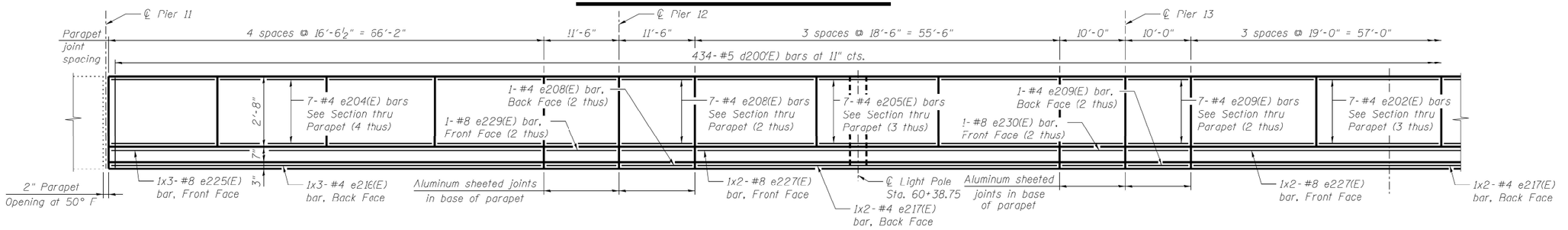

MINIMUM BAR LAP

(Parapet)
#4 bar = 2'-0"
#8 bar = 5'-2"

NOTES:

1. All dimensions shown are along the toe of the parapet (gutterline).
2. Bars indicated thus 1x3-#8 etc. indicates 1 line of bars with 3 lengths per line.
3. See Sheet SD43 for cross section thru parapet.

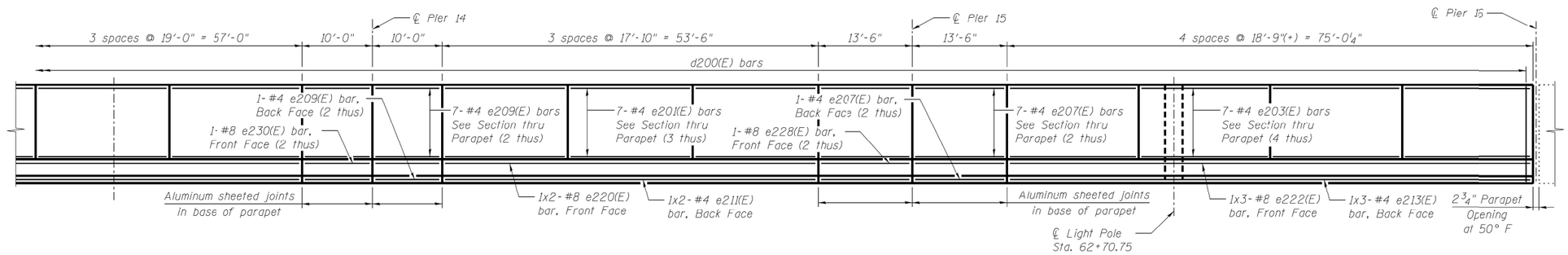

INSIDE ELEVATION OF WEST PARAPET

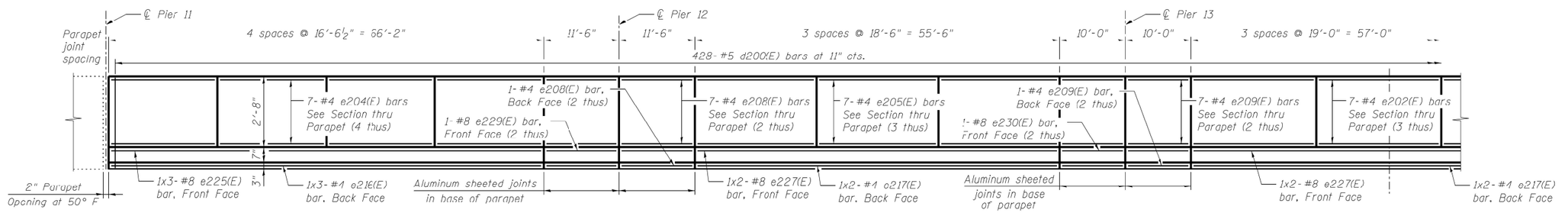

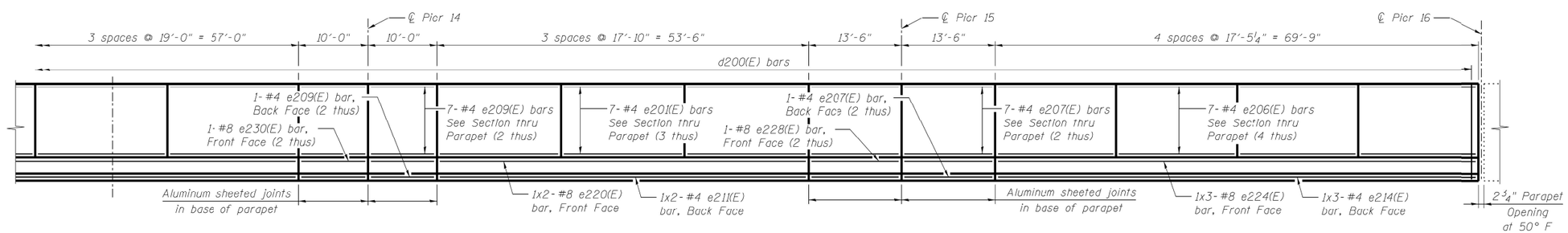

INSIDE ELEVATION OF EAST PARAPET

(Reflected View Shown)

MODEL: Default
FILE NAME: pw:\\ildot-pw.bentley.com:PWIDOT\Documents\IDOT Offices\District 1\Projects\D104323\CADData\Design\D104323-sht-3dn.dgn

USER NAME = Ivan.Diaz	DESIGNED -	REVISED -	STATE OF ILLINOIS DEPARTMENT OF TRANSPORTATION
	DRAWN -	REVISED -	
PLOT SCALE = 100.0000 ' / in.	CHECKED -	REVISED -	
PLOT DATE = 12/13/2022	DATE -	REVISED -	

EXISTING PARAPET ELEVATION UNIT E
SN: 016-2457

SCALE: | SHEET OF SHEETS | STA. TO STA.

FAP RTE.	SECTION	COUNTY	TOTAL SHEETS	SHEET NO.
372	FAP 372 22 VARIOUS BS	COOK	138	130
		CONTRACT NO. 62U38		
		ILLINOIS	FED. AID PROJECT	

FOR INFORMATION ONLY

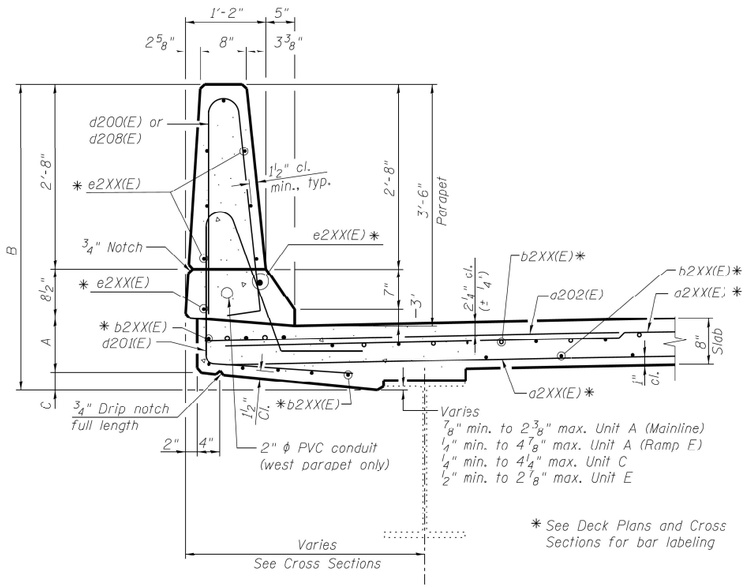

SECTION THRU PARAPET

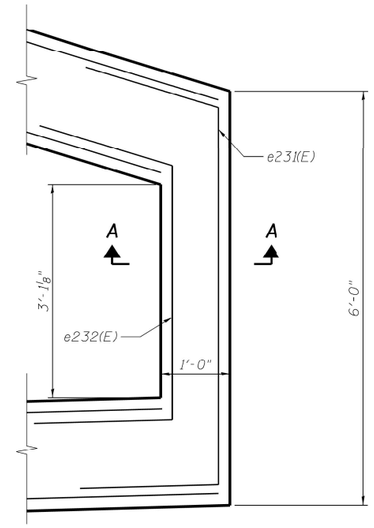

DETAIL 3

(See Sheet SD31)

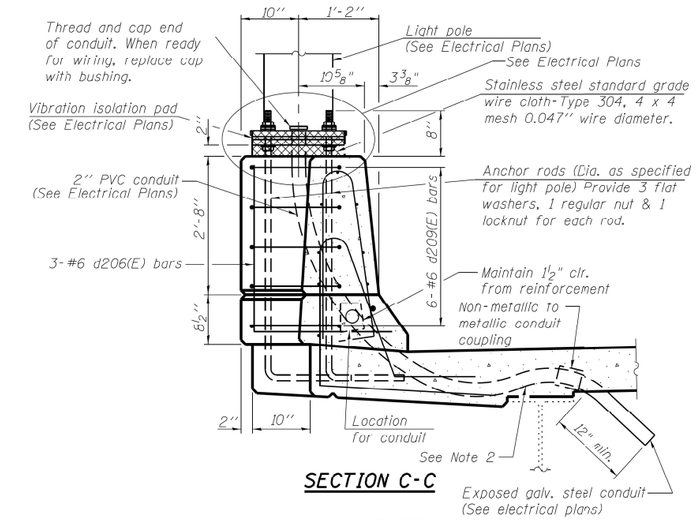

SECTION C-C

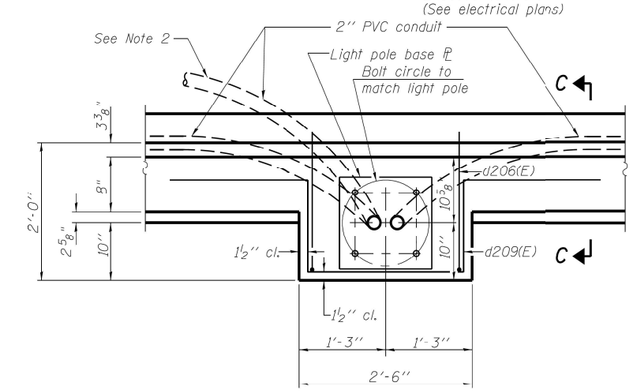

PLAN

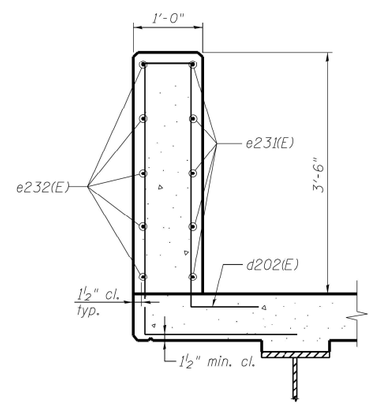

SECTION A-A

Location	A	B	C
Typical, unless noted below	9 1/2"	4'-7"	5"
Ramp E West Parapet Pier 40 to Pier 39	10"	4'-7 1/2"	5"
Ramp E West Parapet Pier 39 to Pier 7	12"	4'-9 1/2"	5"
Ramp E East Parapet Pier 41 to Pier 40	12"	4'-9 1/2"	5"
Ramp E East Parapet Pier 40 to Pier 39	11"	4'-8 1/2"	5"
Unit C West Parapet Pier 7 to Pier 8	11"	4'-8 1/2"	5"
Unit A & Unit E	9 1/2"	4'-6"	4"

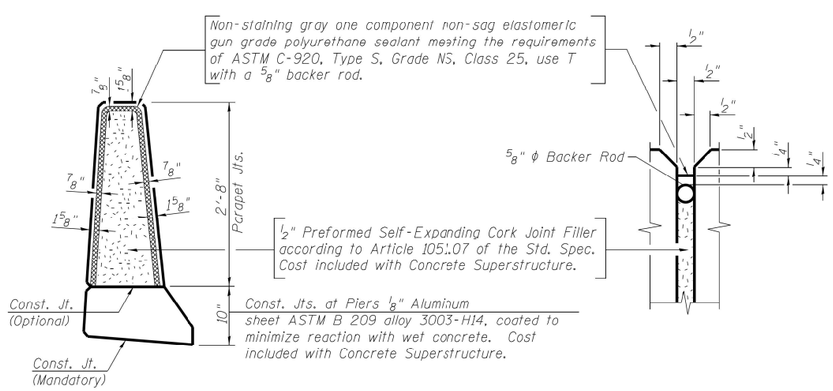

PARAPET JOINT DETAILS

NOTES:

1. Cost of anchor rods is included with "Concrete Superstructure".
2. Conduit upstation from light pole at Sta. 54+49.25 is attached to bottom of deck. See Electrical Plans.

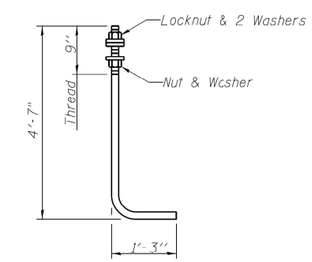

ANCHOR ROD

Diameter as specified for light poles.
(ASTM F 1554 Grade 105)
Full length hot dipped galvanized.

MODEL: Default
FILE NAME: pw:\\ildot-pw.bentley.com:PWIDOT\Documents\IDOT Offices\District 1\Projects\D104323\CADData\Design\D104323-sht-4bn.dgn

USER NAME = Ivan.Diaz	DESIGNED -	REVISED -
	DRAWN -	REVISED -
PLOT SCALE = 100.0000 ' / in.	CHECKED -	REVISED -
PLOT DATE = 12/13/2022	DATE -	REVISED -

STATE OF ILLINOIS
DEPARTMENT OF TRANSPORTATION

EXISTING PARAPET DETAILS
SN: 016-2457

SCALE: | SHEET OF SHEETS | STA. TO STA.

FAP RTE.	SECTION	COUNTY	TOTAL SHEETS	SHEET NO.
372	FAP 372 22 VARIOUS BS	COOK	138	131
		CONTRACT NO. 62U38		
		ILLINOIS FED. AID PROJECT		

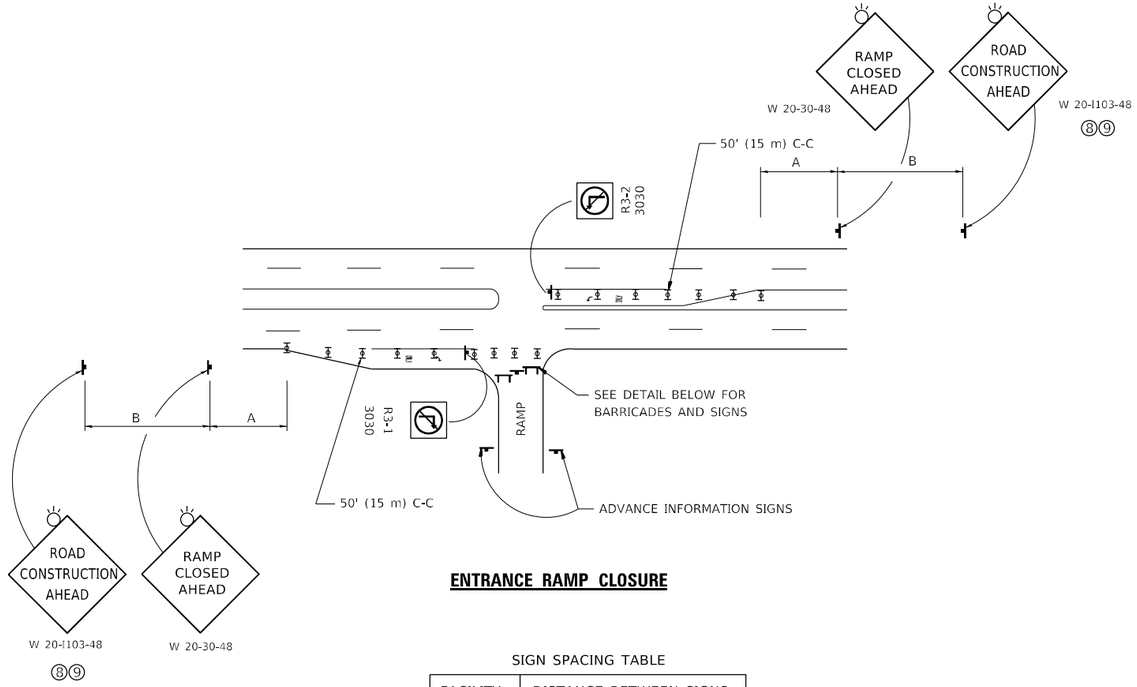

ENTRANCE RAMP CLOSURE

SIGN SPACING TABLE

FACILITY	DISTANCE BETWEEN SIGNS	
	A	B
EXPRESSWAY >24 HOURS	1000' (300 m)	1500' (450 m)
EXPRESSWAY ≤24 HOURS	500' (150 m)	500' (150 m)
ARTERIAL 55 MPH	500' (150 m)	500' (150 m)
ARTERIAL 50-45 MPH	350' (100 m)	350' (100 m)
ARTERIAL <45 MPH	200' (60 m)	200' (60 m)

DISTANCES MAY BE SHORTENED DEPENDING UPON THE PROXIMITY OF ADJACENT RAMPS OR INTERSECTIONS.

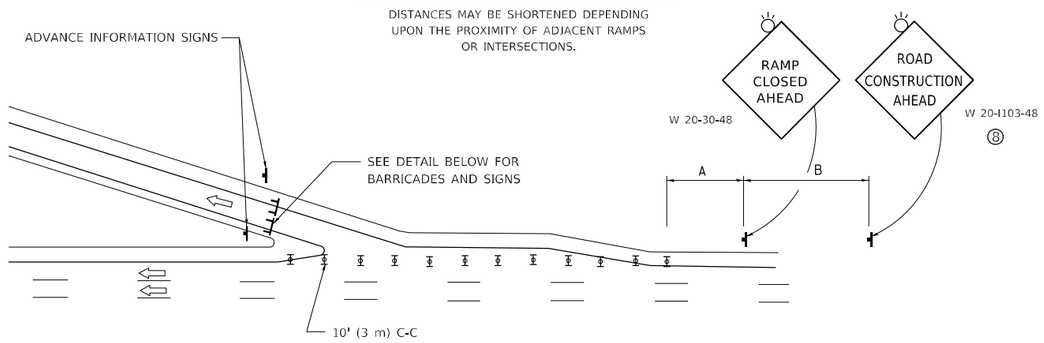

EXIT RAMP CLOSURE

SYMBOLS

TYPE II BARRICADE OR DRUM

TYPE III BARRICADE WITH 2 FLASHING LIGHTS

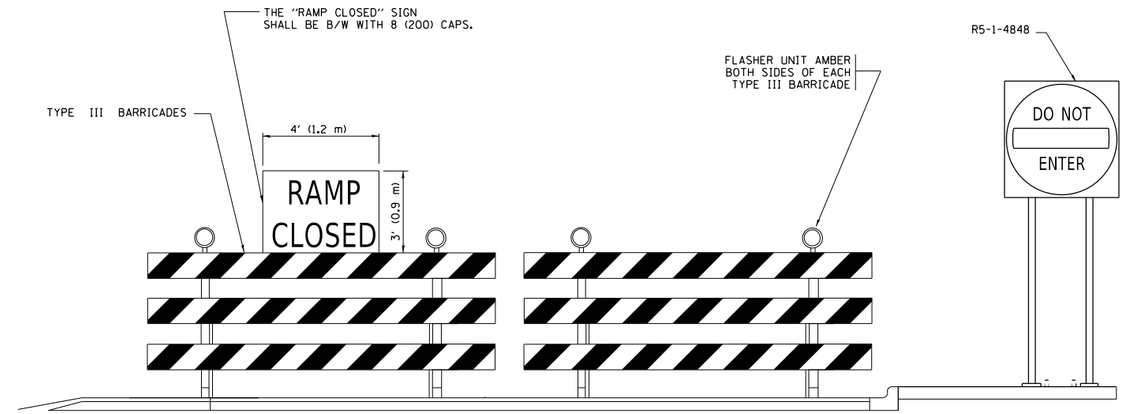

DETAIL FOR REQUIRED BARRICADES & SIGNS

RAMP CLOSURE ADVANCE WARNING SIGN

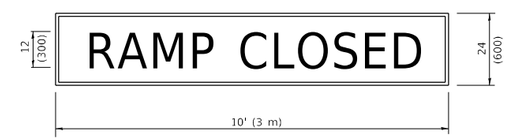

BLACK LEGEND ON ORANGE BACKGROUND MOUNTED DIAGONALLY
E MOD FONT
1 (25) BORDER
THESE SIGNS ARE REQUIRED ON ALL THE EXIT GUIDE SIGNS FOR EXIT RAMPS THAT WILL BE CLOSED FOR MORE THAN FOUR (4) CONSECUTIVE DAYS.

RAMP CLOSURE ADVANCE INFORMATION SIGN

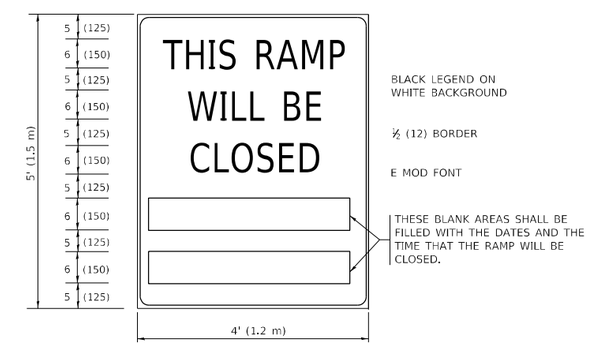

THESE SIGNS ARE REQUIRED ON BOTH SIDES OF THE RAMP, MINIMUM OF 1 WEEK IN ADVANCE OF THE CLOSURE.

THESE SIGNS SHALL BE FABRICATED AND PAID FOR ACCORDING TO THE TEMPORARY INFORMATION SIGNING SPECIAL PROVISION

GENERAL NOTES:

1. CONES MAY BE SUBSTITUTED FOR DRUMS OR TYPE II BARRICADES DURING DAY OPERATIONS. CONES SHALL BE A MINIMUM OF 28 (700) HIGH.
2. VERTICAL BARRICADES SHALL NOT BE USED FOR RAMP CLOSURES.
3. A FLAGGER SHALL BE POSITIONED AT EACH CLOSED RAMP THAT IS OPEN TO CONSTRUCTION VEHICLES, PRECEEDED BY A W20-7 FLAGGER WARNING SIGN.
4. ALL ROUTE MARKERS AND TRAILBLAZER ASSEMBLIES WHICH DIRECT MOTORISTS TO A CLOSED ENTRANCE RAMP SHALL BE COVERED WHEN THE RAMP IS CLOSED FOR MORE THAN FOUR (4) DAYS.
5. THE SIGNING AND BARRICADING WHICH IS REQUIRED BY THIS DETAIL SHALL BE INCLUDED IN THE COST OF TRAFFIC CONTROL AND PROTECTION (EXPRESSWAYS).
6. AUTHORIZATION FROM THE DISTRICT'S BUREAU OF TRAFFIC IS REQUIRED FOR ALL RAMP CLOSURES.
7. THE RAMP CLOSURE ADVANCE INFORMATION SIGNS SHALL BE ERECTED IF THE CLOSURE TIME EXCEEDS TWENTY-FOUR (24) HOURS. ADDITIONAL ADVANCE WARNING SIGNS ON EXIT GUIDE SIGNING WILL BE REQUIRED FOR EXIT RAMP CLOSURES THAT EXCEED FOUR (4) DAYS IN LENGTH
8. ROAD CONSTRUCTION AHEAD SIGNS MAY BE OMITTED WHEN THIS DETAIL IS USED IN CONJUNCTION WITH OTHER TRAFFIC CONTROL THAT ALREADY INCLUDES A ROAD CONSTRUCTION AHEAD SIGN.
9. ARTERIAL ROAD CONSTRUCTION AHEAD SIGNS SHALL BE INSTALLED ON THE LEFT SIDE OF TRAFFIC IF THE MEDIAN IS MORE THAN 10 FT WIDE.

ALL DIMENSIONS ARE IN INCHES (MILLIMETERS) UNLESS OTHERWISE SHOWN.

MODEL: Default
FILE NAME: pw:\\ildot-pw.bentley.com:PWIDOT\Documents\IDOT Offices\District 1\Projects\D104323\CADData\Design\D104SD4.dgn

USER NAME = Ivan.Diaz	DESIGNED - D.W.S.	REVISED - S.P.B._01-07	STATE OF ILLINOIS DEPARTMENT OF TRANSPORTATION
	DRAWN -	REVISED - S.P.B._12-09	
PLOT SCALE = 100.0000 ' / in.	CHECKED -	REVISED - M.D._06-13	
PLOT DATE = 12/13/2022	DATE - 02-83	REVISED - M.D._01-18	

ENTRANCE_AND_EXIT_RAMP CLOSURE_DETAILS

SCALE: NONE | SHEET 1 OF 1 SHEETS | STA. TO STA.

F.A.P. RTE.	SECTION	COUNTY	TOTAL SHEETS	SHEET NO.
372	FAP 372 22 VARIOUS BS	COOK	138	132
	TC-08	CONTRACT NO. 62U38		
		ILLINOIS FED. AID PROJECT		

SINGLE LANE WEAVE

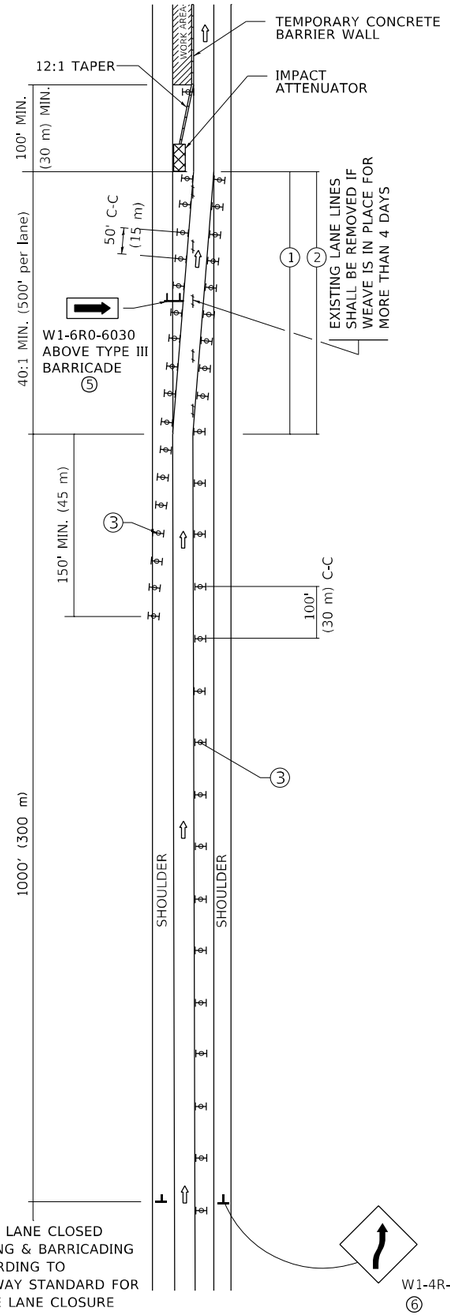

MULTI–LANE WEAVE

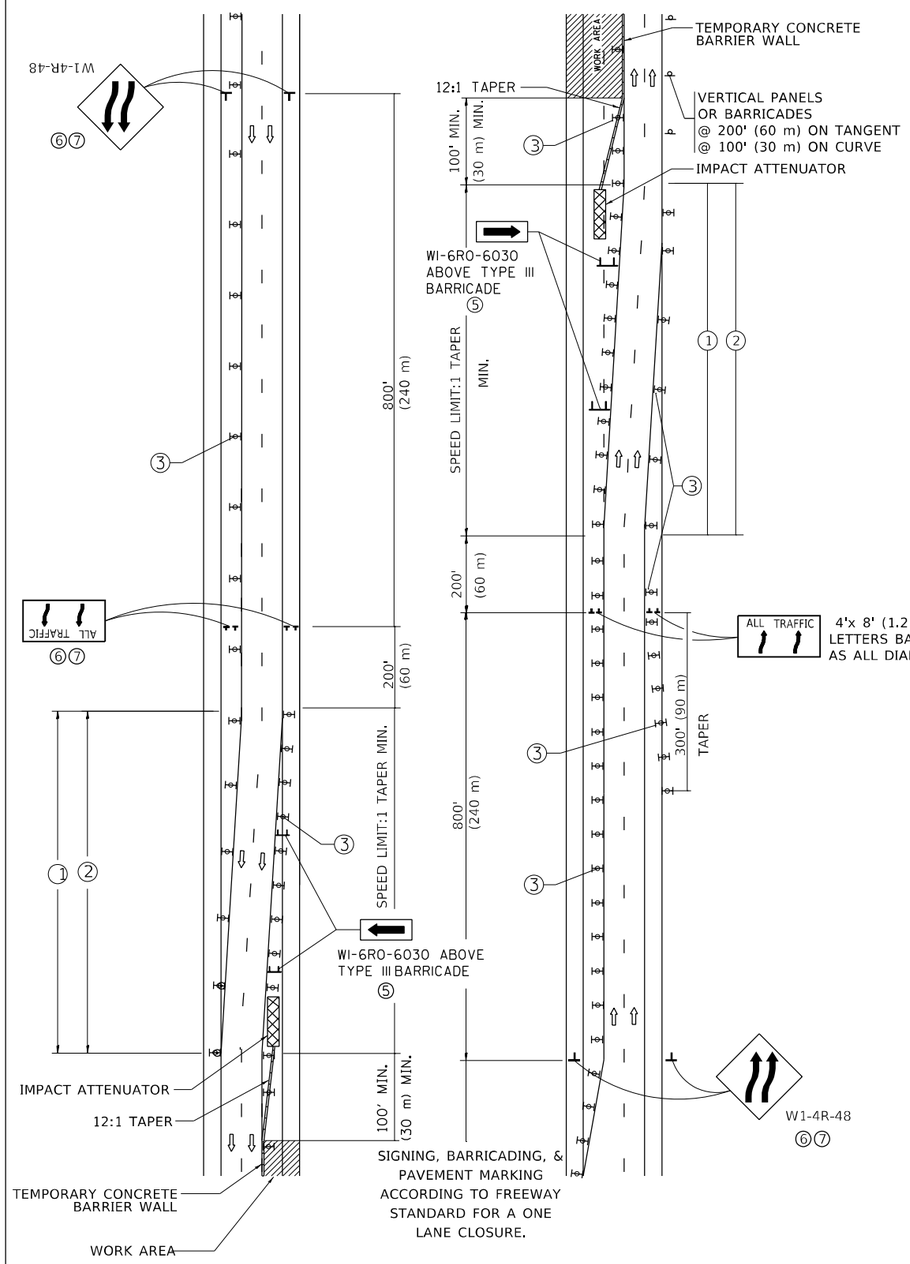

GENERAL NOTES:

1. EXISTING CONFLICTING PAVEMENT MARKING LINES SHALL BE REMOVED. PAVEMENT MARKING REMOVAL SHALL NOT BE REQUIRED FOR SINGLE LANE WEAVES UNDER 4 DAYS IN DURATION.
2. CONTINOUS REFLECTIVE TEMPORARY PAVEMENT MARKING TAPE SHALL BE PLACED THROUGHOUT THE TAPER AND FOR 300' (90 m) ALONG SIDE THE WORK AREA WHERE THE CLOSURE TIME IS GREATER THAN FOURTEEN DAYS. THE LEFT EDGE LINE SHALL BE YELLOW AND THE RIGHT EDGE LINE SHALL BE WHITE. FOR MULTI-LANE WEAVES LANE LINES SHALL BE 5 INCH, 10'-30' (3 m-9 m) SKIP DASH, WHITE.
3. PLASTIC DRUMS WITH STEADY BURN LIGHTS AT 50' (15 m) C-C SPACING IN TAPERS AND 100' (30 m) C-C SPACING IN TANGENTS.
4. ALL SIGNS SHALL BE POST MOUNTED IF THE CLOSURE TIME EXCEEDS FOUR DAYS.
5. TYPE III BARRICADES MAY BE OMMITTED FOR SINGLE-LANE WEAVES UNDER 24-HOURS IN DURATION. W1-6 SIGNS WILL STILL BE REQUIRED. IF THE WIDTH OF OFFSET IS LESS THAN 6' THEN THE TYPE III BARRICADE WITH ATTACHED ARROW SIGN PANEL CAN BE ELIMINATED IN THE TAPER AREAS.
6. WHEN THE LENGTH OF THE SHIFTED SEGMENT (DISTANCE BETWEEN WEAVE POINTS) IS LESS THAN 1500', DOUBLE REVERSE CURVE SIGNS (W24-1) SHOULD BE USED INSTEAD OF THE REVERSE CURVE (W1-4) SIGNS. ARROWS ON THE 4'X8' "ALL TRAFFIC" SIGNS SHALL BE THE SAME SHAPE.
7. THE NUMBER OF ARROWS ON THESE SIGNS SHALL MATCH THE NUMBER OF LANES OPEN TO TRAFFIC.

SYMBOLS

- DIRECTION OF TRAFFIC
- WORK AREA
- SIGN ON PORTABLE OR PERMANENT SUPPORT
- TYPE II BARRICADE OR DRUM WITH MONO-DIRECTIONAL STEADY BURNING LIGHT
- TEMPORARY CONCRETE BARRIER WALL
- IMPACT ATTENUATOR
- W24-1-48

ALL DIMENSIONS ARE IN INCHES (MILLIMETERS) UNLESS OTHERWISE SHOWN

MODEL: Default
FILE NAME: pw:\\ildot-pw.bentley.com:PWIDOT\Documents\IDOT Offices\District 1\Projects\D104323\CADData\Design\TCHSfd.dgn

USER NAME = Ivan.Diaz	DESIGNED - D.W.S.	REVISED - J.A.F. 02-06	STATE OF ILLINOIS DEPARTMENT OF TRANSPORTATION
	DRAWN -	REVISED - S.P.B. 01-07	
PLOT SCALE = 100.0000 ' / in.	CHECKED -	REVISED - S.P.B. 12-09	
PLOT DATE = 12/13/2022	DATE - 02-87	REVISED - M.D. 06-13	

TRAFFIC CONTROL DETAILS FOR FREEWAY SINGLE & MULTI–LANE WEAVE

SCALE: NONE | SHEET 1 OF 1 SHEETS | STA. TO STA.

F.A.P. RTE.	SECTION	COUNTY	TOTAL SHEETS	SHEET NO.
372	FAP 372 22 VARIOUS BS	COOK	138	133
TC-09		CONTRACT NO. 62U38		
		ILLINOIS	FED. AID PROJECT	

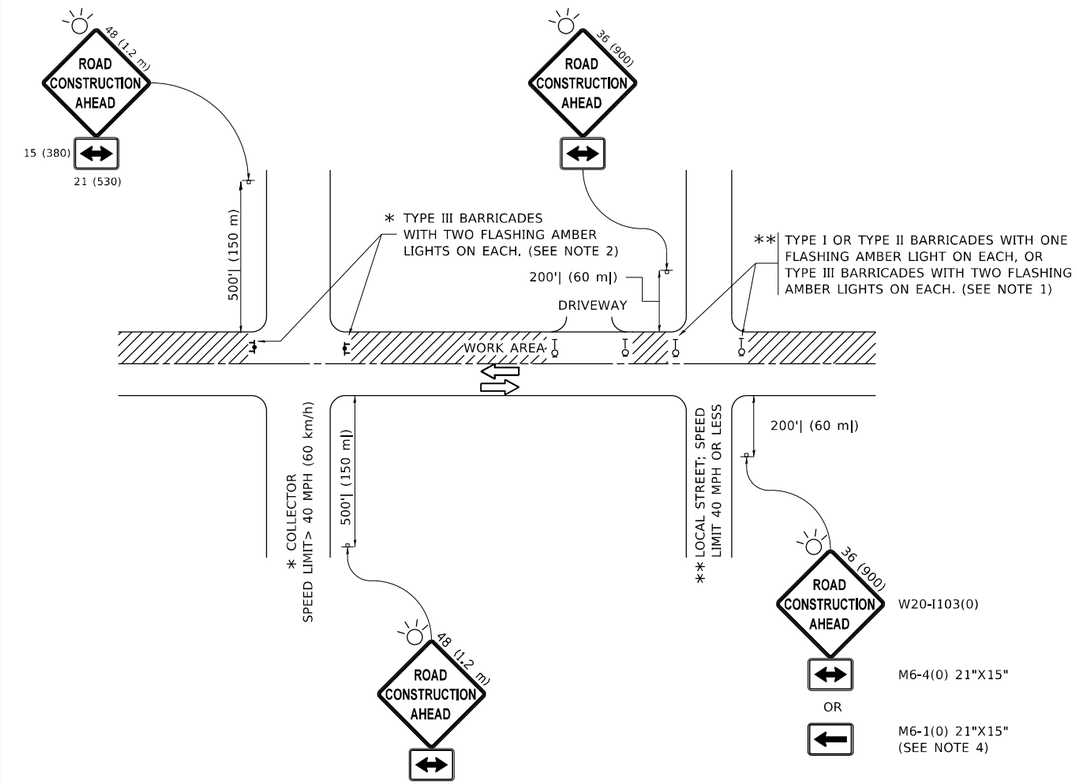

NOTES:

1. SIDE ROAD WITH A SPEED LIMIT OF 40 MPH (60 km/h) OR LESS AS SHOWN ON THE DRAWING AND AS DIRECTED BY THE ENGINEER:

   a) ONE "ROAD CONSTRUCTION AHEAD" SIGN 36 x 36 (900x900) WITH A FLASHER MOUNTED ON IT APPROXIMATELY 200' (60 m) IN ADVANCE OF THE MAIN ROUTE.

   b) THE CLOSED PORTION OF THE MAIN ROUTE SHALL BE PROTECTED BY BLOCKING WITH TYPE I, TYPE II OR TYPE III BARRICADES, 1/3 OF THE CROSS SECTION OF THE CLOSED PORTION.

2. SIDE ROAD WITH A SPEED LIMIT GREATER THAN 40 MPH (60 km/h) AS SHOWN ON THE DRAWING AND AS DIRECTED BY THE ENGINEER:

   a) ONE "ROAD CONSTRUCTION AHEAD" SIGN 48 x 48 (1.2 m x 1.2 m) WITH A FLASHER MOUNTED ON IT APPROXIMATELY 500' (150 m) IN ADVANCE OF THE MAIN ROUTE.

   b) THE CLOSED PORTION OF THE MAIN ROUTE SHALL BE PROTECTED BY BLOCKING WITH TYPE III BARRICADES, 1/2 OF THE CROSS SECTION OF THE CLOSED PORTION.

3. CONES MAY BE SUBSTITUTED FOR BARRICADES OR DRUMS AT HALF THE SPACING DURING DAY OPERATIONS. CONES SHALL BE A MINIMUM OF 28 (710) IN HEIGHT.

4. WHEN THE SIDE ROAD LIES BETWEEN THE BEGINNING OF THE MAINLINE SIGNING AND THE WORK ZONE, A SINGLE HEADED ARROW (M6-1) SHALL BE USED IN LIEU OF THE DOUBLE HEADED ARROW (M6-4).

5. WHEN WORK IS BEING PERFORMED ON A SIDE ROAD OR DRIVEWAY, FOLLOW THE APPLICABLE STANDARD(S). THE DIRECTIONAL ARROW (M6-1 OR M6-4) SHALL BE COVERED OR REMOVED WHEN NO LONGER CONSISTENT WITH THE TRAFFIC CONTROL SET-UP.

6. ADVANCE WARNING SIGNS ARE TO BE OMITTED ON DRIVEWAYS UNLESS OTHERWISE SPECIFIED IN THE PLANS OR BY THE ENGINEER.

7. THE TRAFFIC CONTROL AND PROTECTION FOR SIDE ROADS, INTERSECTIONS, AND DRIVEWAYS SHALL BE INCLUDED IN THE COST OF SPECIFIED TRAFFIC CONTROL STANDARDS OR ITEMS.

All dimensions are in inches (millimeters) unless otherwise shown.

MODEL: Default
FILE NAME: pw:\\ildot-pw.bentley.com:PWIDOT\Documents\IDOT Offices\District 1\Projects\D104323\CADData\Design\0tt514.dgn

USER NAME = Ivan.Diaz	DESIGNED - L.H.A.	REVISED - A. HOUSEH 10-15-96	STATE OF ILLINOIS DEPARTMENT OF TRANSPORTATION
	DRAWN -	REVISED - T. RAMMACHER 01-06-00	
PLOT SCALE = 100.0000 ' / in.	CHECKED -	REVISED - A. SCHUETZE 07-01-13	
PLOT DATE = 12/13/2022	DATE - 06-89	REVISED - A. SCHUETZE 09-15-16	

TRAFFIC CONTROL AND PROTECTION FOR SIDE ROADS, INTERSECTIONS, AND DRIVEWAYS

SCALE: NONE | SHEET 1 OF 1 SHEETS | STA. TO STA.

F.A.P. RTE.	SECTION	COUNTY	TOTAL SHEETS	SHEET NO.
372	FAP 372 22 VARIOUS BS	COOK	138	134
	TC-10	CONTRACT NO. 62U38		
		ILLINOIS FED. AID PROJECT		

TURN BAY ENTRANCE AT START OF LANE CLOSURE TAPER

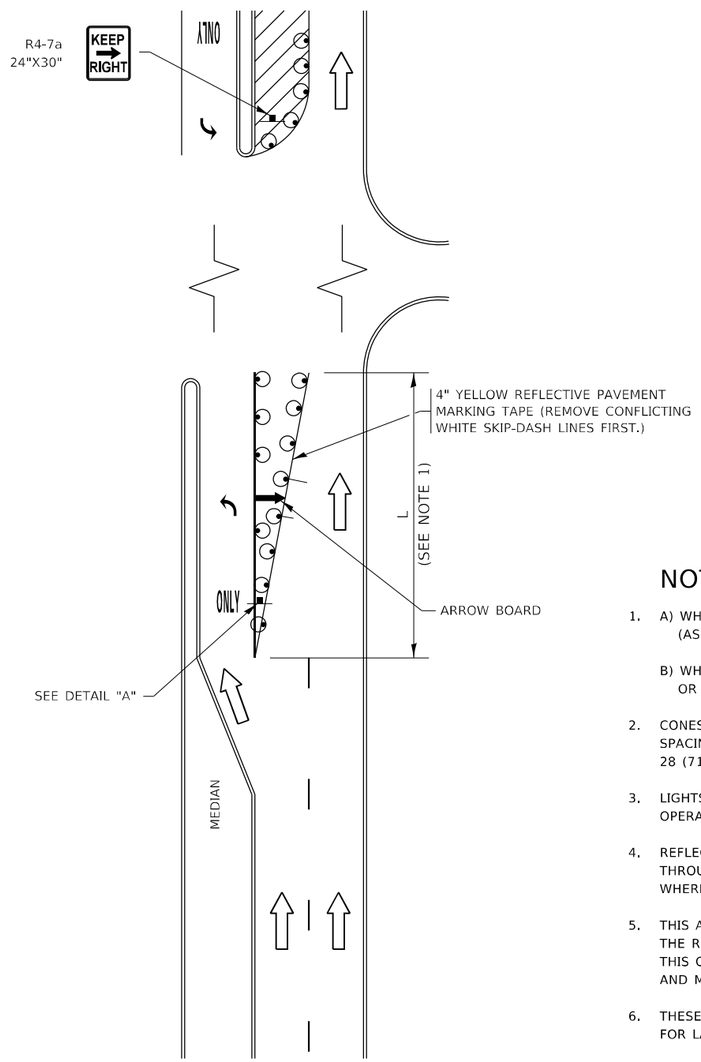

FIGURE 1

LEGEND

- WORK AREA
- LANE OPEN TO TRAFFIC
- ARROW BOARD
- TYPE I OR II BARRICADE OR DRUM WITH STEADY BURN LIGHT
- DRUM WITH STEADY BURN LIGHT
- SIGN ASSEMBLY
- TYPE I OR II CHECK BARRICADE WITH FLASHING LIGHT

NOTES:

1. A) WHEN "L" IS ≤ THE STORAGE LENGTH OF THE TURN LANE (AS SHOWN IN FIG. 1), USE FIGURE 1.

   B) WHEN "L" IS > THE STORAGE LENGTH OF THE TURN LANE OR THE TURN LANE IS WITHIN THE LANE CLOSURE, USE FIGURE 2.

2. CONES MAY BE SUBSTITUTED FOR BARRICADES OR DRUMS AT HALF THE SPACING DURING DAY OPERATIONS. CONES SHALL BE A MINIMUM OF 28 (710) IN HEIGHT.

3. LIGHTS WILL NOT BE REQUIRED ON BARRICADES OR DRUMS FOR DAY OPERATIONS. ALL LIGHTS SHALL BE MONODIRECTIONAL.

4. REFLECTIVE TEMPORARY PAVEMENT MARKINGS SHALL BE PLACED THROUGHOUT THE BARRICADED AREAS OF EACH TURN BAY AS SHOWN WHERE THE CLOSURE TIME IS GREATER THAN FOURTEEN (14) DAYS.

5. THIS APPLICATION ALSO APPLIES WHEN WORK IS BEING PERFORMED IN THE RIGHT LANE(S) AND THE RIGHT TURN BAY IS TO REMAIN OPEN. UNDER THIS CONDITION, "RIGHT TURN LANE" R3-I100R 24 x 24 (600 x 600) AND M6-2R 21 x 15 (530 x 380) SHALL BE USED.

6. THESE CONTROLS SHALL SUPPLEMENT MAINLINE TRAFFIC CONTROL FOR LANE CLOSURES.

7. THE SIGNS SHALL BE MOUNTED ABOVE THE BARRICADES/DRUMS ON SEPARATE SIGN SUPPORTS THAT MEET NCHRP 350 OR MASH PREQUIREMENTS.

8. TRAFFIC CONTROL AND PROTECTION AT TURN BAYS (TO REMAIN OPEN TO TRAFFIC) SHALL BE INCLUDED IN THE COST OF SPECIFIED TRAFFIC CONTROL STANDARDS OR ITEMS.

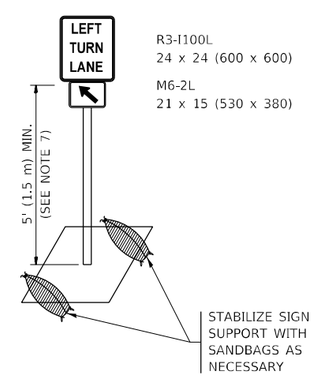

DETAIL A

TURN BAY ENTRANCE WITHIN A LANE CLOSURE

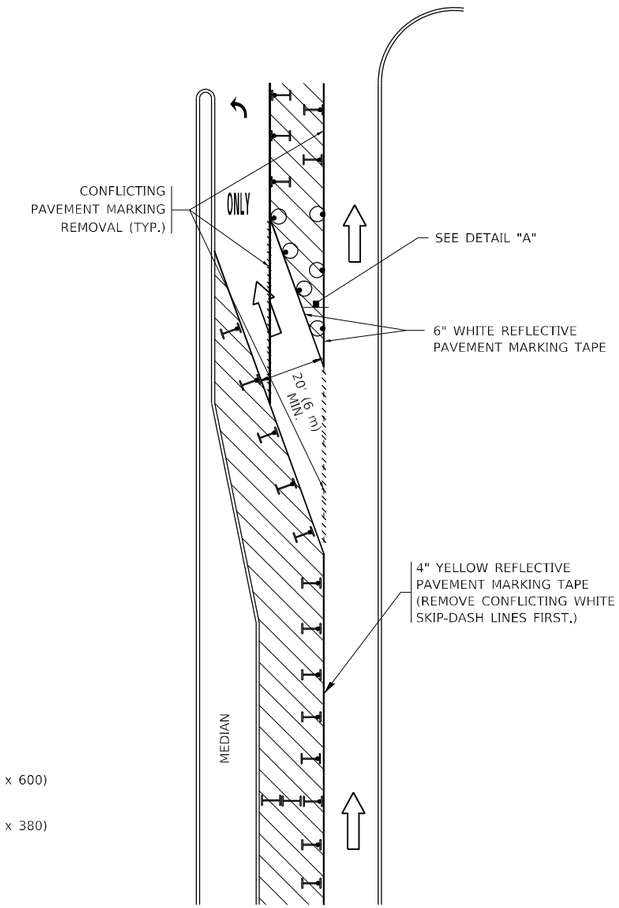

FIGURE 2

All dimensions are in inches (millimeters) unless otherwise shown.

MODEL: Default
FILE NAME: pw:\\ildot-pw.bentley.com:PWIDOT\Documents\IDOT Offices\District 1\Projects\D104323\CADData\Design\94Std.dgn

USER NAME = Ivan.Diaz	DESIGNED - T. RAMMACHER 09-08-94	REVISED - R. BORO 09-14-09	STATE OF ILLINOIS DEPARTMENT OF TRANSPORTATION
	DRAWN - A. HOUSEH 11-07-95	REVISED - A. SCHUETZE 07-01-13	
PLOT SCALE = 100.0000 ' / in.	CHECKED - A. HOUSEH 10-12-96	REVISED - A. SCHUETZE 09-15-16	
PLOT DATE = 12/13/2022	DATE - T. RAMMACHER 01-06-00	REVISED -	

TRAFFIC CONTROL AND PROTECTION AT TURN BAYS (TO REMAIN OPEN TO TRAFFIC)

SCALE: NONE | SHEET 1 OF 1 SHEETS | STA. TO STA.

F.A.P. RTE.	SECTION	COUNTY	TOTAL SHEETS	SHEET NO.
372	FAP 372 22 VARIOUS BS	COOK	138	135
	TC-14	CONTRACT NO. 62U38		
		ILLINOIS	FED. AID PROJECT	

PARTIAL RAMP CLOSURE DETAILS

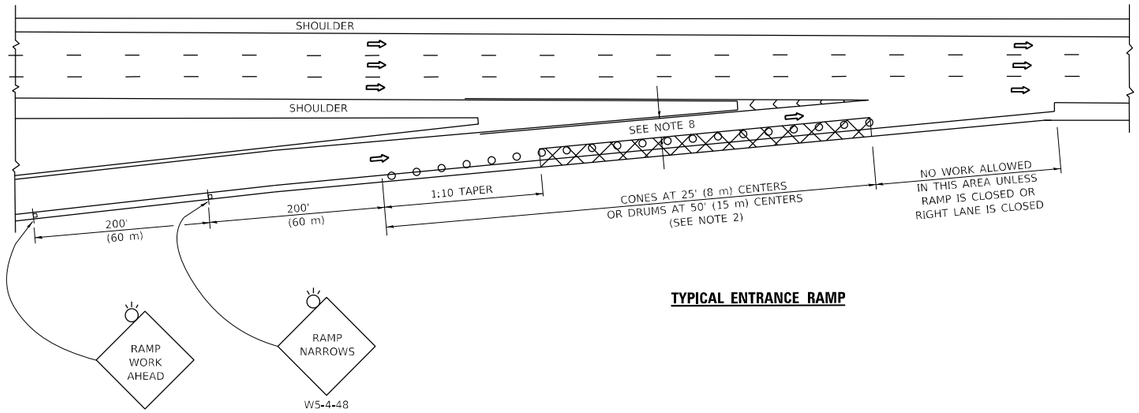

TYPICAL ENTRANCE RAMP

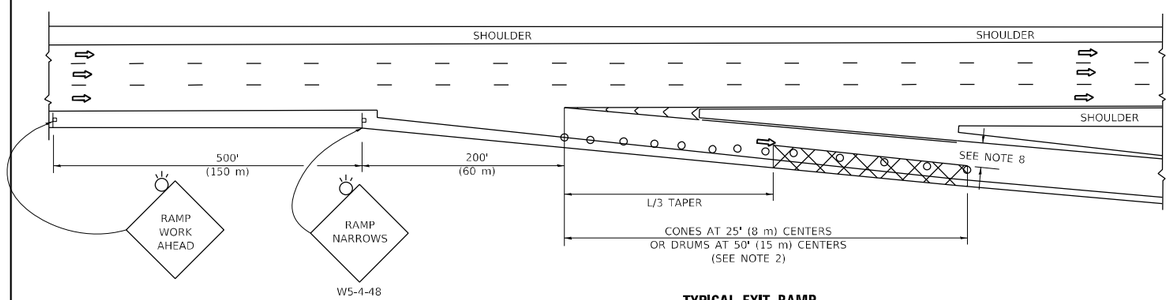

TYPICAL EXIT RAMP

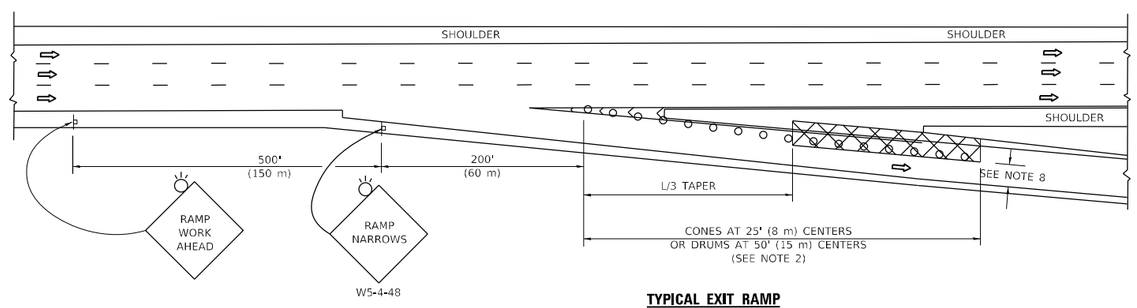

TYPICAL EXIT RAMP

SHOULDER CLOSURE DETAILS

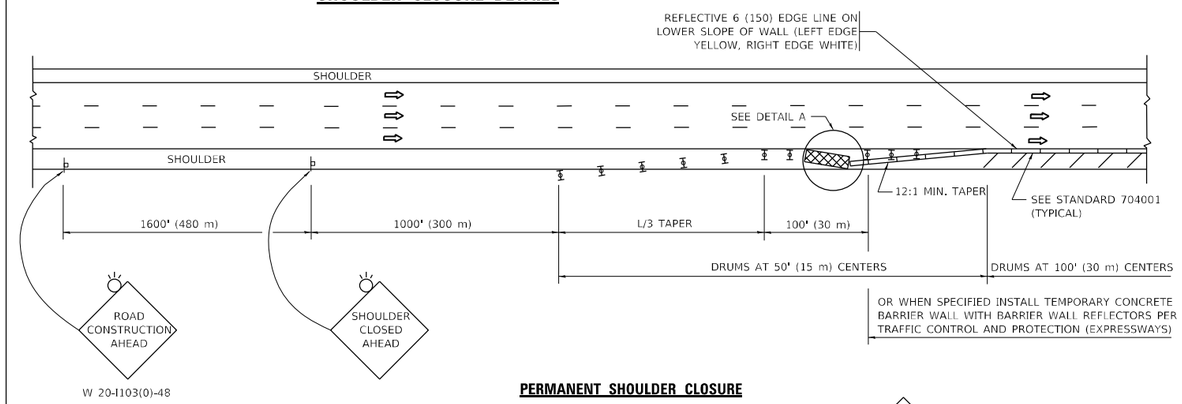

PERMANENT SHOULDER CLOSURE

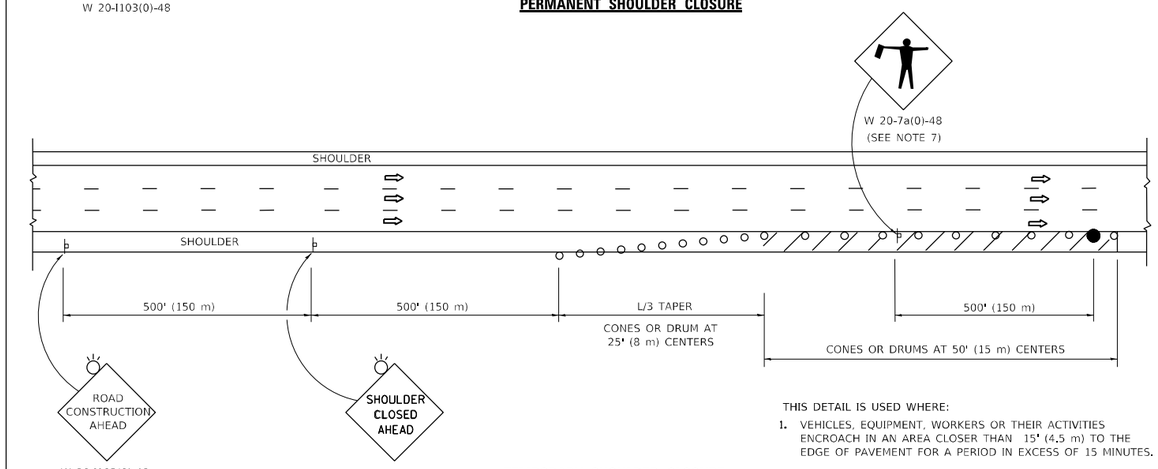

TEMPORARY SHOULDER CLOSURE

THIS DETAIL IS USED WHERE:

1. VEHICLES, EQUIPMENT, WORKERS OR THEIR ACTIVITIES ENCROACH IN AN AREA CLOSER THAN 15' (4.5 m) TO THE EDGE OF PAVEMENT FOR A PERIOD IN EXCESS OF 15 MINUTES.

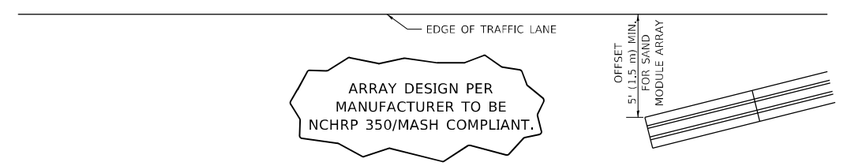

DETAIL "A"
IMPACT ATTENTUATOR, TEMPORARY
(SEE NOTE 5)

SYMBOLS

- ACTIVE WORK AREA
- SIGN ON PORTABLE OR PERMANENT SUPPORT
- FLAGGER WITH CONTROL SIGN
- TYPE II BARRICADE OR DRUM
- CONE, DRUM OR BARRICADE
- IMPACT ATTENUATOR OF TYPE AND TEST LEVEL SPECIFIED

GENERAL NOTES:

1. THE "L" DISTANCE EQUALS:

SPEED LIMIT	FORMULAS	
	METRIC	ENGLISH
45 mph (80 km/h) OR GREATER:	L=0.65(W)(S)	L=(W)(S)

W = WIDTH OF OFFSET IN FEET (METERS)
S = NORMAL POSTED SPEED MPH (KM/H)

2. TYPE II BARRICADES OR DRUMS ARE REQUIRED FOR ALL NIGHTTIME CLOSURES. TYPE II BARRICADES OR DRUMS WITH MONODIRECTIONAL STEADY BURN LIGHTS ARE REQUIRED FOR DELINEATING OBSTICLES, EXCAVATIONS, OR HAZARDS EXCEEDING 100 FT (30m) IN LENGTH AT NIGHT.
3. ALL SIGNS SHALL BE POST MOUNTED IF THE CLOSURE TIME EXCEEDS FOUR DAYS.
4. FLASHING LIGHTS SHALL BE USED DURING THE HOURS OF DARKNESS AND SHALL BE INSTALLED ABOVE THE FIRST TWO SETS OF SIGNS.
5. THE IMPACT ATTENTUATOR, TEMPORARY IS NOT REQUIRED WHEN THE TEMPORARY CONCRETE BARRIER WALL IS PROTECTED BY OR IS TIED INTO THE EXISTING GUARDRAIL. IF OFFSET IS LESS THAN 5 FEET USE NARROW USE TYPE DEVICE TO MEET NCHRP350/MASH.
6. AUTHORIZATION FROM THE DISTRICT'S BUREAU OF TRAFFIC IS REQUIRED FOR ALL FREEWAY CLOSURES.
7. THE FLAGGER AND FLAGGER SIGN ARE REQUIRED AT THE ABOVE WORK SITES WHEN:
   a. FOUR OR MORE WORK VEHICLES ENTER THE TRAFFIC LANES IN A ONE HOUR PERIOD.
   b. THE WORK AVTIVITY REQUIRES FREQUENT ENCROACHMENT INTO THE LANE OPEN TO TRAFFIC.

   THE FLAGGER SHALL BE STATIONED APPROXIMATELY 100' (30 m) TO 200' (60 m) IN ADVANCE OF THE WORKERS.
8. 12' MIN. WIDTH TANGENT SECTION
   16' MIN. WIDTH CURVE SECTION.
9. TEMPORARY SHOULDER AND NON-SYSTEM INTERCHANGE PARTIAL RAMP CLOSURES ARE ALLOWED WEEKDAYS BETWEEN 9:00 A.M. AND 3:00 P.M. AND BETWEEN 7:00 P.M. AND 5:00 A.M. OR AS APPROVED BY THE EXPRESSWAY TRAFFIC OPERATIONS ENGINEER. PERMANENT SHOULDER AND PARTIAL RAMP CLOSURES WILL ONLY BE PERMITTED IF CALLED FOR IN THE PLANS OR AS APPROVED BY THE EXPRESSWAY OPERATIONS ENGINEER.

ALL DIMENSIONS ARE IN INCHES (MILLIMETERS) UNLESS OTHERWISE SHOWN.

USER NAME = Ivan.Diaz	DESIGNED -	REVISED -	S.P.B. 12-09
	DRAWN - D.W.S.	REVISED -	M.D. 06-13
PLOT SCALE = 100.0000 ' / in.	CHECKED -	REVISED -	M.D. 01-18
PLOT DATE = 12/13/2022	DATE - 11-96	REVISED -	M.D. 10-20

STATE OF ILLINOIS
DEPARTMENT OF TRANSPORTATION

TRAFFIC CONTROL DETAILS FOR FREEWAY SHOULDER CLOSURES AND PARTIAL RAMP CLOSURES

SCALE: NONE | SHEET 1 OF 1 SHEETS | STA. TO STA.

F.A.P. RTE.	SECTION	COUNTY	TOTAL SHEETS	SHEET NO.
372	FAP 372 22 VARIOUS BS	COOK	138	136
	TC-17	CONTRACT NO. 62U38		
		ILLINOIS FED. AID PROJECT		

SIGNING FOR FLAGGING OPERATIONS AT WORK ZONE OPENINGS

WORK ZONE EXIT OPENING

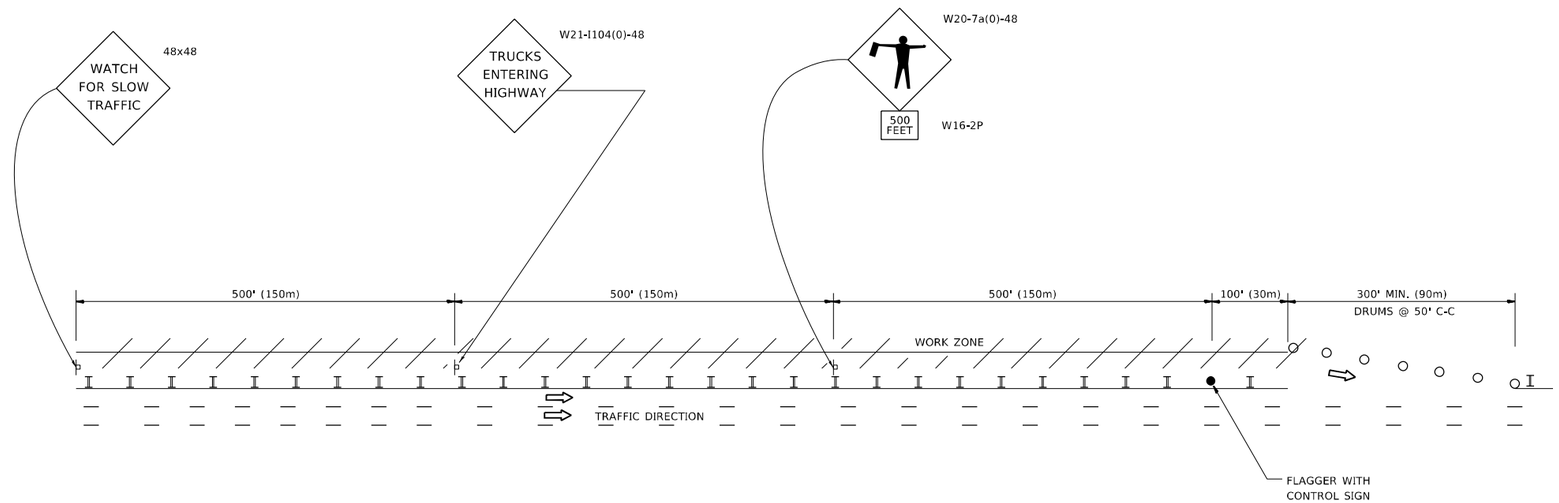

WORK ZONE ENTRY OPENING

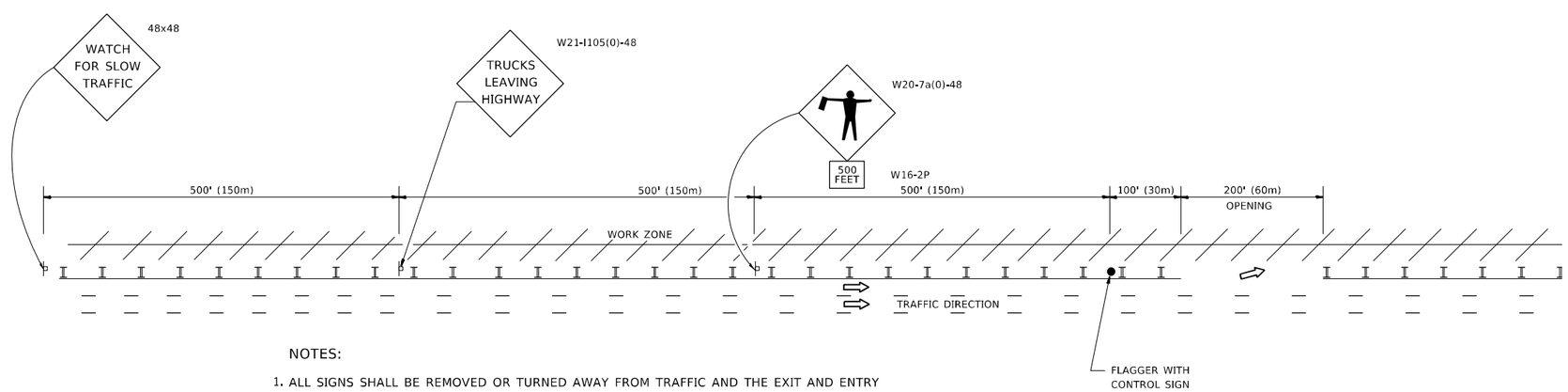

NOTES:

1. ALL SIGNS SHALL BE REMOVED OR TURNED AWAY FROM TRAFFIC AND THE EXIT AND ENTRY OPENINGS SHALL BE CLOSED WHEN THE FLAGGING OPERATION CEASES. NON OPERATING EQUIPMENT SHALL COMPLY WITH ARTICLE 701.11
2. WORK ZONE OPENINGS SHALL BE A MINIMUM OF ONE HALF MILE APART AND A MINIMUM OF ONE QUARTER MILE FROM ALL ENTRANCE AND EXIT RAMPS.
3. EXITING THE WORK ZONE AT ANY PLACE OTHER THAN AT A WORK ZONE EXIT OPENING WILL BE PROHIBITED.
4. ALL VEHICLES SHALL ENTER THE WORK ZONE AT ENTRY OPENINGS, USING THEIR TURN SIGNALS TO WARN MOTORISTS
5. FLAGGERS SHALL NOT STOP TRAFFIC OR DIRECT TRAFFIC INTO AN ADJACENT LANE.

ALL DIMENSIONS ARE IN INCHES (MILLIMETERS) UNLESS OTHERWISE SHOWN

USER NAME = Ivan.Diaz	DESIGNED -	REVISED -	J.A.F. 02-06
	DRAWN -	REVISED -	S.P.B. 01-07
PLOT SCALE = 100.0000 ' / in.	CHECKED -	REVISED -	S.P.B. 12-09
PLOT DATE = 12/13/2022	DATE -	REVISED -	M.D.06-13

STATE OF ILLINOIS
DEPARTMENT OF TRANSPORTATION

FREEWAY /EXPRESSWAY SIGNING FOR FLAGGING OPERATIONS AT WORK ZONE OPENINGS ON FREEWAYS /EXPRESSWAYS

SCALE: NONE | SHEET 1 OF 1 SHEETS | STA. TO STA.

F.A.P. RTE.	SECTION	COUNTY	TOTAL SHEETS	SHEET NO.
372	FAP 372 22 VARIOUS BS	COOK	138	137
	TC-18	CONTRACT NO. 62U38		
		ILLINOIS	FED. AID PROJECT	

MODEL: Default
FILE NAME: pw:\\ildot-pw.bentley.com:PWIDOT\Documents\IDOT Offices\District 1\Projects\D104323\CADData\Design\D104504.dgn

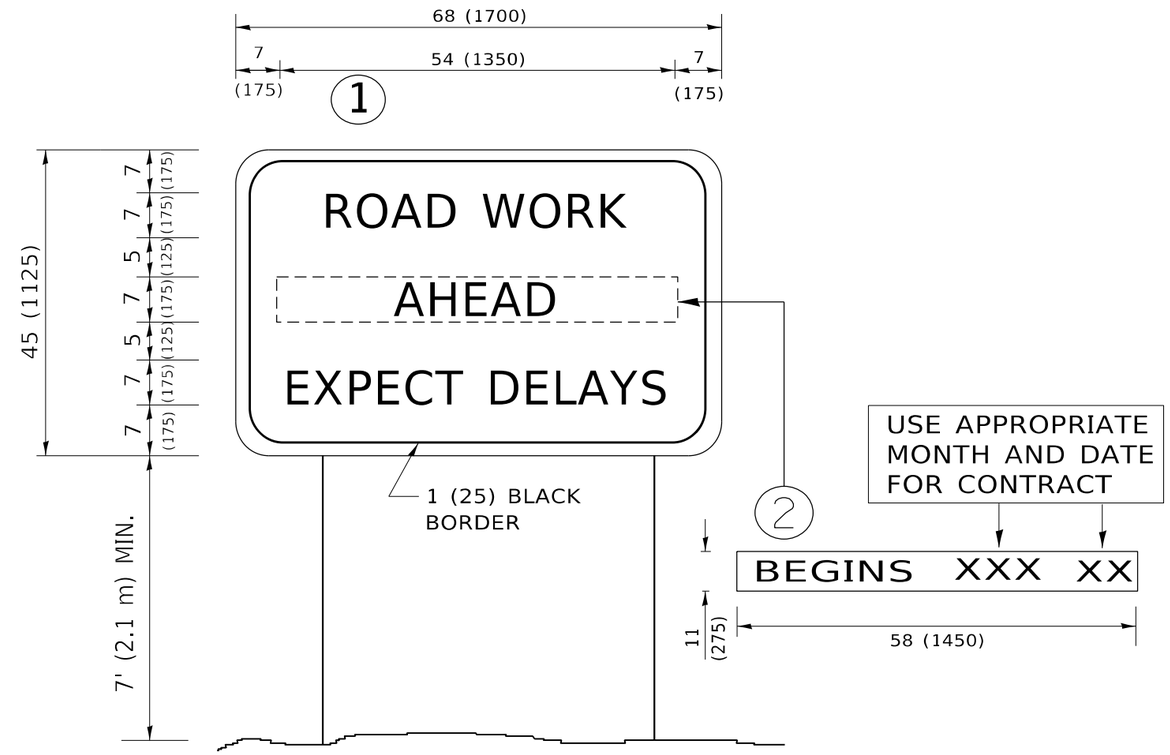

NOTES:

1. USE BLACK LETTERING ON ORANGE BACKGROUND.
2. ERECT SIGNS IN ADVANCE OF THE LOCATION FOR THE "ROAD CONSTRUCTION AHEAD" SIGN AT LOCATIONS AS DIRECTED BY THE ENGINEER.
3. ERECT SIGN (1) WITH INSTALLED PANEL (2) ONE WEEK PRIOR TO THE START OF CONSTRUCTION.
4. REMOVE PANEL (2) SOON AFTER THE START OF CONSTRUCTION.
5. SEE SPECIAL PROVISION FOR "TEMPORARY INFORMATION SIGNING" FOR ADDITIONAL INFORMATION.
6. ONE SIGN ASSEMBLY EQUALS 25.70 SQ. FT. (2.3 SQ. M.)
7. SHALL BE PAID FOR AS TEMPORARY INFORMATION SIGNING.

ALL DIMENSIONS ARE IN INCHES (MILLIMETERS) UNLESS OTHERWISE SHOWN.

MODEL: Default
FILE NAME: pw:\\ildot-pw.bentley.com:PWIDOT\Documents\IDOT Offices\District 1\Projects\D104323\CADData\Design\D104504.dgn

USER NAME = Ivan.Diaz	DESIGNED -	REVISED -	R. MIRS 09-15-97
	DRAWN -	REVISED -	R. MIRS 12-11-97
PLOT SCALE = 100.0000 ' / in.	CHECKED -	REVISED -	T. RAMMACHER 02-02-99
PLOT DATE = 12/13/2022	DATE -	REVISED -	C. JUCIUS 01-31-07

STATE OF ILLINOIS
DEPARTMENT OF TRANSPORTATION

ARTERIAL ROAD INFORMATION SIGN

SCALE: NONE | SHEET 1 OF 1 SHEETS | STA. | TO STA.

F.A.P. RTE.	SECTION	COUNTY	TOTAL SHEETS	SHEET NO.
372	FAP 372 22 VARIOUS BS	COOK	138	138
	TC-22	CONTRACT NO. 62U38		
		ILLINOIS	FED. AID PROJECT	