UNDERDRAIN SCHEDULE

STRUCTURE DATA						SEWER DATA		
STRUCURE NUMBER	NORTHING	EASTING	STRUCTURE TYPE	RIM ELEVATION	INVERT ELEVATION	PAY LENGTH (FT.)	SLOPE %	
U-1	2095693.11	1111670.94	CLEANOUT	715.31	NE 713.38			
						214.6	0.50%	
U-2	2095873.55	1111608.23	INSPECTION HOLE	714.79	SW 712.31 SE 712.31 NW 712.31			
						16.5	10.79%	*
I-4	2095862.62	1111593.30	MANHOLE	712.70	NE 710.53			
U-2	2095873.55	1111608.23	INSPECTION HOLE	714.79	SW 712.31 SE 712.31 NW 712.31			
						107.7	0.50%	
U-3	2095960.47	1111544.59	SLOPE BREAK	714.79	NW 712.85 SE 712.85			
						107.7	0.50%	
U-4	2096047.38	1111480.96	INSPECTION HOLE	714.79	NW 712.31 SW 712.31 SE 712.31			
						16.5	6.79%	*
MH-6	2096036.45	1111466.03	MANHOLE	713.36	NE 711.19			
U-4	2096047.38	1111480.96	INSPECTION HOLE	714.79	NW 712.31 SW 712.31 SE 712.31			
						176.0	2.10%	
U-5	2096150.36	1111365.23	CLEANOUT	718.01	NE 716.00			
U-6	2095797.65	1111736.93	CLEANOUT	715.70	SW 712.62			
						47.3	0.50%	
U-7	2095771.42	1111751.46	INSPECTION HOLE	714.91	N 712.38 E 712.38 W 712.38			
						13.2	13.48%	*
EXISTING MH-9	2095786.62	1111751.99	MANHOLE	712.77	S 710.60			
U-7	2095771.42	1111751.46	INSPECTION HOLE	714.91	N 712.38 E 712.38 W 712.38			
						133.1	0.50%	
U-8	2095839.12	1111793.32	CLEANOUT	715.70	NE 713.04			
U-9	2096119.57	1111485.73	CLEANOUT	715.52	W 713.29			
						29.4	0.50%	
U-10	2096118.95	1111462.03	INSPECTION HOLE	715.20	SE 713.14 NW 713.14			
						125.7	0.50%	
U-11	2096226.55	1111412.24	CLEANOUT	718.52	S 713.77			
U-12	2095836.04	1111666.70	CLEANOUT	714.80	NW 713.15			
						60.3	0.50%	
U-13	2095865.13	1111826.33	SLOPE BREAK	–	E 713.45 NW 713.45			
						67.5	0.70%	
I-8	2095917.23	1111783.23	MANHOLE	715.14	SE 712.97 NW 712.97			
						67.5	0.70%	
U-14	2095974.06	1111746.58	SLOPE BREAK	–	SE 713.45 NW 713.45			
						67.5	0.70%	
MH-9	2096026.16	1111703.47	MANHOLE	715.14	SE 712.97 NW 712.97			
						13.0	0.70%	
U-15	2096039.04	1111699.00	CAPPED END	–	SE 713.07			

* NONPERFORATED UNDERDRAIN, ITEM AR725544

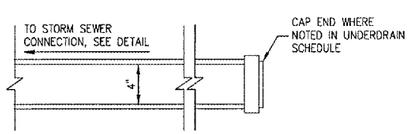

NOTE:
CAP MUST BE APPROVED PRIOR TO INSTALLATION, SEE SPECIAL PROVISIONS.

UNDERDRAIN CAPPED END

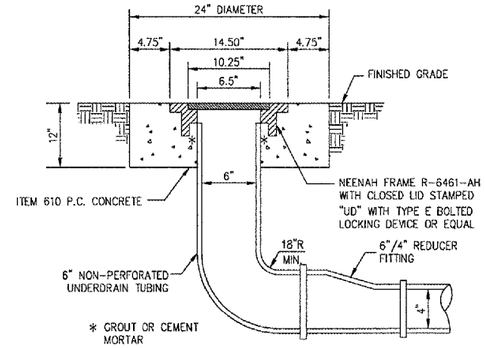

NOTE
FRAME AND LID, CONCRETE, 6" NON-PERFORATED TUBING, REDUCER FITTINGS AND ELBOW FITTINGS ARE INCIDENTAL TO CLEANOUT.

UNDERDRAIN CLEANOUT

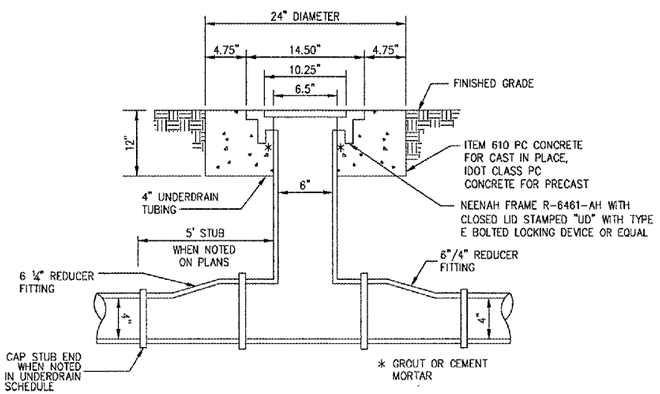

UNDERDRAIN INSPECTION HOLE

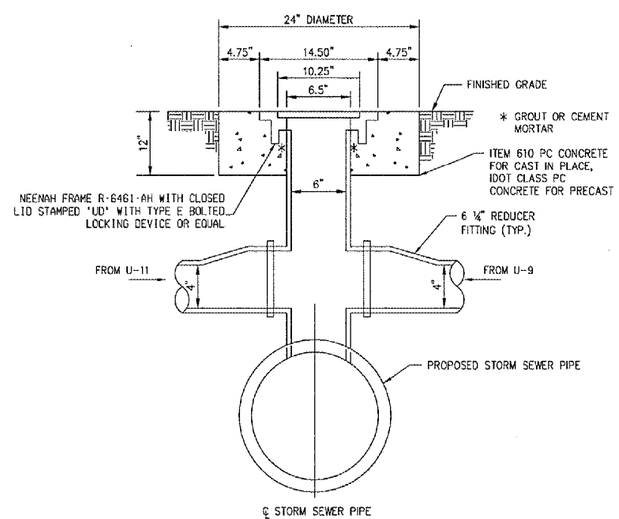

UNDERDRAIN INSPECTION HOLE (U-10)

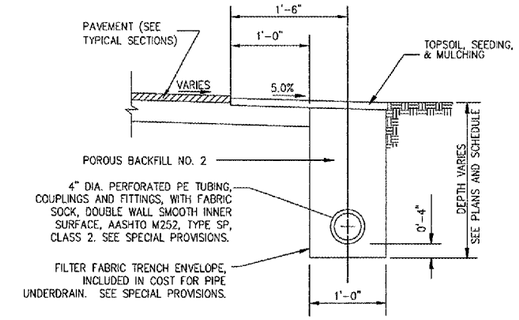

PERFORATED UNDERDRAIN ALONG PAVEMENT EDGE

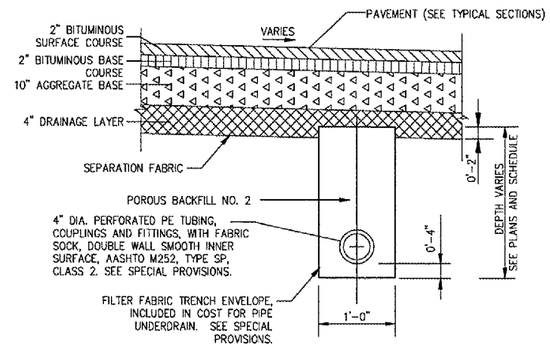

PERFORATED UNDERDRAIN UNDER PAVEMENT

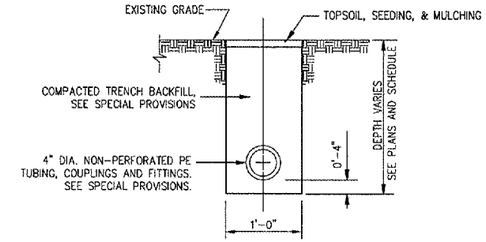

NON-PERFORATED UNDERDRAIN

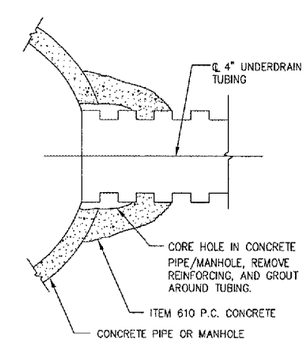

NOTE:
1. HOLE FOR UNDERDRAIN TO BE PRECAST INTO MANHOLES AT PROPER INVERT.

UNDERDRAIN CONCRETE COLLAR AND GROUT CONNECTION

WA055

HANSON

HANSON PROFESSIONAL SERVICES INC.

815 Commerce Drive, Suite 200
Oak Brook, Illinois 60523
Telephone: 630.990.3800
Fax: 630.990.3801

Waukegan Regional Airport
Waukegan Regional Port District

3580 North McAree Road
Waukegan, Illinois 60087
Phone: 847.244.0055
Fax: 847.244.3813

WAUKEGAN REGIONAL AIRPORT

CONSTRUCT NEW T-HANGAR APRONS, TAXIWAYS AND AUTO ACCESS

IDA PROJECT NO. UGN-3499

No.	Drawing Issue Description	Date	By

Date
JANUARY 27, 2006

Sheet Title
UNDERDRAIN SCHEDULE AND DETAILS

831-04TXYD
Project Number

AAP	11/15/05
Layout By	Date
AAP	11/15/05
Designed By	Date
KLK/RMH	01/23/06
Reviewed By	Date
KLK	AAP
Drawn By	

Sheet No.
13

AAP
01/23/2006, 01:49 PM
I:\04Jobs\0083\31831047XYD_REV\Civil\Sheet\13 Underdrain Schedule and Details.dgn