STORM SEWER SCHEDULE

STRUCTURE DATA							SEWER DATA		
STRUCURE NUMBER	NORTHING	EASTING	STRUCTURE TYPE	DIAMETER (IN.)	RIM ELEVATION	INVERT ELEVATION	PAY LENGTH (FT.)	SIZE (IN.)	SLOPE %
I-8	2095917.23	1111783.23	INLET	24	715.14	NW 711.00			
							133	12	0.75
MH-9	2096026.16	1111703.47	MANHOLE	48	715.14	SE 710.01 NW 709.66			
							132	15	0.75
MH-10	2096135.08	1111623.72	MANHOLE	48	714.01	SE 708.67 NW 708.32			
							79	18	0.60
MH-11	2096201.65	1111574.99	MANHOLE	72	714.13	SE 707.85 SW 707.15			
							181.5	24	0.35
MH-7	2096092.07	1111425.31	MANHOLE	60	713.69	-			
I-1	2096274.08	1111453.55	INLET	24	716.14	SE 714.14			
							139	8" PVC	2.30
MH-11	2096201.65	1111574.99	MANHOLE	72	714.13	SE 707.85 SW 707.15			
EXISTING MH-3	2095861.33	1111858.91	EXISTING MANHOLE	EXISTING MANHOLE	EX ELEV 712.87 PR ELEV 714.51	SW 704.72	ADJUST MANHOLE, PAID UNDER ITEM AR751943		
I-4	2095862.62	1111593.30	INLET	24	712.70	NW 708.90			
							106	12	0.60
MH-5	2095949.54	1111529.67	MANHOLE	48	713.11	SE 708.27 NW 707.92			
							105	15	0.60
MH-6	2096036.45	1111466.03	MANHOLE	48	713.36	SE 707.29 NW 706.94			
							65.5	18	0.60
MH-7	2096092.07	1111425.31	MANHOLE	60	713.69	SE 706.54 NE 706.50 NW 705.94			
							190.5	24	0.35
MH-16	2096248.49	1111310.78	MANHOLE	48	714.85	SE 705.26 NW 705.11			
							131	24	0.35
MH-17	2096371.02	1111257.31	MANHOLE	48	713.89	SE 704.66 NW 704.56			
							222.5	24	0.35
MH-18	2096538.83	1111107.18	MANHOLE	48	711.87	SE 703.78 NW 703.68			
							147	24	0.35
MH-19	2096650.62	1111007.17	MANHOLE	48	710.58	SE 703.17 W 703.02 **			
							77	24	0.35
EXISTING 6F	2096650.53	1110927.32	EXISTING MANHOLE	EXISTING MANHOLE	708.16	E 702.75 NE 698.50			

** PLACE 4" DIA. PVC RESTRICTOR PIPE AT WEST INVERT (ELEV=703.02) OF MANHOLE MH-19 (SEE DETAIL)

NOTES

1. FOR STRUCTURE LOCATIONS SEE STORM SEWER SCHEDULE.
2. FRAME AND GRATE, ADJUSTING RINGS OR RISER SHALL BE MORTARED.
3. IDOT STANDARD 602406-01 MAY BE USED INSTEAD OF THE MANHOLE WITH FLAT SLAB TOP WHERE STRUCTURE HEIGHT IS SUFFICIENT TO MEET THE MINIMUMS FOR THE STANDARD.
4. ALL MANHOLE AND INLET STRUCTURES TO BE PRECAST.
5. CONNECTIONS INCIDENTAL TO UNDERDRAIN.

STRUCTURE NUMBER	STRUCTURE TYPE	INSIDE DIA. "D" (IN.)	WALL THICKNESS "T" (IN.)	TOP THICKNESS "H" (IN.)	BOTTOM THICKNESS "B" (IN.)	FRAME HEIGHT "X" (IN.)	HOLE OPENING "L" (IN.)	FRAME TYPE (EAST JORDAN)	COVER/GRATE (EAST JORDAN)
I-1	INLET	24	3	---	4	6	24	1020	TYPE M1
I-4	INLET	24	3	---	4	6	24	1020	TYPE M1
MH-5	MANHOLE	48	5	6	6	6	24	1020	TYPE M1
MH-6	MANHOLE	48	5	6	6	6	24	1020	TYPE M1
MH-7	MANHOLE	60	5	8	8	6	24	1020	TYPE M1
I-8	INLET	24	3	---	4	9	24	1050	TYPE M1
MH-9	MANHOLE	48	5	6	6	9	24	1050	TYPE M1
MH-10	MANHOLE	48	5	6	6	9	24	1050	TYPE M1
MH-11	MANHOLE	72	6	8	8	6	24	1020	TYPE M1
MH-16	MANHOLE	48	5	6	6	6	24	1020	TYPE A "STORM"
MH-17	MANHOLE	48	5	6	6	6	24	1020	TYPE M1
MH-18	MANHOLE	48	5	6	6	6	24	1020	TYPE A "STORM"
MH-19	MANHOLE	48	5	6	6	6	24	1020	TYPE A "STORM"

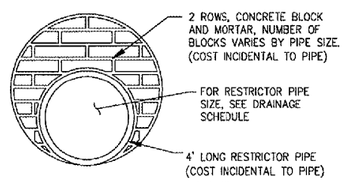

RESTRICTOR PIPE

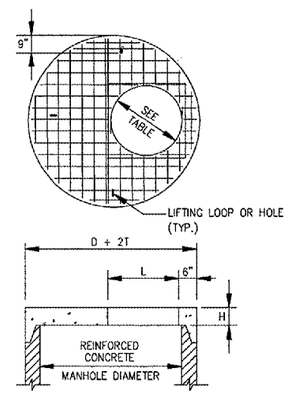

NOTES

1. ADDITIONAL TOP AND BOTTOM BARS PLACED ADJACENT TO ACCESS HOLE.
2. MINIMUM 1" COVER ON STEEL BARS.
3. THREE LIFTING LOOPS OR HOLES.
4. MINIMUM STEEL REINFORCEMENT IN EACH DIRECTION TO BE WWF 1.06 SQ. IN./FT OR EQUIVALENT, IN ACCORDANCE WITH AASHTO M 199 AND IDOT STANDARDS.

PRECAST REINFORCED CONCRETE FLAT SLAB TOP
(IDOT STANDARD 602601)

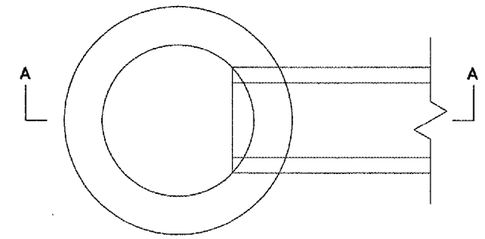

PLAN

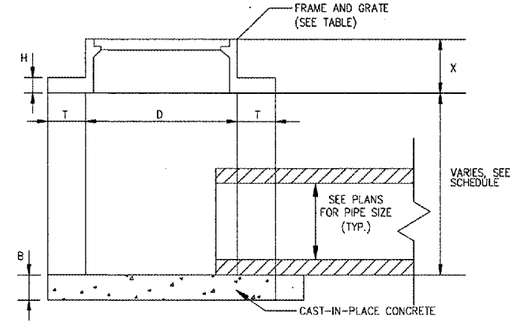

SECTION A-A

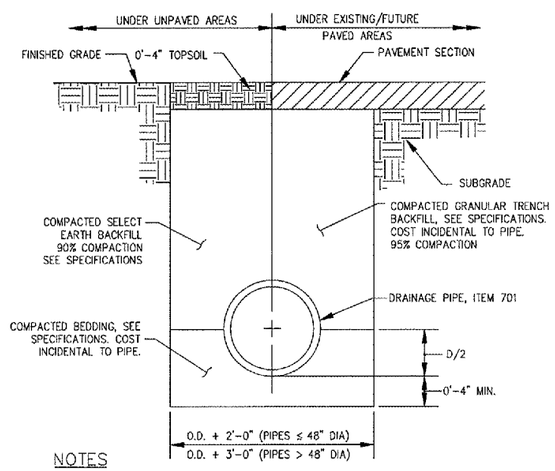

NOTES

1. UNSUITABLE MATERIAL ENCOUNTERED DURING PLACEMENT OF BEDDING SHALL BE REMOVED AND REPLACED.
2. WITHIN 3 FEET OF EXISTING AND FUTURE PAVED AREA, GRANULAR BACKFILL IS TO BE USED INSTEAD OF EARTH BACKFILL.

PIPE TRENCH

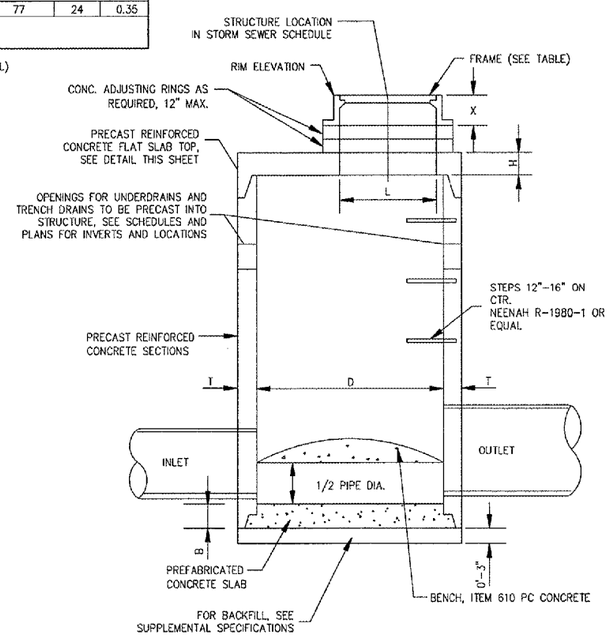

MANHOLE WITH FLAT SLAB TOP
(IDOT STANDARDS 602406-MODIFIED)

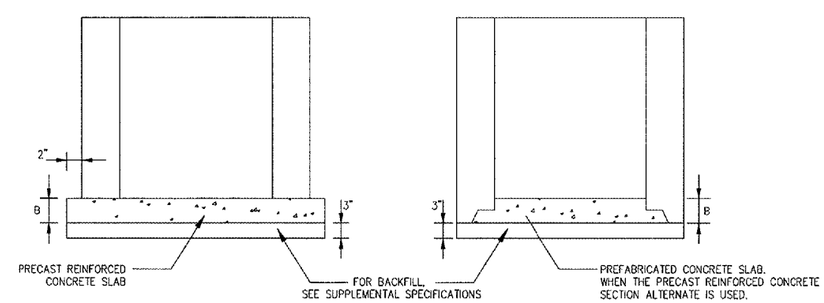

ALTERNATE METHODS

NOTES

1. SEE DRAINAGE AND UNDERDRAIN SCHEDULE FOR LOCATION, SIZE AND NUMBER OF PIPE CONNECTIONS.
2. INLETS TO BE PRECAST REINFORCED CONCRETE SECTIONS (T = 3").

INLET TYPE A
(IDOT STANDARD 602301)

WA055

HANSON

HANSON PROFESSIONAL SERVICES INC.

815 Commerce Drive, Suite 200
Oak Brook, Illinois 60523
Telephone: 630.990.3800
Fax: 630.990.3801

Waukegan Regional Airport
Waukegan Regional Port District

3580 North McAree Road
Waukegan, Illinois 60087
Phone: 847.244.0055
Fax: 847.244.3813

WAUKEGAN REGIONAL AIRPORT

CONSTRUCT NEW T-HANGAR APRONS, TAXIWAYS AND AUTO ACCESS

IDA PROJECT NO. UGN-3499

No.	Drawing Issue Description	Date	By

Date

JANUARY 27, 2006

Sheet Title

STORM SEWER SCHEDULE AND DETAILS

831-04TXYD
Project Number

AAP	11/15/05
Layout By	Date
AAP	11/15/05
Designed By	Date
KLK/RMH	01/23/06
Reviewed By	Date
KLK	AAP
Drawn By	

12
Sheet No.

AAP
01/23/2006, 01:48 PM
I:\04Jobs\0383\83104TXYD_REV\Civil\Sheet\12 Sewer Schedule and Details.dgn