F.A.U. RTE.	SECTION	COUNTY	TOTAL SHEETS	SHEET NO.
6998	99-00209-02-PV	VERMILION	72	26
STA.		TO STA.		
FED. ROAD DIST. NO.	ILLINOIS	FED. AID PROJECT-		

CONTRACT NO.: 91356

*COST INCLUDED IN BRIDGE APPROACH PAVEMENT (SPECIAL)

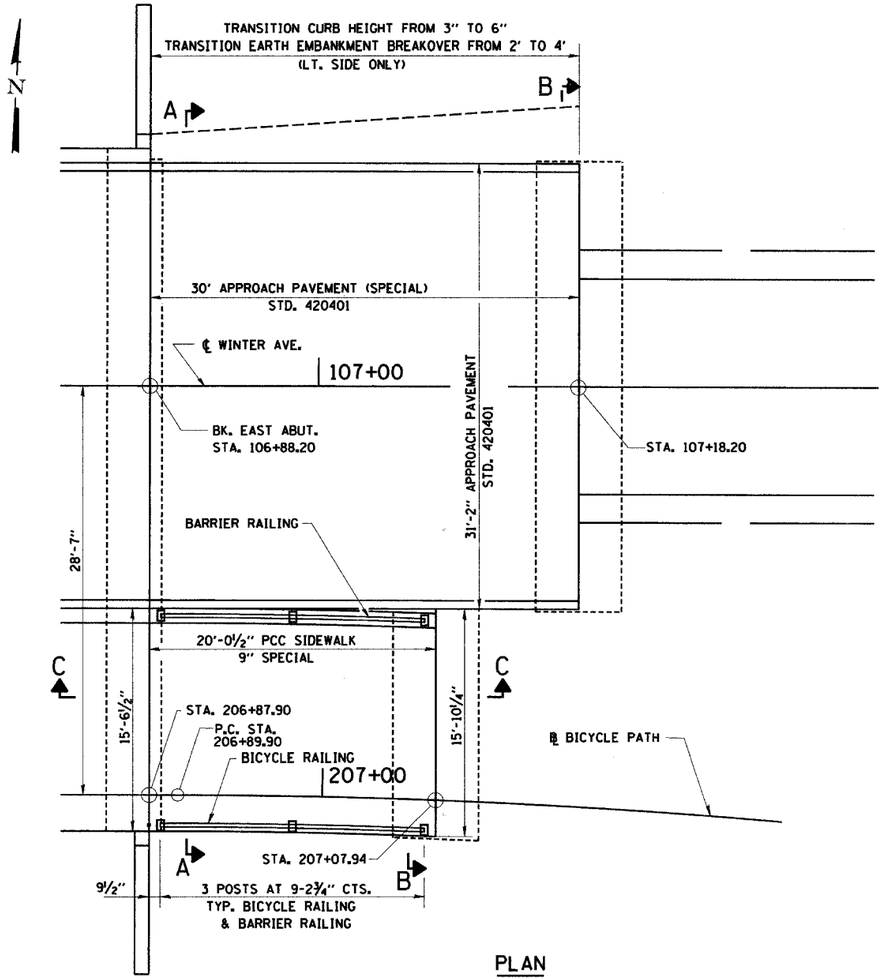

PLAN

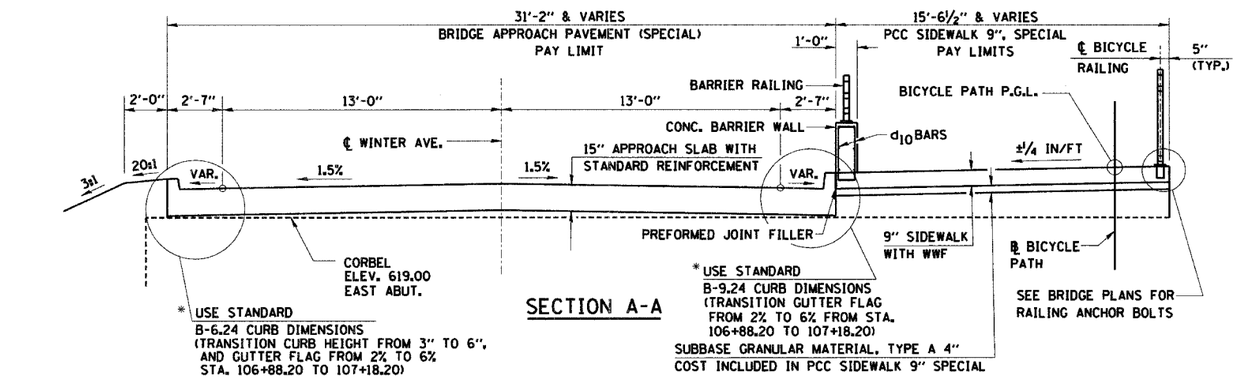

SECTION A-A

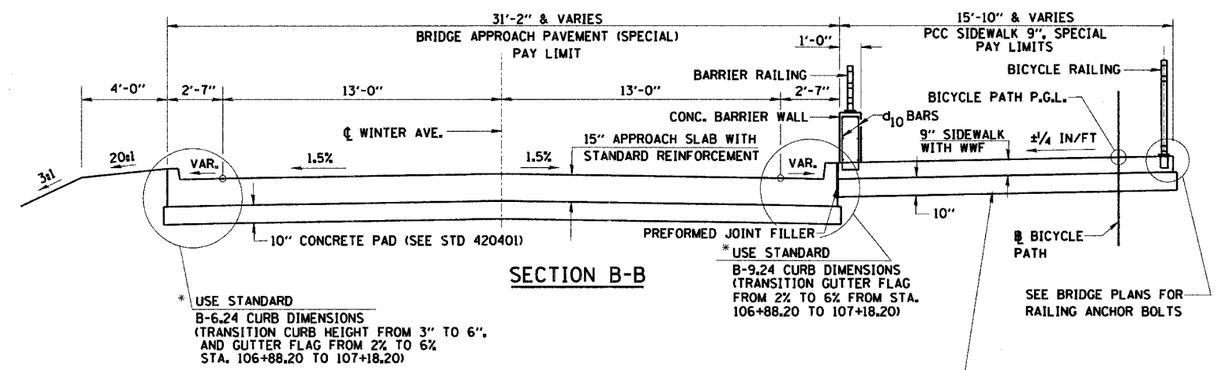

SECTION B-B

CONCRETE BARRIER WALL (EAST END) BILL OF MATERIAL

Bar	No.	Size	Length	Shape
d_{10}	28	#4	4'-2"	
h_{13}	12	#4	10'-8"	
* Reinforcement Bars, Epoxy Coated			Pound	160
* Concrete Structures			Cu. Yds.	1.7
* Protective Coat			Sq. Yds.	13
* Bicycle Railing			Foot	20

BARRIER RAILING SHALL NOT BE QUANTIFIED SEPERATELY BUT SHALL BE CONSIDERED INCLUDED IN THE INSTALLATION AND COST OF BICYCLE RAILING. (SEE SHEET 48 OF 72 FOR BARRIER RAILING AND BICYCLE RAILING DETAILS)

BAR d_{10} SHALL BE CAST IN PCC SIDEWALK 9", SPECIAL

* NOT A TOTAL QUANTITY. (FOR TOTAL QUANTITY ADD SIMILAR PAY ITEMS).

NOTES:

f'c = 3500 psi
fy = 60,000 psi (REINF.)

WORK THIS SHEET WITH BRIDGE PLANS.

AVOID REINFORCEMENT WHEN SPACING RAIL ANCHOR ASSEMBLY. SEE BRIDGE PLANS FOR RAIL ANCHOR DETAILS.

9" THICK SIDEWALK FROM STA. 206+87.90 TO 207+07.94 SHALL BE REINFORCED WITH WIRE FABRIC. 6" X 6" - W4.0 X W4.0 WEIGHING 58 LBS. PER 100 SQ. FT. COST INCLUDED WITH PCC SIDEWALK 9", SPECIAL.

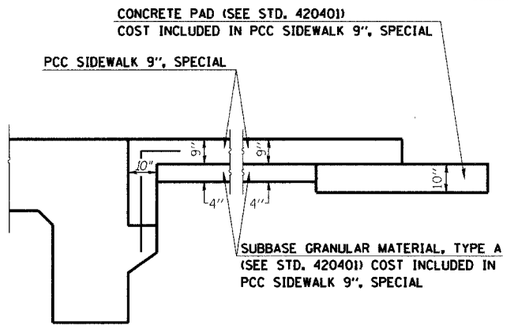

SECTION C-C
(SEE BRIDGE PLANS)

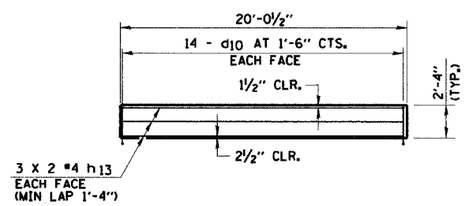

CONCRETE BARRIER WALL ELEVATION

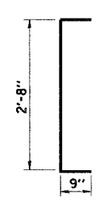

BAR d_{10}

REVISIONS	
NAME	DATE

CITY OF DANVILLE, ILLINOIS
WINTER AVENUE RECONSTRUCTION
BRIDGE APPROACH PAVEMENT &
BICYCLE PATH DETAILS
EAST END

SCALE: N.T.S. DATE: 12/30/05
DRAWN BY: ACW CHECKED BY:

PLAN	BY	DATE
SURVEYED		
PLATTED		
ALIGNMENT CHECKED		
PLATS WRITTEN		
PLATS CHECKED		
CADD FILE NAME		
NOTE BOOK NO.		