CONTRACT NO. 72A10

F.A.I. RTE.	SECTION	COUNTY	TOTAL SHEETS	SHEET NO.
55	------:------	SANGAMON	20	20A
STA. ---------- TO STA. ----------				
FED. ROAD DIST. NO. -	ILLINOIS	FED. AID PROJECT		

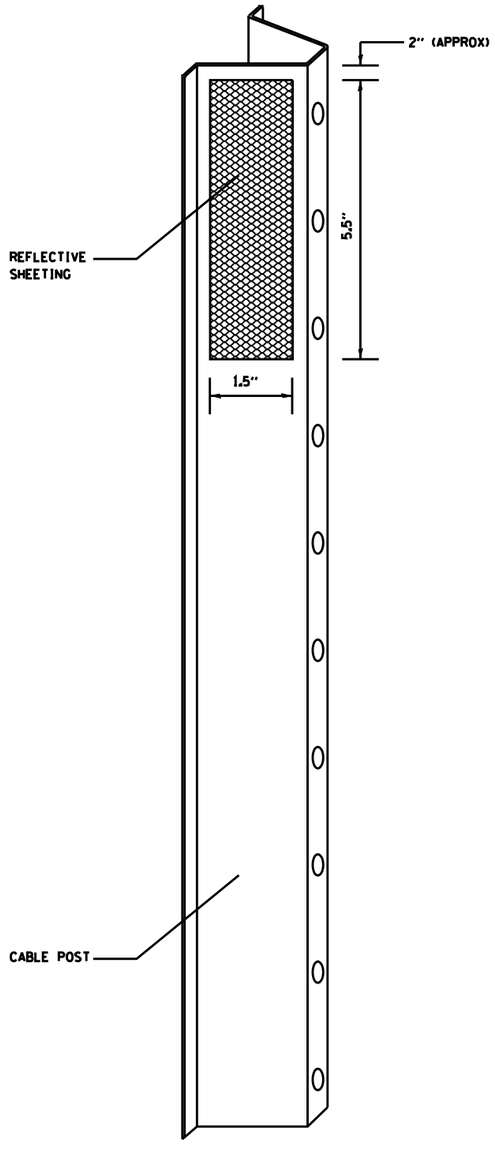

CABLE GUARD MARKER LOCATION			QUANTITY (EACH)
LOCATION A			
STA 259+84	TO	STA 288+00	72
STA 292+00	TO	STA 340+30	124
STA 340+39	TO	STA 341+96	4
STA 348+90	TO	STA 366+35	45
STA 367+40	TO	STA 381+20	35
LOCATION B			
STA 14+15	TO	STA 0+00	36
STA 167+20	TO	STA 252+09	218
STA 301+50	TO	STA 317+82	42
STA 321+67	TO	STA 363+60	108
STA 364+60	TO	STA 369+27	12
STA 211+42	TO	STA 225+50	36
			732

NOTES:

MATERIAL: THE MATERIAL SHALL BE IN ACCORDANCE WITH SECTION 1090 AND 1091 OF THE STANDARD SPECIFICATIONS.

CONSTRUCTION REQUIREMENTS: THE REFLECTIVE SHEETING SHALL BE INSTALLED DIRECTLY ON THE CABLE POSTS. THE REFLECTIVE SHEETING SHALL BE INSTALLED AS SHOWN IN THE PLANS, ON EVERY 6TH POST. THE SURFACE OF THE POST SHALL BE CLEANED OF ALL CONTAMINANTS PRIOR TO THE INSTALLATION OF THE REFLECTIVE SHEETING. THE SURFACE SHALL BE CLEANED USING A 5-8 PERCENT PHOSPHORIC ACID SOLUTION AND RINSED WITH CLEAN WATER OR AS RECOMMENDED BY THE MANUFACTURER OF THE REFLECTIVE SHEETING AND AS APPROVED BY THE ENGINEER.

BASIS OF PAYMENT: THIS WORK WILL BE PAID FOR AT THE CONTRACT UNIT PRICE EACH FOR CABLE GUARD MARKER.

REVISIONS	
NAME	DATE

ILLINOIS DEPARTMENT OF TRANSPORTATION

CABLE GUARD MARKER DETAIL

FAI 55 (I-55)
SECTION D-6 CABLE MED BAR #1
SANGAMON COUNTY

SCALE: VERT. HORIZ.
DATE
DRAWN BY
CHECKED BY

PLOT DATE : 2/14/2006
FILE NAME : C:\Documents and Settings\vessellr\Local Settings\Temporary Internet Files\OLK687\reflectorsdgn
PLOT SCALE : 100.0000 ' / IN.
PLOT BASE : Landscape
USER NAME : lvessellr