CONTRACT NO. 68325

F.A.U. RTE.	SECTION	COUNTY	TOTAL SHEETS	SHEET NO.
6659	*	PEORIA	40	22
STA.		TO STA.		
FED. ROAD DIST. NO.	ILLINOIS	FED. AID PROJECT		

*D4 BOX CULVERT EXT 2006

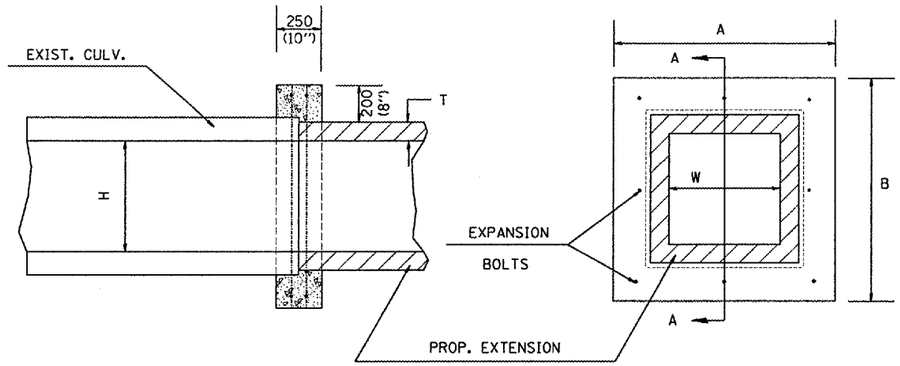

SECTION A - A

END VIEW

GENERAL NOTES

1. The collar shall be constructed entirely of CLASS SI CONCRETE and in accordance with the applicable portions of section 503 of the Standard Specifications. REINFORCEMENT BARS shall conform to section 508.

DIMENSIONS

EXISTING BOX		A	B	T *	EACH COLLAR			
					CL SI	REINFORCEMENT BARS		
W mm (ft)	H mm (ft)				m^3 (CU YD)	X	Y	kg (POUNDS)
1200(4)	900(3)	1.88m (6'-2")	1.57m (5'-2")	125(5")	0.31(0.41)	1.68m (5'-6")	838(33")	22(29)

All dimensions are in millimeters (inches) unless otherwise noted.

ILLINOIS DEPARTMENT OF TRANSPORTATION

DISTRICT CADD STANDARD

COLLAR FOR
BOX CULVERT
EXTENSIONS DETAIL

SCALE: NOT DRAWN TO SCALE

DRAWN BY CADD
CHECKED BY