STATE OF ILLINOIS
DEPARTMENT OF TRANSPORTATION

ROUTE NO.	SECTION	COUNTY	TOTAL SHEETS	SHEET NO.
78	(10BR-3)D & 11BR-8	JO DAVIESS	45	35
FED. ROAD DIST. NO. 7		ILLINOIS	FED. AID PROJECT=	

SHEET NO. 8
12 SHEETS

Contract # 64B27

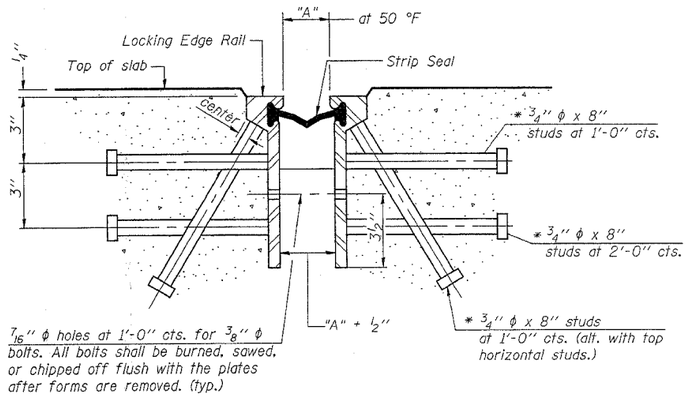

Required Strip Seal rated movement	"A"
1"	1 1/8"
2"	1 3/4"

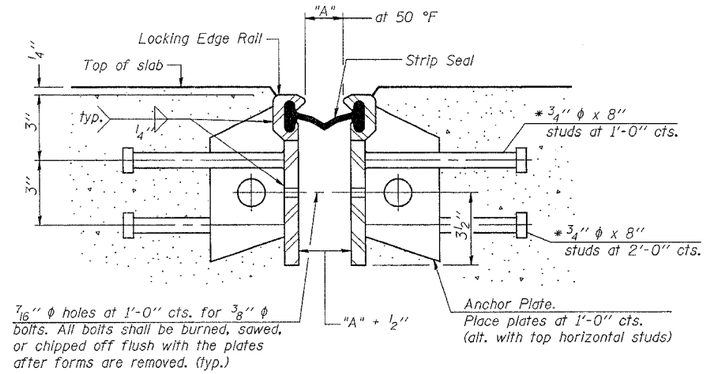

GENERAL NOTES

The strip seal shall be made continuous and shall have a minimum thickness of 1/4". The configuration of the strip seal shall match the configuration of the Locking Edge Rails.

The height and thickness of the Locking Edge Rails shown are minimum dimensions. The actual configuration of the Locking Edge Rails and matching strip seal may vary from manufacturer to manufacturer. Flanged edge rails will not be allowed.

Locking Edge Rails may be spliced at slope discontinuities and stage construction joints.

The manufacturer's recommended installation methods shall be followed.

The joint opening and deck dimensions detailed on the superstructure are based on a preformed joint seal. If the contractor elects to use the alternate strip seal joint, the opening and deck dimensions shall be modified according to the dimensions detailed on this sheet. Required modifications shall be made at no additional cost to the State.

SECTION THRU ROLLED RAIL EXP. JOINT

(186 Studs Required)

* Granular or solid flux filled headed studs conforming to Article 1006.32 of the Std. Specs., automatically end welded.

SECTION THRU WELDED RAIL EXP. JOINT

(112 Studs Required)
(74 Anchor Plates Required)

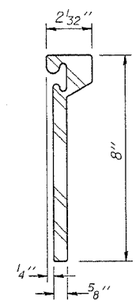

ROLLED (EXTRUDED) RAIL

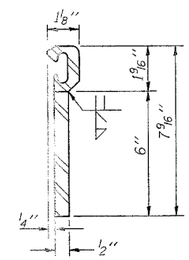

WELDED RAIL

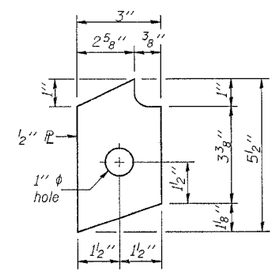

ANCHOR ℞
(for welded rail)

LOCKING EDGE RAILS

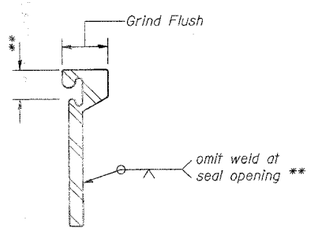

LOCKING EDGE RAIL SPLICE

The inside of the locking edge rail groove shall be free of weld residue.

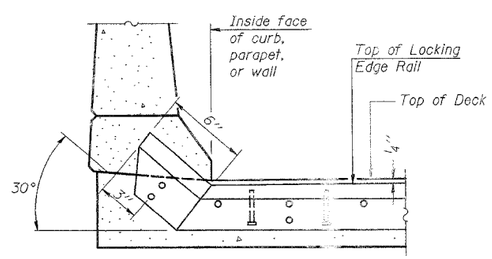

AT CURB, PARAPET, OR WALL

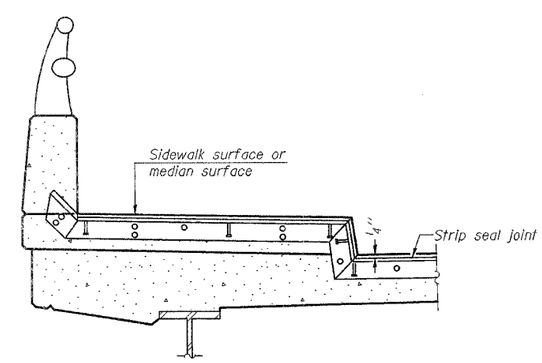

AT SIDEWALK OR MEDIAN*

* Shorter plates with a single row of studs at 12" centers may be necessary on medians which are shallower than 9". See manufacturer's recommendation.

TYPICAL END TREATMENTS

DESIGNED	CQM
CHECKED	EMM
DRAWN	CQM
CHECKED	EMM

EJ-BJS 10-22-04

- 200

EXAMINED
ENGINEER OF BRIDGE DESIGN

PASSED
ENGINEER OF BRIDGES AND STRUCTURES

(Sheet 2 of 2)

BRIDGE JOINT SYSTEM - EXPANSION
(ALTERNATE-STRIP SEAL)

IL. RTE. 78 OVER
DAVIS CREEK
F.A. 642 SECTION (10BR-3)D & 11BR-8
JO DAVIESS COUNTY
STA. 20+75.37
STRUCTURE NUMBER 043-0042

DATE : 12-21-05

derfc1b 12/23/2005 10:24:18 AM K:\structure\11_RTE 78\DAVIS CREEK\SHEETS FILE:DAVISVRSDE EXP112.dgn