STATE OF ILLINOIS
DEPARTMENT OF TRANSPORTATION

ROUTE NO.	SECTION	COUNTY	TOTAL SHEETS	SHEET NO.
78	(10BR-3)D & 11BR-8	JO DAVIESS	45	23
FED. ROAD DIST. NO. 7		ILLINOIS	FED. AID PROJECT-	

SHEET NO. 5
9 SHEETS

Contract # 64B27

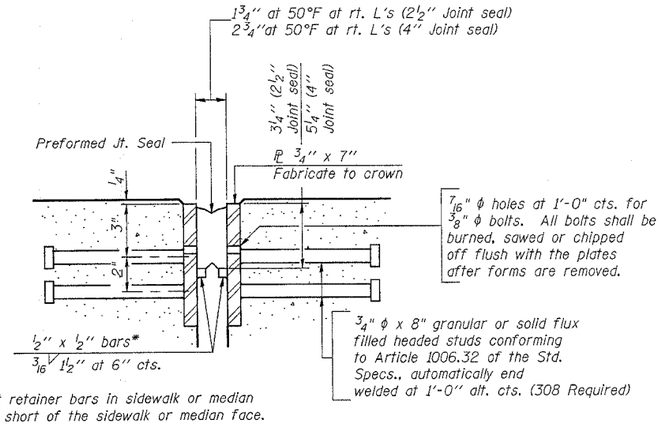

*Cut retainer bars in sidewalk or median 6" short of the sidewalk or median face.

SECTION THRU EXPANSION JOINT

(2 1/2" and 4" joint seals)

Bridge Joint System (Expansion)		
Design Movement	Required Preformed Joint Seal Size	Required Strip Seal Rated movement
1"	2 1/2"	1"
1 5/8"	4"	2"

GENERAL NOTES

Furnish steel plates in segments of 20 feet maximum length. Maximum space between installed segments shall be 3/16". Seal space with silicone sealant suitable for structural steel.

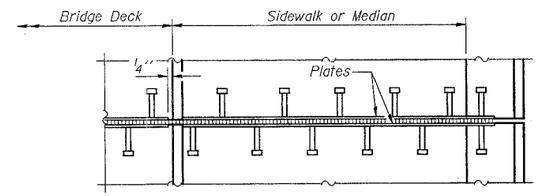

PLAN AT SIDEWALK OR MEDIAN

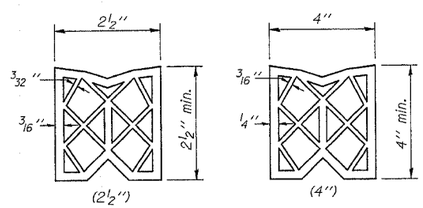

PREFORMED JOINT SEAL

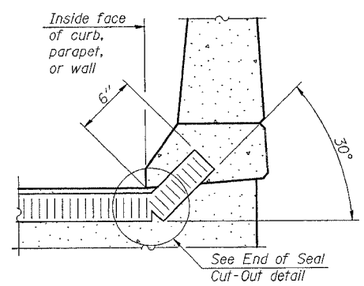

AT CURB, PARAPET, OR WALL

(Showing seal)

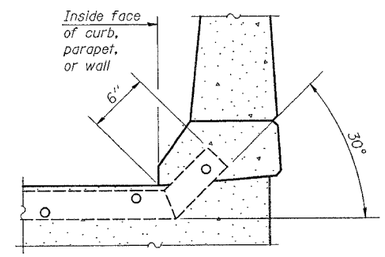

AT CURB, PARAPET, OR WALL

(Showing plate)

TYPICAL END TREATMENTS

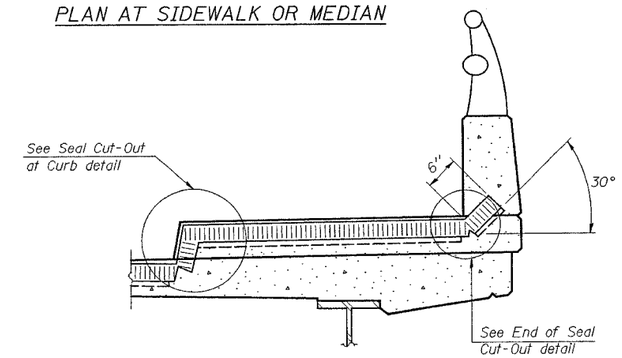

AT SIDEWALK OR MEDIAN*

(Showing plate and seal)

* Shorter plates with a single row of studs at 12" centers may be necessary on medians which are shallower than 9". See manufacturer's recommendation.

BILL OF MATERIAL

Item	Unit	Total
Bridge Joint System (Expansion) -1"	foot	74.6

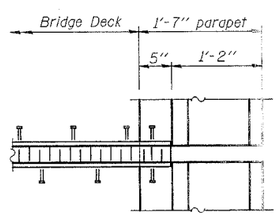

PLAN AT PARAPET

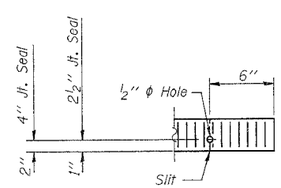

END OF SEAL CUT-OUT

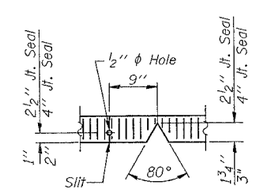

SEAL CUT-OUT AT CURB

(Sheet 1 of 2)

BRIDGE JOINT SYSTEM - EXPANSION (PREFORMED JOINT SEAL)

IL. RTE. 78 OVER
PLUM RIVER
F.A. 642 SECTION (10BR-3)D & 11BR-8
JO DAVIESS COUNTY
STA. 318+36.71.00
STRUCTURE NUMBER 043-0040

DATE : 12-21-05

DESIGNED JPM	
CHECKED EMM	
DRAWN JPM	
CHECKED EMM	

EJ-BJS

200
EXAMINED
ENGINEER OF BRIDGE DESIGN
PASSED
ENGINEER OF BRIDGES AND STRUCTURES

default
12/23/2005 11:19:15 AM K:\structural\IL RTE 78 oVER PLUM RIVER\SHEETS FILE\PLUMVBRL.EXJ11.dgn