FAS RTE.	SECTION	COUNTY	TOTAL SHEETS	SHEET NO.
171	17-00802-00-BR	LASALLE	93	1
	17-00142-00-BR	KENDALL		
WHA* 1087J17	ILLINOIS	FED. AID PROJECT WZPE(199)	CONTRACT NO. 87683	

INDEX OF SHEETS

STANDARDS

000001-06	STANDARD SYMBOLS, ABBREVIATIONS, AND PATTERNS
001001-02	AREAS OF REINFORCEMENT BARS
280001-07	TEMPORARY EROSION CONTROL SYSTEMS
701006-05	OFF-RD OPERATIONS, 2L, 2W, 15' (4.5 m) TO 24" (600 mm) FROM PAVEMENT EDGE
701201-04	LANE CLOSURE, 2L, 2W, DAY ONLY, FOR SPEEDS ≥ 45 MPH
701301-04	LANE CLOSURE, 2L, 2W, SHORT TIME OPERATIONS
701901-07	TRAFFIC CONTROL DEVICES
720001-01	SIGN PANEL MOUNTING DETAILS
BLR 21-9	TYPICAL APPLICATION OF TRAFFIC CONTROL DEVICES FOR CONSTRUCTION ON RURAL LOCAL HIGHWAYS
BLR 22-7	TYPICAL APPLICATION OF TRAFFIC CONTROL DEVICES FOR CONSTRUCTION ON RURAL LOCAL HIGHWAYS

STATE OF ILLINOIS
DEPARTMENT OF TRANSPORTATION
DIVISION OF HIGHWAYS

PLAN FOR PROPOSED FEDERAL AID PROJECT SURFACE TRANSPORTATION RURAL – BRIDGE (FY–18)

FAS 171 (CH 3 – MILLINGTON RD) OVER FOX RIVER
STRUCTURE REHABILITATION
SECTION 17–00802–00–BR
LASALLE COUNTY
SECTION 17–00142–00–BR
KENDALL COUNTY
PROJECT WZPE(199)
C–93–037–18

LOCATION OF SECTION INDICATED THUS:–

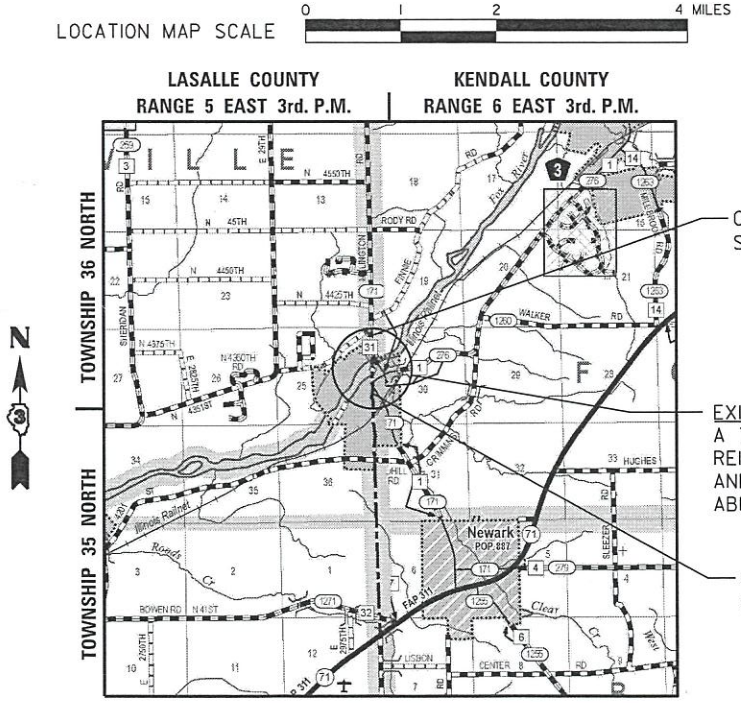

CONSTRUCTION ENDS
STATION 22+45

EXISTING STRUCTURE: S.N. 047-3000
A THREE SPAN (148'-10":150'-0":148'-10")
REINFORCED CONCRETE DECK ON RIVETED ℙ GIRDERS
AND MASONRY PIERS AND CLOSED MASONRY
ABUTMENTS AT STA. 20+00. NO SKEW.

CONSTRUCTION BEGINS
STATION 13+95

GROSS LENGTH = 850 FT. = 0.161 MILE
NET LENGTH = 850 FT. = 0.161 MILE

MICHAEL A. HIELSBERG
62-046214

DATE: 12/19/2017
EXPIRES 11/30/19

LASALLE COUNTY HIGHWAY DEPARTMENT

APPROVED 12-19 2017

LASALLE COUNTY ENGINEER

KENDALL COUNTY HIGHWAY DEPARTMENT

APPROVED December 19, 2017

KENDALL COUNTY ENGINEER

PASSED 1/5/18 ~~2017~~

DISTRICT 3 LOCAL ROADS AND STREETS ENGINEER

RELEASING FOR BID
BASED ON LIMITED
REIVEW 1/5/18 ~~2017~~

REGION 2 ENGINEER

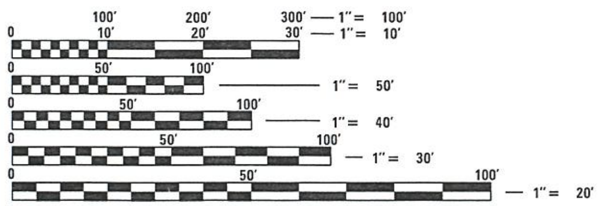

FULL SIZE PLANS HAVE BEEN PREPARED USING STANDARD ENGINEERING SCALES. REDUCED SIZED PLANS WILL NOT CONFORM TO STANDARD SCALES. IN MAKING MEASUREMENTS ON REDUCED PLANS, THE ABOVE SCALES MAY BE USED.

J.U.L.I.E.
JOINT UTILITY LOCATION INFORMATION FOR EXCAVATION
1–800–892–0123
OR 811

PROJECT ENGINEER – PLP
PROJECT MANAGER – BKC
CONTRACT 87683

FUNCTIONAL CLASSIFICATION
COLLECTOR
DESIGN SPEED 50 MPH
2018 ADT – 1,719
3R GUIDELINES

WILLETT HOFMANN
& ASSOCIATES INC
ENGINEERING ARCHITECTURE LAND SURVEYING
809 EAST 2ND STREET, DIXON, IL 61021-0367
T: 815-284-3381 DESIGN FIRM: #184-000918

FILE = S:\PROJECTS\2017\1087J17_KCH\DESIGN\CAD_SHEETS\1087J17_Cover Sheet.dgn

GENERAL NOTES

EXISTING STRUCTURES (INCLUDING FOUNDATIONS, WALLS, CISTERNS, WELLS, OR OTHER UNDERGROUND STRUCTURES) WITHIN THE RIGHT OF WAY SHALL BE REMOVED IN ACCORDANCE WITH ARTICLE 501.04 AND 501.05 OF THE STANDARD SPECIFICATIONS, WITHOUT ADDITIONAL COMPENSATION, UNLESS OTHERWISE NOTED IN THE PLANS OR SPECIAL PROVISIONS.

THE FINAL TOP FOUR INCHES OF SOIL IN ANY RIGHT-OF-WAY AREA DISTURBED BY THE CONTRACTOR MUST BE A COHESIVE SOIL CAPABLE OF SUPPORTING VEGETATION.

WHERE SECTION OR SUBSECTION MONUMENTS ARE ENCOUNTERED, THE ENGINEER SHALL BE NOTIFIED BEFORE SUCH MONUMENTS ARE REMOVED. THE CONTRACTOR SHALL PROTECT AND CAREFULLY PRESERVE ALL PROPERTY MARKERS, MONUMENTS, AND RIGHT OF WAY PINS UNTIL THE OWNER, AN AUTHORIZED SURVEYOR, OR AGENT HAS WITNESSED OR OTHERWISE REFERENCED THEIR LOCATION.

THE LOCATION AND ELEVATION OF THE UNDERGROUND UTILITIES AS SHOWN ON THE PLANS ARE NOT TO BE TAKEN AS EXACT. THE CONTRACTOR SHALL USE SPECIAL CARE WHEN CONDUCTING CONSTRUCTION OPERATIONS NEAR THEM TO PREVENT DAMAGE.

ALL CONSTRUCTION MATERIALS WITHIN THE COUNTY ROW MUST BE IDOT CERTIFIED. DOCUMENTATION OF MATERIAL CERTIFICATION SHALL BE SUBMITTED PRIOR TO ENGINEER APPROVAL. ALL CONSTRUCTION MATERIAL NEEDING INSPECTION SHALL BE DONE ACCORDING TO THE LATEST IDOT PROJECT AND PROCEDURES GUIDE.

1. A LIST OF MATERIALS USED.
2. COPIES OF ALL IDOT MATERIAL CERTIFICATION ASSOCIATED WITH EACH MATERIAL USED.
3. A SIGNED COPY OF ALL MATERIAL TESTING COMPANY RESULTS ON A WEEKLY BASIS. WEEKLY FIELD REPORTS SHALL BE PROVIDED ON THE APPROPRIATE IDOT FORM.
4. A CERTIFICATION LETTER THAT CERTIFIES COMPLIANCE WITH THE PLANS AND SPECIFICATIONS.

THE STANDARD SPECIFICATIONS FOR ROAD AND BRIDGE CONSTRUCTION, ADOPTED APRIL 1, 2016 BY THE ILLINOIS DEPARTMENT OF TRANSPORTATION SHALL GOVERN THE CONSTRUCTION OF THE IMPROVEMENTS.

IN THESE CONTRACT DOCUMENTS MENTION IS MADE OF THE "ENGINEER", WHICH SHALL MEAN WILLETT, HOFMANN & ASSOCIATES, INC. OR THEIR DULY AUTHORIZED AGENT.

THE PROPOSED IMPROVEMENTS MUST BE CONSTRUCTED IN ACCORDANCE WITH THE ENGINEERING PLANS AS APPROVED BY THE OWNER. THE CONSTRUCTION DETAILS, AS PRESENTED ON THESE PLANS MUST BE FOLLOWED BY THE CONTRACTOR; IMPROVEMENT REPRESENTATIONS AS SHOWN ARE AS ACCURATE AS POSSIBLE FROM THE INFORMATION AVAILABLE. HOWEVER, SOME FIELD REVISIONS MAY BE REQUIRED TO ACCOMMODATE UNFORESEEN CIRCUMSTANCES. THE ENGINEER SHALL BE ADVISED OF ANY NECESSARY REVISIONS WITH SUFFICIENT LEAD TIME ALLOWED TO PROPERLY CONSIDER AND ACT UPON SAID REQUESTS. PROPER CONSTRUCTION TECHNIQUES MUST BE FOLLOWED IN CONSTRUCTING THOSE IMPROVEMENTS AS DETAILED IN THIS ENGINEERING PLAN. EXTREME CAUTION MUST BE EXERCISED REGARDING THE COMPACTION OF ALL UTILITY TRENCHES.

THE CONTRACTOR SHALL CAREFULLY PRESERVE ALL PROPERTY MARKS, SECTION OR SUBSECTION MONUMENTS ENCOUNTERED, UNTIL AN OWNER OR AUTHORIZED SURVEYOR OR AGENT HAS WITNESSED OR OTHERWISE REFERENCED THEIR LOCATION. ANY PROPERTY MARKS, SECTION OR SUBSECTION MONUMENTS UNLESS REFERENCED, DAMAGED BY THE CONTRACTOR SHALL BE REPLACED AT THE EXPENSE OF THE CONTRACTOR.

THE LOCATION AND ELEVATION OF UNDERGROUND UTILITIES AS SHOWN ON THE PLANS ARE NOT TO BE TAKEN AS EXACT. THE CONTRACTOR SHALL VERIFY AND LOCATE ALL EXISTING UTILITIES ON OR ADJACENT TO THE SITE. PRIOR TO BEGINNING CONSTRUCTION ACTIVITIES, CONTACT J.U.L.I.E. AT 1-800-892-0123 FOR EXACT FIELD LOCATION OF UTILITIES. THE CONTRACTOR SHALL USE SPECIAL CARE WHEN CONDUCTING CONSTRUCTION OPERATIONS NEAR THEM TO PREVENT DAMAGE. DAMAGE, AND THE COST TO REPAIR SAID DAMAGE, SHALL BE THE SOLE RESPONSIBILITY OF THE CONTRACTOR.

SAW CUTTING AS STATED ON THE PLANS OR AS DIRECTED BY THE ENGINEER, SHALL RESULT IN A NEAT, STRAIGHT LINE WITH NO DAMAGE TO THE EXISTING SURFACE. ANY DAMAGE TO THE EXISTING SURFACE SHALL BE REPAIRED AT THE CONTRACTOR'S EXPENSE. METHOD OF REPAIR SHALL BE APPROVED BY THE ENGINEER. COST FOR SAW CUTTING SHALL BE INCIDENTAL TO THE CONTRACT.

EXISTING PRIVATE SIGNS, STREET SIGNS, OR TRAFFIC SIGNS THAT ARE WITHIN THE PROJECT CONSTRUCTION LIMITS AND ARE REQUIRED TO BE RELOCATED, SHALL BE REMOVED AND REPLACED BY THE CONTRACTOR IN ACCORDANCE WITH ARTICLE 107.25 OF THE STANDARD SPECIFICATIONS.

UTILITY CONTACT INFORMATION

AMEREN ILLINOIS
ATTN: DANIEL KLEIN
340 RACCUGLIA DR.
LASALLE, IL 61301
815-224-6239

AT&T DISTRIBUTION
ATTN: STEVEN PESOLA
E-MAIL: SP9653@ATT.COM
(630) 573-5703 (OFFICE)
(815) 412-5255 (MOBILE)

COMCAST
ATTN: THOMAS MUNAR
688 INDUSTRIAL DRIVE
ELMHURST, ILLINOIS 60126
(630) 600-6316

FRONTIER COMMUNICATION (NORTH)
ATTN: KALIN HINSHAW
112 ELM STREET
SYCAMORE, ILLINOIS 60178
(815) 895-1515

MEDIACOM
ATTN: CHRIS MINARD
6925 GARDEN PRAIRIE RD.
GARDEN PRAIRIE IL 61038
(815) 716-0582

NICOR GAS
ATTN: BRUCE KOPPANG
1844 FERRY ROAD
NAPERVILLE, IL 60563
(630) 388-3830

HORIZONTAL CONTROL

GPS CONTROL POINT #	LASALLE COUNTY FAS 171 (CH 3 - MILLINGTON RD) OVER FOX RIVER STATION 20+00			
	LOCATION	N	E	DESCRIPTION
1	20.2' LT 14+43.06 (MILLINGTON RD.)	1,784,923.505	911,744.387	PK NAIL
2	17.05' RT 17+27.69 (MILLINGTON RD.)	1,785,174.526	911,602.984	5/8" I.P.
3	17.63' RT 22+51.10 (MILLINGTON RD.)	1,785,606.531	911,308.226	5/8" I.P.
4	19.62' LT 26+50.80 (MILLINGTON RD.)	1,785,950.391	911,103.253	5/8" I.P.

VERTICAL CONTROL

LASALLE COUNTY FAS 171 (CH 3 - MILLINGTON RD) OVER FOX RIVER STATION 20+00		
BM #	LOCATION AND DESCRIPTION	ELEV.
400	RR SPIKE IN UTILITY POLE, E. SIDE OF BRIDGE ST. AND RACE ST.	552.97
401	DISK ON S.E. CORNER OF BRIDGE STRUCTURE	564.78
402	CHIS "□" ON N.E. WINGWALL OF BRIDGE STRUCTURE	564.99
403	LEG BOLT IN LIGHT POLE, N.W. CORNER OF MILLINGTON RD. & BELLE RIVE DR.	576.83

COMMITMENTS

THE CONTRACTOR SHALL ADHERE TO THE SPECIAL CONDITIONS SET FORTH IN THE ILLINOIS DEPARTMENT OF NATURAL RESOURCES AND DEPARTMENT OF THE ARMY PERMITS INCLUDING THE FOLLOWING:

1. THE CONTRACTOR IS ENCOURAGED TO CONDUCT CONSTRUCTION ACTIVITIES DURING PERIODS OF LOW FLOW.
2. ALL TREE CLEARING MUST TAKE PLACE BETWEEN OCTOBER 1ST AND MARCH 31ST.
3. THE MAXIMUM TOP ELEVATION OF THE CAUSEWAYS SHALL NOT EXCEED THE ELEVATIONS SHOWN ON THE APPROVED PLANS.
4. CAUSEWAYS SHALL BE REMOVED SHOULD RISING RIVER LEVELS EXCEED AN ELEVATION OF 545.0.
5. ALL TEMPORARY CONSTRUCTION SHALL BE REMOVED FROM THE FOX RIVER WHEN CONSTRUCTION HAS BEEN COMPLETED.
6. CONTRACTOR SHALL SEED OR REPLANT ALL DISTURBED AREAS WITH NATIVE VEGITATION AND TREES.
7. CONTRACTOR SHALL IMPLEMENT APPROPRIATE MEASURES TO INSURE THAT SEDIMENTS ARE NOT INTRODUCED INTO THE WATERS OF THE UNITED STATES DURING CONSTRUCTION.

SUMMARY OF QUANTITIES

	CODE NO.	ITEM	UNIT	SOUTH ACCESS QUANTITY	NORTH ACCESS ** QUANTITY	BRIDGE (CH3 - MILLINGTON RD) QUANTITY	TOTAL CONSTRUCTION CODE: 0013 QUANTITY
Δ	20100110	TREE REMOVAL (6 TO 15 UNITS DIAMETER)	UNIT	46	22	53	121
Δ	20100210	TREE REMOVAL (OVER 15 UNITS DIAMETER)	UNIT	112	20	50	182
	20201200	REMOVAL AND DISPOSAL OF UNSUITABLE MATERIAL	CU YD	100			100
Δ	25100630	EROSION CONTROL BLANKET	SQ YD	1,803	1,296	205	3,304
	28000400	PERIMETER EROSION BARRIER	FOOT	1,129	273		1,402
*	50102400	CONCRETE REMOVAL	CU YD			194.9	194.9
	50200300	COFFERDAM EXCAVATION	CU YD			69	69
	50201121	COFFERDAM (TYPE 2) (LOCATION - 1)	EACH			1	1
	50201122	COFFERDAM (TYPE 2) (LOCATION - 2)	EACH			1	1
	50201123	COFFERDAM (TYPE 2) (LOCATION - 3)	EACH			1	1
	50201124	COFFERDAM (TYPE 2) (LOCATION - 4)	EACH			1	1
	50300225	CONCRETE STRUCTURES	CU YD			214	214
*	50300265	SEAL COAT CONCRETE	CU YD			72.5	72.5
*	50500405	FURNISHING AND ERECTING STRUCTURAL STEEL	POUND			2,912	2,912
	50500505	STUD SHEAR CONNECTORS	EACH			716	716
	50800205	REINFORCEMENT BARS, EPOXY COATED	POUND			57,210	57,210
	51202100	FURNISHING STEEL PILES HP14X117	FOOT			1,634	1,634
	51202305	DRIVING PILES	FOOT			1,634	1,634
	51204100	TEST PILE STEEL HP14X117	EACH			2	2
	51204650	PILE SHOES	EACH			28	28
	52100530	ANCHOR BOLTS, 1 1/4"	EACH			32	32
Δ*	63302700	REMOVE AND REERECT TRAFFIC BARRIER TERMINALS, TYPE 6	EACH			1	1

Δ SPECIALTY ITEMS
* SEE SPECIAL PROVISIONS

** ESTIMATED QUANTITIES TO BE PAID ONLY IF PIER ACCESS OPTION 2 IS CONSTRUCTED
SEE SPECIAL PROVISIONS FOR PAYMENT INFORMATION AND EXPLANATION OF OPTIONS

FILE = S:\PROJECTS\2017\1087J17_KCH\DESIGN\CAD_SHEETS\1087J17_S00 Sheets.dgn

WILLETT HOFMANN & ASSOCIATES INC
ENGINEERING ARCHITECTURE LAND SURVEYING
609 EAST 2ND STREET DIXON, IL 61021-0367
T: 815-284-3381 DESIGN FIRM #184-000918

DESIGNED - MAH	REVISED -		
CHECKED - GFS	REVISED -		
DRAWN - MAH	REVISED -		
CHECKED - GFS	REVISED -		

LASALLE & KENDALL COUNTY
FAS 171(CH 3–MILLINGTON RD) OVER FOX RIVER
STATION 20+00

SUMMARY OF QUANTITIES

SHEET NO. 1 OF 2 SHEETS

FAS RTE.	SECTION	COUNTY	TOTAL SHEETS	SHEET NO.
171	17-00802-00-BR	LASALLE	93	3
	17-00142-00-BR	KENDALL		

WHA* 1087J17 ILLINOIS FED. AID PROJECT WZPE(199) CONTRACT NO. 87683

SUMMARY OF QUANTITIES

	CODE NO.	ITEM	UNIT	SOUTH ACCESS QUANTITY	NORTH ACCESS ** QUANTITY	BRIDGE (CH3 - MILLINGTON RD) QUANTITY	TOTAL CONSTRUCTION CODE: 0013 QUANTITY
	6700050	ENGINEER's FIELD OFFICE, TYPE B	CAL MO			6	6
	67100100	MOBILIZATION	L SUM			1	1
*	Z0001899	JACK AND REMOVE EXISTING BEARINGS	EACH			8	8
*	Z0012755	STRUCTURAL REPAIR OF CONCRETE (DEPTH GREATER THAN 5 INCHES)	SQ FT			4	4
*	Z0013798	CONSTRUCTION LAYOUT	L SUM			1	1
*	Z0015500	DEBRIS REMOVAL	L SUM			1	1
*	Z0073410	TEMPORARY SUPPORT SYSTEM, LOCATION 1	EACH			1	1
*	Z0073420	TEMPORARY SUPPORT SYSTEM, LOCATION 2	EACH			1	1
Δ	A2001316	TREE, ACER SACCHARINUM (SILVER MAPLE), 2" CALIPER, BALLED AND BURLAPPED	EACH	2			2
*	X0327039	TEMPORARY ACCESS ROAD (SPECIAL)	L SUM	1			1
*	X0327286	SUBSTRUCTURE REPAIR (GROUT BAGS)	L SUM			1	1
*	X2020410	EARTH EXCAVATION, SPECIAL	CU YD	441	289		730
*	X2070302	POROUS GRANULAR EMBANKMENT, SPECIAL ***	TON	3,043 ***	1,883 ***		4,926 ***
Δ *	X2501000	SEEDING, CLASS 2 (SPECIAL)	ACRE	0.25	0.27	0.04	0.56
Δ *	X2501750	SEEDING, CLASS 4 (SPECIAL)	ACRE	0.12			0.12
Δ *	X2501845	SEEDING, CLASS 7 (SPECIAL)	ACRE	0.13	0.12		0.25
*	X2810210	STONE RIPRAP, CLASS A5 (SPECIAL)	TON			900	900
*	X4023000	TEMPORARY ACCESS (ROAD)	EACH	1	1		1
*	X4400220	CURB REMOVAL AND REPLACEMENT	FOOT			25	25
*	X7010216	TRAFFIC CONTROL AND PROTECTION (SPECIAL)	L SUM			1	1

Δ SPECIALTY ITEMS

* SEE SPECIAL PROVISIONS

** ESTIMATED QUANTITIES TO BE PAID ONLY IF PIER ACCESS OPTION 2 IS CONSTRUCTED
SEE SPECIAL PROVISIONS FOR PAYMENT INFORMATION AND EXPLANATION OF OPTIONS

*** POROUS GRANULAR EMBANKMENT, SPECIAL

ACCESS BOTH PIERS FROM SOUTH SIDE OF RIVER (CAUSEWAY OPTION 1)		ESTIMATED QUANTITY FOR PAYMENT (TON)
CAUSEWAY	- STA. 1005+50.57 - 1007+83.59	965
SIDE SPUR (SOUTH PIER)		357
CAUSEWAY	- STA. 1007+83.59 - 1009+33.76	1,221
SIDE SPUR (NORTH PIER)		500
		3,043

ACCESS SOUTH PIER FROM SOUTH SIDE OF RIVER & NORTH PIER FROM NORTH SIDE OF RIVER (CAUSEWAY OPTION 2)		ESTIMATED QUANTITY CHANGE FROM OPTION 1 (TON)
CAUSEWAY	- STA. 1005+50.57 - 1007+83.59	+ 285
SIDE SPUR (SOUTH PIER)		+ 117
CAUSEWAY	- STA. 1007+83.59 - 1009+33.76	- 1,221
SIDE SPUR (NORTH PIER)		- 500
CAUSEWAY	- STA. 6002+25.00 - 6004+51.32	+ 2,341
SIDE SPUR (NORTH PIER)		+ 861
		+ 1,883 (TO BE PAID ONLY IF CAUSEWAY OPTION 2 IS CONSTRUCTED)

SCHEDULE OF QUANTITIES

NOTE: SEE SPECIAL PROVISIONS FOR BID AND PAYMENT INFORMATION

EARTHWORK SCHEDULE

LOCATION	EARTH EXCAVATION (SPECIAL) X2020410 (CY)	EXCAVATION ADJUSTED FOR SHRINKAGE 25%	EMBANKMENT	EARTHWORK BALANCE
CAUSEWAY (OPTION 1)				
CAUSEWAY STA. 1005+50.55 - 1007+83.59	136	102	0	102
ACCESS RD (SOUTH) AGGREGATE SURFACE COURSE REMOVAL	305			
TOTAL	441	102	0	102
CAUSEWAY (OPTION 2)				
CAUSEWAY STA. 6002+25.00 - 6004+51.32	89	67	0	67
ACCESS RD (NORTH) AGGREGATE SURFACE COURSE REMOVAL	200			
TOTAL	289	67	0	67
TOTAL	730	169	0	169

TREE REMOVAL (6 TO 15 UNIT DIAMETER)

STATION	UNIT	REMARKS
ACCESS RD (SOUTH)		
10' RT 1002+39	14	
8' RT 1002+54	7	
9' RT 1002+65	12	
12' LT 1002+92	6	
12' RT 1002+92	7	
SUB-TOTAL	46	
ACCESS RD (NORTH)		
6' LT 6000+32	10	
26' RT 6000+52	12	
SUB-TOTAL	22	
CH 3 (MILLINGTON RD.)		
30' LT 17+32	8	
60' RT 22+10	6	
42' RT 22+15	8	
41' RT 22+16	6	
42' RT 22+17	7	
60' RT 22+20	12	
33' RT 22+22	6	
SUB-TOTAL	53	
PROJECT TOTAL	121	

20100110

TREE REMOVAL (OVER 15 UNIT DIAMETER)

STATION	UNIT	REMARKS
ACCESS RD (SOUTH)		
11' RT 1001+33	28	
11' RT 1004+32	32	
SUB-TOTAL	60	
CAUSEWAY OPTION 1		
0' RT 1005+92	18	
4' RT 1006+23	34	
SUB-TOTAL	52	
ACCESS RD (NORTH)		
5' RT 6000+09	20	
SUB-TOTAL	20	
CH 3 (MILLINGTON RD.)		
29' LT 17+33	20	
37' RT 22+29	30	
SUB-TOTAL	50	
PROJECT TOTAL	182	

20100210

REMOVAL AND DISPOSAL OF UNSUITABLE MATERIAL

STATION	CU YD	REMARKS
ENTIRE PROJECT	100	
PROJECT TOTAL	100	

20201200

EROSION CONTROL BLANKET

STATION	SQ YD	REMARKS
ACCESS RD (SOUTH)		
RT & LT 1000+48 - 1006+80	1,803	
ACCESS RD (NORTH)		
RT & LT 6000+00 - 6002+49	1,296	
CH 3 (MILLINGTON RD.)		
RT 22+21 - 24+05	205	
PROJECT TOTAL	3,304	

25100630

PERIMETER EROSION BARRIER

STATION	FOOT	REMARKS
ACCESS RD (SOUTH)		
RT 1000+47 - 1005+92	592	
LT 1000+49 - 1006+47	537	
SUB-TOTAL	1,129	
ACCESS RD (NORTH)		
RT 6000+00 - 6001+75	186	
LT 6000+10 - 6001+75	87	
SUB-TOTAL	273	
PROJECT TOTAL	1,402	

28000400

REMOVE AND REERECT TRAFFIC BARRIER TERMINALS, TYPE 6

STATION	EACH	REMARKS
CH 3 (MILLINGTON RD.)		
LT 17+35	1	
PROJECT TOTAL	1	

63302700

TREE, ACER SACCHARINUM (SILVER MAPLE) 2" CALIPER, BALLED AND BURLAPPED

STATION	EACH	REMARKS
ACCESS RD (SOUTH)		
104+32 - 1006+00	2	WITHIN FORESTED WETLAND AREA
PROJECT TOTAL	2	

A2001316

SEEDING, CLASS 2 (SPECIAL)

STATION	ACRE	REMARKS
ACCESS RD (SOUTH)		
1000+35.72 - 1004+87	0.25	
ACCESS RD (NORTH)		
6000+00 - 6002+49	0.27	
CH 3 (MILLINGTON RD.)		
RT 22+21 - 24+05	0.04	
PROJECT TOTAL	0.56	

X2501000

SEEDING, CLASS 4 (SPECIAL)

STATION	ACRE	REMARKS
ACCESS RD (SOUTH)		
1004+32 - 1006+80	0.12	
PROJECT TOTAL	0.12	

X2501750

SEEDING, CLASS 7 (SPECIAL)

STATION	ACRE	REMARKS
ACCESS RD (SOUTH)		
LT & RT 1000+35.72 - 1006+00	0.13	
ACCESS RD (NORTH)		
LT & RT 6000+00 - 6002+49	0.12	
PROJECT TOTAL	0.25	

X2501845

CURB REMOVAL AND REPLACEMENT

STATION	FOOT	REMARKS
CH 3 (MILLINGTON RD.)		
LT 17+20 - 17+45	25	
PROJECT TOTAL	25	

X4400220

FILE = S:\PROJECTS\2017\1087J17_KCH\DESIGN\CAD_SHEETS\1087J17_SOQ Sheets.dgn

WILLETT HOFMANN & ASSOCIATES INC
ENGINEERING ARCHITECTURE LAND SURVEYING
809 EAST 2ND STREET, DIXON, IL 61021-0367
T: 815-284-3381 DESIGN FIRM: #184-000918

DESIGNED - MAH	REVISED - -	LASALLE & KENDALL COUNTY	SCHEDULE OF QUANTITIES
CHECKED - GFS	REVISED - -	FAS 171(CH 3–MILLINGTON RD) OVER FOX RIVER	
DRAWN - MAH	REVISED - -	STATION 20+00	SHEET NO. 1 OF 1 SHEETS
CHECKED - GFS	REVISED - -		

FAS RTE.	SECTION	COUNTY	TOTAL SHEETS	SHEET NO.
171	17-00802-00-BR	LASALLE	93	5
	17-00142-00-BR	KENDALL		

WHA* 1087J17 ILLINOIS FED. AID PROJECT WZPE(199) CONTRACT NO. 87683

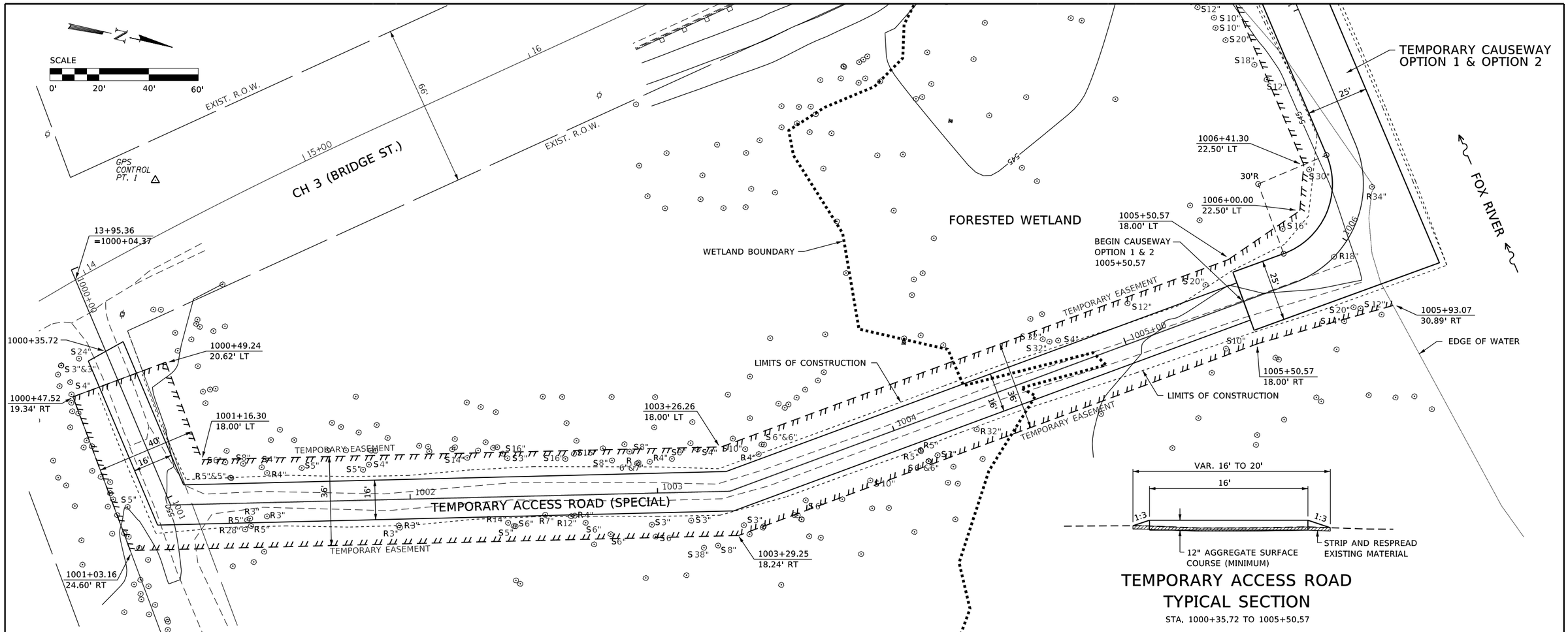

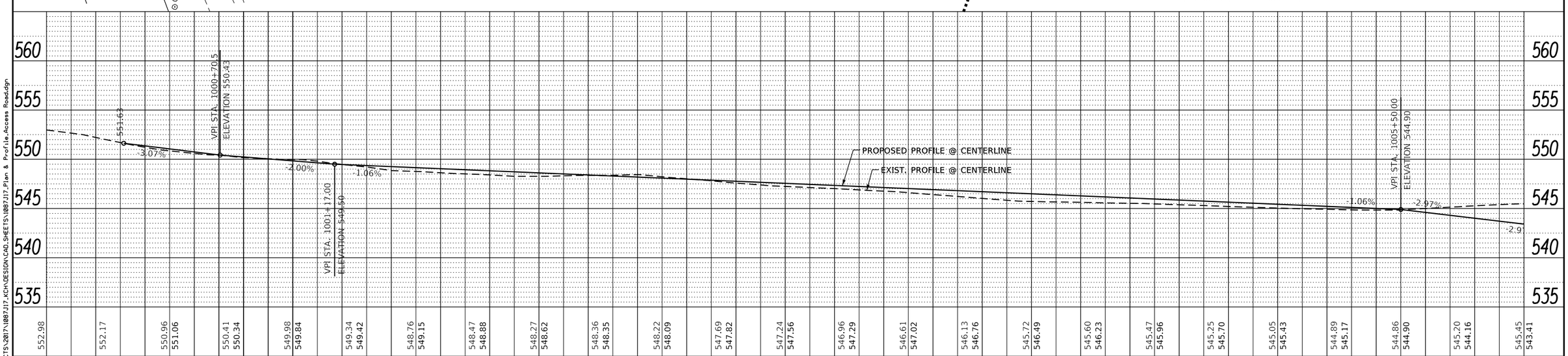

FILE = S:\PROJECTS\2017\1087J17-KCH\DESIGN\CAD_SHEETS\1087J17-Plan & Profile-Access Road.dgn

WILLETT HOFMANN & ASSOCIATES INC
ENGINEERING ARCHITECTURE LAND SURVEYING
809 EAST 2ND STREET, DIXON, IL 61021-0367
T: 815-284-3381 DESIGN FIRM: #184-000918

DESIGNED - xxx	REVISED - -	LASALLE & KENDALL COUNTY	PLAN AND PROFILE
CHECKED - xxx	REVISED - -	FAS 171(CH 3–MILLINGTON RD) OVER FOX RIVER	TEMPORARY ACCESS ROAD (SOUTH)
DRAWN - xxx	REVISED - -	STATION 20+00	SHEET NO. 1 OF 1 SHEET
CHECKED - xxx	REVISED - -		

FAS RTE.	SECTION	COUNTY	TOTAL SHEETS	SHEET NO.
171	17-00802-00-BR	LASALLE	93	6
	17-00142-00-BR	KENDALL		

WHA* 1087J17 | ILLINOIS | FED. AID PROJECT WZPE(199) | CONTRACT NO. 87683

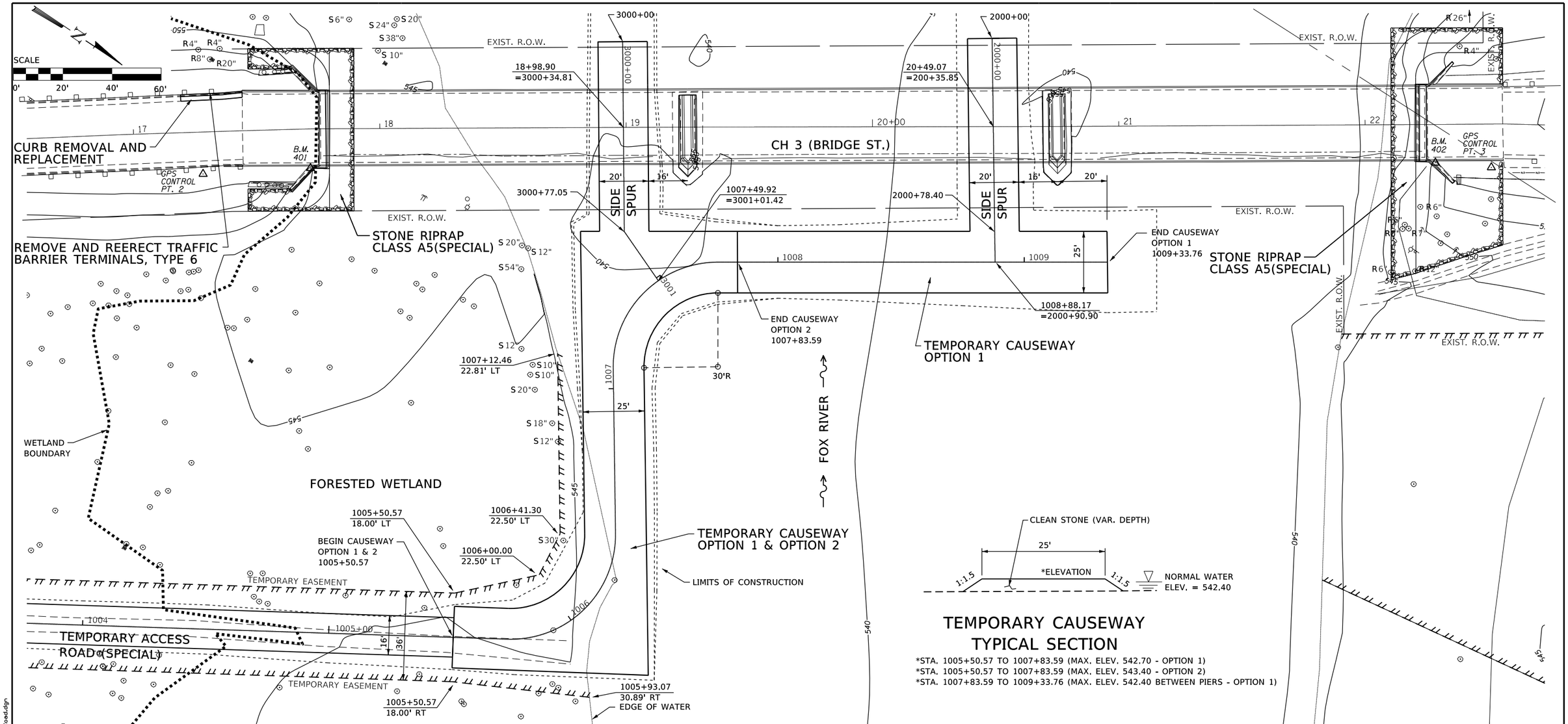

TEMPORARY CAUSEWAY TYPICAL SECTION

*STA. 1005+50.57 TO 1007+83.59 (MAX. ELEV. 542.70 - OPTION 1)
*STA. 1005+50.57 TO 1007+83.59 (MAX. ELEV. 543.40 - OPTION 2)
*STA. 1007+83.59 TO 1009+33.76 (MAX. ELEV. 542.40 BETWEEN PIERS - OPTION 1)

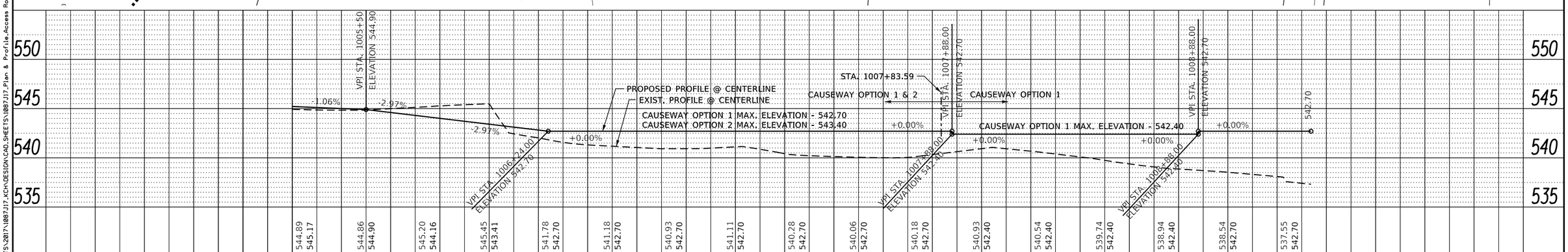

FILE = S:\PROJECTS\2017\1087J17_KCH\DESIGN\CAD_SHEETS\1087J17_Plan & Profile_Access Road.dgn

WILLETT HOFMANN & ASSOCIATES INC
ENGINEERING ARCHITECTURE LAND SURVEYING
809 EAST 2ND STREET, DIXON, IL 61021-0367
T: 815-284-3381 DESIGN FIRM: #184-000918

DESIGNED - xxx	REVISED - -		
CHECKED - xxx	REVISED - -		
DRAWN - xxx	REVISED - -		
CHECKED - xxx	REVISED - -		

LASALLE & KENDALL COUNTY
FAS 171(CH 3–MILLINGTON RD) OVER FOX RIVER
STATION 20+00

PLAN AND PROFILE
CAUSEWAY (OPTION 1 & OPTION 2 - SOUTH)
SHEET NO. 1 OF 1 SHEET

FAS RTE.	SECTION	COUNTY	TOTAL SHEETS	SHEET NO.
171	17-00802-00-BR	LASALLE	93	7
	17-00142-00-BR	KENDALL		

WHA* 1087J17 | ILLINOIS | FED. AID PROJECT WZPE(199) | CONTRACT NO. 87683

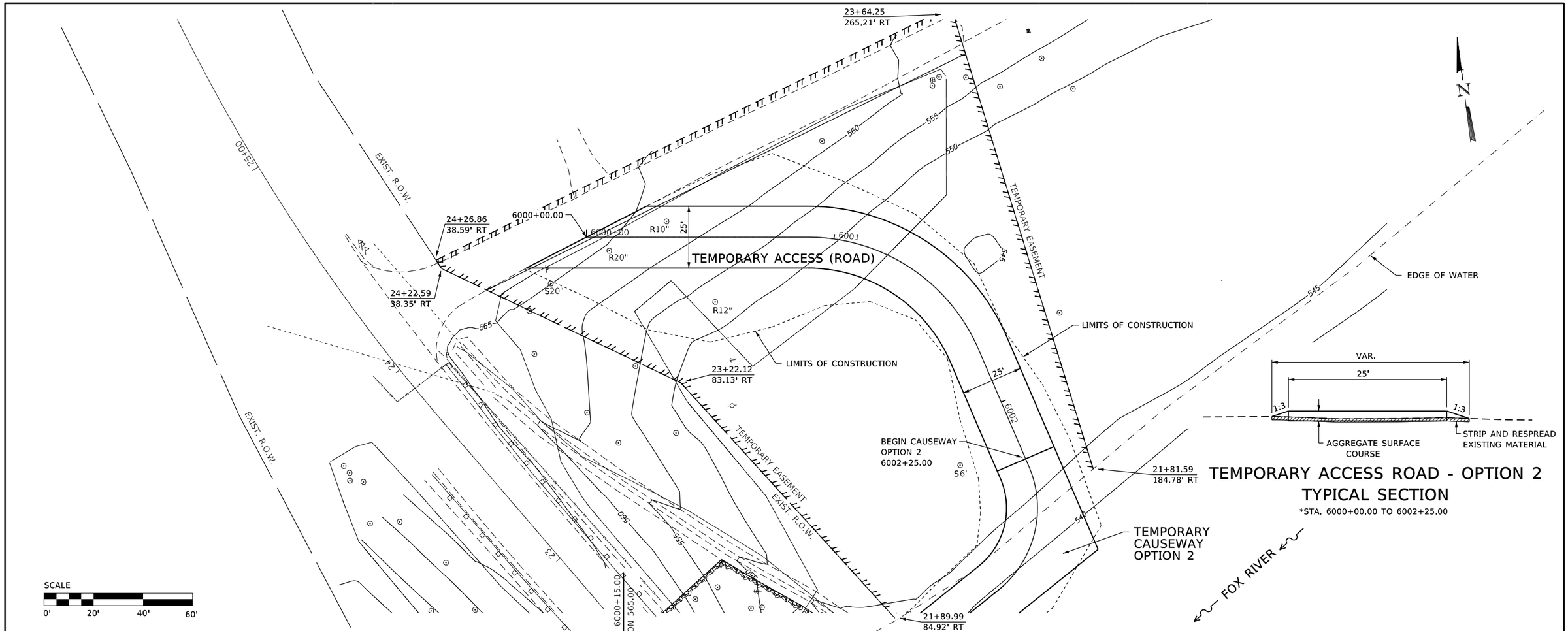

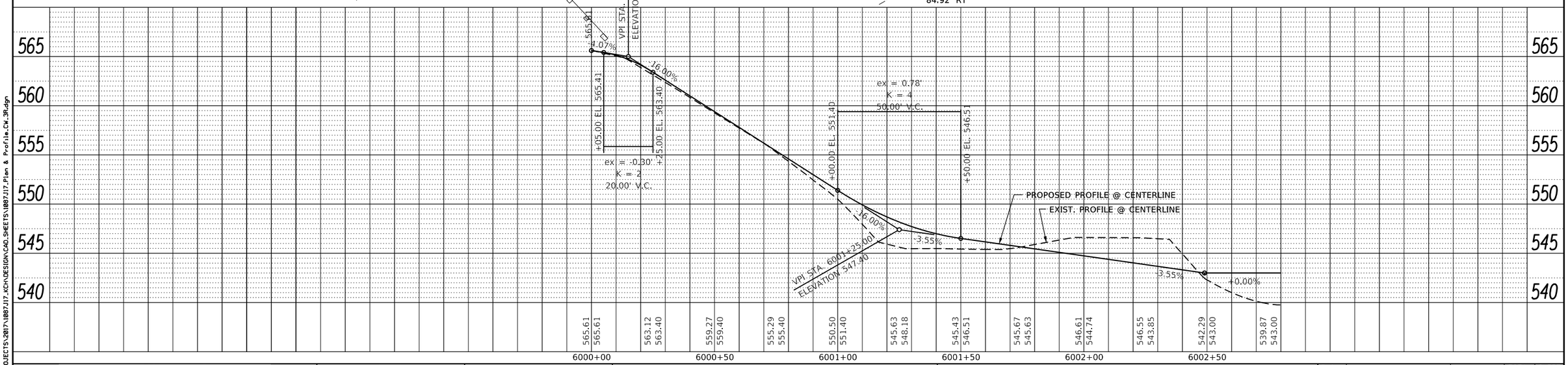

FILE = S:\PROJECTS\2017\1087J17.KCH\DESIGN\CAD_SHEETS\1087J17_Plan & Profile_CV_3R.dgn

WILLETT HOFMANN & ASSOCIATES INC
ENGINEERING ARCHITECTURE LAND SURVEYING
809 EAST 2ND STREET, DIXON, IL 61021-0367
T: 815-284-3381 DESGN FIRM: #184-000918

DESIGNED - xxx	REVISED - -		
CHECKED - xxx	REVISED - -		
DRAWN - xxx	REVISED - -		
CHECKED - xxx	REVISED - -		

LASALLE & KENDALL COUNTY
FAS 171(CH 3–MILLINGTON RD) OVER FOX RIVER
STATION 20+00

PLAN AND PROFILE
TEMPORARY ACCESS ROAD (OPTION 2 - NORTH)
SHEET NO. 1 OF 1 SHEET

FAS RTE.	SECTION	COUNTY	TOTAL SHEETS	SHEET NO.
171	17-00802-00-BR	LASALLE	93	8
	17-00142-00-BR	KENDALL		

WHA* 1087J17 ILLINOIS FED. AID PROJECT WZPE(199) CONTRACT NO. 87683

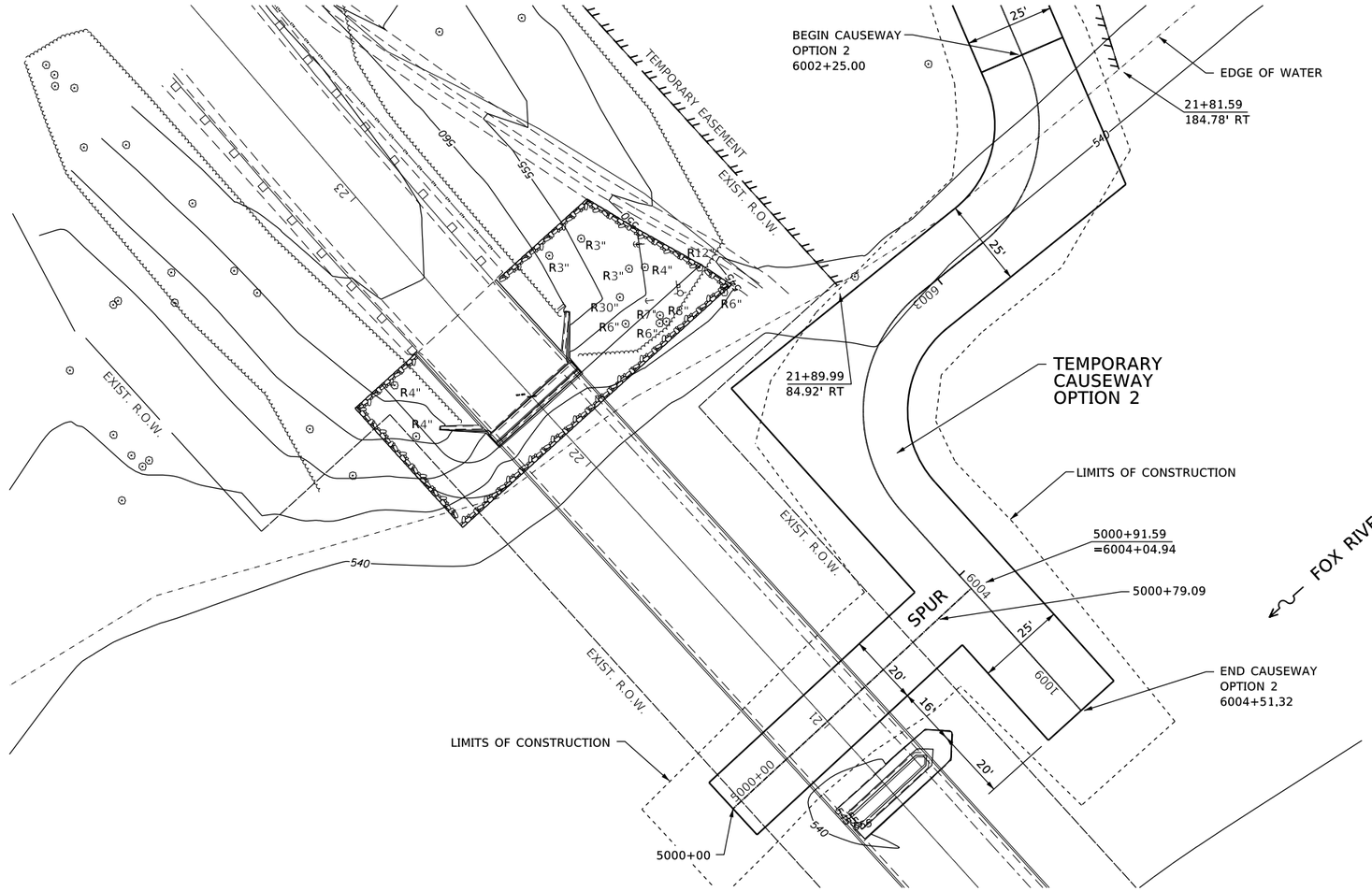

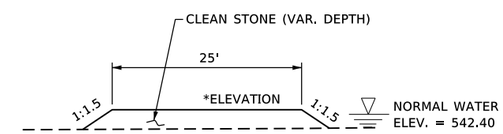

TEMPORARY CAUSEWAY (OPTION 2) TYPICAL SECTION

*STA. 6002+25.00 TO 6004+51.32 (MAX. ELEV. 543.00)

SCALE
0' 20' 40' 60'

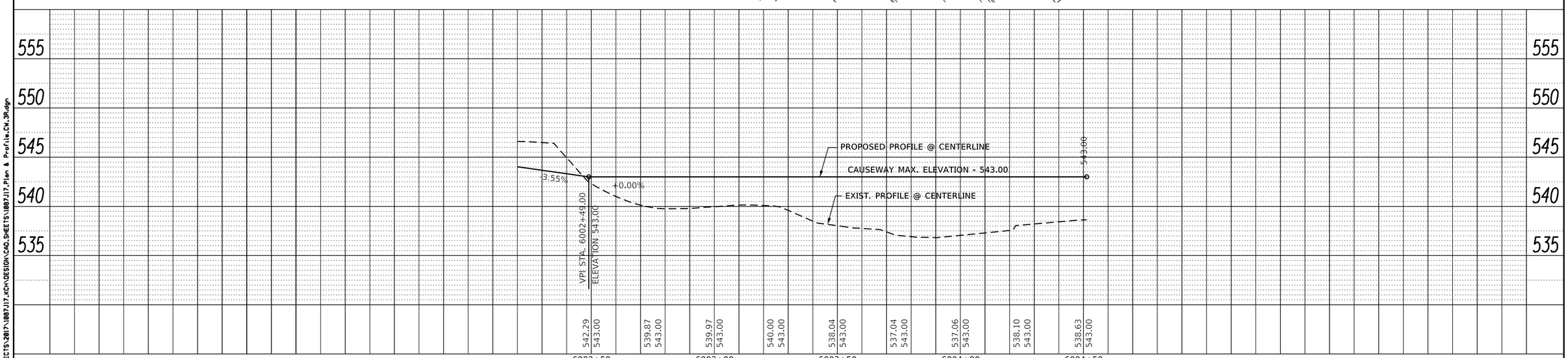

WILLETT HOFMANN & ASSOCIATES INC
ENGINEERING ARCHITECTURE LAND SURVEYING
809 EAST 2ND STREET, DIXON, IL 61021-0367
T: 815-284-3381 DESIGN FIRM: #184-000918

DESIGNED - xxx	REVISED -		
CHECKED - xxx	REVISED -		
DRAWN - xxx	REVISED -		
CHECKED - xxx	REVISED -		

LASALLE & KENDALL COUNTY
FAS 171(CH 3–MILLINGTON RD) OVER FOX RIVER
STATION 20+00

PLAN AND PROFILE
CAUSEWAY (OPTION 2 - NORTH)
SHEET NO. 1 OF 1 SHEET

FAS RTE.	SECTION	COUNTY	TOTAL SHEETS	SHEET NO.
171	17-00802-00-BR	LASALLE	93	9
	17-00142-00-BR	KENDALL		

WHA# 1087J17 ILLINOIS FED. AID PROJECT WZPE(199) CONTRACT NO. 87683

FILE = S:\PROJECTS\2017\1087J17\CH\DESIGN\CAD_SHEETS\1087J17_Plan & Profile_CW_3R.dgn

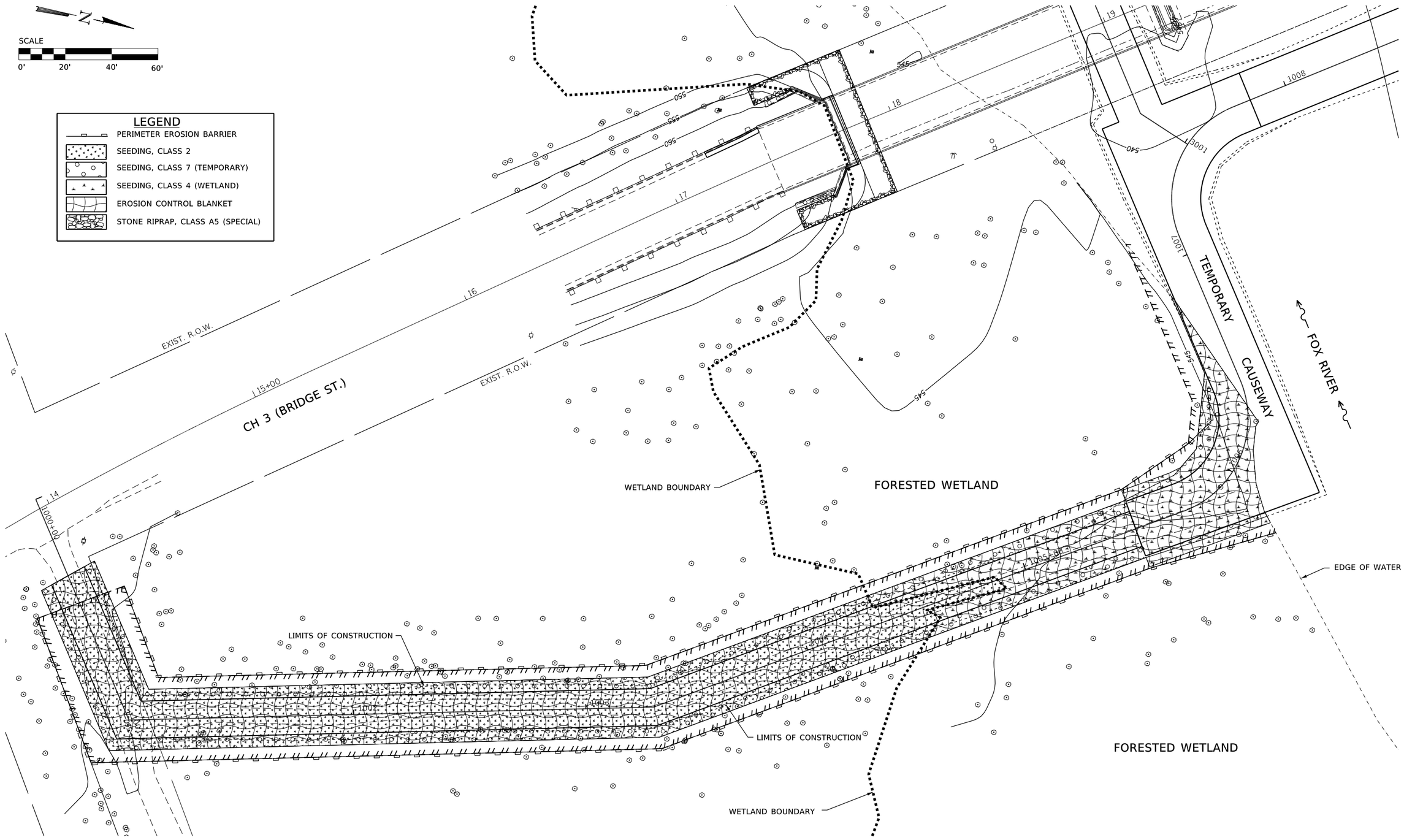

FILE = S:\PROJECTS\2017\1087J17_KCH\DESIGN\STRUCT\20_Drawings\1087J17_SWPPP_Access Road.dgn

WILLETT HOFMANN & ASSOCIATES INC
ENGINEERING ARCHITECTURE LAND SURVEYING
809 EAST 2ND STREET, DIXON, IL 61021-0367
T: 815-284-3381 DESIGN FIRM: #184-000918

DESIGNED - MAH	REVISED -		
CHECKED - GFS	REVISED -		
DRAWN - MAH	REVISED -		
CHECKED - GFS	REVISED -		

LASALLE & KENDALL COUNTY
FAS 171(CH 3–MILLINGTON RD) OVER FOX RIVER
STATION 20+00

STORM WATER POLLUTION PREVENTION PLAN
TEMPORARY ACCESS ROAD (SOUTH)
SHEET NO. 1 OF 3 SHEETS

FAS RTE.	SECTION	COUNTY	TOTAL SHEETS	SHEET NO.
171	17-00802-00-BR	LASALLE	93	10
	17-00142-00-BR	KENDALL		

WHA# 1087J17 | ILLINOIS | FED. AID PROJECT WZPE(199) | CONTRACT NO. 87683

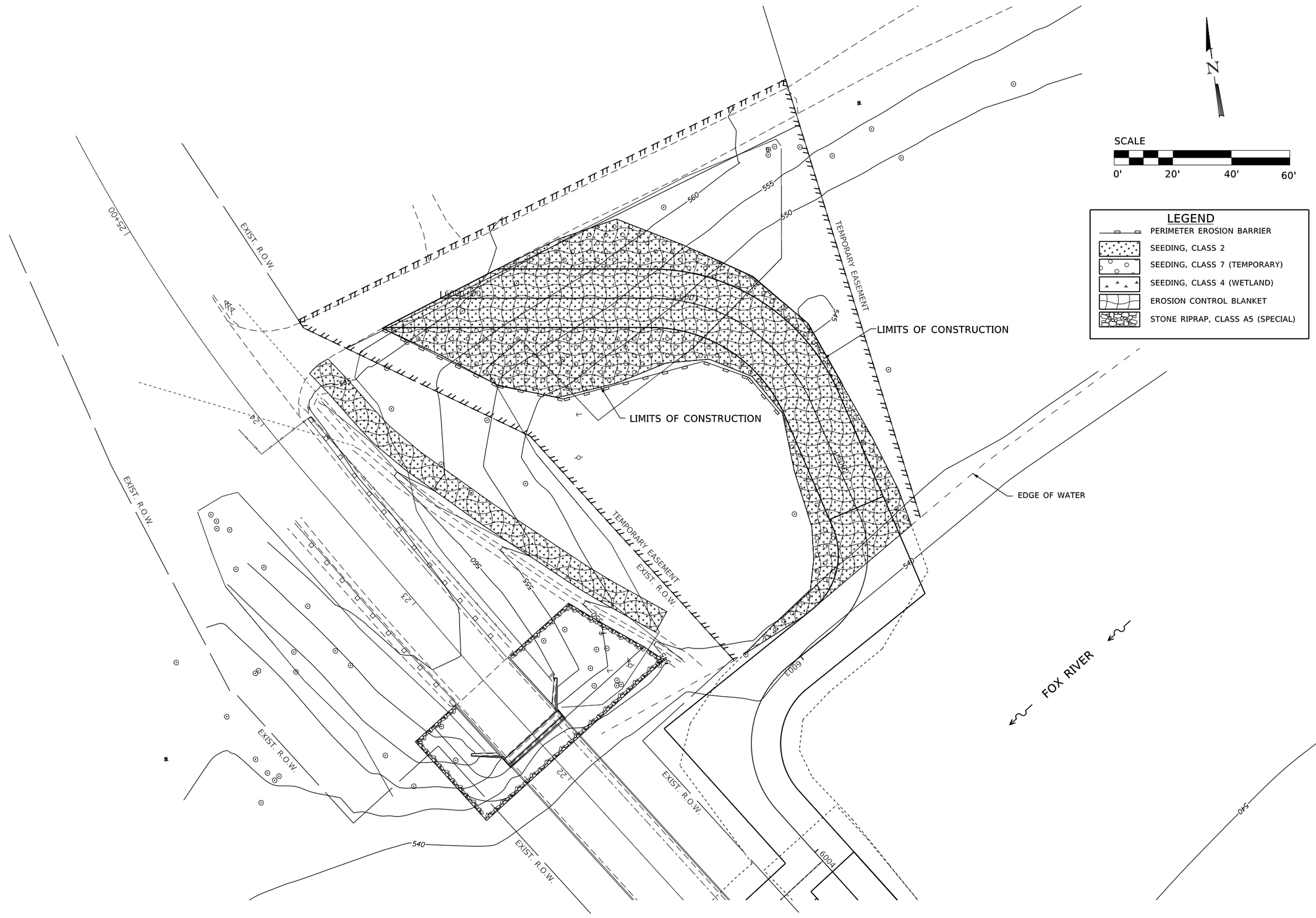

FILE = S:\PROJECTS\2017\1087J17_KCH\DESIGN\STRUCT\2D_Drawings\1087J17_SWPP_CW_3R.dgn

WILLETT HOFMANN & ASSOCIATES INC
ENGINEERING ARCHITECTURE LAND SURVEYING
809 EAST 2ND STREET, DIXON, IL 61021-0367
T: 815-284-3381 DESIGN FIRM: #184-000918

DESIGNED	- MAH	REVISED	- -
CHECKED	- GFS	REVISED	- -
DRAWN	- MAH	REVISED	- -
CHECKED	- GFS	REVISED	- -

LASALLE & KENDALL COUNTY
FAS 171(CH 3–MILLINGTON RD) OVER FOX RIVER
STATION 20+00

STORM WATER POLLUTION PREVENTION PLAN
TEMPORARY ACCESS ROAD (OPTION 2 - NORTH)

SHEET NO. 2 OF 3 SHEETS

FAS RTE.	SECTION	COUNTY	TOTAL SHEETS	SHEET NO.
171	17-00802-00-BR	LASALLE	93	11
	17-00142-00-BR	KENDALL		

WHA# 1087J17 | ILLINOIS | FED. AID PROJECT WZPE(199) | CONTRACT NO. 87683

STORM WATER POLLUTION PREVENTION PLAN

THE FOLLOWING PLAN IS ESTABLISHED AND INCORPORATED IN THE PROJECT TO DIRECT THE CONTRACTOR IN THE PLACEMENT OF TEMPORARY EROSION CONTROL SYSTEMS AND TO PROVIDE A STORM SEWER WATER POLLUTION PREVENTION PLAN FOR COMPLIANCE UNDER NPDES.

THE PURPOSE OF THIS PLAN IS TO MINIMIZE EROSION WITHIN THE CONSTRUCTION SITE AND TO LIMIT SEDIMENTS FROM LEAVING THE CONSTRUCTION SITE BY UTILIZING PROPER TEMPORARY EROSION CONTROL SYSTEMS AND PROVIDING GROUND COVER WITHIN A REASONABLE AMOUNT OF TIME.

CERTAIN EROSION CONTROL FACILITIES SHALL BE INSTALLED BY THE CONTRACTOR AT THE BEGINNING OF CONSTRUCTION. OTHER ITEMS SHALL BE INSTALLED BY THE CONTRACTOR AS DIRECTED BY THE ENGINEER ON A CASE BY CASE SITUATION DEPENDING ON THE CONTRACTOR'S SEQUENCE OF ACTIVITIES, TIME OF YEAR, AND EXPECTED WEATHER CONDITIONS.

THE CONTRACTOR SHALL INSTALL PERMANENT EROSION CONTROL SYSTEMS AND SEEDING WITHIN A TIME FRAME SPECIFIED HEREIN AND AS DIRECTED BY THE ENGINEER, THEREFORE MINIMIZING THE AMOUNT OF AREA SUSCEPTIBLE TO EROSION AND REDUCING THE AMOUNT OF TEMPORARY SEEDING. THE ENGINEER WILL DETERMINE IF ANY TEMPORARY EROSION CONTROL SYSTEMS SHOWN IN THE PLAN CAN BE DELETED AND IF ANY ADDITIONAL TEMPORARY EROSION CONTROL SYSTEMS, WHICH ARE NOT INCLUDED IN THIS PLAN, SHALL BE ADDED. THE CONTRACTOR SHALL PERFORM ALL WORK AS DIRECTED BY THE ENGINEER AND AS SHOWN IN STANDARD 280001 OF THE PLANS.

SECTION 280, TEMPORARY EROSION CONTROL, OF THE STANDARD SPECIFICATIONS ADDITIONALLY SUPPLEMENTS THIS PLAN.

THE PROJECT CONSISTS OF BRIDGE PIER SCOUR MITIGATION ON MILLINGTON RD. (C.H. 3) OVER THE FOX RIVER & SLOPE ARMORING AT BOTH ABUTMENTS.

CONSTRUCTION INCLUDES CONSTRUCTING TEMPORARY ACCESS ROADS AND CAUSEWAYS FROM THE SHORE LINE AND PLACING OF RIP RAP AT BRIDGE ABUTMENTS.

DESCRIPTION OF INTENDED SEQUENCE FOR MAJOR CONSTRUCTION ACTIVITIES WHICH WILL DISTURB SOILS FOR MAJOR PORTIONS OF THE CONSTRUCTION SITE;

1. INSTALL PERIMETER EROSION BARRIER AS SHOWN IN THE PLANS OR AS DIRECTED BY THE ENGINEER.
2. CONSTRUCT ACCESS ROADS AND CAUSEWAYS.
3. PERFORM SCOUR MITIGATION AT BRIDGE PIERS.
4. EARTH EXCAVATION AND PLACEMENT OF RIP RAP.
5. REMOVAL OF ACCESS ROADS AND CAUSEWAYS.
6. PLACEMENT OF PERMANENT EROSION CONTROL INCLUDING SEEDING, AND EROSION CONTROL BLANKET.

THE TOTAL AREA OF THE CONSTRUCTION SITE IS ESTIMATED TO BE 1.28 ACRES OF WHICH 1.28 ACRES WILL BE DISTURBED BY EXCAVATION, GRADING, AND OTHER ACTIVITIES.

OTHER REPORTS, STUDIES AND PLANS WHICH AID IN THE DEVELOPMENT OF THE STORM WATER POLLUTION PREVENTION PLAN AS REFERENCED DOCUMENTS;

INFORMATION OF THE SOILS AND TERRAIN WITHIN THE SITE WAS OBTAINED FROM SOIL BORINGS THAT WERE UTILIZED FOR THE DEVELOPMENT OF THE PROPOSED TEMPORARY EROSION CONTROL SYSTEMS.

PROJECT PLAN DOCUMENTS, SPECIFICATIONS AND SPECIAL PROVISIONS, AND PLAN DRAWINGS INDICATING DRAINAGE PATTERNS AND APPROXIMATE SLOPES ANTICIPATED AFTER GRADING ACTIVITIES WERE UTILIZED FOR THE PROPOSED PLACEMENT OF THE TEMPORARY EROSION CONTROL SYSTEMS.

DRAINAGE TRIBUTARIES AND SENSITIVE AREAS RECEIVING RUNOFF FROM THIS CONSTRUCTION SITE;

FOX RIVER

CONTROLS - EROSION CONTROLS AND SEDIMENT CONTROL DESCRIPTION OF STABILIZATION PRACTICES AT THE BEGINNING OF CONSTRUCTION,

THE DRAWINGS, SPECIFICATIONS AND SPECIAL PROVISIONS WILL ENSURE THAT EXISTING VEGETATION IS PRESERVED WHERE ATTAINABLE AND DISTURBED PORTIONS OF THE SITE WILL BE STABILIZED. STABILIZATION PRACTICES INCLUDE: TEMPORARY SEEDING, PERMANENT SEEDING, PERIMETER EROSION BARRIER, AND OTHER APPROPRIATE MEASURES AS DIRECTED BY THE ENGINEER. STABILIZATION MEASURES SHALL BE INITIATED AS SOON AS PRACTICABLE IN PORTIONS OF THE SITE WHERE CONSTRUCTION ACTIVITIES HAVE TEMPORARILY OR PERMANENTLY CEASED, BUT IN NO CASE MORE THAN 7 DAYS AFTER THE CONSTRUCTION ACTIVITY IN THAT PORTION OF THE SITE HAS TEMPORARILY OR PERMANENTLY CEASED.

AREAS OF EXISTING VEGETATION (WOOD AND GRASSLANDS) OUTSIDE THE PROPOSED CONSTRUCTION LIMITS SHALL BE IDENTIFIED BY THE ENGINEER FOR PRESERVING AND SHALL BE PROTECTED FROM CONSTRUCTION ACTIVITIES.

DEAD, DISEASED, OR UNSUITABLE VEGETATION WITHIN THE SITE SHALL BE REMOVED AS DIRECTED BY THE ENGINEER, ALONG WITH REQUIRED TREE REMOVAL.

AS SOON AS REASONABLE ACCESS IS AVAILABLE TO ALL LOCATIONS WHERE WATER DRAINS AWAY FROM THE PROJECT, TEMPORARY DITCH CHECKS AND PERIMETER EROSION BARRIER SHALL BE INSTALLED AS CALLED OUT IN THIS PLAN AND DIRECTED BY THE ENGINEER.

(D) BARE AND SPARSELY VEGETATED GROUND IN HIGHLY ERODIBLE AREAS AS DETERMINED BY THE ENGINEER SHALL BE TEMPORARILY SEEDED AT THE BEGINNING OF CONSTRUCTION WHERE NO CONSTRUCTION ACTIVITIES ARE EXPECTED WITHIN 7 DAYS.

(E) AT LOCATIONS WHERE A SIGNIFICANT AMOUNT OF WATER DRAINS INTO THE CONSTRUCTION ZONE FROM OUTSIDE AREAS (ADJACENT LANDOWNERS), TEMPORARY DITCH CHECKS WILL BE UTILIZED TO LOCALLY DIVERT WATER, REDUCE FLOW RATES, AND COLLECT OUTSIDE SILTATION INSIDE THE RIGHT-OF-WAY LINE.

2. ESTABLISHMENT OF THESE TEMPORARY EROSION CONTROL MEASURES WILL HAVE ADDITIONAL BENEFITS TO THE PROJECT. DESIRABLE GRASS SEED WILL BECOME ESTABLISHED IN THESE AREAS AND WILL SPREAD SEEDS ONTO THE CONSTRUCTION SITE UNTIL PERMANENT SEEDING/MOWING AND OVER SEEDING CAN BE COMPLETED.

DESCRIPTION OF STABILIZATION PRACTICES DURING CONSTRUCTION;

1. DURING CONSTRUCTION, AREAS OUTSIDE THE CONSTRUCTION LIMITS AS OUTLINED PREVIOUSLY HEREIN SHALL BE PROTECTED. THE CONTRACTOR SHALL NOT USE THIS AREA FOR STAGING (EXCEPT AS DESCRIBED ON THE PLANS AND DIRECTED BY THE ENGINEER), PARKING OF VEHICLES OR CONSTRUCTION EQUIPMENT, STORAGE OF MATERIALS, OR OTHER CONSTRUCTION RELATED ACTIVITIES.

(A) WITHIN THE CONSTRUCTION LIMITS, AREAS WHICH MAY BE SUSCEPTIBLE TO EROSION AS DETERMINED BY THE ENGINEER SHALL REMAIN UNDISTURBED UNTIL FULL SCALE CONSTRUCTION IS UNDERWAY TO PREVENT UNNECESSARY SOIL EROSION.

(B) EARTH STOCKPILES SHALL BE TEMPORARILY SEEDED IF THEY ARE TO REMAIN UNUSED FOR MORE THAN 14 DAYS.

(C) AS CONSTRUCTION PROCEEDS, THE CONTRACTOR SHALL INSTITUTE THE FOLLOWING AS DIRECTED BY THE ENGINEER:

I. PLACE TEMPORARY EROSION CONTROL FACILITIES AT LOCATIONS SHOWN ON THE PLANS.

II. TEMPORARILY SEED ERODIBLE BARE EARTH ON A WEEKLY BASIS TO MINIMIZE THE AMOUNT OF ERODIBLE SURFACE AREA WITHIN THE CONTRACT LIMITS.

(D) EXCAVATED AREAS AND EMBANKMENT SHALL BE PERMANENTLY SEEDED IMMEDIATELY AFTER FINAL GRADING. IF NOT, THEY SHALL BE TEMPORARILY SEEDED IF NO CONSTRUCTION ACTIVITY IN THE AREA IS PLANNED FOR 7 DAYS.

(E) CONSTRUCTION EQUIPMENT SHALL BE STORED AND FUELED ONLY AT DESIGNATED LOCATIONS. ALL NECESSARY MEASURES SHALL BE TAKEN TO CONTAIN ANY FUEL OR OTHER POLLUTANT IN ACCORDANCE WITH EPA WATER QUALITY REGULATIONS. LEAKING EQUIPMENT OR SUPPLIES SHALL BE IMMEDIATELY REPAIRED OR REMOVED FROM THE SITE.

(F) THE RESIDENT ENGINEER SHALL INSPECT THE PROJECT DAILY DURING CONSTRUCTION ACTIVITIES. INSPECTION SHALL ALSO BE DONE WEEKLY AND AFTER RAINS OF 1/2 INCH OR GREATER OR EQUIVALENT SNOWFALL DURING THE WINTER SHUTDOWN PERIOD. THE PROJECT SHALL ADDITIONALLY BE INSPECTED BY THE CONSTRUCTION FIELD ENGINEER ON A BI-WEEKLY BASIS TO DETERMINE THAT EROSION CONTROL EFFORTS ARE IN PLACE AND EFFECTIVE AND IF OTHER EROSION CONTROL WORK IS NECESSARY.

(G) SEDIMENT COLLECTED DURING CONSTRUCTION OF THE VARIOUS TEMPORARY EROSION CONTROL SYSTEMS SHALL BE DISPOSED OF ON THE SITE ON A REGULAR BASIS AS DIRECTED BY THE ENGINEER. THE COST OF THIS MAINTENANCE SHALL BE INCLUDED IN THE UNIT BID PRICE FOR VARIOUS TEMPORARY EROSION CONTROL PAY ITEMS.

(H) THE TEMPORARY EROSION CONTROL SYSTEMS SHALL BE REMOVED AS DIRECTED BY THE ENGINEER AFTER USE IS NO LONGER NEEDED OR NO LONGER FUNCTIONING. THE COST OF THIS REMOVAL SHALL BE INCLUDED IN THE UNIT BID PRICE FOR VARIOUS TEMPORARY EROSION CONTROL PAY ITEMS.

DESCRIPTION OF STRUCTURAL PRACTICES AFTER FINAL GRADING

1. TEMPORARY EROSION CONTROL SYSTEMS SHALL BE LEFT IN PLACE WITH PROPER MAINTENANCE UNTIL PERMANENT EROSION CONTROL IS IN PLACE AND WORKING PROPERLY AND ALL PROPOSED TURF AREAS SEEDED AND ESTABLISHED.

2. ONCE PERMANENT EROSION CONTROL SYSTEMS AS PROPOSED IN THE PLANS ARE FUNCTIONAL AND ESTABLISHED, TEMPORARY ITEMS SHALL BE REMOVED, CLEANED UP, AND DISTURBED TURF RESEEDED.

MAINTENANCE AFTER CONSTRUCTION

1. CONSTRUCTION IS COMPLETE AFTER ACCEPTANCE BY THE ENGINEER'S FINAL INSPECTION. MAINTENANCE UP TO THIS DATE WILL BE BY THE CONTRACTOR.

MISCELLANEOUS

ALL EROSION CONTROL PRODUCTS FURNISHED SHALL BE SPECIFICALLY RECOMMENDED BY THE MANUFACTURER FOR THE USE SPECIFIED IN THE EROSION CONTROL PLAN. PRIOR TO THE APPROVAL AND USE OF THE PRODUCT, THE CONTRACTOR SHALL SUBMIT TO THE ENGINEER A NOTARIZED CERTIFICATION BY THE PRODUCER STATING THE INTENDED USE OF THE PRODUCT AND THAT THE PHYSICAL PROPERTIES REQUIRED FOR THIS APPLICATION ARE MET OR EXCEEDED. THE CONTRACTOR SHALL PROVIDE MANUFACTURER INSTALLATION PROCEDURES TO FACILITATE THE ENGINEER IN CONSTRUCTION INSPECTION.

EROSION CONTROL NOTES

TEMPORARY EROSION CONTROL SEEDING SHALL BE APPLIED AT A RATE OF 100 LBS. /ACRES.

EROSION CONTROL BLANKET SHALL BE INSTALLED TO ALL DISTURBED AREAS WITH SLOPES EQUAL TO OR GREATER THAN 1V:5H AND IN CRITICAL AREAS (I.E. DETENTION BASIN PERIMETERS, STREAMBANKS, BERMS, ETC.) IMMEDIATELY UPON FINAL GRADING.

ALL ADJACENT STREETS MUST BE KEPT CLEAR OF DEBRIS, INSPECTED DAILY AND CLEANED WHEN NECESSARY.

ALL SOIL EROSION AND SEDIMENT CONTROL PRACTICES ARE REFERENCED FROM THE ILLINOIS URBAN MANUAL.

TEMPORARY DITCH CHECKS SHALL COMPLY WITH SECTION 280 OF THE STANDARD SPECIFICATIONS FOR ROAD AND BRIDGE CONSTRUCTION AND STANDARD 280001 LOCATED IN THE PROPOSAL.

EROSION CONTROL BLANKET SHALL BE PLACED IN DITCHES AS SHOWN ON THIS EROSION CONTROL PLAN SHEET AND IN ACCORDANCE WITH SECTION 251 OF THE STANDARD SPECIFICATIONS FOR ROAD AND BRIDGE CONSTRUCTION.

THE USE OF GREEN DYE IN THE EROSION CONTROL BLANKET IS NOT ACCEPTABLE.

THE USE OF ASPHALT AS A BINDER IS NOT ACCEPTABLE.

ALL ITEMS SHALL BE CONSTRUCTED AS SHOWN ON STANDARD 280001 AND AS DIRECTED BY THE ENGINEER. MAINTENANCE AND CLEANING OF THE EROSION CONTROL ITEMS SHALL BE INCLUDED IN THE RESPECTIVE EROSION CONTROL PAY ITEM.

WETLAND RESTORATION NOTES

PERIMETER EROSION BARRIER SHALL BE PLACED ALONG THE LIMITS OF CONSTRUCTION OF THE TEMPOARY ACCESS ROAD PRIOR TO THE START OF CONSTRUCTION.

TREES IN THE FORESTED WETLAND REMOVED DURING CONSTRUCTION SHALL BE REPLACED WITH NEW TREES OF SIMILAR SPECIES AS IDENTIFIED IN THE WETLAND AND WATERWAY INVESTIGATION. TREE REPLACEMENT LOCATIONS SHALL BE DETERMINED BY THE ENGINEER OR A REPRESENTATIVE OF THE FOREST PRESERVE. ALL NEW TREES WILL BE PLANTED WITHIN THE DISTURBED AREAS OF THE FORESTED WETLAND.

NO TREE REMOVAL SHALL BE COMPLETED BETWEEN APRIL 1ST. AND SEPTEMBER 30TH.

ALL MATERIAL IN THE FORESTED WETLAND EXCAVATED DURING THE CONSTRUCTION OF THE TEMPORARY ACCESS ROAD SHALL BE STOCKPILED ONSITE AND RESPREAD AFTER THE TEMPORARY ACCESS ROAD IS REMOVED. MATERIAL SHALL BE REGRADED TO THE ORIGINAL GROUND CONTOURS.

ALL AGGREGATE MATERIAL USED IN THE CONSTRUCTION OF THE TEMPORARY ACCESS ROAD SHALL BE EXCAVATED AND REMOVED FROM THE FORESTED WETLAND AND HAULED OFFSITE.

APPROXIMATELY 0.12 ACRES OF FORESTED WETLAND WILL BE DISTURBED DURING CONSTRUCTION. ALL DISTURBED AREAS WILL BE REPLANTED WITH NATIVE WETLAND VEGETATION AS IDENTIFIED IN THE WETLAND AND WATERWAY INVESTIGATION.

EXISTING STRUCTURE DESCRIPTION:

The existing bridge is a three-span reinforced concrete deck bridge supported by riveted plate girders. The total length back to back of abutments is 451'-9". The spans are:148'-10",150'-0" and 148'-10". The out to out width of the structure is 25'-8". The substructure consists of closed masonry abutments and solid masonry piers supported on spread footings. The structure was built as Millington Bridge, Section B at Sta. 16+15.48 in 1958. The deck was replaced and widened and incorporate New Jersey Type Parapet walls. The existing girders were strengthened and made composite in positive moment areas to provide HS20 capacity. Neoprene expansion Joints were also be provided. Abutments and piers were repaired and widened and new wing walls were constructed.

The existing piers are to be removed and replaced.

No salvage.

Bench Mark 402: Chis. "□" on N.E. wing of structure
15.7' Lt of Sta. 21+71.5, Elev. 564.99

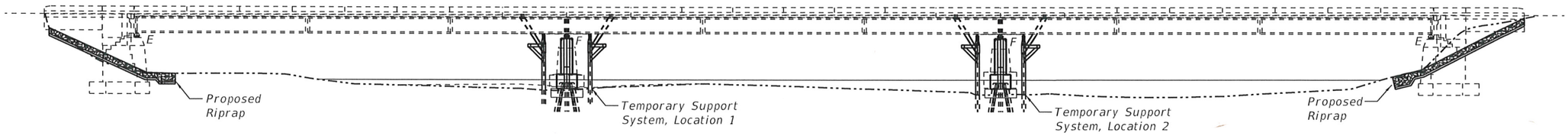

SOUTH ABUT. PIER #1 ELEVATION VIEW PIER #2 NORTH ABUT.

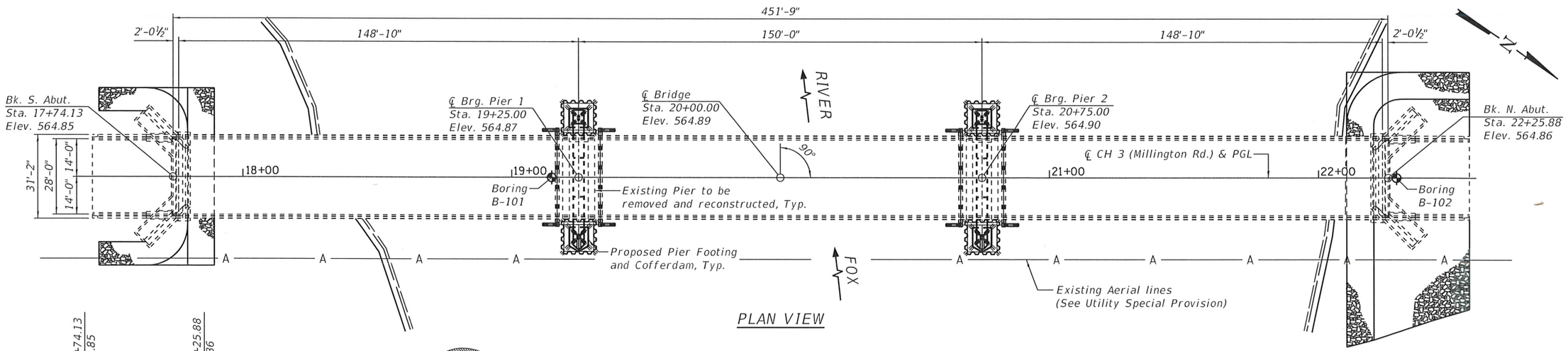

PLAN VIEW

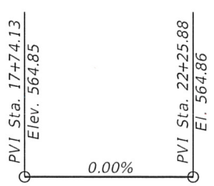

PROFILE GRADE

STATE OF ILLINOIS
BRIAN K. CONNERS
081-005213
DIXON, IL
LICENSED STRUCTURAL ENGINEER

DATE: Brian K. Conners
EXPIRES 11/30/18

"I certify that to the best of my knowledge, information and belief, this Bridge Design is structurally adequate for the design loading shown on the plans. The design is an economical one for the style of structure and complies with requirements of the current 'AASHTO LRFD Bridge Design Specifications'."

DESIGN SPECIFICATIONS

2014 AASHTO LRFD Bridge Design Specifications, 7th Edition with 2016 Interims

LOADING HL-93

Allow 25#/sq. ft. for future wearing surface.

DESIGN STRESSES

SUBSTRUCTURE (NEW CONSTRUCTION)
f'c = 3,500 psi
fy = 60,000 psi (Reinforcement)

DECK & REHAB SUPERSTRUCTURE (2000)
f'c = 3,500 psi
fy = 60,000 psi (Reinforcement)
fy = 30,000 psi (M270 Gr. 36 Structural Elements)

EXISTING STRUCTURE (1957)
f'c = 1,400 psi (Super. & Sub. Structural No Earth Pressure)
f'c = 1,000 psi (Sub. with Earth Pressure)
n = 10
fs = 20,000 psi (Reinforcement)
fy = 33,000 psi Struct. (A.S.T.M. A33)

SEISMIC DATA

Seismic Performance Zone (SPZ) = 1
Design Spectral Acceleration at 1.0 sec. (SD1) = 0.095
Design Spectral Acceleration at 0.2 sec. (SDS) = 0.168
Soil Site Class = D

WATERWAY INFORMATION

Drainage Area ---------- 2,093 Sq. Mi.
Character Level, Wooded, Cultivated & Swampy
Required Opening (15 Yr. flood) 3,525 Sq. Ft.
Present Opening ---------- 5,180 Sq. Ft.
Proposed Opening ---------- 5,180 Sq. Ft.

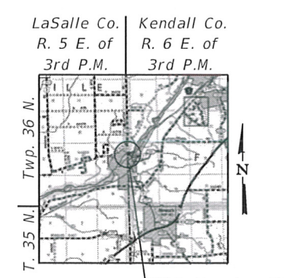

LOCATION SKETCH

GENERAL PLAN AND ELEVATION
MILLINGTON ROAD OVER FOX RIVER
F.A.S. RTE. 171
SECTION 17-00802-00-BR/17-00142-00-BR
LASALLE & KENDALL COUNTY
STATION 20+00
STRUCTURE NO. 047-3000

WILLETT HOFMANN & ASSOCIATES INC
ENGINEERING ARCHITECTURE LAND SURVEYING
809 EAST 2ND STREET, DIXON, IL 61021-0367
T: 815-284-3351 DESIGN FIRM: #184-000918

DESIGNED - BKC	REVISED -	LASALLE & KENDALL COUNTY FAS 171(CH 3-MILLINGTON RD) OVER FOX RIVER STATION 20+00	STRUCTURAL SHEET NO. 1 OF 67 SHEETS
CHECKED - PLP	REVISED -		
DRAWN - FDL	REVISED -		
CHECKED - BKC	REVISED -		

FAS RTE.	SECTION	COUNTY	TOTAL SHEETS	SHEET NO.
171	17-00802-00-BR	LASALLE	93	13
	17-00142-00-BR	KENDALL		

WHA* 1087J17 ILLINOIS FED. AID PROJECT #ZPE(199) CONTRACT NO. 87683

FILE = S:\PROJECTS\2017\1087J17_KCH\DESIGN\CAD_SHEETS\1087J17_GPE.dgn

GENERAL NOTES:

1. Fasteners shall be high strength bolts. Bolts ¾" Ø, open holes 13/16" Ø, unless otherwise noted.
2. Calculated weight of Structural Steel AASHTO M270, Grade 50 = 118,210 lb.
3. Field welding of construction accessories will not be permitted to the tension flange or web of existing riveted plate beams or girders. Field welding in other areas will be permitted only when approved by the Engineer.
4. Reinforcement bars designated (E) shall be epoxy coated.
5. Plan dimensions and details relative to existing structure have been taken from existing plans and are subject to nominal construction variations. It shall be the Contractor's responsibility to verify such dimensions and details in the field and make necessary approved adjustments prior to construction or ordering materials. Such variations shall not be cause for additional compensation for a change in the scope of work, however, the Contractor will be paid for the quantity actually furnished at the unit price bid for work.
6. Bearing seat surfaces shall be constructed or adjusted to the designated elevations within a tolerance of ⅛" (0.01'). Adjustment shall be made either by grinding the surface or by shimming the bearings.
7. Paint Repair of structural steel shall be done per Special Provisions for Temporary Support System
8. Layout of the slope protection system may be varied to suit ground conditions in the field as directed by the Engineer.
9. Seal coat thickness design is based on the Estimated Water Surface Elevation (EWSE). Cofferdam design details and proposed changes in seal coat thickness shall be submitted to the Engineer for approval with the cofferdam design.
10. Load carrying components designated "NTR" shall conform to the Impact Testing Requirement, Zone 2.
11. Two ⅛" adjusting shims shall be provided for each bearing in addition to all other plates or shims and placed as shown on bearing details.
12. Concrete Removal of the piers shall be executed with use of defined saw cuts. The use of drilling or other means of pier splitting shall not be allowed. See Special Provisions for Concrete Removal.
13. The Contractor shall take all necessary measures to ensure that no debris falls in the Fox River. The cost of this work shall be included with Temporary Support System.
14. The Contractor is advised that the existing structure contains a sinking pier that is in a deteriorated condition with reduced load carrying capacity. See Special Provisions for restrictions on loads on the bridge. It is the Contractor's responsibility to account for the condition of the existing structure when developing construction procedures for the complete or partial removal, or replacement of the structure.

INDEX OF SHEETS

X/Y or X/Y or X/Y or similar indicates Detail X on Structural Sheet Y of 67

TOTAL BILL OF MATERIAL

	ITEM	UNIT	SUPER.	SUB.	TOTAL
*	Concrete Removal	Cu. Yd.	———	194.9	194.9
	Cofferdam Excavation	Cu. Yd.	———	69	69
	Cofferdam (Type 2) (Location - 1)	Each	———	1	1
	Cofferdam (Type 2) (Location - 2)	Each	———	1	1
	Cofferdam (Type 2) (Location - 3)	Each	———	1	1
	Cofferdam (Type 2) (Location - 4)	Each	———	1	1
	Concrete Structures	Cu. Yd.	———	214	214
*	Seal Coat Concrete	Cu. Yd.	———	72.5	72.5
*	Furnishing and Erecting Structural Steel	Pound	———	2,912	2,912
	Stud Shear Connectors	Each	———	716	716
	Reinforcement Bars, Epoxy Coated	Pound	———	57210	57210
	Furnishing Steel Piles HP14x117	Foot	———	1634	1634
	Driving Piles	Foot	———	1634	1634
	Test Pile Steel HP14x117	Each	———	2	2
	Pile Shoes	Each	———	28	28
	Anchor Bolts, 1¼"	Each	———	32	32
*	Jack and Remove Existing Bearings	Each	———	8	8
*	Structural Repair of Concrete (Depth Greater Than 5 Inches)	Sq. Ft.	4	———	4
*	Debris Removal	L. Sum	———	1	1
*	Temporary Support System, Location 1	Each	———	1	1
*	Temporary Support System, Location 2	Each	———	1	1
*	Substructure Repair (Grout Bags)	L. Sum	———	1	1
*	Stone Riprap, Class A5 (Special)	Ton	———	900	900

*See Special Provisions

GENERAL DATA
MILLINGTON ROAD OVER FOX RIVER
F.A.S. RTE. 171
SECTION 17-00802-00-BR/17-00142-00-BR
LASALLE & KENDALL COUNTY
STATION 20+00
STRUCTURE NO. 047-3000

WILLETT HOFMANN & ASSOCIATES INC
ENGINEERING ARCHITECTURE LAND SURVEYING
809 EAST 2ND STREET, DIXON, IL 61021-0367
T: 815-284-3381 DESIGN FIRM: #184-000718

DESIGNED - SM	REVISED -	LASALLE & KENDALL COUNTY	
CHECKED - PLP	REVISED -	FAS 171(CH 3–MILLINGTON RD) OVER FOX RIVER	
DRAWN - RDA	REVISED -	STATION 20+00	
CHECKED - BKC	REVISED -		STRUCTURAL SHEET NO. 2 OF 67 SHEETS

FAS RTE.	SECTION	COUNTY	TOTAL SHEETS	SHEET NO.
171	17-00802-00-BR	LASALLE	93	14
	17-00142-00-BR	KENDALL		

WHA* 1087J17 | ILLINOIS | FED. AID PROJECT WZPE(199) | CONTRACT NO. 87683

FILE = S:\PROJECTS\2017\1087J17_KCH\DESIGN\CAD_SHEETS\1087J17_GPE.dgn

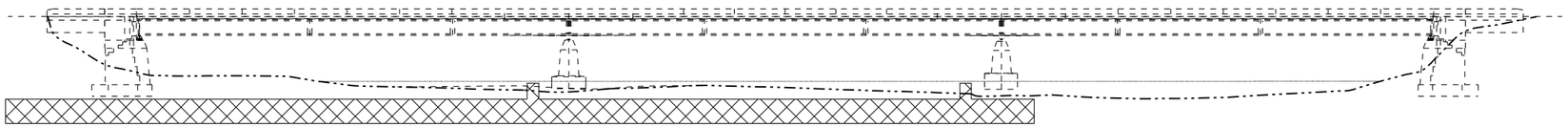

SOUTH ABUTMENT | EXISTING PIER 1 | EXISTING PIER 2 | NORTH ABUTMENT

PHASE 1: MOBILIZATION

STRUCTURAL SHEETS 4-6

PROPOSED CONSTRUCTION SEQUENCE:

PHASE 1: MOBILIZATION

1) Install Causeway
2) Perform Grout Repair & Remove Debris
3) Drive Piles for Temporary Support System, Location 2
4) Drive Piles for Temporary Support System, Location 1

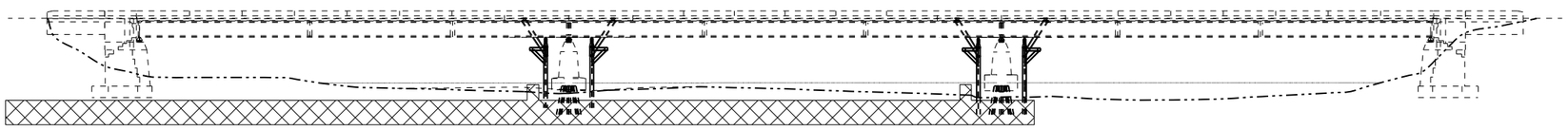

SOUTH ABUTMENT | TEMPORARY SUPPORT SYSTEM, LOCATION 1 | TEMPORARY SUPPORT SYSTEM, LOCATION 2 | NORTH ABUTMENT

PHASE 2: TEMPORARY PIER CONSTRUCTION AND JACKING

STRUCTURAL SHEETS 6-17

PROPOSED CONSTRUCTION SEQUENCE:

PHASE 2: TEMPORARY PIER CONSTRUCTION AND JACKING

5) Erect Steel for Temporary Support System, Location 2
6) Jack girders to transfer bridge support to Temporary Support System, Location 2
7) Remove designated/remaining portions of Existing Pier 2 (including designated grout bags)
8) Drive Proposed Pier 2 Piles
9) Drive and install Proposed Pier 2 Cofferdam sheets
10) At Pier 1, preform Steps 5-9 for Temporary Support System, Location 1 simultaneously with Location 2

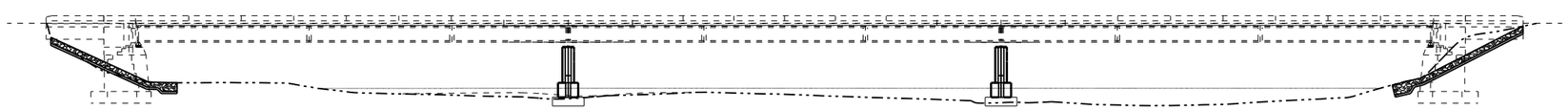

SOUTH ABUTMENT | PROPOSED PIER 1 | PROPOSED PIER 2 | NORTH ABUTMENT

PHASE 3: PROPOSED CONSTRUCTION

STRUCTURAL SHEETS 18-28

PROPOSED CONSTRUCTION SEQUENCE:

PHASE 3: PROPOSED CONSTRUCTION

11) Excavate Cofferdams, pour seal coat concrete, cure, and dewater
12) Construct proposed pier footings and cure
13) Construct proposed pier walls and cure
14) Install retrofit pier bearings
15) De-jack/disassemble temporary piers
16) Remove all temporary support system items and cutoff temporary pile per the Special Provisions
17) Install riprap
18) Perform designated deck repairs

LEGEND:

= Causeway (See Roadway plans for Causeway Options)

= Riprap

FILE = S:\PROJECTS\2017\1087J17-KCH\DESIGN\CAD_SHEETS\1087J17-Substructure Repairs and Sequence.dgn

WILLETT HOFMANN & ASSOCIATES INC
ENGINEERING ARCHITECTURE LAND SURVEYING
809 EAST 2ND STREET, DIXON, IL 61021-0367
T: 815-284-3381 DESIGN FIRM: #184-000918

DESIGNED - SM	REVISED -	LASALLE & KENDALL COUNTY FAS 171(CH 3-MILLINGTON RD) OVER FOX RIVER STATION 20+00	SUBSTRUCTURE REPAIRS AND SEQUENCE STRUCTURE NO. 047-3000
CHECKED - PLP	REVISED -		
DRAWN - RDA	REVISED -		
CHECKED - BKC	REVISED -		STRUCTURAL SHEET NO. 3 OF 67 SHEETS

FAS RTE.	SECTION	COUNTY	TOTAL SHEETS	SHEET NO.
171	17-00802-00-BR	LASALLE	93	15
	17-00142-00-BR	KENDALL		

WHA# 1087J17 | ILLINOIS | FED. AID PROJECT WZPE(199) | CONTRACT NO. 87683

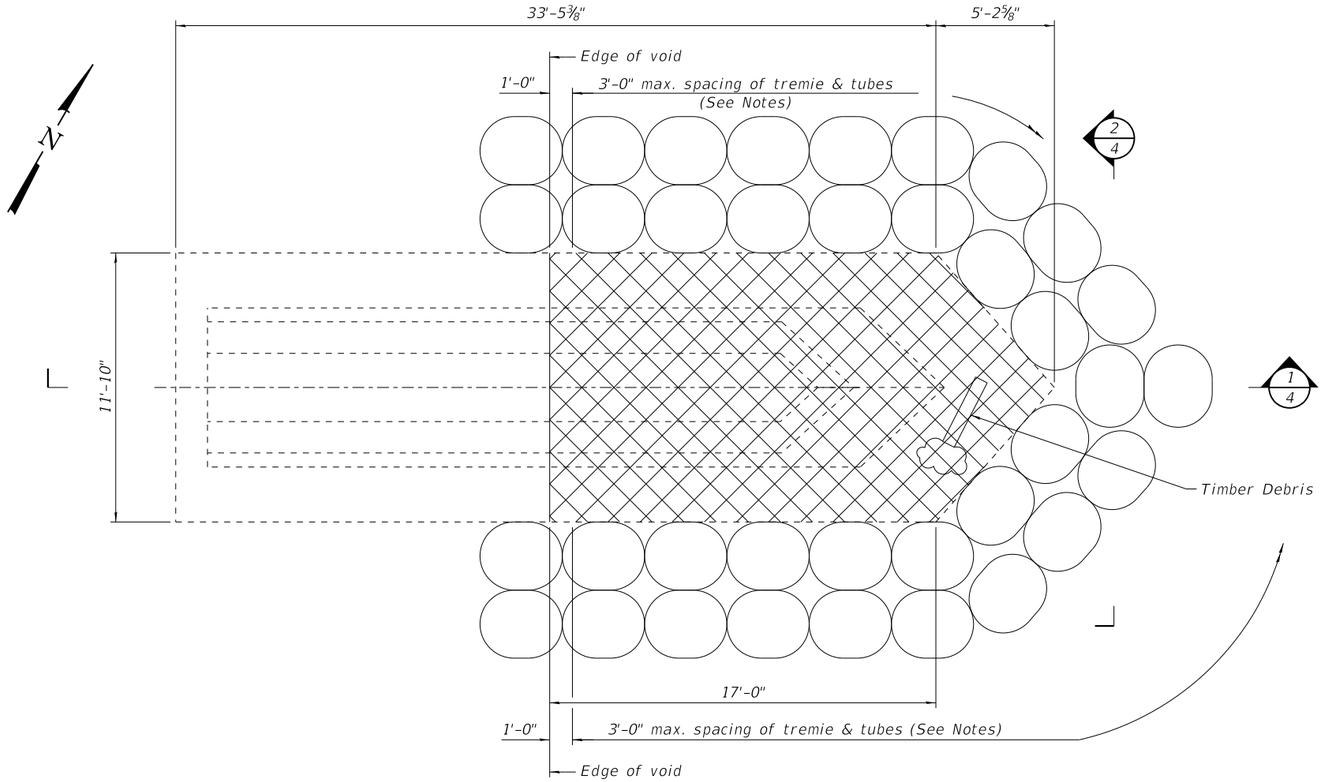

PLAN VIEW - PIER 2

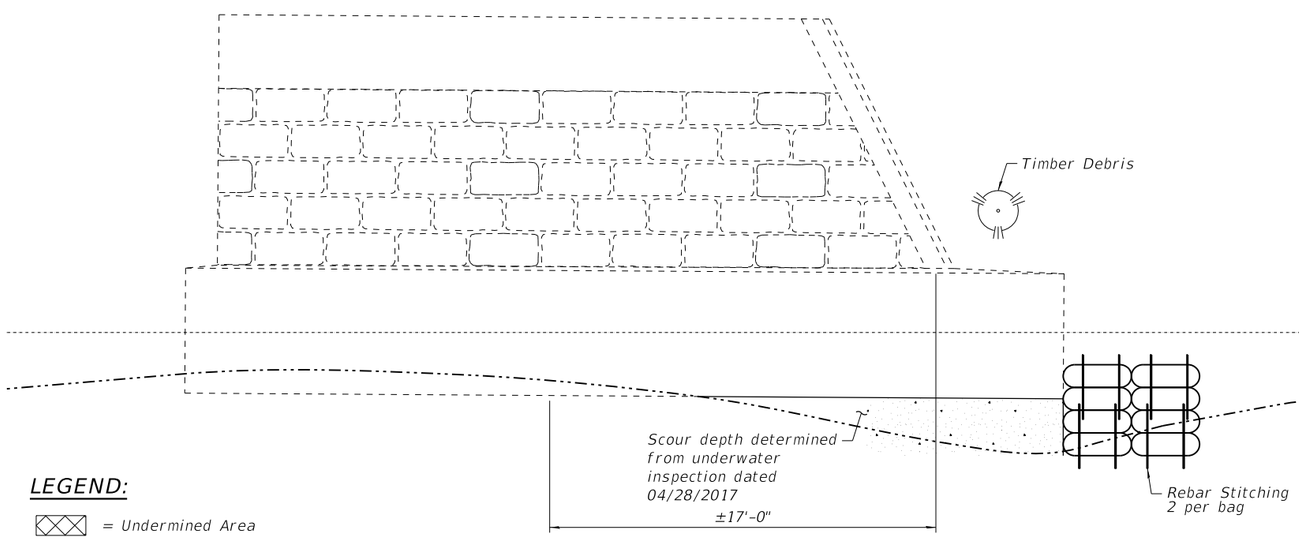

1/4 SECTION
Existing bearings and riveted PL girder not shown.

GENERAL NOTES:

Remove unstable material, timber debris, along bottom of undermined area prior to bag placement and filling with grout.

Stack grout bags along face of pier in front of undermined area. Bags stacked in successive rows and tiers shall be staggered.

Once vent/fill pipes have been installed and bags are filled, pump grout into the undermined area until material appears in the top of adjacent vent pipes. Cut or remove the vent/fill pipes flush with the top of the bags after pumping operation is complete.

Adequate venting of water to be displaced in the undermined area is important. The water must be able to escape when displaced by grout pumped into the cavity. A max. 3ft spacing of vent /fill pipes is recommended.

Keep nozzle buried in the grout during pumping to reduce the amount of mixing of the grout and water to be displaced.

All bags shall be 1ft max. thick. 3ft max. wide and 4ft max. long.

Plan dimensions and details relative to existing plans are subject to nominal construction variations. The Contractor shall field verify existing dimensions and details affecting new construction and make necessary approved adjustments prior to construction or ordering of materials. Such variations shall not be cause for additional compensation for a change in scope of the work, however, the Contractor will be paid for the quantity actually furnished at the unit price bid for the work.

See special provisions for other material, construction, and removal requirements.

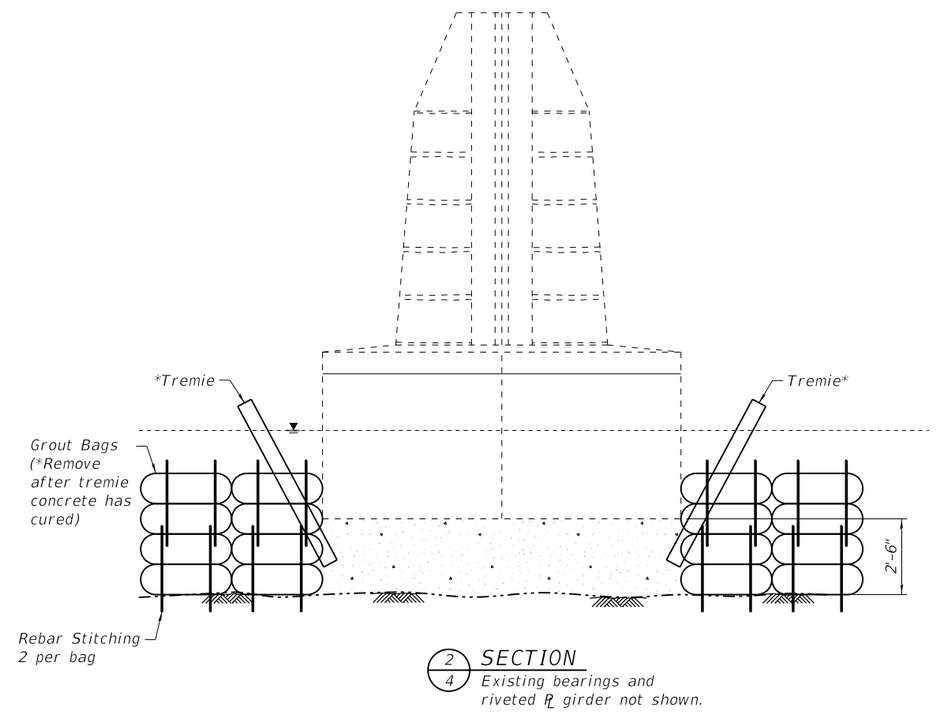

2/4 SECTION
Existing bearings and riveted PL girder not shown.

LEGEND:

= Undermined Area

= Tremie Concrete*

BILL OF MATERIAL

ITEM	UNIT	QUANTITY
Substructure Repair (Grout Bags)	L. Sum	1
Debris Removal	L. Sum	1

*Cost to be included with Substructure Repair (Grout bags)

WILLETT HOFMANN & ASSOCIATES INC
ENGINEERING ARCHITECTURE LAND SURVEYING
809 EAST 2ND STREET, DIXON, IL 61021-0367
T: 815-284-3381 DESIGN FIRM: #184-000918

DESIGNED - BKC	REVISED -		
CHECKED - PLP	REVISED -		
DRAWN - RDA	REVISED -		
CHECKED - BKC	REVISED -		

LASALLE & KENDALL COUNTY
FAS 171(CH 3–MILLINGTON RD) OVER FOX RIVER
STATION 20+00

PHASE 1: GROUT REPAIRS AND DEBRIS REMOVAL
STRUCTURE NO. 047-3000

STRUCTURAL SHEET NO. 4 OF 67 SHEETS

FAS RTE.	SECTION	COUNTY	TOTAL SHEETS	SHEET NO.
171	17-00802-00-BR	LASALLE	93	16
	17-00142-00-BR	KENDALL		

WHA# 1087J17 ILLINOIS FED. AID PROJECT WZPE(199) CONTRACT NO. 87683

FILE = S:\PROJECTS\2017\1087J17_KCH\DESIGN\CAD_SHEETS\1087J17_Debris Removal and Scour Repairs.dgn

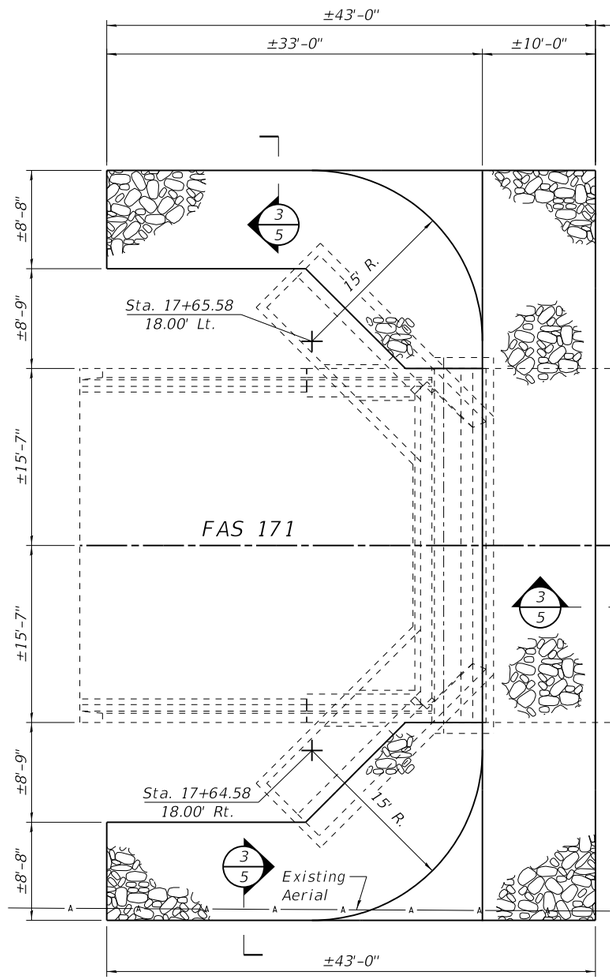

SOUTH ABUTMENT

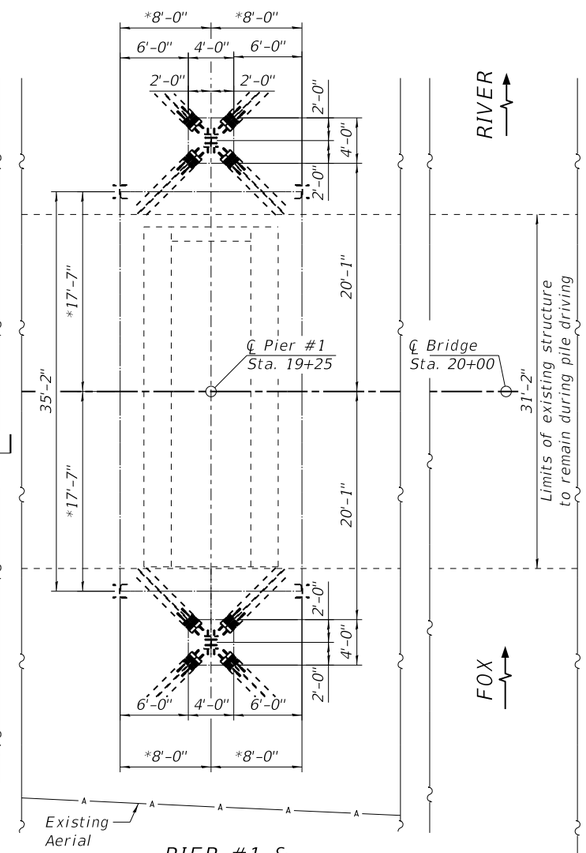

PIER #1 &
TEMPORARY SUPPORT SYSTEM

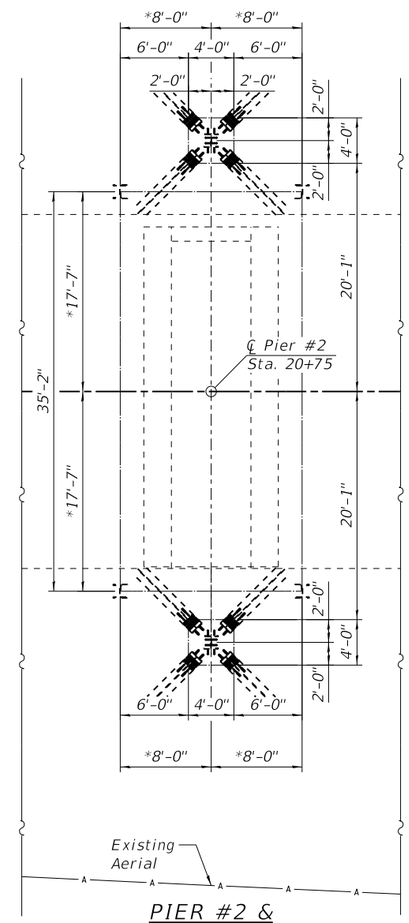

PIER #2 &
TEMPORARY SUPPORT SYSTEM

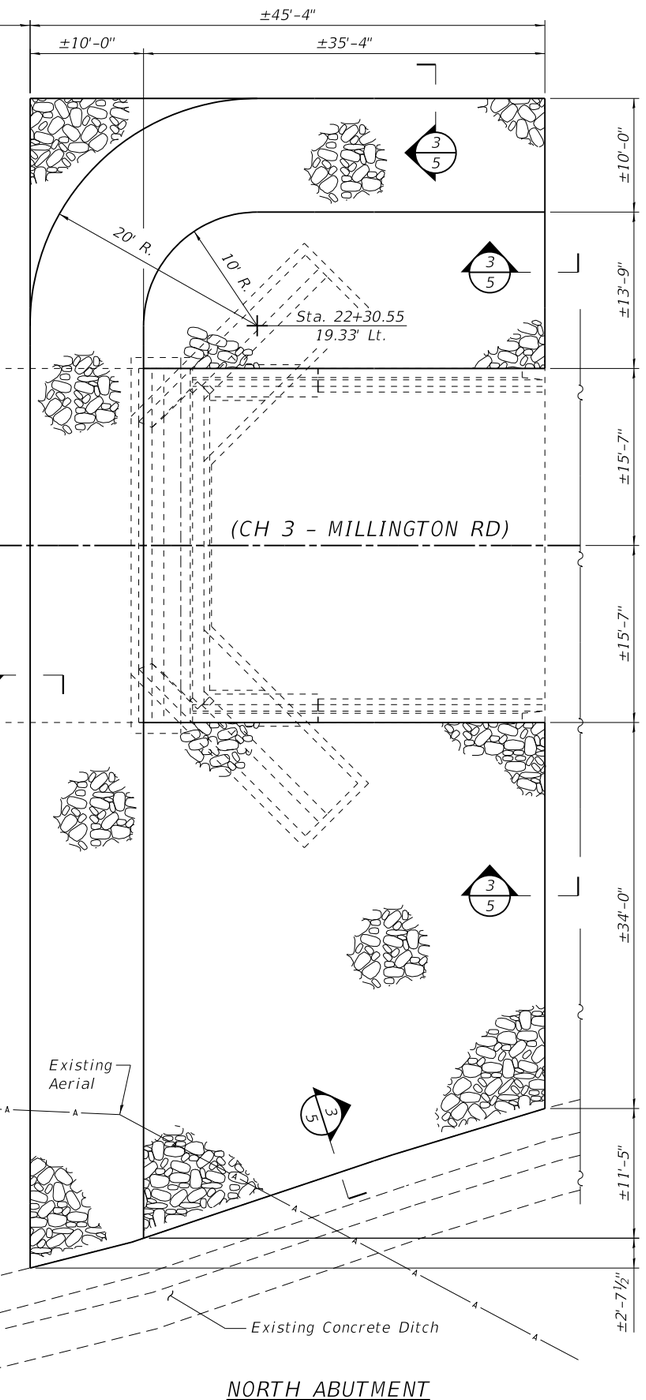

NORTH ABUTMENT

*** Extend to exist. wingwall/abut. faces per above; match exist. ground elevations

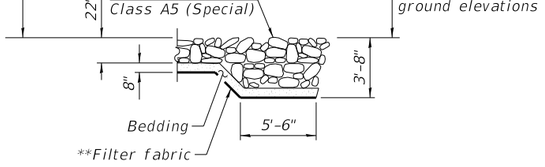

3/5 SECTION

PLAN VIEW

Existing superstructure, ℄ girders and diaphragms (to remain during pile driving) not shown for clarity.

Dimensions to battered piles are with respect to ℄ of pile intersecting at Elev. 539.33.

N

* Indicates Temporary Piles to be driven after grout repairs. See structural sheet 4 of 67.

BILL OF MATERIAL

Item	Unit	Quantity
Stone Riprap, Class A5 (Special)	Ton	900

**Cost to be included with Stone Riprap, Class A5 (Special)

***See Special Provisions

FILE = S:\PROJECTS\2017\1087J17_KCH\DESIGN\CAD_SHEETS\1087J17_Riprap & Pile layout.dgn

WILLETT HOFMANN & ASSOCIATES INC
ENGINEERING ARCHITECTURE LAND SURVEYING
809 EAST 2ND STREET, DIXON, IL 61021-0367
T: 815-284-3381 DESIGN FIRM: #184-000918

DESIGNED - SM	REVISED -		
CHECKED - PLP	REVISED -		
DRAWN - FDL	REVISED -		
CHECKED - BKC	REVISED -		

LASALLE & KENDALL COUNTY
FAS 171(CH 3–MILLINGTON RD) OVER FOX RIVER
STATION 20+00

PHASE 1: RIPRAP AND PILE LAYOUT
STRUCTURE NO. 047-3000

STRUCTURAL SHEET NO. 5 OF 67 SHEETS

FAS RTE.	SECTION	COUNTY	TOTAL SHEETS	SHEET NO.
171	17-00802-00-BR	LASALLE	93	17
	17-00142-00-BR	KENDALL		

WHA* 1087J17 | ILLINOIS | FED. AID PROJECT WZPE(199) | CONTRACT NO. 87683

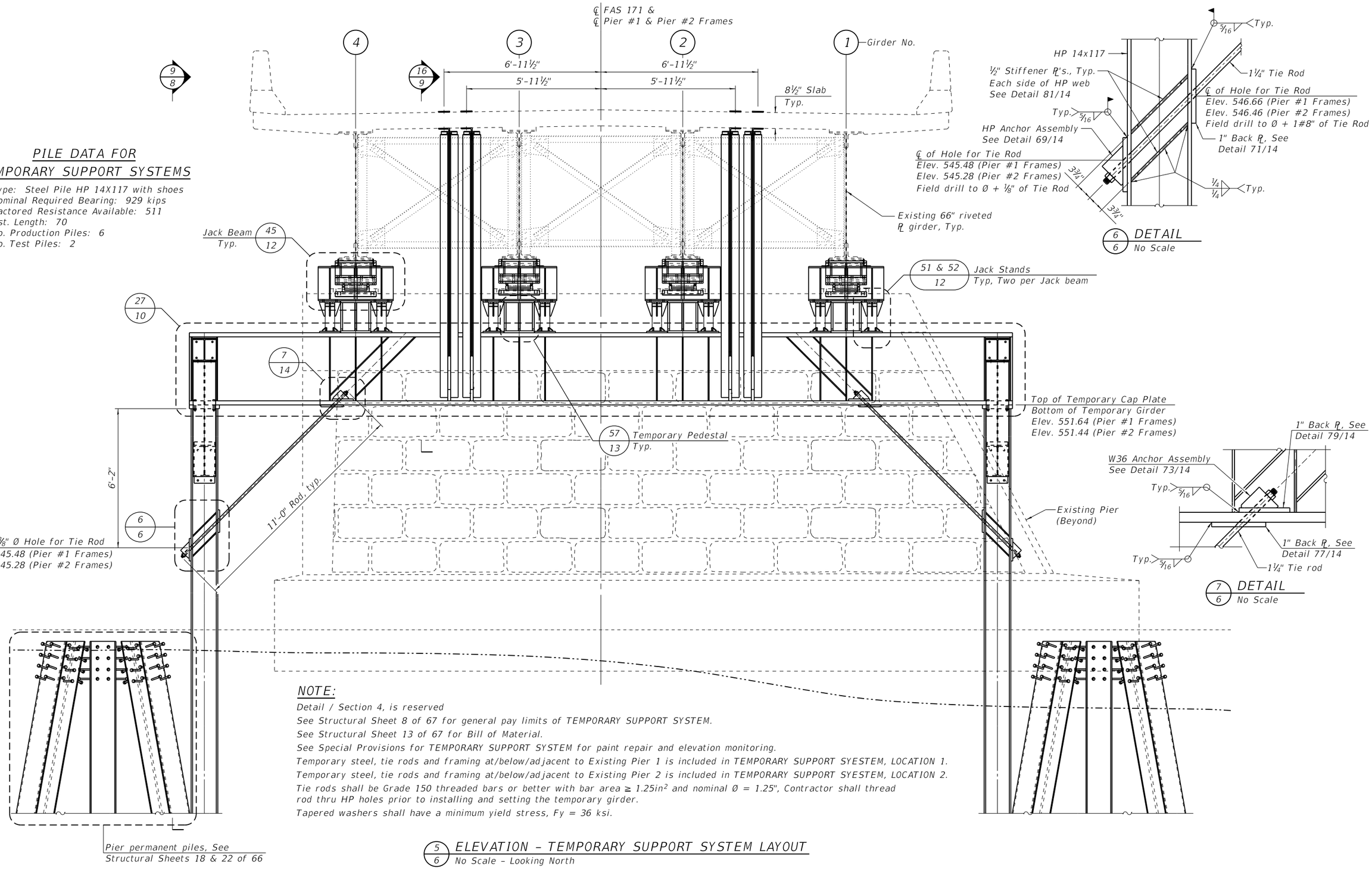

NOTE:

Detail / Section 4, is reserved

See Structural Sheet 8 of 67 for general pay limits of TEMPORARY SUPPORT SYSTEM.

See Structural Sheet 13 of 67 for Bill of Material.

See Special Provisions for TEMPORARY SUPPORT SYSTEM for paint repair and elevation monitoring.

Temporary steel, tie rods and framing at/below/adjacent to Existing Pier 1 is included in TEMPORARY SUPPORT SYESTEM, LOCATION 1.

Temporary steel, tie rods and framing at/below/adjacent to Existing Pier 2 is included in TEMPORARY SUPPORT SYESTEM, LOCATION 2.

Tie rods shall be Grade 150 threaded bars or better with bar area ≥ 1.25in^2 and nominal Ø = 1.25", Contractor shall thread rod thru HP holes prior to installing and setting the temporary girder.

Tapered washers shall have a minimum yield stress, Fy = 36 ksi.

5/6 ELEVATION - TEMPORARY SUPPORT SYSTEM LAYOUT
No Scale - Looking North

FILE = S:\PROJECTS\2017\1087J17-KCH\DESIGN\CAD_SHEETS\1087J17-Pier Support Details.dgn

WILLETT HOFMANN & ASSOCIATES INC
ENGINEERING ARCHITECTURE LAND SURVEYING
809 EAST 2ND STREET, DIXON, IL 61021-0367
T: 815-284-3381 DESIGN FIRM: #184-000918

DESIGNED - SM	REVISED -		
CHECKED - PLP	REVISED -		
DRAWN - FDL	REVISED -		
CHECKED - BKC	REVISED -		

LASALLE & KENDALL COUNTY
FAS 171(CH 3-MILLINGTON RD) OVER FOX RIVER
STATION 20+00

PHASE 2: TEMPORARY SUPPORT SYSTEM
STRUCTURE NO. 047-3000

STRUCTURAL SHEET NO. 6 OF 67 SHEETS

FAS RTE.	SECTION	COUNTY	TOTAL SHEETS	SHEET NO.
171	17-00802-00-BR	LASALLE	93	18
	17-00142-00-BR	KENDALL		

WHA# 1087J17 | ILLINOIS | FED. AID PROJECT WZPE(199) | CONTRACT NO. 87683

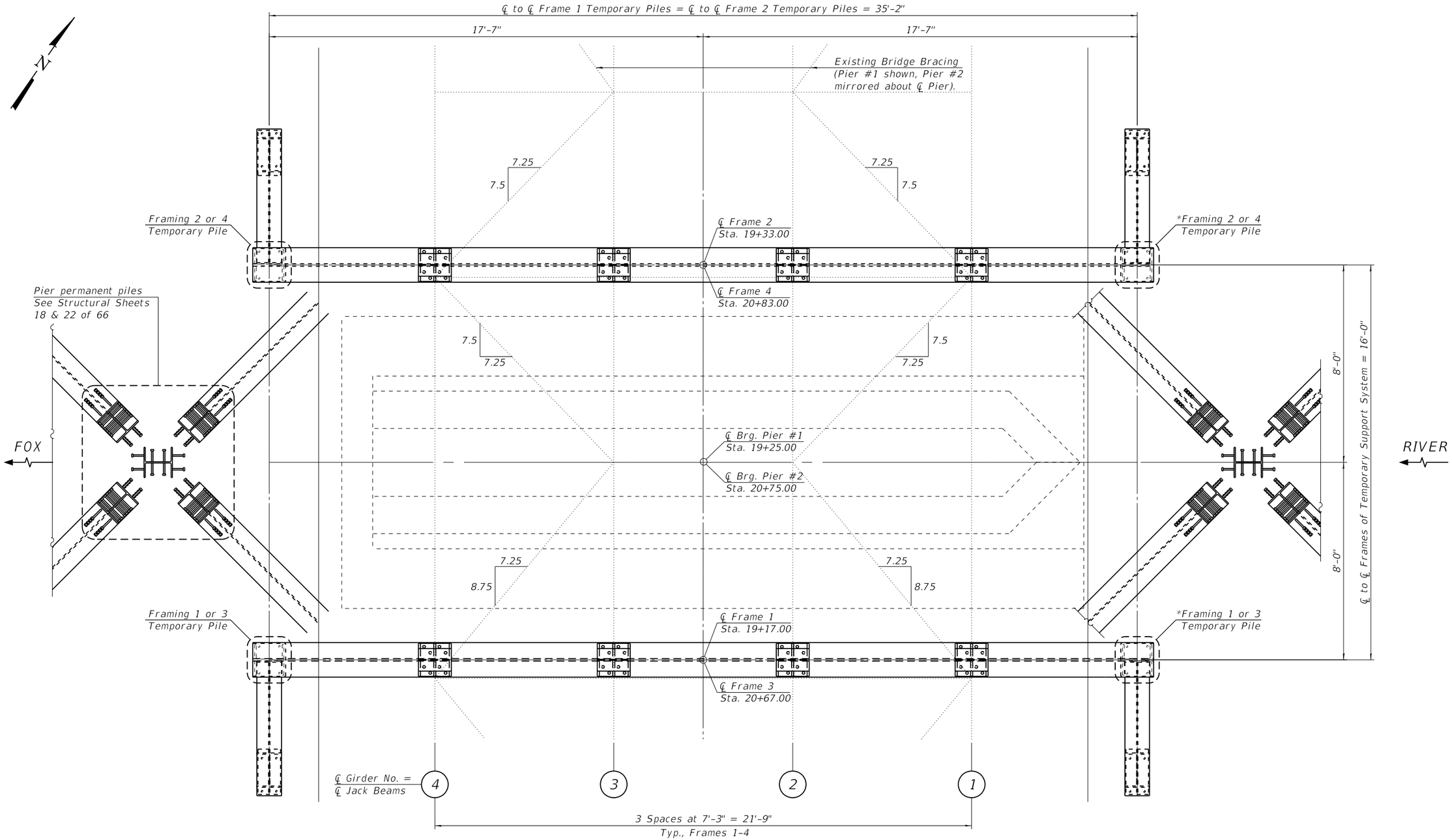

8/7 PLAN - TEMORARY SUPPORT SYSTEM LAYOUTS
No Scale

NOTE:

See Structural Sheets 31, 53, and 65 of 67 (existing plans) for layout of existing bridge bracing.

*Prior to installing Pier 2 upstream temporary piles, Contractor shall romove grout bags. See Structural sheet 4 of 67.

FILE = S:\PROJECTS\2017\1087J17_KCH\DESIGN\CAD_SHEETS\1087J17_Pier Support Details.dgn

WILLETT HOFMANN & ASSOCIATES INC
ENGINEERING ARCHITECTURE LAND SURVEYING
809 EAST 2ND STREET, DIXON, IL 61021-0367
T: 815-284-3381 DESIGN FIRM: #184-000918

DESIGNED - SM	REVISED -		
CHECKED - PLP	REVISED -		
DRAWN - FDL	REVISED -		
CHECKED - BKC	REVISED -		

LASALLE & KENDALL COUNTY
FAS 171(CH 3–MILLINGTON RD) OVER FOX RIVER
STATION 20+00

PHASE 2: TEMPORARY SUPPORT SYSTEM
STRUCTURE NO. 047-3000

STRUCTURAL SHEET NO. 7 OF 67 SHEETS

FAS RTE.	SECTION	COUNTY	TOTAL SHEETS	SHEET NO.
171	17-00802-00-BR	LASALLE	93	19
	17-00142-00-BR	KENDALL		

WHA# 1087J17 ILLINOIS FED. AID PROJECT WZPE(199) CONTRACT NO. 87683

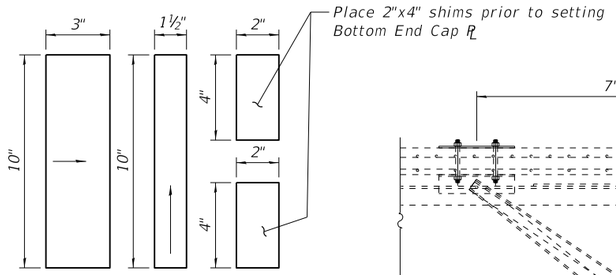

15/8 SHIMS
No Scale,
(No. req'd. 32 Ea.)
Arrows indicate direction
of shim installation

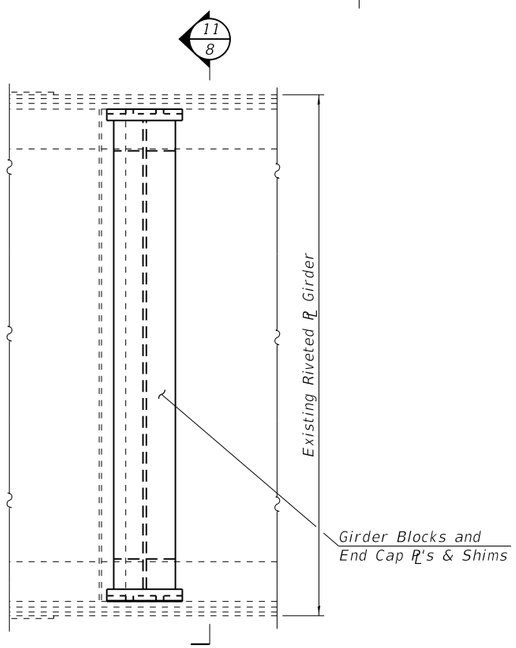

10/8 DETAIL - GIRDER BLOCKING
No Scale

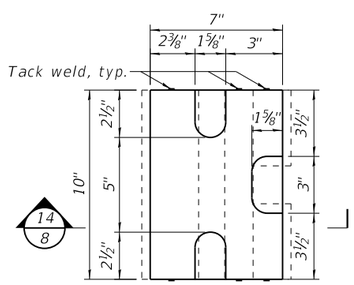

13/8 DETAIL - END CAP PL
No Scale
(No. req'd. = 64)

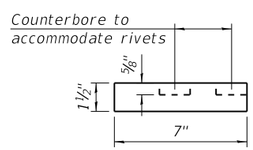

14/8 SECTION - END CAP PL
No Scale

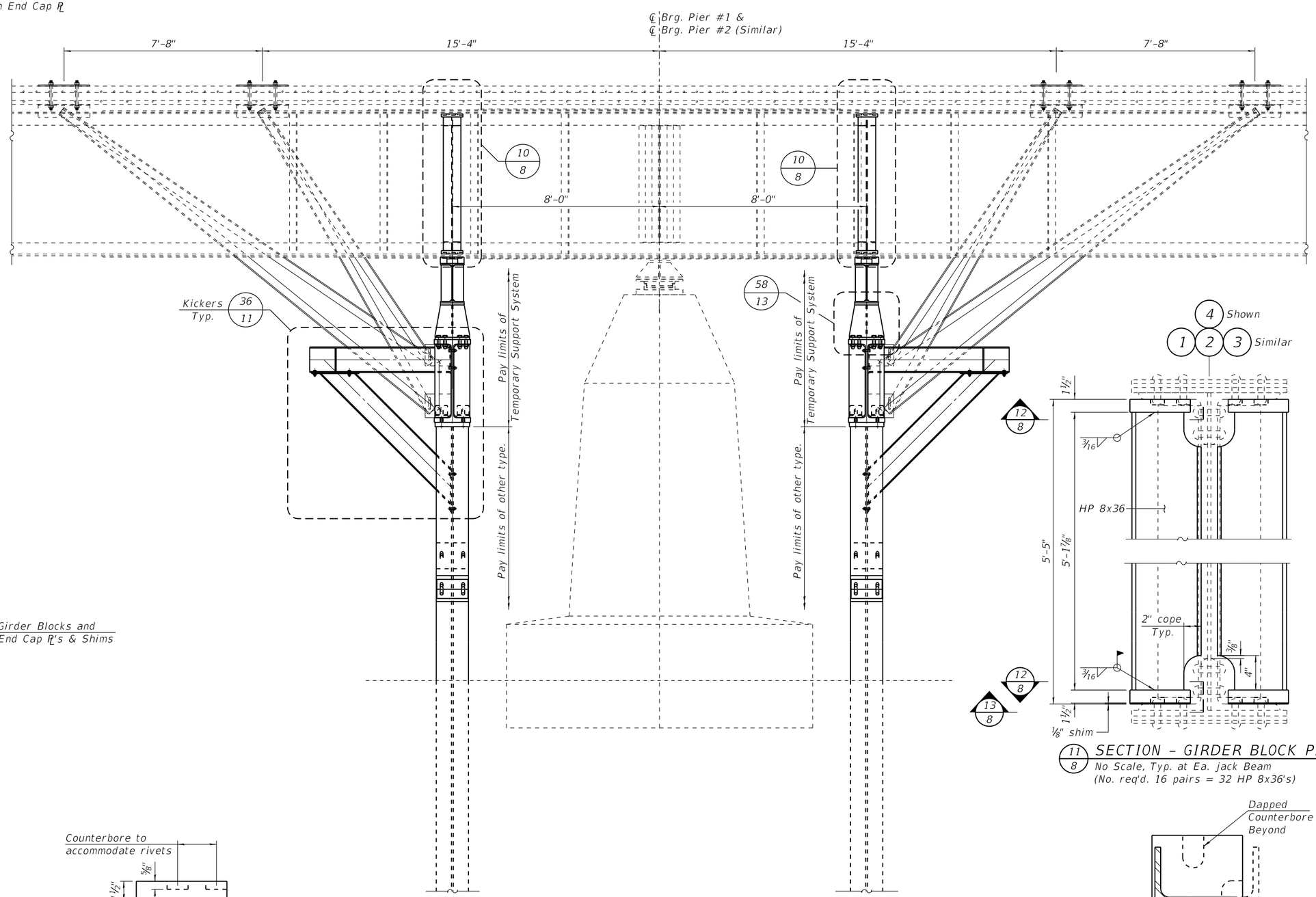

9/8 SIDE VIEW - TEMPORARY SUPPORT SYSTEM LAYOUT
No Scale - Upstream - Looking West
Jacks & Jack Stands omitted for clarity

NOTE:
Field welding of Bottom End Cap PL and Tack Welding of Bottom Shims shall be performed prior to application of the jacking loads on Structural Sheet 15 of 67.

11/8 SECTION - GIRDER BLOCK PAIR
No Scale, Typ. at Ea. jack Beam
(No. req'd. 16 pairs = 32 HP 8x36's)

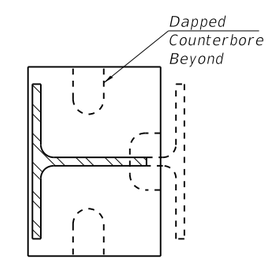

12/8 SECTION - GIRDER BLOCKING
No Scale

FILE = S:\PROJECTS\2017\1087J17_KCH\DESIGN\CAD_SHEETS\1087J17_Pier Support Details.dgn

WILLETT HOFMANN & ASSOCIATES INC
ENGINEERING ARCHITECTURE LAND SURVEYING
809 EAST 2ND STREET, DIXON, IL 61021-0367
T: 815-284-3381 DESIGN FIRM: #184-000918

DESIGNED - SM	REVISED -	
CHECKED - PLP	REVISED -	
DRAWN - FDL	REVISED -	
CHECKED - BKC	REVISED -	

LASALLE & KENDALL COUNTY
FAS 171(CH 3–MILLINGTON RD) OVER FOX RIVER
STATION 20+00

PHASE 2: TEMPORARY SUPPORT SYSTEM
STRUCTURE NO. 047-3000

STRUCTURAL SHEET NO. 8 OF 67 SHEETS

FAS RTE.	SECTION	COUNTY	TOTAL SHEETS	SHEET NO.
171	17-00802-00-BR	LASALLE	93	20
	17-00142-00-BR	KENDALL		

WHA* 1087J17 ILLINOIS FED. AID PROJECT WZPE(199) CONTRACT NO. 87683

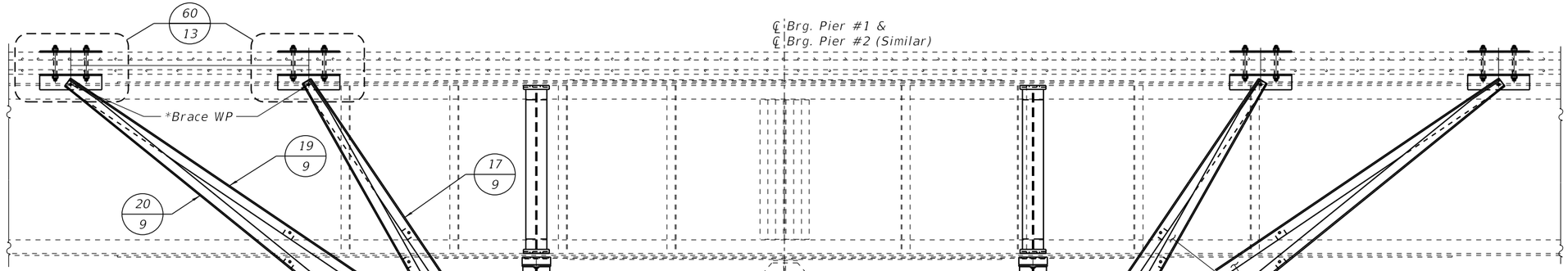

NOTES:

*After installation of the Temporary Girder but prior to erection of the Lateral Bracing and Deck Connections to the Bracing, the Contractor shall:

1) Field measure the length between the "Slotted WP" and the "Brace WP"
2) Drill holes in deck for the 1¼" Ø Threaded Rods to align the Connection L "Brace WP" to the "Slotted WP"
3) Field-drill the "Brace WP" holes
4) Verify length of the Lateral Bracing for the field-measurement in (1). Trim Lateral Bracing as necessary, and field-drill the holes in the Lateral Bracing

Contractor shall order Lateral Braces 1'-0" larger than shown in Details 17-20 to account for field variance.

Field welding of Short and Long Lateral Bracing to the Temporary Girder Connection PLs shall be performed after the superstructure has been jacked to the Raised Position per Structural Sheet 15 of 67.

16/9 SECTION - TEMPORARY BRACING
No Scale - Upstream - Looking West
Jacks & Jack Stands omitted for clarity

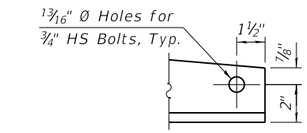

24/9 DETAIL AT DECK
No Scale

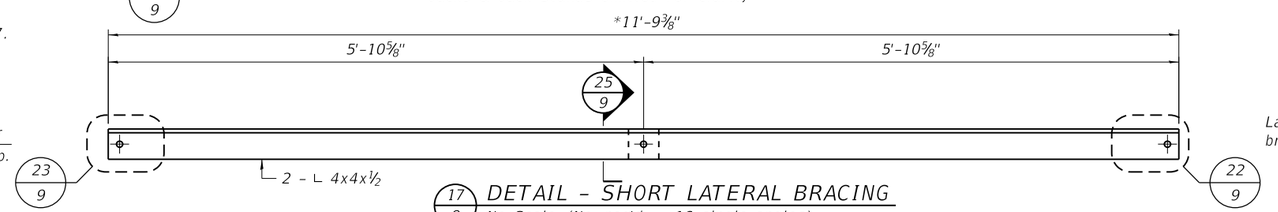

17/9 DETAIL - SHORT LATERAL BRACING
No Scale, (No. req'd. = 16 single angles)

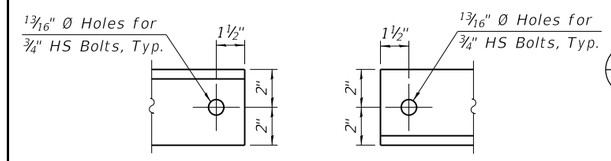

22/9 DETAIL AT DECK
No Scale
Field drill

23/9 DETAIL AT TEMPORARY GIRDER
No Scale
Field drill

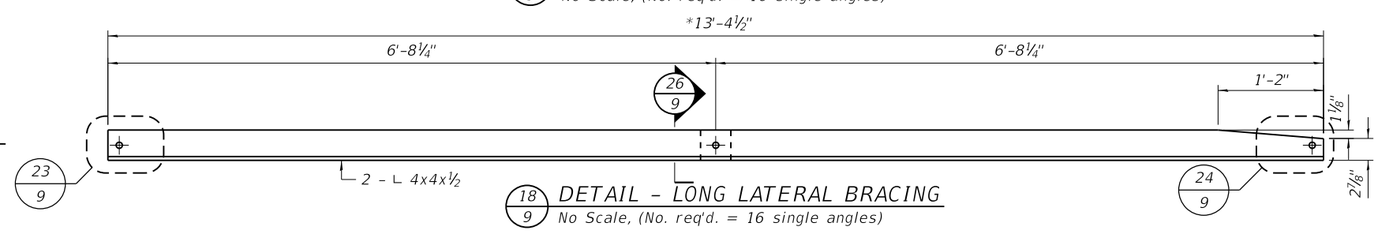

18/9 DETAIL - LONG LATERAL BRACING
No Scale, (No. req'd. = 16 single angles)

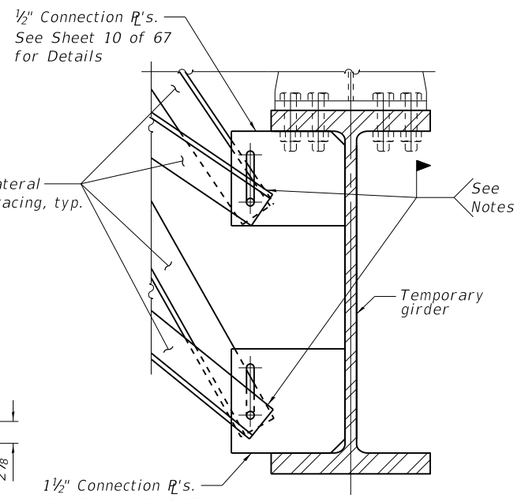

21/9 DETAIL
No Scale

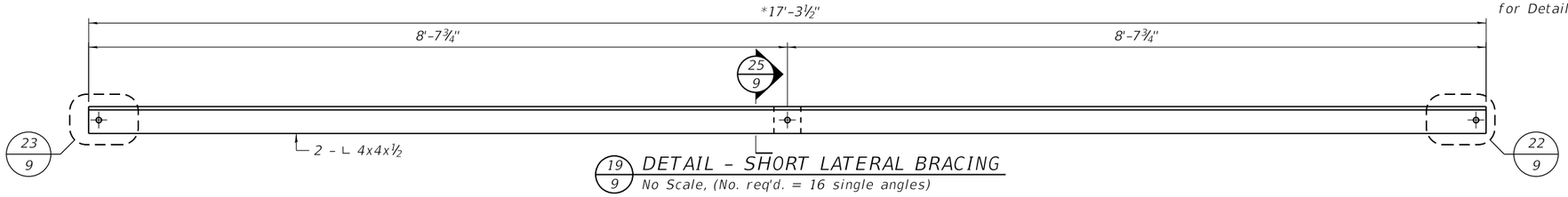

19/9 DETAIL - SHORT LATERAL BRACING
No Scale, (No. req'd. = 16 single angles)

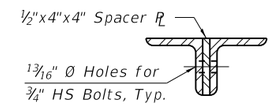

25/9 SECTION - SPACER PL
No Scale, (No. req'd. = 16)

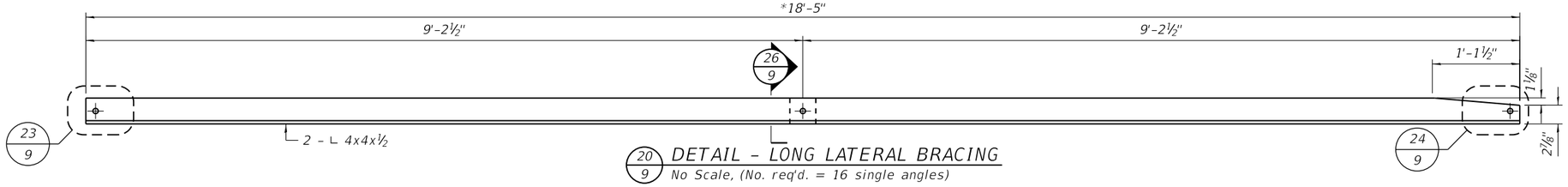

20/9 DETAIL - LONG LATERAL BRACING
No Scale, (No. req'd. = 16 single angles)

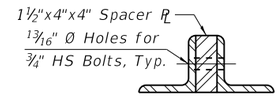

26/9 SECTION - SPACER PL
No Scale, (No. req'd. = 16)

WILLETT HOFMANN & ASSOCIATES, INC
ENGINEERING ARCHITECTURE LAND SURVEYING
809 EAST 2ND STREET, DIXON, IL 61021-0367
T: 815-284-3381 DESIGN FIRM: #184-000918

DESIGNED - SM	REVISED -		
CHECKED - PLP	REVISED -		
DRAWN - FDL	REVISED -		
CHECKED - BKC	REVISED -		

LASALLE & KENDALL COUNTY
FAS 171(CH 3-MILLINGTON RD) OVER FOX RIVER
STATION 20+00

PHASE 2: TEMPORARY SUPPORT SYSTEM
STRUCTURE NO. 047-3000

STRUCTURAL SHEET NO. 9 OF 67 SHEETS

FAS RTE.	SECTION	COUNTY	TOTAL SHEETS	SHEET NO.
171	17-00802-00-BR	LASALLE	93	21
	17-00142-00-BR	KENDALL		

WHA* 1087J17 | ILLINOIS | FED. AID PROJECT WZPE(199) | CONTRACT NO. 87683

FILE = S:\PROJECTS\2017\1087J17_KCH\DESIGN\CAD_SHEETS\1087J17_Pier Support Details.dgn

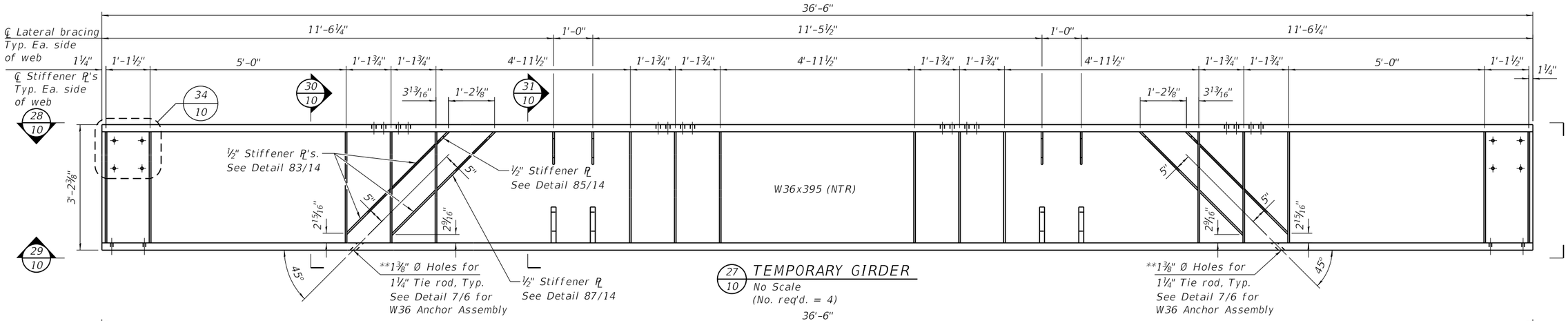

27/10 TEMPORARY GIRDER
No Scale
(No. req'd. = 4)

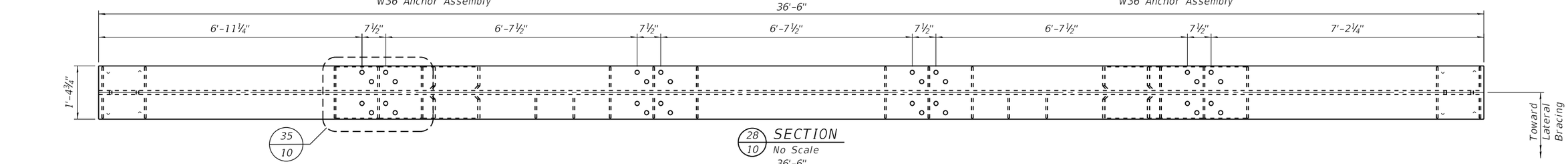

28/10 SECTION
No Scale
36'-6"

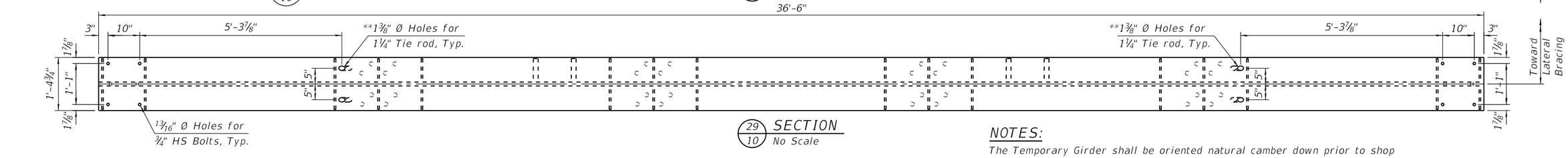

29/10 SECTION
No Scale

NOTES:

The Temporary Girder shall be oriented natural camber down prior to shop drilling of holes, installation of plates, and field installation.

Load carrying components designated "NTR" shall conform to the Impact Testing Requirement, Zone 2.

*See Structural shee 9 of 67.

**Confirm Ø of hole is Ø + ⅛" of tied rod prior to shop drilling.

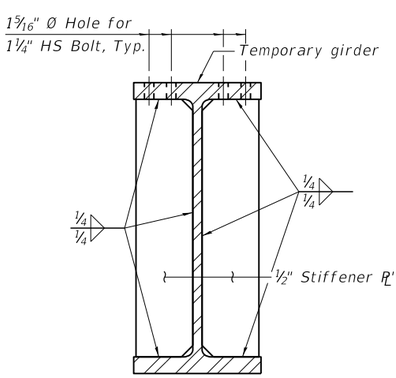

30/10 SECTION
No Scale

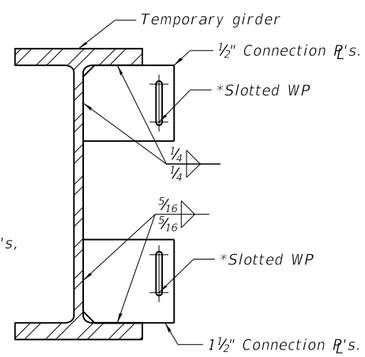

31/10 SECTION
No Scale

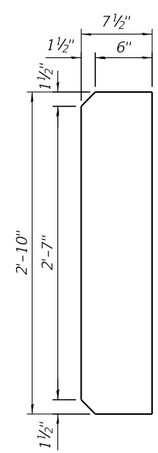

32/10 ½" STIFFENER PL
No Scale
(No. req'd. = 128)

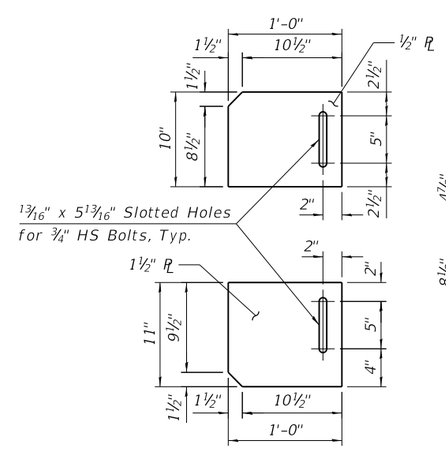

33/10 CONNECTION PL SET
No Scale
(No. req'd. = 16 Sets)

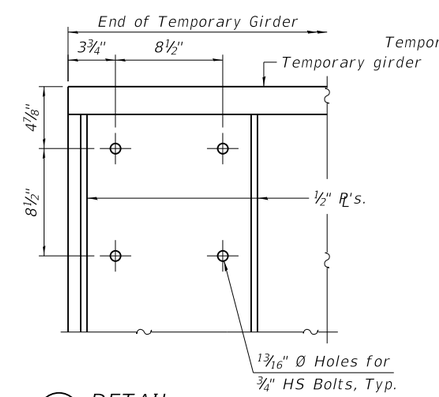

34/10 DETAIL
No Scale (Typical 2 Locations)

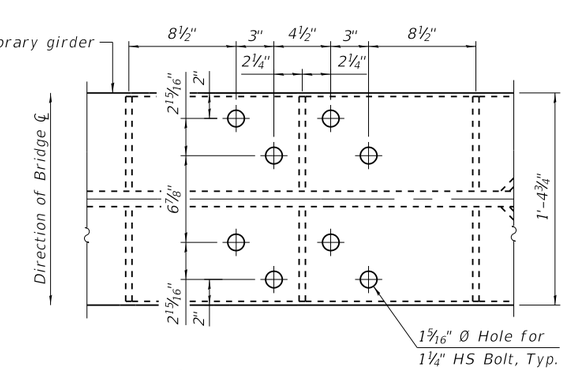

35/10 DETAIL
No Scale (Typical 4 Locations)

FILE = S:\PROJECTS\2017\1087J17_KCH\DESIGN\CAD_SHEETS\1087J17_Pier Support Details.dgn

WILLETT HOFMANN & ASSOCIATES INC
ENGINEERING ARCHITECTURE LAND SURVEYING
809 EAST 2ND STREET, DIXON, IL 61021-0367
T: 815-284-3381 DESIGN FIRM: #184-000918

DESIGNED - SM	REVISED -		
CHECKED - PLP	REVISED -		
DRAWN - FDL	REVISED -		
CHECKED - BKC	REVISED -		

LASALLE & KENDALL COUNTY
FAS 171(CH 3–MILLINGTON RD) OVER FOX RIVER
STATION 20+00

PHASE 2: TEMPORARY SUPPORT SYSTEM
STRUCTURE NO. 047-3000

STRUCTURAL SHEET NO. 10 OF 67 SHEETS

FAS RTE.	SECTION	COUNTY	TOTAL SHEETS	SHEET NO.
171	17-00802-00-BR	LASALLE	93	22
	17-00142-00-BR	KENDALL		

WHA# 1087J17 | ILLINOIS | FED. AID PROJECT WZPE(199) | CONTRACT NO. 87683

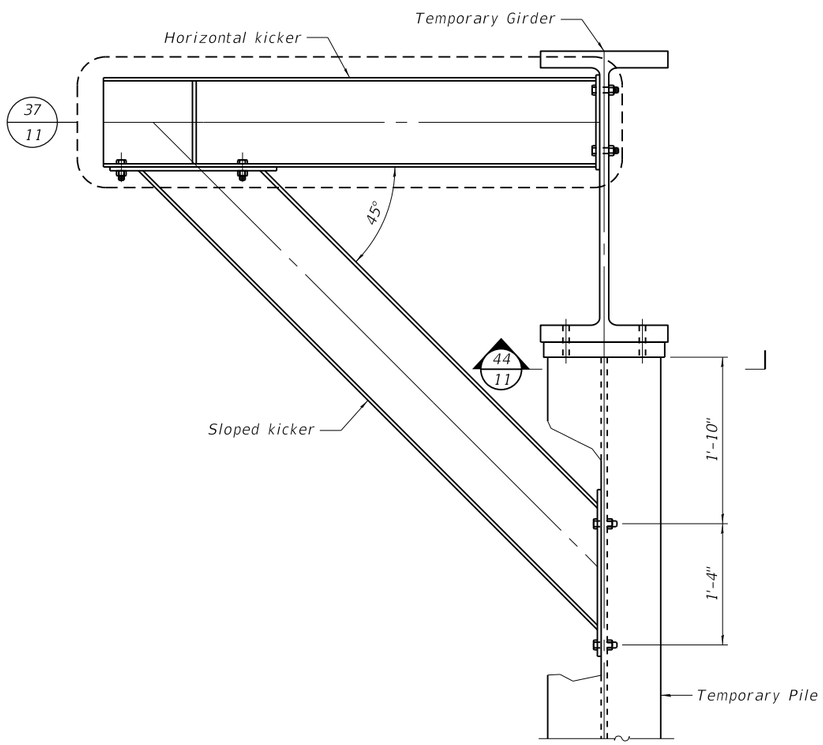

36/11 KICKER
No Scale

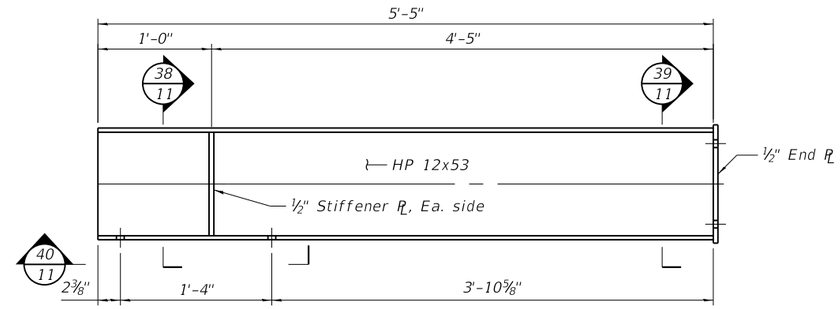

37/11 DETAIL - HORIZONTAL KICKER
No Scale
(No. req'd. = 8)

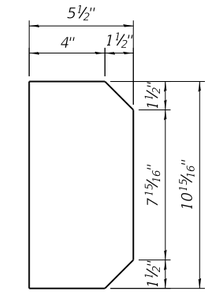

41/11 ½" STIFFENER PL
No Scale
(No. req'd. = 16)

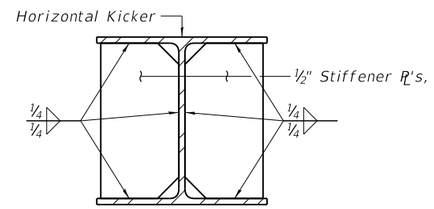

38/11 SECTION
No Scale

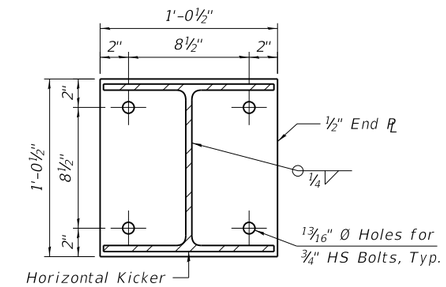

39/11 SECTION
No Scale
(No. End PL's req'd. = 8)

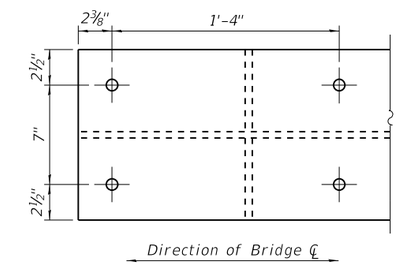

40/11 SECTION
No Scale

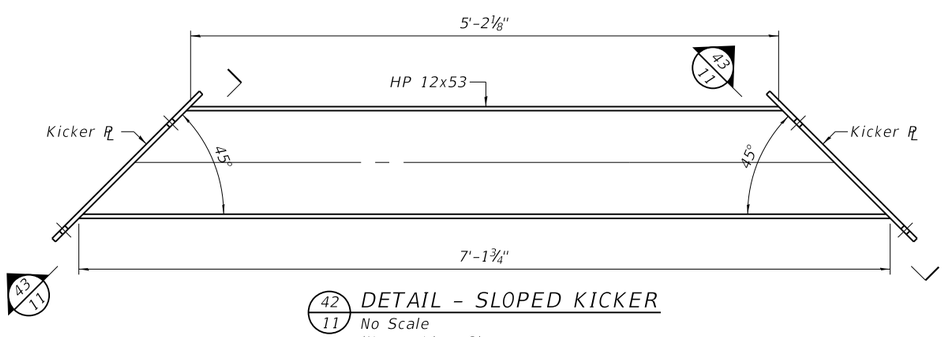

42/11 DETAIL - SLOPED KICKER
No Scale
(No. req'd. = 8)

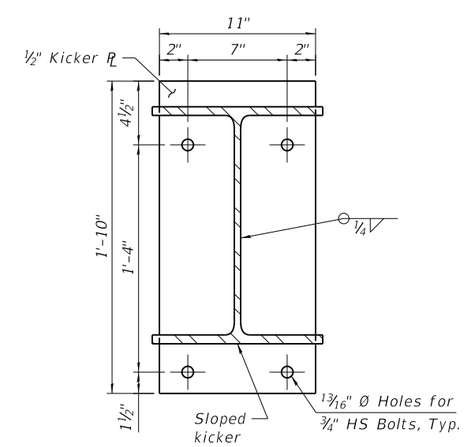

43/11 SECTION
No Scale
(No. req'd. = 16)

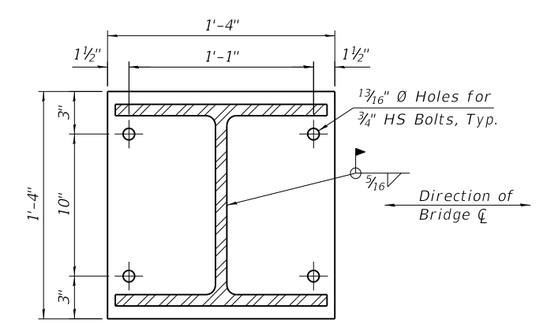

44/11 SECTION - 2" CAP PL
No Scale
(No. req'd. = 8)

FILE = S:\PROJECTS\2017\1087J17_KCH\DESIGN\CAD_SHEETS\1087J17_Pier Support Details.dgn

WILLETT HOFMANN & ASSOCIATES INC
ENGINEERING ARCHITECTURE LAND SURVEYING
809 EAST 2ND STREET, DIXON, IL 61021-0367
T: 815-284-3381 DESIGN FIRM: #184-000918

DESIGNED - SM	REVISED -	LASALLE & KENDALL COUNTY FAS 171(CH 3–MILLINGTON RD) OVER FOX RIVER STATION 20+00	PHASE 2: TEMPORARY SUPPORT SYSTEM STRUCTURE NO. 047-3000
CHECKED - PLP	REVISED -		
DRAWN - FDL	REVISED -		
CHECKED - BKC	REVISED -		STRUCTURAL SHEET NO. 11 OF 67 SHEETS

FAS RTE.	SECTION	COUNTY	TOTAL SHEETS	SHEET NO.
171	17-00802-00-BR	LASALLE	93	23
	17-00142-00-BR	KENDALL		

WHA# 1087J17 | ILLINOIS | FED. AID PROJECT WZPE(199) | CONTRACT NO. 87683

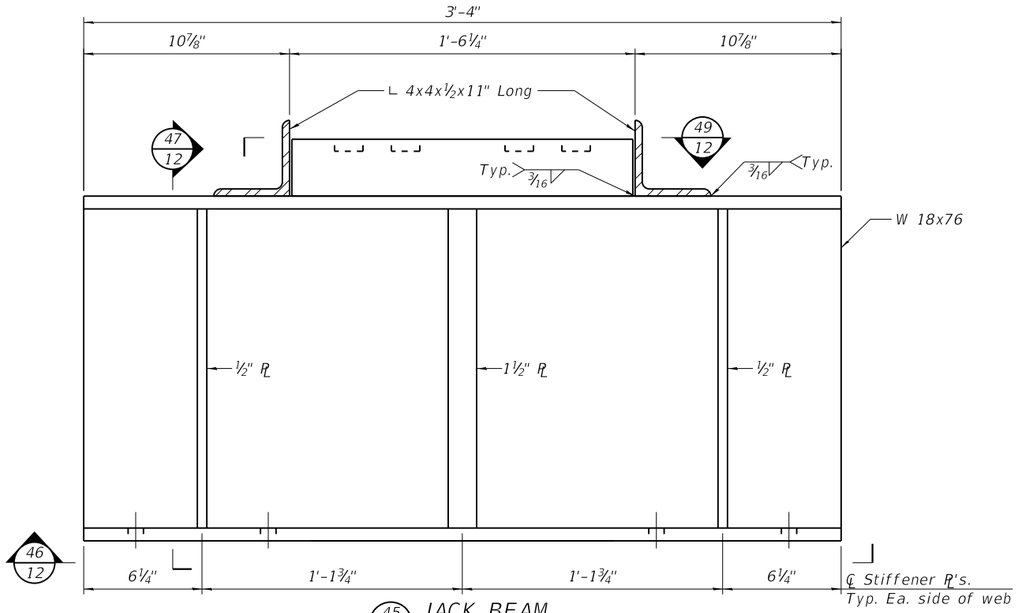

45 12 JACK BEAM
No Scale
(No. req'd. = 16 Jack Beam & 32 L 4x4)

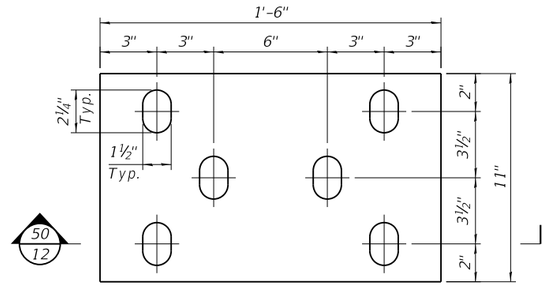

49 12 3" DAPPED PL
No Scale
(No. req'd. = 16)

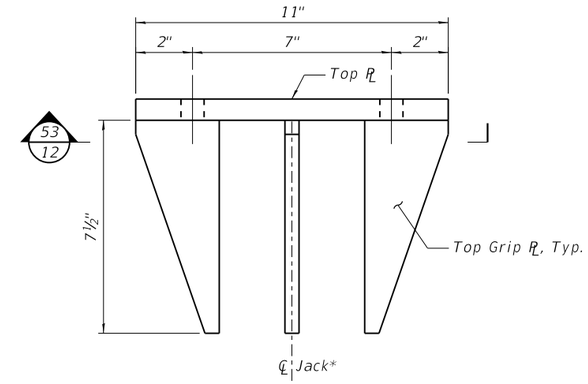

52 12 JACK STAND TOP
No Scale

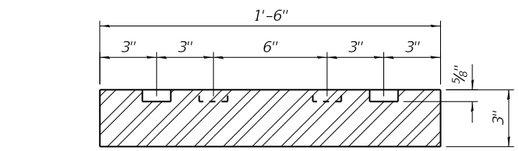

50 12 SECTION - 3" DAPPED PL
No Scale

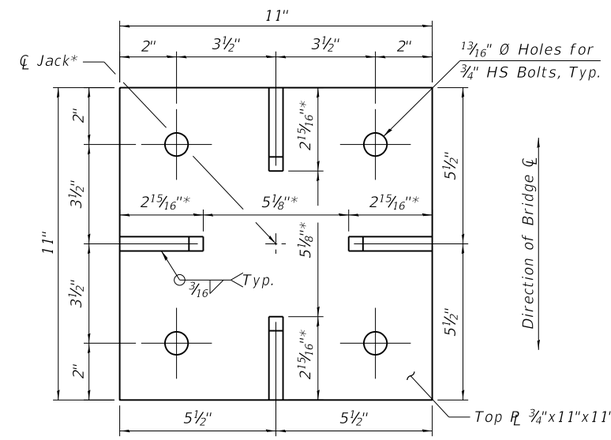

53 12 SECTION
No Scale
(No. req'd. = 32)

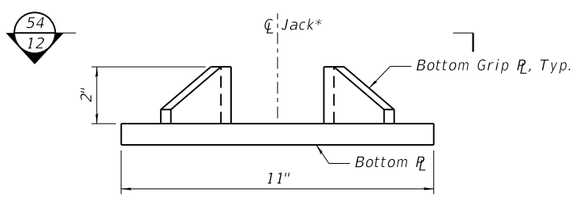

51 12 JACK STAND BOTTOM
No Scale

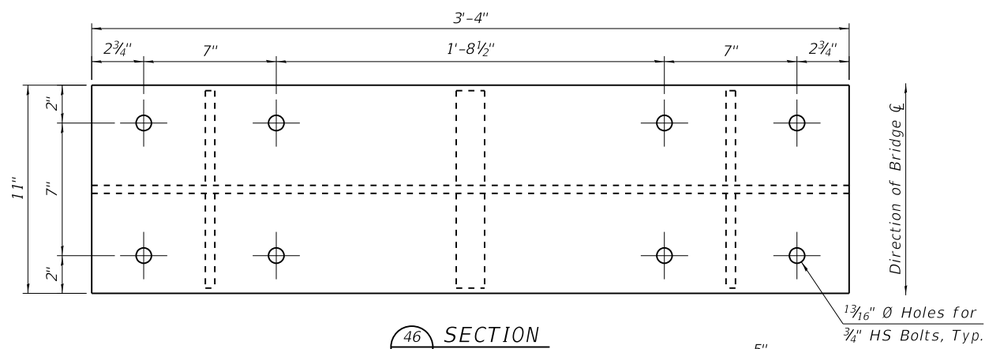

46 12 SECTION
No Scale

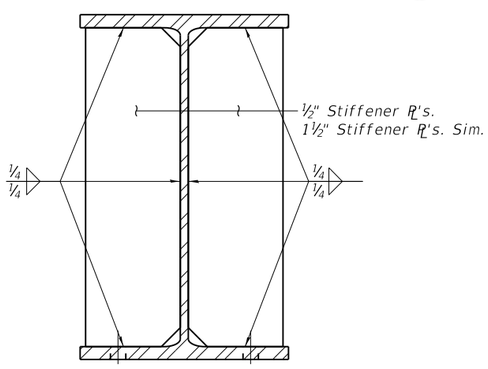

47 12 SECTION
No Scale

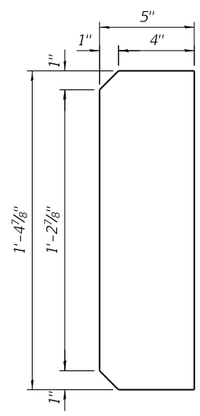

48 12 ½" & 1½" STIFFENER PL
No Scale
(No. req'd. = 64 - ½" PL & 32 - 1½" PL)

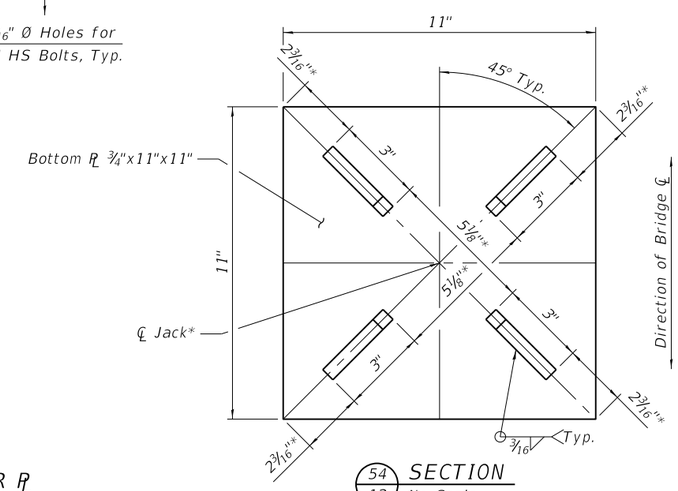

54 12 SECTION
No Scale
(No. req'd. = 32)

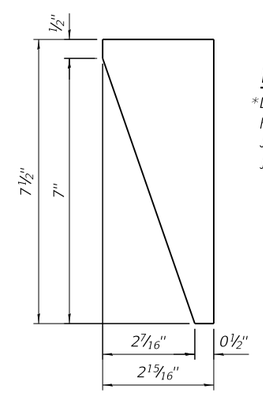

55 12 ½" TOP GRIP PL
No Scale
(No. req'd. = 128)

NOTE:

*Dimensions based on a 5" O.D. jack with 14-¾" minimum height (fully retracted piston). See Special Provisions for JACK AND REMOVE EXISTING BEARINGS if an alternate jack is chosen.

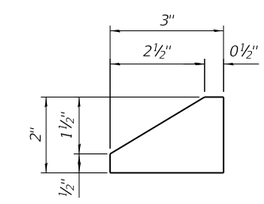

56 12 ½" BOTTOM GRIP PL
No Scale
(No. req'd. = 128)

WILLETT HOFMANN & ASSOCIATES INC
ENGINEERING ARCHITECTURE LAND SURVEYING
809 EAST 2ND STREET, DIXON, IL 61021-0367
T: 815-284-3381 DESIGN FIRM: #184-000918

DESIGNED - SM	REVISED -	LASALLE & KENDALL COUNTY FAS 171(CH 3-MILLINGTON RD) OVER FOX RIVER STATION 20+00	PHASE 2: TEMPORARY SUPPORT SYSTEM STRUCTURE NO. 047-3000
CHECKED - PLP	REVISED -		
DRAWN - FDL	REVISED -		
CHECKED - BKC	REVISED -		STRUCTURAL SHEET NO. 12 OF 67 SHEETS

FAS RTE.	SECTION	COUNTY	TOTAL SHEETS	SHEET NO.
171	17-00802-00-BR	LASALLE	93	24
	17-00142-00-BR	KENDALL		

WHA* 1087J17 ILLINOIS FED. AID PROJECT WZPE(199) CONTRACT NO. 87683

FILE = S:\PROJECTS\2017\1087J17_KCH\DESIGN\CAD_SHEETS\1087J17_Pier Support Details.dgn

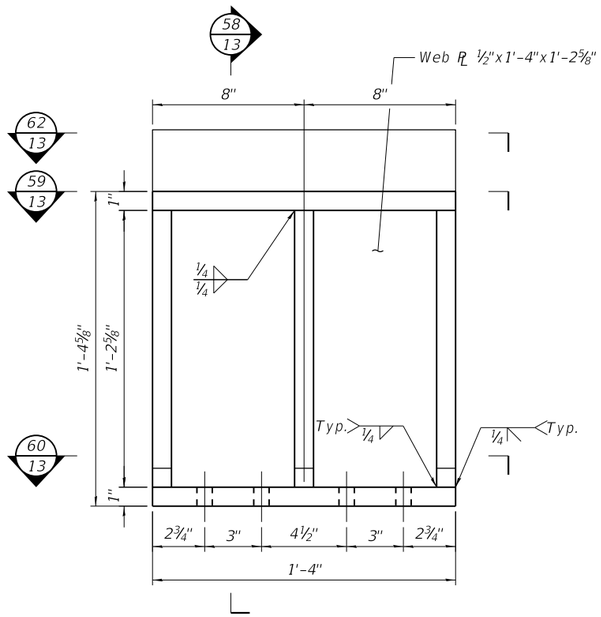

57/13 PEDESTAL
No Scale
(No. req'd. = 16 Web PL's.)
Pedistal Shim not shown

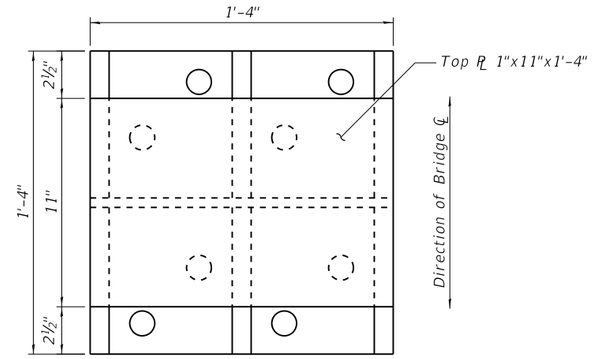

59/13 SECTION - TOP PL
No Scale
(No. req'd. = 16 Top PL's.)

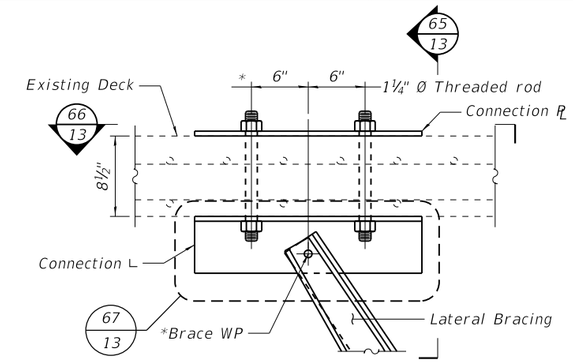

64/13 DETAIL - DECK CONNECTIONS
No Scale

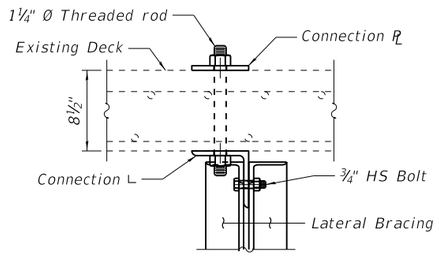

65/13 SECTION
No Scale

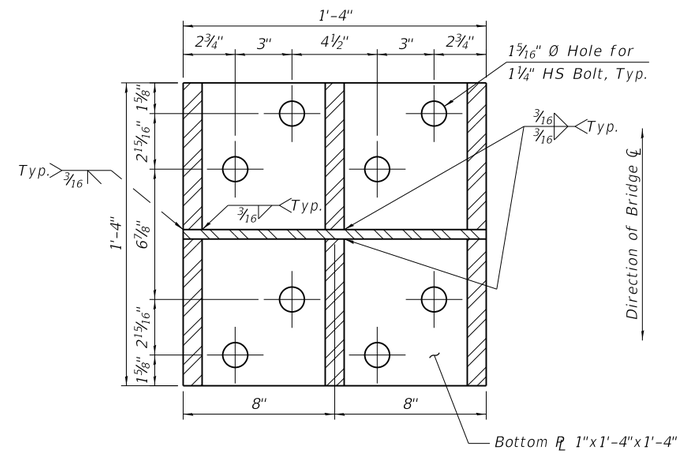

60/13 SECTION - BOTTOM PL
No Scale
(No. req'd. = 16 Bottom PL's.)

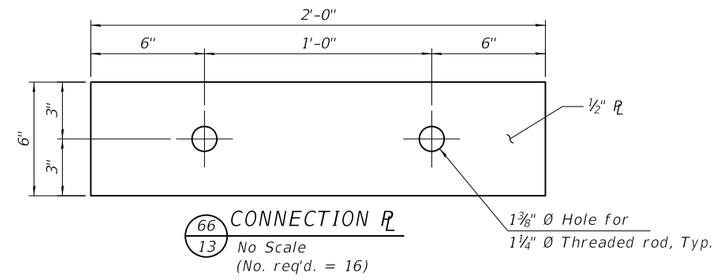

66/13 CONNECTION PL
No Scale
(No. req'd. = 16)

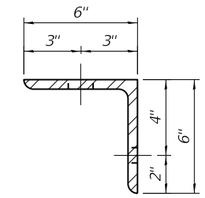

68/13 SECTION
No Scale

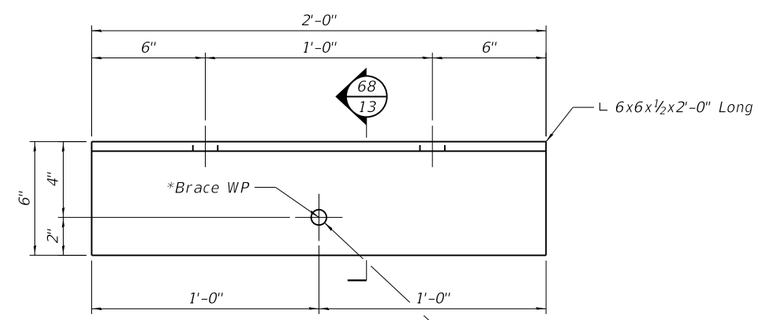

67/13 CONNECTION L
No Scale
(No. req'd. = 16)

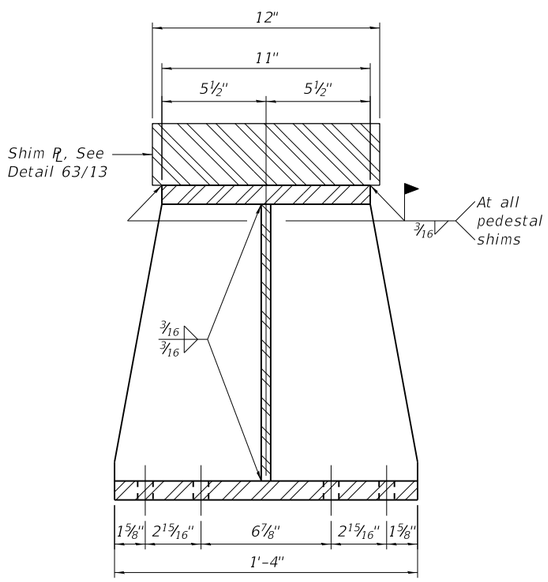

58/13 SECTION
No Scale

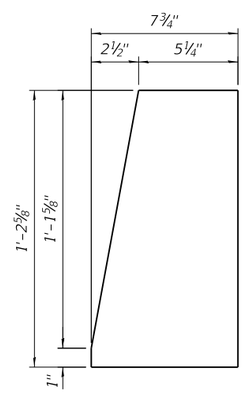

61/13 1" STIFFENER PL
No Scale
(No. req'd. = 96, 6 per assembly)

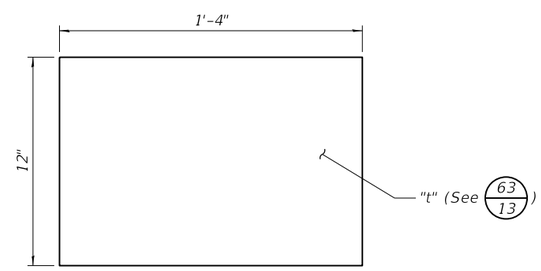

62/13 PEDESTAL SHIMS
No Scale
(No. req'd. = 16 at various sizes)

PIER	FRAME #	GIRDER # @ PEDESTAL	
		① or ④	② or ③
1	F1	2¼"	3½"
	F2	1¾"	3"
2	F3	4"	5⅛"
	F4	4⅝"	5⅞"

63/13 PEDESTAL SCHEDULE FOR "t"

BILL OF MATERIAL

ITEM	UNIT	QUANTITY
Furnishing Steel Piles HP 14x117	Foot	420
Driving Piles	Foot	420
Test Piles Steel HP 14x117	Each	2
Pile Shoes	Each	8
Temporary Support System, Location 1	L. Sum	1
Temporary Support System, Location 2	L. Sum	1

NOTES:

Installation and field welding of Pedestal Shim PL's shall be performed once the bridge has been jacked to the "Raised Position" at the respective pier.

*See Structural shee 9 of 67.

FILE = S:\PROJECTS\2017\1087J17_KCH\DESIGN\CAD_SHEETS\1087J17_Pier Support Details.dgn

WILLETT HOFMANN & ASSOCIATES INC
ENGINEERING ARCHITECTURE LAND SURVEYING
809 EAST 2ND STREET, DIXON, IL 61021-0367
T: 815-284-3381 DESIGN FIRM: #184-000918

DESIGNED - SM	REVISED -	
CHECKED - PLP	REVISED -	
DRAWN - FDL	REVISED -	
CHECKED - BKC	REVISED -	

LASALLE & KENDALL COUNTY
FAS 171(CH 3–MILLINGTON RD) OVER FOX RIVER
STATION 20+00

PHASE 2: TEMPORARY SUPPORT SYSTEM
STRUCTURE NO. 047-3000

STRUCTURAL SHEET NO. 13 OF 67 SHEETS

FAS RTE.	SECTION	COUNTY	TOTAL SHEETS	SHEET NO.
171	17-00802-00-BR	LASALLE	93	25
	17-00142-00-BR	KENDALL		

WHA# 1087J17 | ILLINOIS | FED. AID PROJECT WZPE(199) | CONTRACT NO. 87683

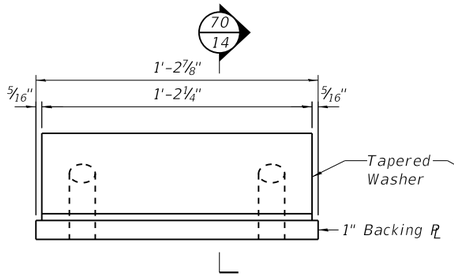

69/14 DETAIL - HP ANCHOR ASSEMBLY
No Scale

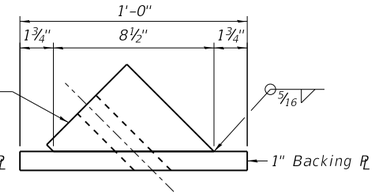

70/14 SECTION
No Scale

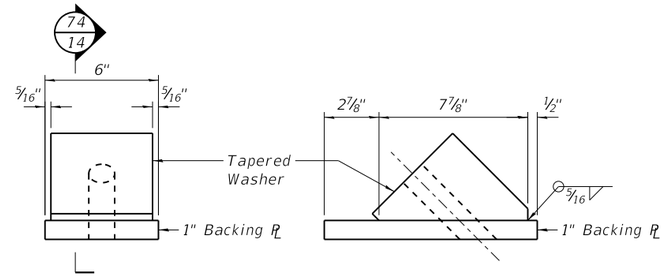

73/14 DETAIL - W36 ANCHOR ASSEMBLY
No Scale

74/14 SECTION
No Scale

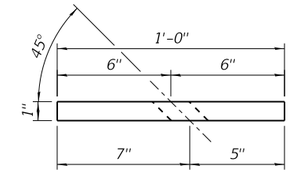

78/14 SECTION
No Scale

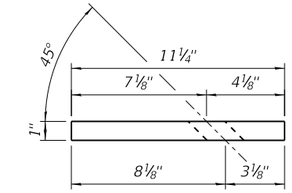

80/14 SECTION
No Scale

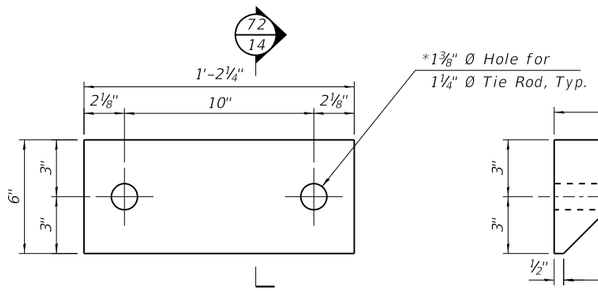

71/14 DETAIL - TAPERED WASHER
No Scale
(No. req'd. = 8)

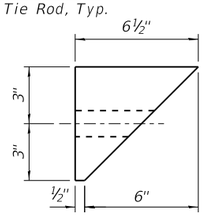

72/14 SECTION
No Scale

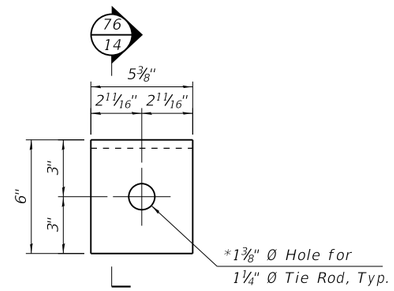

75/14 DETAIL - TAPERED WASHER
No Scale
(No. req'd. = 16)

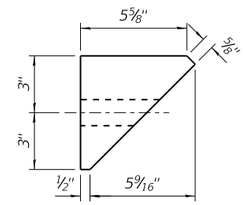

76/14 SECTION
No Scale

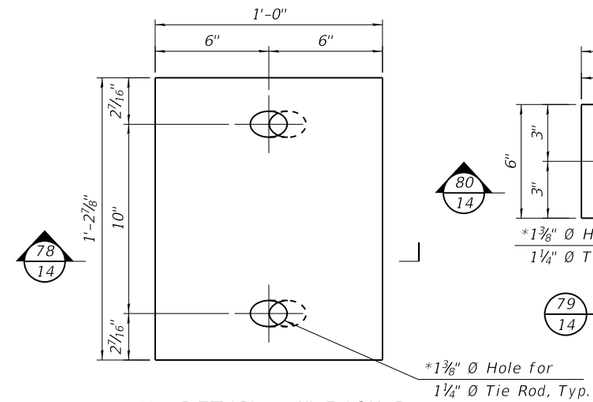

77/14 DETAIL - 1" BACK PL
No Scale
(No. req'd. = 24)

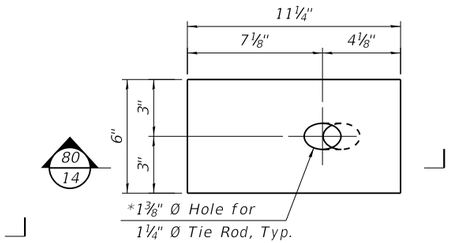

79/14 DETAIL - 1" BACK PL
No Scale
(No. req'd. = 16)

NOTE:

*Confirm Ø of hole is Ø + ⅛" of tied rod prior to shop drilling.

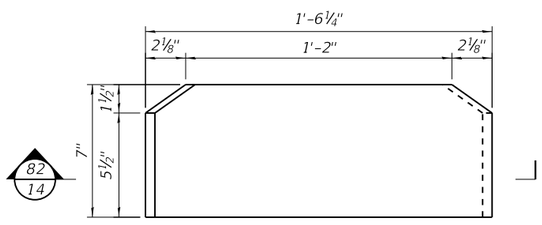

81/14 ½" STIFFENER PL
No Scale
(No. req'd. = 32)

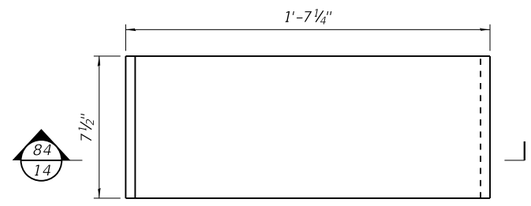

83/14 ½" STIFFENER PL
No Scale
(No. req'd. = 48)

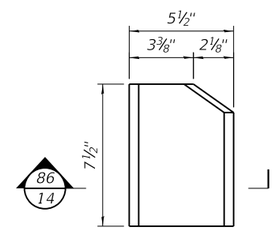

85/14 ½" STIFFENER PL
No Scale
(No. req'd. = 16)

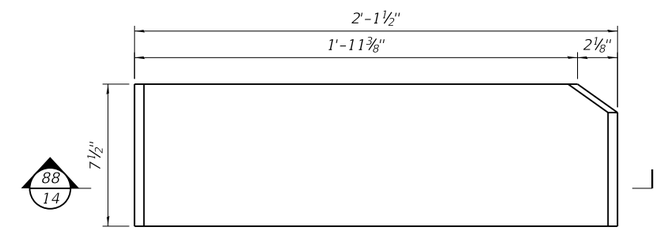

87/14 ½" STIFFENER PL
No Scale
(No. req'd. = 16)

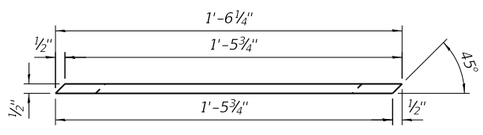

82/14 SECTION - ½" STIFFENER PL
No Scale

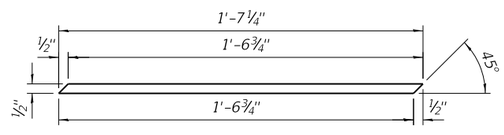

84/14 SECTION - ½" STIFFENER PL
No Scale

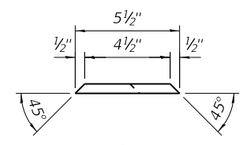

86/14 SECTION - ½" STIFFENER PL
No Scale

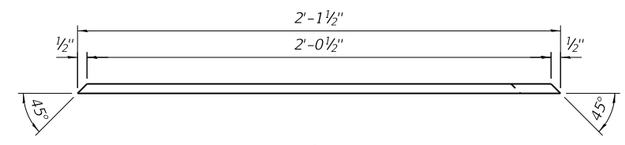

88/14 SECTION - ½" STIFFENER PL
No Scale

WILLETT HOFMANN & ASSOCIATES INC
ENGINEERING ARCHITECTURE LAND SURVEYING
809 EAST 2ND STREET, DIXON, IL 61021-0367
T: 815-284-3381 DESIGN FIRM: #184-000918

DESIGNED - BKC	REVISED -	LASALLE & KENDALL COUNTY FAS 171(CH 3–MILLINGTON RD) OVER FOX RIVER STATION 20+00	PHASE 2: TEMPORARY SUPPORT SYSTEM STRUCTURE NO. 047-3000
CHECKED - PLP	REVISED -		
DRAWN - FDL	REVISED -		
CHECKED - BKC	REVISED -		STRUCTURAL SHEET NO. 14 OF 67 SHEETS

FAS RTE.	SECTION	COUNTY	TOTAL SHEETS	SHEET NO.
171	17-00802-00-BR	LASALLE	93	26
	17-00142-00-BR	KENDALL		

WHA* 1087J17 ILLINOIS FED. AID PROJECT WZPE(199) CONTRACT NO. 87683

FILE = S:\PROJECTS\2017\1087J17_KCH\DESIGN\CAD_SHEETS\1087J17_Pier Support Details.dgn

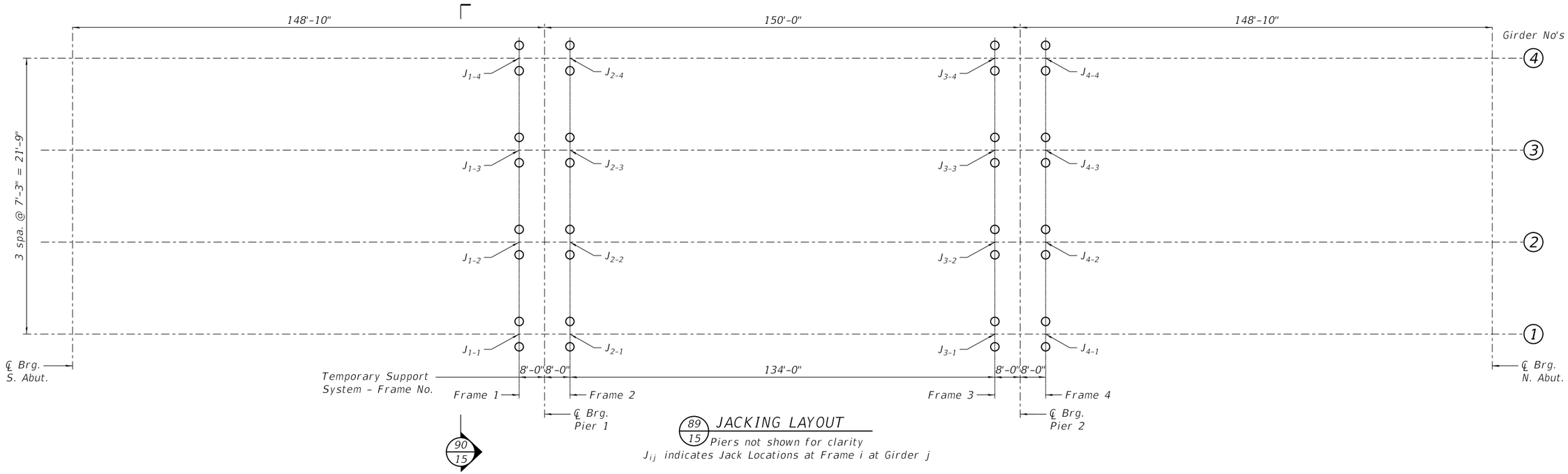

89/15 JACKING LAYOUT

Piers not shown for clarity

J_{ij} indicates Jack Locations at Frame i at Girder j

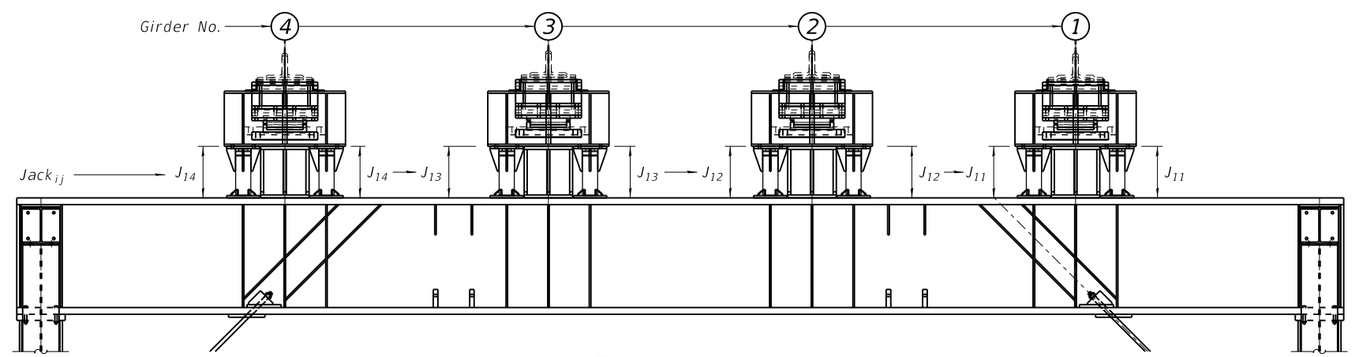

90/15 SECTION

Looking North

Frame 1 shown, Frames 2,3,4 similar

Step	Start Elevation*				Required Jack Load at Frame "F"																End Elevation*			
	Pier 1		Pier 2		F=1				F=2				F=3				F=4				Pier 1		Pier 2	
	Girder "G"		Girder "G"		Girder "G"				Girder "G"				Girder "G"				Girder "G"				Girder "G"		Girder "G"	
	G=1	G=4	G=1	G=4	G=1	G=2	G=3	G=4	G=1	G=2	G=3	G=4	G=1	G=2	G=3	G=4	G=1	G=2	G=3	G=4	**G=1	**G=4	**G=1	**G=4
1: Pier 2 "Deflected Position" (J_{F-G}, Kips per Jack)	558.10	558.13	557.90	558.09	—	—	—	—	—	—	—	—	J_{3-1} = ***	J_{3-2} = ***	J_{3-3} = ***	J_{3-4} = ***	J_{4-1} = ***	J_{4-2} = ***	J_{4-3} = ***	J_{4-4} = ***	558.10	558.13	558.18	558.18
2: Pier 2 "Raised Position" (J_{F-G}, Kips per Jack)	558.10	558.13	558.18	558.18	—	—	—	—	—	—	—	—	J_{3-1} = 34.95	J_{3-2} = 41.05	J_{3-3} = 41.05	J_{3-4} = 34.95	J_{4-1} = 65.3	J_{4-2} = 70.05	J_{4-3} = 70.05	J_{4-4} = 65.3	558.10	558.13	558.20	558.20
3: Pier 1 "Raised Position" (J_{F-G}, Kips per Jack)	558.10	558.13	558.20	558.20	J_{1-1} = 63.6	J_{1-2} = 68.4	J_{1-3} = 68.4	J_{1-4} = 63.6	J_{2-1} = 38.3	J_{2-2} = 44.5	J_{2-3} = 44.5	J_{2-4} = 38.3	—	—	—	—	—	—	—	—	558.20	558.20	558.20	558.20
4: Pier 1 & 2 "Design Position" (J_{F-G}, Kips per Jack)	558.20	558.20	558.20	558.20	J_{1-1} = 63.6	J_{1-2} = 68.4	J_{1-3} = 68.4	J_{1-4} = 63.6	J_{2-1} = 38.3	J_{2-2} = 44.5	J_{2-3} = 44.5	J_{2-4} = 38.3	J_{1-1} = 38.3	J_{1-2} = 44.5	J_{1-3} = 44.5	J_{1-4} = 38.3	J_{2-1} = 63.6	J_{2-2} = 68.4	J_{2-3} = 68.4	J_{2-4} = 63.6	558.18	558.18	558.18	558.18

NOTES:

See Special Provisions for Jack and Remove Existing Bearings

— Indicates no Jacking Required or Indicates Girders are supported by Temporary Pedestals.

* Contractor shall verify this elevation at the fascia girders at ℄ Bearing of the Piers.

** Contractor shall verify that Girder 2 and Girder 3 are 0.07' higher than Girder 1 and Girder 4 respectively.

*** Increase jack force from 0.0 kips until Girder 1 and Girder 4 are level.

WILLETT HOFMANN & ASSOCIATES INC
ENGINEERING ARCHITECTURE LAND SURVEYING
809 EAST 2ND STREET, DIXON, IL 61021-0367
T: 815-284-3381 DESIGN FIRM: #184-000918

DESIGNED - PLP	REVISED -	LASALLE & KENDALL COUNTY FAS 171(CH 3–MILLINGTON RD) OVER FOX RIVER STATION 20+00	PHASE 2 & 3: INITIAL & FINAL JACKING STRUCTURE NO. 047-3000
CHECKED - SM	REVISED -		
DRAWN - RDA	REVISED -		
CHECKED - BKC	REVISED -		STRUCTURAL SHEET NO. 15 OF 67 SHEETS

FAS RTE.	SECTION	COUNTY	TOTAL SHEETS	SHEET NO.
171	17-00802-00-BR	LASALLE	93	27
	17-00142-00-BR	KENDALL		

WHA# 1087J17 ILLINOIS FED. AID PROJECT WZPE(199) CONTRACT NO. 87683

FILE = S:\PROJECTS\2017\1087J17_KCH\DESIGN\CAD_SHEETS\1087J17_Phase 2 and 3 Initial and Final Jacking.dgn

NOTES:

* Measurements based on May 2017 field survey. Contractor shall field verify due to potential pier settlement since May 2017.

** Indicates elevations and offsets that Contractor shall adhere to accommodate proposed Concrete Structures.

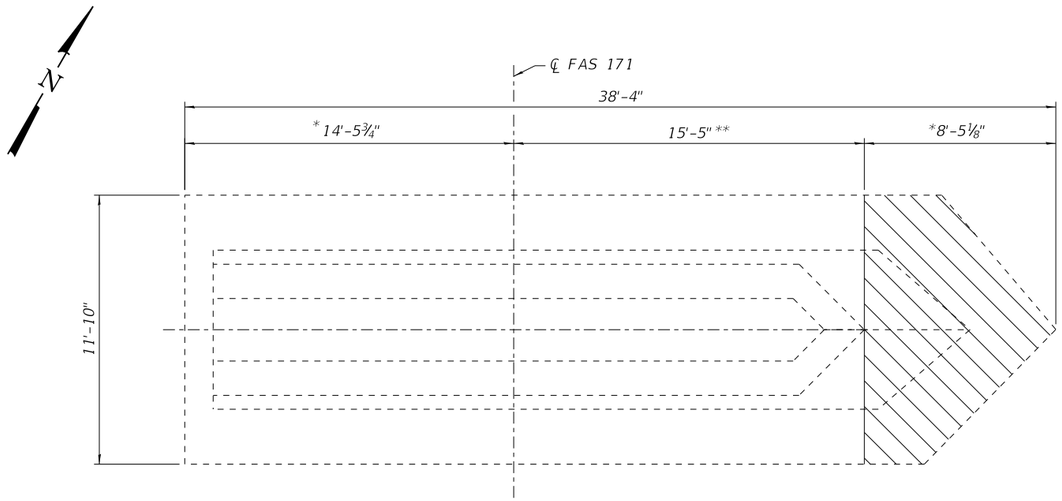

92/16 SECTION
No Scale

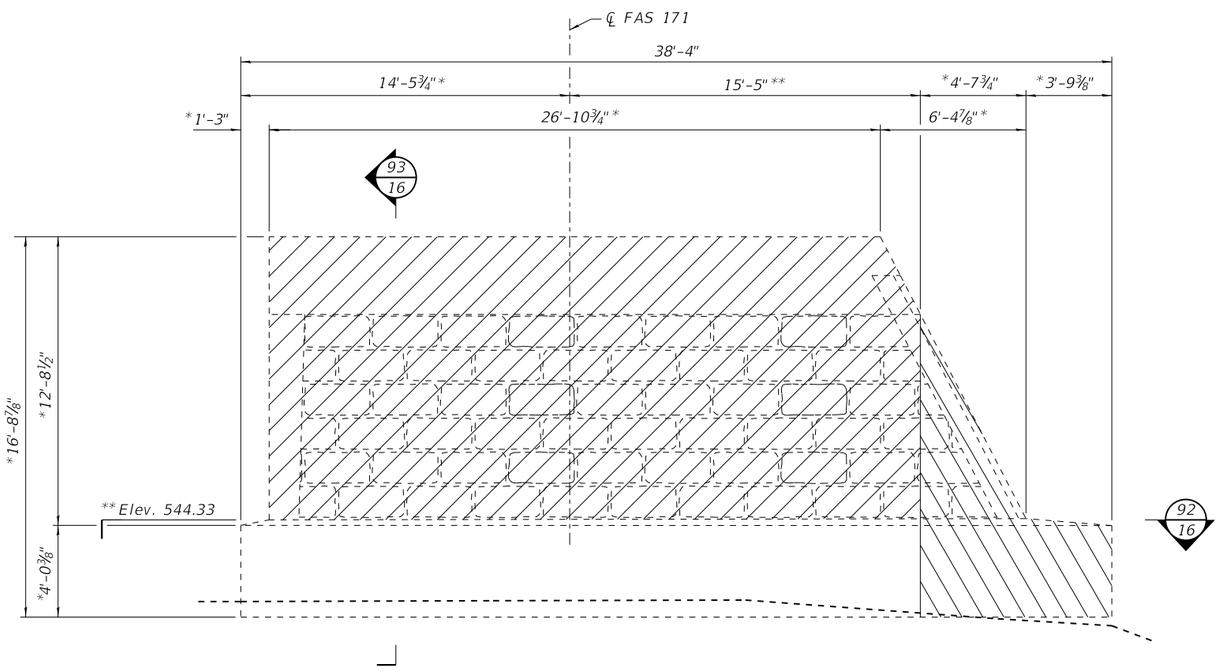

91/16 CONCRETE REMOVAL ELEVATION VIEW - PIER 1
No Scale

LEGEND:

= Full-Depth Concrete Removal of Pier 1

= Partial Concrete Removal of Pier 1

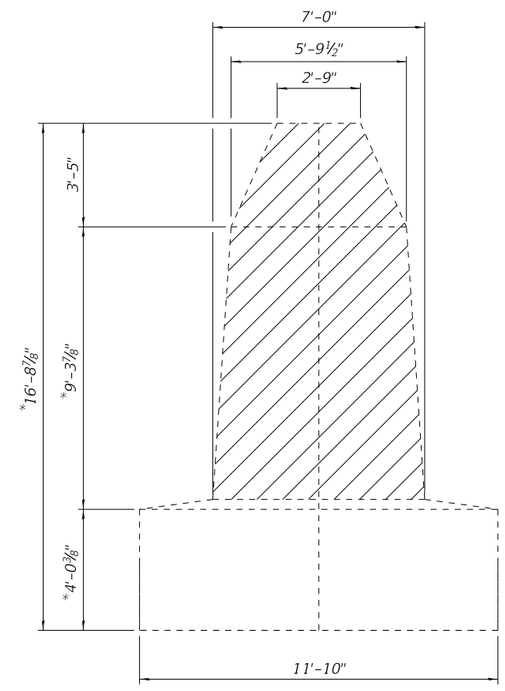

93/16 SECTION
No Scale

BILL OF MATERIAL

ITEM	UNIT	QUANTITY
Concrete Removal	Cu. Yd.	92.2

FILE = S:\PROJECTS\2017\1087J17_KCH\DESIGN\CAD_SHEETS\1087J17_Pier 1 Concrete Removal.dgn

WILLETT HOFMANN & ASSOCIATES INC
ENGINEERING ARCHITECTURE LAND SURVEYING
809 EAST 2ND STREET, DIXON, IL 61021-0367
T: 815-284-3381 DESIGN FIRM: #184-000918

DESIGNED - SM	REVISED -	LASALLE & KENDALL COUNTY FAS 171(CH 3–MILLINGTON RD) OVER FOX RIVER STATION 20+00	PHASE 2: PIER 1 CONCRETE REMOVAL STRUCTURE NO. 047-3000
CHECKED - PLP	REVISED -		
DRAWN - RDA	REVISED -		
CHECKED - BKC	REVISED -		STRUCTURAL SHEET NO. 16 OF 67 SHEETS

FAS RTE.	SECTION	COUNTY	TOTAL SHEETS	SHEET NO.
171	17-00802-00-BR	LASALLE	93	28
	17-00142-00-BR	KENDALL		

WHA# 1087J17 | ILLINOIS | FED. AID PROJECT WZPE(199) | CONTRACT NO. 87683

NOTES:

* Measurements based on May 2017 field survey. Contractor shall field verify due to potential pier settlement since May 2017.

** Indicates elevations and offsets that Contractor shall adhere to accommodate proposed Concrete Structures.

*** Cost to be included with Concrete Removal. See Special Provisions.

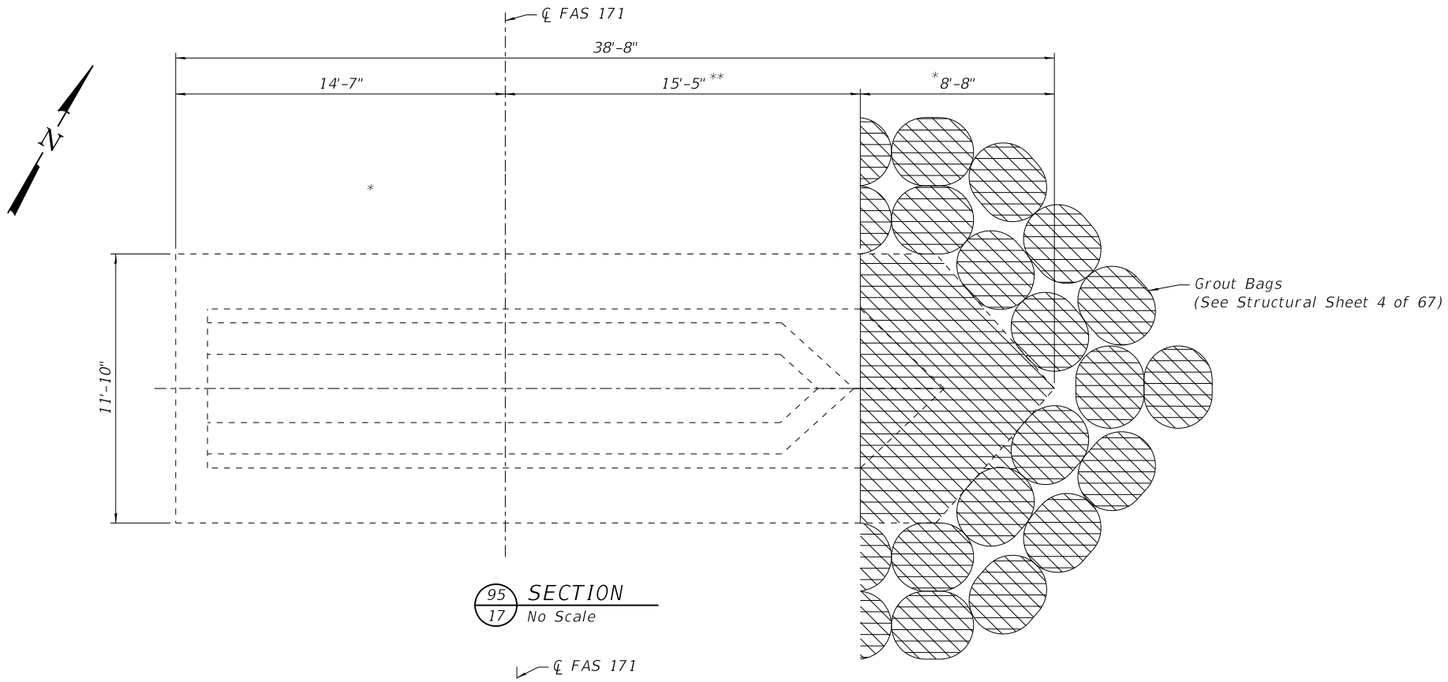

95/17 SECTION
No Scale

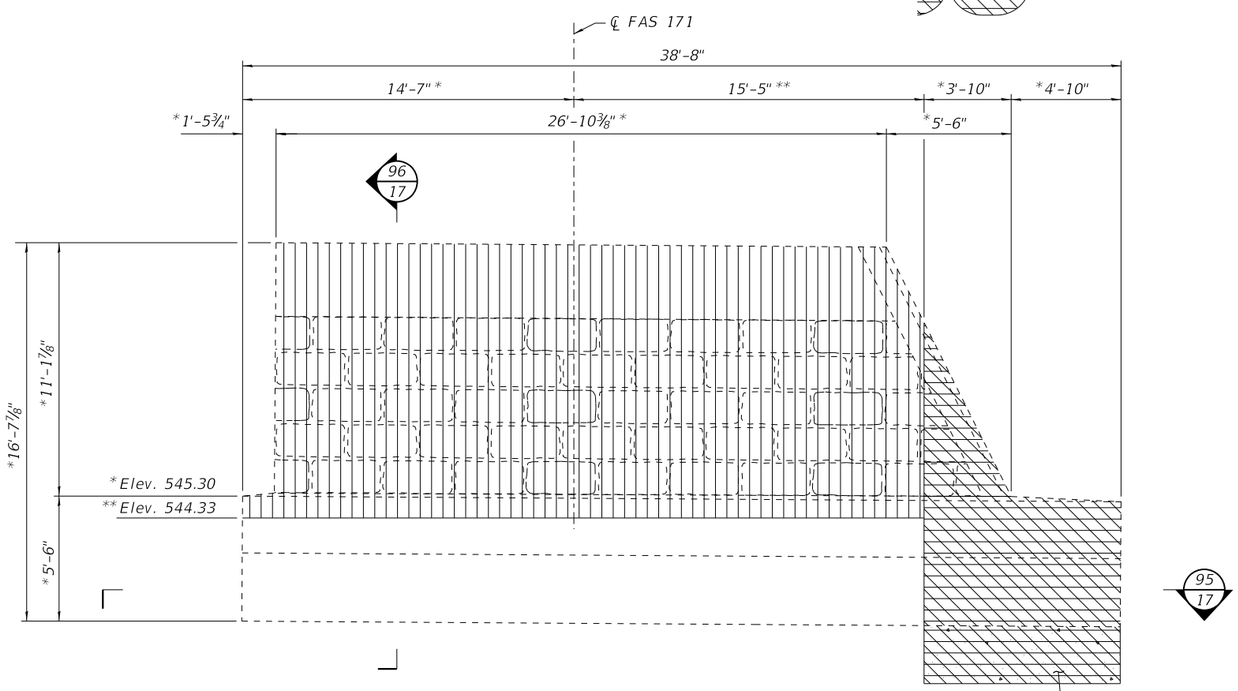

94/17 CONCRETE REMOVAL ELEVATION VIEW - PIER 2
No Scale
Grout bags not shown

LEGEND:

= Full-Depth Concrete Removal of Pier 2

= Partial Concrete Removal of Pier 2

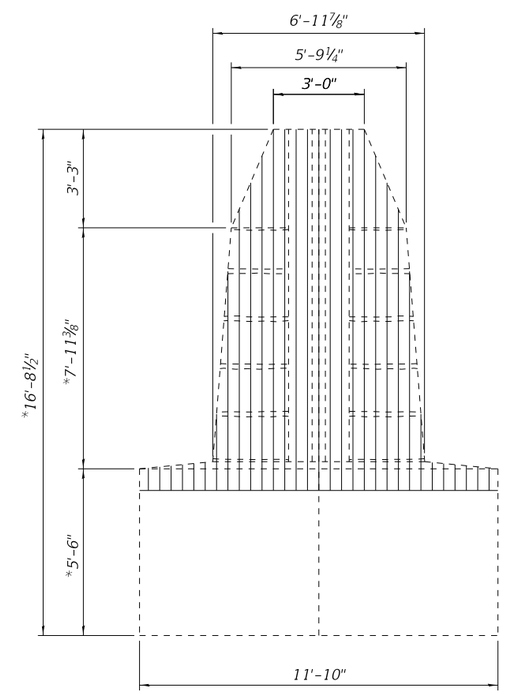

96/17 SECTION
No Scale
Grout bags not shown

BILL OF MATERIAL

ITEM	UNIT	QUANTITY
Concrete Removal	Cu. Yd.	102.7

WILLETT HOFMANN & ASSOCIATES INC
ENGINEERING ARCHITECTURE LAND SURVEYING
809 EAST 2ND STREET, DIXON, IL 61021-0367
T: 815-284-3381 DESIGN FIRM: #184-000918

DESIGNED - SM	REVISED -		
CHECKED - PLP	REVISED -		
DRAWN - RDA	REVISED -		
CHECKED - BKC	REVISED -		

LASALLE & KENDALL COUNTY
FAS 171(CH 3-MILLINGTON RD) OVER FOX RIVER
STATION 20+00

PHASE 2: PIER 2 CONCRETE REMOVAL
STRUCTURE NO. 047-3000

STRUCTURAL SHEET NO. 17 OF 67 SHEETS

FAS RTE.	SECTION	COUNTY	TOTAL SHEETS	SHEET NO.
171	17-00802-00-BR	LASALLE	93	29
	17-00142-00-BR	KENDALL		

WHA# 1087J17 ILLINOIS FED. AID PROJECT WZPE(199) CONTRACT NO. 87683

FILE = S:\PROJECTS\2017\1087J17.KCH\DESIGN\CAD.SHEETS\1087J17.Pier 2 Concrete Removal.dgn

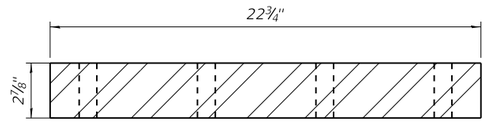

PROFILE VIEW
PIER #1 FILLER PLATE*

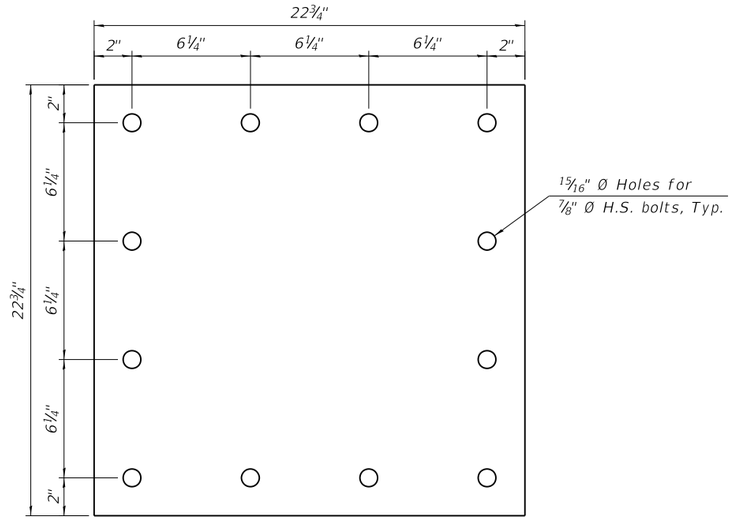

PLAN VIEW
PIER #1 FILLER PLATE*

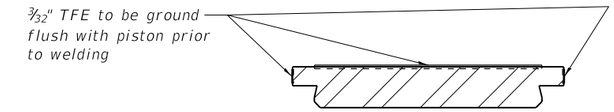

PROFILE VIEW
EXISTING PISTON PLATE

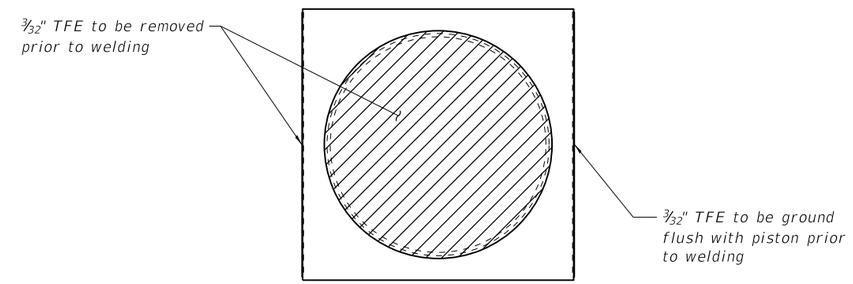

TOP VIEW
EXISTING PISTON PLATE

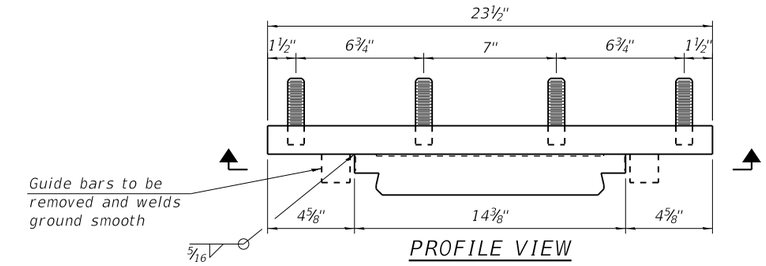

PROFILE VIEW
MODIFIED TOP & PISTON PLATES

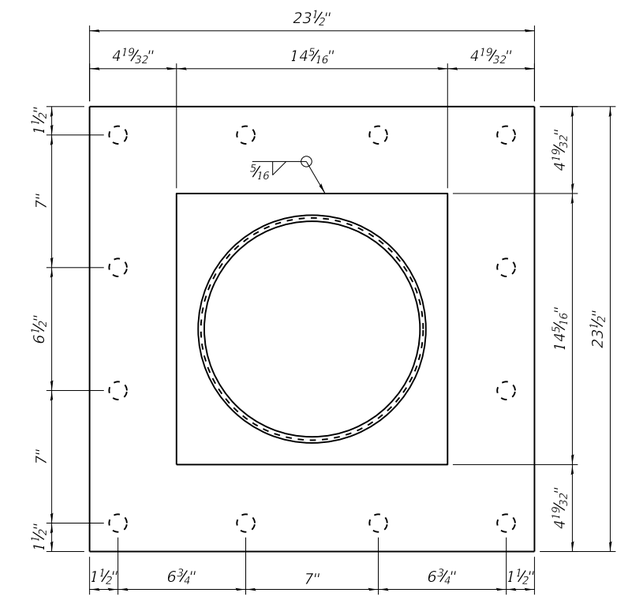

BOTTOM VIEW
MODIFIED TOP & PISTON PLATES

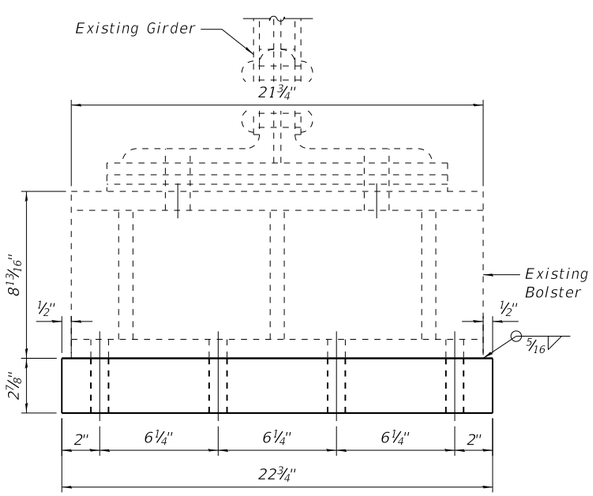

PIER #1 FILLER PLATE DETAILS

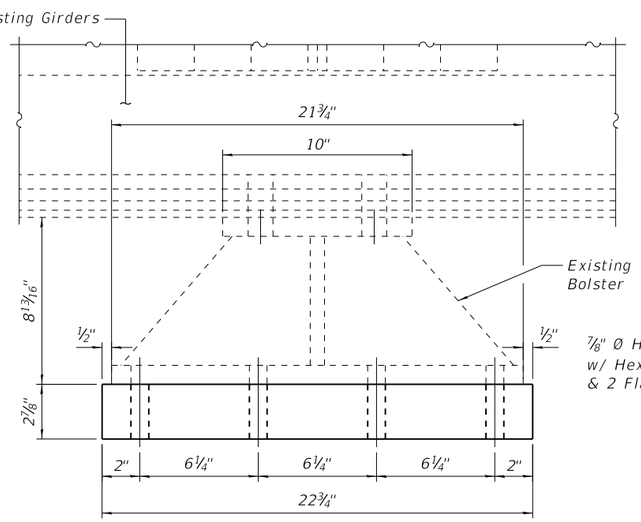

PIER #1 FILLER PLATE DETAILS

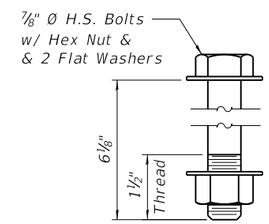

H.S. BOLT DETAIL
No Scale
*(No. req'd. = 48)
Bolts to be ASTM A325 Galv.

PIER #1 BEARING MODIFICATIONS

PIER #2 BEARING MODIFICATIONS

NOTE - PIERS #1 & #2

See Special Provisions for all requirements of bearing modifications.

Anchor bolts shall be ASTM F1554 all-thread (or an Engineer-approved alternate material) of the grade(s) and diameter(s) specified. ASTM A307 Grade C anchor bolts may be used in lieu of ASTM F1554 Grade 36 (fy=36ksi). The corresponding specified grade of AASHTO M314 anchor bolts may be used in lieu of ASTM F1554.

Anchor bolts at fixed bearings may be either cast in place or installed in holes drilled after the supported member is in place.

Drilled and set anchor bolts shall be installed according to Article 521.06 of the Standard Specifications.

(2) 1⅛" adjusting shims shall be provided for each bearing in addition to all other ℄'s required and placed as shown on bearing details.

BILL OF MATERIAL

ITEM	UNIT	QUANTITY
Jack and Remove Existing Bearings	Each	8
Anchor Bolts, 1¼"	Each	32

*Cost included with Jack and Remove Existing Bearings

WILLETT HOFMANN & ASSOCIATES INC
ENGINEERING ARCHITECTURE LAND SURVEYING
809 EAST 2ND STREET, DIXON, IL 61021-0367
T: 815-284-3381 DESIGN FIRM: #184-000918

DESIGNED	- BKC	REVISED	-
CHECKED	- PLP	REVISED	-
DRAWN	- FDL	REVISED	-
CHECKED	- BKC	REVISED	-

LASALLE & KENDALL COUNTY
FAS 171(CH 3-MILLINGTON RD) OVER FOX RIVER
STATION 20+00

PHASE 3: PIER #1 & PIER # 2 BEARING MODIFICATIONS
STRUCTURE NO. 047-3000

STRUCTURAL SHEET NO. 18 OF 67 SHEETS

FAS RTE.	SECTION	COUNTY	TOTAL SHEETS	SHEET NO.
171	17-00802-00-BR	LASALLE	93	30
	17-00142-00-BR	KENDALL		

WHA# 1087J17 ILLINOIS FED. AID PROJECT WZPE(199) CONTRACT NO. 87683

FILE = S:\PROJECTS\2017\1087J17_KCH\DESIGN\CAD_SHEETS\1087J17_Bearing Details.dgn

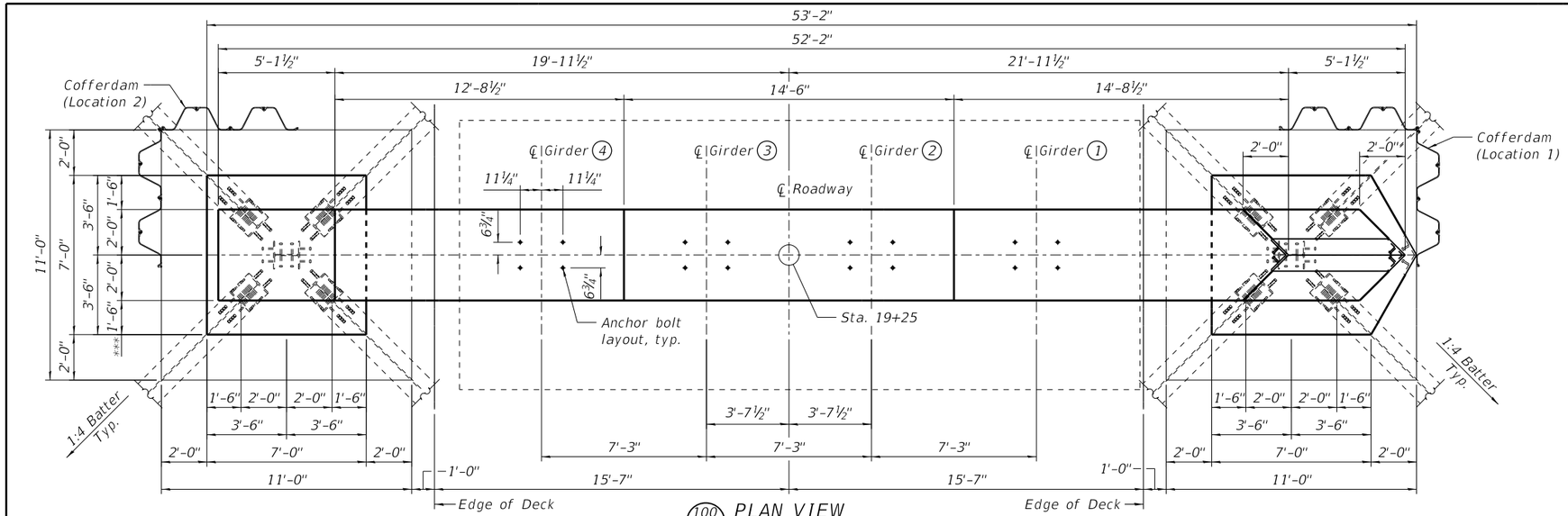

100/19 PLAN VIEW
No Scale

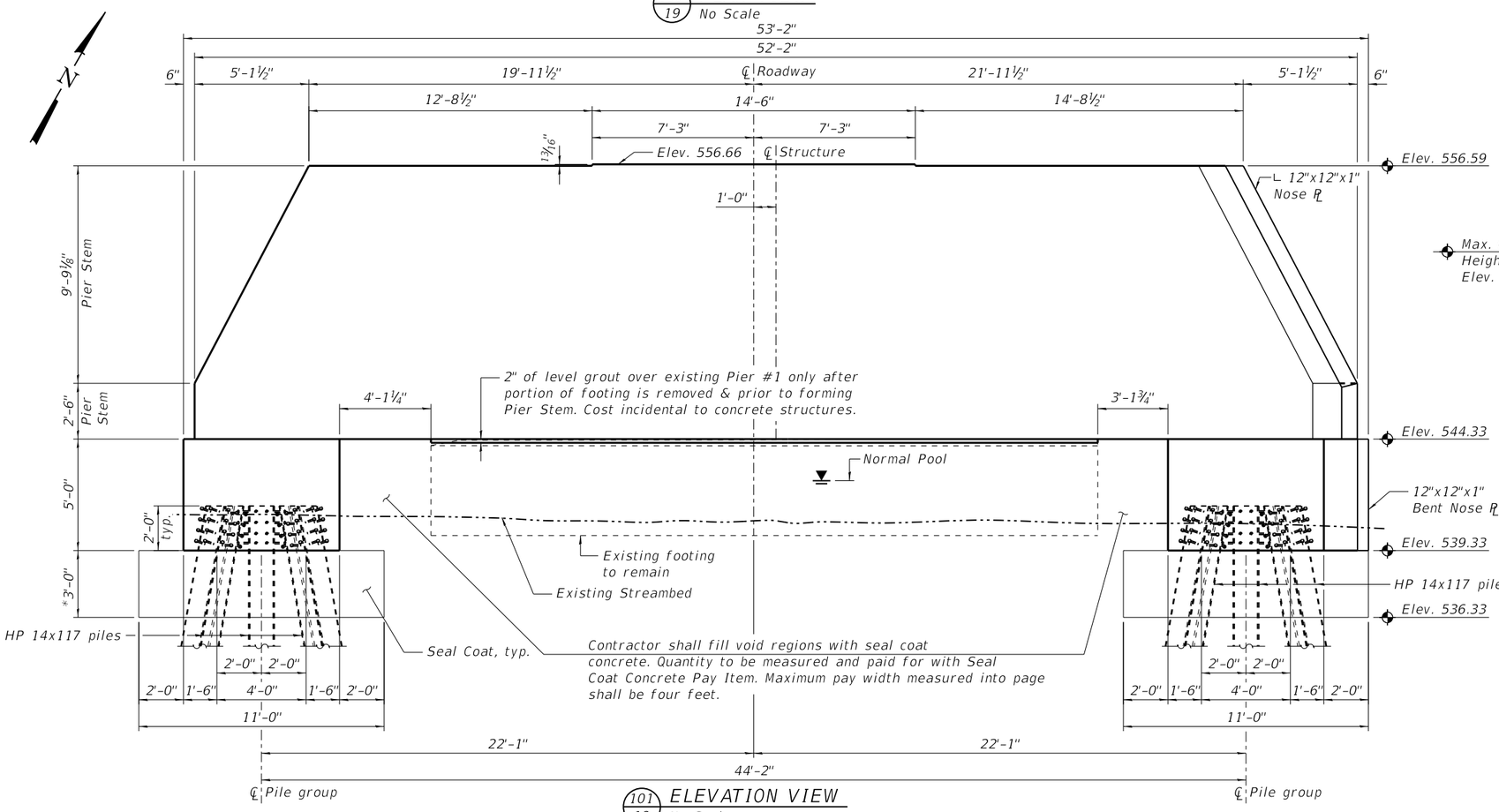

101/19 ELEVATION VIEW
No Scale

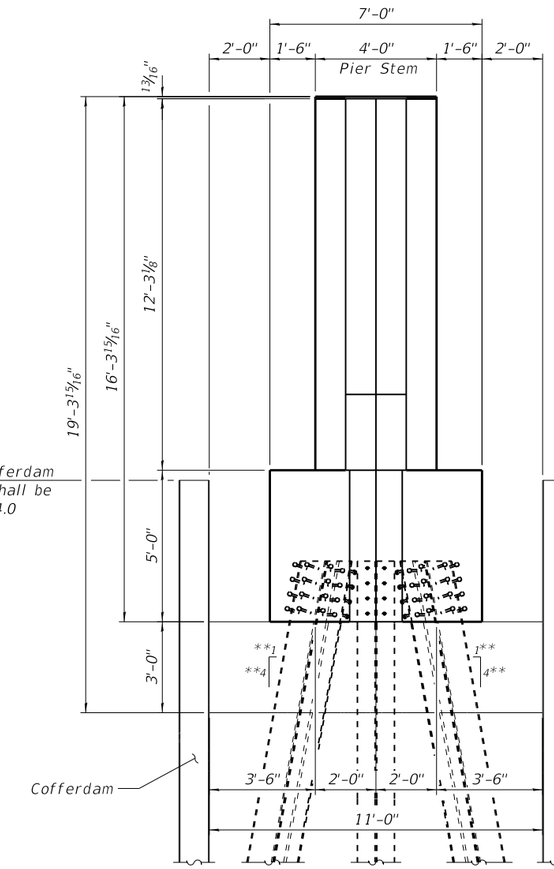

102/19 EAST END VIEW
No Scale
See plan View for Batter

NOTES

See Structural Sheet 22 of 67 for Bill of material.

Plan View pile dimensions are referenced from bottom of pile cap at Elev. 539.33, typ..

Details 97 - 99 are reserved.

*Minimum Seal Coat thickness.

**See Plan View for correct orientation

FILE = S:\PROJECTS\2017\1087J17_KCH\DESIGN\CAD_SHEETS\1087J17_Pier 1 Details.dgn

WILLETT HOFMANN & ASSOCIATES INC
ENGINEERING ARCHITECTURE LAND SURVEYING
809 EAST 2ND STREET, DIXON, IL 61021-0367
T: 815-284-3381 DESIGN FIRM: #184-000918

DESIGNED - BKC	REVISED -		
CHECKED - BKC/SM	REVISED -		
DRAWN - FDL	REVISED -		
CHECKED - BKC	REVISED -		

LASALLE & KENDALL COUNTY
FAS 171(CH 3–MILLINGTON RD) OVER FOX RIVER
STATION 20+00

PHASE 3: PIER # 1 - PLAN AND ELEVATION
STRUCTURE NO. 047-3000

STRUCTURAL SHEET NO. 19 OF 67 SHEETS

FAS RTE.	SECTION	COUNTY	TOTAL SHEETS	SHEET NO.
171	17-00802-00-BR	LASALLE	93	31
	17-00142-00-BR	KENDALL		

WHA# 1087J17 | ILLINOIS | FED. AID PROJECT WZPE(199) | CONTRACT NO. 87683

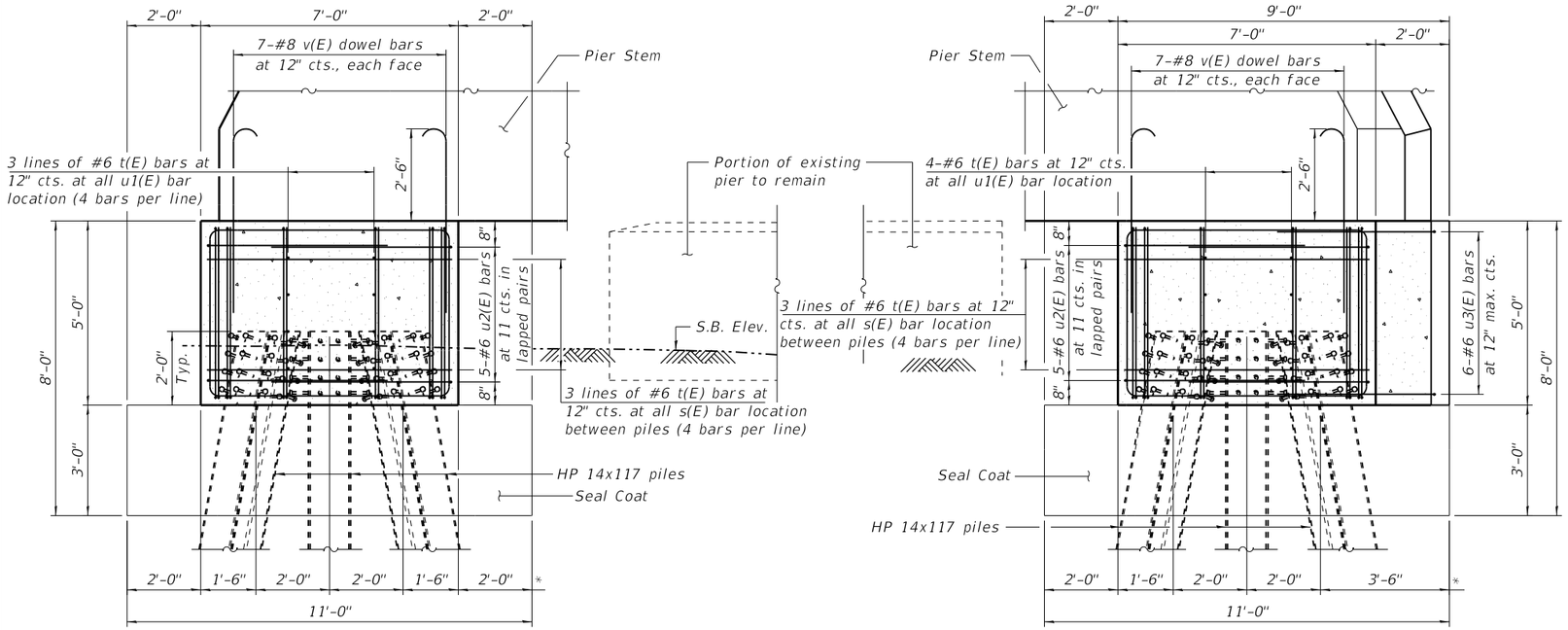

103/20 ELEVATION VIEWS
No Scale

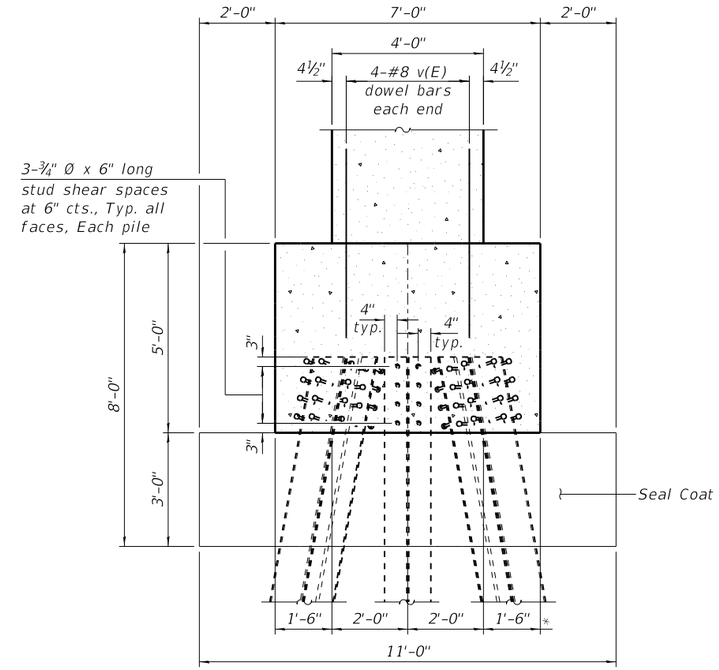

105/20 DOWNSTREAM END - ELEVATION SECTION
No Scale

NOTE:

Stud shear connectors sall be ¾" Ø X 6" Granular or solid flux filled headed studs, automatically end welded to flange. (320 Required)

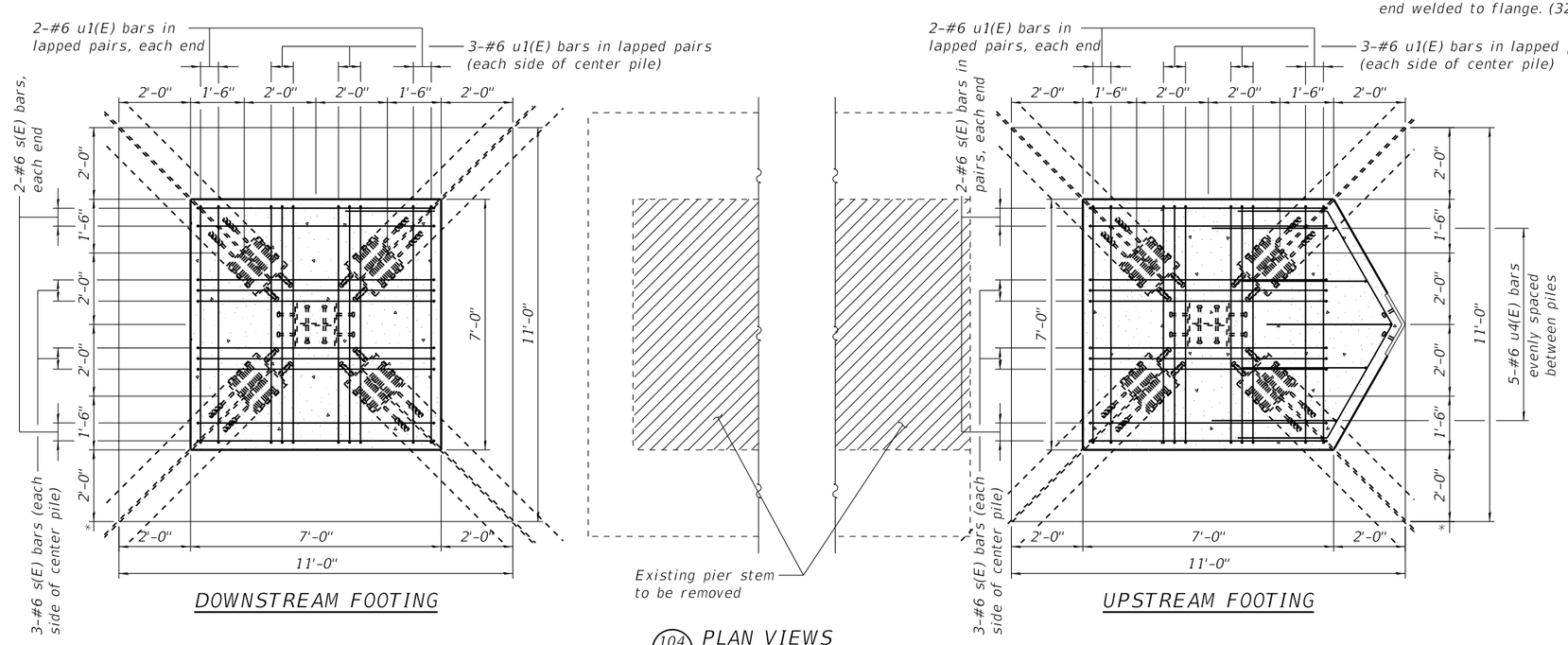

104/20 PLAN VIEWS
No Scale

*Dimensions at Elev. 539.33, typ.

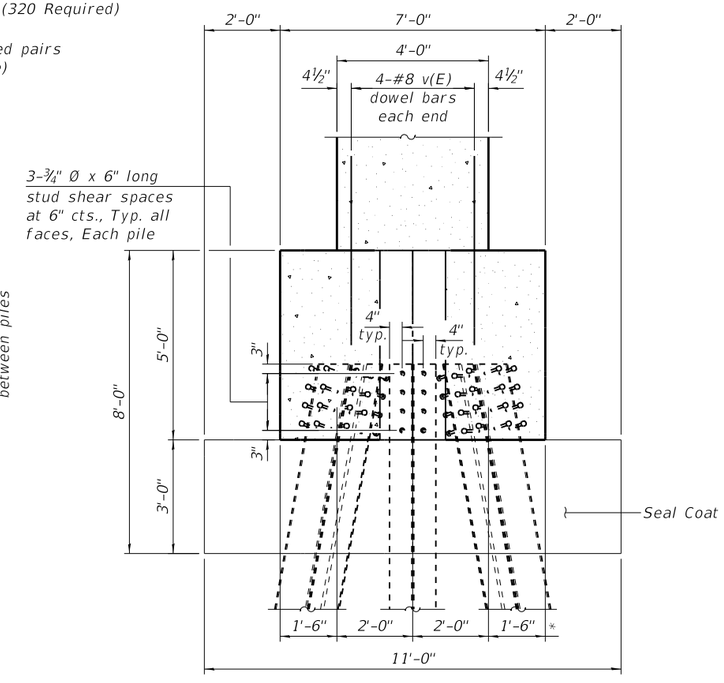

106/20 UPSTREAM END - ELEVATION SECTION
No Scale

FILE = S:\PROJECTS\2017\1087J17_KCH\DESIGN\CAD_SHEETS\1087J17_Pier 1 Details.dgn

WILLETT HOFMANN & ASSOCIATES INC
ENGINEERING ARCHITECTURE LAND SURVEYING
809 EAST 2ND STREET, DIXON, IL 61021-0367
T: 815-284-3381 DESIGN FIRM: #184-000918

DESIGNED	-	BKC	REVISED -
CHECKED	-	BKC/SM	REVISED -
DRAWN	-	FDL	REVISED -
CHECKED	-	BKC	REVISED -

LASALLE & KENDALL COUNTY
FAS 171(CH 3-MILLINGTON RD) OVER FOX RIVER
STATION 20+00

PHASE 3: PIER # 1 - FOOTING DETAILS
STRUCTURE NO. 047-3000

STRUCTURAL SHEET NO. 20 OF 67 SHEETS

FAS RTE.	SECTION	COUNTY	TOTAL SHEETS	SHEET NO.
171	17-00802-00-BR	LASALLE	93	32
	17-00142-00-BR	KENDALL		

WHA# 1087J17 | ILLINOIS | FED. AID PROJECT WZPE(199) | CONTRACT NO. 87683

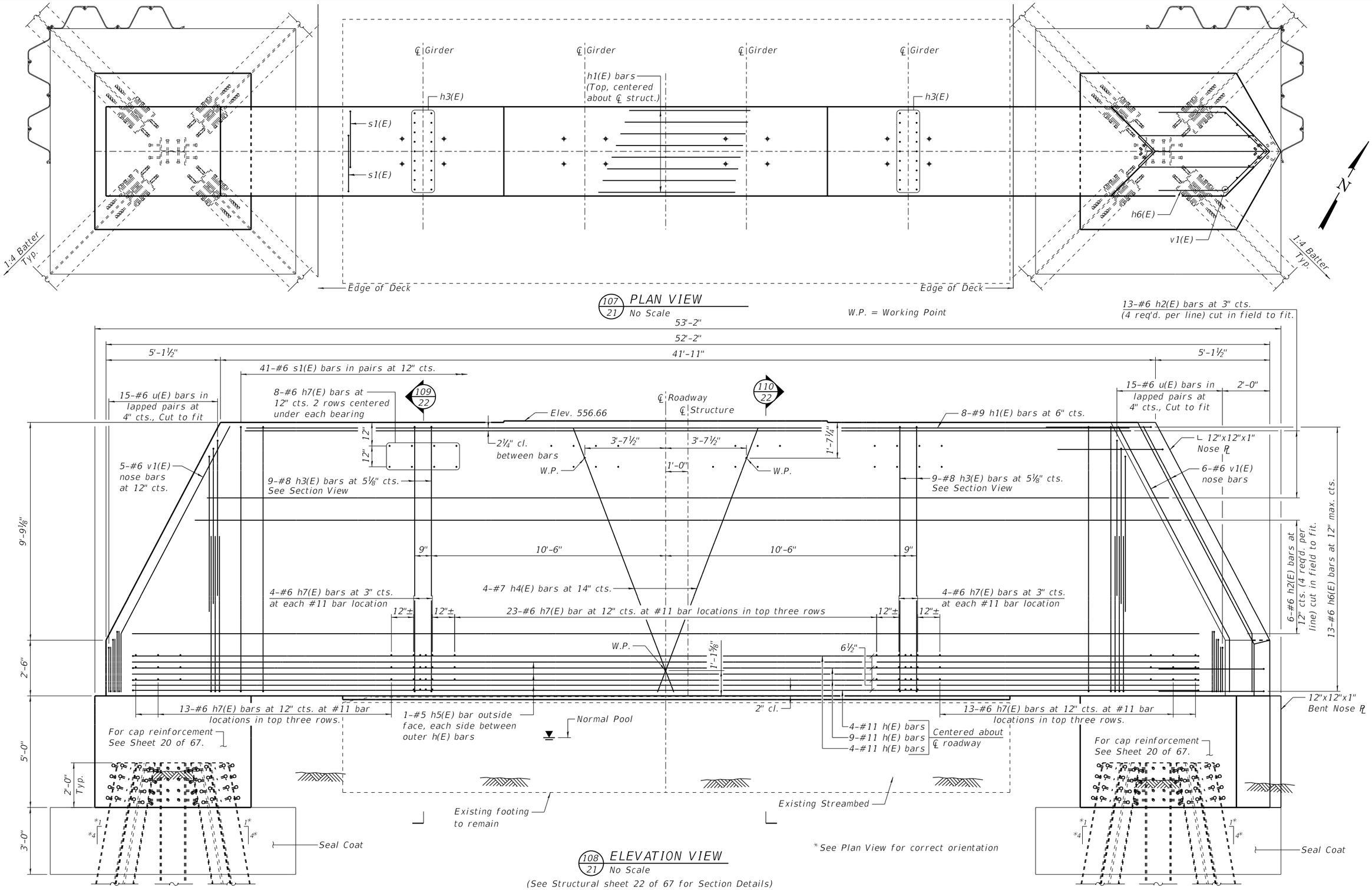

FILE = S:\PROJECTS\2017\1087J17_KCH\DESIGN\CAD_SHEETS\1087J17_Pier 1 Details.dgn

WILLETT HOFMANN & ASSOCIATES, INC
ENGINEERING ARCHITECTURE LAND SURVEYING
809 EAST 2ND STREET, DIXON, IL 61021-0367
T: 815-284-3381 DESIGN FIRM: #184-000918

DESIGNED	- BKC	REVISED	-
CHECKED	- BKC/SM	REVISED	-
DRAWN	- FDL	REVISED	-
CHECKED	- BKC	REVISED	-

LASALLE & KENDALL COUNTY
FAS 171(CH 3–MILLINGTON RD) OVER FOX RIVER
STATION 20+00

PHASE 3: PIER # 1 - PIER STEM REINFORCEMENT DETAILS
STRUCTURE NO. 047-3000

STRUCTURAL SHEET NO. 21 OF 67 SHEETS

FAS RTE.	SECTION	COUNTY	TOTAL SHEETS	SHEET NO.
171	17-00802-00-BR	LASALLE	93	33
	17-00142-00-BR	KENDALL		

WHA# 1087J17 | ILLINOIS | FED. AID PROJECT WZPE(199) | CONTRACT NO. 87683

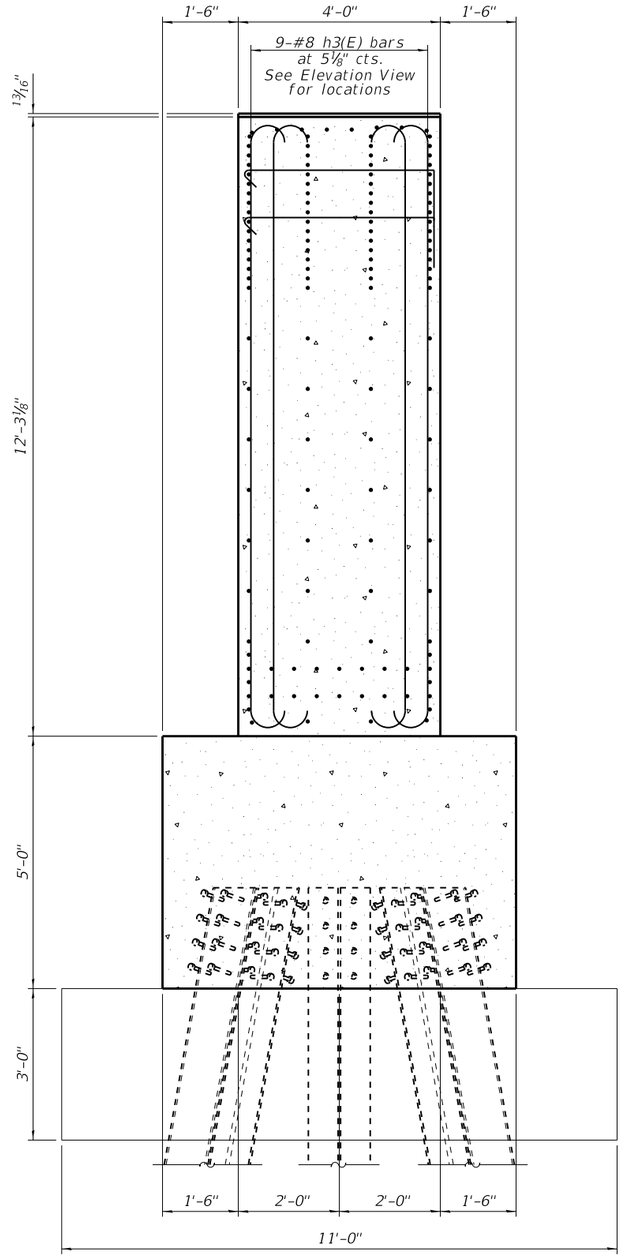

109 / 22 SECTION
No Scale
(Showing placement of h3(E) bars only)

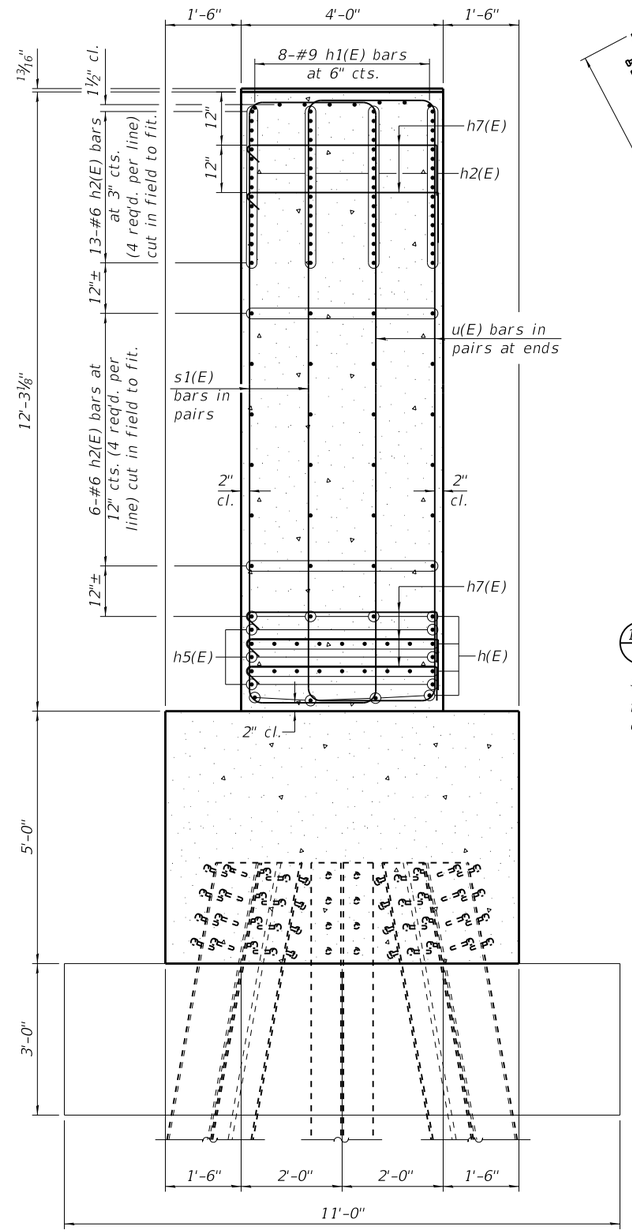

110 / 22 SECTION
No Scale

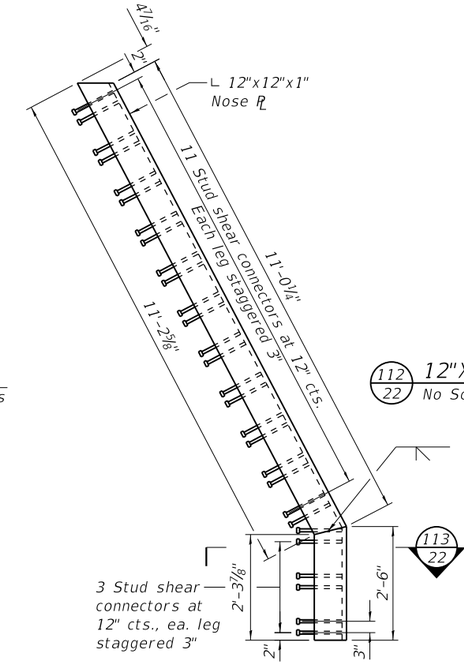

111 / 22 L 12"X12"X1" NOSE PLATE
No Scale

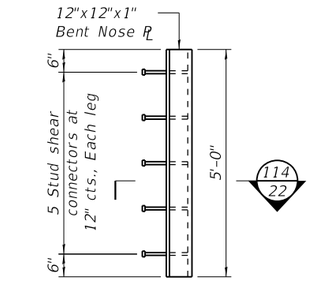

112 / 22 12"X12"X1" BENT NOSE PLATE
No Scale

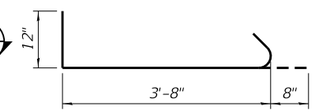

BAR h7(E)

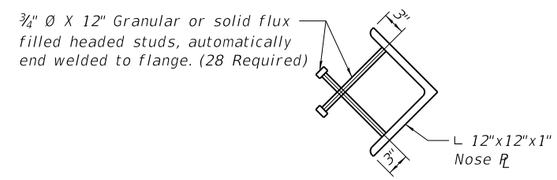

113 / 22 SECTION
No Scale

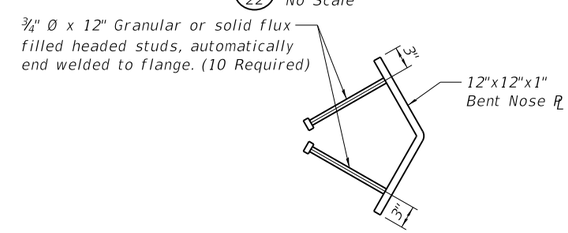

114 / 22 SECTION
No Scale

PIER #1
BILL OF MATERIAL

Bar	No.	Size	Length	Shape
h(E)	26	#11	53'-0"	
h1(E)	8	#9	39'-7"	
h2(E)	76	#6	49'-10"	
h3(E)	36	#8	13'-9"	
h4(E)	8	#7	12'-8"	
h5(E)	6	#5	49'-10"	
h6(E)	13	#6	11'-2"	
h7(E)	211	#6	5'-4"	
s(E)	20	#6	24'-0"	
s1(E)	82	#6	30'-0"	
t(E)	48	#6	6'-8"	
u(E)	120	#6	16'-5"	
u1(E)	40	#6	16'-0"	
u2(E)	20	#6	16'-6"	
u3(E)	6	#6	12'-6"	
u4(E)	5	#6	11'-8"	
v(E)	44	#8	8'-1"	
v1(E)	11	#6	18'-3"	
Cofferdam Excavation			Cu. Yd.	36
Cofferdam Type 2 (Location 1)			Each	1
Cofferdam Type 2 (Location 2)			Each	1
Concrete Structures			Cu. Yd.	107
Seal Coat Concrete			Cu. Yd.	31.1
Furnishing & Erecting Structural Steel			Pound	1,456
Stud Shear Connectors			Each	358
Reinforcement Bars, Epoxy Coated			Pound	28,600
Furnishing Steel Piles HP14x117			Foot	607
Driving Piles			Foot	607
Pile Shoes			Each	10

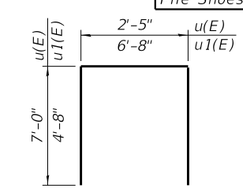

BAR u(E) & u1(E)

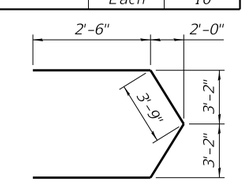

BAR u3(E)

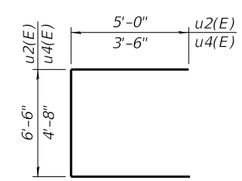

BAR u2(E) & u4(E)

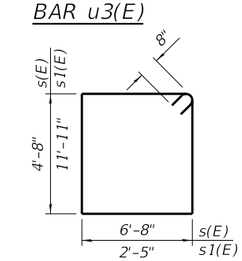

BAR s(E) & s1(E)

PILE DATA

Type: Steel Pile HP 14X117 with shoes
Nominal Required Bearing: 929 kips
Factored Resistance Available: 511 kips
Est. Length: 61' (Battered) & 59.5' (non-Battered)
(Piles shall be driven to top of rock)
No. Production Piles: 10
No. Test Piles: None

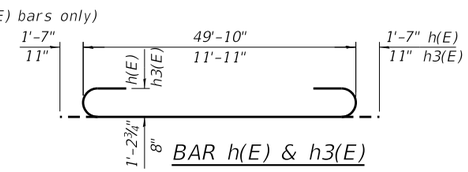

BAR h(E) & h3(E)

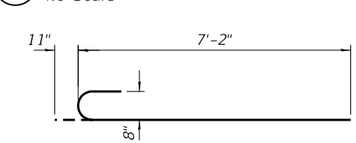

BAR v(E)

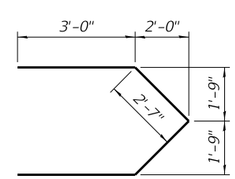

BAR h6(E)

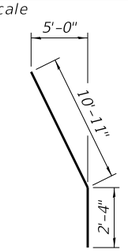

BAR v1(E)

NOTES

Pour steps monolithically with cap.

Reinforcement bars designated (E) shall be epoxy coated.

Position of reinforcement shall be adhered to for this Strut & Tie design.

See Structural sheet 16 of 67 for detail of existing pier removal.

Steel nose angles and plates shall be hot-dipped galvaized in accordance with AASHTO M232.

WILLETT HOFMANN & ASSOCIATES INC
ENGINEERING ARCHITECTURE LAND SURVEYING
809 EAST 2ND STREET, DIXON, IL 61021-0367
T: 815-284-3381 DESIGN FIRM: #184-000918

DESIGNED - BKC	REVISED -		
CHECKED - BKC/SM	REVISED -		
DRAWN - FDL	REVISED -		
CHECKED - BKC	REVISED -		

LASALLE & KENDALL COUNTY
FAS 171(CH 3–MILLINGTON RD) OVER FOX RIVER
STATION 20+00

PHASE 3: PIER # 1 - SECTIONS, BILL OF MATERIAL & DETAILS
STRUCTURE NO. 047-3000

STRUCTURAL SHEET NO. 22 OF 67 SHEETS

FAS RTE.	SECTION	COUNTY	TOTAL SHEETS	SHEET NO.
171	17-00802-00-BR	LASALLE	93	34
	17-00142-00-BR	KENDALL		

WHA# 1087J17 ILLINOIS FED. AID PROJECT WZPE(199) CONTRACT NO. 87683

FILE = S:\PROJECTS\2017\1087J17_KCH\DESIGN\CAD_SHEETS\1087J17_Pier 1 Details.dgn

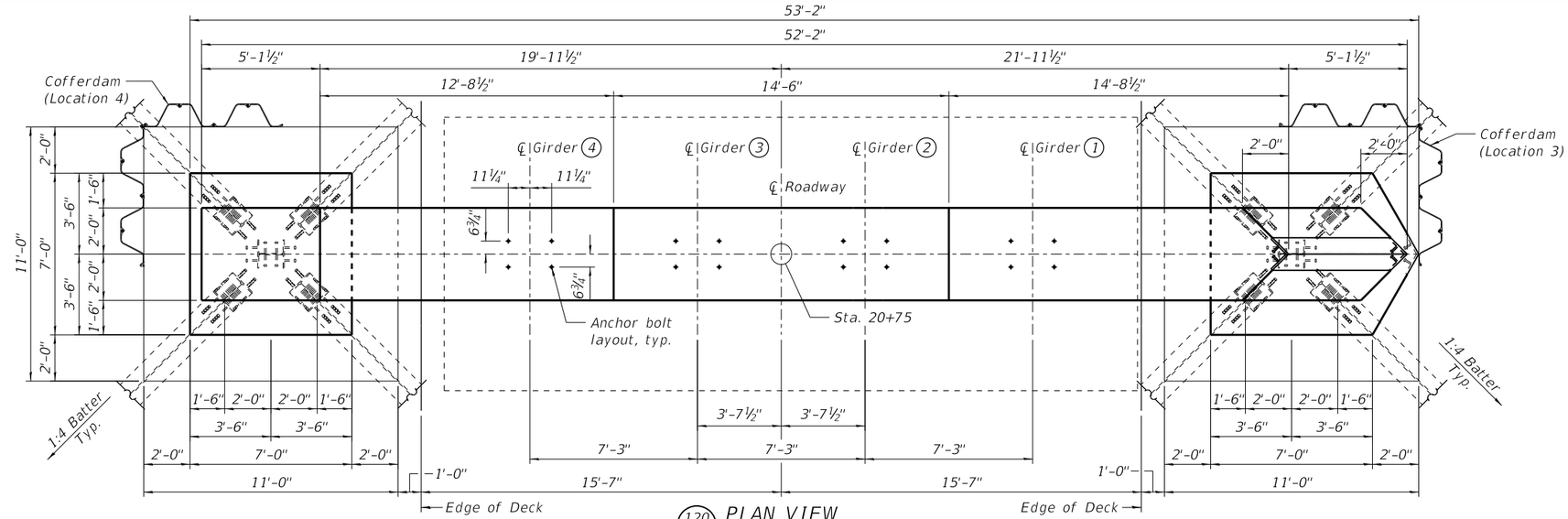

120/23 PLAN VIEW
No Scale

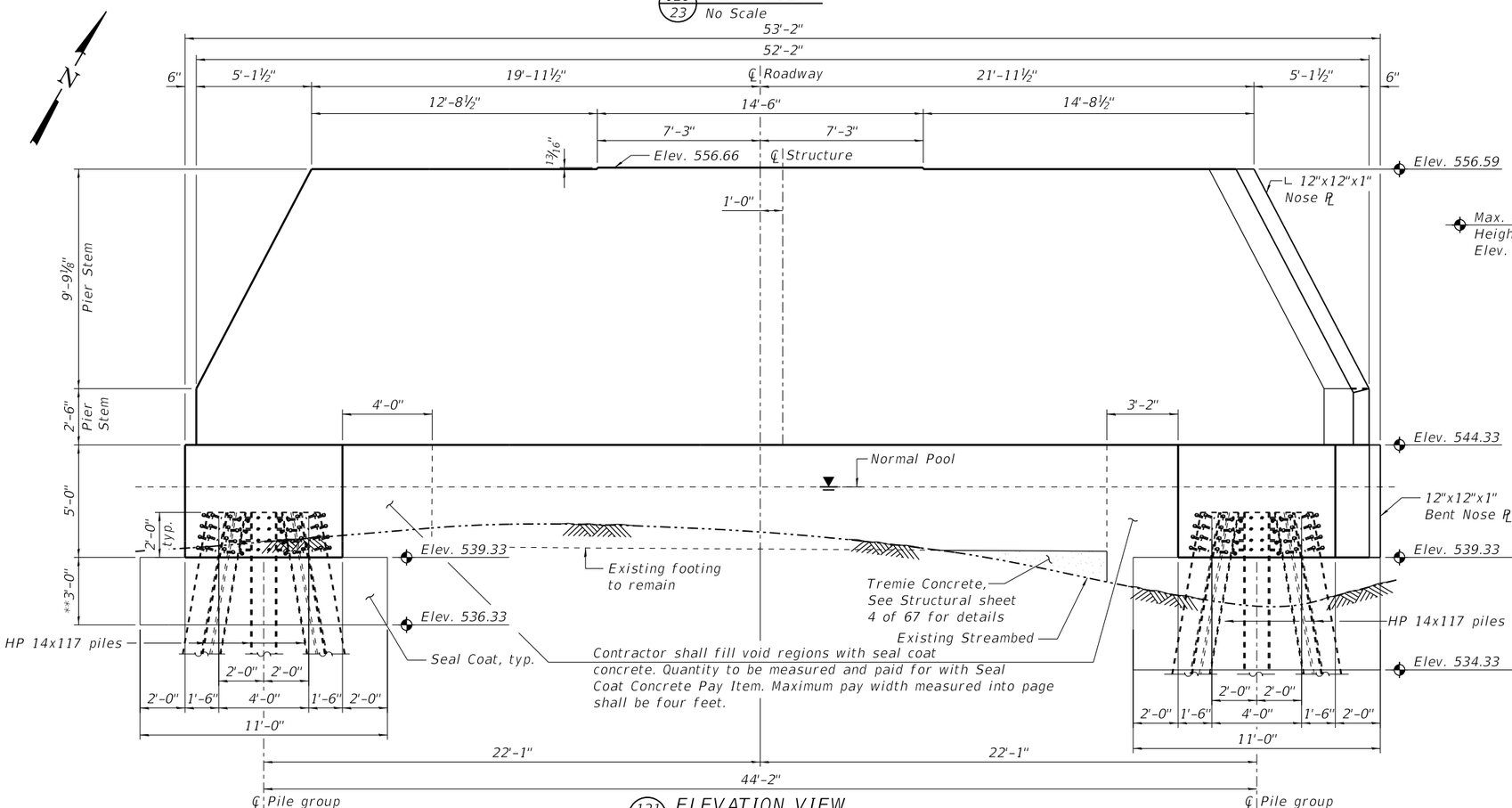

121/23 ELEVATION VIEW
No Scale

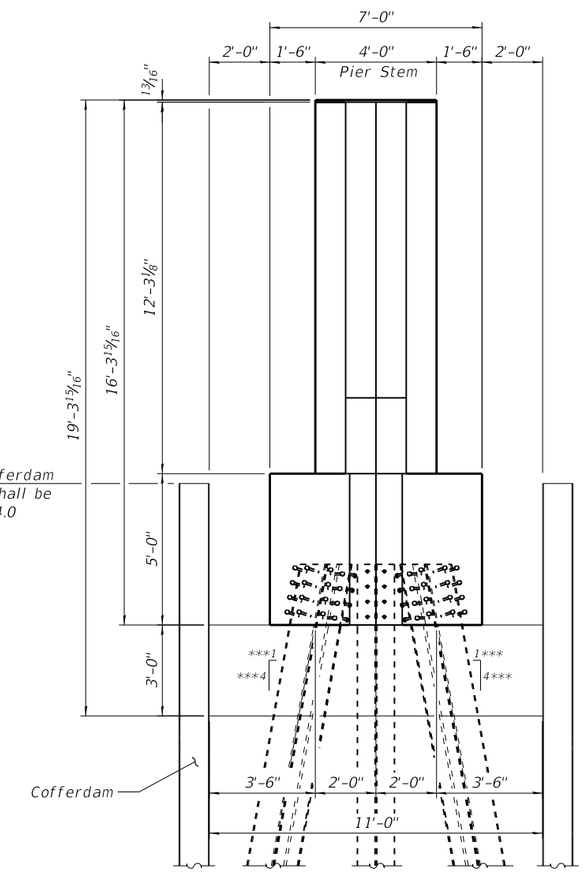

122/23 EAST END VIEW
No Scale

NOTES

See Structural Sheet 26 of 67 for Bill of material.

Plan View pile dimensions are referenced from bottom of pile cap at Elev. 539.33, typ..

Details 115 - 119 are reserved.

* East end of Pier #2 shall have a minimum seal coat thickness of 5'-0" regardless of calculations.

** Minimum seal coat thickness.

*** See Plan View for correct orientation

FILE = S:\PROJECTS\2017\1087J17_KC\DESIGN\CAD_SHEETS\1087J17_Pier 2 Details.dgn

WILLETT HOFMANN & ASSOCIATES INC
ENGINEERING ARCHITECTURE LAND SURVEYING
809 EAST 2ND STREET, DIXON, IL 61021-0367
T: 815-284-3381 DESIGN FIRM: #184-000918

DESIGNED - BKC	REVISED -		
CHECKED - BKC/SM	REVISED -		
DRAWN - FDL	REVISED -		
CHECKED - BKC	REVISED -		

LASALLE & KENDALL COUNTY
FAS 171(CH 3–MILLINGTON RD) OVER FOX RIVER
STATION 20+00

PHASE 3: PIER # 2 - PLAN AND ELEVATION
STRUCTURE NO. 047-3000

STRUCTURAL SHEET NO. 23 OF 67 SHEETS

FAS RTE.	SECTION	COUNTY	TOTAL SHEETS	SHEET NO.
171	17-00802-00-BR	LASALLE	93	35
	17-00142-00-BR	KENDALL		

WHA= 1087J17 ILLINOIS FED. AID PROJECT WZPE(199) CONTRACT NO. 87683

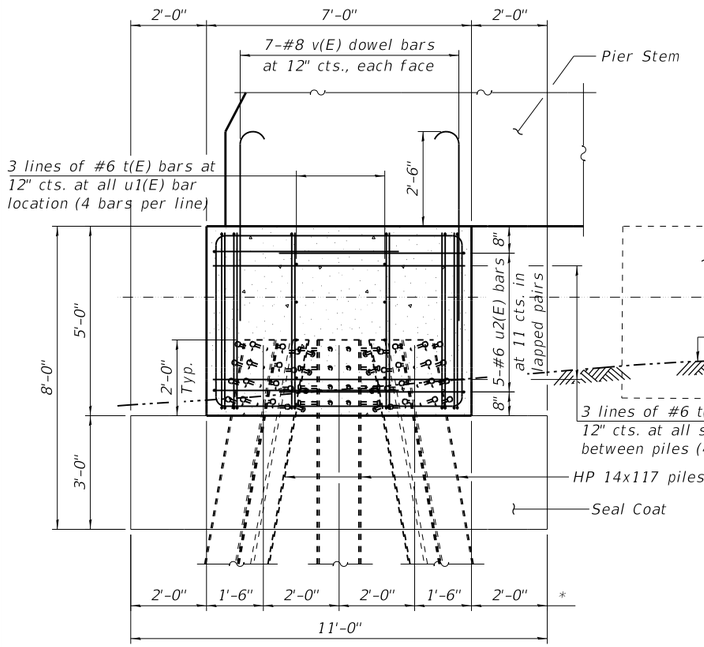

DOWNSTREAM FOOTING

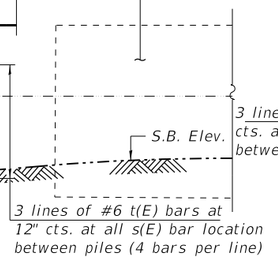

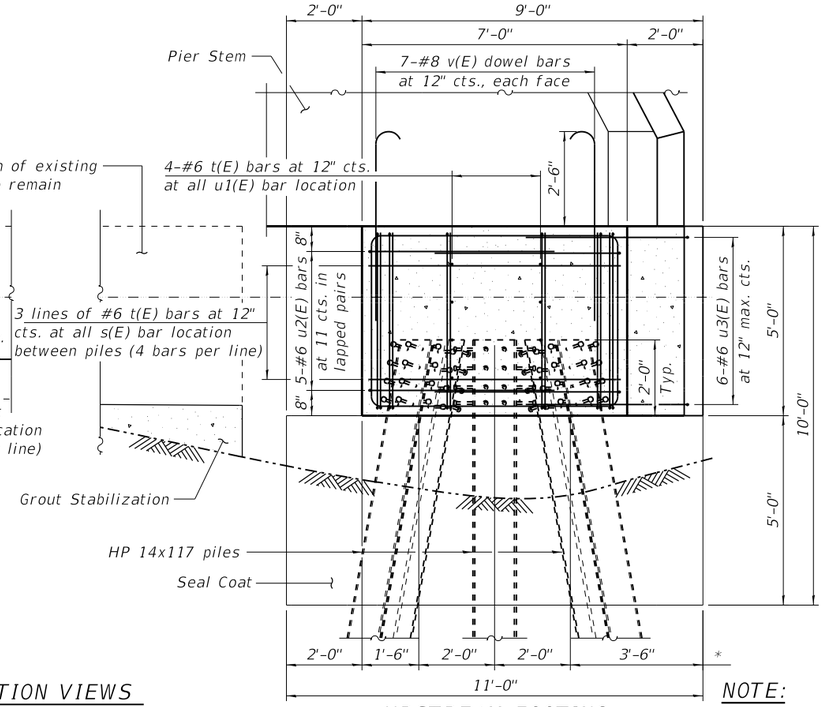

UPSTREAM FOOTING

123/24 ELEVATION VIEWS
No Scale

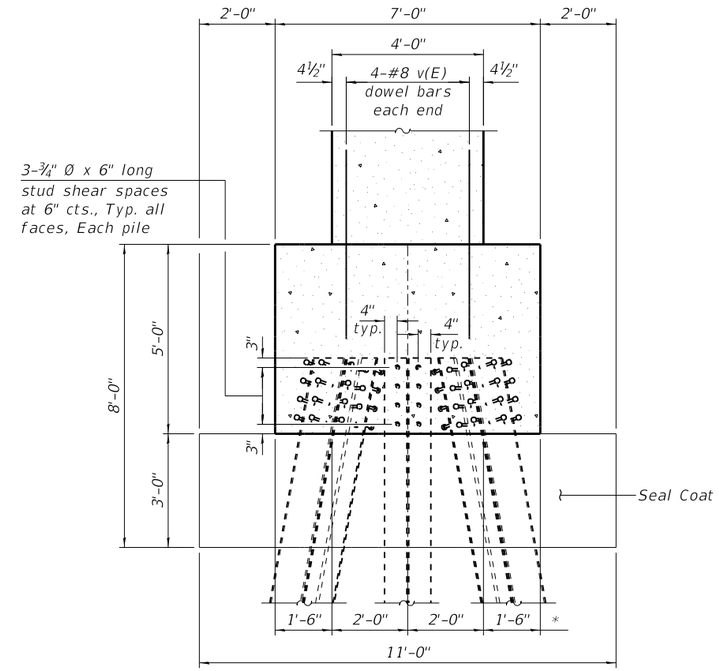

125/24 DOWNSTREAM END - ELEVATION SECTION
No Scale

NOTE:
Stud shear connectors sall be ¾" Ø X 6" Granular or solid flux filled headed studs, automatically end welded to flange. (320 Required)

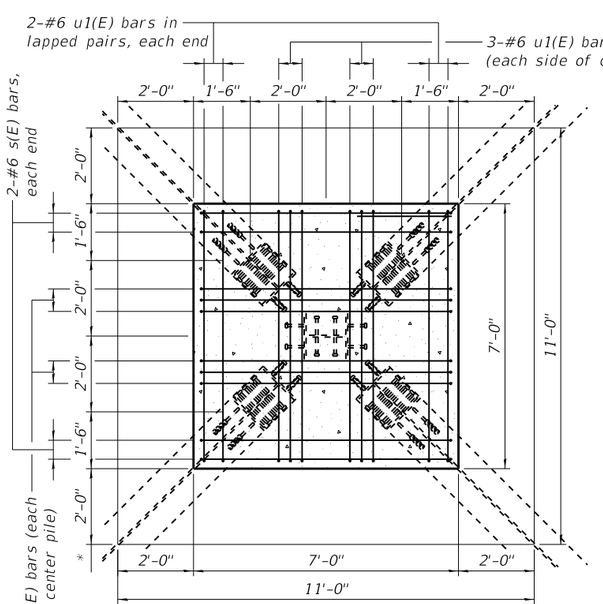

DOWNSTREAM FOOTING

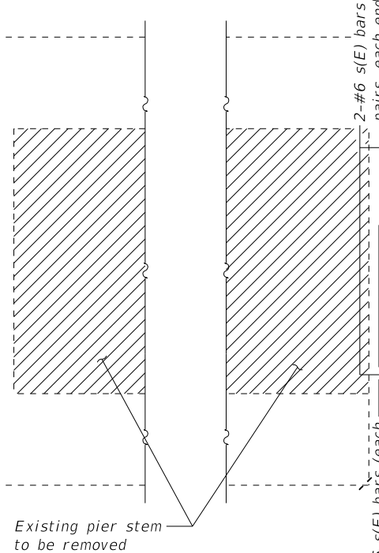

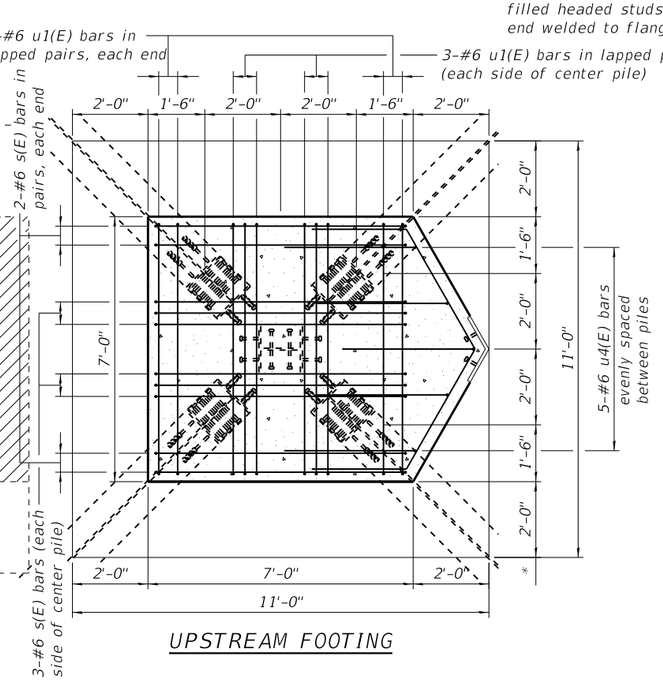

UPSTREAM FOOTING

124/24 PLAN VIEWS
No Scale

*Dimensions at Elev. 539.33, typ.

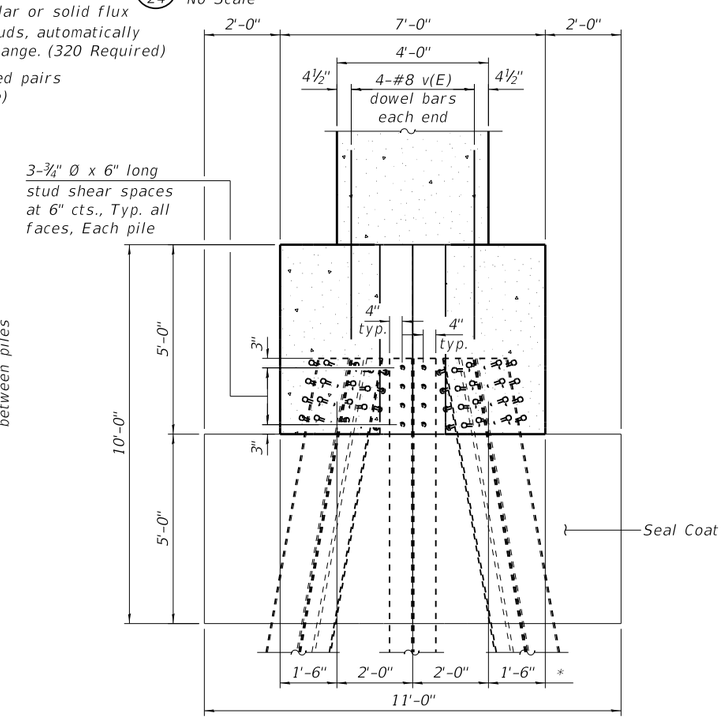

126/24 UPSTREAM END - ELEVATION SECTION
No Scale

WILLETT HOFMANN & ASSOCIATES INC
ENGINEERING ARCHITECTURE LAND SURVEYING
809 EAST 2ND STREET, DIXON, IL 61021-0367
T: 815-284-3381 DESIGN FIRM: #184-000918

DESIGNED - BKC	REVISED -		
CHECKED - BKC/SM	REVISED -		
DRAWN - FDL	REVISED -		
CHECKED - BKC	REVISED -		

LASALLE & KENDALL COUNTY
FAS 171(CH 3–MILLINGTON RD) OVER FOX RIVER
STATION 20+00

PHASE 3: PIER # 2 - FOOTING DETAILS
STRUCTURE NO. 047-3000

STRUCTURAL SHEET NO. 24 OF 67 SHEETS

FAS RTE.	SECTION	COUNTY	TOTAL SHEETS	SHEET NO.
171	17-00802-00-BR	LASALLE	93	36
	17-00142-00-BR	KENDALL		

WHA# 1087J17 | ILLINOIS | FED. AID PROJECT WZPE(199) | CONTRACT NO. 87683

FILE = S:\PROJECTS\2017\1087J17_KCH\DESIGN\CAD_SHEETS\1087J17_Pier 2 Details.dgn

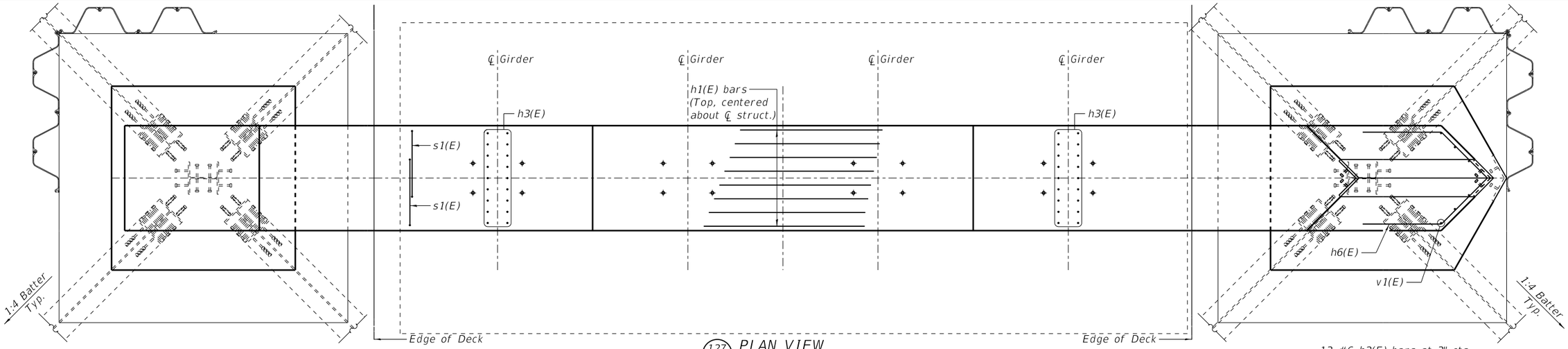

127/25 PLAN VIEW
No Scale

W.P. = Working Point

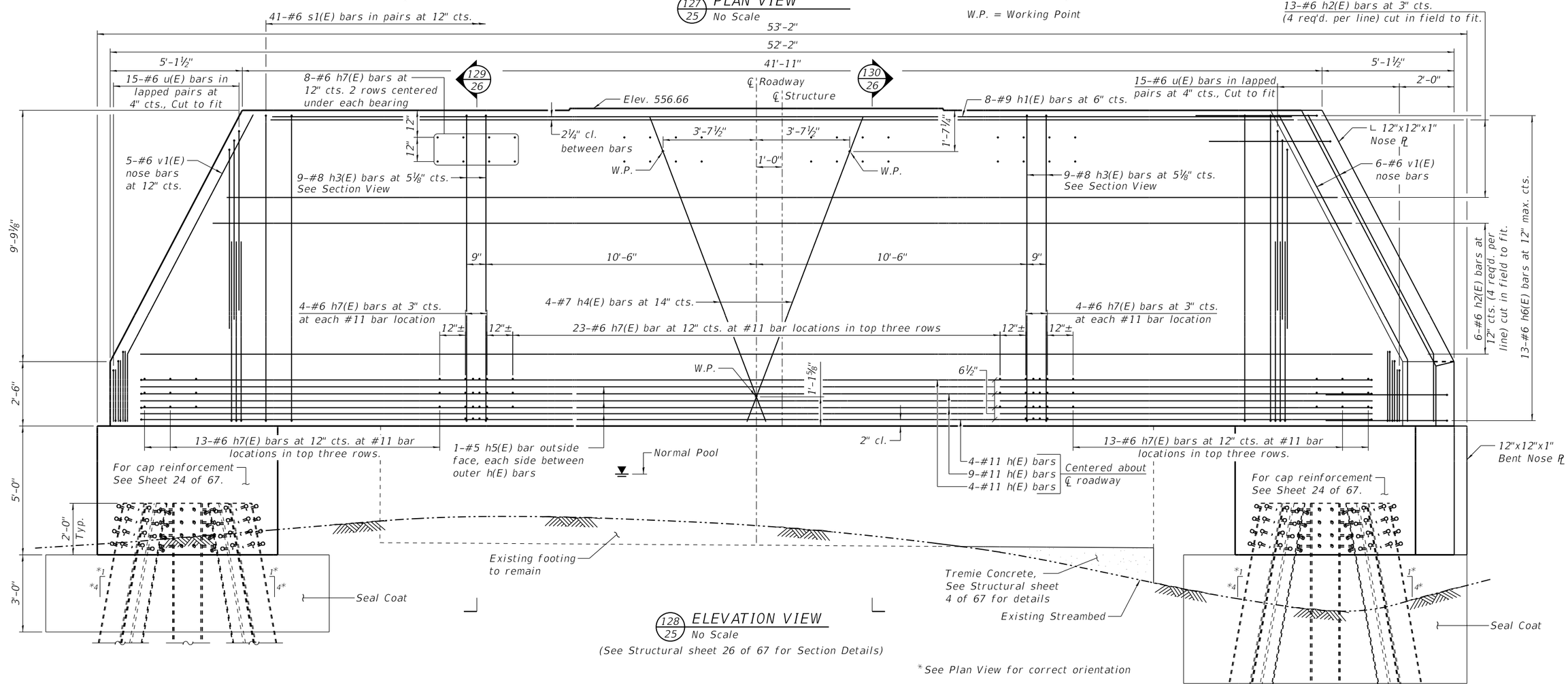

128/25 ELEVATION VIEW
No Scale
(See Structural sheet 26 of 67 for Section Details)

*See Plan View for correct orientation

FILE = S:\PROJECTS\2017\1087J17_KCH\DESIGN\CAD_SHEETS\1087J17_Pier 2 Details.dgn

WILLETT HOFMANN & ASSOCIATES INC
ENGINEERING ARCHITECTURE LAND SURVEYING
809 EAST 2ND STREET, DIXON, IL 61021-0367
T: 815-284-3381 DESIGN FIRM: #184-000918

DESIGNED - BKC	REVISED -		
CHECKED - BKC/SM	REVISED -		
DRAWN - FDL	REVISED -		
CHECKED - BKC	REVISED -		

LASALLE & KENDALL COUNTY
FAS 171(CH 3–MILLINGTON RD) OVER FOX RIVER
STATION 20+00

PHASE 3: PIER # 2 - PIER STEM REINFORCEMENT DETAILS
STRUCTURE NO. 047-3000

STRUCTURAL SHEET NO. 25 OF 67 SHEETS

FAS RTE.	SECTION	COUNTY	TOTAL SHEETS	SHEET NO.
171	17-00802-00-BR	LASALLE	93	37
	17-00142-00-BR	KENDALL		

WHA# 1087J17 | ILLINOIS | FED. AID PROJECT WZPE(199) | CONTRACT NO. 87683

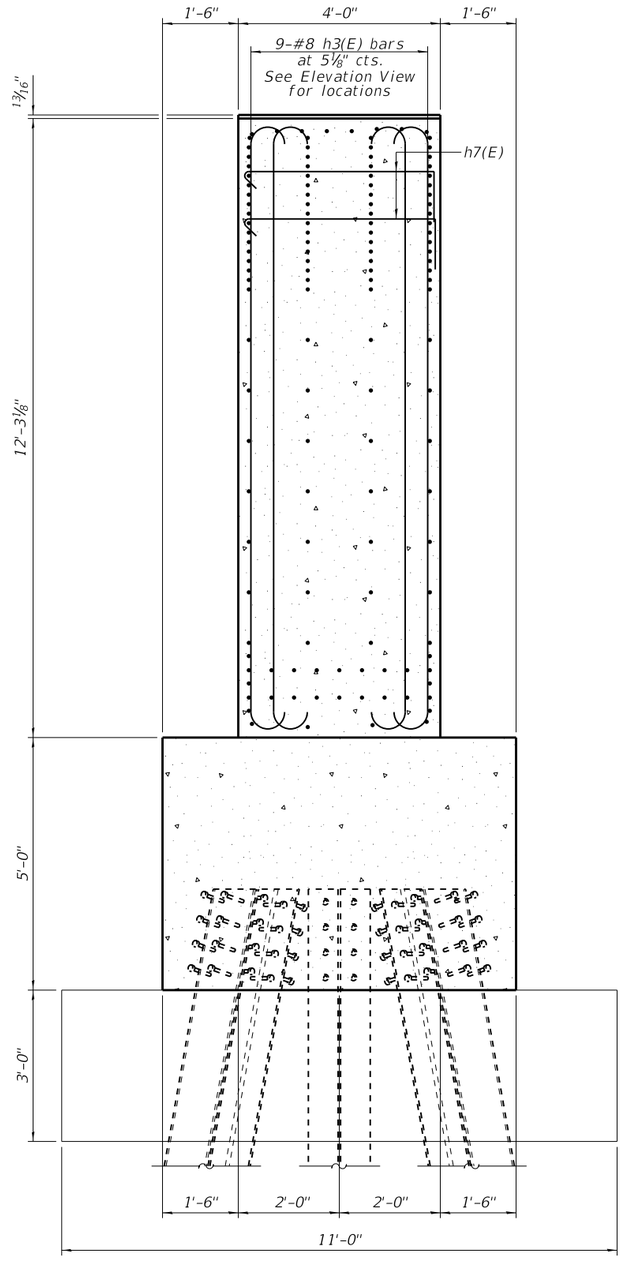

129/26 SECTION
No Scale
(Showing placement of h3(E) bars only)

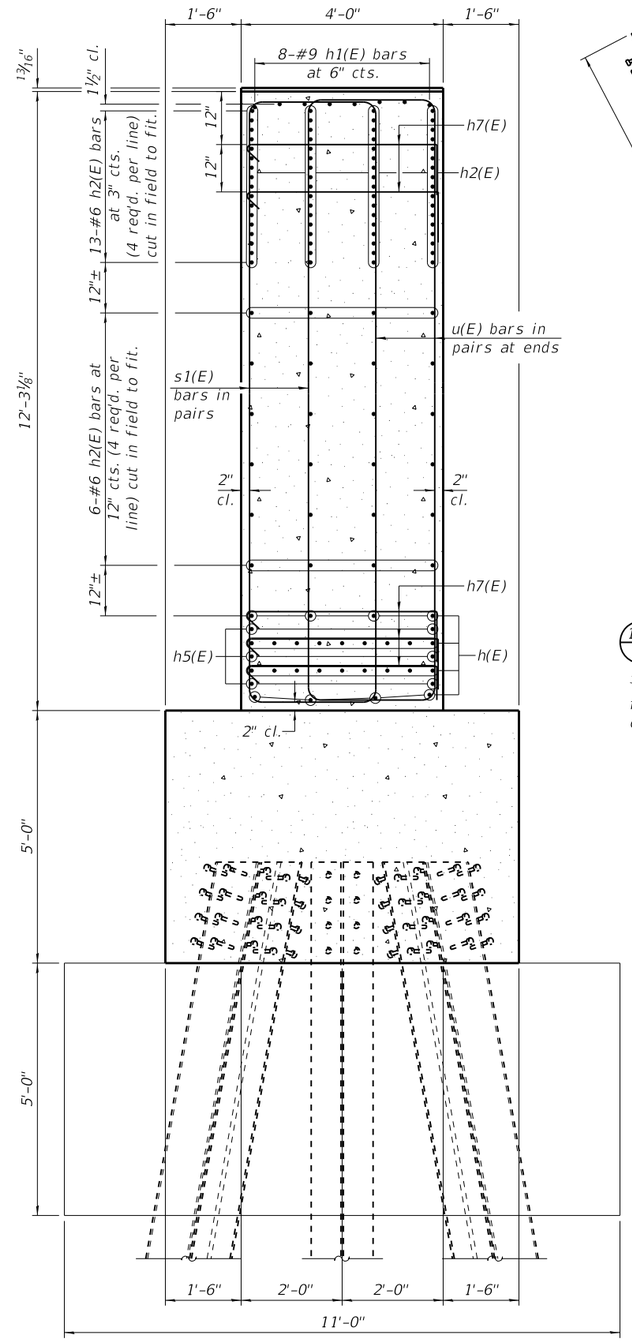

130/26 SECTION
No Scale

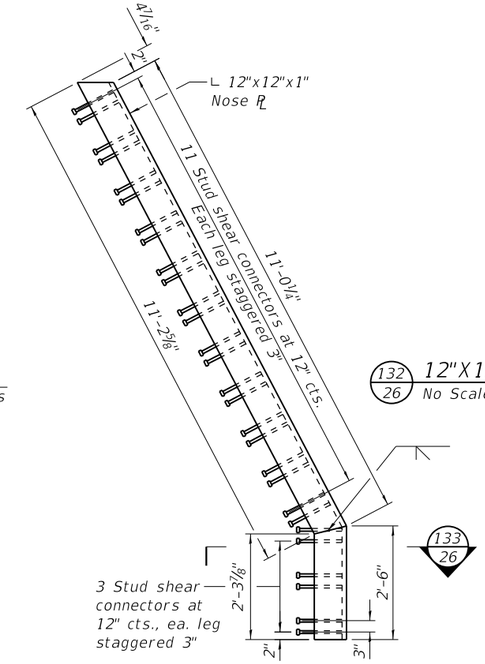

133/26

131/26 L 12"X12"X1" NOSE PLATE
No Scale

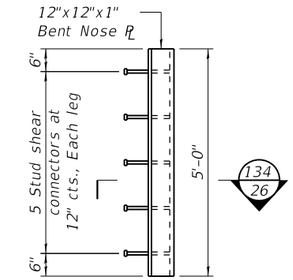

134/26

132/26 12"X12"X1" BENT NOSE PLATE
No Scale

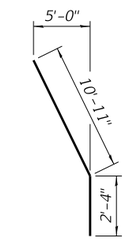

BAR v1(E)

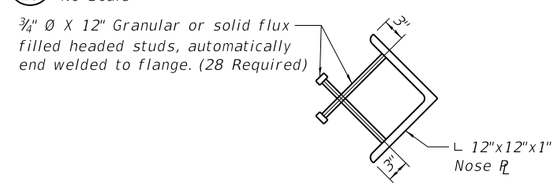

133/26 SECTION
No Scale

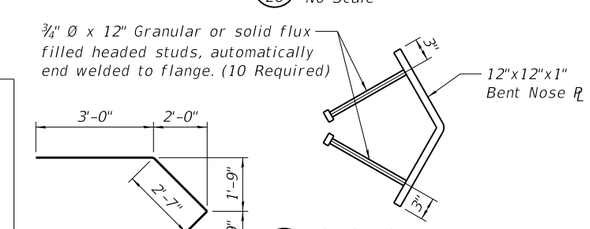

134/26 SECTION
No Scale

PIER #2
BILL OF MATERIAL

Bar	No.	Size	Length	Shape
h(E)	26	#11	53'-0"	
h1(E)	8	#9	39'-7"	
h2(E)	76	#6	49'-10"	
h3(E)	36	#8	13'-9"	
h4(E)	8	#7	12'-8"	
h5(E)	6	#5	49'-10"	
h6(E)	13	#6	11'-2"	
h7(E)	211	#6	5'-4"	
s(E)	20	#6	24'-0"	
s1(E)	82	#6	30'-0"	
t(E)	48	#6	6'-8"	
u(E)	120	#6	16'-5"	
u1(E)	40	#6	16'-0"	
u2(E)	20	#6	16'-6"	
u3(E)	6	#6	12'-6"	
u4(E)	5	#6	11'-8"	
v(E)	44	#8	8'-1"	
v1(E)	11	#6	18'-3"	
Cofferdam Excavation			Cu. Yd.	33
Cofferdam Type 2 (Location 3)			Each	1
Cofferdam Type 2 (Location 4)			Each	1
Concrete Structures			Cu. Yd.	107
Seal Coat Concrete			Cu. Yd.	41.4
Furnishing & Erecting Structural Steel			Pound	1,456
Stud Shear Connectors			Each	358
Reinforcement Bars, Epoxy Coated			Pound	28,600
Furnishing Steel Piles HP14x117			Foot	607
Driving Piles			Foot	607
Pile Shoes			Each	10

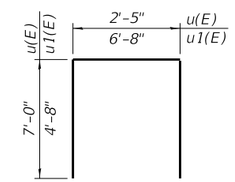

BAR u(E) & u1(E)

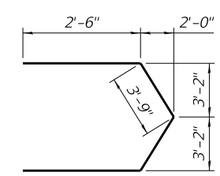

BAR u3(E)

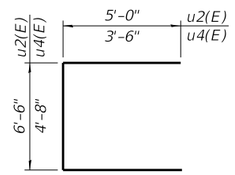

BAR u2(E) & u4(E)

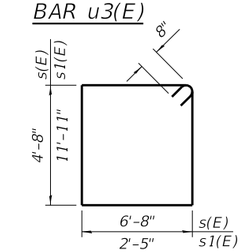

BAR s(E) & s1(E)

PILE DATA

Type: Steel Pile HP 14X117 with shoes
Nominal Required Bearing: 929 kips
Factored Resistance Available: 511 kips
Est. Length: 61' (Battered) & 59.5' (non-Battered)
(Piles shall be driven to top of rock)
No. Production Piles: 10
No. Test Piles: None

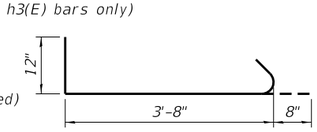

BAR h7(E)

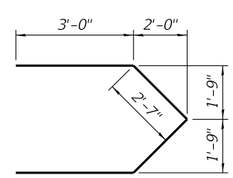

BAR h6(E)

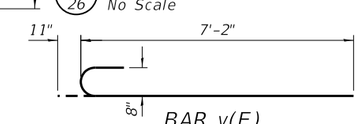

BAR v(E)

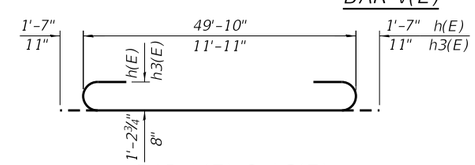

BAR h(E) & h3(E)

NOTES

Pour steps monolithically with cap.

Reinforcement bars designated (E) shall be epoxy coated.

Posistion of reinforcement shall be adhered to for this Strut & Tie design.

See Structural sheet 17 of 67 for detail of existing pier removal.

Steel nose angles and plates shall be hot-dipped galvaized in accordance with AASHTO M232.

WILLETT HOFMANN & ASSOCIATES INC
ENGINEERING ARCHITECTURE LAND SURVEYING
809 EAST 2ND STREET, DIXON, IL 61021-0367
T: 815-284-3381 DESIGN FIRM: #184-000918

DESIGNED - BKC	REVISED -		
CHECKED - BKC/SM	REVISED -		
DRAWN - FDL	REVISED -		
CHECKED - BKC	REVISED -		

LASALLE & KENDALL COUNTY
FAS 171(CH 3–MILLINGTON RD) OVER FOX RIVER
STATION 20+00

PHASE 3: PIER # 2 - SECTION, BILL OF MATERIAL & DETAILS
STRUCTURE NO. 047-3000

STRUCTURAL SHEET NO. 26 OF 67 SHEETS

FAS RTE.	SECTION	COUNTY	TOTAL SHEETS	SHEET NO.
171	17-00802-00-BR	LASALLE	93	38
	17-00142-00-BR	KENDALL		

WHA# 1087J17 ILLINOIS FED. AID PROJECT WZPE(199) CONTRACT NO. 87683

FILE = S:\PROJECTS\2017\1087J17_KCH\DESIGN\CAD_SHEETS\1087J17_Pier 2 Details.dgn

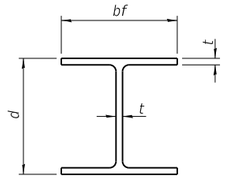

STEEL PILE TABLE

Designation	Depth d	Flange width bf	Web and Flange thickness t	Encasement diameter A
HP 14x117	14¼"	14⅞"	13/16"	30"
x102	14"	14¾"	11/16"	30"
x89	13⅞"	14¾"	⅝"	30"
x73	13⅝"	14⅝"	½"	30"
HP 12x84	12¼"	12¼"	11/16"	24"
x74	12⅛"	12¼"	⅝"	24"
x63	12"	12⅛"	½"	24"
x53	11¾"	12"	7/16"	24"
HP 10x57	10"	10¼"	9/16"	24"
x42	9¾"	10⅛"	7/16"	24"
HP 8x36	8"	8⅛"	7/16"	18"

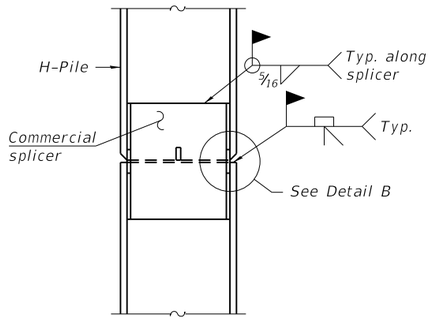

ELEVATION

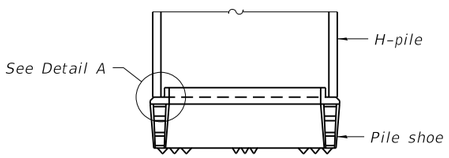

ELEVATION

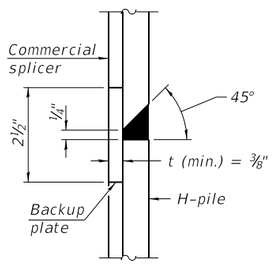

DETAIL "B"

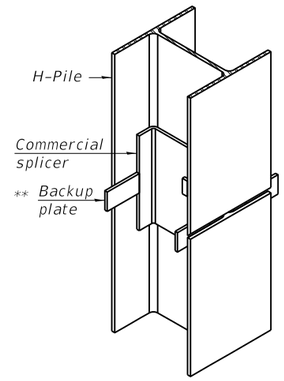

ISOMETRIC VIEW

WELDED COMMERCIAL SPLICE

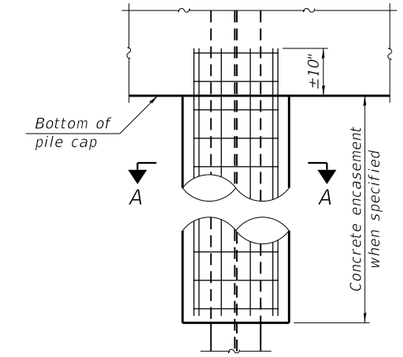

ELEVATION

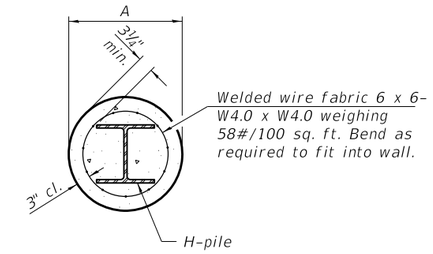

SECTION A-A

INDIVIDUAL PILE CONCRETE ENCASEMENT

(Forms for encasement may be omitted when soil conditions permit).

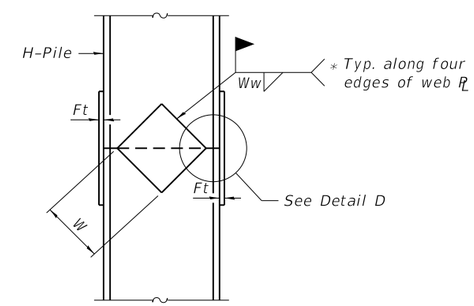

ELEVATION

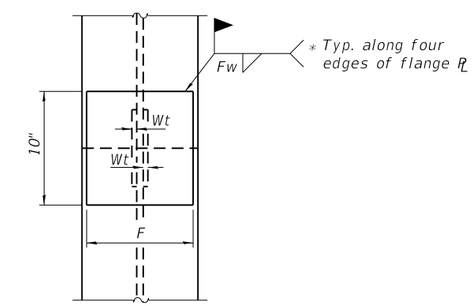

END VIEW

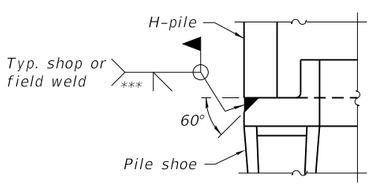

DETAIL A

SHOE ATTACHMENT

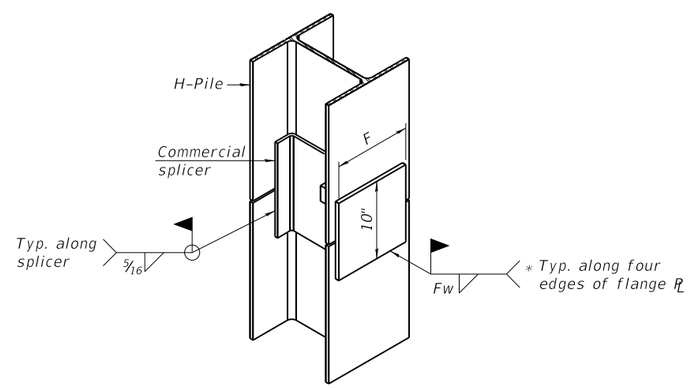

ISOMETRIC VIEW

WELDED COMMERCIAL SPLICE ALTERNATE

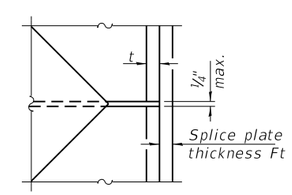

DETAIL D

Designation	F	Ft	Fw	W	Wt	Ww
HP 14x117	12½"	1"	⅞"	7¾"	⅝"	½"
x102	12½"	⅞"	¾"	7¾"	⅝"	½"
x89	12½"	¾"	11/16"	7¾"	⅝"	½"
x73	12½"	⅝"	9/16"	7¾"	⅝"	½"
HP 12x84	10"	⅞"	11/16"	6½"	⅝"	½"
x74	10"	⅞"	11/16"	6½"	⅝"	½"
x63	10"	⅝"	½"	6½"	½"	⅜"
x53	10"	⅝"	½"	6½"	½"	⅜"
HP 10x57	8"	¾"	9/16"	5¼"	½"	⅜"
x42	8"	⅝"	9/16"	5¼"	½"	⅜"
HP 8x36	7"	⅝"	7/16"	4¼"	½"	⅜"

WELDED PLATE FIELD SPLICE

Note:
The steel H-piles shall be according to AASHTO M270 Grade 50.

* Interrupt welds ¼" from end of web and/or each flange.

** Remove portions of backup plates that extend outside the flanges.

*** Weld size per pile shoe manufacturer (5/16" min.).

F-HP 8-11-2017

FILE = S:\PROJECTS\2017\1087J17_KCH\DESIGN\CAD_SHEETS\1087J17_HP Pile Details.dgn

WILLETT HOFMANN & ASSOCIATES INC
ENGINEERING ARCHITECTURE LAND SURVEYING
809 EAST 2ND STREET, DIXON, IL 61021-0367
T: 815-284-3381 DESIGN FIRM: #184-000918

DESIGNED - BKC	REVISED -	LASALLE & KENDALL COUNTY	HP PILE DETAILS
CHECKED - PLP	REVISED -	FAS 171(CH 3-MILLINGTON RD) OVER FOX RIVER	STRUCTURE NO. 047-3000
DRAWN - RDA	REVISED -	STATION 20+00	STRUCTURAL SHEET NO. 27 OF 67 SHEETS
CHECKED - BKC	REVISED -		

FAS RTE.	SECTION	COUNTY	TOTAL SHEETS	SHEET NO.
171	17-00802-00-BR	LASALLE	93	39
	17-00142-00-BR	KENDALL		

WHA# 1087J17 | ILLINOIS | FED. AID PROJECT WZPE(199) | CONTRACT NO. 87683

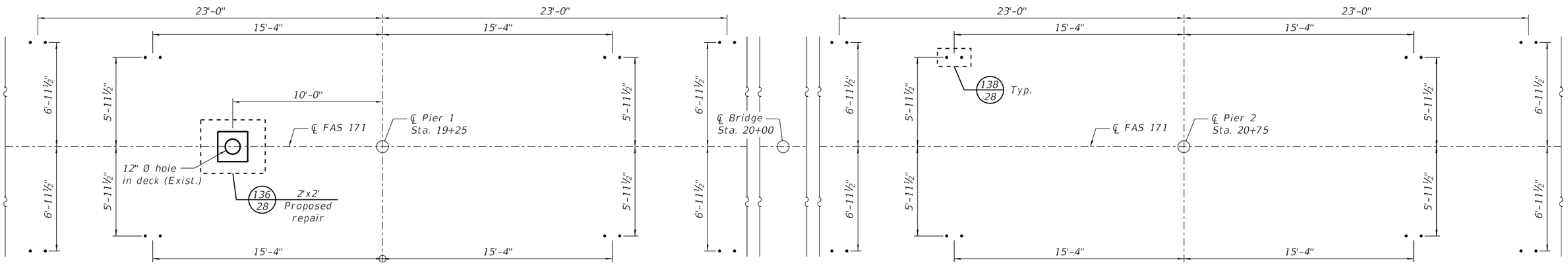

PIER 1

PIER 2

135/28 PARTIAL PLAN
No Scale

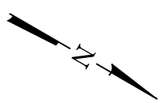

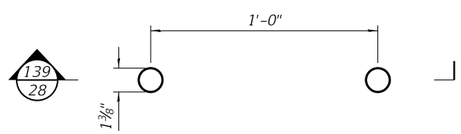

138/28 DETAIL
No Scale

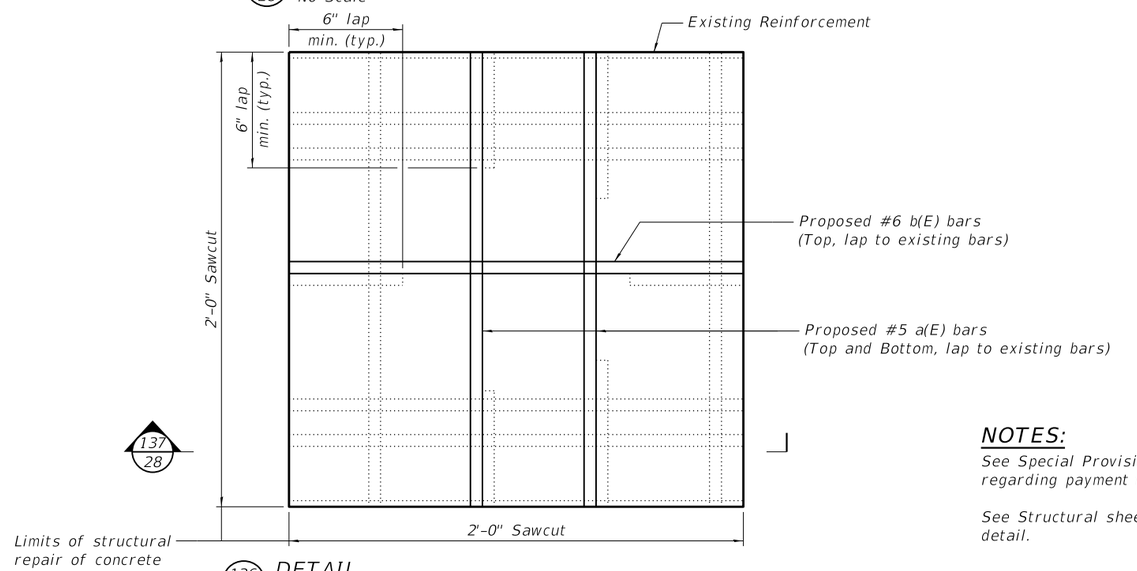

136/28 DETAIL
No Scale

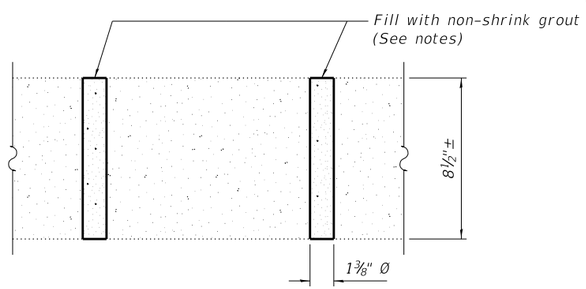

139/28 SECTION THRU LATERAL BRACE CONNECTIONS
No Scale

No. Locations = 16

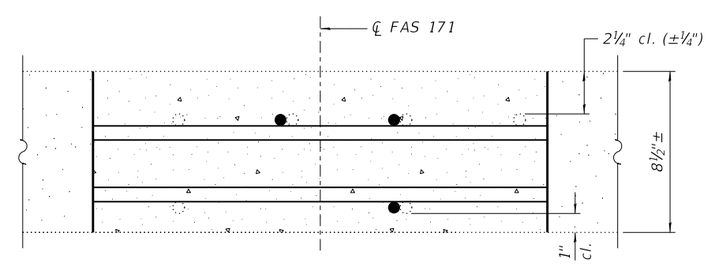

137/28 SECTION THRU DECK
No Scale

NOTES:

See Special Provision for "Temporary Support System" regarding payment for non-shrink grout repairs.

See Structural sheet 51 of 67 for existing reinforcement detail.

BILL OF MATERIAL

Bar	No.	Size	Length	Shape
a(E)	3	#5	2'-0"	———
b(E)	1	#6	2'-0"	———
Structural Repair of Concrete (Depth Greater Than 5 Inches)			Sq. Ft.	4
Reinforcement Bars, Epoxy Coated			Pound	10

FILE = S:\PROJECTS\2017\1087J17_KCH\DESIGN\CAD_SHEETS\1087J17_Deck Repair.dgn

WILLETT HOFMANN & ASSOCIATES INC
ENGINEERING ARCHITECTURE LAND SURVEYING
809 EAST 2ND STREET, DIXON, IL 61021-0367
T: 815-284-3381 DESIGN FIRM: #184-000918

DESIGNED - SM	REVISED -		
CHECKED - PLP	REVISED -		
DRAWN - RDA	REVISED -		
CHECKED - BKC	REVISED -		

LASALLE & KENDALL COUNTY
FAS 171(CH 3–MILLINGTON RD) OVER FOX RIVER
STATION 20+00

PHASE 3: BRIDGE DECK REPAIRS
STRUCTURE NO. 047-3000

STRUCTURAL SHEET NO. 28 OF 67 SHEETS

FAS RTE.	SECTION	COUNTY	TOTAL SHEETS	SHEET NO.
171	17-00802-00-BR	LASALLE	93	40
	17-00142-00-BR	KENDALL		

WHA# 1087J17 | ILLINOIS | FED. AID PROJECT WZPE(199) | CONTRACT NO. 87683

PROJECT **Proposed Bridge Repairs, Millington Road over Fox River, Kendall Co., Illinois**

CLIENT **Willett Hofmann and Associates, Inc., Dixon, Illinois**

BORING **101** DATE STARTED **5-23-17** DATE COMPLETED **5-25-17** JOB **L-86,754**

ELEVATIONS

GROUND SURFACE **100.1 (564.82)**

END OF BORING **11.4 (476.12)**

WATER LEVEL OBSERVATIONS

WHILE DRILLING **20.0 '**

AT END OF BORING **N/A - wash boring**

24 HOURS

On Centerline
10'S of South Pier Centerline

DISTANCE BELOW SURFACE IN FEET	LENGTH RECOVERY	SAMPLE NO.	SAMPLE TYPE	N	WC	Qu	γ_{DRY}	DEPTH	ELEV.	SOIL DESCRIPTIONS
0								0.8	99.3	P. C. Concrete Bridge Deck
5										
10										Air
15										
20								20.0	80.1	Water
25		1	SS	4 11 24				24.5	75.6	Dense dark gray silty SAND and GRAVEL, trace organic, occasional Cobbles, wet (SM/GM)
30		2	SS	18 15 13				28.0	72.1	Firm tan silty SAND and GRAVEL, occasional Cobbles, wet (SM/GM)
		3	SS	9 6 7				30.5	69.6	Firm gray and dark gray SAND and GRAVEL, silty SAND and GRAVEL, trace organic, wet (SM/GM)
35		4	SS	11 7 6				35.5	64.6	Firm tan and gray SAND, some gravel, occasional Cobbles, wet (SP/GP)
		5	SS	14 10 7				38.0	62.1	Dense tan SAND and GRAVEL, occasional Cobbles, wet (SP-SM/GP-GM)
40		6	SS	13 14 22				40.5	59.6	Very dense tan silty SAND and GRAVEL, occasional Cobbles, wet (SM/GM)
		7	SS	14 21 34				43.0	57.1	Firm tan GRAVEL, some sand, occasional Cobbles, wet (GP-SM)
45		8	SS	18 9 9				45.5	54.6	Firm gray clayey SILT, trace to little sand, very moist (ML)
		9	SS	8 8 6	20.6					
50		10	SS	5	18.7					

DRILL RIG NO. **334**

Division lines between deposits represent approximate boundaries between soil types; in-situ, the transition may be gradual.

End of Boring at 88.7'

PROJECT **Proposed Bridge Repairs, Millington Road over Fox River, Kendall Co., Illinois**

CLIENT **Willett Hofmann and Associates, Inc., Dixon, Illinois**

BORING **101** DATE STARTED **5-23-17** DATE COMPLETED **5-25-17** JOB **L-86,754**

ELEVATIONS

GROUND SURFACE **100.1 (564.82)**

END OF BORING **11.4 (476.12)**

WATER LEVEL OBSERVATIONS

WHILE DRILLING **20.0 '**

AT END OF BORING **N/A - wash boring**

24 HOURS

On Centerline
10'S of South Pier Centerline

DISTANCE BELOW SURFACE IN FEET	LENGTH RECOVERY	SAMPLE NO.	SAMPLE TYPE	N	WC	Qu	γ_{DRY}	DEPTH	ELEV.	SOIL DESCRIPTIONS
50		11	SS	6 7 6	11.4	2.05B 2.0*		50.5	49.6	Very tough gray sandy CLAY, trace gravel, moist (CL-ML)
55		12	SS	6 8 5	9.9	2.0*				
		13	SS	7 9 27				58.0	42.1	Dense gray silty fine SAND, wet (SM)
60				21 19						
		14	SS	9	9.4	3.68B 4.0*		63.0	37.1	Very tough gray sandy CLAY, trace gravel, moist (CL-ML)
65				10 14						
		15	SS	17	17.7	3.5*		68.0	32.1	Dense gray clayey SILT, trace to little sand, moist (ML)
70				17 25						
		16 A B	SS	53 50/6"	17.3	4.25*		73.0	27.1	Hard gray silty CLAY, trace sand and gravel, occasional shale fragments, moist (CL)
75								74.0	26.1	Very dense silty SAND and GRAVEL with fractured limestone fragments, wet (SM/GM) (possible weathered limestone bedrock)
		17	SS	100/4"				78.0	22.1	Very dense white and gray silty fine SAND, wet (SM) (probable weathered sandstone bedrock)
80										
		18	SS	100/1"				83.0	17.1	Hard Drilling - probable sandstone bedrock
85										
		19	SS	100/2"						
90										* Approximate unconfined compressive strength based on measurements with a calibrated pocket penetrometer.
95										B = Bulge-type failure
100										Split spoon refusal at 88.7 on probable bedrock.

DRILL RIG NO. **334**

Division lines between deposits represent approximate boundaries between soil types; in-situ, the transition may be gradual.

End of Boring at 88.7'

TSC_EOB 86754.GPJ TSC_ALL.GDT 6/2017

FILE = S:\PROJECTS\2017\1087J17_KCH\DESIGN\CAD_SHEETS\1087J17_Boring Logs.dgn

WILLETT HOFMANN & ASSOCIATES INC
ENGINEERING ARCHITECTURE LAND SURVEYING
809 EAST 2ND STREET, DIXON, IL 61021-0367
T: 815-284-3381 DESIGN FIRM: #184-000918

DESIGNED - BKC	REVISED -		
CHECKED - PLP	REVISED -		
DRAWN - RDA	REVISED -		
CHECKED - BKC	REVISED -		

LASALLE & KENDALL COUNTY
FAS 171(CH 3–MILLINGTON RD) OVER FOX RIVER
STATION 20+00

BORING LOGS
STRUCTURE NO. 047-3000

STRUCTURAL SHEET NO. 29 OF 67 SHEETS

FAS RTE.	SECTION	COUNTY	TOTAL SHEETS	SHEET NO.
171	17-00802-00-BR	LASALLE	93	41
	17-00142-00-BR	KENDALL		

WHA* 1087J17 ILLINOIS FED. AID PROJECT WZPE(199) CONTRACT NO. 87683

PROJECT **Proposed Bridge Repairs, Millington Road over Fox River, Kendall Co., Illinois**

CLIENT **Willett Hofmann and Associates, Inc., Dixon, Illinois**

BORING **102** DATE STARTED **5-19-17** DATE COMPLETED **5-22-17** JOB **L-86,754**

ELEVATIONS

GROUND SURFACE **100.6 (565.26)**

END OF BORING **18.1 (482.76)**

Behind North Abutment

WATER LEVEL OBSERVATIONS

WHILE DRILLING **26.0 '**

AT END OF BORING **N/A - wash boring**

24 HOURS

SAMPLE NO.	SAMPLE TYPE	N	WC	Qu	γ_{DRY}	DEPTH	ELEV.	SOIL DESCRIPTIONS
						0.6	100.0	7" Bituminous Concrete
						1.9	98.7	Crushed Stone Base Course, moist (SM/GM)
A 1	SS	24	4.6					FILL - Brown and dark brown silty SAND and GRAVEL, slightly moist to moist (SM/GM)
B 2	SS	20	3.6					
		17						
		7						
		6						
		6						
3	SS	4	4.6					
		4						
		4						
4	SS	11	5.1					
		6						
		5						
5	SS	3	7.6					
		3				13.0	87.6	
		4						FILL - Brown silty SAND and GRAVEL, trace clay, moist (SM/GM)
6	SS	5	5.6					
		3				15.5	85.1	
		5						FILL - Brown and dark brown silty CLAY, some sand, trace gravel and organic, moist (CL)
A 7	SS	4	19.3	1.75*	110	17.0	83.6	
B		7	6.4					FILL - Brown silty SAND and GRAVEL, slightly moist (SM/GM)
		7						
A 8	SS	20	5.4	1.25*	110	19.5	81.1	
B		7	14.6			20.5	80.1	FILL - Brown and dark brown sandy CLAY, trace gravel and organic, moist (CL)
		6						Dark brown ORGANIC CLAY, very moist (OH)
9	SS	7	43.2	0.25*				
		2				23.0	77.6	
		3						Dark brown and dark gray ORGANIC CLAY and silty SAND layers, very moist (OH)
10	SS	6	32.7	0.75*				
		4				25.5	75.1	
		4						Firm tan silty SAND and GRAVEL, occasional Cobbles, very moist to wet (SM/GM)
11	SS	13						
		11						
		12						
12	SS	8						
		7						
		6						
						33.0	67.6	
								Firm gray clayey SILT, some fine sand, very moist (ML)
A 13	SS	9	21.3	3.25*		34.5	66.1	
B		12	18.3					Very tough gray very silty CLAY, little sand and gravel, moist (CL)
		8						
						38.0	62.6	
								Very tough gray sandy CLAY, trace gravel, moist (CL-ML)
A 14	SS	12	9.1	3.76B		39.0	61.6	
B		16		4.0*				Firm gray medium to fine SAND, wet (SP)
		12						
						43.0	57.6	
								Very tough pinkish-brown sandy CLAY, trace gravel, moist (CL-ML)
A 15	SS	14	9.1	3.64S		44.0	56.6	
B		11	13.7	3.5*		44.5	56.1	Very tough gray sandy CLAY, trace gravel, moist (CL-ML)
C		8	10.5	3.0*				
				4.5+*				Hard pinkish-brown sandy CLAY, moist (CL-ML)
						48.0	52.6	
16	SS	12	9.0	4.5+*				Hard gray sandy CLAY, trace gravel, moist (CL-ML)

DISTANCE BELOW SURFACE IN FEET: 0, 5, 10, 15, 20, 25, 30, 35, 40, 45, 50

End of Boring at 82.5'

DRILL RIG NO. **334**

Division lines between deposits represent approximate boundaries between soil types; in-situ, the transition may be gradual.

PROJECT **Proposed Bridge Repairs, Millington Road over Fox River, Kendall Co., Illinois**

CLIENT **Willett Hofmann and Associates, Inc., Dixon, Illinois**

BORING **102** DATE STARTED **5-19-17** DATE COMPLETED **5-22-17** JOB **L-86,754**

ELEVATIONS

GROUND SURFACE **100.6 (565.26)**

END OF BORING **18.1 (482.76)**

Behind North Abutment

WATER LEVEL OBSERVATIONS

WHILE DRILLING **26.0 '**

AT END OF BORING **N/A - wash boring**

24 HOURS

SAMPLE NO.	SAMPLE TYPE	N	WC	Qu	γ_{DRY}	DEPTH	ELEV.	SOIL DESCRIPTIONS
		14						
		18						
17	SS	11	10.2	4.48B				Hard gray sandy CLAY, trace gravel, moist (CL-ML)
		11		4.5+*				
		17						
18	SS	25	9.1	6.46B				
		21		4.5+*				
		29						
						63.0	37.6	
19	SS	12	14.4					Firm to dense brownish-gray clayey SILT, trace to little sand, moist (ML)
		12						
		16						
						68.8	31.8	
20	SS	18						Cobbles and Boulders
		24						
		25						
						72.5	28.1	
21	SS	25	13.4	4.5+*				Hard gray silty CLAY, little to some sand with shale fragments, occasional sand seams, moist (CL)
		43						
		37						
						78.0	22.6	Very dense greenish-gray weathered SHALE and white LIMESTONE fragments, moist to wet (probable weathered bedrock)
22	SS	37	30.3					
		50/2"				81.0	19.6	Hard Drilling - probable weathered bedrock
23	SS	100/0"						

DISTANCE BELOW SURFACE IN FEET: 50, 55, 60, 65, 70, 75, 80, 85, 90, 95, 100

* Approximate unconfined compressive strength based on measurements with a calibrated pocket penetrometer.

B - Bulge-type failure
S - Shear-type failure

Boring cased to 34.5 feet.

Rollerbit refusal at 82.5 feet on probable bedrock.

End of Boring at 82.5'

DRILL RIG NO. **334**

Division lines between deposits represent approximate boundaries between soil types; in-situ, the transition may be gradual.

TSC_EOB 86754.GPJ TSC_ALL.GDT 6/2/17

FILE = S:\PROJECTS\2017\087J17.KCH\DESIGN\CAD_SHEETS\087J17_Boring Logs.dgn

WILLETT HOFMANN & ASSOCIATES INC
ENGINEERING ARCHITECTURE LAND SURVEYING
809 EAST 2ND STREET, DIXON, IL 61021-0367
T: 815-284-3381 DESIGN FIRM: #184-000918

DESIGNED - BKC	REVISED -		
CHECKED - PLP	REVISED -		
DRAWN - RDA	REVISED -		
CHECKED - BKC	REVISED -		

LASALLE & KENDALL COUNTY
FAS 171(CH 3–MILLINGTON RD) OVER FOX RIVER
STATION 20+00

BORING LOGS
STRUCTURE NO. 047-3000

STRUCTURAL SHEET NO. 30 OF 67 SHEETS

FAS RTE.	SECTION	COUNTY	TOTAL SHEETS	SHEET NO.
171	17-00802-00-BR	LASALLE	93	42
	17-00142-00-BR	KENDALL		

WHA# 1087J17 ILLINOIS FED. AID PROJECT WZPE(199) CONTRACT NO. 87683

B.M. - Nail in 36" Elm S.E. of Sta. 0+00
Elev. 100.00
Existing Structure: Steel Truss, 3 Spans @ 147'-9" (Pin to Pin), 16 Ft. Roadway on stone abutments & piers.
Superstructure shall be removed by bridge contractor.
Substructure shall remain in place. (Upper Portion only to be removed)
Salvage: Usable Planks and Steel.

STATE OF ILLINOIS
DEPARTMENT OF PUBLIC WORKS & BUILDINGS
DIVISION OF HIGHWAYS

ROUTE NO.	SECTION	COUNTY	TOTAL SHEETS	SHEET NO.
S. B. I. / F. A.				
FED. ROAD DIST. NO. 7		ILLINOIS	FED. AID PROJECT	

SHEET NO. 1
7 SHEETS

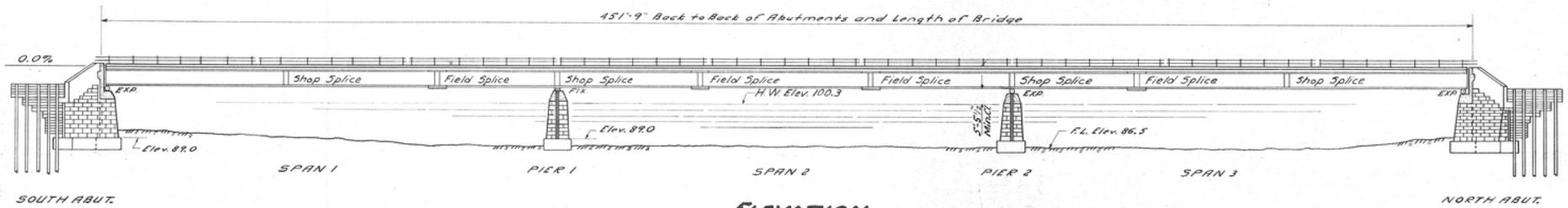

ELEVATION
Scale: 1" = 20'-0"

N

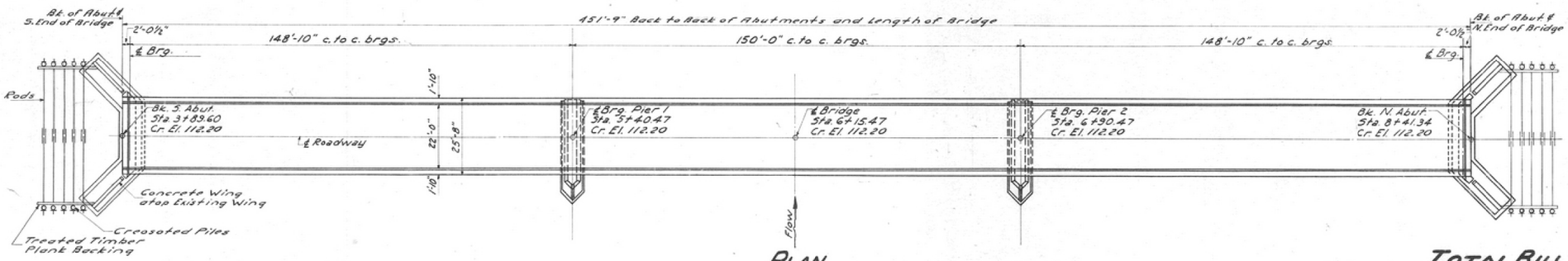

PLAN
Scale: 1" = 20'-0"

GENERAL NOTES

Class X Concrete shall be used thruout.
The concrete floor slab shall be finished in accordance with Article 51.18(a) of the Standard Specifications and shall be poured in one continuous operation between joints.
The curbs and slabs outside of longitudinal construction joints shall be poured monolithically.
No transverse construction joints shall be made in the slab without written permission of the Engineer.
All connections shall be riveted except as noted.
Rivets shall be 3/4" ϕ and open holes 13/16" ϕ except as noted.
All holes for splices shall be sub-punched 11/16" ϕ and reamed to 13/16" ϕ for 3/4" rivets and 15/16" ϕ for 7/8" rivets, with girders assembled in shop in proper position with or without cross frames in place. Matchmark and leave assembled for shop inspection.
All structural steel and metal handrail shall be inspected by the Illinois Division of Highways before painting.
All shoes, bolsters, rockers, bearing plates, lead plates and anchor bolts shall be fabricated and set in accordance with Article 51.14 of Standard Specifications and are included for payment as Structural Steel. Estimated Weight = 1,394.50 Lbs.
Metal handrail and structural steel shall receive one shop coat of red lead paint and two field coats of aluminum paint. See Articles 57.1 to 57.5 of the Standard Specifications.
All paint shall be furnished and applied by the contractors involved.
Anchor bolts shall be set before riveting cross frames over piers and abutments.
Contractor for Section "F" shall contact the Engineer for actual field dimensions before fabricating structural steel.
Welding shall comply with Article 55.1(G) of the Standard Specifications.
The Contractor shall drive one test pile at each abutment as directed by the Engineer before ordering remainder of piles.

TOTAL BILL OF MATERIAL - SECTION B

ITEM	UNIT	SUPER.	SUB.	TOTAL
Class X Concrete	Cu. Yds.	310.7	105.0	415.7
Reinforcement Bars	Lbs.	55180	5950	61130
Erecting Structural Steel	Lbs.	670760		670760
Erecting Metal Handrail	Lin. Ft.	906		906
Name Plates	Each	1		1
Masonry Removal	Cu. Yds.		130.0	130.0
Expansion Bolts 7/8" ϕ	Each		66	66
Hardware	Lbs.		1670	1670
Treated Timber	Ft. B.M.		2480	2480
Creosoted Piles (20.1' to 38')	Lin. Ft.		600	600
Test Piles	Each		2	2
Removal of Existing Superstructure	Each		1	1
Class A Excavation for Structures	Cu. Yds.			116

TOTAL BILL OF MATERIAL - SECTION F

Furnishing Structural Steel	Lbs.	670750		670750
Furnishing Metal Handrail	Lin. Ft.	906		906

WATERWAY INFORMATION

Drainage Area ---------- 1,339,520 Acres
Character Level, Wooded, Cultivated & Swampy
Required Opening (15 yr. Flood) 3585 sq. ft.
Present Opening ---------- 5180 sq. ft.
Proposed Opening ---------- 5180 sq. ft.

DESIGN STRESSES

f_c = 1400 p.s.i. Superstructure
f_c = 800 p.s.i. Substructure
f_s = 20000 p.s.i. Reinforcement
f_s = 18000 p.s.i. Structural
n = 10

MILLINGTON BRIDGE
FOX RIVER
BUILT 195 BY
LASALLE-KENDALL COUNTIES
LOADING H15-S12

LETTERING FOR NAME PLATE
See Std. 2113

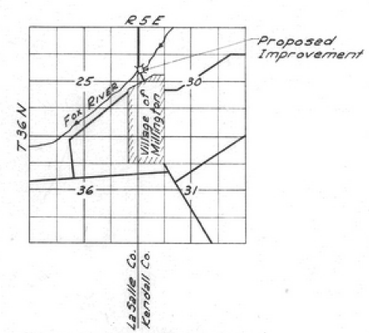

LOCATION SKETCH

FOR INFORMATION ONLY

LOADING H15-S12-44

DESIGNED	Joseph J. Rimsay
CHECKED	J.J. Rimsay & SAMI ALPER
DRAWN	J.J.R. & H.P. Wadler J. Ganci
CHECKED	J.J.R. & S.A.

MAY 6 1957
EXAMINED — ENGINEER OF BRIDGE AND TRAFFIC STRUCTURES
PASSED — ENGINEER OF DESIGN
APPROVED — CHIEF HIGHWAY ENGINEER

REV. 4-2-57 JJR

GENERAL PLAN & ELEVATION
MILLINGTON BRIDGE
OVER FOX RIVER
LASALLE - KENDALL COUNTIES
STATION 6+15.47
SECTION B-[redacted]
BRIDGE NO. 3000

MILLINGTON ROAD

FILE = S:\PROJECTS\2017\1087J17_KCH\DESIGN\CAD_SHEETS\1087J17_1957 Existing Plans.dgn

WILLETT HOFMANN & ASSOCIATES INC
ENGINEERING ARCHITECTURE LAND SURVEYING
809 EAST 2ND STREET, DIXON, IL 61021-0367
T: 815-284-3381 DESIGN FIRM: #184-000918

DESIGNED - BKC	REVISED -	LASALLE & KENDALL COUNTY	1957 EXISTING PLANS
CHECKED - PLP	REVISED -	FAS 171(CH 3–MILLINGTON RD) OVER FOX RIVER	STRUCTURE NO. 074-3000
DRAWN - FDL	REVISED -	STATION 20+00	STRUCTURAL SHEET NO. 31 OF 67 SHEETS
CHECKED - BKC	REVISED -		

FAS RTE.	SECTION	COUNTY	TOTAL SHEETS	SHEET NO.
171	17-00802-00-BR	LASALLE	93	43
	17-00142-00-BR	KENDALL		

WHA# 1087J17 | ILLINOIS | FED. AID PROJECT WZPE(199) | CONTRACT NO. 87683

STATE OF ILLINOIS
DEPARTMENT OF PUBLIC WORKS & BUILDINGS
DIVISION OF HIGHWAYS

ROUTE NO.	SECTION	COUNTY	TOTAL SHEETS	SHEET NO.
S. B. I.				
F. A.				
FED. ROAD DIST. NO. 7		ILLINOIS	FED. AID PROJECT	

SHEET NO. 2
9 SHEETS

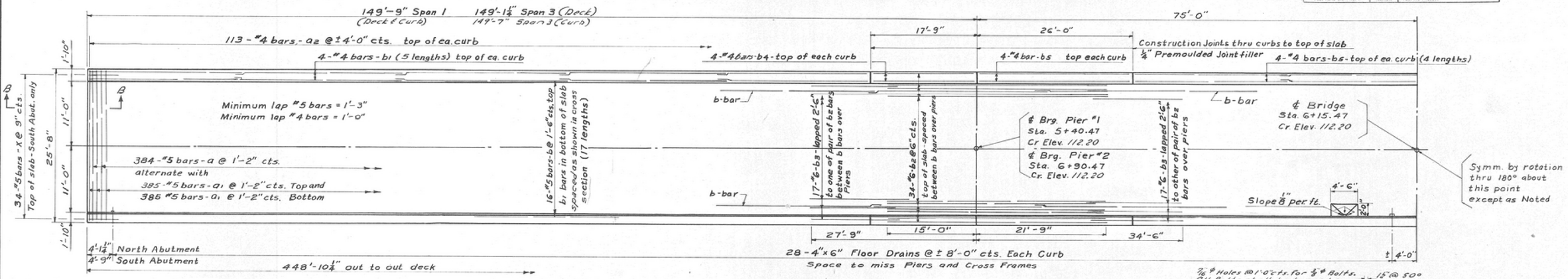

NOTE: - For sections thru end of slab @ Abutments
See Sec. B-B Sheet 5 - N. Abutment
See Sec. B-B This Sheet - S. Abutment

HALF PLAN - SUPERSTRUCTURE

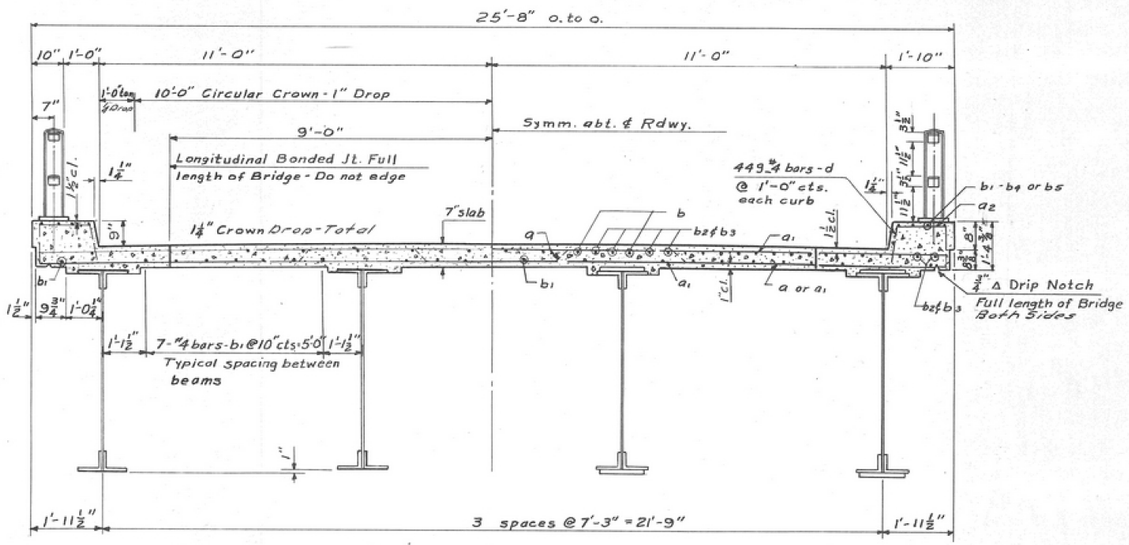

NEAR ABUTS. OVER PIERS

CROSS SECTION

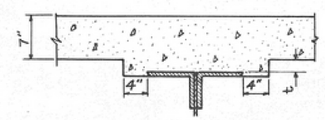

DETAIL OF FILLET

METHOD OF DETERMINING FILLET HEIGHT "t"
Fillet Height "t" = 1¼" uniform plus the difference between shop camber chord and theoretical camber, curve as shown in camber diagram bottom of Sheet No. 3.

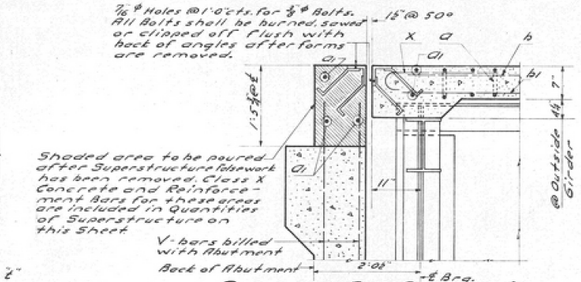

SECTION B-B (S. ABUT.)

For details of Expansion Devices @ Each Abutment See Sheet # 5

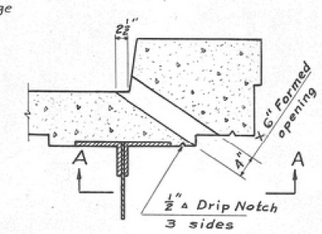

FLOOR DRAIN DETAIL

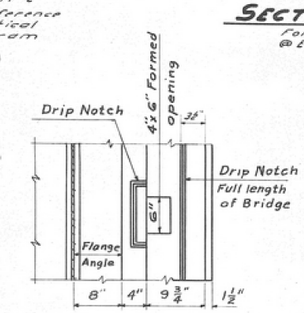

SECTION A-A

BILL OF MATERIAL
SUPERSTRUCTURE

BAR	No.	SIZE	LENGTH	SHAPE
a	384	# 5	28'-0"	
a1	776	# 5	25'-0"	
a2	226	# 4	1'-6"	
b	272	# 5	27'-7"	
b1	471	# 4	27'-4"	
b2	68	# 6	36'-9"	
b3	68	# 6	15'-3"	
b4	16	# 4	17'-6"	
b5	48	# 4	25'-9"	
d	898	# 4	1'-0"	
X	34	# 5	4'-3"	
Class X Concrete			Cu. Yds.	310.7
Reinforcement Bars			Lbs.	55180
*Structural Steel			Lbs.	670750
Name Plate			Each	1

* Includes weight of Bearing Assemblies and expansion devices

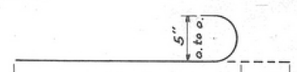

BAR X

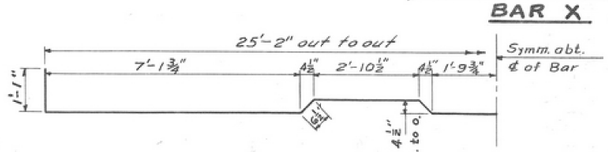

BAR a

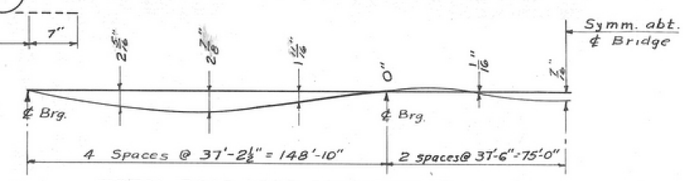

TOTAL DEAD LOAD DEFLECTION DIAGRAM

The Dead Load Deflection Diagram is given as a matter of record only. Procedure for utilizing this data in shop and field is given in camber diagram on sheet #3

FOR INFORMATION ONLY

DESIGNED	Harold P. Wendler
CHECKED	Joseph J. Rimsay
DRAWN	J.P. Cummings H.P.W.
CHECKED	J.J.R.

MAY 6, 1957
EXAMINED — ENGINEER OF BRIDGE AND TRAFFIC STRUCTURES
PASSED — ENGINEER OF DESIGN
APPROVED — CHIEF HIGHWAY ENGINEER

DECK PLAN

MILLINGTON BRIDGE
OVER FOX RIVER
LA SALLE - KENDALL COUNTIES
STATION 6+15.47
SECTION B-B
BRIDGE NO. 3000

WILLETT HOFMANN & ASSOCIATES INC
ENGINEERING ARCHITECTURE LAND SURVEYING
809 EAST 2ND STREET, DIXON, IL 61021-0367
T: 815-284-3381 DESIGN FIRM: #184-000918

DESIGNED - BKC	REVISED -		
CHECKED - PLP	REVISED -		
DRAWN - FDL	REVISED -		
CHECKED - BKC	REVISED -		

LASALLE & KENDALL COUNTY
FAS 171(CH 3–MILLINGTON RD) OVER FOX RIVER
STATION 20+00

1957 EXISTING PLANS
STRUCTURE NO. 074-3000
STRUCTURAL SHEET NO. 32 OF 67 SHEETS

FAS RTE.	SECTION	COUNTY	TOTAL SHEETS	SHEET NO.
171	17-00802-00-BR	LASALLE	93	44
	17-00142-00-BR	KENDALL		

WHA* 1087J17 ILLINOIS FED. AID PROJECT WZPE(199) CONTRACT NO. 87683

FILE = S:\PROJECTS\2017\1087J17_KC\DESIGN\CAD_SHEETS\1087J17_1957 Existing Plans.dgn

STATE OF ILLINOIS
DEPARTMENT OF PUBLIC WORKS & BUILDINGS
DIVISION OF HIGHWAYS

BOND ISSUE ROUTE NO.	SECTION	COUNTY	TOTAL SHEETS	SHEET NO.
FED. ROAD DIST. NO. 7	ILLINOIS	FED. AID PROJECT-		

SHEET NO. 3
9 SHEETS

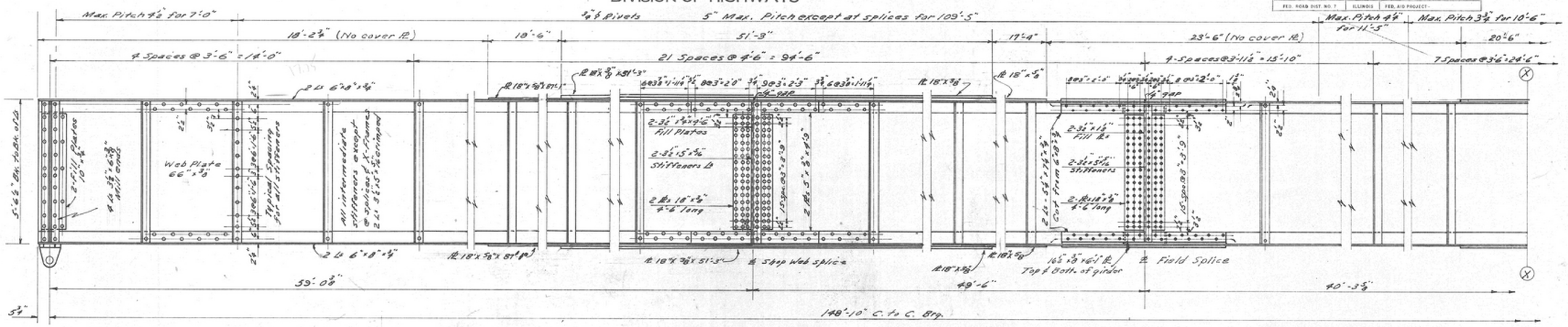

ELEVATION

5" Maximum Pitch ¾" ϕ Rivets

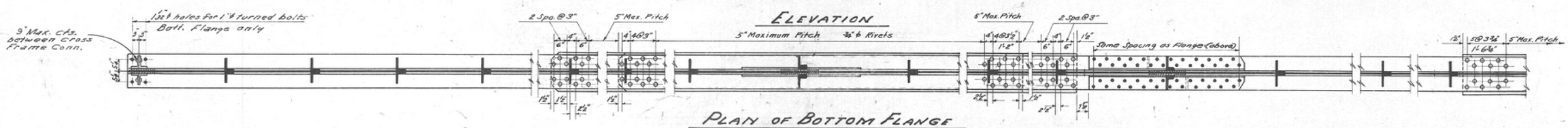

PLAN OF BOTTOM FLANGE
(Top Flange Similar)

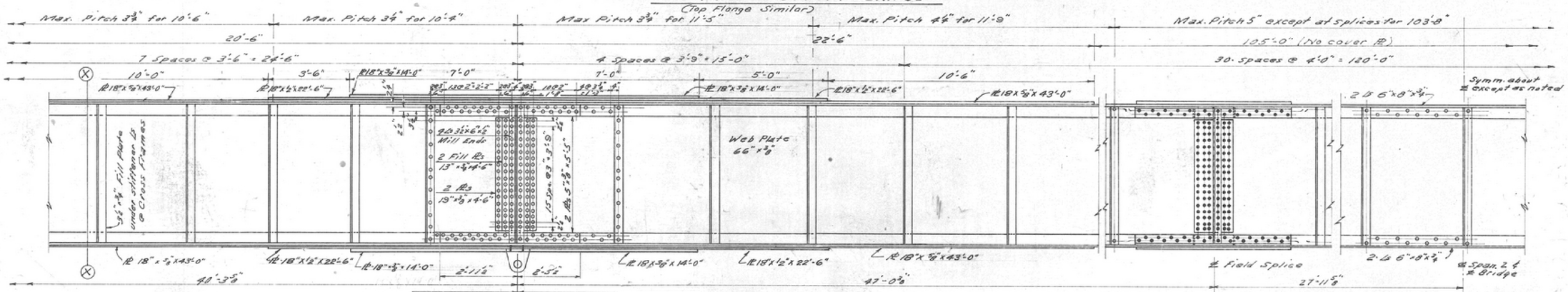

ELEVATION

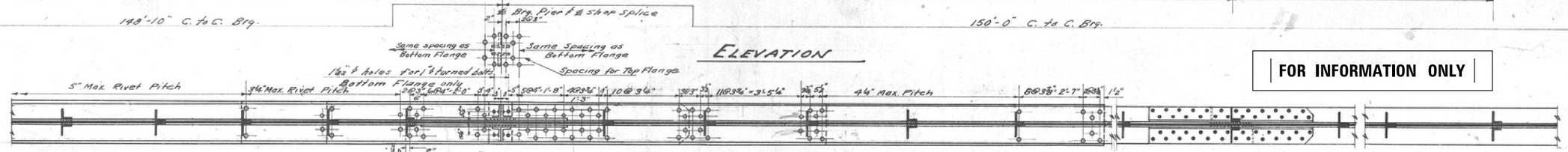

PLAN OF BOTTOM FLANGE

Top Flange similar except as noted.

Camber girders in shop in accordance with dashed lines shown in diagram. Camber bottom of slab in field as shown by solid line labeled Theoretical Camber Curve with shop camber as chord. The control points at bearings and splices will then follow grade line after D.L. occurs & deflections are calculated on the following basis for one girder:

Concrete & future F.W. Super - 800# lin. ft.
Structural Steel - - - 350# lin. ft.
Total D.L. per girder - - 1150# lin. ft.

Note: All Field splices are alike
All shop splices at piers are alike
All shop splices in end spans are alike

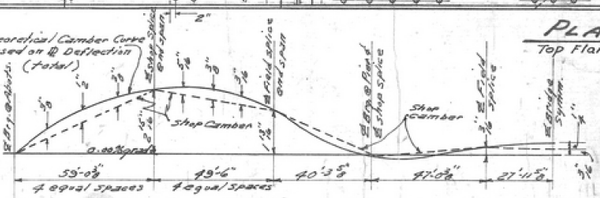

CAMBER DIAGRAM

FOR INFORMATION ONLY

COMPUTED	Joseph J. Ramsey	
CHECKED	Lami Olgo	
DRAWN	J.J.R.	Pano
CHECKED	S.A.	

EXAMINED MAY 6, 1957
ENGINEER BRIDGE AND TRAFFIC STRUCTURES
PASSED E. L. Sturdi
ENGINEER OF DESIGN
APPROVED B. B. Bartelsmeyer
CHIEF HIGHWAY ENGINEER

GIRDER DETAILS
MILLINGTON BRIDGE
OVER FOX RIVER
LA SALLE-KENDALL Co's.
STATION 6+15.47
SECTION B-

WILLETT HOFMANN & ASSOCIATES INC
ENGINEERING ARCHITECTURE LAND SURVEYING
809 EAST 2ND STREET, DIXON, IL 61021-0367
T: 815-284-3381 DESIGN FIRM: #184-000918

DESIGNED - BKC	REVISED -		
CHECKED - PLP	REVISED -		
DRAWN - FDL	REVISED -		
CHECKED - BKC	REVISED -		

LASALLE & KENDALL COUNTY
FAS 171(CH 3–MILLINGTON RD) OVER FOX RIVER
STATION 20+00

1957 EXISTING PLANS
STRUCTURE NO. 074-3000
STRUCTURAL SHEET NO. 33 OF 67 SHEETS

FAS RTE.	SECTION	COUNTY	TOTAL SHEETS	SHEET NO.
171	17-00802-00-BR	LASALLE	93	45
	17-00142-00-BR	KENDALL		

WHA* 1087J17 ILLINOIS FED. AID PROJECT WZPE(199) CONTRACT NO. 87683

FILE = S:\PROJECTS\2017\1087J17_KC\DESIGN\CAD_SHEETS\1087J17_1957 Existing Plans.dgn

STATE OF ILLINOIS
DEPARTMENT OF PUBLIC WORKS & BUILDINGS
DIVISION OF HIGHWAYS

BOND ISSUE ROUTE NO.	SECTION	COUNTY	TOTAL SHEETS	SHEET NO.
FED. ROAD DIST. NO. 7		ILLINOIS	FED. AID PROJECT -	

SHEET NO. 4
7 SHEETS

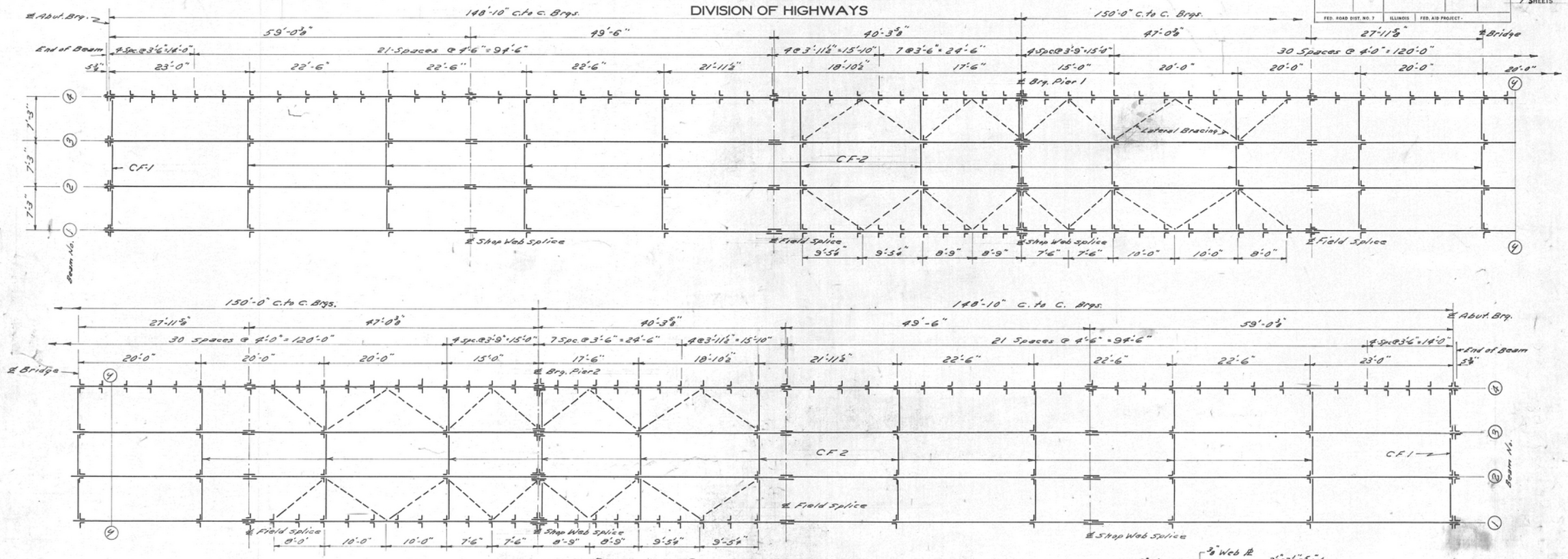

PLAN OF STRUCTURAL STEEL

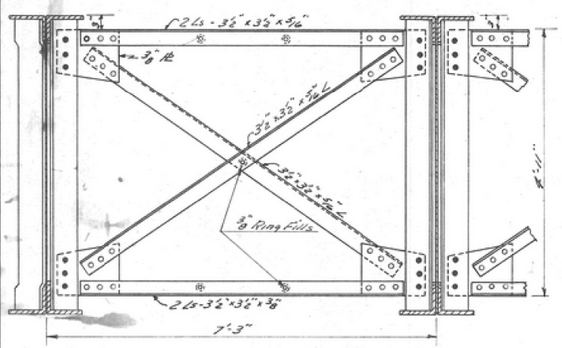

CF2

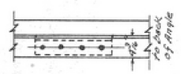

SECTION A-A

TABLE OF "A" DIMENSIONS

Beam No.	1	2	3	4
"A"	3"	4"	4"	3"

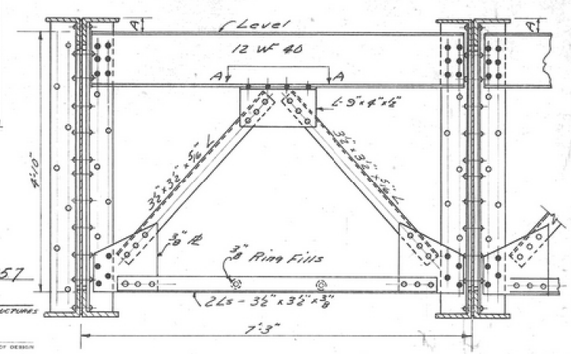

CF1

FOR INFORMATION ONLY

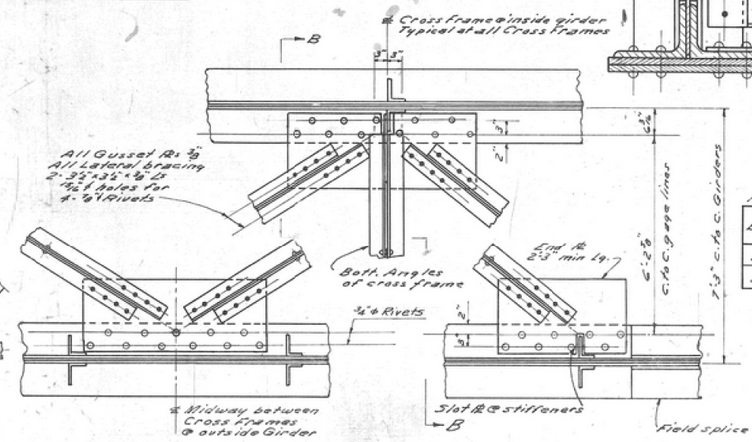

PLAN DETAILS OF LATERAL BRACING

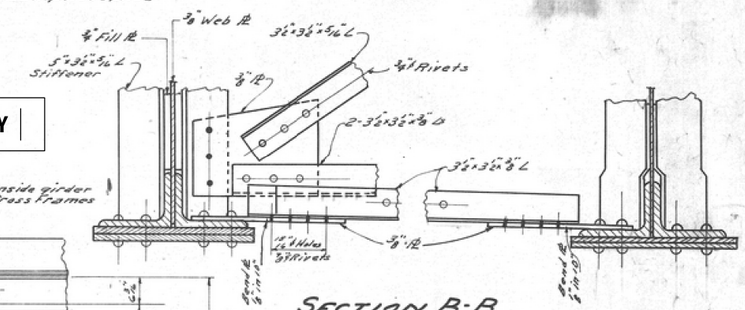

SECTION B-B

ELEVATIONS TOP OF FLANGE ANGLES
At time of Erection Prior to Deflection (see Camber Diagram SK-3)

Beams	At ℄ Brgs. Both Abuts. Both Piers	At ℄ Shop Splice in End Spans	At ℄ Field Splice in End Spans	At Both Field Splices Center Span
1 & 4	111.414	111.658	111.564	111.429
2 & 3	111.497	111.741	111.647	111.512

STRUCTURAL STEEL DETAILS

MILLINGTON BRIDGE
OVER FOX RIVER
LA SALLE - KENDALL COUNTIES
STATION 6+15.47

SECTION B-B

BRIDGE NO. 3000

COMPUTED	H.P. Wendler & J.J. Rimsay
CHECKED	J.J.R. & Sami Alper
DRAWN	H.P.W. & J.J.R. Fano
CHECKED	S. Alper

EXAMINED MAY 6 1957
W. M. Romine
ENGINEER OF BRIDGE AND TRAFFIC STRUCTURES
PASSED
ENGINEER OF DESIGN
APPROVED B. A. Bartelsmeyer
CHIEF HIGHWAY ENGINEER

DATE REV. 8-6-57

FILE = S:\PROJECTS\2017\1087J17_KC\DESIGN\CAD_SHEETS\1087J17_1957 Existing Plans.dgn

WILLETT HOFMANN & ASSOCIATES INC
ENGINEERING ARCHITECTURE LAND SURVEYING
809 EAST 2ND STREET, DIXON, IL 61021-0367
T: 815-284-3381 DESIGN FIRM: #184-000918

DESIGNED - BKC	REVISED -		
CHECKED - PLP	REVISED -		
DRAWN - FDL	REVISED -		
CHECKED - BKC	REVISED -		

LASALLE & KENDALL COUNTY
FAS 171(CH 3–MILLINGTON RD) OVER FOX RIVER
STATION 20+00

1957 EXISTING PLANS
STRUCTURE NO. 074-3000
STRUCTURAL SHEET NO. 34 OF 67 SHEETS

FAS RTE.	SECTION	COUNTY	TOTAL SHEETS	SHEET NO.
171	17-00802-00-BR	LASALLE	93	46
	17-00142-00-BR	KENDALL		

WHA# 1087J17 ILLINOIS FED. AID PROJECT WZPE(199) CONTRACT NO. 87683

STATE OF ILLINOIS
DEPARTMENT OF PUBLIC WORKS & BUILDINGS
DIVISION OF HIGHWAYS

BOND ISSUE ROUTE NO.	SECTION	COUNTY	TOTAL SHEETS	SHEET NO.
FED. ROAD DIST. NO. 7	ILLINOIS	FED. AID PROJECT -		

SHEET NO. 5
9 SHEETS

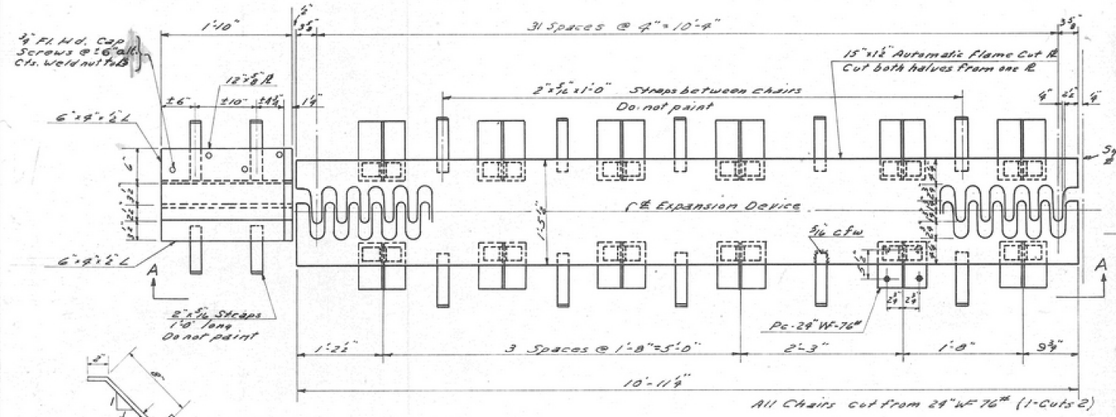

STRAP DETAIL

PLAN OF EXPANSION DEVICE AT N. ABUTMENT

Openings between Expansion plates are shown for a normal temperature of 50°F.

Estimated Weight Complete 3270 Lbs.

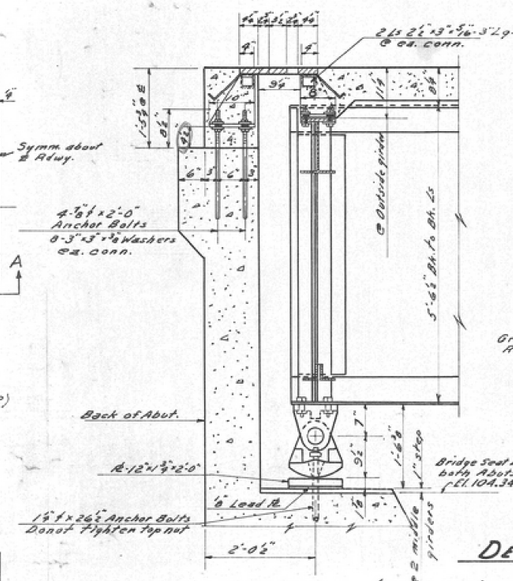

SECTION B-B (N. ABUT.)

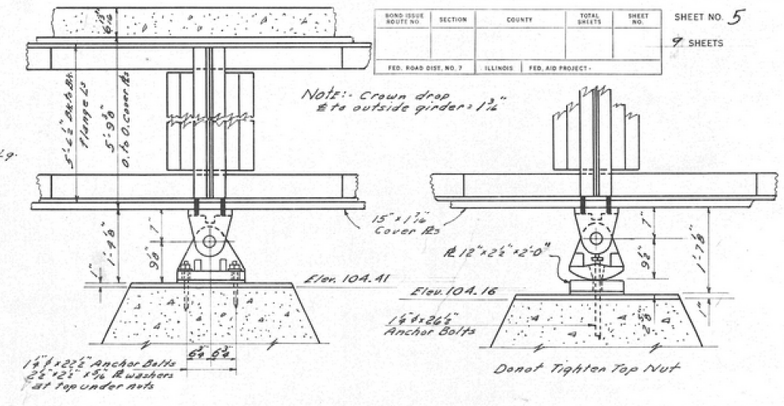

SECTION AT PIER 1

SECTION AT PIER 2

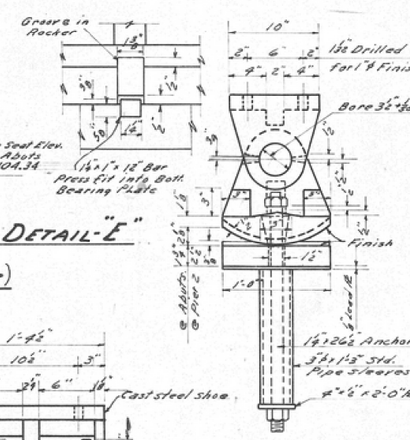

DETAIL-"E"

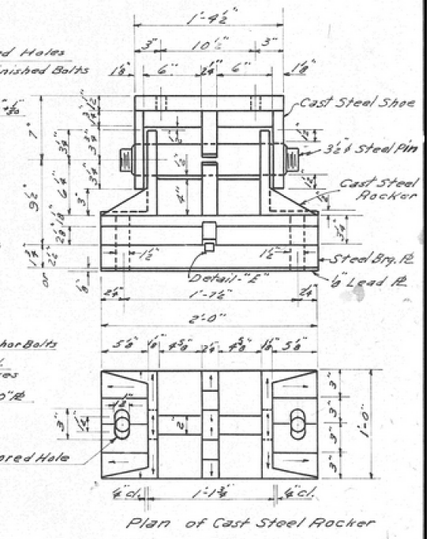

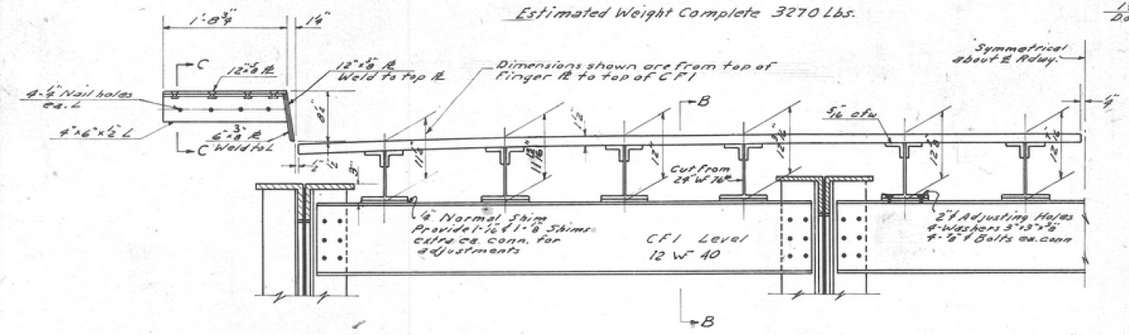

SECTION A-A

FOR INFORMATION ONLY

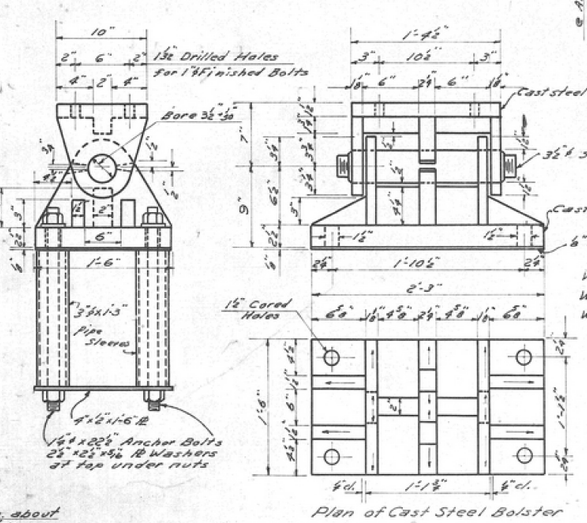

DETAIL OF EXPANSION BEARING

Weight of Cast Steel Upper Shoe 154 Lbs. - 16 Required
Weight " " " Exp. Rocker 383 Lbs - 12 "
Weight " " " Fixed Bolster 520 Lbs. - 4 "

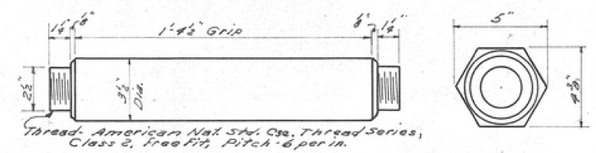

STANDARD PIN & RECESSED NUT

16 Pins, 2 Pilot Nuts, 32 Driving Nuts - Required

Note:
The top sidewalk plate shall be seam welded to side plate only and the assembly shall not be attached until the forms are removed.

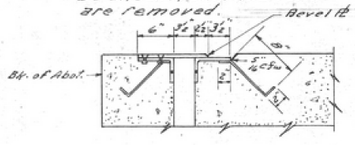

SECTION C-C

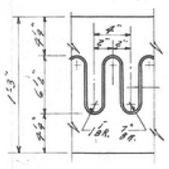

DETAIL OF EXPANSION Pl.

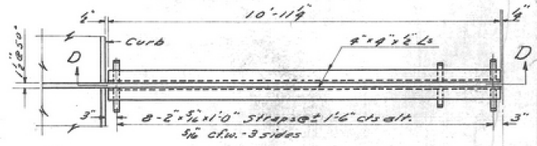

PLAN OF EXPANSION DEVICE AT S. ABUT.

Estimated Weight Complete - 630 Lbs.

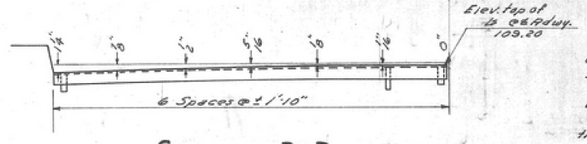

SECTION D-D

For Vertical Section thru Expansion Device @ S. Abut. - See Sec. B-B Sheet 2

DETAIL OF FIXED BEARING

NOTE:

Copper bearing steel (A.S.T.M. designation A-7 with 0.2% copper added shall be used in the Expansion Guard at North Abut. The roadway expansion plate shall be fabricated and erected in accordance with Art. 51.12(d) of the Std. Specs.

Roadway expansion guards shall be assembled in the shop in proper position with adjacent ends in place and shall be left assembled for shop inspection.

The 1½" finger plates shall be flame cut as provided in Art. 55.4 (d) of the Std. Specifications. All surfaces shall receive two shop coats of red lead paint except the 2" anchor straps and ⅞" ϕ Anchor Bolts which shall not be painted.

Estimated Weight, the sum of both expansion devices Complete is 3900 Lbs. and is included For payment as Structural Steel sheets 1 & 2.

COMPUTED	Joseph J. Rimsay	
CHECKED	Sami Alper	
DRAWN	J. J. Rimsay	Fano
CHECKED	Sami Alper	

EXAMINED MAY 6 1957
ENGINEER OF BRIDGE AND TRAFFIC STRUCTURES
PASSED
ENGINEER OF DESIGN
APPROVED
CHIEF HIGHWAY ENGINEER

DATE REV. 6-6-67

EXPANSION DEVICES AND BEARING DETAILS
MILLINGTON BRIDGE OVER FOX RIVER
LA SALLE - KENDALL Co's.
STATION 6+15.47
SECTION B

WILLETT HOFMANN & ASSOCIATES, INC
ENGINEERING ARCHITECTURE LAND SURVEYING
809 EAST 2ND STREET, DIXON, IL 61021-0367
T: 815-284-3381 DESIGN FIRM: #184-000918

DESIGNED - BKC	REVISED -		
CHECKED - PLP	REVISED -		
DRAWN - FDL	REVISED -		
CHECKED - BKC	REVISED -		

LASALLE & KENDALL COUNTY
FAS 171(CH 3–MILLINGTON RD) OVER FOX RIVER
STATION 20+00

1957 EXISTING PLANS
STRUCTURE NO. 074-3000

STRUCTURAL SHEET NO. 35 OF 67 SHEETS

FAS RTE.	SECTION	COUNTY	TOTAL SHEETS	SHEET NO.
171	17-00802-00-BR	LASALLE	93	47
	17-00142-00-BR	KENDALL		

WHA# 1087J17 | ILLINOIS | FED. AID PROJECT WZPE(199) | CONTRACT NO. 87683

FILE = S:\PROJECTS\2017\1087J17_KCH\DESIGN\CAD_SHEETS\1087J17_1957 Existing Plans.dgn

STATE OF ILLINOIS
DEPARTMENT OF PUBLIC WORKS & BUILDINGS
DIVISION OF HIGHWAYS

ROUTE NO.	SECTION	COUNTY	TOTAL SHEETS	SHEET NO.
S. B. I. / F. A.				
FED. ROAD DIST. NO. 7		ILLINOIS	FED. AID PROJECT-	

SHEET NO. 6
9 SHEETS

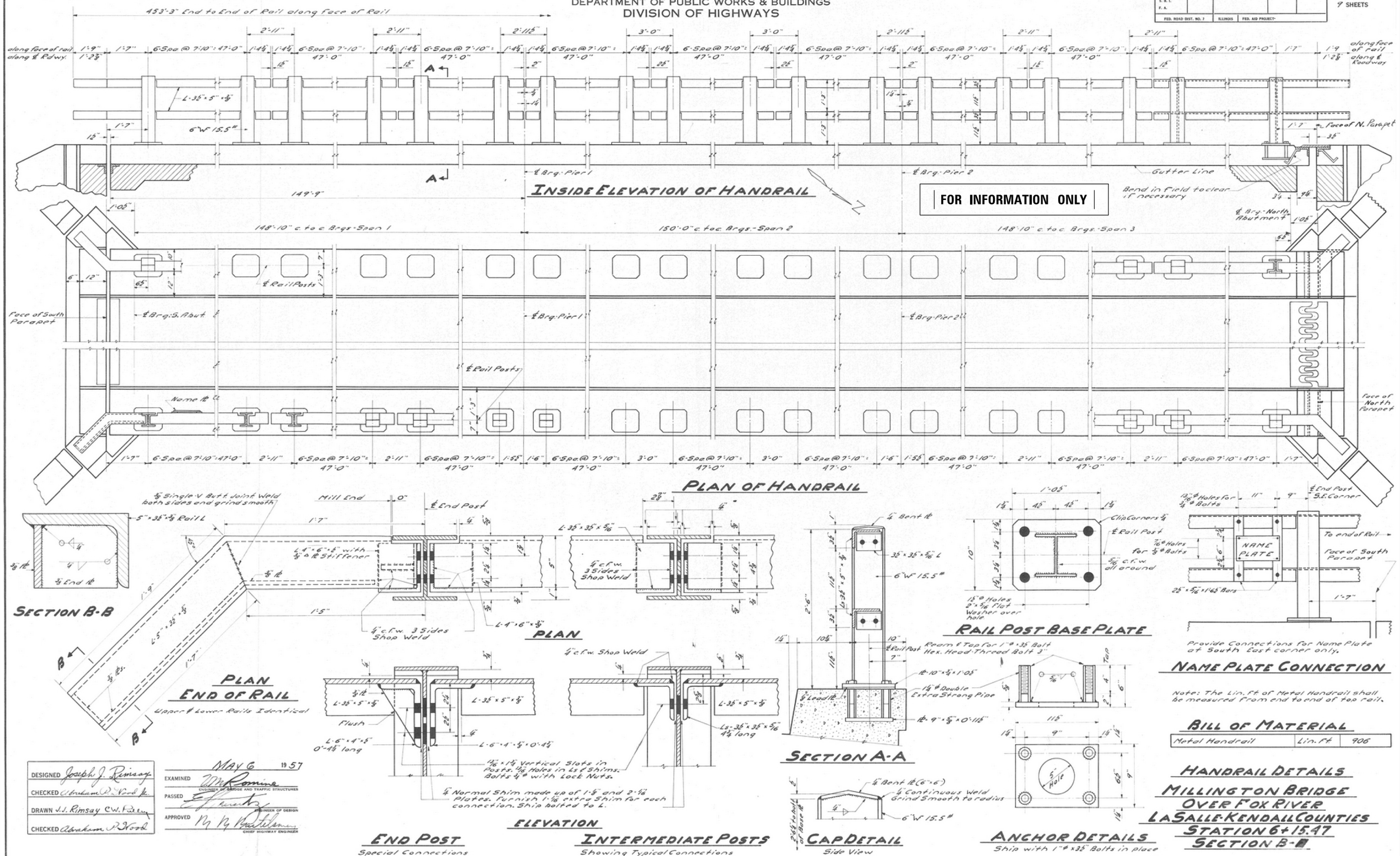

Note: The Lin. Ft. of Metal Handrail shall be measured from end to end of top rail.

BILL OF MATERIAL

Metal Handrail	Lin. Ft.	906

HANDRAIL DETAILS
MILLINGTON BRIDGE OVER FOX RIVER
LaSALLE-KENDALL COUNTIES
STATION 6+15.47
SECTION B-B

DESIGNED	Joseph J. Rimsay	EXAMINED	MAY 6 1957 — M. Romine, Engineer of Bridge and Traffic Structures
CHECKED	Abraham P. Noot Jr.	PASSED	E. Turnbull, Engineer of Design
DRAWN	J.J. Rimsay C.W. Fiery	APPROVED	M. R. Pautsch, Chief Highway Engineer
CHECKED	Abraham P. Noot		

WILLETT HOFMANN & ASSOCIATES INC
ENGINEERING ARCHITECTURE LAND SURVEYING
809 EAST 2ND STREET, DIXON, IL 61021-0367
T: 815-284-3381 DESIGN FIRM: #184-000918

DESIGNED - BKC	REVISED -		
CHECKED - PLP	REVISED -		
DRAWN - FDL	REVISED -		
CHECKED - BKC	REVISED -		

LASALLE & KENDALL COUNTY
FAS 171(CH 3–MILLINGTON RD) OVER FOX RIVER
STATION 20+00

1957 EXISTING PLANS
STRUCTURE NO. 074-3000
STRUCTURAL SHEET NO. 36 OF 67 SHEETS

FAS RTE.	SECTION	COUNTY	TOTAL SHEETS	SHEET NO.
171	17-00802-00-BR	LASALLE	93	48
	17-00142-00-BR	KENDALL		

WHA* 1087J17 | ILLINOIS | FED. AID PROJECT WZPE(199) | CONTRACT NO. 87683

FILE = S:\PROJECTS\2017\1087J17_KCH\DESIGN\CAD_SHEETS\1087J17-1957 Existing Plans.dgn

NOTE :- Remove that portion of existing Abutments above Elev. ± 101.59 that is necessary for proposed construction. This work shall be paid for per Cu. Yd. as Masonry Removal. 30.7 Cu. Yd. per abutment estimated.

Exposed Masonry joints shall be raked clean of all loose material and shall be tuck pointed. Cost shall be incidental to the Contract.

STATE OF ILLINOIS
DEPARTMENT OF PUBLIC WORKS & BUILDINGS
DIVISION OF HIGHWAYS

Note:- At North Abutment, the spacing of V bars may be varied to accomodate Expansion device.

FAS RTE.	SECTION	COUNTY	TOTAL SHEETS	SHEET NO.
0.0.2 R.R.				
FED. ROAD DIST. NO. 7	ILLINOIS	FED. AID PROJ.		

SHEET NO 7
9 SHEETS

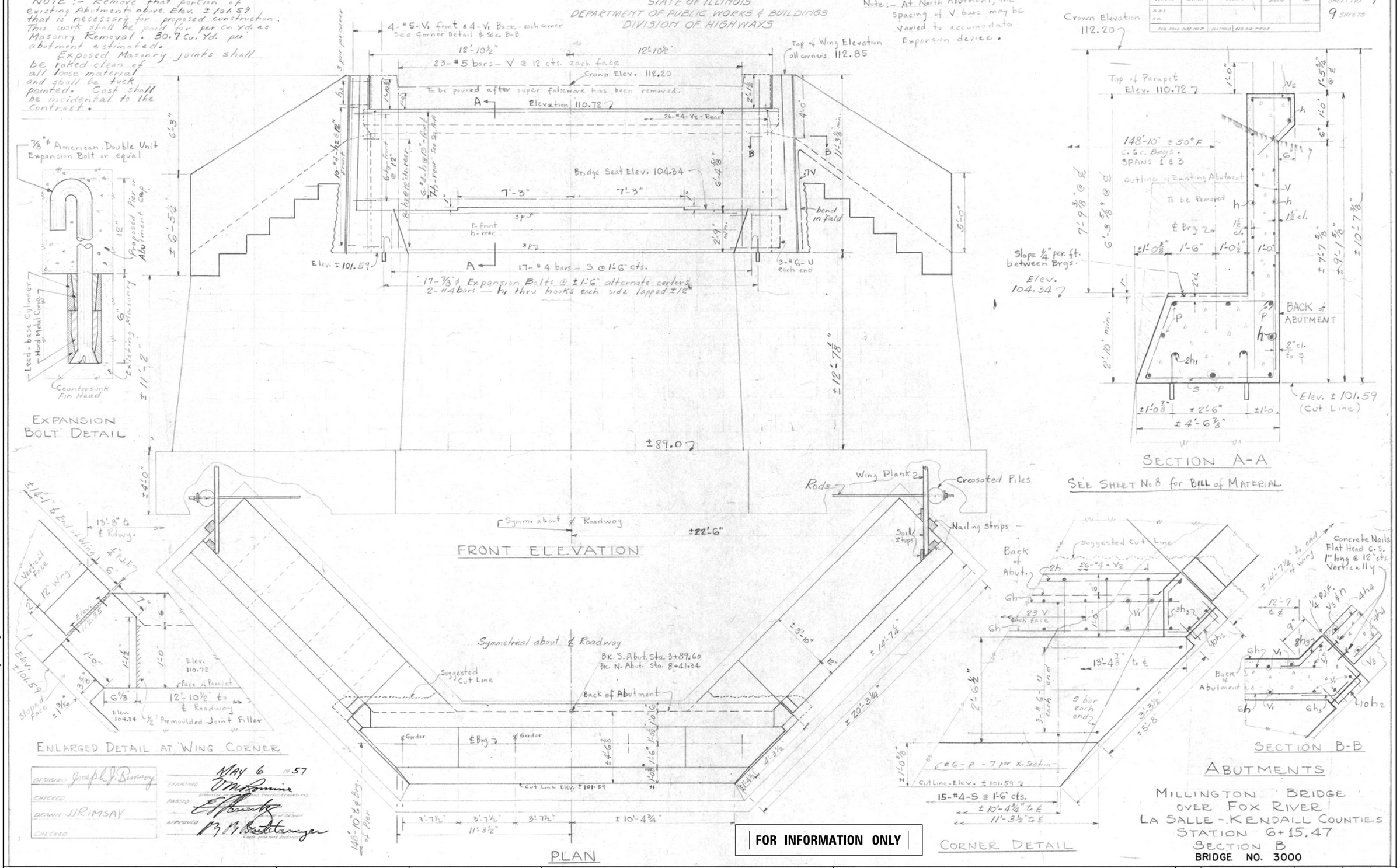

DESIGNED Joseph J. Ramsay
CHECKED
DRAWN J.R. IMSAY
CHECKED

MAY 6 1957
EXAMINED
PASSED
APPROVED

FOR INFORMATION ONLY

MILLINGTON BRIDGE
OVER FOX RIVER
LA SALLE - KENDALL COUNTIES
STATION 6+15.47
SECTION B
BRIDGE NO. 3000

WILLETT HOFMANN & ASSOCIATES INC
ENGINEERING ARCHITECTURE LAND SURVEYING
809 EAST 2ND STREET, DIXON, IL 61021-0367
T: 815-284-3381 DESIGN FIRM: #184-000918

DESIGNED - BKC	REVISED -	LASALLE & KENDALL COUNTY FAS 171(CH 3–MILLINGTON RD) OVER FOX RIVER STATION 20+00	1957 EXISTING PLANS STRUCTURE NO. 074-3000
CHECKED - PLP	REVISED -		
DRAWN - FDL	REVISED -		
CHECKED - BKC	REVISED -		STRUCTURAL SHEET NO. 37 OF 67 SHEETS

FAS RTE.	SECTION	COUNTY	TOTAL SHEETS	SHEET NO.
171	17-00802-00-BR	LASALLE	93	49
	17-00142-00-BR	KENDALL		
WHA# 1087J17	ILLINOIS	FED. AID PROJECT WZPE(199)	CONTRACT NO. 87683	

FILE = S:\PROJECTS\2017\1087J17_KC\DESIGN\CAD_SHEETS\1087J17_1957 Existing Plans.dgn

STATE OF ILLINOIS
DEPARTMENT OF PUBLIC WORKS & BUILDINGS
DIVISION OF HIGHWAYS

ROUTE NO.	SECTION	COUNTY	TOTAL SHEETS	SHEET NO.
O.B.I. F.A.				
F.A.P. RURD. DIST. NO. 7		ILLINOIS	FED. AID PROJ.	

SHEET NO 8
9 SHEETS

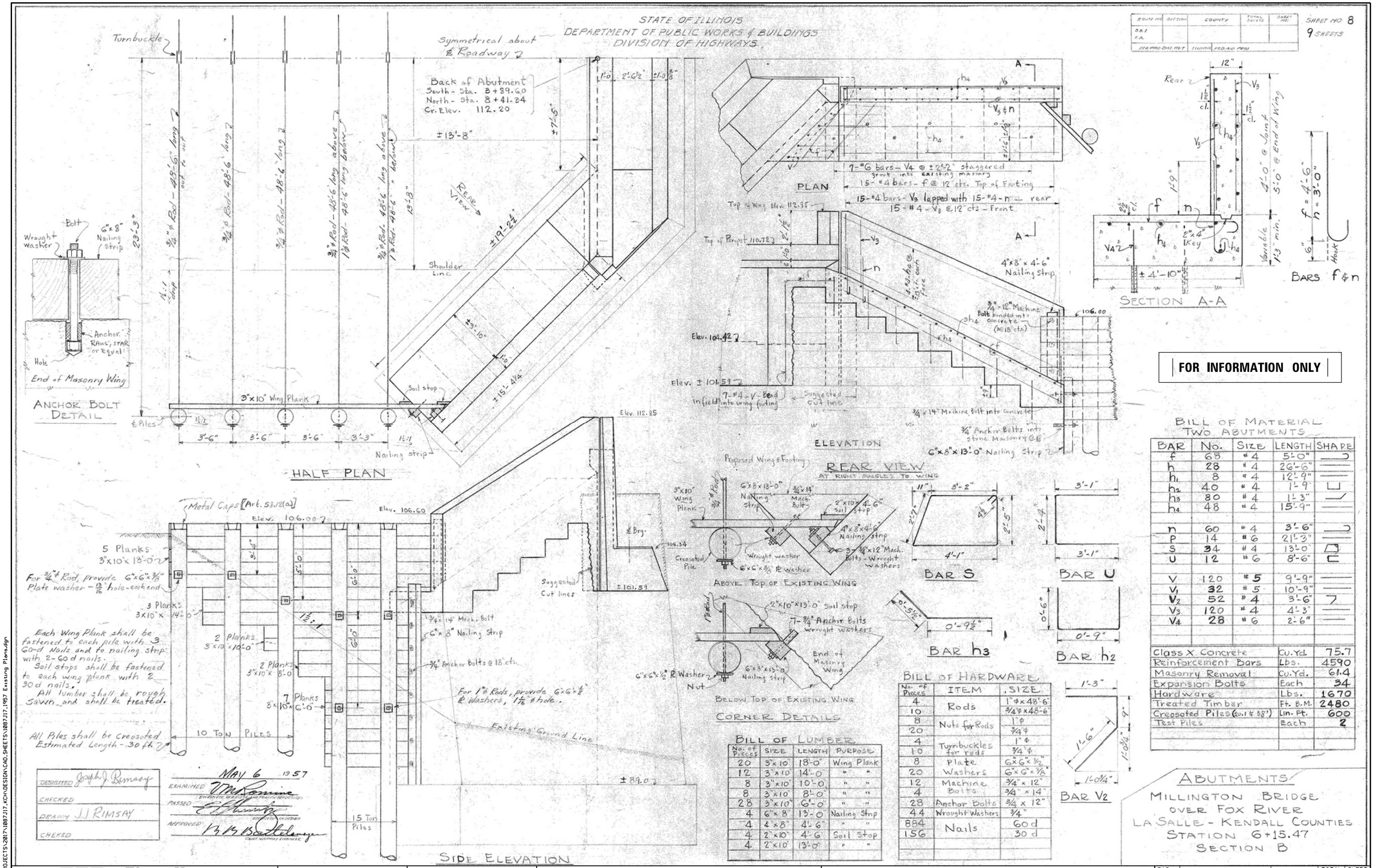

FOR INFORMATION ONLY

BILL OF MATERIAL
TWO ABUTMENTS

BAR	No.	SIZE	LENGTH	SHAPE
f	68	#4	5'-0"	
h	28	#4	26'-6"	
h1	8	#4	12'-9"	
h2	40	#4	1'-9"	
h3	80	#4	1'-3"	
h4	48	#4	15'-9"	
n	60	#4	3'-6"	
p	14	#6	21'-3"	
s	34	#4	13'-0"	
u	12	#6	8'-6"	
V	120	#5	9'-9"	
V1	32	#5	10'-9"	
V2	52	#4	3'-6"	
V3	120	#4	4'-3"	
V4	28	#6	2'-6"	

Class X Concrete	Cu. Yd.	75.7
Reinforcement Bars	Lbs.	4590
Masonry Removal	Cu. Yd.	61.4
Expansion Bolts	Each	34
Hardware	Lbs.	1670
Treated Timber	Ft. B.M.	2480
Creosoted Piles (av. 1 @ 38')	Lin. Ft.	600
Test Piles	Each	2

BILL OF LUMBER

No. of Pieces	SIZE	LENGTH	PURPOSE
20	3"x10"	18'-0"	Wing Plank
12	3"x10"	14'-0"	" "
8	3"x10"	10'-0"	" "
8	3"x10"	8'-0"	" "
28	3"x10"	6'-0"	" "
4	6"x8"	13'-0"	Nailing Strip
4	4"x8"	4'-6"	" "
4	2"x10"	4'-6"	Soil Stop
4	2"x10"	13'-0"	" "

BILL OF HARDWARE

No. of Pieces	ITEM	SIZE
4	Rods	1"ϕ x 48'-6"
10		¾"ϕ x 48'-6"
8	Nuts for Rods	1"ϕ
20		¾"ϕ
4	Turnbuckles for rods	1"ϕ
10		¾"ϕ
8	Plate	6"x6"x½"
20	Washers	6"x6"x⅜"
12	Machine Bolts	¾"x 12"
4		¾"x 14"
28	Anchor Bolts	¾"x 12"
44	Wrought Washers	¾"
884	Nails	60d
156		30d

DESIGNED Joseph J. Rimsay
CHECKED
DRAWN J.J. RIMSAY
CHECKED

MAY 6 1957
EXAMINED V. M. Bonine — ENGINEER OF BRIDGE AND TRAFFIC STRUCTURES
PASSED E. Hinrichs — ENGINEER OF DESIGN
APPROVED B. H. Bartelsmeyer — CHIEF HIGHWAY ENGINEER

ABUTMENTS
MILLINGTON BRIDGE
OVER FOX RIVER
LA SALLE - KENDALL COUNTIES
STATION 6+15.47
SECTION B

WILLETT HOFMANN & ASSOCIATES INC
ENGINEERING ARCHITECTURE LAND SURVEYING
809 EAST 2ND STREET, DIXON, IL 61021-0367
T: 815-284-3381 DESIGN FIRM: #184-000918

DESIGNED - BKC	REVISED -		
CHECKED - PLP	REVISED -		
DRAWN - FDL	REVISED -		
CHECKED - BKC	REVISED -		

LASALLE & KENDALL COUNTY
FAS 171(CH 3–MILLINGTON RD) OVER FOX RIVER
STATION 20+00

1957 EXISTING PLANS
STRUCTURE NO. 074-3000
STRUCTURAL SHEET NO. 38 OF 67 SHEETS

FAS RTE.	SECTION	COUNTY	TOTAL SHEETS	SHEET NO.
171	17-00802-00-BR	LASALLE	93	50
	17-00142-00-BR	KENDALL		

WHA* 1087J17 | ILLINOIS | FED. AID PROJECT WZPE(199) | CONTRACT NO. 87683

FILE = S:\PROJECTS\2017\1087J17_KCH\DESIGN\CAD_SHEETS\1087J17_1957 Existing Plans.dgn

STATE OF ILLINOIS
DEPARTMENT OF PUBLIC WORKS & BUILDINGS
DIVISION OF HIGHWAYS

ROUTE NO.	SECTION	COUNTY	TOTAL SHEETS	SHEET NO.
S.B.I. K.A.				
FED. ROAD DIST. NO. 7	ILLINOIS	FED. AID PROJECT		

SHEET NO. 9
9 SHEETS

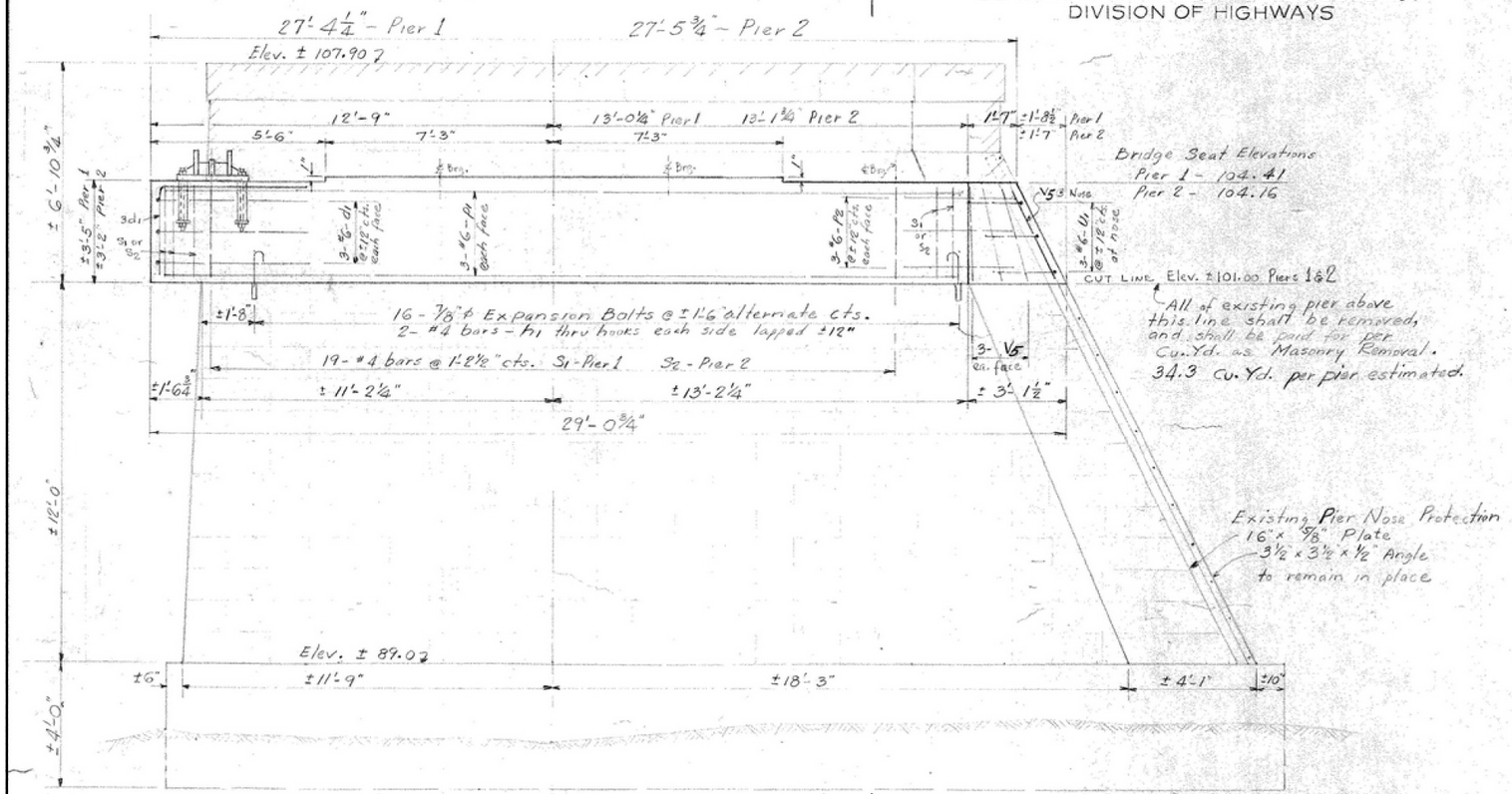

ELEVATION

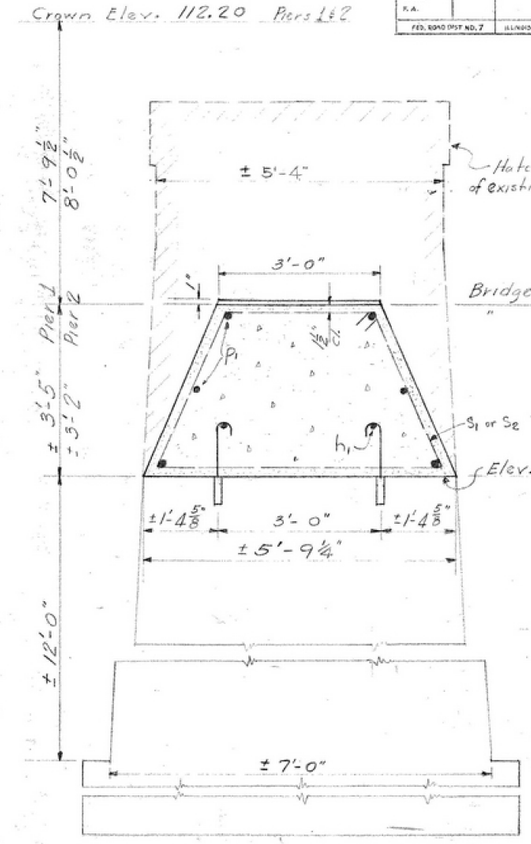

SECTION A-A

For detail of Expansion Bolt See sheet 7

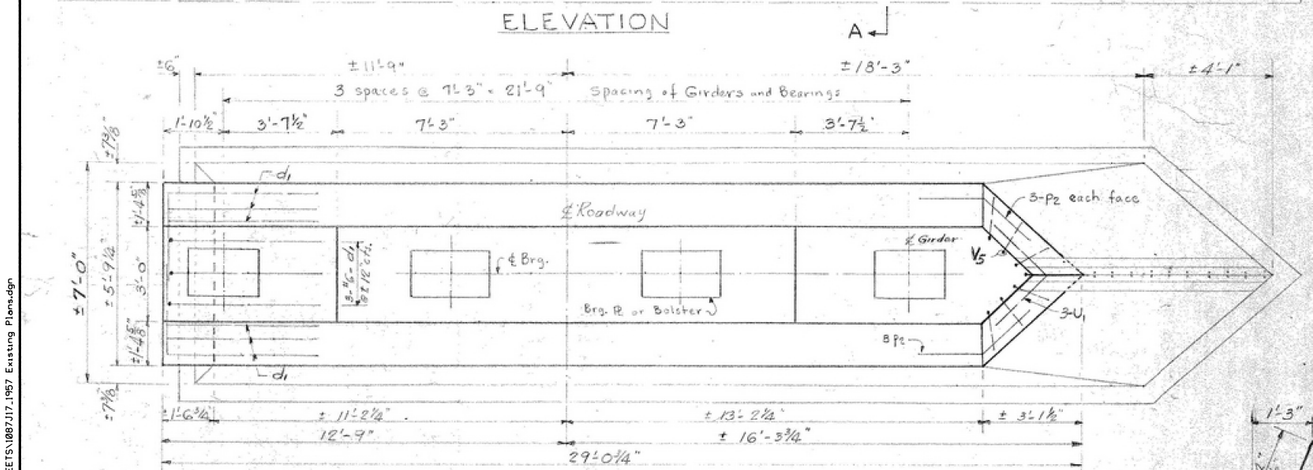

PLAN

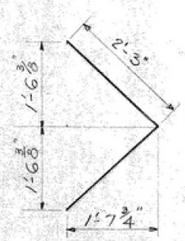

BAR U1

BAR P2

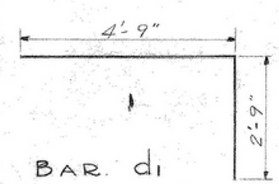

BAR d1

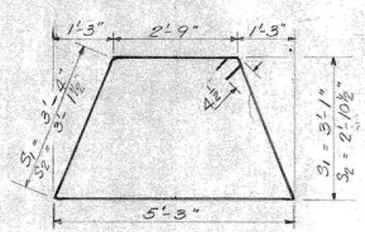

BARS S1 & S2

BILL OF MATERIAL
TWO PIERS

BAR	No.	SIZE	LENGTH	SHAPE
d1	18	#6	7'-6"	
h1	8	#4	12'-9"	
P1	12	#6	25'-3"	
P2	12	#6	4'-0"	
S1	24	#4	15'-5"	
S2	24	#4	15'-0"	
U1	6	#6	4'-6"	
V5	14	#4	3'-0"	
Class X Concrete			Cu. Yds.	29.3
Reinforcement Bars			Lbs.	1360
Masonry Removal			Cu. Yds.	68.6
Expansion Bolts			Each	32

PIERS

MILLINGTON BRIDGE
OVER FOX RIVER
LA SALLE - KENDALL COUNTIES
STATION 6+15.47
SECTION B

DESIGNED	Joseph J. Rimsay
CHECKED	
DRAWN	J.J. RIMSAY
CHECKED	

MAY 6 1957
EXAMINED — ENGINEER OF BRIDGE AND TRAFFIC STRUCTURES
PASSED — ENGINEER OF DESIGN
APPROVED — CHIEF HIGHWAY ENGINEER

NOTE :- Flame-cut existing steel Pier Nose protection flush with top of proposed pier caps. Weld suitable lugs to protection ℞ and imbed into new concrete.
All Masonry joints shall be raked clean of all loose material and shall be tuck pointed. Cost of above shall be incidental to the contract.

FOR INFORMATION ONLY

WILLETT HOFMANN & ASSOCIATES INC
ENGINEERING ARCHITECTURE LAND SURVEYING
809 EAST 2ND STREET, DIXON, IL 61021-0367
T: 815-284-3381 DESIGN FIRM: #184-000918

DESIGNED - BKC	REVISED -		
CHECKED - PLP	REVISED -		
DRAWN - FDL	REVISED -		
CHECKED - BKC	REVISED -		

LASALLE & KENDALL COUNTY
FAS 171(CH 3–MILLINGTON RD) OVER FOX RIVER
STATION 20+00

1957 EXISTING PLANS
STRUCTURE NO. 074-3000
STRUCTURAL SHEET NO. 39 OF 67 SHEETS

FAS RTE.	SECTION	COUNTY	TOTAL SHEETS	SHEET NO.
171	17-00802-00-BR	LASALLE	93	51
	17-00142-00-BR	KENDALL		

WHA* 1087J17 | ILLINOIS | FED. AID PROJECT WZPE(199) | CONTRACT NO. 87683

FILE = S:\PROJECTS\2017\1087J17_KCH\DESIGN\CAD_SHEETS\1087J17_1957 Existing Plans.dgn

FAS RTE	SECTION	COUNTY	TOTAL SHEETS	SHEET NO.
171	94-00036-00-BR	KENDALL	25	1
F.A.M.A. REG.	ILLINOIS	PROJECT		

STATE OF ILLINOIS
DEPARTMENT OF TRANSPORTATION
PROPOSED LOCAL AGENCY IMPROVEMENT
FEDERAL AID – MAJOR BRIDGE PROGRAM

KENDALL COUNTY
FAS 171 (C.H. 3)
MILLINGTON BRIDGE
OVER FOX RIVER
SECTION: 94–00036–00–BR
PROJECT: BHS–171 (106)
JOB: C–93–036–98

INDEX OF SHEETS

COUNTY HIGHWAY 3 (BRIDGE STREET)
CLASSIFICATION: MAJOR COLLECTOR
CURRENT ADT = 1700 (1999)
DESIGN ADT = 2100 (2019)
95% P.C. 4% S.U. 1% MU
DESIGN SPEED 50 M.P.H.

THE CONTRACTOR SHALL BE RESPONSIBLE FOR PROTECTING UTILITY PROPERTY FROM CONSTRUCTION OPERATIONS AS OUTLINED IN ARTICLE 107.20 OF THE STANDARD SPECIFICATIONS. THE J.U.L.I.E. NUMBER IS 1-800-892-0123. A MINIMUM OF FORTY-EIGHT HOURS ADVANCE NOTICE IS REQUIRED.

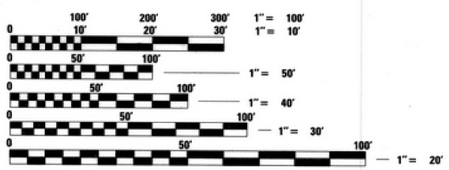

FULL SIZE PLANS HAVE BEEN PREPARED USING STANDARD ENGINEERING SCALES, REDUCED SIZED PLANS WILL NOT CONFORM TO STANDARD SCALES, IN MAKING MEASUREMENTS ON REDUCED PLANS, THE ABOVE SCALES MAY BE USED.

CONTRACT NO. 87180

PROJECT ENDS
STA. 20+24

PROPOSED S.N. 047-3000

BEGIN PROJECT
STA. 11+35

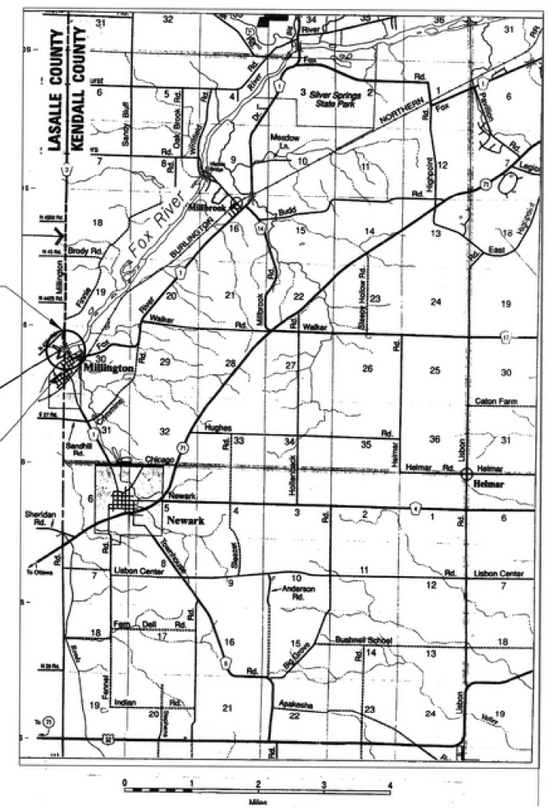

SECTION 30, TOWNSHIP 36N, RANGE 6E OF THIRD PRINCIPAL MERIDIAN

LOCATION PLAN

GROSS AND NET LENGTH OF PROJECT = 889 LIN. FT. = 0.168 MILES

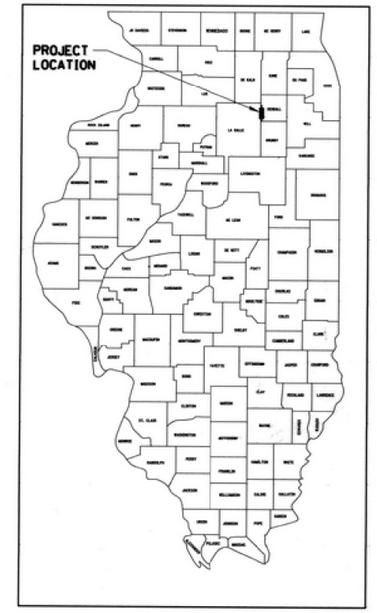

LIST OF STANDARDS

000001-03 Standard Symbols, Abbreviations and Patterns
420401-02 Bridge Approach Pavement
515001 Name Plate for Bridges
542401 Metal End Section for Pipe Culverts
601001 Sub-Surface Drains
601101 Concrete Headwall for Pipe Drains
606001-01 Concrete Curb & Combination Concrete Curb & Gutter
606006 Outlet for Concrete Curb and Gutter, Type B-15.60 (B-6.24)
609001-01 Bridge Approach Shoulder Pavement and Drain
630001-02 Steel Plate Beam Guardrail
630201-02 PCC/Bituminous Stabilization at Steel Plate Beam Guardrail
631031-02 Traffic Barrier Terminal, Type 6
702001-01 Traffic Control Devices
BLR 21-5 Typical Application of Traffic Control Devices on Rural Local Highways

N

LOUIS BOWMAN JR. 20435 REGISTERED PROFESSIONAL ENGINEER OF ILLINOIS

Louis Bowman Jr.

POLICY STATEMENT:
THESE PLANS WERE DEVELOPED USING THE FEDERAL AID PROCEDURES FOR LOCAL HIGHWAY IMPROVEMENT.

APPROVED DECEMBER 30 19 99
Francis C. Hare
KENDALL COUNTY ENGINEER

APPROVED DECEMBER 30 19 99
Lawrence G. Kenyon
LASALLE COUNTY ENGINEER

PASSED 1-3 19 2000
D. P. Mutell
DISTRICT ENGINEER OF LOCAL ROADS AND STREETS

APPROVED 1-3 19 2000
D. A. Piper
DISTRICT ENGINEER

FOR INFORMATION ONLY

WILLETT HOFMANN & ASSOCIATES INC
ENGINEERING ARCHITECTURE LAND SURVEYING
809 EAST 2ND STREET, DIXON, IL 61021-0367
T: 815-284-3381 DESIGN FIRM: #184-000918

DESIGNED - BKC	REVISED -		
CHECKED - PLP	REVISED -		
DRAWN - FDL	REVISED -		
CHECKED - BKC	REVISED -		

LASALLE & KENDALL COUNTY
FAS 171(CH 3–MILLINGTON RD) OVER FOX RIVER
STATION 20+00

2000 EXISTING PLANS
STRUCTURE NO. 047-3000
STRUCTURAL SHEET NO. 40 OF 67 SHEETS

FAS RTE.	SECTION	COUNTY	TOTAL SHEETS	SHEET NO.
171	17-00802-00-BR	LASALLE	93	52
	17-00142-00-BR	KENDALL		

WHA# 1087J17 ILLINOIS FED. AID PROJECT WZPE(199) CONTRACT NO. 87683

FILE = S:\PROJECTS\2017\1087J17_KCH\DESIGN\CAD_SHEETS\1087J17_2000 Existing Plans.dgn

FAS RTE.	SECTION	COUNTY	TOTAL SHEETS	SHEET NO
171	94-00036-00-BR	KENDALL	25	2
STA.		TO STA.		
FED. ROAD DIST. NO.	ILLINOIS	FED. AID PROJECT		

SUMMARY OF QUANTITIES

	CODE NO.	ITEM	UNIT	X071-2A TOTAL	ROAD	
	20200100	EARTH EXCAVATION	CU YD	401	401	
	20500150	EMBANKMENT	CU YD	200	200	
	20800150	TRENCH BACKFILL	CU YD	4	4	
	35101400	AGGREGATE BASE COURSE, TYPE B	TON	288	288	
	40600100	BITUMINOUS MATERIAL (PRIME COAT)	GAL	410	410	
	40600760	BITUMINOUS CONCRETE BINDER COURSE MIXTURE B, TYPE 2	TON	65	65	
	40600840	BITMINOUS CONCRETE SURFACE COURSE MIXTURE C, CLASS I, TYPE 2	TON	39	39	
	42001165	BRIDGE APPROACH PAVEMENT	SQ YD	188	188	
	42001430	BRIDGE APPROACH PAVEMENT CONNECTOR (FLEXIBLE)	SQ YD	38	38	
	48200400	BITUMINOUS SHOULDERS 6"	SQ YD	328	328	
	48200600	BITUMINOUS SHOULDERS 8"	SQ YD	42	42	
	50102400	CONCRETE REMOVAL	CU YD	23.2		23.2
*	50104100	BRIDGE HANDRAIL REMOVAL	FOOT	904		904
*	50104800	REMOVAL OF EXISTING CONCRETE DECK	L.SUM	1		1
	50200100	STRUCTURE EXCAVATION	CU YD	268		268
	50300100	FLOOR DRAINS	EACH	54		54
	50300150	NEOPRENE EXPANSION JOINT 2"	FOOT	30		30
	50300160	NEOPRENE EXPANSION JOINT 4"	FOOT	30		30
	50300225	CONCRETE STRUCTURES	CU YD	141.5		141.5
	50300255	CONCRETE SUPERSTRUCTURE	CU YD	492.2		492.2
	50300260	BRIDGE DECK GROOVING	SQ YD	1,398		1,398
	50300300	PROTECTIVE COAT	SQ YD	2,054	288	1,766
*	50301250	FORMED CONCRETE REPAIR (DEPTH GREATER THAN 5")	SQ FT	128		128
	50500105	FURNISHING AND ERECTING STRUCTURAL STEEL	L.SUM	1		1
	50500505	STUD SHEAR CONNECTORS	EACH	3,664		3,664
*	50500715	JACK AND REMOVE EXISTING BEARINGS	EACH	16		16
*	50600300	CLEANING AND PAINTING STEEL BRIDGE	L.SUM	1		1
*	50606200	BLASTING RESIDUE CONTAINMENT AND DISPOSAL	L.SUM	1		1
*	50606300	POWER TOOL CLEANING RESIDUE CONTAINMENT AND DISPOSAL	L.SUM	1		1
	50800205	REINFORCEMENT BARS, EPOXY COATED	POUND	132,780		132,780
	51201400	FURNISHING STEEL PILES HP10x42	FOOT	228		228
	51202700	DRIVING STEEL PILES	FOOT	228		228
	51500100	NAME PLATES	EACH	1		1
	54213447	END SECTIONS 12"	EACH	1	1	
	55021600	STORM SEWERS, TYPE 2, REINFORCED CONCRETE CULVERT, STORM DRAIN, AND SEWER PIPE, CLASS III	FOOT	24	24	
	58700200	BRIDGE SEAT SEALER	SQ FT	159		159
	59000100	EPOXY CRACK SEALING	FOOT	38		38
	60100060	CONCRETE HEADWALL FOR PIPE DRAINS	EACH	2	2	
	60100915	PIPE DRAINS 6"	FOOT	20	20	
	60100945	PIPE DRAINS 12"	FOOT	50	50	
	60107700	PIPE UNDERDRAINS 6"	FOOT	234	112	122
*	60603400	GUTTER OUTLET (SPECIAL)	EACH	2	2	
	60605000	COMBINATION CONCRETE CURB AND GUTTER, TYPE B-6.24	FOOT	280	280	
*	60900130	TYPE B INLET BOX, STANDARD 609001 (SPECIAL)	EACH	2	2	
	60900515	CONCRETE THRUST BLOCKS	EACH	1	1	
	63000000	STEEL PLATE BEAM GUARD RAIL, TYPE A	FOOT	388	388	
	63100085	TRAFFIC BARRIER TERMINAL, TYPE 6	EACH	4	4	
*	63100165	TRAFFIC BARRIER TERMINAL, TYPE 1, SPECIAL (TANGENT)	EACH	4	4	
	63200310	GUARD RAIL REMOVAL	FOOT	908	908	
*	70101700	TRAFFIC CONTROL AND PROTECTION	L.SUM	1		1
*	78200405	GUARD RAIL MARKERS	EACH	46		46
	78201000	TERMINAL MARKER DIRECT APPLIED	EACH	4	4	
*		FLOATING BEARINGS, FIXED	EACH	4		4
*		FLOATING BEARINGS, GUIDED EXPANSION	EACH	12		12
*	X0322001	STONE MASONRY TUCK POINTING	FOOT	107		107

* SPECIAL PROVISION

GENERAL NOTES

THE THICKNESS OF BITUMINOUS MIXTURES SHOWN ON THE PLANS IS THE NOMINAL THICKNESS. DEVIATIONS FROM THE NOMINAL THICKNESS WILL BE PERMITTED WHEN SUCH DEVIATIONS OCCUR DUE TO IRREGULARITIES IN THE EXISTING SURFACE OR BASE ON WHICH THE BITUMINOUS MIXTURE IS PLACED.

EXCEPT AS NOTED IN THE PLANS, PAVEMENT GRADES SHOWN ARE AT THE TOP OF PAVEMENT SURFACES.

BEFORE ORDERING PIPE CULVERTS OR PIPE DRAINS, THE CONTRACTOR SHALL CONSULT THE ENGINEER FOR EXACT LENGTHS.

ALL SAW CUTTING OF EXISTING PAVEMENT SHALL BE CONSIDERED INCIDENTAL TO THE CONTRACT. THE MINIMUM SAW CUT DEPTH IN THE PAVEMENT SHALL BE 1.5 INCHES UNLESS OTHERWISE SPECIFIED IN A DETAIL IN THE PLANS.

ANY REFERENCE TO A STANDARD IN THESE PLANS SHALL BE INTERPRETED TO MEAN THE ILLINOIS DEPARTMENT OF TRANSPORTATION STANDARD SPECIFICATIONS FOR ROAD AND BRIDGE CONSTRUCTION.

BEFORE STARTING ANY EXCAVATION, THE CONTRACTOR MUST CALL J.U.L.I.E. AT 1-800-892-0123 FOR FIELD LOCATIONS OF ALL PUBLIC UTILITIES (48 HOURS NOTIFICATION IS REQUIRED).

IT IS THE CONTRACTOR'S SOLE RESPONSIBILITY TO PROTECT ALL UTILITIES WITHIN THE WORK AREA AND ALL PROPERTY ADJACENT TO THE WORK AREA.

THE EXISTING DECK SHALL BE MARKED, SAWN AND REMOVED IN SLABS AS DIRECTED BY THE ENGINEER TO MINIMIZE THE AMOUNT OF DEBRIS THAT FALLS IN THE FOX RIVER.

PROTECTIVE COAT SHALL BE APPLIED TO THE EXPOSED PORTIONS OF THE DECK, APPROACH SLABS AND INSIDE FACE OF THE PARAPET WALLS, IN ACCORDANCE WITH ARTICLE 503.

DETOUR SIGNING, ROAD CLOSURE SIGN AND BARRICADES, AS WELL AS TRAFFIC CONTROL SURVEILLANCE SHALL BE INCLUDED IN THE LUMP SUM PRICE OF TRAFFIC CONTROL AND PROTECTION. TRAFFIC CONTROL DEVICES, TEMPORARY SIGNS AND THE METHOD OF THEIR INSTALLATION SHALL BE IN ACCORDANCE WITH IDOT STANDARDS 702001 AND BLR 21-5 AND SHALL BE APPROVED BY THE ENGINEER IN ADVANCE.

THE FOLLOWING WORK ITEMS WILL NOT BE PAID FOR AS SEPARATE ITEMS BUT SHALL BE CONSIDERED INCIDENTAL TO THE CONTRACT:

FURNISHING AND PLACING TOPSOIL, 4", EROSION CONTROL BLANKET, SEEDING, CLASS 2, AND FERTILIZERS APPROXIMATELY 0.3 ACRES PER IDOT STANDARD SPECIFICATIONS, SECTIONS 211, 250, 251 AS SHOWN IN TYPICAL SECTIONS AND CROSS SECTIONS OR AS DIRECTED BY THE ENGINEER.

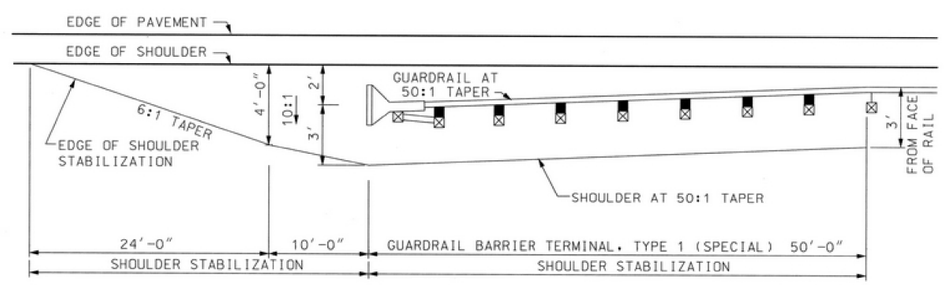

SHOULDER WIDENING FOR GUARDRAIL BARRIER TERMINAL, TYPE 1 (SPECIAL)

FOR INFORMATION ONLY

MILLINGTON BRIDGE
OVER FOX RIVER
SECTION 94-00036-00-BR
LASALLE-KENDALL COUNTIES
GENERAL NOTES, DETAIL AND SUMMARY OF QUANTITIES

FILE = S:\PROJECTS\2017\1087J17_KCH\DESIGN\CAD_SHEETS\1087J17_2000 Existing Plans.dgn

WILLETT HOFMANN & ASSOCIATES INC
ENGINEERING ARCHITECTURE LAND SURVEYING
809 EAST 2ND STREET, DIXON, IL 61021-0367
T: 815-284-3381 DESIGN FIRM: #184-000918

DESIGNED - BKC	REVISED -	LASALLE & KENDALL COUNTY	2000 EXISTING PLANS
CHECKED - PLP	REVISED -	FAS 171(CH 3–MILLINGTON RD) OVER FOX RIVER	STRUCTURE NO. 047-3000
DRAWN - FDL	REVISED -	STATION 20+00	STRUCTURAL SHEET NO. 41 OF 67 SHEETS
CHECKED - BKC	REVISED -		

FAS RTE.	SECTION	COUNTY	TOTAL SHEETS	SHEET NO.
171	17-00802-00-BR	LASALLE	93	53
	17-00142-00-BR	KENDALL		

WHA# 1087J17 ILLINOIS FED. AID PROJECT WZPE(199) CONTRACT NO. 87683

FAS RTE.	SECTION	COUNTY	TOTAL SHEETS	SHEET NO
171	94-00036-00-BR	KENDALL	25	3
STA.		TO STA.		
FED. ROAD DIST. NO.	ILLINOIS	FED. AID PROJECT		

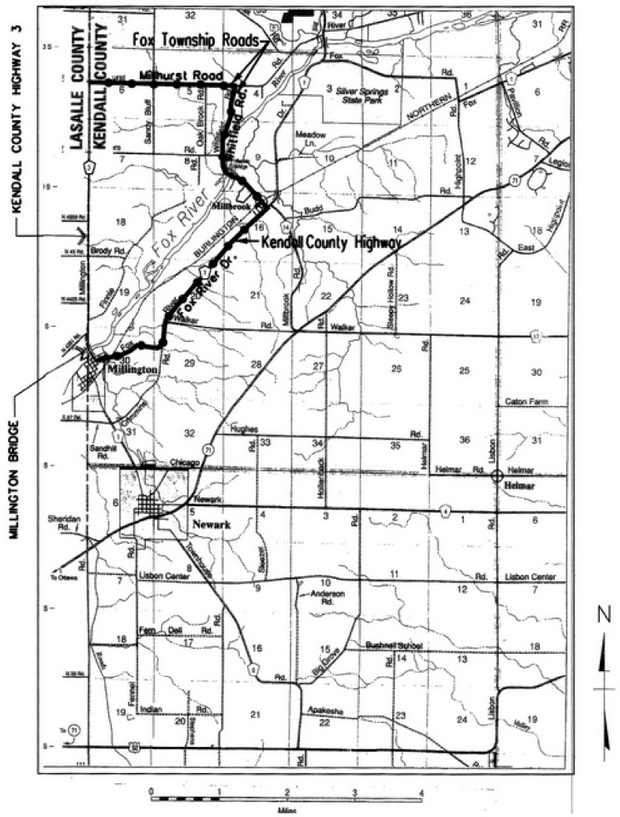

DETOUR ROUTE

RECOMMENDED DETOUR ROUTE

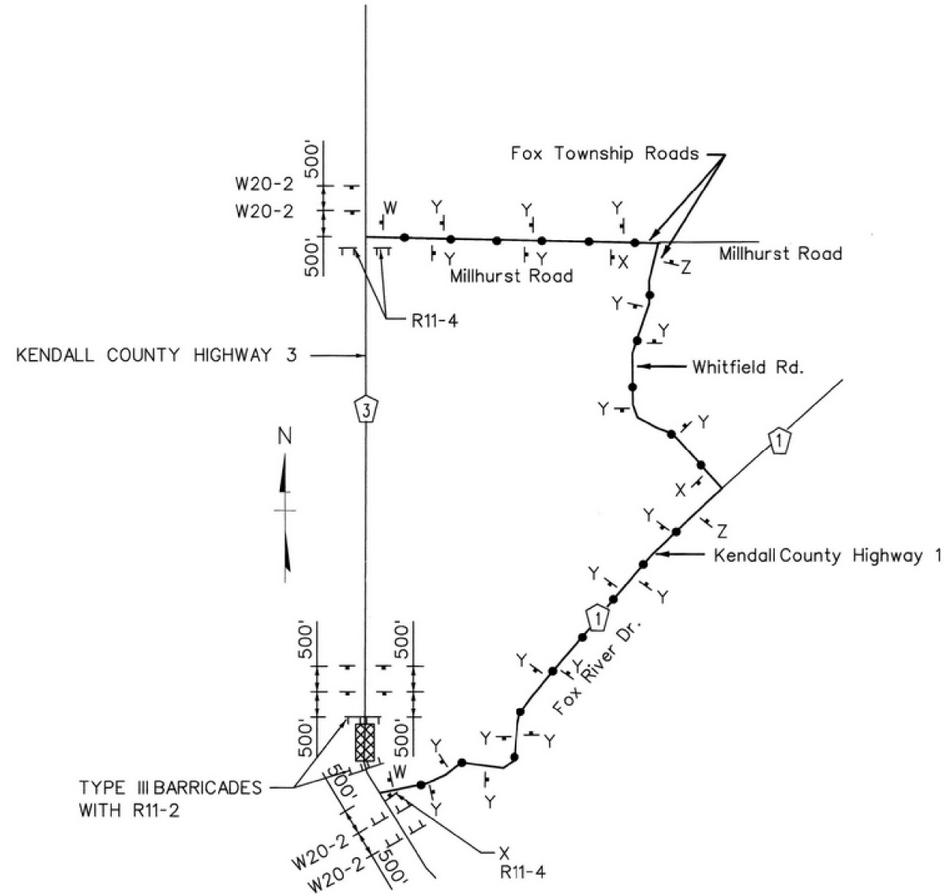

ROAD CLOSURE DETAIL

RECOMMENDED DETOUR ROUTE

MILLINGTON BRIDGE CONSTRUCTION ZONE

TYPE III BARRICADE

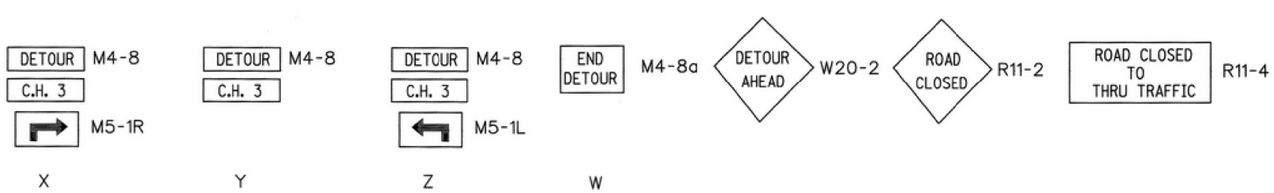

DETOUR SIGNING ASSEMBLY

FOR INFORMATION ONLY

MILLINGTON BRIDGE
OVER FOX RIVER
SECTION 94-00036-00-BR
LASALLE-KENDALL COUNTIES
DETOUR ROUTE DETAILS

FILE = S:\PROJECTS\2017\1087J17.KCH\DESIGN\CAD.SHEETS\1087J17.2000 Existing Plans.dgn

WILLETT HOFMANN & ASSOCIATES INC
ENGINEERING ARCHITECTURE LAND SURVEYING
809 EAST 2ND STREET, DIXON, IL 61021-0367
T: 815-284-3381 DESIGN FIRM: #184-000918

DESIGNED	- BKC	REVISED	-
CHECKED	- PLP	REVISED	-
DRAWN	- FDL	REVISED	-
CHECKED	- BKC	REVISED	-

LASALLE & KENDALL COUNTY
FAS 171(CH 3–MILLINGTON RD) OVER FOX RIVER
STATION 20+00

2000 EXISTING PLANS
STRUCTURE NO. 047-3000

STRUCTURAL SHEET NO. 42 OF 67 SHEETS

FAS RTE.	SECTION	COUNTY	TOTAL SHEETS	SHEET NO.
171	17-00802-00-BR	LASALLE	93	54
	17-00142-00-BR	KENDALL		

WHA# 1087J17 | ILLINOIS | FED. AID PROJECT WZPE(199) | CONTRACT NO. 87683

FAS RTE.	SECTION	COUNTY	TOTAL SHEETS	SHEET NO
171	94-00036-00-BR	KENDALL	25	4
STA.	TO STA.			
FED. ROAD DIST. NO.	ILLINOIS	FED. AID PROJECT		

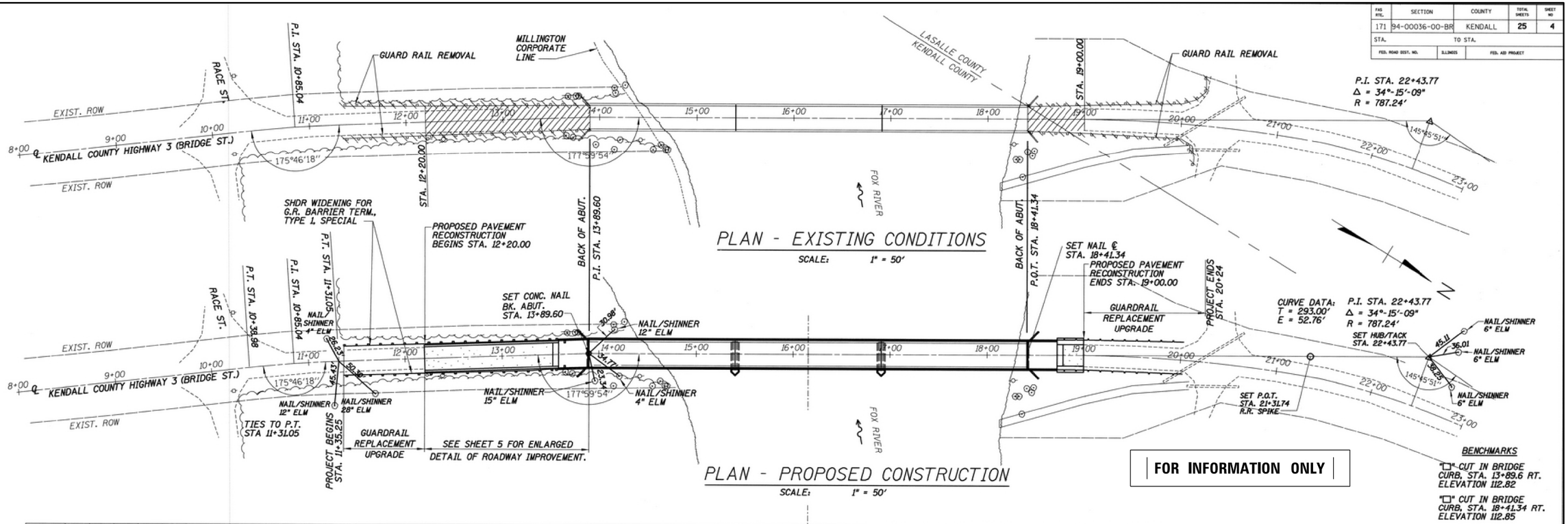

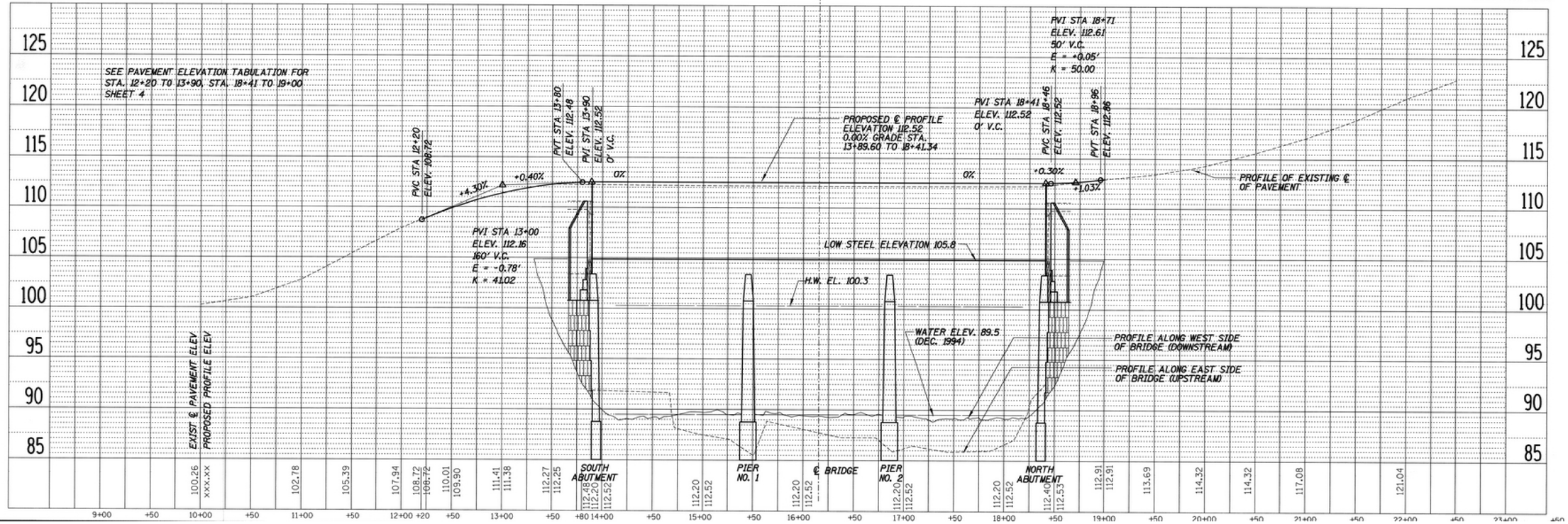

WILLETT HOFMANN & ASSOCIATES INC
ENGINEERING ARCHITECTURE LAND SURVEYING
809 EAST 2ND STREET, DIXON, IL 61021-0367
T: 815-284-3381 DESIGN FIRM: #184-000918

DESIGNED - BKC	REVISED -		
CHECKED - PLP	REVISED -		
DRAWN - FDL	REVISED -		
CHECKED - BKC	REVISED -		

LASALLE & KENDALL COUNTY
FAS 171(CH 3–MILLINGTON RD) OVER FOX RIVER
STATION 20+00

2000 EXISTING PLANS
STRUCTURE NO. 047-3000

STRUCTURAL SHEET NO. 43 OF 67 SHEETS

FAS RTE.	SECTION	COUNTY	TOTAL SHEETS	SHEET NO.
171	17-00802-00-BR	LASALLE	93	55
	17-00142-00-BR	KENDALL		

WHA# 1087J17 | ILLINOIS | FED. AID PROJECT WZPE(199) | CONTRACT NO. 87683

FILE = S:\PROJECTS\2017\1087J17_KCH\DESIGN\CAD_SHEETS\1087J17-2000 Existing Plans.dgn

FAS RTE.	SECTION	COUNTY	TOTAL SHEETS	SHEET NO
171	94-00036-00-BR	KENDALL	25	5
STA.	TO STA.			
FED. ROAD DIST. NO.	ILLINOIS	FED. AID PROJECT		

PAVEMENT SCHEDULE

(A) STA. 12+20 TO 13+53.60
- 159 C.Y. EARTH EXCAVATION
- 246 TONS AGGREGATE BASE COURSE, TYPE B
- 178 GAL. BITUMINOUS MATERIALS, (PRIME COAT)
- 51 TONS BIT. CONC. B.C., MIX B, T-2
- 31 TONS BIT. CONC. S.C., MIX D, CL I, T-1

(B) STA. 13+53.60 TO 13+59.60
- 16 S.Y. BRIDGE APPROACH PAVT CONNECTOR (FLEXIBLE)

(C) STA. 13+59.60 TO 13+89.60
- 94 S.Y. BRIDGE APPROACH PAVEMENT (STD 420401)
- 94 S.Y. PROTECTIVE COAT

(D) STA. 18+41.34 TO 18+71.34
- 94 S.Y. BRIDGE APPROACH PAVEMENT (STD 420401)
- 94 S.Y. PROTECTIVE COAT

(E) STA. 18+71.34 TO 18+77.34
- 16 S.Y. BRIDGE APPROACH PAVT CONNECTOR (FLEXIBLE)
- 9 S.Y. BITUMINOUS SHOULDER 8"

(F) STA. 18+77.34 TO 19+00
- 27 C.Y. EARTH EXCAVATION
- 42 TONS AGGREGATE BASE COURSE, TYPE B
- 35 GALS. BITUMINOUS MATERIALS (PRIME COAT)
- 9 TONS BIT. CONC. B.C., MIX B, T-2
- 7 TONS BIT. CONC. S.C. MIX D, CL I, T-1
- 42 S.Y. BITUMINOUS SHOULDER 8"

(G) AT PROPOSED GUARDRAIL
- 164 GALS. BITUMINOUS MATERIALS (PRIME COAT)
- 328 S.Y. BITUMINOUS SHOULDER 6"
- 101 C.Y. EARTH EXCAVATION

PAVEMENT ELEVATIONS

STATION	12'LT.	℄	12'RT.
12+20	* ME	* ME	* ME
12+50	109.89	109.90	109.29
12+75	110.62	110.72	110.22
13+00	111.20	111.38	110.98
13+25	111.71	111.89	111.59
13+50	112.07	112.25	112.07
13+60	112.17	112.35	112.17
STATION	14'LT.	℄	14'RT.
13+60	112.19	112.40	112.19
13+90	112.31	112.52	112.31
STATION	14'LT.	℄	14'RT.
18+41	112.31	112.52	112.31
18+71	112.45	112.66	112.45
STATION	12'LT.	℄	12'RT.
18+71	112.48	112.66	112.48
18+85	112.59	112.77	112.59
19+00	* ME	* ME	* ME

* ME = MATCH EXISTING

DRAINAGE SCHEDULE

STA. 13+66 RT.
1 EA. TYPE B INLET BOX
STD. 609001 (SPECIAL)
RIM ELEV. 112.21
INV. ELEV. 108.43
24 L.F. STORM SEWER, TYPE 2,
RCP CL III, 12"
4 C.Y. TRENCH BACKFILL

STA 13+66 LT.
1 EA. TYPE B INLET BOX
STD 609001 (SPECIAL)
RIM ELEV. 112.21
INV. ELEV. 108.18
50 L.F. PIPE DRAIN, 12"
(2-30° BENDS REQ'D)
1 EA. CONCRETE THRUST BLOCK
(ALIGNMENT OF 12" PIPE DRAIN
TO BE DETERMINED BY THE
ENGINEER TO AVOID TREE REMOVAL)

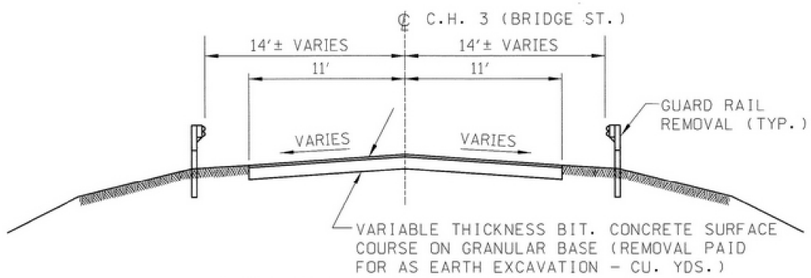

EXISTING TYPICAL SECTION

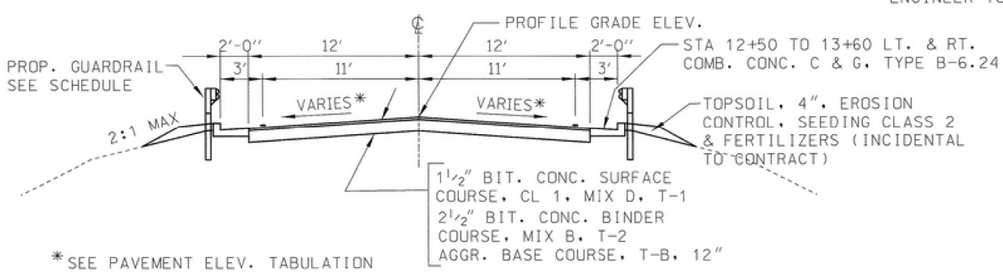

PROPOSED TYPICAL SECTION SOUTH APPROACH

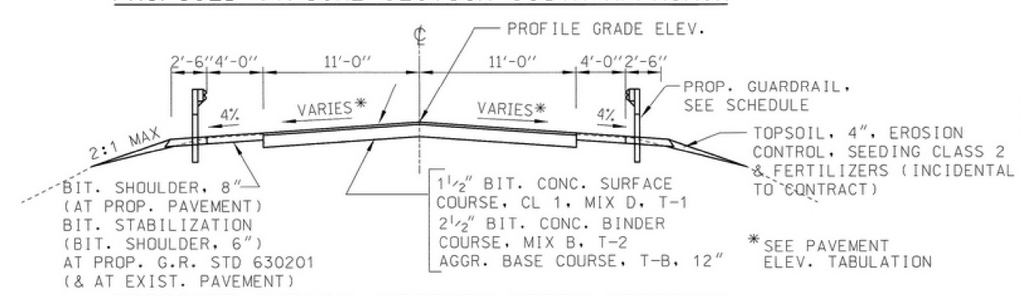

PROPOSED TYPICAL SECTION NORTH APPROACH

GUARDRAIL SCHEDULE

GUARD RAIL REMOVAL

STATION TO STATION	
11+36 - 13+90 LT& RT	508
18+41 - 20+25 LT	205
18+41 - 20+25 RT	195
TOTAL	908 FT

STEEL PLATE BEAM GUARD RAIL, TYPE A

STA. 11+85.25 TO 13+29.02 LT & RT	288 FT
STA. 19+02 TO 19+52 LT & RT	100 FT
TOTAL	388 FT

TRAF. BARRIER TERMINAL, TYPE 6

STA. 13+29.02 TO 13+59.60 LT & RT	2 EACH
STA. 18+71.34 TO 19+02.00 LT & RT	2 EACH
TOTAL	4 EACH

TRAF. BARRIER TERM., TYPE 1 (SPECIAL)
SEE DETAIL SHEET 2

STA. 11+35.75 TO 11+85.25 LT & RT	2 EACH
STA. 19+52.00 TO 20+02.00 LT & RT	2 EACH
TOTAL	4 EACH

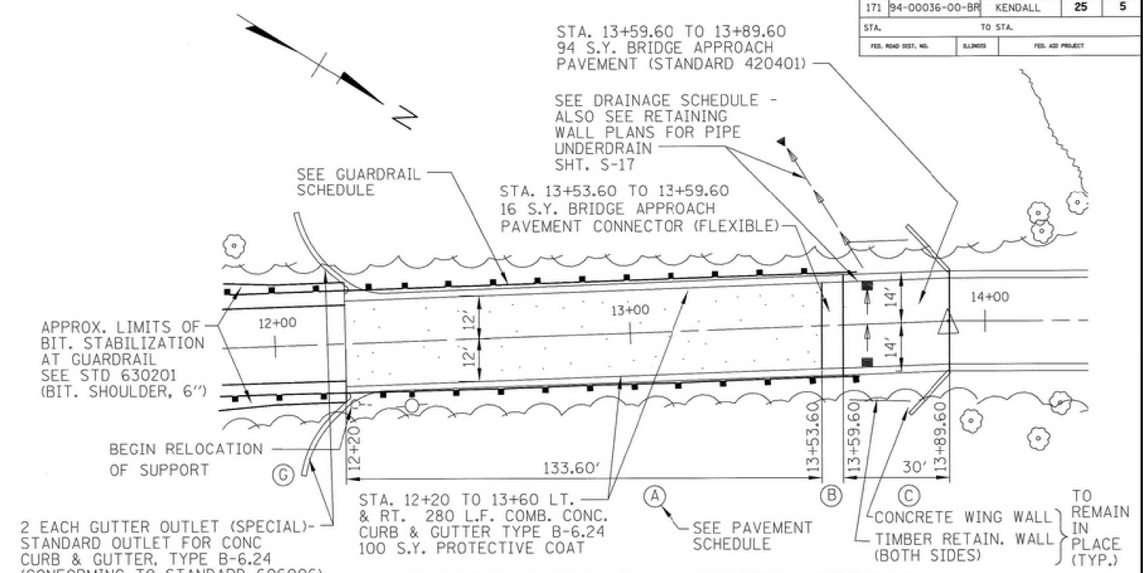

ENLARGED DETAIL - SOUTH APPROACH

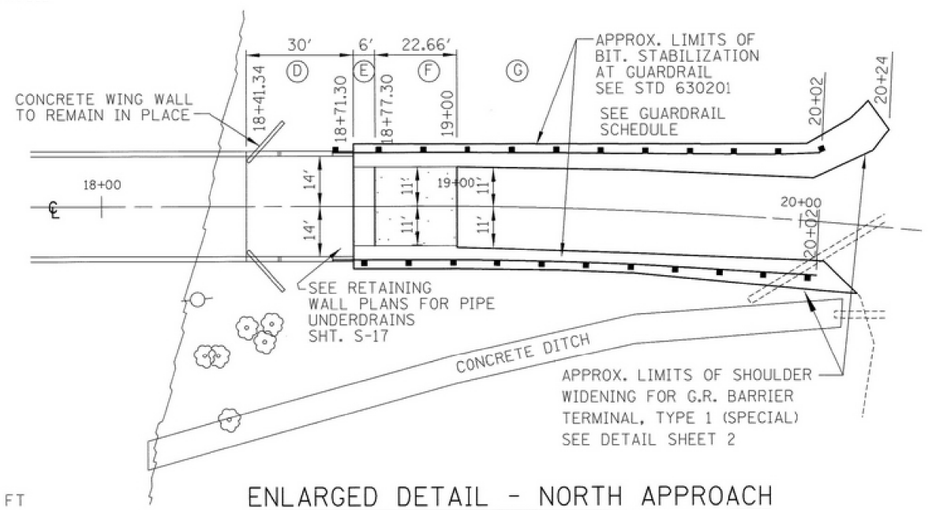

ENLARGED DETAIL - NORTH APPROACH

FOR INFORMATION ONLY

MILLINGTON BRIDGE
OVER FOX RIVER
SECTION 94-00036-00-BR
LASALLE-KENDALL COUNTIES
TYPICAL SECTIONS, DETAILS,
AND QUANTITY SCHEDULES

FILE = S:\PROJECTS\2017\1087J17_KCH\DESIGN\CAD_SHEETS\1087J17_2000 Existing Plans.dgn

WILLETT HOFMANN & ASSOCIATES INC
ENGINEERING ARCHITECTURE LAND SURVEYING
809 EAST 2ND STREET, DIXON, IL 61021-0367
T: 815-284-3381 DESIGN FIRM: #184-000918

DESIGNED -	BKC	REVISED -	
CHECKED -	PLP	REVISED -	
DRAWN -	FDL	REVISED -	
CHECKED -	BKC	REVISED -	

LASALLE & KENDALL COUNTY
FAS 171(CH 3–MILLINGTON RD) OVER FOX RIVER
STATION 20+00

2000 EXISTING PLANS
STRUCTURE NO. 047-3000

STRUCTURAL SHEET NO. 44 OF 67 SHEETS

FAS RTE.	SECTION	COUNTY	TOTAL SHEETS	SHEET NO.
171	17-00802-00-BR	LASALLE	93	56
	17-00142-00-BR	KENDALL		

WHA* 1087J17 | ILLINOIS | FED. AID PROJECT WZPE(199) | CONTRACT NO. 87683

F.A.S. RTE.	SECTION	COUNTY	TOTAL SHEETS	SHEET NO
171	94-00036-00-BR	KENDALL	25	6
STA. 12+00.00 TO STA. 13+50.00				
FED. ROAD DIST. NO.	ILLINOIS	FED. AID PROJECT		

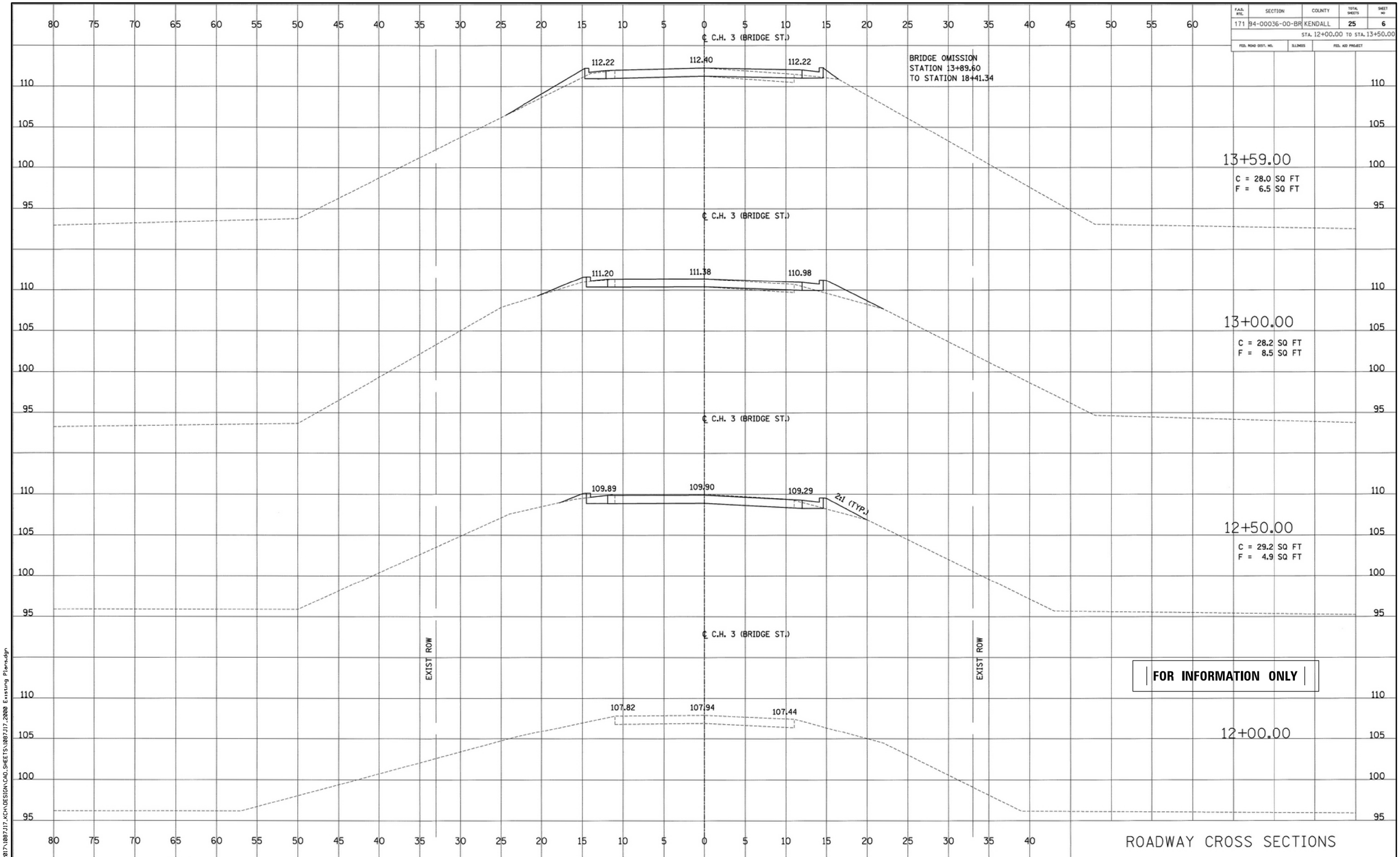

FILE = S:\PROJECTS\2017\1087J17_KCH\DESIGN\CAD_SHEETS\1087J17_2000 Existing Plans.dgn

WILLETT HOFMANN & ASSOCIATES INC
ENGINEERING ARCHITECTURE LAND SURVEYING
809 EAST 2ND STREET, DIXON, IL 61021-0367
T: 815-284-3381 DESIGN FIRM: #184-000918

DESIGNED - BKC	REVISED -		
CHECKED - PLP	REVISED -		
DRAWN - FDL	REVISED -		
CHECKED - BKC	REVISED -		

LASALLE & KENDALL COUNTY
FAS 171(CH 3–MILLINGTON RD) OVER FOX RIVER
STATION 20+00

2000 EXISTING PLANS
STRUCTURE NO. 047-3000

STRUCTURAL SHEET NO. 45 OF 67 SHEETS

FAS RTE.	SECTION	COUNTY	TOTAL SHEETS	SHEET NO.
171	17-00802-00-BR	LASALLE	93	57
	17-00142-00-BR	KENDALL		

WHA# 1087J17 | ILLINOIS | FED. AID PROJECT WZPE(199) | CONTRACT NO. 87683

F.A.S. RTE.	SECTION	COUNTY	TOTAL SHEETS	SHEET NO
171	94-00036-00-BR	KENDALL	25	7
STA. 18+50.00 TO STA. 19+50.00				
FED. ROAD DIST. NO.	ILLINOIS	FED. AID PROJECT		

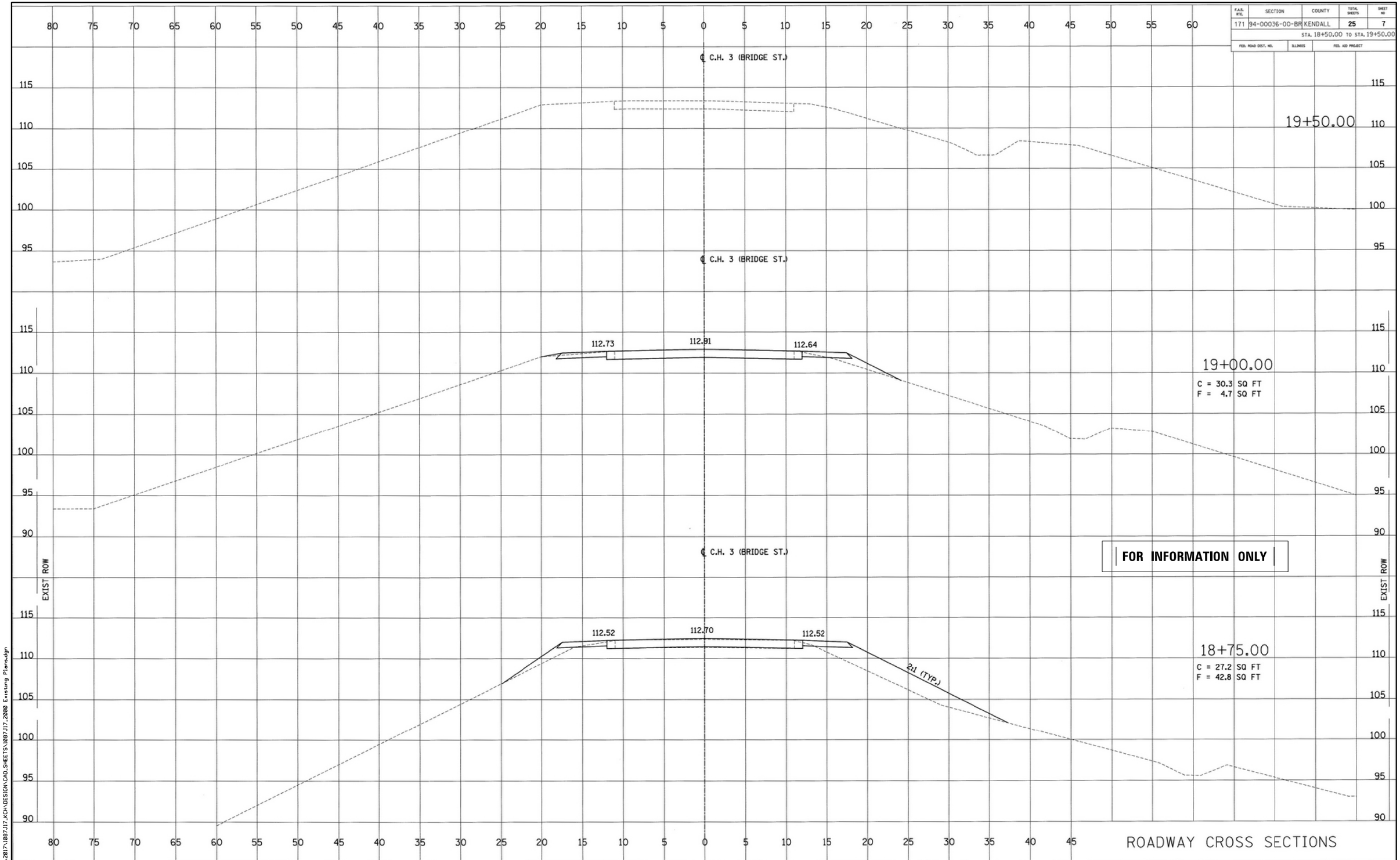

FILE = S:\PROJECTS\2017\1087J17_KCH\DESIGN\CAD_SHEETS\1087J17_2000 Existing Plans.dgn

WILLETT HOFMANN & ASSOCIATES INC
ENGINEERING ARCHITECTURE LAND SURVEYING
809 EAST 2ND STREET, DIXON, IL 61021-0367
T: 815-284-3381 DESIGN FIRM: #184-000918

DESIGNED -	BKC	REVISED -	
CHECKED -	PLP	REVISED -	
DRAWN -	FDL	REVISED -	
CHECKED -	BKC	REVISED -	

LASALLE & KENDALL COUNTY
FAS 171(CH 3–MILLINGTON RD) OVER FOX RIVER
STATION 20+00

2000 EXISTING PLANS
STRUCTURE NO. 047-3000

STRUCTURAL SHEET NO. 46 OF 67 SHEETS

FAS RTE.	SECTION	COUNTY	TOTAL SHEETS	SHEET NO.
171	17-00802-00-BR	LASALLE	93	58
	17-00142-00-BR	KENDALL		

WHA# 1087J17 ILLINOIS FED. AID PROJECT WZPE(199) CONTRACT NO. 87683

Benchmark:
Nail in 36" Elm S.E. of Sta. 10+00
EL. 100.00

KENDALL COUNTY
HIGHWAY DEPARTMENT

ROUTE NO.	SECTION	COUNTY	TOTAL SHEETS	SHEET NO.
C.H. F.A.S. 171	94-00036-00-BR	LASALLE & KENDALL	25	8
FED. ROAD DIST. NO. 7	ILLINOIS	FED. AID PROJECT-		

SHEET NO. S1 OF S18 SHEETS

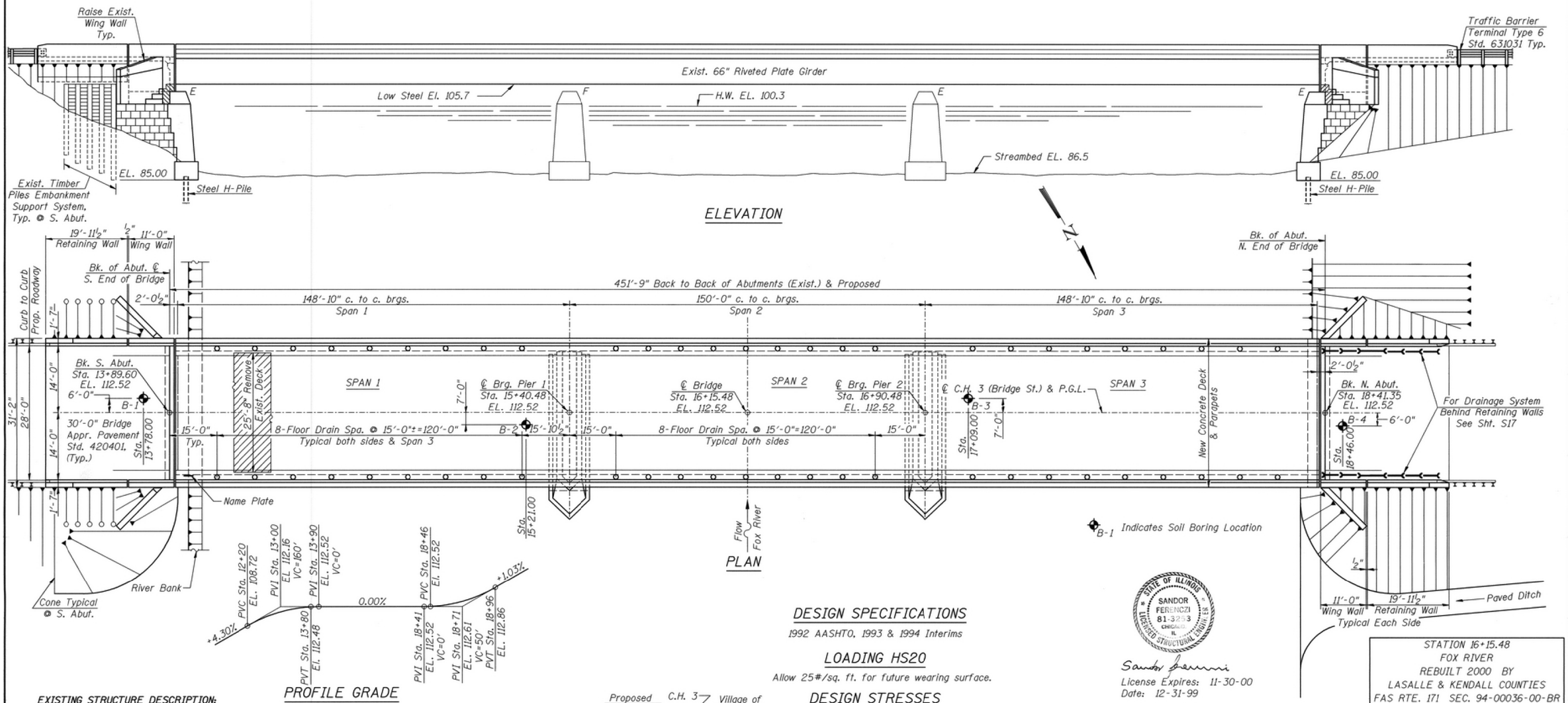

DESIGN SPECIFICATIONS

1992 AASHTO, 1993 & 1994 Interims

LOADING HS20

Allow 25#/sq. ft. for future wearing surface.

DESIGN STRESSES

NEW DECK & REHAB. STRUCTURE

f'c = 3,500 psi
fy = 60,000 psi (Reinf.)
fy = 36,000 psi
(M270 Grade 36 Structural Steel Elements)

EXISTING STRUCTURE

fc = 1,400 psi (Super. & Sub. No Earth Pressure)
fc = 1,000 psi (Sub. with Earth Pressure)
n = 10
fs = 20,000 psi Reinf.
fy = 33,000 psi Struct. (A.S.T.M. A33)

SEISMIC DATA

S.P.C. = "A"
A = 0.043 g
S = 1.0

STATE OF ILLINOIS
SANDOR FERENCZI
81-3253
CHICAGO IL
LICENSED STRUCTURAL ENGINEER

Sandor Ferenczi
License Expires: 11-30-00
Date: 12-31-99

I certify that to the best of my knowledge, information and belief, this bridge design is structurally adequate for the design loading shown on the plans. The design is an economical one for the style of the structure and complies with requirements of the current "AASHTO STANDARD SPECIFICATIONS FOR HIGHWAY BRIDGES".

STATION 16+15.48
FOX RIVER
REBUILT 2000 BY
LASALLE & KENDALL COUNTIES
FAS RTE. 171 SEC. 94-00036-00-BR
F.A. PROJ. BHS-171 (106)
LOADING HS20
STR. NO. 047-3000

NAME PLATE

See Std. 515001

EXISTING STRUCTURE DESCRIPTION:

The existing bridge is a three-span reinforced concrete deck bridge supported by riveted plate girders. The total length back to back of abutments is 451'-9". The spans are: 148'-10", 150'-0" and 148'-10". The out to out width of the structure is 25'-8". The substructure consists of closed masaonry abutments and solid masonry piers supported on spread footings. The structure was built as Millington Bridge, Section B at Sta. 16+15.48 in 1958.
The deck will be replaced and widened and incorporate New Jersey Type Parapet walls. The existing girders will be strengthened and made composite in positive moment areas to provide HS20 capacity. Neoprene expansion joints will also be provided. Abutments and piers will be repaired and widened and new wing walls will be constructed. There will be no salvage.

DESIGNED	LM
CHECKED	SF
DRAWN	CED
CHECKED	LM

DATE: 12-31-99

WATERWAY INFORMATION

Drainage Area ----------1,339,520 Acres
Character Level, Wooded, Cultivated & Swampy
Required Opening (15 yr. flood) 3,525 sq. ft.
Present Opening ---------- 5,180 sq. ft.
Proposed Opening ---------- 5,180 sq. ft.

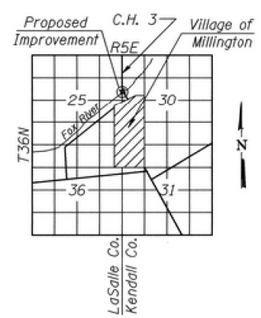

LOCATION SKETCH

FOR INFORMATION ONLY

NAME PLATE
See Std. 515001

GENERAL PLAN & ELEVATION
MILLINGTON BRIDGE OVER
FOX RIVER
SECTION 94-00036-00-BR
LASALLE-KENDALL COUNTIES
STATION 16+15.48
S.N. 047-3000

WILLETT HOFMANN & ASSOCIATES INC
ENGINEERING ARCHITECTURE LAND SURVEYING
809 EAST 2ND STREET, DIXON, IL 61021-0367
T: 815-284-3381 DESIGN FIRM: #184-000918

DESIGNED - BKC	REVISED -		
CHECKED - PLP	REVISED -		
DRAWN - FDL	REVISED -		
CHECKED - BKC	REVISED -		

LASALLE & KENDALL COUNTY
FAS 171(CH 3–MILLINGTON RD) OVER FOX RIVER
STATION 20+00

2000 EXISTING PLANS
STRUCTURE NO. 047-3000
STRUCTURAL SHEET NO. 47 OF 67 SHEETS

FAS RTE.	SECTION	COUNTY	TOTAL SHEETS	SHEET NO.
171	17-00802-00-BR	LASALLE	93	59
	17-00142-00-BR	KENDALL		

WHA* 1087J17 ILLINOIS FED. AID PROJECT WZPE(199) CONTRACT NO. 87683

FILE = S:\PROJECTS\2017\1087J17.KC\DESIGN\CAD_SHEETS\1087J17.2000 Existing Plans.dgn

ROUTE NO.	SECTION	COUNTY	TOTAL SHEETS	SHEET NO.
C.H. F.A.S. 171	94-00036-00-BR	LASALLE & KENDALL	25	9
FED. ROAD DIST. NO. 7		ILLINOIS	FED. AID PROJECT-	

GENERAL NOTES

Fasteners shall be high strength bolts. Bolts $\frac{3}{4}$"Φ. open holes $\frac{13}{16}$"Φ. unless otherwise noted.

Calculated weight of Structural Steel = 12,400 lbs.

Cleaning and painting of the existing structural steel shall be as specified in the Special Provision for "Cleaning and Painting Existing Steel Structures". All existing structural steel within 5 feet of either side of expansion joints shall be cleaned by Method 1. The exterior and the bottom flange of the fascia beams shall be cleaned by Method 3. The aluminum epoxy mastic/acrylic paint system shall be used for painting of existing structural steel. The color of the final finish coat shall be Interstate Green, Munsell No. 7.5G 4/8.

The Inorganic zinc rich primer/Acrylic/Acrylic Paint System shall be used for shop and field painting of new structural steel except where otherwise noted. The color of the final finish coat for all steel surfaces shall be Interstate Green, Munsell No. 7.5G 4/8. See Special Provision for "Cleaning and Painting New Metal Structures".

Field welding of construction accessories will not be permitted to the bottom flange of beams or girders nor to the top flange for a distance equal to one-fourth the span length each way from the pier supports. Field welding in other areas will be permitted only when approved by the Engineer.

Reinforcement bars shall conform to the requirements of AASHTO M-31, M-42 or M-53 Grade 60.

Plan dimensions and details relative to existing structure have been taken from existing plans and are subject to nominal construction variations. It shall be the Contractor's responsibility to verify such dimensions and details in the field and make necessary approved adjustments prior to construction or ordering of materials. Such variations shall not be cause for additional compensation for a change in the scope of the work, however, the Contractor will be paid for the quantity actually furnished at the unit price bid for the work.

Prior to pouring the new concrete for the deck, all loose rust, loose mill scale and all other loose, detrimental foreign material shall be removed from the embedded portions of flanges of beams or girders in contact with concrete. The removal shall be accomplished with appropriate power hand tools. Cost shall be included in "Cleaning and Painting Steel Bridge".

Bridge Seat Sealer shall be applied to the seat area of both abutments.

When the deck pour is stopped for the day at one or more of the Transverse Bonded Construction Joints in the deck Pouring Sequence as shown, the next pour shall not be made until both of the following requirements are met:

1. At least 72 hours shall have elapsed from the end of the previous pour.

2. The concrete strength shall have attained a minimum modulus of rupture of 650 psi or a minimum compressive strength of 3500 psi.

The existing structural steel coating contains lead. The Contractor should take appropriate precautions to deal with the presence of lead on this project.

Quantities for "Formed Concrete Repair" and "Epoxy Crack Sealing" have been inflated to account for deterioration since initial bridge inspection. Areas of repair shall be designated by Engineer.

TOTAL BILL OF MATERIAL

	ITEM	MEASURE	SUPER	SUB	TOTAL
50102400	Concrete Removal	Cu. Yd.	-	23.2	23.2
50104100	Bridge Handrail Removal	Foot	904	-	904
50104800	Removal of Existing Concrete Deck	L. Sum	1	-	1
50200100	Structure Excavation	Cu. Yd.	-	268	268
50300100	Floor Drains	Each	54	-	54
50300150	Neoprene Expansion Joint 2"	Foot	30	-	30
50300160	Neoprene Expansion Joint 4"	Foot	30	-	30
50300225	Concrete Structures	Cu. Yd.	-	141.5	141.5
50300255	Concrete Superstructure	Cu. Yd.	492.2	-	492.2
50300260	Bridge Deck Grooving	Sq. Yd.	1,398	-	1,398
* 50300300	Protective Coat	Sq. Yd.	1,766	-	1,766
50301250	Formed Concrete Repair (Depth Greater Than 5")	Sq. Ft.	-	128	128
50500105	Furnishing and Erecting Structural Steel	L. Sum	1		1
50500505	Stud Shear Connecters	Each	3,664		3,664
50500715	Jack and Remove Existing Bearings	Each	16	-	16
50600300	Cleaning and Painting Steel Bridge	L. Sum	1	-	1
50606200	Blasting Residue Containment and Disposal	L. Sum	1	-	1
50606300	Power Tool Cleaning Residue Containment and Disposal	L. Sum	1	-	1
50800205	Reinforcement Bars, Epoxy Coated	Pound	119,860	12,920	132,780
51201400	Furnishing Steel Piles HP10x42	Foot	-	228	228
51202700	Driving Steel Piles	Foot	-	228	228
51500100	Name Plates	Each	1	-	1
58700200	Bridge Seat Sealer	Sq. Ft.	-	159	159
59000100	Epoxy Crack Sealing	Foot	-	38	38
60107700	Pipe Underdrains 6"	Foot	-	122	122
X0322001	Stone Masonry Tuck Pointing	Foot	-	107	107
	Floating Bearings, Fixed	Each	4	-	4
	Floating Bearings, Guided Expansion	Each	12	-	12

*Quantity is for top of deck and top and vertical faces of parapets

FOR INFORMATION ONLY

GENERAL NOTES &
TOTAL BILL OF MATERIAL
MILLINGTON BRIDGE OVER
FOX RIVER
SECTION 94-00036-00-BR
LASALLE-KENDALL COUNTIES
STATION 16+15.48
S.N. 047-3000

DESIGNED	LM
CHECKED	SF
DRAWN	CED
CHECKED	LM

DATE: 12-31-99

WILLETT HOFMANN & ASSOCIATES INC
ENGINEERING ARCHITECTURE LAND SURVEYING
809 EAST 2ND STREET, DIXON, IL 61021-0367
T: 815-284-3381 DESIGN FIRM: #184-000918

DESIGNED - BKC	REVISED -	LASALLE & KENDALL COUNTY	2000 EXISTING PLANS
CHECKED - PLP	REVISED -	FAS 171(CH 3–MILLINGTON RD) OVER FOX RIVER	STRUCTURE NO. 047-3000
DRAWN - FDL	REVISED -	STATION 20+00	STRUCTURAL SHEET NO. 48 OF 67 SHEETS
CHECKED - BKC	REVISED -		

FAS RTE.	SECTION	COUNTY	TOTAL SHEETS	SHEET NO.
171	17-00802-00-BR	LASALLE	93	60
	17-00142-00-BR	KENDALL		

WHA* 1087J17 ILLINOIS FED. AID PROJECT WZPE(199) CONTRACT NO. 87683

FILE = S:\PROJECTS\2017\1087J17.KCH\DESIGN\CAD_SHEETS\1087J17_2000 Existing Plans.dgn

KENDALL COUNTY
HIGHWAY DEPARTMENT

ROUTE NO.	SECTION	COUNTY	TOTAL SHEETS	SHEET NO.
C.H. F.A.S. 171	94-00036-00-BR	LASALLE & KENDALL	25	10
FED. ROAD DIST. NO. 7	ILLINOIS	FED. AID PROJECT-		

SHEET NO. S3 OF S18 SHEETS

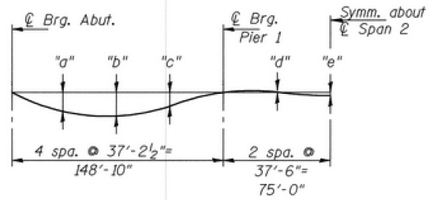

DEAD LOAD DEFLECTION DIAGRAM

(Includes weight of concrete only)

Note: The above deflections are not to be used in the field if the engineer is working from the grade elevations adjusted for dead load deflections as shown on sheet S4.

DEFLECTION TABLE

Location / Beam	"a"	"b"	"c"	"d"	"e"
1 and 4	2 1/16"	2 9/16"	1 7/16"	0"	3/8"
2 and 3	1 3/4"	2 3/16"	1 1/4"	0"	5/16"

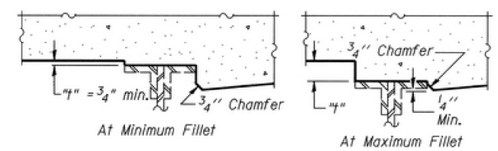

To determine "t": Elevations of the top flanges of the existing girders shall be taken at intervals shown below. These elevations subtracted from the "Theoretical Grade Elevations Adjusted for Dead Load Deflection" shown on sheet S4 minus slab thickness. equals the fillet heights "t" above top flange ofthe girders.

FILLET HEIGHTS

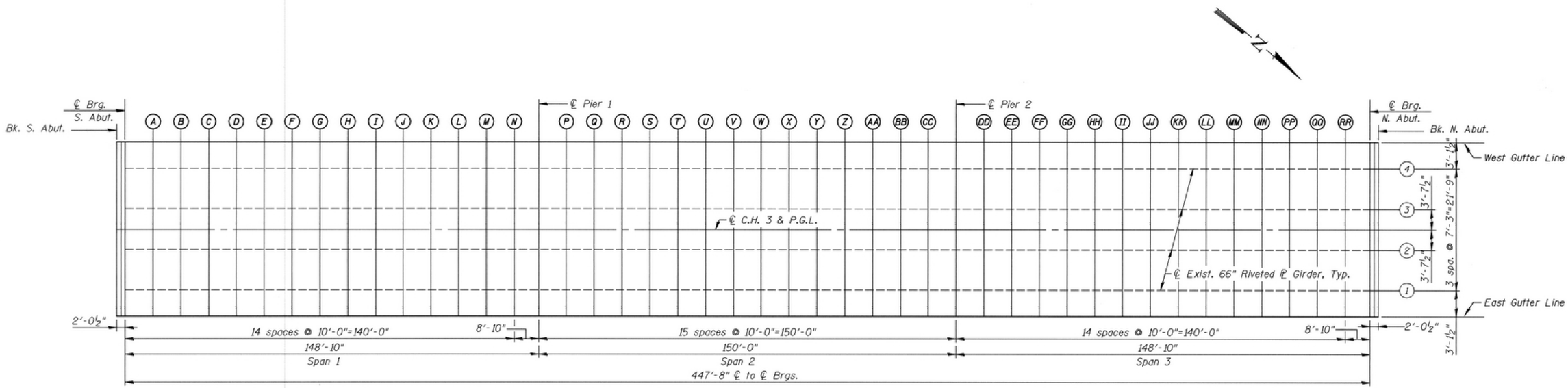

PLAN

DESIGNED	BLU
CHECKED	SF
DRAWN	CSL
CHECKED	LM

DATE: 12-31-99

FOR INFORMATION ONLY

DECK ELEVATION LAYOUT
MILLINGTON BRIDGE OVER
FOX RIVER
SECTION 94-00036-00-BR
LASALLE-KENDALL COUNTIES
STATION 16+15.48
S.N. 047-3000

WILLETT HOFMANN & ASSOCIATES INC
ENGINEERING ARCHITECTURE LAND SURVEYING
809 EAST 2ND STREET, DIXON, IL 61021-0367
T: 815-284-3381 DESIGN FIRM: #184-000918

DESIGNED - BKC	REVISED -	LASALLE & KENDALL COUNTY FAS 171(CH 3–MILLINGTON RD) OVER FOX RIVER STATION 20+00	2000 EXISTING PLANS STRUCTURE NO. 047-3000
CHECKED - PLP	REVISED -		
DRAWN - FDL	REVISED -		
CHECKED - BKC	REVISED -		STRUCTURAL SHEET NO. 49 OF 67 SHEETS

FAS RTE.	SECTION	COUNTY	TOTAL SHEETS	SHEET NO.
171	17-00802-00-BR	LASALLE	93	61
	17-00142-00-BR	KENDALL		

WHA* 1087J17 | ILLINOIS | FED. AID PROJECT WZPE(199) | CONTRACT NO. 87683

FILE = S:\PROJECTS\2017\1087J17.KCH\DESIGN\CAD_SHEETS\1087J17_2000 Existing Plans.dgn

KENDALL COUNTY
HIGHWAY DEPARTMENT

WEST GUTTER LINE

(East Gutter Line similar except Offset = 14.000)

Location	Station	Offset	Theoretical Grade Elevations	Theoretical Grade Elevations Adjusted For Dead Load Deflection
BK. S. ABUT.	1389.60	-14.000	112.291	112.291
℄ BRG. S. ABUT.	1391.64	-14.000	112.291	112.291
A	1401.64	-14.000	112.291	112.331
B	1411.64	-14.000	112.291	112.397
C	1421.64	-14.000	112.291	112.439
D	1431.64	-14.000	112.291	112.471
E	1441.64	-14.000	112.291	112.494
F	1451.64	-14.000	112.291	112.506
G	1461.64	-14.000	112.291	112.507
H	1471.64	-14.000	112.291	112.498
I	1481.64	-14.000	112.291	112.480
J	1491.64	-14.000	112.291	112.453
K	1501.64	-14.000	112.291	112.418
L	1511.64	-14.000	112.291	112.379
M	1521.64	-14.000	112.291	112.342
N	1531.64	-14.000	112.291	112.311
℄ PIER 1	1540.48	-14.000	112.291	112.291
P	1550.48	-14.000	112.291	112.279
Q	1560.48	-14.000	112.291	112.277
R	1570.48	-14.000	112.291	112.283
S	1580.48	-14.000	112.291	112.295
T	1590.48	-14.000	112.291	112.307
U	1600.48	-14.000	112.291	112.316
V	1610.48	-14.000	112.291	112.323
W	1620.48	-14.000	112.291	112.323
X	1630.48	-14.000	112.291	112.316
Y	1640.48	-14.000	112.291	112.307
Z	1650.48	-14.000	112.291	112.295
AA	1660.48	-14.000	112.291	112.283
BB	1670.48	-14.000	112.291	112.277
CC	1680.48	-14.000	112.291	112.279
℄ PIER 2	1690.48	-14.000	112.291	112.291
DD	1700.48	-14.000	112.291	112.314
EE	1710.48	-14.000	112.291	112.346
FF	1720.48	-14.000	112.291	112.383
GG	1730.48	-14.000	112.291	112.423
HH	1740.48	-14.000	112.291	112.456
II	1750.48	-14.000	112.291	112.482
JJ	1760.48	-14.000	112.291	112.500
KK	1770.48	-14.000	112.291	112.508
LL	1780.48	-14.000	112.291	112.506
MM	1790.48	-14.000	112.291	112.492
NN	1800.48	-14.000	112.291	112.468
PP	1810.48	-14.000	112.291	112.435
QQ	1820.48	-14.000	112.291	112.391
RR	1830.48	-14.000	112.291	112.341
℄ BRG. N. ABUT.	1839.31	-14.000	112.291	112.291
BK. N. ABUT.	1841.35	-14.000	112.291	112.291

℄ GIRDER 4

(℄ Girder 1 similar except Offset = 10.875)

Location	Station	Offset	Theoretical Grade Elevations	Theoretical Grade Elevations Adjusted For Dead Load Deflection
BK. S. ABUT.	1389.60	-10.875	112.350	112.350
℄ BRG. S. ABUT.	1391.64	-10.875	112.350	112.350
A	1401.64	-10.875	112.350	112.390
B	1411.64	-10.875	112.350	112.456
C	1421.64	-10.875	112.350	112.498
D	1431.64	-10.875	112.350	112.530
E	1441.64	-10.875	112.350	112.553
F	1451.64	-10.875	112.350	112.565
G	1461.64	-10.875	112.350	112.566
H	1471.64	-10.875	112.350	112.557
I	1481.64	-10.875	112.350	112.539
J	1491.64	-10.875	112.350	112.512
K	1501.64	-10.875	112.350	112.477
L	1511.64	-10.875	112.350	112.438
M	1521.64	-10.875	112.350	112.401
N	1531.64	-10.875	112.350	112.370
℄ PIER 1	1540.48	-10.875	112.350	112.350
P	1550.48	-10.875	112.350	112.338
Q	1560.48	-10.875	112.350	112.336
R	1570.48	-10.875	112.350	112.342
S	1580.48	-10.875	112.350	112.354
T	1590.48	-10.875	112.350	112.366
U	1600.48	-10.875	112.350	112.375
V	1610.48	-10.875	112.350	112.382
W	1620.48	-10.875	112.350	112.382
X	1630.48	-10.875	112.350	112.375
Y	1640.48	-10.875	112.350	112.366
Z	1650.48	-10.875	112.350	112.354
AA	1660.48	-10.875	112.350	112.342
BB	1670.48	-10.875	112.350	112.336
CC	1680.48	-10.875	112.350	112.338
℄ PIER 2	1690.48	-10.875	112.350	112.350
DD	1700.48	-10.875	112.350	112.373
EE	1710.48	-10.875	112.350	112.405
FF	1720.48	-10.875	112.350	112.462
GG	1730.48	-10.875	112.350	112.482
HH	1740.48	-10.875	112.350	112.515
II	1750.48	-10.875	112.350	112.541
JJ	1760.48	-10.875	112.350	112.559
KK	1770.48	-10.875	112.350	112.567
LL	1780.48	-10.875	112.350	112.565
MM	1790.48	-10.875	112.350	112.551
NN	1800.48	-10.875	112.350	112.527
PP	1810.48	-10.875	112.350	112.494
QQ	1820.48	-10.875	112.350	112.450
RR	1830.48	-10.875	112.350	112.400
℄ BRG. N. ABUT.	1839.31	-10.875	112.350	112.350
BK. N. ABUT.	1841.35	-10.875	112.350	112.350

℄ GIRDER 3

(℄ Girder 2 similar except Offset = 3.625)

Location	Station	Offset	Theoretical Grade Elevations	Theoretical Grade Elevations Adjusted For Dead Load Deflection
BK. S. ABUT.	1389.60	-3.625	112.463	112.463
℄ BRG. S. ABUT.	1391.64	-3.625	112.463	112.463
A	1401.64	-3.625	112.463	112.510
B	1411.64	-3.625	112.463	112.552
C	1421.64	-3.625	112.463	112.587
D	1431.64	-3.625	112.463	112.615
E	1441.64	-3.625	112.463	112.634
F	1451.64	-3.625	112.463	112.645
G	1461.64	-3.625	112.463	112.645
H	1471.64	-3.625	112.463	112.638
I	1481.64	-3.625	112.463	112.623
J	1491.64	-3.625	112.463	112.599
K	1501.64	-3.625	112.463	112.570
L	1511.64	-3.625	112.463	112.537
M	1521.64	-3.625	112.463	112.506
N	1531.64	-3.625	112.463	112.480
℄ PIER 1	1540.48	-3.625	112.463	112.463
P	1550.48	-3.625	112.463	112.453
Q	1560.48	-3.625	112.463	112.451
R	1570.48	-3.625	112.463	112.455
S	1580.48	-3.625	112.463	112.466
T	1590.48	-3.625	112.463	112.477
U	1600.48	-3.625	112.463	112.486
V	1610.48	-3.625	112.463	112.490
W	1620.48	-3.625	112.463	112.490
X	1630.48	-3.625	112.463	112.486
Y	1640.48	-3.625	112.463	112.477
Z	1650.48	-3.625	112.463	112.466
AA	1660.48	-3.625	112.463	112.455
BB	1670.48	-3.625	112.463	112.451
CC	1680.48	-3.625	112.463	112.453
℄ PIER 2	1690.48	-3.625	112.463	112.463
DD	1700.48	-3.625	112.463	112.483
EE	1710.48	-3.625	112.463	112.510
FF	1720.48	-3.625	112.463	112.541
GG	1730.48	-3.625	112.463	112.574
HH	1740.48	-3.625	112.463	112.602
II	1750.48	-3.625	112.463	112.624
JJ	1760.48	-3.625	112.463	112.639
KK	1770.48	-3.625	112.463	112.646
LL	1780.48	-3.625	112.463	112.644
MM	1790.48	-3.625	112.463	112.632
NN	1800.48	-3.625	112.463	112.613
PP	1810.48	-3.625	112.463	112.584
QQ	1820.48	-3.625	112.463	112.548
RR	1830.48	-3.625	112.463	112.505
℄ BRG. N. ABUT.	1839.31	-3.625	112.463	112.463
BK. N. ABUT.	1841.35	-3.625	112.463	112.463

℄ C.H. 3 & P.G.L.

Location	Station	Offset	Theoretical Grade Elevations	Theoretical Grade Elevations Adjusted For Dead Load Deflection
BK. S. ABUT.	1389.60	0.000	112.520	112.520
℄ BRG. S. ABUT.	1391.64	0.000	112.520	112.520
A	1401.64	0.000	112.520	112.567
B	1411.64	0.000	112.520	112.609
C	1421.64	0.000	112.520	112.644
D	1431.64	0.000	112.520	112.672
E	1441.64	0.000	112.520	112.691
F	1451.64	0.000	112.520	112.702
G	1461.64	0.000	112.520	112.702
H	1471.64	0.000	112.520	112.695
I	1481.64	0.000	112.520	112.680
J	1491.64	0.000	112.520	112.656
K	1501.64	0.000	112.520	112.627
L	1511.64	0.000	112.520	112.594
M	1521.64	0.000	112.520	112.563
N	1531.64	0.000	112.520	112.537
℄ PIER 1	1540.48	0.000	112.520	112.520
P	1550.48	0.000	112.520	112.510
Q	1560.48	0.000	112.520	112.508
R	1570.48	0.000	112.520	112.512
S	1580.48	0.000	112.520	112.523
T	1590.48	0.000	112.520	112.534
U	1600.48	0.000	112.520	112.543
V	1610.48	0.000	112.520	112.547
W	1620.48	0.000	112.520	112.547
X	1630.48	0.000	112.520	112.543
Y	1640.48	0.000	112.520	112.534
Z	1650.48	0.000	112.520	112.523
AA	1660.48	0.000	112.520	112.512
BB	1670.48	0.000	112.520	112.508
CC	1680.48	0.000	112.520	112.510
℄ PIER 2	1690.48	0.000	112.520	112.520
DD	1700.48	0.000	112.520	112.540
EE	1710.48	0.000	112.520	112.567
FF	1720.48	0.000	112.520	112.598
GG	1730.48	0.000	112.520	112.631
HH	1740.48	0.000	112.520	112.659
II	1750.48	0.000	112.520	112.681
JJ	1760.48	0.000	112.520	112.696
KK	1770.48	0.000	112.520	112.703
LL	1780.48	0.000	112.520	112.701
MM	1790.48	0.000	112.520	112.689
NN	1800.48	0.000	112.520	112.670
PP	1810.48	0.000	112.520	112.641
QQ	1820.48	0.000	112.520	112.605
RR	1830.48	0.000	112.520	112.562
℄ BRG. N. ABUT.	1839.31	0.000	112.520	112.520
BK. N. ABUT.	1841.35	0.000	112.520	112.520

FOR INFORMATION ONLY

DECK ELEVATIONS
MILLINGTON BRIDGE OVER
FOX RIVER
SECTION 94-00036-00-BR
LASALLE-KENDALL COUNTIES
STATION 16+15.48
S.N. 047-3000

DESIGNED	BLU
CHECKED	SF
DRAWN	BLU
CHECKED	LM

DATE: 12-31-99

WILLETT HOFMANN & ASSOCIATES INC
ENGINEERING ARCHITECTURE LAND SURVEYING
809 EAST 2ND STREET, DIXON, IL 61021-0367
T: 815-284-3381 DESIGN FIRM: #184-000918

DESIGNED - BKC	REVISED -	LASALLE & KENDALL COUNTY FAS 171(CH 3–MILLINGTON RD) OVER FOX RIVER STATION 20+00	2000 EXISTING PLANS STRUCTURE NO. 047-3000
CHECKED - PLP	REVISED -		
DRAWN - FDL	REVISED -		
CHECKED - BKC	REVISED -		STRUCTURAL SHEET NO. 50 OF 67 SHEETS

FAS RTE.	SECTION	COUNTY	TOTAL SHEETS	SHEET NO.
171	17-00802-00-BR	LASALLE	93	62
	17-00142-00-BR	KENDALL		

WHA* 1087J17 ILLINOIS FED. AID PROJECT WZPE(199) CONTRACT NO. 87683

FILE = S:\PROJECTS\2017\1087J17_KCH\DESIGN\CAD_SHEETS\1087J17_2000 Existing Plans.dgn

ROUTE NO.	SECTION	COUNTY	TOTAL SHEETS	SHEET NO.
C.H. F.A.S.171	94-00036-00-BR	LASALLE & KENDALL	25	12
FED. ROAD DIST. NO. 7	ILLINOIS	FED. AID PROJECT-		

SHEET NO. S5 OF S18 SHEETS

KENDALL COUNTY
HIGHWAY DEPARTMENT

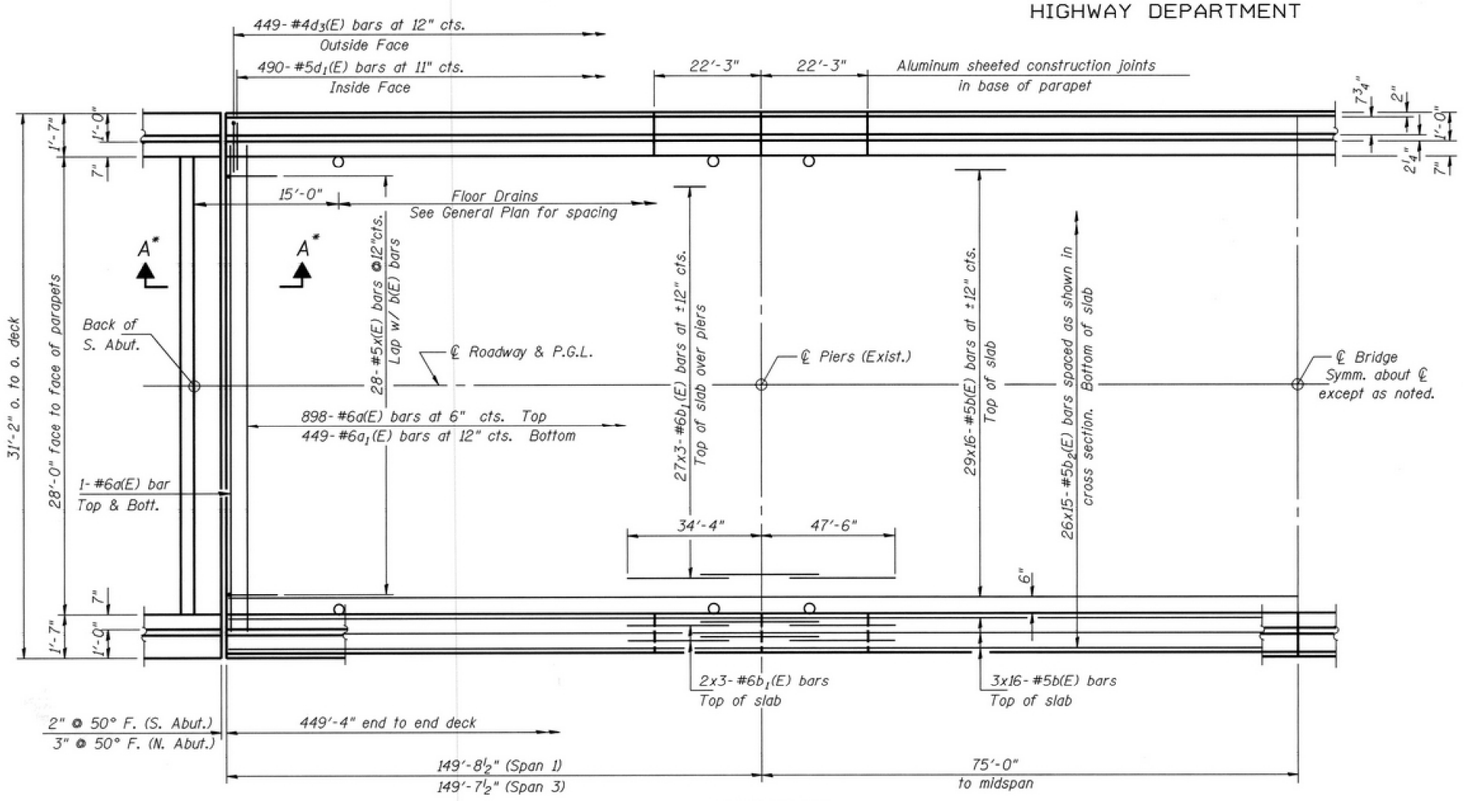

HALF PLAN

* See Sheet S6 of S18

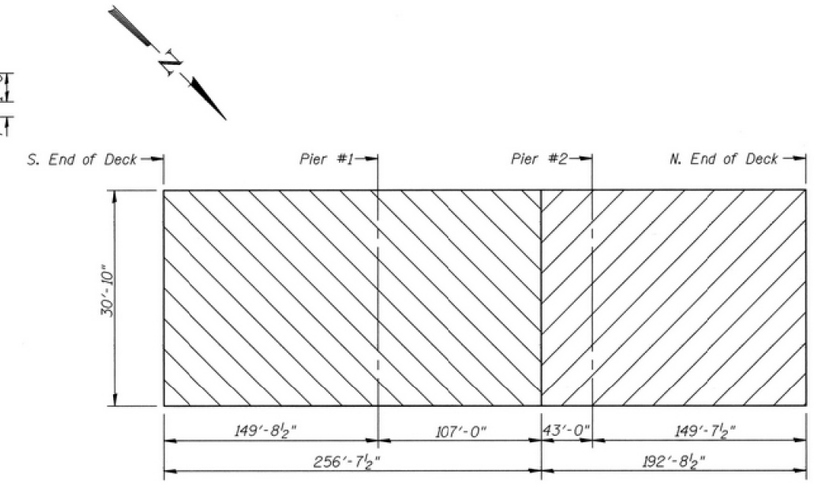

POUR I=208 CU. YD. POUR II=156 CU. YD.

DECK POURING SEQUENCE

Pouring sequence may be waved provided that the contractor sets 2 crews and starts pours from the center of the bridge.

MIN. BAR LAP

#5 - 2'-2"
#6 - 2'-7"
#8 - 4'-6"

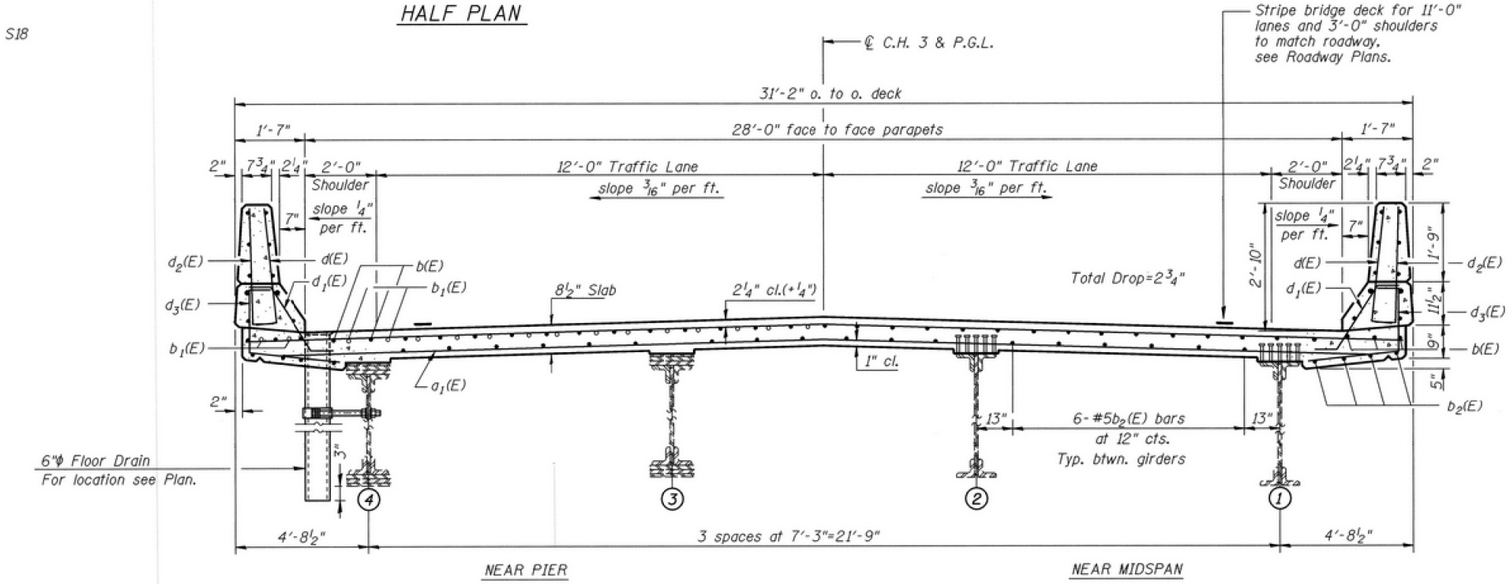

CROSS SECTION
(Looking North)

Notes: See Sheet S6 of S18 for superstructure details and Bill of Material.
Reinforcement bars designated (E) shall be epoxy coated.
Bars indicated thus 29 x 16-#5 etc. indicates 29 lines of bars with 16 lengths per line.
See Sheet S6 of S18 for parapet reinforcement.

FOR INFORMATION ONLY

DECK PLAN & SECTION
MILLINGTON BRIDGE OVER
FOX RIVER
SECTION 94-00036-00-BR
LASALLE-KENDALL COUNTIES
STATION 16+15.48
S.N. 047-3000

DESIGNED	LM
CHECKED	SF
DRAWN	CED
CHECKED	LM

DATE: 12-31-99

FILE = S:\PROJECTS\2017\1087J17.KC\DESIGN\CAD_SHEETS\1087J17_2000 Existing Plans.dgn

WILLETT HOFMANN & ASSOCIATES INC
ENGINEERING ARCHITECTURE LAND SURVEYING
809 EAST 2ND STREET, DIXON, IL 61021-0367
T: 815-284-3381 DESIGN FIRM: #184-000918

DESIGNED - BKC	REVISED -	LASALLE & KENDALL COUNTY	2000 EXISTING PLANS
CHECKED - PLP	REVISED -	FAS 171(CH 3–MILLINGTON RD) OVER FOX RIVER	STRUCTURE NO. 047-3000
DRAWN - FDL	REVISED -	STATION 20+00	STRUCTURAL SHEET NO. 51 OF 67 SHEETS
CHECKED - BKC	REVISED -		

FAS RTE.	SECTION	COUNTY	TOTAL SHEETS	SHEET NO.
171	17-00802-00-BR	LASALLE	93	63
	17-00142-00-BR	KENDALL		

WHA* 1087J17 ILLINOIS FED. AID PROJECT WZPE(199) CONTRACT NO. 87683

KENDALL COUNTY
HIGHWAY DEPARTMENT

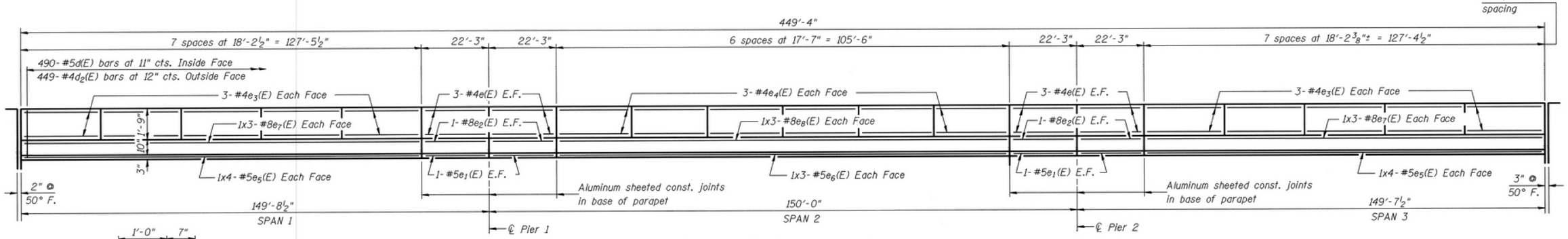

INSIDE ELEVATION OF PARAPET
Looking West

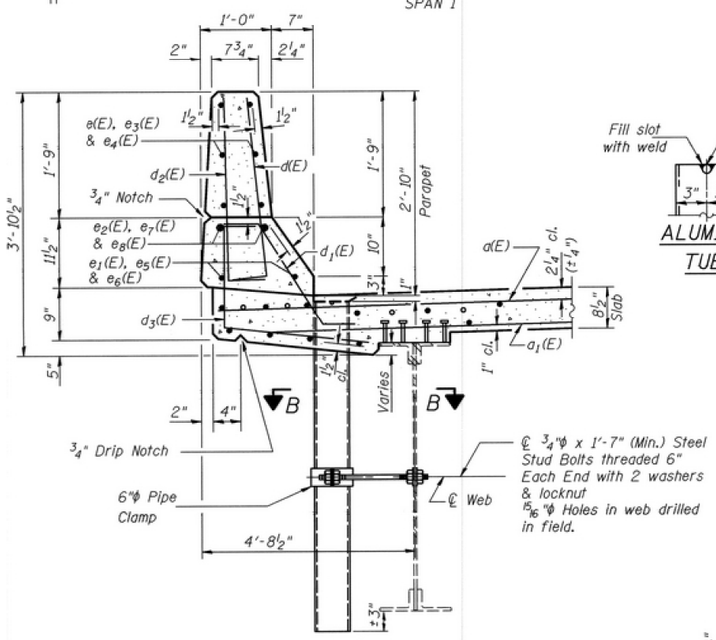

SECTION THRU PARAPET

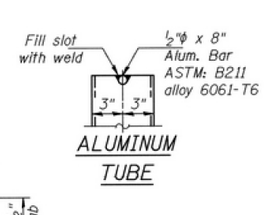

ALUMINUM TUBE

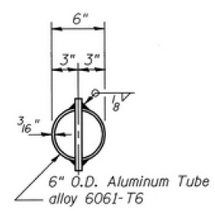

TOP PLAN

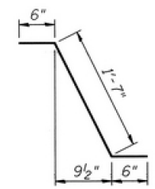

BAR d1(E)

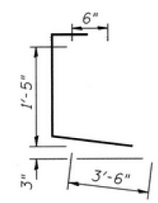

BAR d3(E)

SUPERSTRUCTURE BILL OF MATERIAL

Bar	No.	Size	Length	Shape
a(E)	902	#6	30'-4"	
a1(E)	449	#6	28'-4"	
b(E)	560	#5	30'-1"	
b1(E)	186	#6	29'-0"	
b2(E)	390	#5	32'-0"	
d(E)	980	#5	3'-0"	
d1(E)	980	#5	2'-7"	
d2(E)	898	#4	3'-0"	
d3(E)	898	#4	5'-5"	
e(E)	48	#4	22'-0"	
e1(E)	16	#5	22'-0"	
e2(E)	16	#8	22'-0"	
e3(E)	120	#4	17'-10"	
e4(E)	72	#4	17'-3"	
e5(E)	32	#5	33'-6"	
e6(E)	12	#5	36'-6"	
e7(E)	24	#8	45'-4"	
e8(E)	12	#8	38'-1"	
x(E)	56	#5	4'-1"	
Reinforcement Bars, Epoxy Coated			Lbs.	119,860
Concrete Superstructure			Cu. Yds.	492.2
Neoprene Expansion Joint 2"			Foot	30
Neoprene Expansion Joint 4"			Foot	30
Floor Drains			Each	54

Reinforcement bars designated (E) shall be epoxy coated.
Bars indicated thus 1 x 2-#5 etc. indicates 1 line of bars with 2 lengths per line.

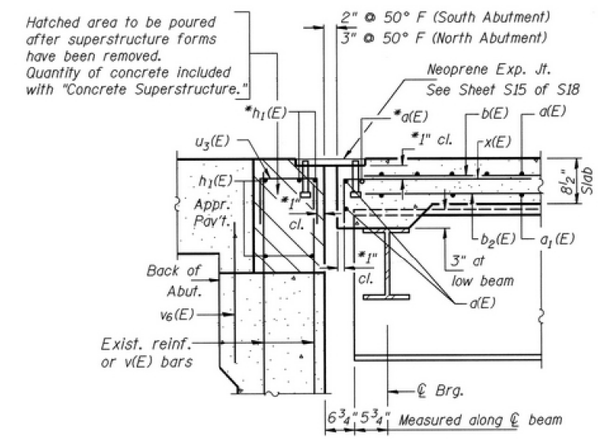

SECTION A-A AT NEOPRENE EXPANSION JOINT
See Sheet S5 of S18

*Place a(E) and h1(E) bars in back of anchor bolts as shown if required to maintain 1" cl. (+0-⅛"). Anchor bolts should be tied to a(E) and h(E) bars.

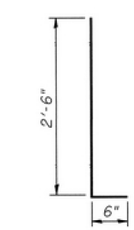

BARS d(E) & d2(E)

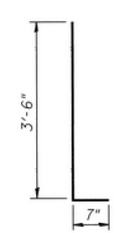

BAR x(E)

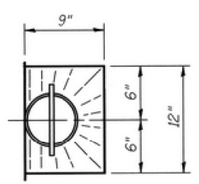

TOP PLAN

* Dimension as required by Pipe Clamp

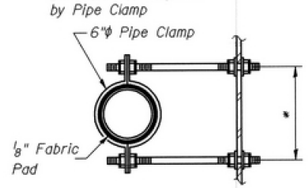

SECTION B-B

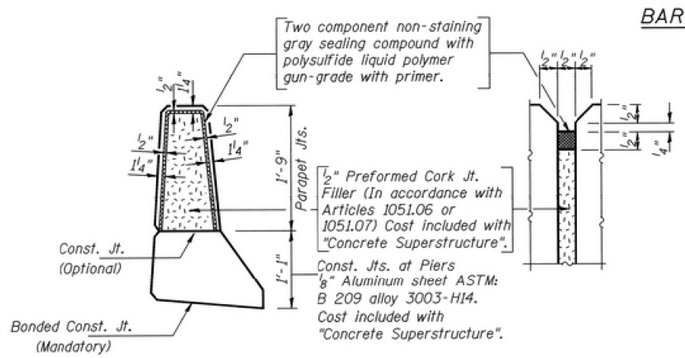

PARAPET JOINT DETAILS

Notes:
The exterior surfaces of the Floor Drain shall be painted with the vinyl enamel coat painting specified for Structural Steel. The exterior surface of the Aluminum tube shall be cleaned and given a washcoat pretreatment in accordance with Steel Structures Painting Council's Spec. SSPC-SP1 & SSPC-Paint 27 prior to painting.

DESIGNED	BLU
CHECKED	SF
DRAWN	CSL
CHECKED	BLU

DATE: 12-31-99

MIN. BAR LAP

#5 - 2'-2"
#6 - 2'-7"
#8 - 4'-6"

FOR INFORMATION ONLY

SUPERSTRUCTURE DETAILS
MILLINGTON BRIDGE OVER
FOX RIVER
SECTION 94-00036-00-BR
LASALLE-KENDALL COUNTIES
STATION 16+15.48
S.N. 047-3000

KENDALL COUNTY
HIGHWAY DEPARTMENT

ROUTE NO.	SECTION	COUNTY	TOTAL SHEETS	SHEET NO.
C.H. F.A.S. 171	94-00036-00-BR	LASALLE & KENDALL	25	14
FED. ROAD DIST. NO. 7	ILLINOIS	FED. AID PROJECT-		

SHEET NO. S7 OF S18 SHEETS

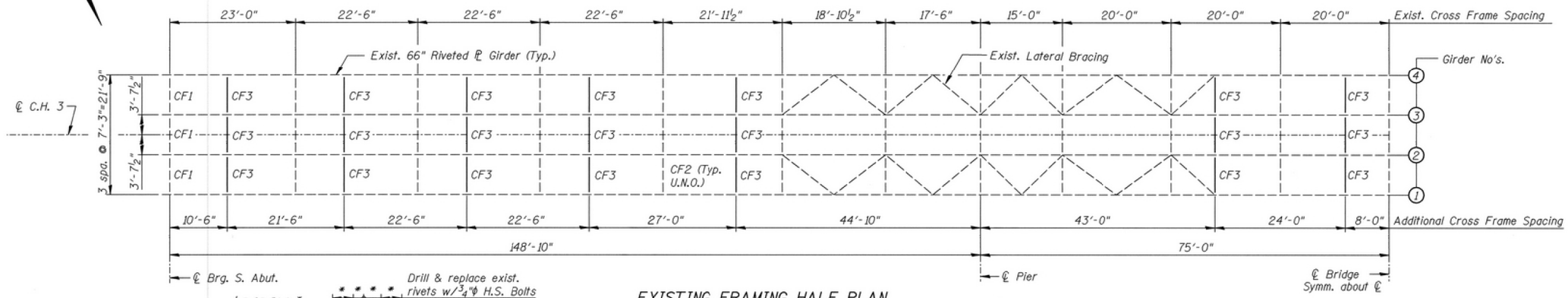

EXISTING FRAMING HALF PLAN

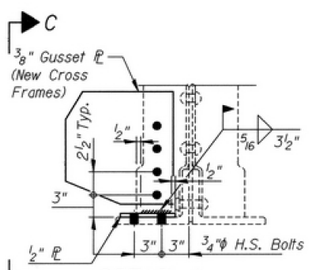

DETAIL A

Cross Frame CF3 (in areas w/ out cover plates) shown
Cross Frame CF2 similar as noted

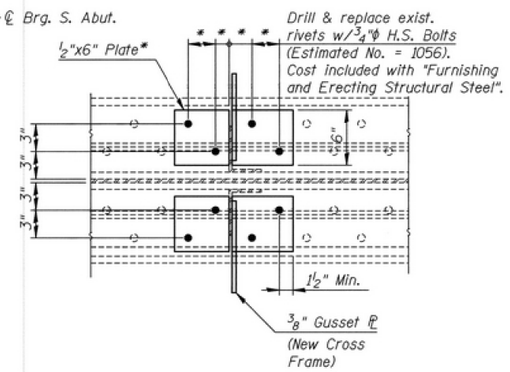

VIEW D-D

Cross Frame CF3 (in areas with cover plates) shown
Cross Frame CF2 similar as noted

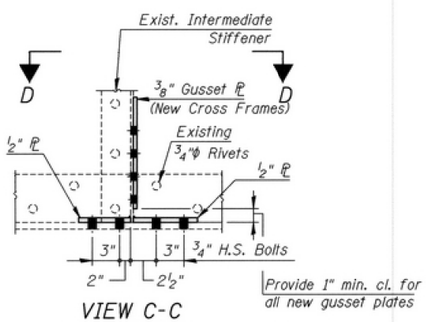

VIEW C-C

Cross Frame CF3 (in areas w/ out cover plates) shown
Cross Frame CF2 similar as noted

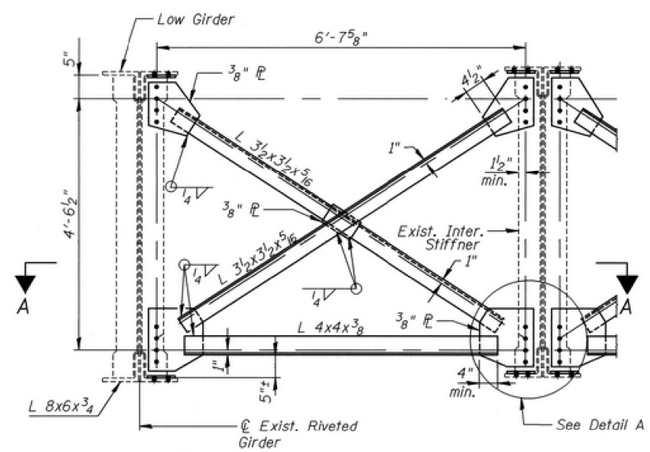

NEW CROSS FRAME CF3

(No. Req'd = 42)

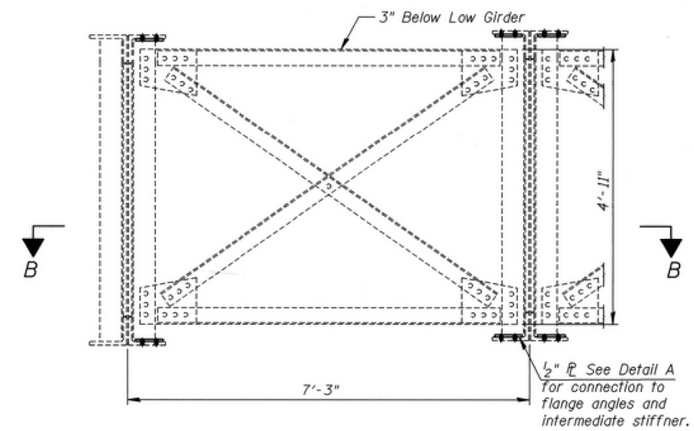

REHABILITATION OF EXIST. CROSS FRAME CF2

(No. Req'd = 63)

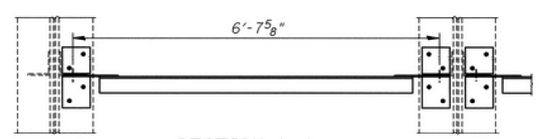

SECTION A-A

SECTION B-B

GENERAL NOTES FOR NEW & EXISTING CROSS FRAMES:

1. Cross Frame CF3 shall be shop fabricated insuring adequate clearence between existing flange angles and new gusset plates is provided as shown.

2. Holes for gusset plates of Cross Frame CF3 shall be field drilled in existing intermediate stiffners to insure proper fit.

3. Provide ½"x6"x7" lg. plates on each side of intermediate stiffners top & bottom for Cross Frames CF2 & CF3 in areas without cover plates. Field bolt plates to flange angles and then field weld to stiffener. Plates for Cross Frame CF3 shall be installed before cross frame is erected.

4. Provide ½"x6" plates on each side of intermediate stiffners for Cross Frames CF2 & CF3 in regions with cover plates. The length of each plate shall be determined by Contractor after field measurements of the existing rivet spacing (*) are made. Plates must be field bolted to flange angles and field welded to stiffeners before erection of new cross frames.

5. A ½"x6"x9" plate was assumed for plates with unknown length in order to calculate weight of structural steel.

6. Cost for field drilling and bolting is included in the cost of "Furnishing and Erecting Structural Steel".

7. Areas of existing structural steel which shall be in contact with new steel shall be cleaned by Method 2 prior to erection of new steel. Cleaning of the existing structural steel shall be as specified by the Special Provision for "Cleaning and Painting Existing Steel Structures".

Notes:

All structural steel on sheet S7 shall be M270 Grade 36 unless noted otherwise.

All ¾"φ bolts for the gusset plates of cross frame CF3 shall have 15/16"φ holes all other ¾"φ bolts shall have 13/16"φ holes.

Two hardened washers shall be required over all oversized holes.

FOR INFORMATION ONLY

FRAMING PLAN
MILLINGTON BRIDGE OVER
FOX RIVER
SECTION 94-00036-00-BR
LASALLE-KENDALL COUNTIES
STATION 16+15.48
S.N. 047-3000

DESIGNED	BLU	
CHECKED	SF	
DRAWN	CSL	
CHECKED	LM	

DATE: 12-31-99

WILLETT HOFMANN & ASSOCIATES INC
ENGINEERING ARCHITECTURE LAND SURVEYING
809 EAST 2ND STREET, DIXON, IL 61021-0367
T: 815-284-3381 DESIGN FIRM: #184-000918

DESIGNED - BKC	REVISED -		
CHECKED - PLP	REVISED -		
DRAWN - FDL	REVISED -		
CHECKED - BKC	REVISED -		

LASALLE & KENDALL COUNTY
FAS 171(CH 3–MILLINGTON RD) OVER FOX RIVER
STATION 20+00

2000 EXISTING PLANS
STRUCTURE NO. 047-3000
STRUCTURAL SHEET NO. 53 OF 67 SHEETS

FAS RTE.	SECTION	COUNTY	TOTAL SHEETS	SHEET NO.
171	17-00802-00-BR	LASALLE	93	65
	17-00142-00-BR	KENDALL		

WHA* 1087J17 | ILLINOIS | FED. AID PROJECT WZPE(199) | CONTRACT NO. 87683

FILE = S:\PROJECTS\2017\1087J17.KCH\DESIGN\CAD.SHEETS\1087J17.2000 Existing Plans.dgn

ROUTE NO.	SECTION	COUNTY	TOTAL SHEETS	SHEET NO.
C.H. F.A.S. 171	94-00036-00-BR	LASALLE & KENDALL	25	15
FED. ROAD DIST. NO. 7	ILLINOIS	FED. AID PROJECT-		

SHEET NO. S8 OF S18 SHEETS

KENDALL COUNTY
HIGHWAY DEPARTMENT

*THEORETICAL TOP OF FLANGE ANGLES ELEVATION AFTER REMOVAL OF EXIST. CONC. DECK

Girder No.	S. & N. Abut. & Pier 1 & 2	℄ Shop Splice in End Spans	℄ Field Splice in End Spans	Both ℄ Field Splices in Center Span
1 & 4	111.414	111.591	111.517	111.440
2 & 3	111.497	111.674	111.6	111.637

*Top of Flange Angles Elevations are adopted from Existing Plans. Elevations at all Splices have been adjusted for Structural Steel Deflection.

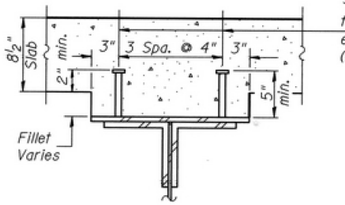

¾"φ Granular or solid flux filled headed studs. Automatically end welded to flange. (916/Girder Req'd.)

Is and Ss are the moment of inertia and section modulus of the steel section used in computing fs (Total & Overload).

Ic(n) and Sc(n) are the moment of inertia and section modulus of the composite section used in computing stresses due to Live Load.

Ic(3n) and Sc(3n) are the moment of inertia and section modulus of the composite section used in computing stresses due to superimposed dead loads. (see AASHTO 10.38)

VR is the maximum Live Load + Impact shear range in span.

Z is the plastic section modulus used to determine the fully plastic moments in the non-composite areas.

Ma (Applied Moment)=1.3[M℘ + Ms℘ + ⅝(M℄ + M(Imp))].

The Plastic Moment capacity (Mu) is computed according to AASHTO 10.48.1 and 10.50.1.1.

fs (Overload) is the sum of the stresses due to M℘ + Ms℘ + ⅝(M℄ + M(Imp)).

fs (Total) (Non-compact section) is the sum of the stresses due to 1.3[M℘ + Ms℘ + ⅝(M℄ + M(Imp))].

INTERIOR GIRDER REACTION TABLE		Abut.	Pier
R℘	(k)	93.8	247.4
R℄	(k)	48.8	90.7
Imp.	(k)	8.9	16.5
R (Total)	(k)	151.5	354.6

EXTERIOR GIRDER REACTION TABLE		Abut.	Pier
R℘	(k)	102.8	277.8
R℄	(k)	57.9	108.9
Imp.	(k)	10.6	19.8
R (Total)	(k)	171.3	406.5

EXTERIOR GIRDER MOMENT TABLE		0.4 Sp. 1 or 3	Pier 1 or 2	0.5 Sp. 2
Is	(in⁴)	90,086	111,511	49,076
Ic (n)	(in⁴)	171,047	–	109,413
Ic (3n)	(in⁴)	130,480	–	82,809
Ss	(in³)	2,630	3,209	1,476
Sc (n)	(in³)	3,154	–	1,920
Sc (3n)	(in³)	2,949	–	1,778
Z	(in³)	–	–	–
℘	(k/ft.)	1.34	1.69	1.27
M℘	('k)	2,303	3,799	605
s℘	(k/ft.)	0.38	–	0.38
Ms℘	('k)	687	–	262
M℄	('k)	1,538	1,423	1,180
M (Imp)	('k)	281	253	219
⅝[M℄+M(Imp)]	('k)	3,032	2,793	2,332
Ma	('k)	7,829	8,570	4,158
Mu	('k)	–	–	–
fs℘ non-comp	(k.s.i.)	10.5	14.2	4.9
fs℘ (comp)	(k.s.i.)	2.8	–	1.8
fs⅝(℄+Imp)	(k.s.i.)	11.5	10.4	14.6
fs (Overload)	(k.s.i.)	24.8	24.6	21.3
fs (Total)	(k.s.i.)	32.2	32.0	27.7
VR	(k)	64	–	67

INTERIOR GIRDER MOMENT TABLE		0.4 Sp. 1 or 3	Pier 1 or 2	0.5 Sp. 2
Is	(in⁴)	90,086	111,511	49,076
Ic (n)	(in⁴)	167,686	–	107,423
Ic (3n)	(in⁴)	128,005	–	80,978
Ss	(in³)	2,630	3,209	1,476
Sc (n)	(in³)	3,139	–	1,911
Sc (3n)	(in³)	2,934	–	1,766
Z	(in³)	–	–	–
℘	(k/ft.)	1.17	1.50	1.08
M℘	('k)	2,065	3,411	511
s℘	(k/ft.)	0.38	–	0.38
Ms℘	('k)	687	–	262
M℄	('k)	1,367	1,265	1,049
M (Imp)	('k)	249	230	191
⅝[M℄+M(Imp)]	('k)	2,693	2,492	2,067
Ma	('k)	7,079	7,674	3,692
Mu	('k)	–	–	–
fs℘ non-comp	(k.s.i.)	9.4	12.8	4.2
fs℘ (comp)	(k.s.i.)	2.8	–	1.8
fs⅝(℄+Imp)	(k.s.i.)	10.3	9.3	13.0
fs (Overload)	(k.s.i.)	22.5	22.1	19.0
fs (Total)	(k.s.i.)	29.3	28.7	24.7
VR	(k)	63	–	65

SECTION A-A

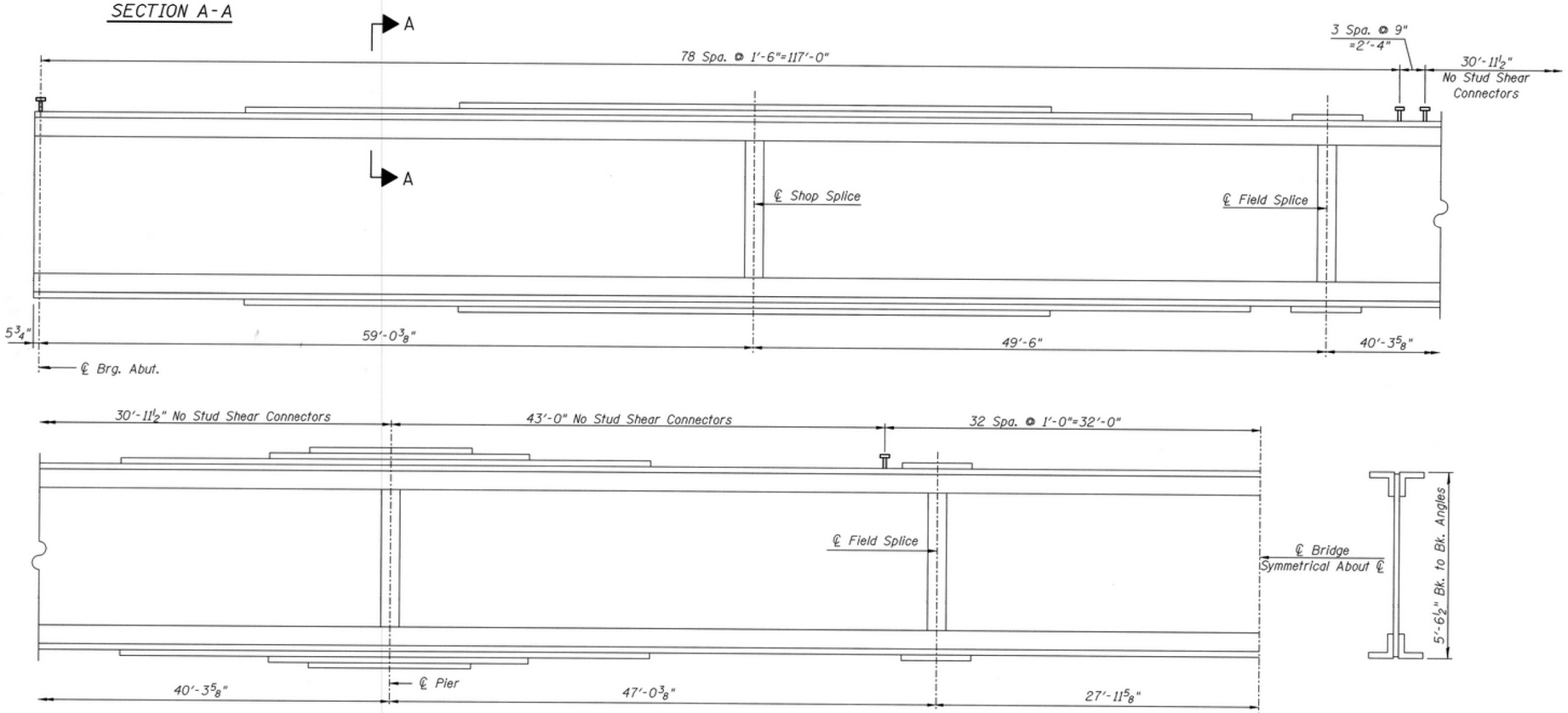

EXISTING GIRDER HALF ELEVATION

DESIGNED	BLU
CHECKED	SF
DRAWN	CED
CHECKED	LM

DATE: 12-31-99

FOR INFORMATION ONLY

GIRDER DETAILS
MILLINGTON BRIDGE OVER
FOX RIVER
SECTION 94-00036-00-BR
LASALLE-KENDALL COUNTIES
STATION 16+15.48
S.N. 047-3000

WILLETT HOFMANN & ASSOCIATES INC
ENGINEERING ARCHITECTURE LAND SURVEYING
809 EAST 2ND STREET, DIXON, IL 61021-0367
T: 815-284-3381 DESIGN FIRM: #184-000918

DESIGNED -	BKC	REVISED -	
CHECKED -	PLP	REVISED -	
DRAWN -	FDL	REVISED -	
CHECKED -	BKC	REVISED -	

LASALLE & KENDALL COUNTY
FAS 171(CH 3–MILLINGTON RD) OVER FOX RIVER
STATION 20+00

2000 EXISTING PLANS
STRUCTURE NO. 047-3000

STRUCTURAL SHEET NO. 54 OF 67 SHEETS

FAS RTE.	SECTION	COUNTY	TOTAL SHEETS	SHEET NO.
171	17-00802-00-BR	LASALLE	93	66
	17-00142-00-BR	KENDALL		

WHA# 1087J17 ILLINOIS FED. AID PROJECT WZPE(199) CONTRACT NO. 87683

FILE = S:\PROJECTS\2017\1087J17_KCH\DESIGN\CAD_SHEETS\1087J17_2000 Existing Plans.dgn

ROUTE NO.	SECTION	COUNTY	TOTAL SHEETS	SHEET NO.
C.H. F.A.S. 171	94-00036-00-BR	LASALLE & KENDALL	25	16
FED. ROAD DIST. NO. 7	ILLINOIS	FED. AID PROJECT-		

SHEET NO. S9 OF S18 SHEETS

KENDALL COUNTY
HIGHWAY DEPARTMENT

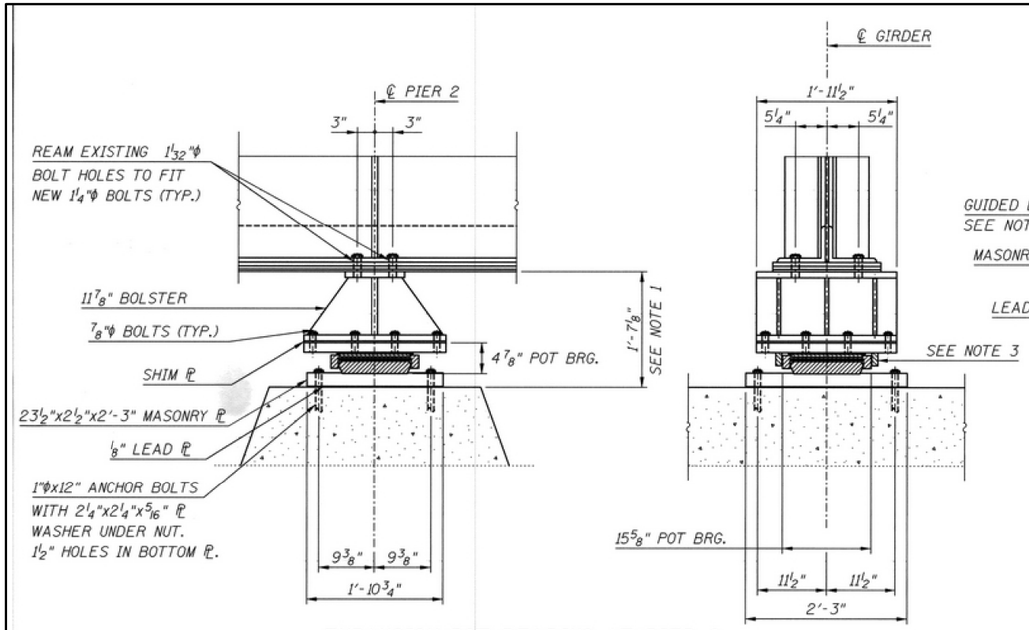

EXPANSION POT BEARING AT PIER 2

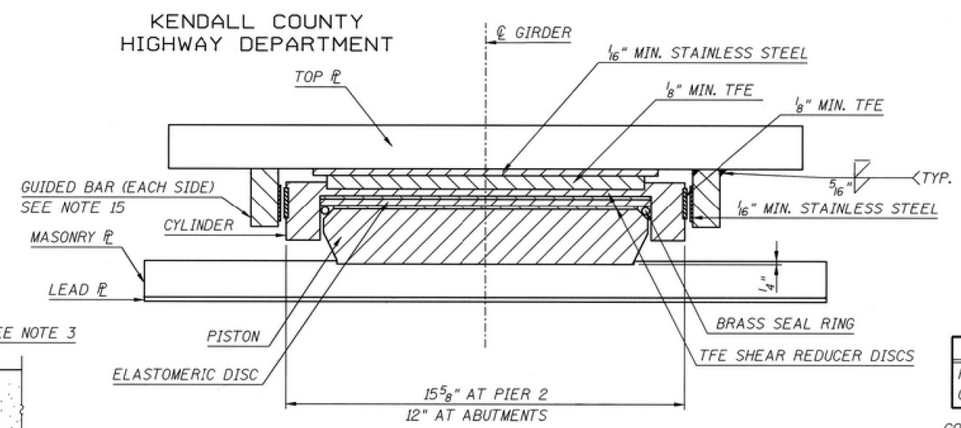

DETAIL OF EXPANSION BEARING ASSEMBLY

SEE NOTE 2

BILL OF MATERIAL

Item	Unit	Total
FLOATING BEARINGS, GUIDED EXPANSION	Each	12

COST OF MASONRY PLATE AND BOLSTER ARE INCLUDED WITH "FLOATING BEARINGS, GUIDED EXPANSION".
ESTIMATED WEIGHT OF MASONRY PLATE IS 291 LBS. (ABUTS.) AND 450 LBS. (PIER). ESTIMATED WEIGHT OF BOLSTER IS 259 LBS. (ABUTS.) AND 367 LBS. (PIER). CONTRACTOR SHALL PROVIDE 2-1/8" SHIM PLATES PER BEARING, COST INCLUDED WITH "FLOATING BEARINGS, GUIDED EXPANSION".

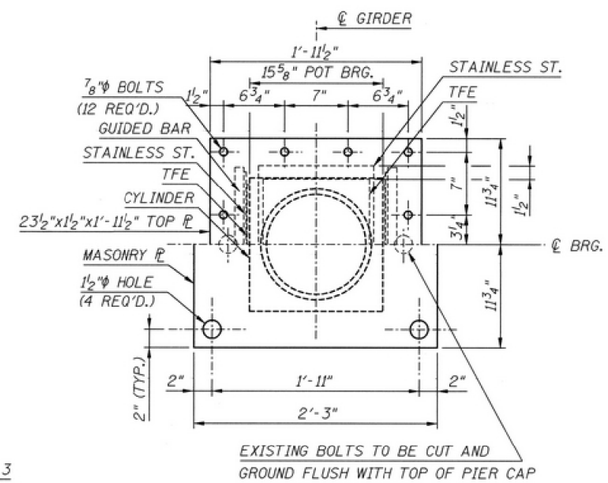

PLAN AT PIER 2

HALF OF TOP ℙ SHOWN

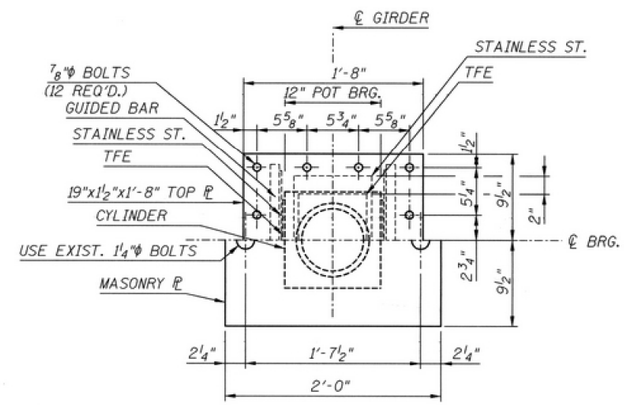

PLAN AT ABUTMENTS

HALF OF TOP ℙ SHOWN

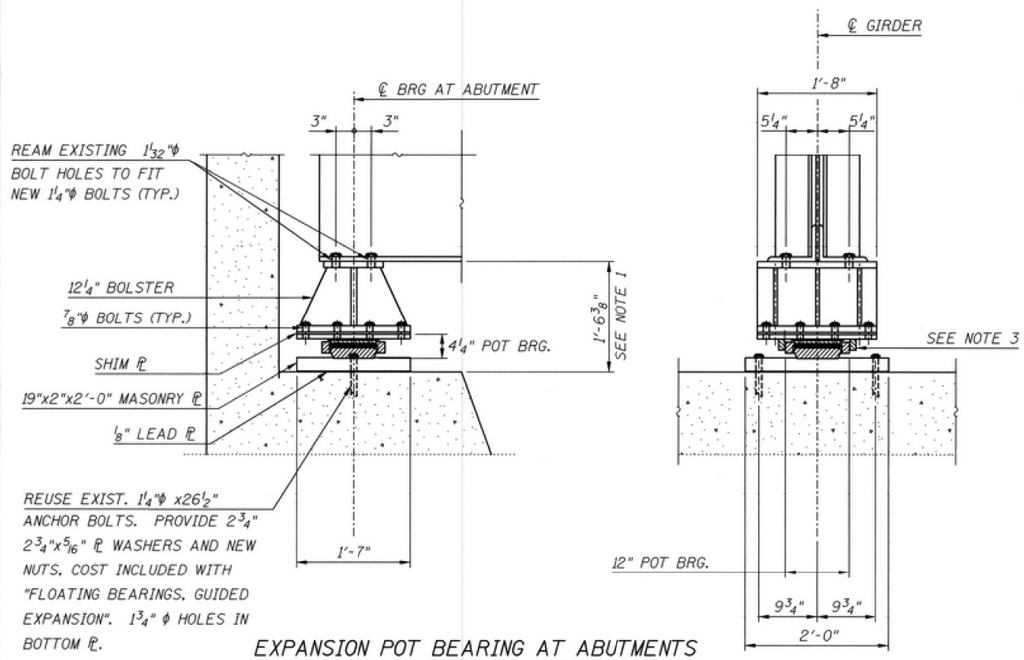

EXPANSION POT BEARING AT ABUTMENTS

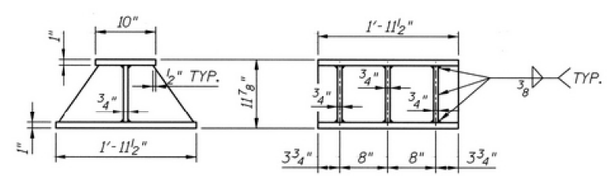

DETAIL OF BOLSTER AT PIER 2

(NO. REQ'D 4)

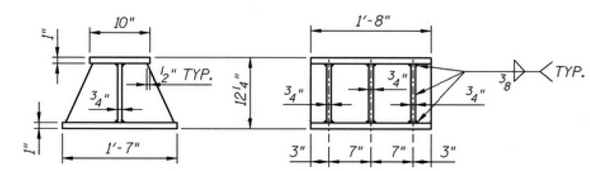

DETAIL OF BOLSTER AT ABUTMENTS

(NO. REQ'D 8)

FOR NOTES SEE SHEET S10.
SEE SHEET S16 FOR ANCHOR BOLT DETAILS

FOR INFORMATION ONLY

BEARING DETAILS
MILLINGTON BRIDGE OVER
FOX RIVER
SECTION 94-00036-00-BR
LASALLE-KENDALL COUNTIES
STATION 16+15.48
S.N. 047-3000

DESIGNED	JMC	
CHECKED	SF	
DRAWN	JMC	
CHECKED	BLU	

DATE: 12-31-99

FILE = S:\PROJECTS\2017\1087J17_KCH\DESIGN\CAD_SHEETS\1087J17_2000 Existing Plans.dgn

WILLETT HOFMANN & ASSOCIATES INC
ENGINEERING ARCHITECTURE LAND SURVEYING
809 EAST 2ND STREET, DIXON, IL 61021-0367
T: 815-284-3381 DESIGN FIRM: #184-000718

DESIGNED - BKC	REVISED -		
CHECKED - PLP	REVISED -		
DRAWN - FDL	REVISED -		
CHECKED - BKC	REVISED -		

LASALLE & KENDALL COUNTY
FAS 171(CH 3–MILLINGTON RD) OVER FOX RIVER
STATION 20+00

2000 EXISTING PLANS
STRUCTURE NO. 047-3000

STRUCTURAL SHEET NO. 55 OF 67 SHEETS

FAS RTE.	SECTION	COUNTY	TOTAL SHEETS	SHEET NO.
171	17-00802-00-BR	LASALLE	93	67
	17-00142-00-BR	KENDALL		

WHA* 1087J17 | ILLINOIS | FED. AID PROJECT WZPE(199) | CONTRACT NO. 87683

ROUTE NO.	SECTION	COUNTY	TOTAL SHEETS	SHEET NO.
C.H. F.A.S. 171	94-00036-00-BR	LASALLE & KENDALL	25	17
FED. ROAD DIST. NO. 7	ILLINOIS	FED. AID PROJECT-		

SHEET NO. S10 OF S18 SHEETS

KENDALL COUNTY
HIGHWAY DEPARTMENT

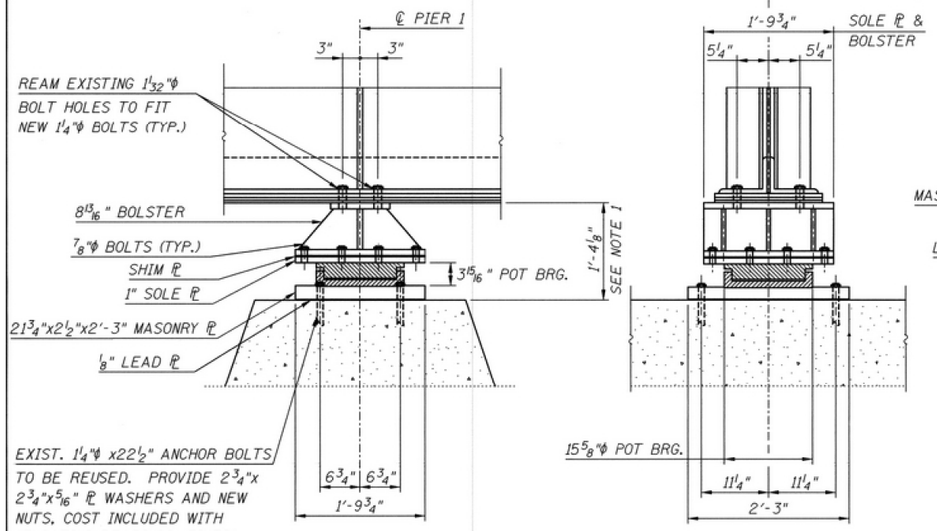

FIXED POT BEARING AT PIER 1

CONTRACTOR SHALL PROVIDE 2-1/8" SHIM ℙ'S PER BEARING. COST INCLUDED WITH "FLOATING BEARINGS, FIXED".

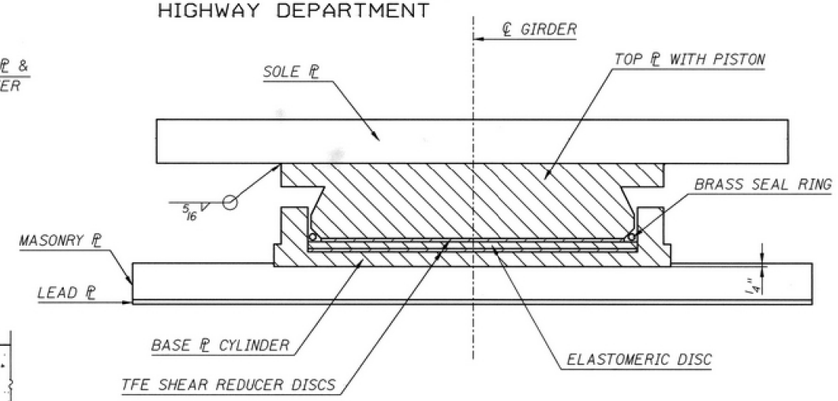

DETAIL OF BEARING ASSEMBLY

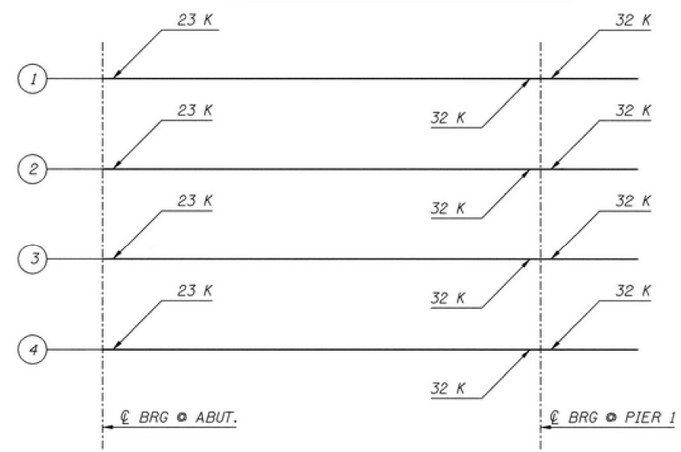

DEAD LOAD REACTIONS

INCLUDES WEIGHT OF STEEL ONLY

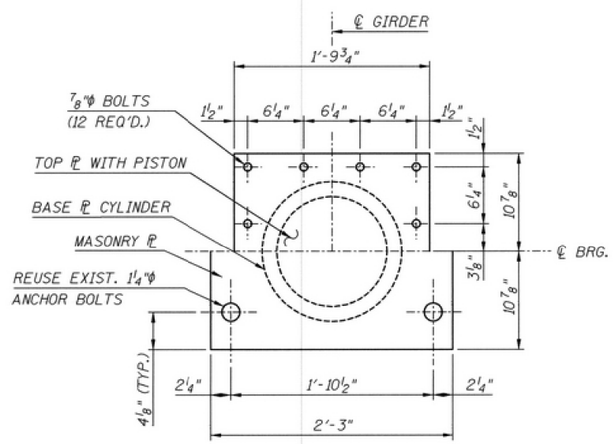

PLAN AT PIER 1

HALF OF TOP ℙ SHOWN

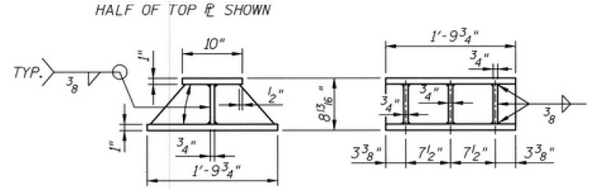

DETAIL OF BOLSTER AT PIER 1

(NO. REQ'D. 4)

NOTES

1. CONTRACTOR SHALL VERIFY VERTICAL CLEARANCES PRIOR TO FABRICATING BEARINGS.
2. THE BEARINGS SHOWN ARE FROM A SPECIFIC MAUNFACTURER. THE CONTRACTOR MAY FURNISH AN EQUIVALENT BEARING ASSEMBLY PROVIDED BY ANOTHER MANUFACTURER. SHOP DRAWINGS PREPARED FOR THE BEARINGS MUST BE SUBMITTED TO THE ENGINEER FOR APPROVAL.
3. GUIDE BARS AND CYLINDERS SHALL BE DESIGNED TO RESIST A MINIMUM OF 21K (ABUTMENTS), 56K (PIERS) HORIZONTAL SEISMIC FORCE.
4. ALL STEEL SHALL BE AASHTO M270 GRADE 50.
5. STAINLESS STEEL SHEET SHALL BE ASTM A240 TYPE 304 WITH MAX. SURFACE ROUGHNESS 20 RMS (MIRROR FINISH) CONTINUOUS WELD TO TOP ℙ GRIND WELD FLUSH WITH PLATE ALONG FRONT AND BACK EDGES.
6. POLYTETRAFLOUROETHYLENE (TFE) SHALL BE 100% VIRGIN (UNFILLED) POLYMER, ETCHED ON BINDING SIDE. TFE SHALL BE BONDED TO PISTON WITH AN APPROVED ADHESIVE (MAXIMUM COEFFICIENT OF FRICTION UNDER DEAD LOAD ONLY, 0.03). TFE SHALL BE 3/64" MIN. 3/32" MAX. THICKNESS.
7. POT DIAMETER SHALL BE 0.030±0.005 INCH GREATER THAN PISTON DIAMETER.
8. ELASTOMERIC DISK SHALL BE 55 DUROMETER HARDNESS.
9. FOR SEALING RING MATERIAL, SEE SPECIFICATIONS.
10. TFE DISK SHIMS (1/64" THICK) SHALL BE PROVIDED ABOVE AND BELOW THE ELASTOMERIC DISK.
11. ALL BOLTS SHALL BE ASTM A307 GALVANIZED UNLESS NOTED.
12. ALL ANCHOR BOLTS, NUTS, & WASHERS TO BE GALVANIZED.
13. BEARING DESIGN VERTICAL LOAD IS 387K (PIERS), 161K (ABUTS.).
14. THE EXPANSION LENGTHS USED FOR DESIGN OF THE BEARINGS ARE 148'-10" (S. ABUT.), 150'-0" (PIER 2) AND 298'-10" (N. ABUT.).
15. AS ALTERNATES TO THE WELDED CONNECTION SHOWN, THE GUIDE BARS MAY BE CONNECTED TO THE TOP BEARING PLATE BY BOLTS OR THE GUIDE BARS AND THE TOP BEARING PLATE MAY BE FABRICATED AS A SINGLE PIECE.

BILL OF MATERIAL

Item	Unit	Total
JACK AND REMOVE EXISTING BEARINGS	EACH	16
FLOATING BEARINGS, FIXED	EACH	4

COST OF MASONRY PLATE AND BOLSTER ARE INCIDENTAL TO THE FLOATING BEARING-FIXED.
ESTIMATED WEIGHT OF MASONRY PLATE IS 416 LBS.
ESTIMATED WEIGHT OF BOLSTER IS 290 LBS.

PROCEDURE TO JACK AND REMOVE EXISTING BEARINGS

1. THE CONTRACTOR SHALL SUBMIT FOR APPROVAL TO THE ENGINEER PLANS FOR JACKING PRIOR TO COMMENCING ANY WORK AT THE BEARINGS. DEAD LOAD = 23.0K AT EACH BEAM AT ABUTMENTS AND 64.0K (32.0K AT JACKING) AT EACH BEAM AT EACH PIER WITHOUT CONCRETE. MIN. JACK CAPACITY AT EACH BEAM SHALL BE 13 TONS AT ABUTMENTS AND 17 TONS AT PIERS.
2. JACKING AND REMOVING EXISTING BEARINGS SHALL BE DONE AFTER DECK REMOVAL IS COMPLETED AND BEFORE NEW DECK IS POURED.
3. ALL BEAMS AT ONE ABUTMENT OR AT ONE PIER SHALL BE LIFTED SIMULTANEOUSLY.
4. JACKING SHALL BE LIMITED TO A MAXIMUM OF 1/4"
5. REMOVE EXISTING BEARING AND BOTTOM PLATES. AT PIER 1 AND ABUTMENTS LEAVE EXISTING ANCHOR BOLTS INTACT.
6. CLEAN AND REUSE EXISTING ANCHOR BOLTS (AT ABUTMENTS AND PIER 1).
7. INSTALL NEW BEARINGS AND LOWER JACKS BEFORE POURING NEW DECK.

FOR INFORMATION ONLY

BEARING DETAILS 2
MILLINGTON BRIDGE OVER
FOX RIVER
SECTION 94-00036-00-BR
LASALLE-KENDALL COUNTIES
STATION 16+15.48
S.N. 047-3000

DESIGNED	JMC	
CHECKED	SF	
DRAWN	JMC	
CHECKED	BLU	

DATE: 12-31-99

WILLETT HOFMANN & ASSOCIATES INC
ENGINEERING ARCHITECTURE LAND SURVEYING
809 EAST 2ND STREET, DIXON, IL 61021-0367
T: 815-284-3381 DESIGN FIRM: #184-000918

DESIGNED - BKC	REVISED -	LASALLE & KENDALL COUNTY	2000 EXISTING PLANS
CHECKED - PLP	REVISED -	FAS 171(CH 3–MILLINGTON RD) OVER FOX RIVER	STRUCTURE NO. 047-3000
DRAWN - FDL	REVISED -	STATION 20+00	STRUCTURAL SHEET NO. 56 OF 67 SHEETS
CHECKED - BKC	REVISED -		

FAS RTE.	SECTION	COUNTY	TOTAL SHEETS	SHEET NO.
171	17-00802-00-BR	LASALLE	93	68
	17-00142-00-BR	KENDALL		

WHA= 1087J17 ILLINOIS FED. AID PROJECT WZPE(199) CONTRACT NO. 87683

FILE = S:\PROJECTS\2017\1087J17_KCH\DESIGN\CAD_SHEETS\1087J17_2000 Existing Plans.dgn

ROUTE NO.	SECTION	COUNTY	TOTAL SHEETS	SHEET NO.
C.H. 3 F.A.S. 171	94-00036-00-BR	LASALLE & KENDALL	25	18
FED. ROAD DIST. NO. 7	ILLINOIS	FED. AID PROJECT-		

SHEET NO. S11 OF S18 SHEETS

KENDALL COUNTY
HIGHWAY DEPARTMENT

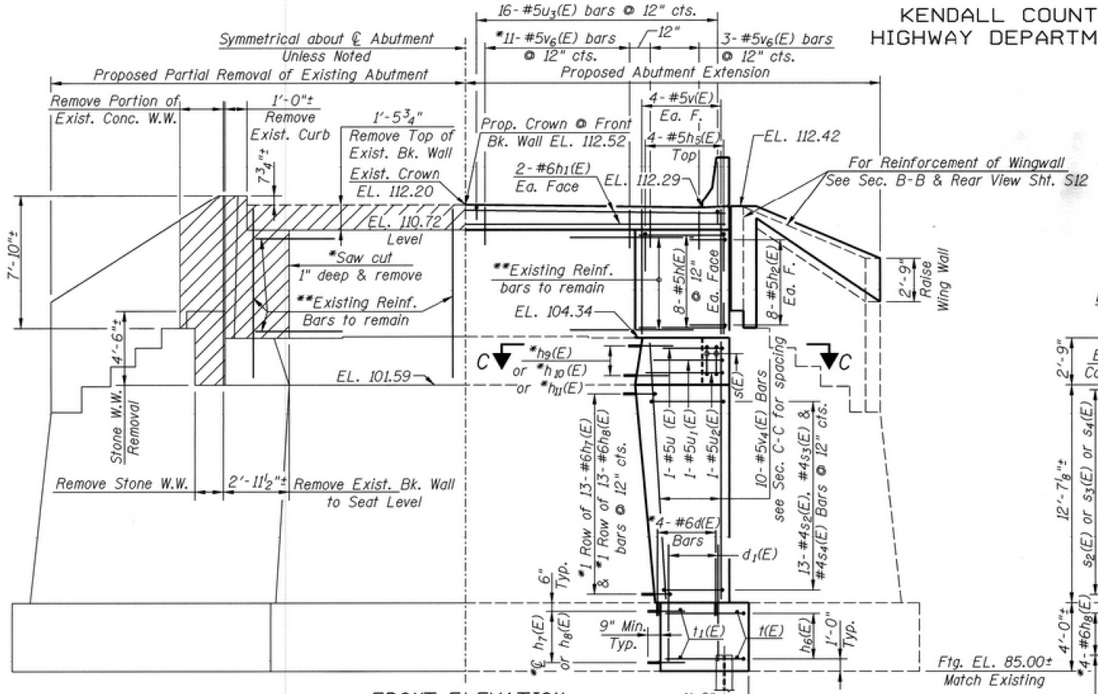

FRONT ELEVATION

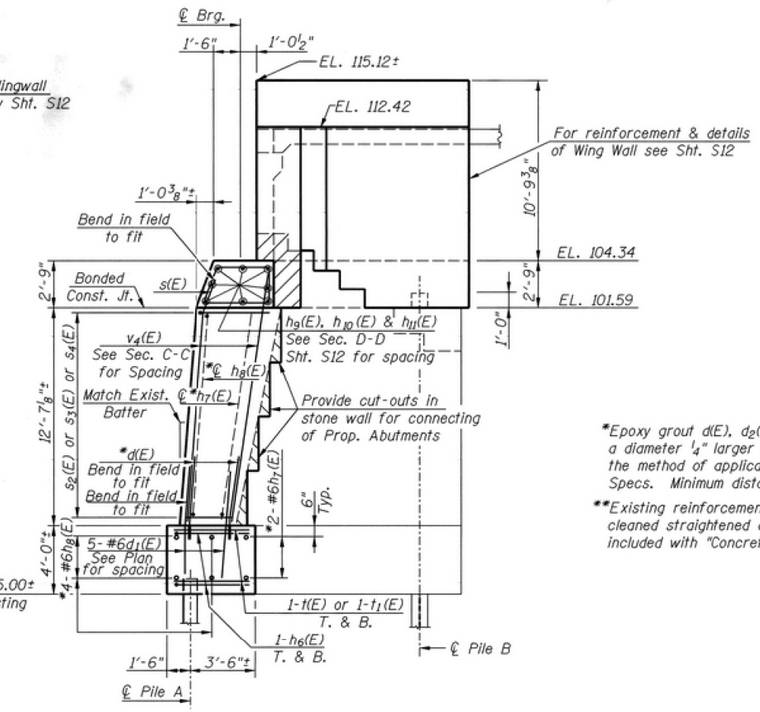

TYPICAL SIDE ELEVATION F-F

PILE DATA

Type: Steel HP10x42
Capacity: Driven to Refusal
Est'd. Length:
Pile A = 20'
Pile B = 37'
No. Req'd:
Pile A = 4
Pile B = 4

*Epoxy grout d(E), d_2(E), h_7(E) through h_{11} (E) & v_6(E) bars in holes having a diameter ¼" larger than the bar and a depth of 9". The grout and the method of application shall be according to Sec. 584 of Standard Specs. Minimum distance to edge of existing concrete shall be 3".

**Existing reinforcement bars extending into removed areas shall be cleaned straightened and incorporated into new construction. Cost included with "Concrete Removal".

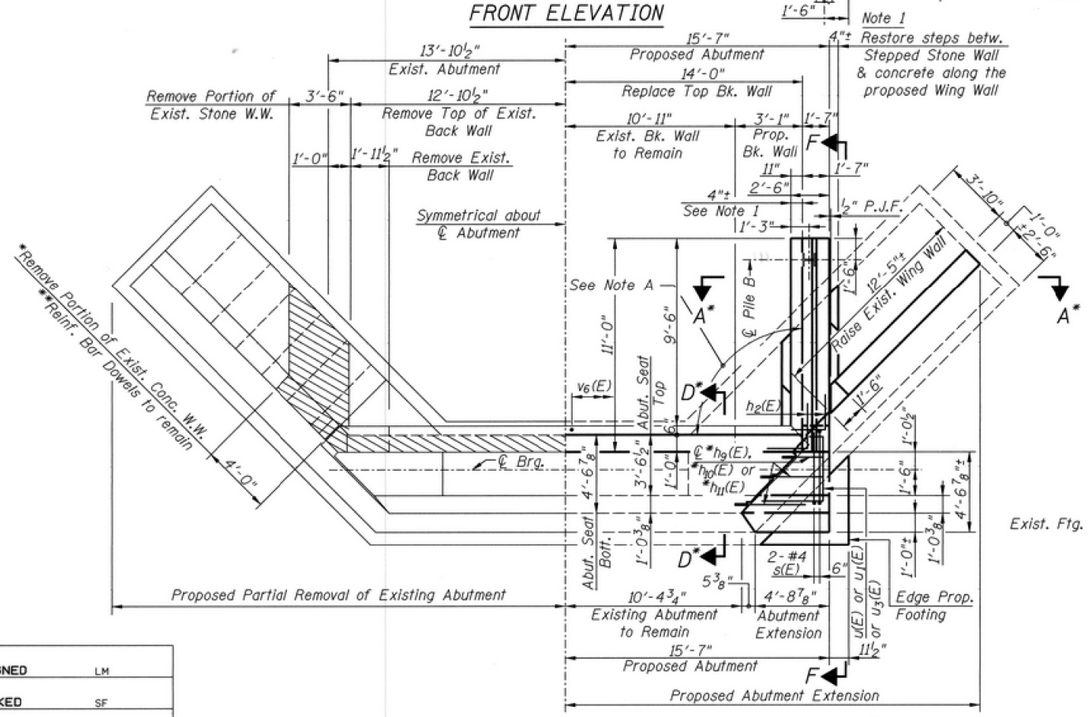

PLAN

Note A:
Wing Walls and Retaining Walls shall be constructed parallel to the ℄ C.H. 3. The angle indicated between the Bk. of Abut. and face of barrier is 90° at the North Abutment and 92°00'06" (or 87°59'54" depending on the offset) at the South Abutment. See the Plan and Profile sheet.

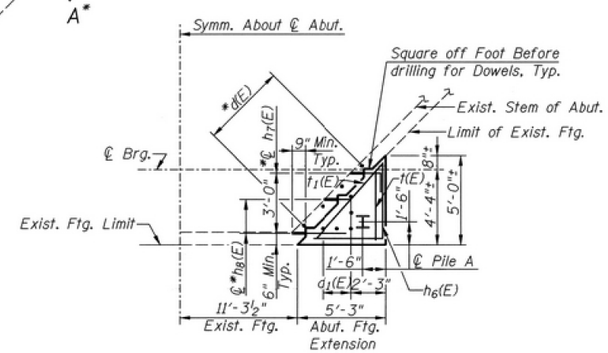

FOOTING PLAN

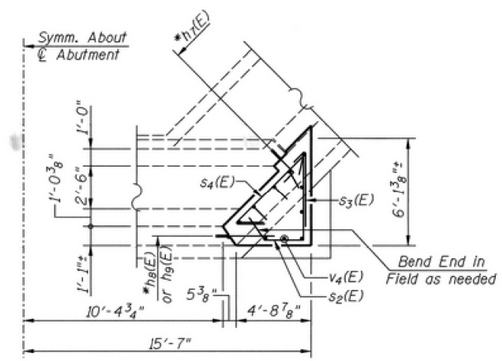

SECTION C-C

*See Sheet S12 of S18

DESIGNED	LM
CHECKED	SF
DRAWN	CED
CHECKED	LM

DATE: 12-31-99

REMOVAL

CONSTRUCTION

FOR INFORMATION ONLY

SOUTH & NORTH ABUTMENT
MILLINGTON BRIDGE OVER
FOX RIVER
SECTION 94-00036-00-BR
LASALLE-KENDALL COUNTIES
STATION 16+15.48
S.N. 047-3000

WILLETT HOFMANN & ASSOCIATES INC
ENGINEERING ARCHITECTURE LAND SURVEYING
809 EAST 2ND STREET, DIXON, IL 61021-0367
T: 815-284-3381 DESIGN FIRM: #184-000918

DESIGNED - BKC	REVISED -	LASALLE & KENDALL COUNTY FAS 171(CH 3–MILLINGTON RD) OVER FOX RIVER STATION 20+00	2000 EXISTING PLANS STRUCTURE NO. 047-3000
CHECKED - PLP	REVISED -		
DRAWN - FDL	REVISED -		
CHECKED - BKC	REVISED -		STRUCTURAL SHEET NO. 57 OF 67 SHEETS

FAS RTE.	SECTION	COUNTY	TOTAL SHEETS	SHEET NO.
171	17-00802-00-BR	LASALLE	93	69
	17-00142-00-BR	KENDALL		

WHA* 1087J17 ILLINOIS FED. AID PROJECT WZPE(199) CONTRACT NO. 87683

FILE = S:\PROJECTS\2017\1087J17_KCH\DESIGN\CAD_SHEETS\1087J17_2000 Existing Plans.dgn

ROUTE NO.	SECTION	COUNTY	TOTAL SHEETS	SHEET NO.
C.H. F.A.S. 171	94-00036-00-BR	LASALLE & KENDALL	25	19
FED. ROAD DIST. NO. 7	ILLINOIS	FED. AID PROJECT-		

SHEET NO. S12 OF S18 SHEETS

KENDALL COUNTY
HIGHWAY DEPARTMENT

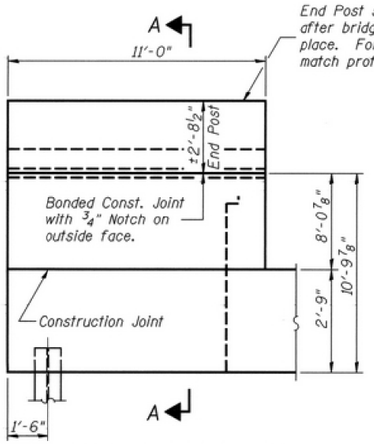

WING WALL ELEVATION

Notes: Reinforcement bars designated (E) shall be epoxy coated.

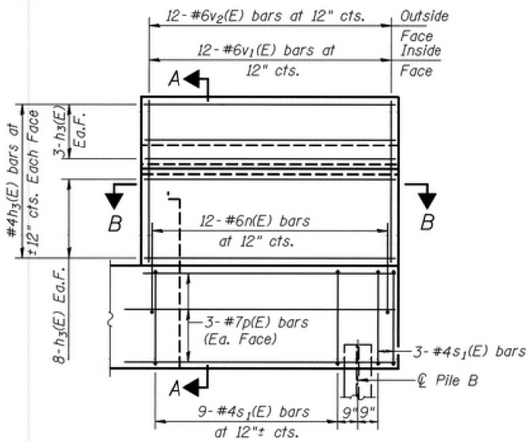

WING WALL ELEVATION

Reinforcement

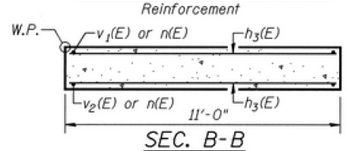

SEC. B-B

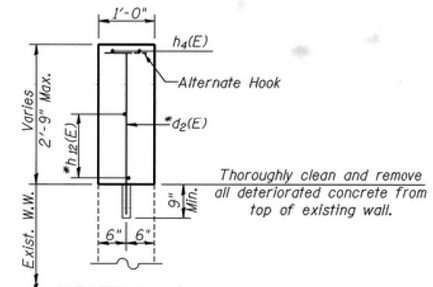

SECTION E-E

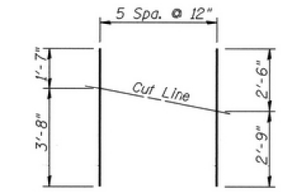

***CUTTING DIAGRAM BAR d_2(E)

Order bar d_2(E) full length. Use remainder as shown. See Bar d_2(E) Bending Diagram

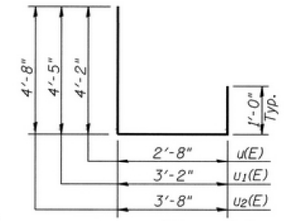

BAR u(E), u_1(E) & u_2(E)

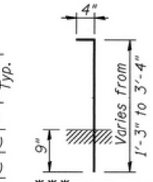

***BAR d_2(E)

See Cutting Diagram

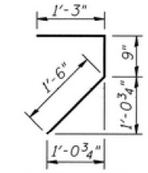

BAR h_5(E)

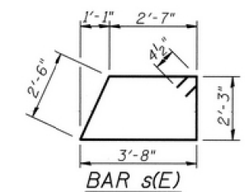

BAR s(E)

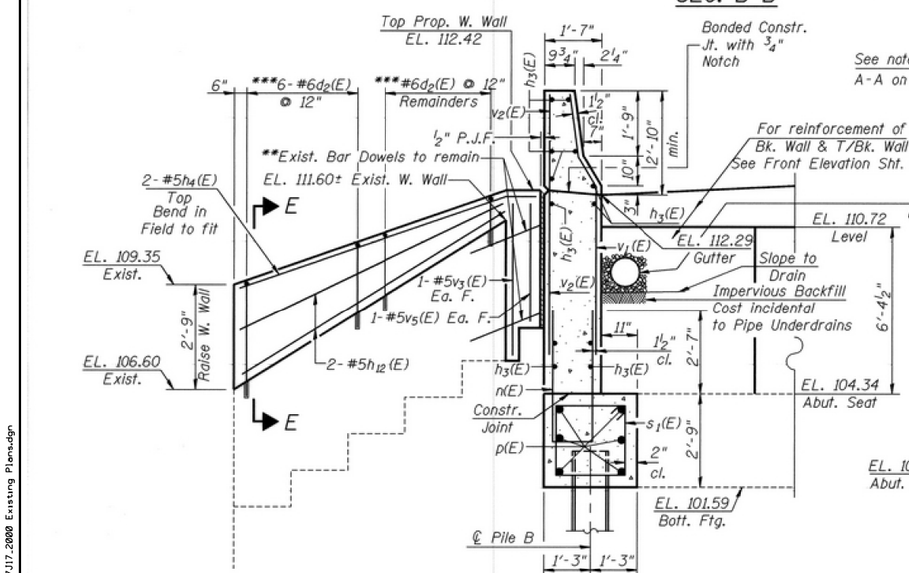

SEC. A-A & REAR VIEW

Scale: ⅜"=1'-0"

*Epoxy grout d(E), d_2(E), h_7(E) through h_{11}(E) & v_6(E) bars in holes having a diameter ¼" larger than the bar and a depth of 9". The grout and the method of application shall be according to Sec. 584 of the Standard Specs. Minimum edge distance to existing concrete shall be 3".

**Existing reinforcement bar dowels to be thoroughly cleaned and incorporated into new concrete.

See Sheet S11 for pile data.

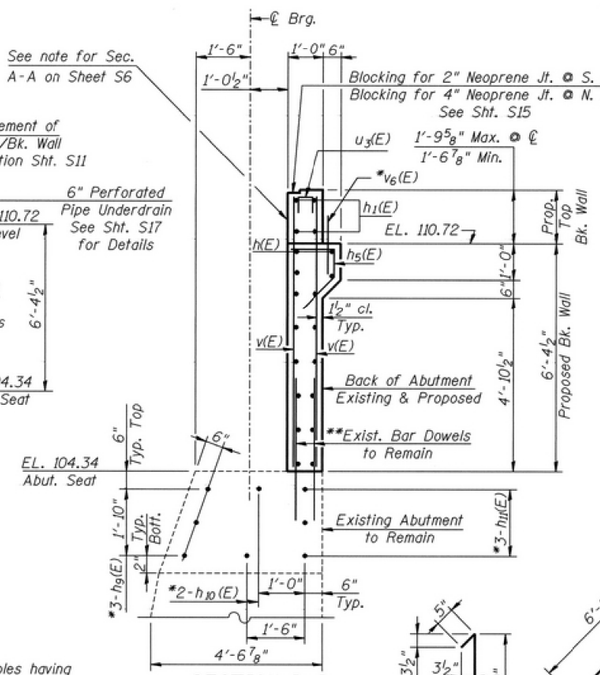

SECTION D-D

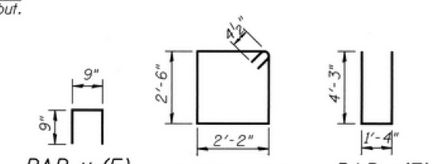

BAR u_3(E) BARS s_1(E) BAR n(E)

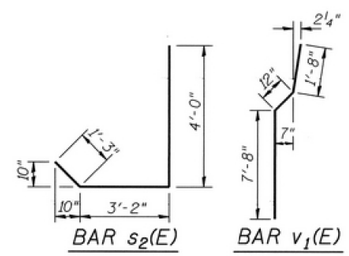

BAR s_2(E) BAR v_1(E)

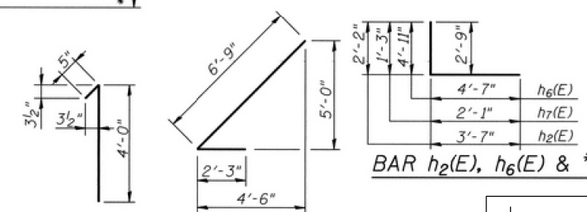

BAR s_3(E) BAR s_4(E) BAR h_2(E), h_6(E) & *h_7(E)

BILL OF MATERIAL

	Bar	Size	No. S. Abut.	No. N. Abut.	No. Total	Length	Shape
*	d(E)	#6	8	8	16	3'-9"	
	d_1(E)	#6	10	10	20	5'-6"	
(***) *	d_2(E)	#6	12	12	24	5'-3"	
	h(E)	#5	32	32	64	2'-9"	
	h_1(E)	#6	4	4	8	27'-8"	
	h_2(E)	#5	32	32	64	5'-9"	
	h_3(E)	#4	44	44	88	10'-8"	
	h_4(E)	#5	4	4	8	11'-0"	
	h_5(E)	#5	8	8	16	3'-6"	
	h_6(E)	#6	4	4	8	9'-0"	
*	h_7(E)	#6	30	30	60	3'-4"	
*	h_8(E)	#6	34	34	68	3'-4"	
*	h_9(E)	#6	6	6	12	4'-9"	
*	h_{10}(E)	#6	4	4	8	4'-3"	
*	h_{11}(E)	#6	6	6	12	2'-0"	
	h_{12}(E)	#5	4	4	8	12'-0"	
	n(E)	#6	24	24	48	9'-10"	
	p(E)	#7	12	12	24	14'-0"	
	s(E)	#4	4	4	8	11'-9"	
	s_1(E)	#4	24	24	48	10'-1"	
	s_2(E)	#4	26	26	52	8'-5"	
	s_3(E)	#4	26	26	52	4'-5"	
	s_4(E)	#4	26	26	52	9'-0"	
	t(E)	#6	4	4	8	4'-3"	
	t_1(E)	#6	4	4	8	6'-10"	
	v(E)	#5	16	16	32	7'-4"	
	v_1(E)	#6	24	24	48	10'-4"	
	v_2(E)	#6	24	24	48	10'-2"	
	v_3(E)	#5	4	4	8	8'-6"	
	v_4(E)	#5	20	20	40	14'-6"	
	v_5(E)	#5	4	4	8	7'-6"	
*	v_6(E)	#5	14	14	28	1'-9"	
	u(E)	#5	2	2	4	7'-10"	
	u_1(E)	#5	2	2	4	8'-7"	
	u_2(E)	#5	2	2	4	9'-4"	
	u_3(E)	#5	32	32	64	2'-3"	

	Measure	S. Abut.	N. Abut.	Total
Structure Excavation	Cu. Yd.	68.2	68.2	136.4
Concrete Structures	Cu. Yd.	46.6	46.6	93.2
Reinforcement Bars, Epoxy Coated	Pound	4,300	4,300	8,600
Furnishing Steel Piles HP10x42	Foot	114	114	228
Driving Steel Piles	Foot	114	114	228
Concrete Removal	Cu. Yd.	11.6	11.6	23.2

ABUTMENT DETAILS
MILLINGTON BRIDGE OVER
FOX RIVER
SECTION 94-00036-00-BR
LASALLE-KENDALL COUNTIES
STATION 16+15.48
S.N. 047-3000

FOR INFORMATION ONLY

DESIGNED	LM
CHECKED	SF
DRAWN	CED
CHECKED	SF

DATE: 12-31-99

WILLETT HOFMANN & ASSOCIATES INC
ENGINEERING ARCHITECTURE LAND SURVEYING
809 EAST 2ND STREET, DIXON, IL 61021-0367
T: 815-284-3381 DESIGN FIRM: #184-000918

DESIGNED - BKC	REVISED -		
CHECKED - PLP	REVISED -		
DRAWN - FDL	REVISED -		
CHECKED - BKC	REVISED -		

LASALLE & KENDALL COUNTY
FAS 171(CH 3–MILLINGTON RD) OVER FOX RIVER
STATION 20+00

2000 EXISTING PLANS
STRUCTURE NO. 047-3000
STRUCTURAL SHEET NO. 58 OF 67 SHEETS

FAS RTE.	SECTION	COUNTY	TOTAL SHEETS	SHEET NO.
171	17-00802-00-BR	LASALLE	93	70
	17-00142-00-BR	KENDALL		

WHA* 1087J17 | ILLINOIS | FED. AID PROJECT WZPE(199) | CONTRACT NO. 87683

FILE = S:\PROJECTS\2087\1087J17.KCH\DESIGN\CAD.SHEETS\1087J17.2000 Existing Plans.dgn

KENDALL COUNTY
HIGHWAY DEPARTMENT

ROUTE NO.	SECTION	COUNTY	TOTAL SHEETS	SHEET NO.
C.H. F.A.S. 171	94-00036-00-BR	LASALLE & KENDALL	25	20
FED. ROAD DIST. NO. 7		ILLINOIS	FED. AID PROJECT-	

SHEET NO. S13 OF S18 SHEETS

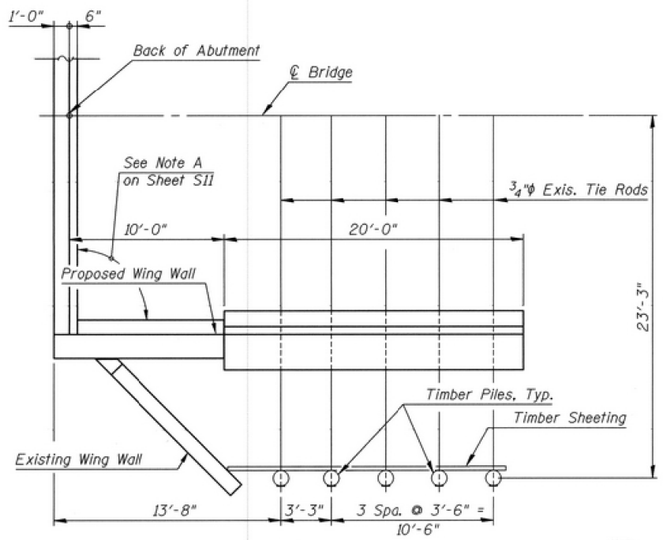

PLAN

Note:
Care shall be taken by the Contractor not to disturb the timber sheeting or piling or sever any tie rods during excavation.

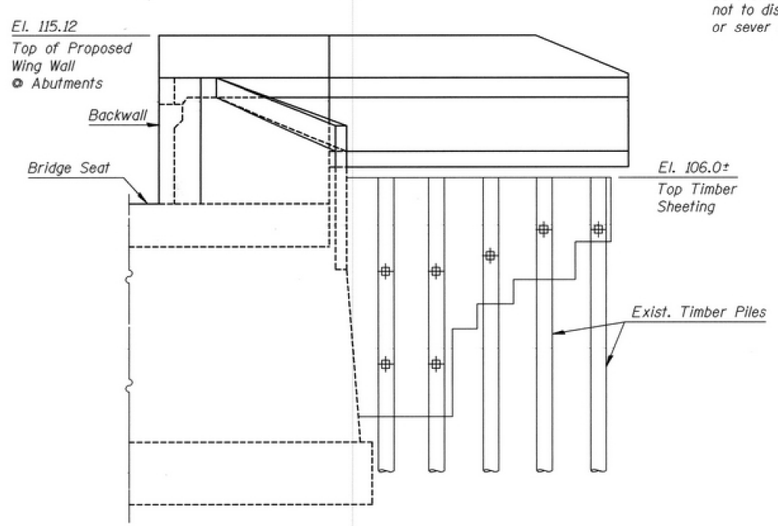

ELEVATION

EXIST. TIMBER PILE LAYOUT

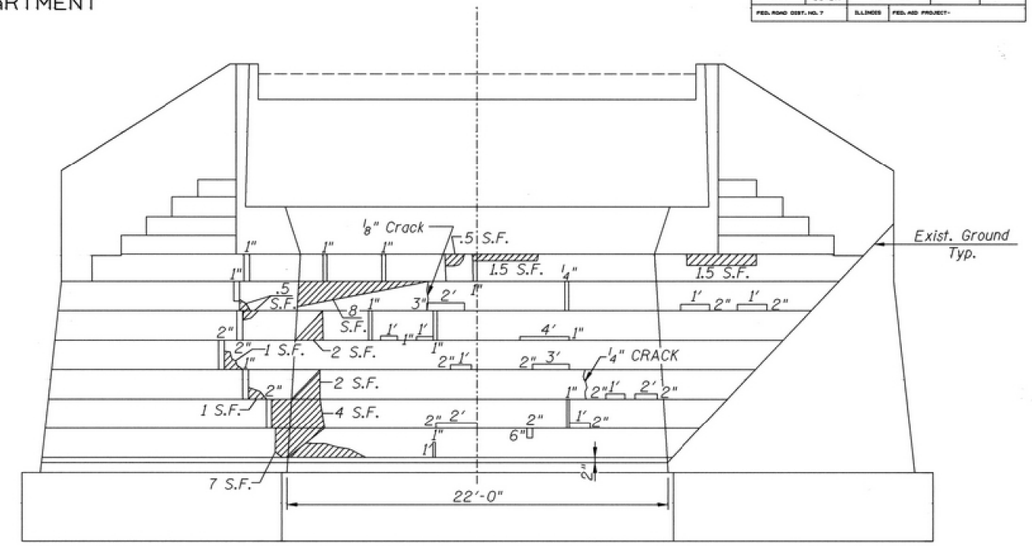

N.W. WING WALL — FRONT ELEVATION NORTH ABUTMENT — N.E. WING WALL

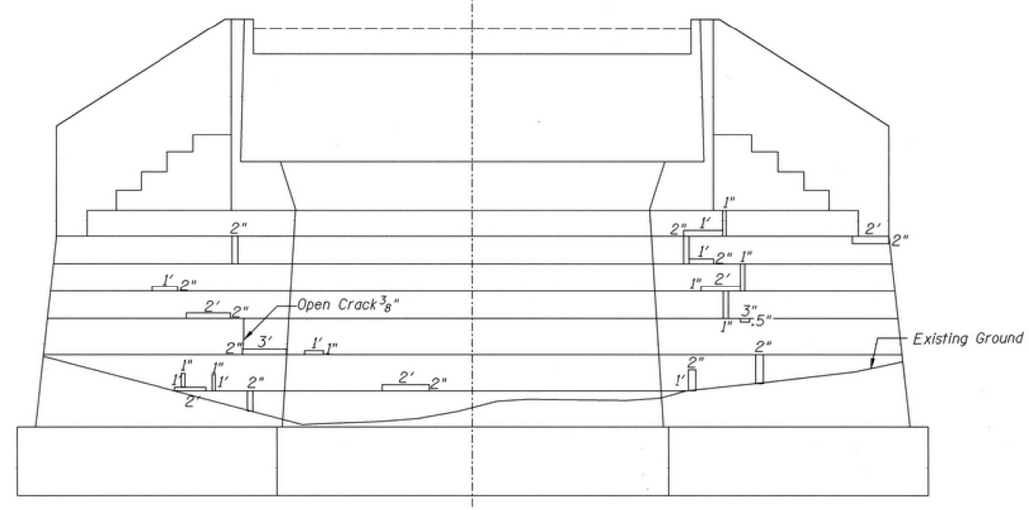

S.E. WING WALL — FRONT ELEVATION SOUTH ABUTMENT — S.W. WING WALL

BILL OF MATERIAL

	Measure	S. Abut.	N. Abut.	Total
Formed Concrete Repair Depth > 5 in.	Sq. Ft.	-	29	29
Epoxy Crack Sealing	Foot	2	4	6
Stone Masonry Tuck Pointing	Foot	31	76	107

Legend:
- Spall on Stone Masonry or Concrete Footing = Formed Concrete Repair
- Cracks in Stone Masonry or Concrete Footing to be Epoxy Sealed.
- Open Joints to be tuck pointed

ABUTMENT REPAIRS & EXIST. TIMBER PILE DETAILS
MILLINGTON BRIDGE OVER FOX RIVER
SECTION 94-00036-00-BR
LASALLE-KENDALL COUNTIES
STATION 16+15.48
S.N. 047-3000

DESIGNED	LM
CHECKED	ELD
DRAWN	CED
CHECKED	ELD

DATE: 12-31-99

FOR INFORMATION ONLY

WILLETT HOFMANN & ASSOCIATES INC
ENGINEERING ARCHITECTURE LAND SURVEYING
809 EAST 2ND STREET, DIXON, IL 61021-0367
T: 815-284-3381 DESIGN FIRM: #184-000918

DESIGNED - BKC	REVISED -		
CHECKED - PLP	REVISED -		
DRAWN - FDL	REVISED -		
CHECKED - BKC	REVISED -		

LASALLE & KENDALL COUNTY
FAS 171(CH 3–MILLINGTON RD) OVER FOX RIVER
STATION 20+00

2000 EXISTING PLANS
STRUCTURE NO. 047-3000
STRUCTURAL SHEET NO. 59 OF 67 SHEETS

FAS RTE.	SECTION	COUNTY	TOTAL SHEETS	SHEET NO.
171	17-00802-00-BR	LASALLE	93	71
	17-00142-00-BR	KENDALL		

WHA# 1087J17 ILLINOIS FED. AID PROJECT WZPE(199) CONTRACT NO. 87683

FILE = S:\PROJECTS\2017\1087J17_KCH\DESIGN\CAD_SHEETS\1087J17_2000 Existing Plans.dgn

ROUTE NO.	SECTION	COUNTY	TOTAL SHEETS	SHEET NO.
C.H. F.A.S. 171	94-00036-00-BR	LASALLE & KENDALL	25	21
FED. ROAD DIST. NO. 7	ILLINOIS	FED. AID PROJECT-		

SHEET NO. S14 OF S18 SHEETS

KENDALL COUNTY
HIGHWAY DEPARTMENT

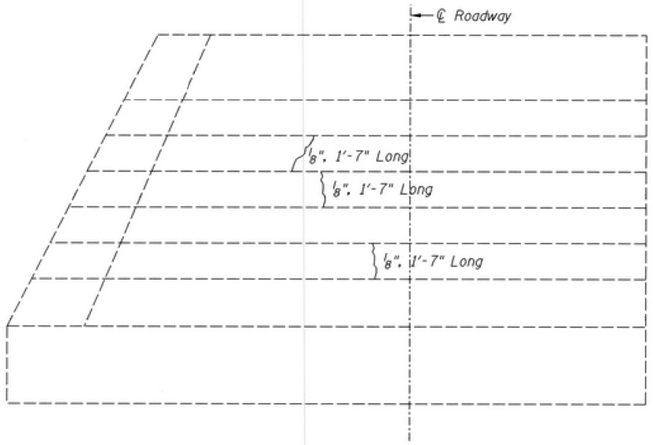

PIER 1 REPAIRS-LOOKING SOUTH

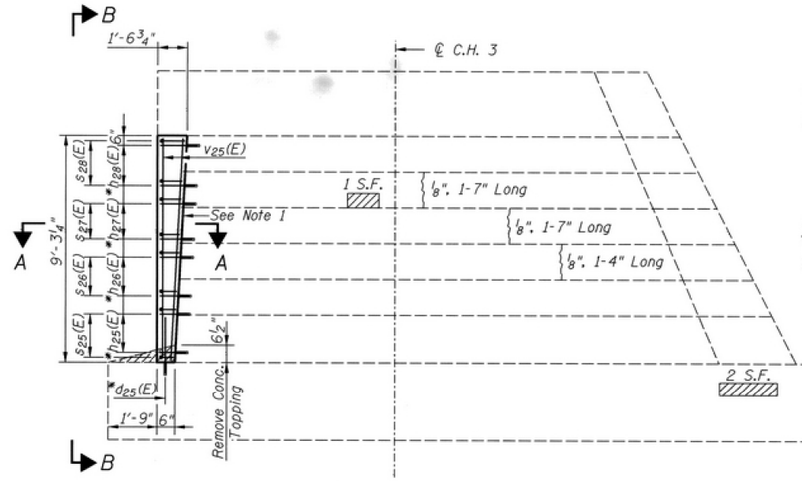

PIER 1 EXTENSION & REPAIRS-LOOKING NORTH

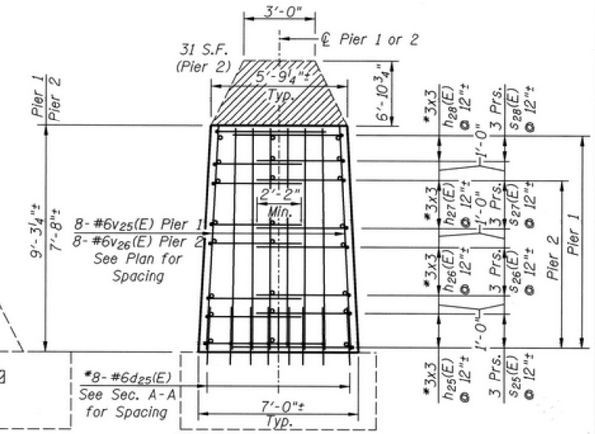

END ELEVATION B-B

Reinforcement Bars designated (E) shall be Epoxy Coated

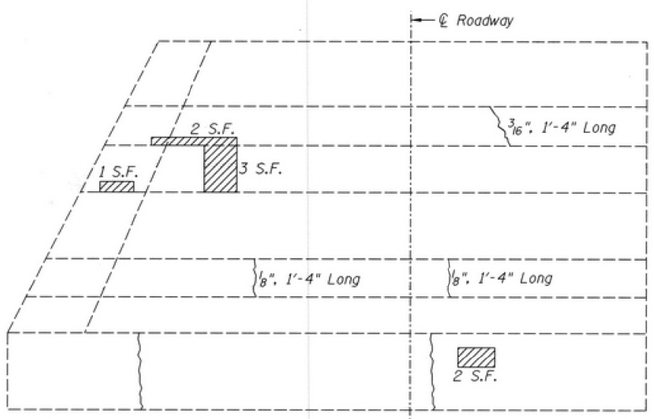

PIER 2 REPAIRS-LOOKING SOUTH

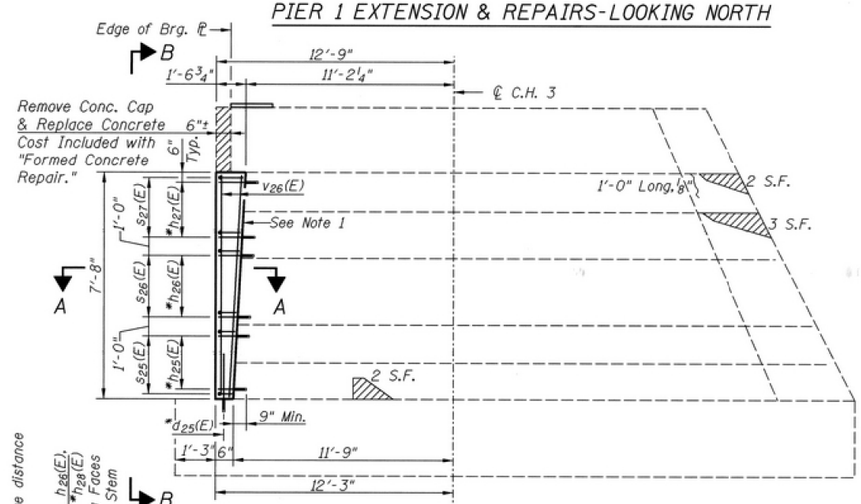

PIER 2 EXTENSION & REPAIRS-LOOKING NORTH

BILL OF MATERIAL

Bar	Size	No. Pier 1	No. Pier 2	No. Total	Length	Shape
$h_{25}(E)$	#6	9	9	18	1'-0"	
$h_{26}(E)$	#6	9	9	18	1'-3"	
$h_{27}(E)$	#6	9	9	18	1'-6"	
$h_{28}(E)$	#6	9	-	9	1'-9"	
$d_{25}(E)$	#6	8	8	16	3'-3"	
$s_{25}(E)$	#4	6	6	12	4'-9"	
$s_{26}(E)$	#4	6	6	12	5'-0"	
$s_{27}(E)$	#4	6	6	12	5'-3"	
$s_{28}(E)$	#4	6	-	6	5'-6"	
$v_{25}(E)$	#6	8	-	8	8'-10"	
$v_{26}(E)$	#6	-	8	8	7'-3"	

Item	Measure	Pier 1	Pier 2	Total
Concrete Structures	Cu. Yd.	2.1	1.8	3.9
Reinforcement Bars, Epoxy Coated	Lbs.	310	240	550
Formed Concrete Repair Depth > 5"	Sq. Ft.	16	53	69
Epoxy Crack Sealing	Foot	10	13	23

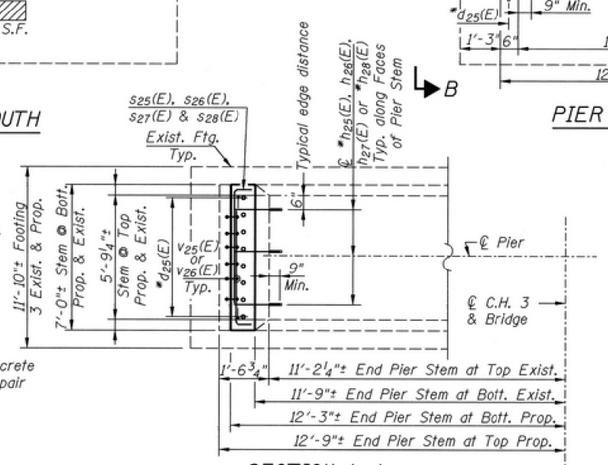

SECTION A-A

*Epoxy grout $d_{25}(E)$ & $h_{25}(E)$ through $h_{28}(E)$ bars in holes having a diameter 1/4" larger than the bar and a depth of 9". The grout and the method of application shall be according to Art. 584 of the Std. Specs. Minimum distance to edge of existing concrete shall be 3".

Note 1: Remove all loose parts of stone wall & thoroughly clean before placing of concrete

Legend: Spall on Stone Masonry or Concrete Footing = Formed Concrete Repair

Cracks in Stone Masonry or Concrete Footing to be Epoxy Sealed.

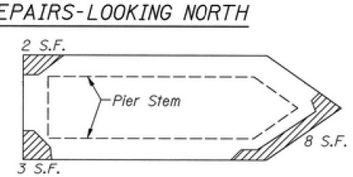

PIER 1 FOOTING REPAIRS - PLAN

PIER 2 FOOTING REPAIRS - PLAN

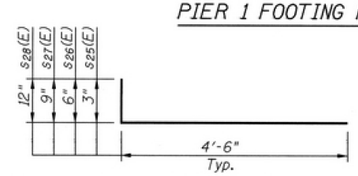

BARS $s_{25}(E)$, $s_{26}(E)$, $s_{27}(E)$ & $s_{28}(E)$

PIER 1 & 2 EXTENSION & REPAIRS
MILLINGTON BRIDGE OVER
FOX RIVER
SECTION 94-00036-00-BR
LASALLE-KENDALL COUNTIES
STATION 16+15.48
S.N. 047-3000

FOR INFORMATION ONLY

DESIGNED	LM
CHECKED	SF
DRAWN	CED
CHECKED	LM

DATE: 12-31-99

FILE = S:\PROJECTS\2017\1087J17.KCH\DESIGN\CAD.SHEETS\1087J17.2000 Existing Plans.dgn

WILLETT HOFMANN & ASSOCIATES INC
ENGINEERING ARCHITECTURE LAND SURVEYING
809 EAST 2ND STREET, DIXON, IL 61021-0367
T: 815-284-3381 DESIGN FIRM: #184-000918

DESIGNED - BKC	REVISED -	LASALLE & KENDALL COUNTY	2000 EXISTING PLANS
CHECKED - PLP	REVISED -	FAS 171(CH 3–MILLINGTON RD) OVER FOX RIVER	STRUCTURE NO. 047-3000
DRAWN - FDL	REVISED -	STATION 20+00	STRUCTURAL SHEET NO. 60 OF 67 SHEETS
CHECKED - BKC	REVISED -		

FAS RTE.	SECTION	COUNTY	TOTAL SHEETS	SHEET NO.
171	17-00802-00-BR	LASALLE	93	72
	17-00142-00-BR	KENDALL		

WHA* 1087J17 | ILLINOIS | FED. AID PROJECT WZPE(199) | CONTRACT NO. 87683

KENDALL COUNTY
HIGHWAY DEPARTMENT

Joint Size	"C" at 50°F	"D" at 50°F
2''	2''	$1\frac{1}{2}$'' Min.
$2\frac{1}{2}$''	$2\frac{1}{2}$''	$1\frac{3}{4}$'' Min.
4''	3''	$2\frac{1}{2}$'' Min.

INSTALLATION NOTES

1. Install continuous seal in roadway, parapet, curb, and sidewalk.
2. Install anchor blocks as indicated.

NOTE A: Maximum spacing of anchor bolts shall be 12'' centers.

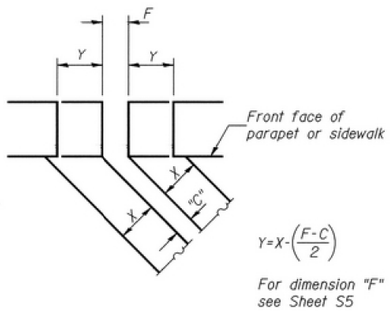

FORMING BLOCKOUT SKETCH

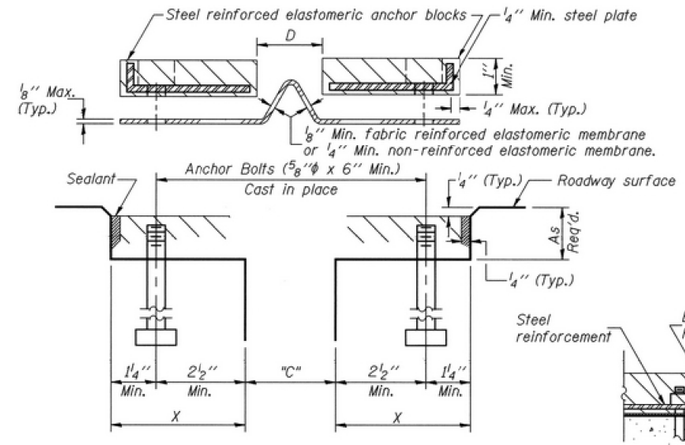

CROSS SECTION

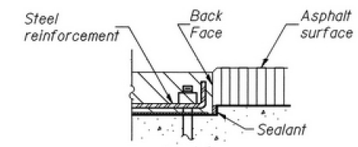

ANCHOR BLOCK WITH ASPHALT SURFACE

GENERAL NOTES

Continuous Seal Neoprene Expansion Joint shall consist of molded anchor blocks of elastomer and steel, field assembled over continuous lengths of elastomeric membrane.

The elastomeric membrane shall be premolded with a single or a double upward convolution that will have a "memory" to return to its molded position upon joint closure.

The convolution length shall be such that the extended length will not be greater than the manufactured length when the joint is fully expanded in its design range and will not protrude above the anchor blocks when the joint is fully compressed.

Joint openings shall be adjusted according to Article 503.10(c) of the Standard Specifications when the deck is poured at an ambient temperature other than 50° F.

The parapet and roadway membrane shall be made continuous by an approved vulcanizing process. Lapping will not be permitted.

SKEW LIMITATIONS

The details of the anchor blocks and the elastomeric membrane in the parapet, as shown, are for up to 50° skews.

For skews greater than 50°, the anchor blocks and the elastomeric membrane, installed according to dimension "D", might require modifications to insure a minimum clearance of $1\frac{1}{2}$'' from centerline of anchor studs to edge of parapet opening. The anchor blocks and the elastomeric membrane shall also be installed to the top of the parapet with the anchor studs spaced at ±12'' cts.

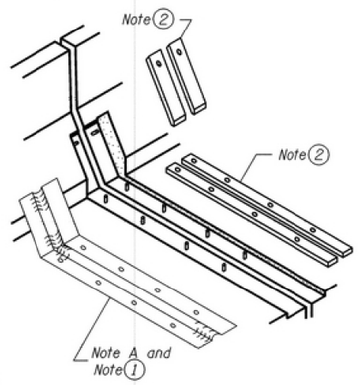

AT PARAPET

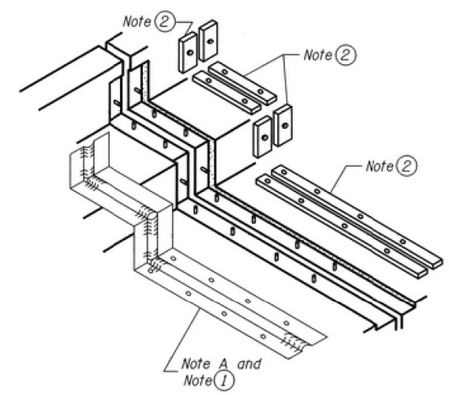

AT SIDEWALK OR MEDIAN

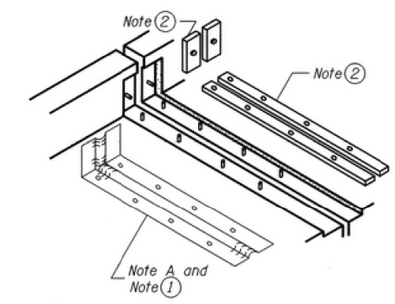

AT WALL

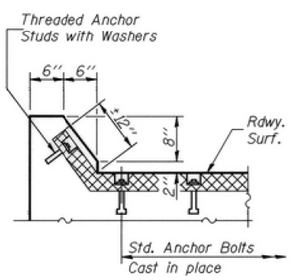

AT CURB

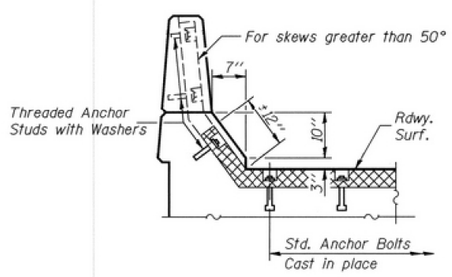

AT PARAPET

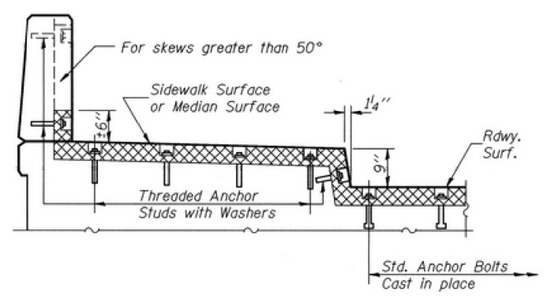

AT SIDEWALK OR MEDIAN
TYPICAL END TREATMENTS

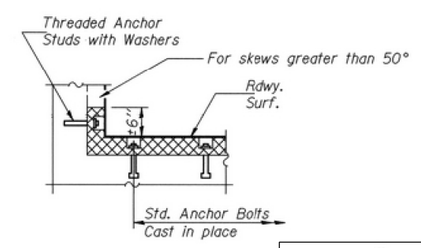

AT WALL

DESIGNED	LM
CHECKED	SF
DRAWN	CED
CHECKED	LM

DATE: 12-31-99

FOR INFORMATION ONLY

CONTINUOUS SEAL TYPE
NEOPRENE EXPANSION JOINTS
MILLINGTON BRIDGE OVER
FOX RIVER
SECTION 94-00036-00-BR
LASALLE-KENDALL COUNTIES
STATION 16+15.48
S.N. 047-3000

KENDALL COUNTY
HIGHWAY DEPARTMENT

The Illinois Coil-Lock Anchor Bolt is a proprietary item which is the property of the Illinois Department of Transportation. Use, reproduction or disclosure without express written permission is prohibited and protected under Federal copyright laws. The production and the fabrication of this bolt for use on highway projects in the State of Illinois shall be permitted and there shall be no incurred charges or fees to the manufacturer or the fabricator for producing or fabricating this bolt.

D	E	H	K	"d"
1"	1 1/8"	13/16"	1 3/4"	1/4"
~~1 1/4"~~	~~1 3/8"~~	~~1 1/16"~~	~~2"~~	~~3/8"~~
1 1/2"	1 5/8"	1 5/16"	2 1/8"	1/2"
~~2"~~	~~2 1/8"~~	~~1 13/16"~~	~~2 7/8"~~	~~1/2"~~
2 1/2"	2 5/8"	2 5/16"	3 3/8"	1"

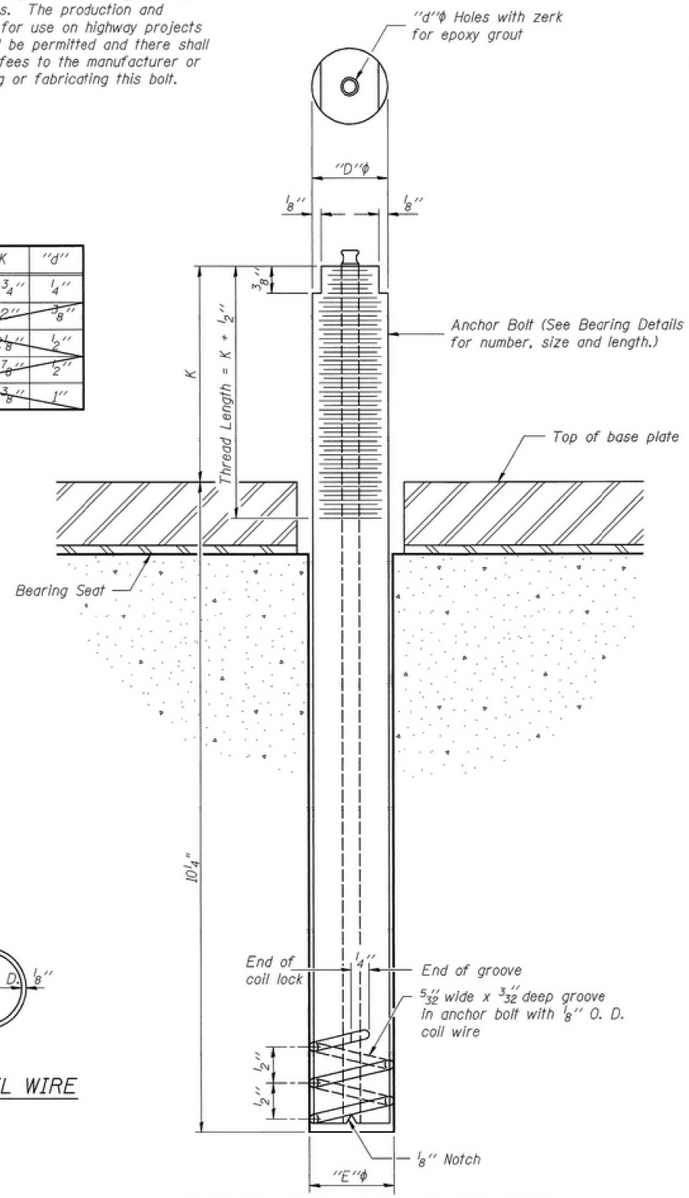

ILLINOIS COIL-LOCK ANCHOR BOLT

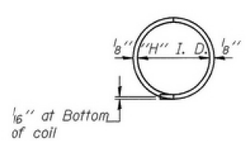

PLAN-COIL WIRE

MATERIALS FOR ILLINOIS COIL-LOCK ANCHOR BOLT

The anchor bolt shall be fabricated from cold drawn or hot finished seamless carbon steel mechanical tubing conforming to ASTM A519, Grade 1026 and supplied with hexagonal nuts and cut washers.

The coil wire shall be made of any suitable soft steel wire.

The finished anchor bolt shall be cleaned of rust and other foreign materials and wrapped or packaged to prevent contamination until they are installed.

The epoxy grout shall be a two-component, epoxy resin bonding system comforming to ASTM C881, Type I, Grade 1 and of a Class suitable for the temperature at installation.

INSTALLATION PROCEDURE for the ILLINOIS COIL-LOCK ANCHOR BOLT

1. With the coil wire in place,the bolt shall be inserted into the hole and turned clockwise to a snug fit in the hole. Nut and washer shall be placed on the bolt. The nut shall be tensioned until the steel base plates are held securely to the concrete bearing seat.
2. Epoxy grout shall be pumped through the zerk fitting with a pressure gun. Pumping shall continue until the epoxy overflows the hole around the bolt shank. After pumping is discontinued, excess epoxy shall be immediately wiped off.

ALTERNATE ANCHOR BOLTS

The Contractor may use, at his option, the capsule or the adhesive cartridge type anchor rods that have been previously tested and given a prior approval by the Department. The Contractor shall install these anchor rods in pre-drilled holes in accordance with the manufacturer's recommendations and procedures.

The capsule or the adhesive cartridge type anchor rods shall be a two part system composed of:

1. A threaded rod stud with nut and washer conforming to ASTM A307.
2. A sealed glass capsule or a sealed glass adhesive cartridge containing premeasured amounts of the adhesive chemical.

Location	Type
Pier 2	A307

ASTM F 1554 Grade 105, ASTM A449 and AASHTO M 314 Grade 105 anchor bolts may be substituted for the anchor bolts shown above.

GENERAL NOTES

Holes in the masonry for anchor bolts shall be drilled through the base plates to the diameter and depth shown or in accordance with the manufacturer's recommendation after beams or girders have been erected and adjusted.

Prior to setting the bolts, the holes shall be dry and all dust and loose particles shall be removed by the use of compressed air or vacuuming.

The anchor bolts, furnished and installed and including the epoxy grout or capsules shall not be paid for separately but shall be included in the unit bid price for "Furnishing and Erecting Structural Steel".

DESIGNED	JMC
CHECKED	SF
DRAWN	JMC
CHECKED	BLU

DATE: 12-31-99

FOR INFORMATION ONLY

ANCHOR BOLT DETAILS
FOR BEARINGS
MILLINGTON BRIDGE OVER
FOX RIVER
SECTION 94-00036-00-BR
LASALLE-KENDALL COUNTIES
STATION 16+15.48
S.N. 047-3000

WILLETT HOFMANN & ASSOCIATES INC
ENGINEERING ARCHITECTURE LAND SURVEYING
809 EAST 2ND STREET, DIXON, IL 61021-0367
T: 815-284-3381 DESIGN FIRM: #184-000918

DESIGNED - BKC	REVISED -	LASALLE & KENDALL COUNTY FAS 171(CH 3–MILLINGTON RD) OVER FOX RIVER STATION 20+00	2000 EXISTING PLANS STRUCTURE NO. 047-3000
CHECKED - PLP	REVISED -		
DRAWN - FDL	REVISED -		
CHECKED - BKC	REVISED -		STRUCTURAL SHEET NO. 62 OF 67 SHEETS

FAS RTE.	SECTION	COUNTY	TOTAL SHEETS	SHEET NO.
171	17-00802-00-BR	LASALLE	93	74
	17-00142-00-BR	KENDALL		

WHA* 1087J17 | ILLINOIS | FED. AID PROJECT WZPE(199) | CONTRACT NO. 87683

FILE = S:\PROJECTS\2017\1087J17.KCH\DESIGN\CAD.SHEETS\1087J17.2000 Existing Plans.dgn

ROUTE NO.	SECTION	COUNTY	TOTAL SHEETS	SHEET NO.
C.H. F.A.S. 171	94-00036-00-BR	LASALLE & KENDALL	25	24
FED. ROAD DIST. NO. 7	ILLINOIS	FED. AID PROJECT-		

SHEET NO. S17 OF S18 SHEETS

KENDALL COUNTY
HIGHWAY DEPARTMENT

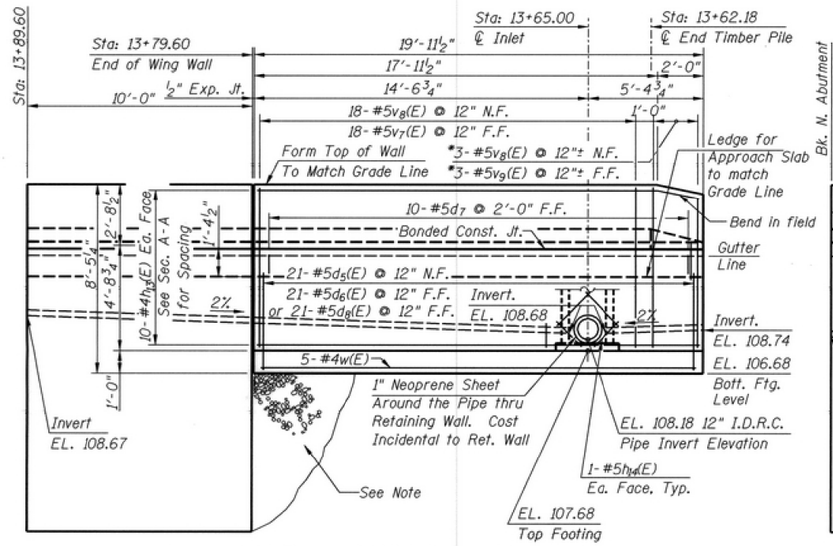

S.W. RETAINING WALL OUTSIDE ELEVATION

Looking S.E.

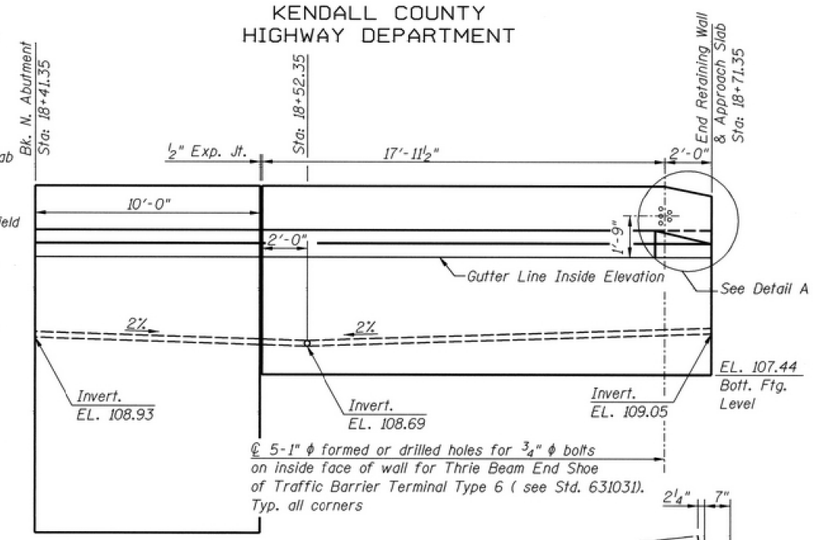

N.W. RETAINING WALL INSIDE ELEVATION

Looking N.W. (Shown)

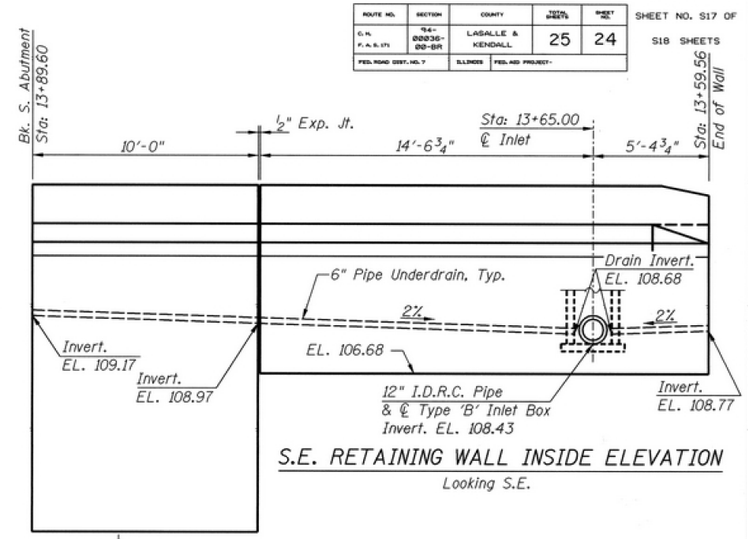

S.E. RETAINING WALL INSIDE ELEVATION

Looking S.E.

Note: Wing Wall Excavation Below the Retaining Wall Footing Shall be Back Filled with Granular Material in 8 inch Layers Compacted to the Min. of 95% of the Standard Laboratory Density in the Subgrade. See Standard Specifications for Road and Bridge Construction Section 301. Cost Incidental to Retaining Wall.

N.E. RETAINING WALL OUTSIDE ELEVATION

Looking N.W. (Similar)

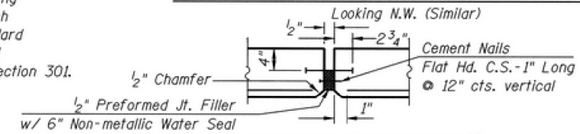

EXPANSION JOINT DETAIL

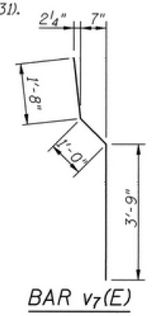

BAR v7(E)

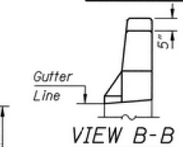

VIEW B-B

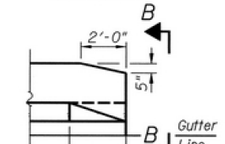

DETAIL A

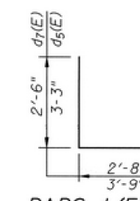

BARS $d_5(E)$ & $d_7(E)$

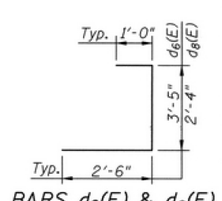

BARS $d_6(E)$ & $d_8(E)$

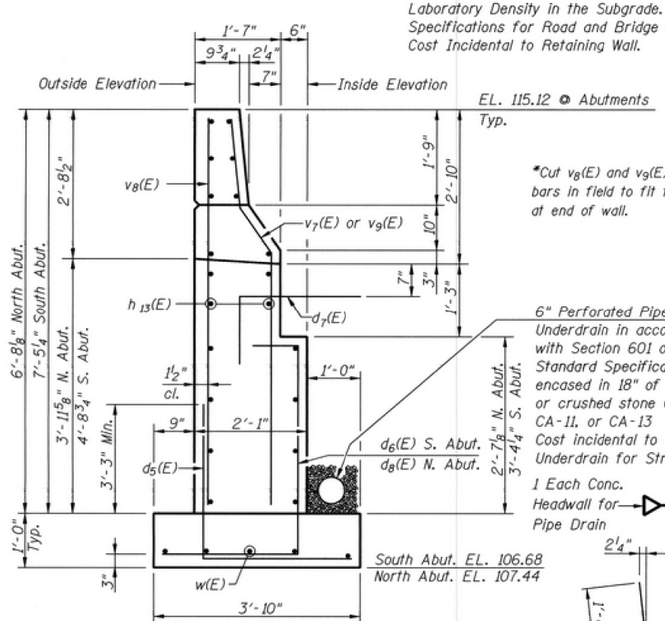

*Cut v8(E) and v9(E) bars in field to fit taper at end of wall.

6" Perforated Pipe Underdrain in accordance with Section 601 of the Standard Specifications encased in 18" of gravel or crushed stone CA-7, CA-11, or CA-13 Cost incidental to Pipe Underdrain for Structures

1 Each Conc. Headwall for Pipe Drain

10 L.F. Pipe Drain 6"

SECTION A-A

DESIGNED	LM
CHECKED	SF
DRAWN	CED
CHECKED	BLU

DATE: 12-31-99

N.F. = Near Face
F.F. = Far Face

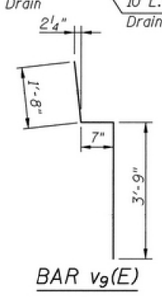

BAR v9(E)

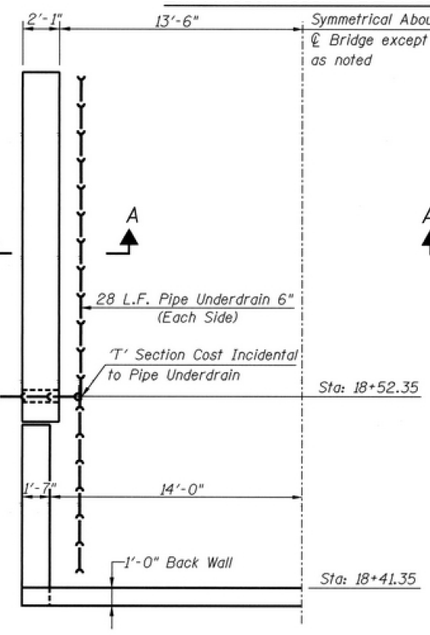

PIPE UNDERDRAIN @ NORTH ABUTMENT-PLAN

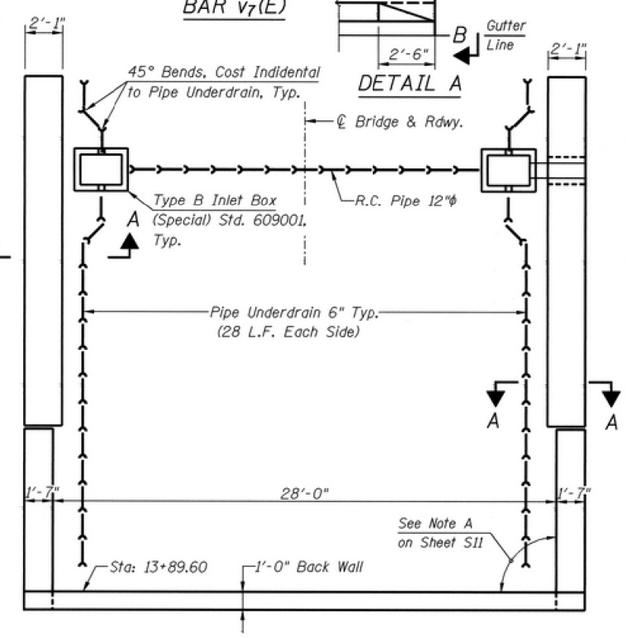

PIPE UNDERDRAIN @ SOUTH ABUTMENT-PLAN

BILL OF MATERIAL

Bar	Size	N. Abut.	S. Abut.	Total	Length	Shape
$d_5(E)$	#5	42	42	84	5'-11"	L
$d_6(E)$	#5	-	42	42	6'-11"	⌋
$d_7(E)$	#5	20	20	40	6'-3"	L
$d_8(E)$	#5	42	-	42	5'-10"	⌋
$h_{13}(E)$	#4	40	40	80	19'-7"	——
$h_{14}(E)$	#5	-	8	8	2'-6"	——
$v_7(E)$	#5	36	36	72	6'-5"	⌊
$v_8(E)$	#5	42	42	84	6'-2"	——
$v_9(E)$	#5	6	6	12	6'-0"	⌊
w(E)	#4	10	10	20	19'-7"	——

	Measure	N. Abut.	S. Abut.	Total
Structure Excavation	Cu. Yd.	60.6	70.2	130.8
Concrete Structures	Cu. Yd.	21.0	23.4	44.4
Reinforcement Bars, Epoxy Coated	Lbs.	1,850	1,920	3,770
Pipe Underdrain, 6"	Foot	66	56	122

RETAINING WALLS
MILLINGTON BRIDGE OVER
FOX RIVER
SECTION 94-00036-00-BR
LASALLE-KENDALL COUNTIES
STATION 16+15.48
S.N. 047-3000

FOR INFORMATION ONLY

WILLETT HOFMANN & ASSOCIATES INC
ENGINEERING ARCHITECTURE LAND SURVEYING
809 EAST 2ND STREET, DIXON, IL 61021-0367
T: 815-284-3381 DESIGN FIRM: #184-000918

DESIGNED - BKC	REVISED -	LASALLE & KENDALL COUNTY FAS 171(CH 3–MILLINGTON RD) OVER FOX RIVER STATION 20+00	2000 EXISTING PLANS STRUCTURE NO. 047-3000
CHECKED - PLP	REVISED -		
DRAWN - FDL	REVISED -		
CHECKED - BKC	REVISED -		STRUCTURAL SHEET NO. 63 OF 67 SHEETS

FAS RTE.	SECTION	COUNTY	TOTAL SHEETS	SHEET NO.
171	17-00802-00-BR	LASALLE	93	75
	17-00142-00-BR	KENDALL		

WHA* 1087J17 | ILLINOIS | FED. AID PROJECT WZPE(199) | CONTRACT NO. 87683

FILE = S:\PROJECTS\2017\1087J17-KCH\DESIGN\CAD_SHEETS\1087J17-2000 Existing Plans.dgn

KENDALL COUNTY
HIGHWAY DEPARTMENT

ROUTE NO.	SECTION	COUNTY	TOTAL SHEETS	SHEET NO.
C.H. F.A.S. 171	94-00036-00-BR	LASALLE & KENDALL	25	25
FED. ROAD DIST. NO. 7	ILLINOIS	FED. AID PROJECT-		

SHEET NO. S18 OF S18 SHEETS

PROJECT MILLINGTON ROAD BRIDGE
ROUTE Millington Road
SECTION --
BRIDGE Fox River
STATION --
DATE 3/22/95
BORED BY CB
CHECKED BY WCP
COUNTY Kendall/LaSalle
BORING NO. B-1
STATION 3+75
OFFSET 8'W of C.L.
SURFACE WATER ELEV. 89.3
GROUND WATER AT COMPLETION --
AFTER -- HOURS --

GROUND SURFACE 119.1
2" Bit. Conc. Pavement

Description	Depth	N	Qu kPa	W %
Slightly dense, damp, Brown SAND and GRAVEL, A-1-a, FILL	1	7 4 3		9
Medium dense, damp, Brown SAND and Gravel mixed with damp Dark Brown Silty LOAM, A-2-4, FILL	5	12 10 8		8
Slightly dense to medium dense, moist, Dark Brown LOAM, A-2-4, FILL	2	3 4 3		26
	3 10	3 3 3		21
		3 5 6		20
	4 15	4 5 6		22
	5	4 5 5		26
	6 20	4 5 6		19
Slightly dense to medium dense, moist, Dark Brown LOAM, A-2-4, FILL				
Medium dense to very dense, moist to damp Grey SAND and GRAVEL, A-1-a				
Occasional Cobbles				
End of Boring @ 30'				

10' - 4" Casing
30' - NX Casing

Depth	N	Qu kPa	W %
7	3 3 6		32
8	8 11 16		15
9	14 15 20		13
10	20 30 37		8
11	35 45 35		8
12	31 35 39		8
40			

PROJECT MILLINGTON ROAD BRIDGE
ROUTE Millington Road
SECTION --
BRIDGE Fox River
STATION --
DATE 3/20/95
BORED BY CB
CHECKED BY WCP
COUNTY Kendall/LaSalle
BORING NO. B-2
STATION 5+21
OFFSET 7'E of C.L. on Deck
SURFACE WATER ELEV. 89.3
GROUND WATER AT COMPLETION --
AFTER -- HOURS --

BRIDGE DECK SURFACE 119.1

River Bed @ 24.0'

Medium dense to very dense, damp, Grey SAND and GRAVEL, A-1-a

Depth	N	Qu kPa	W %
7	11 11 26		14
8	7 8 10		10
9	10 7 7		10
10	7 10 10		9
11	5 7 6		10
12	15 16 18		10
40			

PROJECT MILLINGTON ROAD BRIDGE
ROUTE Millington Road
SECTION --
BRIDGE Fox River
STATION --
DATE 3/21/95-3/22/95
BORED BY CB
CHECKED BY WCP
COUNTY Kendall/LaSalle
BORING NO. B-3
STATION 7+09
OFFSET 7'W of C.L.
SURFACE WATER ELEV. 89.3
GROUND WATER AT COMPLETION --
AFTER -- HOURS --

BRIDGE DECK SURFACE 119.1

River Bed @ 24.0'

Medium dense, damp, Grey SAND and GRAVEL, A-1-a

Dense, damp, Grey SAND, A-3

Medium dense, damp, Grey SAND and GRAVEL, A-1-a

Depth	N	Qu kPa	W %
7	5 7 9		12
8	4 9 8		10
9	4 9 7		12
10	7 11 12		12
11	11 14 16		12
12	7 7 8		12
40			

PROJECT MILLINGTON ROAD BRIDGE
ROUTE Millington Road
SECTION --
BRIDGE Fox River
STATION --
DATE 3/21/95
BORED BY CB
CHECKED BY WCP
COUNTY Kendall/LaSalle
BORING NO. B-4
STATION 8+46
OFFSET 6'E of C.L.
SURFACE WATER ELEV. 89.5
GROUND WATER AT COMPLETION --
AFTER -- HOURS --

GROUND SURFACE 119.3
Bit. Con. Pavement (3")

Description	Depth	N	Qu kPa	W %
Slightly dense, damp, Brown SAND and GRAVEL, and Dark Brown Silty LOAM, A-4, mixed FILL	1	3 3 3		11
Slightly dense to medium dense, Grey SAND and GRAVEL, A-1-a, FILL	5	3 5 6		7
	2	2 2 3		5
	3 10	6 9 6		5
	4	4 5 6		16
	15	10 9 9		13
	5	10 8 7		14
Very stiff, moist, Dark Brown Silty CLAY, A-6 to A-7-6	6 20	8 7 5		18
Very stiff, moist, Dark Brown Silty CLAY, A-6 to A-7-6				
Medium dense, wet, Grey SAND and GRAVEL, A-1-a				
Medium dense, moist, Dark Grey Sandy LOAM, A-4				
Medium dense, damp, Grey SAND and GRAVEL, A-1-a				
Dense to very dense, moist, Grey SILT LOAM, A-4				
Dense, moist, Grey SAND, A-3				

Depth	N	Qu kPa	W %
7	4 5 6		32
8	9 4 8	2.5 P	26
9	8 10 12		10
10	12 14 17		20
11	16 23 20		17
12	23 20 25		18
40			

BORING NO. B-5
PROJECT MILLINGTON ROAD BRIDGE
ROUTE Millington Road
SECTION --
BRIDGE Fox River
STATION --
DATE 3/22/95
BORED BY CB
CHECKED BY WCP
COUNTY Kendall/LaSalle
STATION 3+44
OFFSET 7'E of C.L.
SURFACE WATER ELEV. --
GROUND WATER AT COMPLETION --
AFTER -- HOURS --

GROUND SURFACE 111.9
1.5" Bit. Conc. over 9" CA-06

Description	Depth	N	Qu kPa	W %
Very stiff, damp, Brown Sandy Clay LOAM, A-6, FILL	1	3 3 3	2.51 (0)	15
Stiff, moist, Dark Brown Silty Clay LOAM, A-6, FILL	5	3 4 11	1.51 B	22
Stiff, moist, Dark Brown Silty Clay LOAM, A-6, and Brown SAND and GRAVEL, mixed FILL	2	5 3 4	1.0 P	20
End of Boring @ 7.5'	3 10			
	4			
	15			
	5			
	6 20			

BORING NO. B-2
CONTINUED

Description	Depth	N	Qu kPa	W %
Medium dense to very dense, damp, Grey SAND and Gravel, A-1-a Occasional Cobles from 41' to 45.5'	13	15 22 28		13
	45 14	26 36 16		13
Medium dense, damp, Grey Sandy LOAM, A-2-4	15	7 10 11		11
Very stiff, damp, Grey Silty LOAM, A-4 to A-6	50	7 8 11	2.41 (0)	12
Medium dense, moist, Grey LOAM, A-2-4	16	6 8 9		18
Medium dense, moist, Grey Silty LOAM, A-4	55 17	4 3 7		20
Very dense, damp, Grey Sandy LOAM, A-4		14 15 36		12
Dense, moist, Grey SAND, A-3	18 60	16 17 19		21
Hard to very stiff, damp, Grey Silty Clay LOAM, A-6	19	9 20 32	4.46 B	9
	65	12 22 24	4.68 B	10

Description	Depth	N	Qu kPa	W %
Hard to very stiff, damp, Grey Silty Clay LOAM, A-6	20	18	3.80 B	18 21
		114/12"		
Extremely dense, wet, Grey SAND and GRAVEL, A-1-a	21			
Dense, moist, Grey Silty LOAM, A-4	70	11 12 23		19
End of Boring @ 70.0'				
55' - NX Casing	22			
	23 75			
	24			
	80			
	25			
	26 85			
	27			
	90			

BORING NO. B-3
CONTINUED

Description	Depth	N	Qu kPa	W %
Medium dense, damp, Grey SAND and Gravel, A-1-a	13	6 7 9		14
	45 14	10 11 12		16
Dense, wet Grey SAND, A-3	15	20 21 23		15
Hard, damp, Grey Silty Clay LOAM, A-6	50 16	9 13 14	4.10 B	10
Dense, wet, Grey SAND, A-3	55 17	13 14 16		16
		10 17 21		21
		17 21 25		16
Hard to very stiff, damp, Silty Clay LOAM, A-6	18 60	8 16 15	4.85 B	11
	19	8 21 38	3.69 B	11
Very dense to extremely dense, damp, Grey SAND and GRAVEL, A-1-a; in Grey Silty CLAY, A-6 Matrix	65	32 32 24		10
Very dense to extremely dense, damp, Grey SAND and GRAVEL, A-1-a; in Grey Silty CLAY, A-6 Matrix Occasional Cobbles	20	32 32 58		10
Very stiff, moist, Grey Silty Clay LOAM, A-6	21 70	8 14 20	2.13 B	20
End of Boring @ 70.0'				
52' - NX Casing	22			
	23 75			
	24			
	80			
	25			
	26 85			
	27			
	90			

BORING NO. B-4
CONTINUED

Description	Depth	N	Qu kPa	W %
Dense, moist, grey SAND, A-3	13	12 12 18	3.30 B	14
Very stiff, damp, Grey Silty Clay LOAM, A-6	45 14	8 9 10	2.79 (0)	11
Very stiff to hard, damp, Grey Silty Clay LOAM, A-6	15 50	8 10 12	3.91 (0)	11
		10 11 15	4.41 (0)	10
	16	20 29 17	4.5+ P	8
	55 17	7 16 18	6.62 B	10
		11 13 19	4.5+ P	16
Dense, moist, Grey Silt LOAM, A-4	18 60	10 15 20		19
End of Boring @ 60.0'	19			
27' - 4" Casing 45' - NX Casing	65			

Description	Depth	N	Qu kPa	W %
Very stiff, moist, Dark Brown Silty CLAY, A-6 to A-7-6	20			
Medium dense, wet, Grey SAND and GRAVEL, A-1-a	21			
Medium dense, moist, Dark Grey Sandy LOAM, A-4	70			
Medium dense, damp, Grey SAND and GRAVEL, A-1-a				
Dense to very dense, moist, Grey SILT LOAM, A-4				
Dense, moist, Grey SAND, A-3				

Depth	N	Qu kPa	W %
12	23 20 25		18
40			

DESIGNED	LM
CHECKED	LM
DRAWN	CED
CHECKED	BLU

DATE: 12-31-99

SOIL BORING LOGS
MILLINGTON BRIDGE OVER
FOX RIVER
SECTION 94-00036-00-BR
LASALLE-KENDALL COUNTIES
STATION 16+15.48
S.N. 047-3000

FOR INFORMATION ONLY

WILLETT HOFMANN & ASSOCIATES INC
ENGINEERING ARCHITECTURE LAND SURVEYING
809 EAST 2ND STREET, DIXON, IL 61021-0367
T: 815-284-3381 DESIGN FIRM: #184-000918

DESIGNED - BKC	REVISED -		
CHECKED - PLP	REVISED -		
DRAWN - FDL	REVISED -		
CHECKED - BKC	REVISED -		

LASALLE & KENDALL COUNTY
FAS 171(CH 3–MILLINGTON RD) OVER FOX RIVER
STATION 20+00

2000 EXISTING PLANS
STRUCTURE NO. 047-3000

STRUCTURAL SHEET NO. 64 OF 67 SHEETS

FAS RTE.	SECTION	COUNTY	TOTAL SHEETS	SHEET NO.
171	17-00802-00-BR	LASALLE	93	76
	17-00142-00-BR	KENDALL		

WHA* 1087J17 | ILLINOIS | FED. AID PROJECT WZPE(199) | CONTRACT NO. 87683

FILE = S:\PROJECTS\2017\1087J17.KCH\DESIGN\CAD_SHEETS\1087J17-2000 Existing Plans.dgn

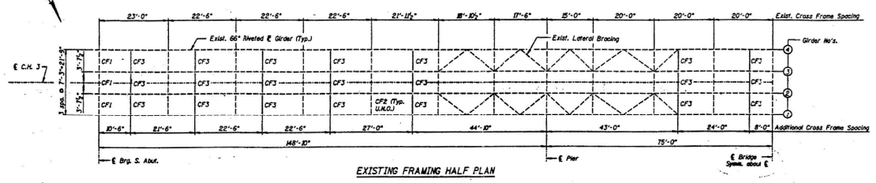

EXISTING FRAMING HALF PLAN

SHOP DRAWING REVIEW

ENGINEER'S REVIEW	RESPONSE REQUIRED OF CONTRACTOR
No exceptions taken ☐ Rejected ☒ Note markings ☐ Corrections Attached ☐	Confirm ☐ Resubmit ☒

Engineer's review is for general conformance with the design concept and contract documents. Markings or comments shall not be construed as relieving the Contractor from compliance with the project plans and specifications, nor departure therefrom. The contractor remains responsible for details and accuracy, for confirming and correlating all quantities and dimensions, for selecting fabrication processes, for techniques of assembly, and for performing his work in a safe manner.

Bowman Associates, Inc.
By: B. M. Bowman Date 5-18-00

FOR INFORMATION ONLY

BILL OF MATERIALS

CUST LEN TROVERO POS B/HD

QUANTITY ASSEM	QUANTITY COMP	MARK	FM	MATERIAL DESCRIPTION THICKNESS-SECT-SIZE X LENGTH	SPEC	MISC	PRODUCING MILL	PRODUCING HEAT #	WEIGHT COMPONENT	WEIGHT ASSEMBLY
42		CF3	P	CROSS FRAME						
	84	P1		3/8 PLT 12 x 1'-1¼						
	84	P2		3/8 PL 15 x 1'-4						
	42	P3		3/8 PLT 4 x 0'-7						
	84	A1		5/16 L 3½ x 3½ x 6'-5						
	42	A2		3/8 L 4 x 4 x 4'-10						
		- FIELD		FASTNERS -						
588		M4		3/4 ϕ x 2" HEX HD. BOLT	A325					
588		M4		3/4 ϕ HVY HEX NUT	DH					
588		M4		3/4 ϕ HRD. W/SHR						
360		P4	P	1/2 PLT 6 x 0'-7 (STIFF. PL)						
480		P5	P	1/2 PLT 6 x 0'-10 (STIFF. PL)						
3360		M4		3/4 ϕ x 2¼" HEX HD BOLT	A325					
3360		M4		3/4 ϕ HVY HEX NUT	DH					
3360		M4		3/4 ϕ HRD. W/SHR						
7		M4		3/4 ϕ x 2" HEX HD BOLT	A325					
7		M4		3/4 ϕ x 2¼" HEX HD BOLT	A325					
14		M4		3/4 ϕ HVY HEX NUT	DH					
14		M4		3/4 ϕ HRD. W/SHR						

VERIFY

2 WASHERS/BOLT

VERIFY

REVISE – CONSIDER COVER PL'S EFFECT ON BOLT LENGTH. BELIEVE TOTAL BOLT COUNT FOR THESE BOLTS = 1680

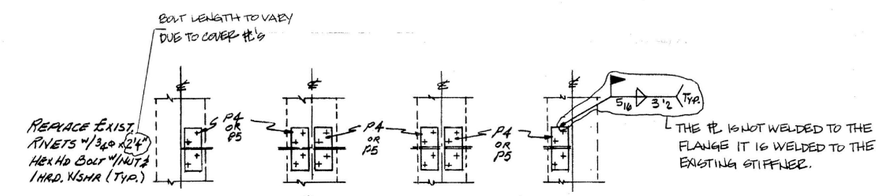

PLAN ~ BOT. FLANGE @ CROSS FRAMES CF2 & CF3
(TOP FLANGE SIMILAR)

Note:
Existing stiffners are angles w/ outstanding legs 5/16" thick.

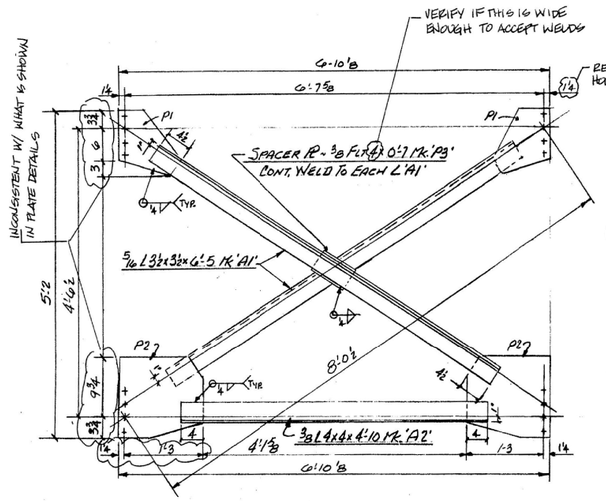

CROSS FRAME CF3
(42 THIS REQ'D)

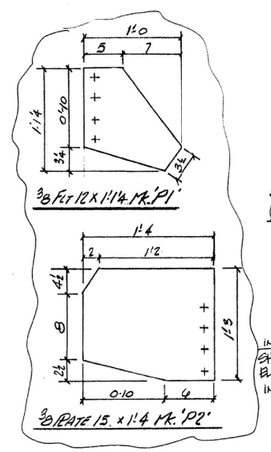

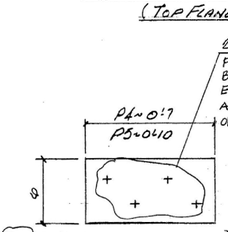

360 PL: 1/2 PLT 6 x 0'-7 MK. 'P4'
480 PL: 1/2 PLT 6 x 0'-10 MK. 'P5'
VERIFY
QNTY & LENGTH FIELD VERIFIED

+ FIELD LOCATE & DRILL 13/16 ϕ HOLES FOR 3/4 ϕ BOLTS
ONLY HOLES FOR PL'S CONNECTED TO TOP & BOTTOM FLANGES, HOLES FOR CROSS FRAMES SHALL BE 15/16" ϕ & REQUIRE TWO (2) HARDENED WASHERS

MATERIAL
STEEL: AASHTO M270 GR 250 (A36) W/ 60 CHARPY
HARDWARE - A325 MECH. GALV. PER B-695, CLASS 50

FINISH
Blast Clean Near White to S.S. PC-SP10
with an Anchor Profile of 1 - 2.5 Mils
Shop Paint One Coat (H.S. ZINC SILICATE PRIMER)
Inorganic zinc-rich primer

FAS 171 (C.H. 3) ~ KENDALL COUNTY, IL.
MILLINGTON BRIDGE OVER FOX RIVER
SECTION: 94-00036-00-BR
PROJECT: BHS-171 (106)
CONTRACT # 87180 ~ S.N. 047-3000

P.H. DREW INC. P.O. BOX 34295 INDIANAPOLIS, INDIANA 46234

FIELD BOLT RECAP
A325 BOLT WITH HD. WASH. U.N.

REV. NO.	DATE	DESCRIPTION	MADE BY
		REVISION SCHEDULE	

MATERIAL:
CLEANING:
SHOP PAINT:
WELD. ELECTRODE:
OPEN HOLES:
SHOP BOLTS:
REF. DRWG'S: SHT 57 of 518

DATE	ISSUED FOR	PRINTS	SEPIAS
5-9-00	APPROVAL	4	

PRINT RECORD

CONTR: LEN TROVERO CONST
REHAB OF CROSS FRAMES CF2
NEW CROSS FRAMES CF3

DRAWN BY	CHECKED BY	SHEET NO.	JOB NO.
B.B		1	00-1073

FILE = S:\PROJECTS\2017\1087J17_KCH\DESIGN\CAD_SHEETS\1087J17_Existing Cross Brace.dgn

WILLETT HOFMANN & ASSOCIATES, INC
ENGINEERING ARCHITECTURE LAND SURVEYING
809 EAST 2ND STREET, DIXON, IL 61021-0367
T: 815-284-3381 DESIGN FIRM: #184-000918

DESIGNED - BKC	REVISED -		
CHECKED - PLP	REVISED -		
DRAWN - FDL	REVISED -		
CHECKED - BKC	REVISED -		

LASALLE & KENDALL COUNTY
FAS 171(CH 3–MILLINGTON RD) OVER FOX RIVER
STATION 20+00

EXISTING CROSS FRAME SHOP DRAWING
STRUCTURE NO. 047-3000
STRUCTURAL SHEET NO. 65 OF 67 SHEETS

FAS RTE.	SECTION	COUNTY	TOTAL SHEETS	SHEET NO.
171	17-00802-00-BR	LASALLE	93	77
	17-00142-00-BR	KENDALL		

WHA* 1087J17 | ILLINOIS | FED. AID PROJECT WZPE(199) | CONTRACT NO. 87683

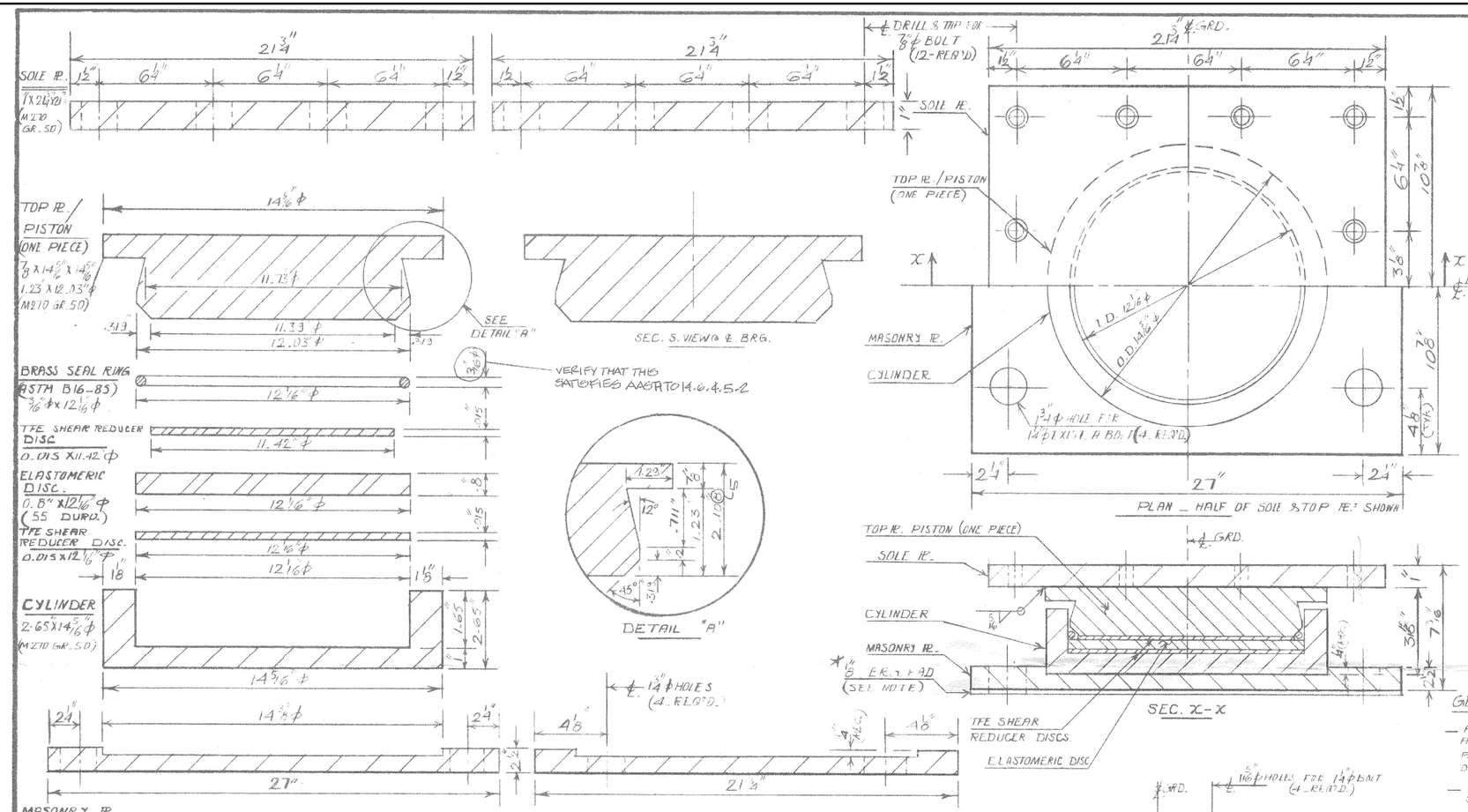

BILL OF MATERIALS			
QTY.	DESCRIPTION	SIZE	MAT'L.
4	SOLE PL.	1"X21¼"X21¾"	AASHTO M270 GR. 50
4	TOP PL./PISTON (ONE PIECE)	7/8"X14 5/16"X14 5/16" / 1.23"X12.03"	»
4	BRASS SEAL RING	3/16"φ X 12 1/16"φ	ASTM B16-85
4	TFE SHEAR REDUCER DISC	0.015"X12 1/16"	TFE
4		0.015"X11.42"φ	
4	ELASTOMER. DISC	0.80"X12 1/16"φ	55 DURO.
4	CYLINDER	2.65"X14 5/16"φ	AASHTO M270 GR. 50
4	MASONRY PL.	2½"X27"X21¾"	»
4	1/8" ELS. PAD	1/8"X27"X21¾"	PREFORMED FABRIC PAD
8	1/8" ADJUSTING SHIM	1/8"X27"X21¾"	M270 GR. 36
48	H.S. BOLT	7/8"φ X 5¾" LG.	ASTM A307-82 (ALV.)
16		1¼"φ X 5¾"	
48	HEX. NUT (FOR)	7/8"φ BOLT	ASTM A563 DH
(32)		1¼"φ BOLT	
48	FLAT WASHER (FOR)	7/8"φ BOLT	ASTM F436
16		1¼"φ BOLT	
16	PL. WASHER (FOR 1¼"φ EXIST. BOLT)	2¾"X2¾"X3/8"	M270 GR. 36
4	BOLSTER	SEE DETAIL	M270 GR. 50

VERIFY — 2 WASHERS PER BOLT

FIXED POT BEARING ASS'Y.

4 REQ'D @ PIER #1 - FRM_400_NS-____ (MK#F_1)

GENERAL NOTES:

- ALL STRUCTURAL STEEL TO BE USED FOR FABRICATING THE BRG'S SHALL BE AASHTO M270 GR. 50 UNLESS NOTED, BLAST CLEANED NEAR WHITE TO A PROFILE OF 1 TO 2.5 MILS PER SSPC - SP 10, WITH ONE SHOP COAT OF INORGANIC ZINC RICH PRIMER.
- POT BEARING TO BE FABRICATED IN ACCORDANCE WITH THE STANDARD SPECIFICATIONS FOR ROAD AND BRIDGE CONSTRUCTION - I.D.O.T., AASHTO STANDARD SPECIFICATION AND SPECIAL PROVISION.
- THE BEARING ASSEMBLIES SHALL BE CAPABLE TO TRANSMIT THE DESIGNATED HORIZONTAL FORCE = 56 KIPS.
- TOTAL ROTATION CAPACITY = 0.02 RAD.

★NOTE:

- INCLUDED WITH EACH BRG. SHALL BE: 1 - 1/8"X27"X21¾" B/S PAD #, W/4 - 1¾"φ HOLES SPACED TO MATCH MASONRY PL. #, AND 2 - 1/8"X21¾"X21¾" ADJUSTING SHIM #'S W/12 - 15/16"φ HOLES LOCATED AT THE SAME CENTERLINES AS SOLE

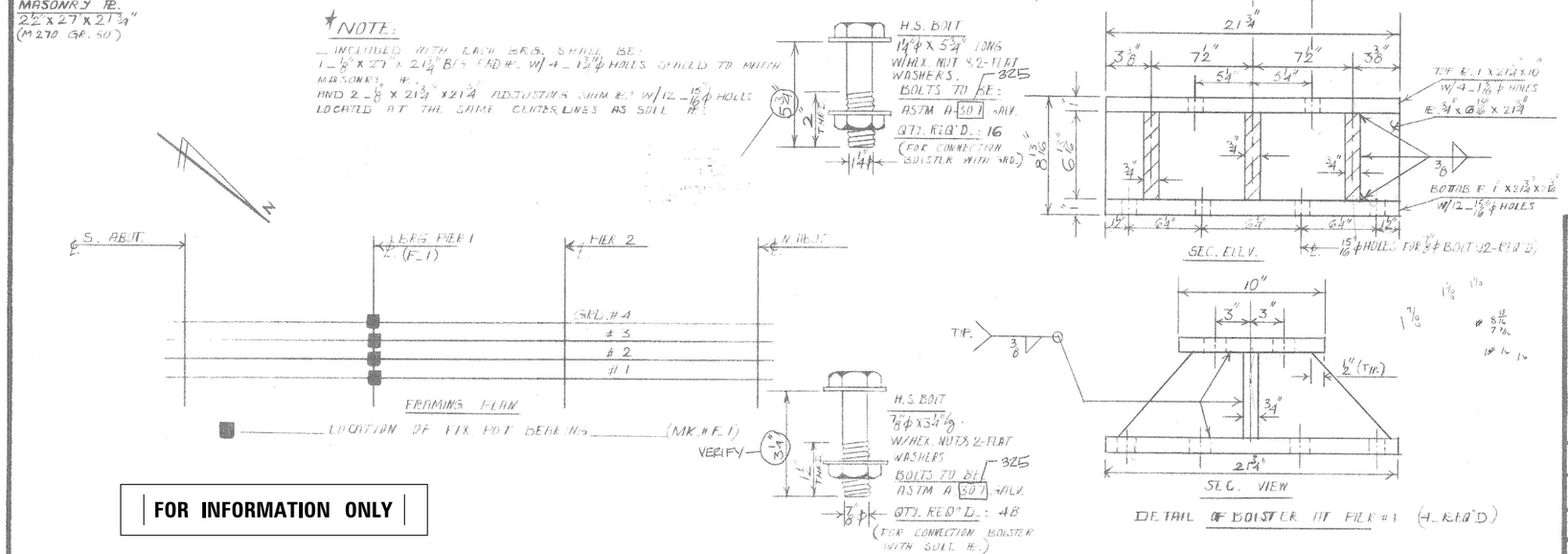

LOCATION OF FIX. POT BEARINGS ____ (MK#F_1)

FOR INFORMATION ONLY

SHOP DRAWING REVIEW

ENGINEER'S REVIEW	RESPONSE REQUIRED OF CONTRACTOR
No exceptions taken ☐ Note markings ☒ Rejected ☐ Comments Attached ☐	Confirm ☐ Resubmit ☐ NO RESUBMITTAL REQ'D.

Engineer's review is for general conformance with the design concept and contract documents. Markings or comments shall not be construed as relieving the Contractor from compliance with the project plans and specifications, nor departures therefrom. The Contractor remains responsible for details and accuracy, for confirming and correlating all quantities and dimensions, for selecting fabrication processes, for techniques of assembly, and for performing his work in a safe manner.

Bowman Bennett & Associates, Company

REVISED BY D. Wiemann Date 5-26-00

TOBI ENGINEERING, INC. 3126 West Lake Avenue Glenview, Illinois 60025

FIX. POT BEARING DETAILS

PROJECT: BHS-171 (106) FAS 171 (CH 3)

SECTION: 34-00036-00-BR STA. 16+15.48 MILLINGTON BRIDGE OVER FOX RIVER

DRAWN BY: N.A.	DATE: 5-4-00	CONTRACT: 87181
CHECKED BY:	DATE:	COUNTY: KENDALL (C-93-036-98)
CHECKED BY:	DATE:	STRUCTURE: 047-3000
APPROVED BY:	DATE:	CONTRACTOR: LEN TROVERO CONSTRUCTION — DRAWING NO: I-00-96

WILLETT HOFMANN & ASSOCIATES INC
ENGINEERING ARCHITECTURE LAND SURVEYING
809 EAST 2ND STREET, DIXON, IL 61021-0367
T: 815-284-3381 DESIGN FIRM: #184-000918

DESIGNED - BKC	REVISED -		
CHECKED - PLP	REVISED -		
DRAWN - FDL	REVISED -		
CHECKED - BKC	REVISED -		

LASALLE & KENDALL COUNTY
FAS 171(CH 3-MILLINGTON RD) OVER FOX RIVER
STATION 20+00

EXISTING BEARING SHOP DRAWING FOR PIER #1
STRUCTURE NO. 047-3000

STRUCTURAL SHEET NO. 66 OF 67 SHEETS

FAS RTE.	SECTION	COUNTY	TOTAL SHEETS	SHEET NO.
171	17-00802-00-BR	LASALLE	93	78
	17-00142-00-BR	KENDALL		

WHA# 1087J17 ILLINOIS FED. AID PROJECT WZPE(199) CONTRACT NO. 87683

FILE = S:\PROJECTS\2017\1087J17_KCH\DESIGN\CAD_SHEETS\1087J17_Existing Bearings.dgn

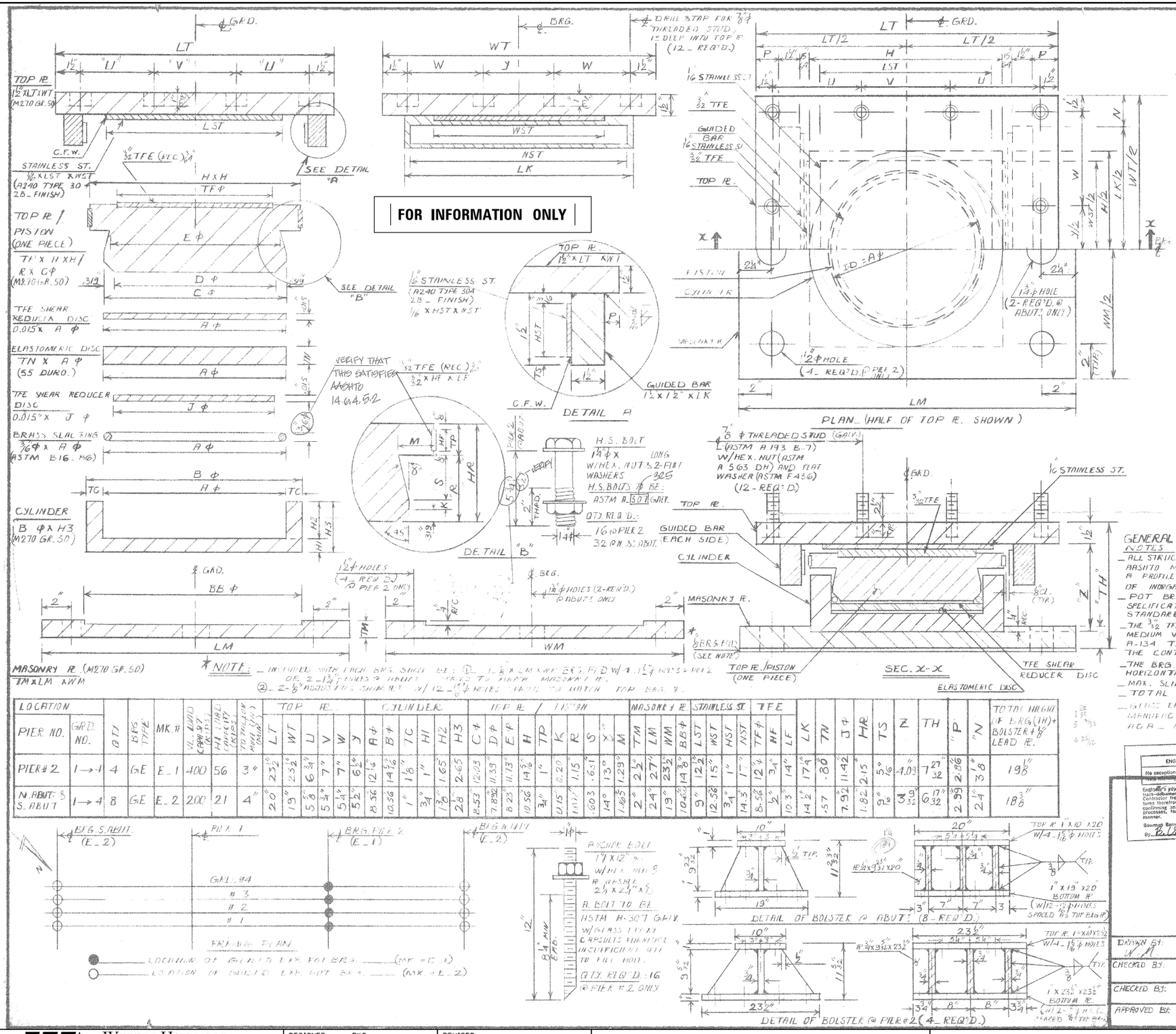

BILL OF MATERIAL

QTY.	DESCRIPTION	SIZE	MAT'L.
4	TOP BRG. PL.	1½ x 23½ x 23½	AASHTO M270 GR. 50
8		1½ x 19 x 29	
4	MASONRY PL	2 x 27 x 23½	"
8		2 x 21 x [illegible]	
4	TOP PL / PISTON (ONE PIECE)	1 x 14½ x 14½ / 1.15 x 12.42	"
8		¾ x 14½ x 0.56 / 0.52 x 9.21	
4	CYLINDER	2.65 x 14½	"
8		2.65 x 10.56	
8	GUIDED BAR	1½ x 1½ x 17½	"
16		12 x 12 x 14½	
144	THREADED STUD	⅞ ϕ x 3½	ASTM A 193 B-7
144	HEX. NUT (FOR)	⅞ / STUD	ASTM A563 DH
144	FLAT WASHER (FOR)	⅞ / STUD	ASTM F 436
4	1/16 STAINLESS ST.	1/16 x 12½ x 15	ASTM A240 TYPE 304 - W/20 RMS (MIRROR FINISH)
8		1/16 x 1½ x 17	
8		1/16 x 3½ x 12.56	
16		1/16 x 3½ x 14.3	
4	3/32 TFE	3/32 x 12 ϕ	MOLDED VIRGIN (UNFILLED) POLYMER
8		3/32 x 3½ x 14	
8		3/32 x 3 x 12 ϕ	
16		3/32 x 2½ x 0.37	
4	TFE SHEAR REDUCER DISC	0.015 x 12 ϕ	"
8		0.015 x 8.56 ϕ	
4		0.015 x 11.42 ϕ	
8		0.015 x 7.92 ϕ	
4	ELASTOMERIC DISC	0.50 x 12 ϕ	55 DURO.
8		0.50 x 8.56 ϕ	
4	BRASS SEAL RING	3/16 ϕ x 12½ ϕ	ASTM B16-B6
8		3/16 ϕ x 8.50 ϕ	
4	"A" BRG. PAD	¼ x 27 x 23½	PREFORMED FABRIC PAD.
8		¼ x 24 x 13½	
8	"B" ADJUSTING SHIM	⅛ x 23½ x 23½	M270 GR. 36
16		⅛ x 19 x 20	
16	ANCHOR BOLT	1 ϕ x 12	ASTM A307 GALV.
16	HEX. NUT (FOR)	1 ϕ A. BOLT	"
16	PL WASHER	2½ x 2½ x ⅜	"
16	HEX NUT (FOR)	1½ ϕ A. BOLT	"
16	PL WASHER	2½ x 2½ x ⅜	"
16 SET	GLASS EPOXY CAPSULE	1 - 1 ϕ SET / A. BOLT	BY MOORE CONSTRUCT.
	STEEL EXTENSION	SEE DETAILS	M270 GR. 50
16	H.S. BOLT	1¼ ϕ x 5½	ASTM A307 GALV.
32		1¼ ϕ x 3½	
48	HEX. NUT (FOR)	1¼ ϕ BOLT	ASTM A563 DH
96	FLAT WASHER (FOR)	1¼ ϕ BOLT	ASTM A436

GENERAL NOTES

- ALL STRUCTURAL STEEL PL USED FOR FABRICATING THE BRG. SHALL BE AASHTO M270 GR. 50 UNLESS NOTED. BLAST CLEANED NEAR WHITE TO A PROFILE OF 1 TO 2.5 MILS PER SSPC - SP10, WITH ONE SHOP COAT OF INORGANIC ZINC RICH PRIMER.
- POT BRG. TO BE FABRICATED IN ACCORDANCE WITH THE STANDARD SPECIFICATIONS FOR ROAD AND BRIDGE CONSTRUCTION I.D.O.T., AASHTO STANDARD SPECIFICATION AND SPECIAL PROVISION.
- THE 3/32" TFE SHEET SHALL BE BONDED DIRECTLY TO THE PISTON WITH A TWO PART MEDIUM VISCOSITY EPOXY RESIN, CONFORMING TO FEDERAL SPEC. MMM A-134 TYPE I, THE BOND AGENT SHALL BE APPLIED ON THE FULL AREA OF THE CONTACT AREA.
- THE BRG. ASSEMBLY SHALL BE CAPABLE TO TRANSMIT THE DESIGNATED HORIZONTAL FORCE.
- MAX. SLIDING COEFFICIENT OF FRICTION = 0.03
- TOTAL ROTATION CAPACITY (MIN) = 0.02 RAD.
- GLASS EPOXY CAPSULE FOR USE WITH H.S. BOLTS SHALL BE MANUFACTURED BY MOORE CONSTRUCTION PRODUCTS AGR - NO. 100.

★ NOTE:

- INCLUDED WITH EACH BRG. SHEET IS: ① - 1 - 1/8" x LM x WM BRG. PAD W/ 4 - 1 1/4" HOLES @ PIER 2 OR 2 - 1 3/4" HOLES @ ABUT. FACED TO MATCH MASONRY PL.
② - 2 - 1/8" ADJUSTING SHIM SET W/ 12 - 1 3/4" HOLES FACED TO MATCH TOP BRG. PL.

MASONRY PL (M270 GR. 50)
TM x LM x WM

LOCATION							TOP PL						CYLINDER					TOP PL / PISTON										MASONRY PL			STAINLESS ST.		TFE												TOTAL HEIGHT OF BRG. (IH) + BOLSTER + 1/8" LEAD PL.
PIER NO.	GRD. NO.	QTY	BRG TYPE	MK. #	VL. LOAD CAPACITY (KIPS)	HT. TRAV. (INCHES)	TOP BRG. ROTATION (DEGREES)	LT	WT	U	V	W	Y	A ϕ	B ϕ	TC	HI	H2	H3	C ϕ	D ϕ	E ϕ	H	TP	K	R	S	X	M	TM	LM	WM	LST	WST	HST	NST	TF ϕ	HF	LF	LK	TN	J ϕ	HR	TS	Z	TH	P	N	
PIER #2	1 → 4	4	GE	E_1	400	56	3°	23½	23½	6¾	7"	7"	6½	12½	14½	1⅛	1"	1.65	2.65	12.03	11.39	11.73	14⅝	1"	0.20	1.15	.6.31	13°	1.293	2½	27"	23½	14⅜	12½	15"	1"	12½	3¼	14"	17¼	.80	11.42	2.15	5⅛	4.09	7 27/32	2.86	1⅛	19⅛
N. ABUT. & S. ABUT.	1 → 4	8	GE	E_2	200	21	4°	20"	19"	5⅝	5¾	5¼	5½	8.56	10.56	1"	3¼	1⅞	2⅞	8.53	7.832	11.13	14⅝	¾	0.15	1.117	.603	14°	1.165	2"	24"	19"	10½	9"	12.56	3¼	14.3"	1"	10.3"	14½	.57	7.92	1.82	9⅛	3.9 3/32	6 17/32	2.99	2¼	18⅞

SHOP DRAWING REVIEW

ENGINEER'S REVIEW	RESPONSE REQUIRED OF CONTRACTOR
No exceptions taken ☐ Rejected ☐ Comments ☐ Not in compliance ☒	Confirm ☐ No resubmittal required ☐ Resubmit ☐

Engineer's review is for general conformance with the design concept and contract documents. Review comments do not relieve Contractor from compliance with the project plans and specifications, nor departures therefrom. The Contractor remains responsible for dimensions, for selecting fabrication processes, for techniques of assembly, and for performing his work in a safe manner.

Bowman Barrett & Associates Engineers
By: R. Vaternaugh
Date: 5-26-00

TOBI ENGINEERING, INC.
3126 West Lake Avenue
Glenview, Illinois 60025

GUIDED EXPANSION POT BEARING

PROJECT: BHS-171 (IDG) FAS 171 (CH. 3)
SECTION: 94-00036-00-BR STA. 16+15.48
MILLINGTON BRIDGE OVER FOX RIVER

DRAWN BY:	DATE: 5-4-00	CONTRACT: 87181
CHECKED BY:	DATE:	COUNTY: KENDALL (C-13-036-98)
CHECKED BY:	DAT	STRUCTURE: 047-3000
APPROVED BY:	DATE:	CONTRACTOR: LEN TROVERO CONSTRUCTION — DRAWING NO: I-00-95

WILLETT HOFMANN & ASSOCIATES INC
ENGINEERING ARCHITECTURE LAND SURVEYING
809 EAST 2ND STREET, DIXON, IL 61021-0367
T: 815-284-3381 DESIGN FIRM: #184-000918

DESIGNED - BKC	REVISED -		
CHECKED - PLP	REVISED -		
DRAWN - FDL	REVISED -		
CHECKED - BKC	REVISED -		

LASALLE & KENDALL COUNTY
FAS 171(CH 3–MILLINGTON RD) OVER FOX RIVER
STATION 20+00

EXISTING BEARING SHOP DRAWING FOR PIER #2
STRUCTURE NO. 047-3000

STRUCTURAL SHEET NO. 67 OF 67 SHEETS

FAS RTE.	SECTION	COUNTY	TOTAL SHEETS	SHEET NO.
171	17-00802-00-BR	LASALLE	93	79
	17-00142-00-BR	KENDALL		

WHA# 1087J17 ILLINOIS FED. AID PROJECT WZPE(199) CONTRACT NO. 87683

FILE = S:\PROJECTS\2017\1087J17_KCH\DESIGN\CAD_SHEETS\1087J17_Existing Bearings.dgn

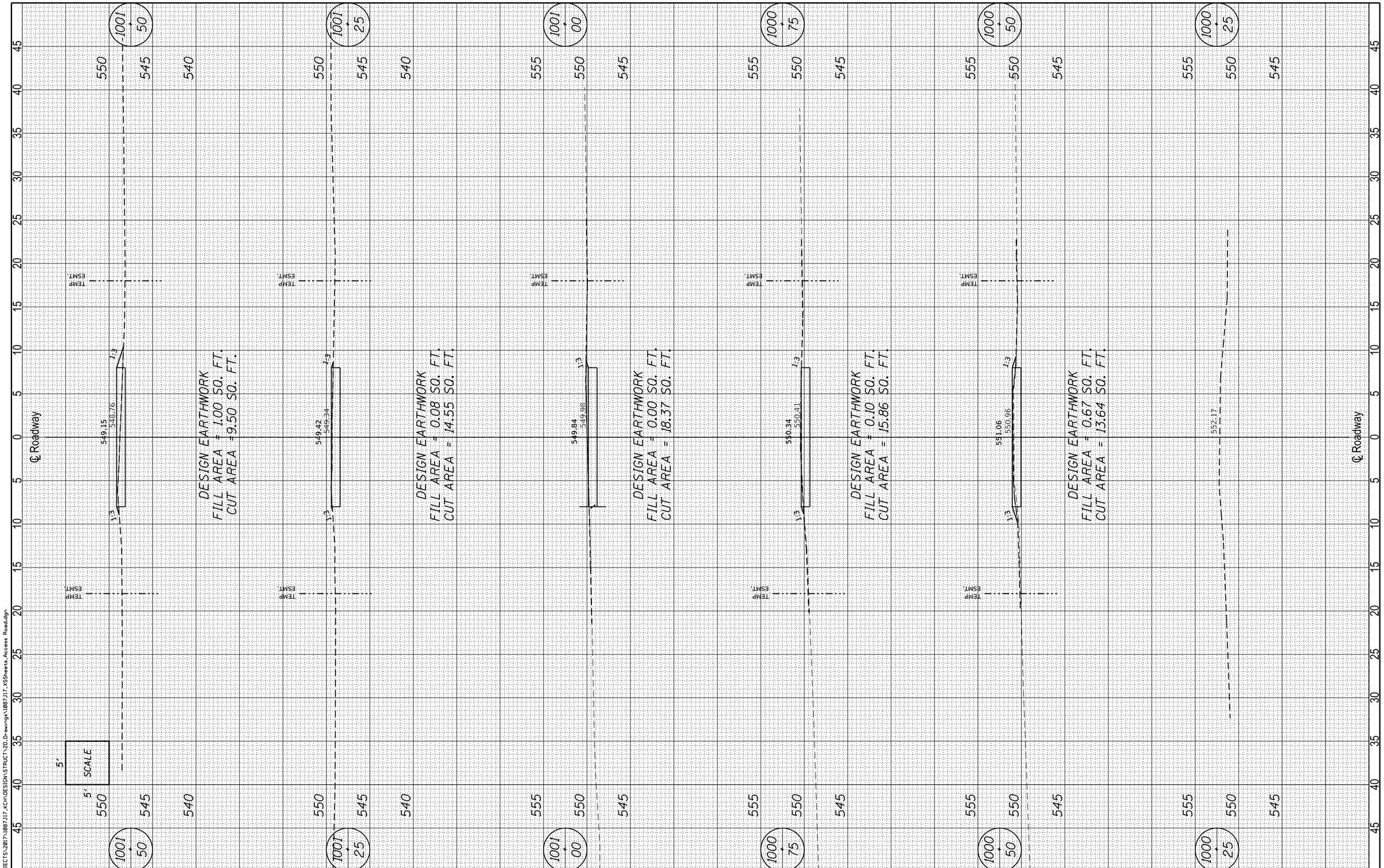

FILE = S:\PROJECTS\2017\1087J17.KCH\DESIGN\STRUCT\2D.Drawings\1087J17.XSSheets.Access Road.dgn

WILLETT HOFMANN & ASSOCIATES INC
ENGINEERING ARCHITECTURE LAND SURVEYING
809 EAST 2ND STREET, DIXON, IL 61021-0367
T: 815-284-3381 DESIGN FIRM: #184-000918

DESIGNED - MAH	REVISED -		
CHECKED - GFS	REVISED -		
DRAWN - MAH	REVISED -		
CHECKED - GFS	REVISED -		

LASALLE & KENDALL COUNTY
FAS 171(CH 3–MILLINGTON RD) OVER FOX RIVER
STATION 20+00

CROSS SECTIONS
TEMPORARY ACCESS ROAD (SOUTH)

SHEET NO. 1 OF 4 SHEETS

FAS RTE.	SECTION	COUNTY	TOTAL SHEETS	SHEET NO.
171	17-00802-00-BR	LASALLE	93	80
	17-00142-00-BR	KENDALL		

WHA# 1087J17 | ILLINOIS | FED. AID PROJECT WZPE(199) | CONTRACT NO. 87683

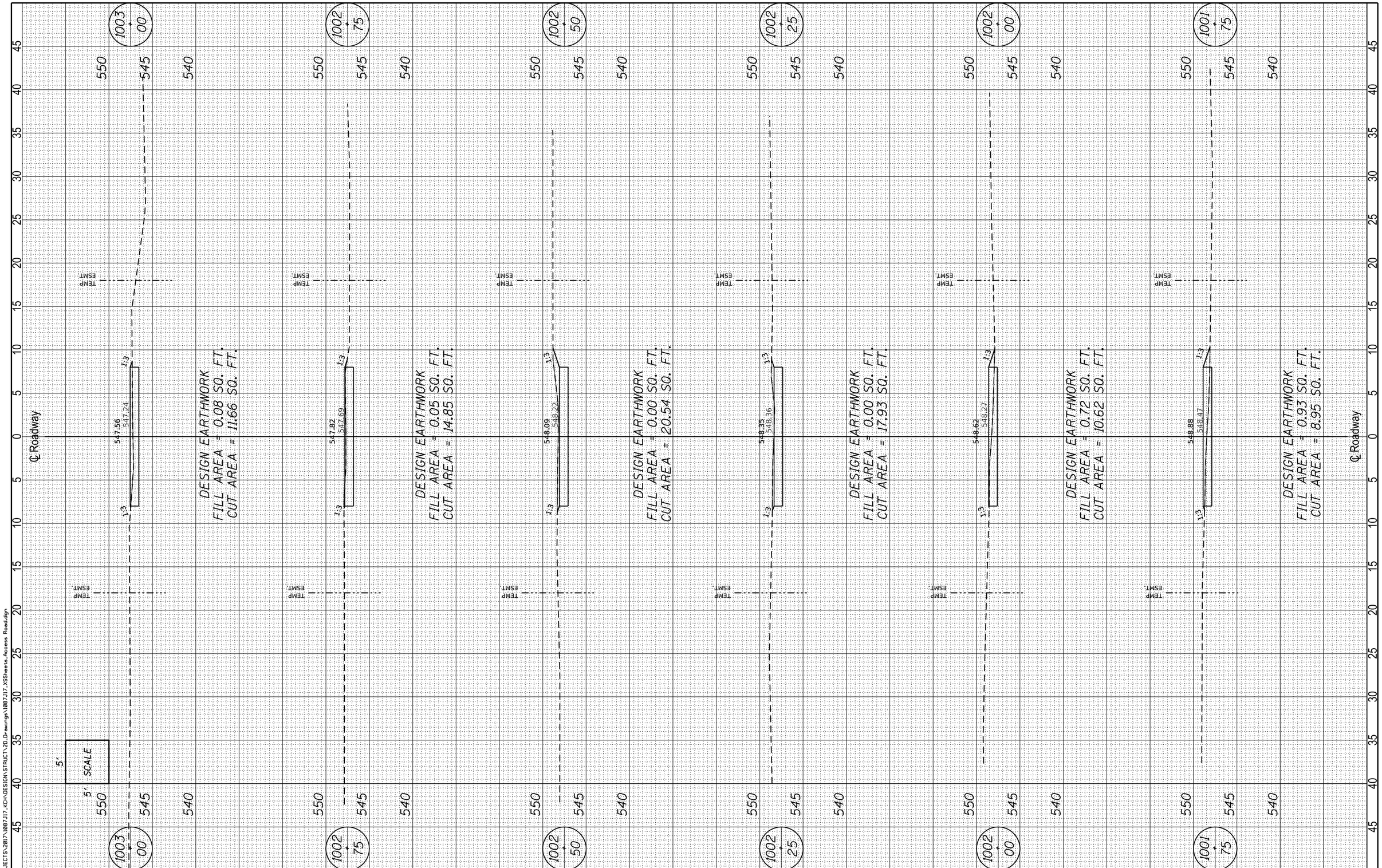

FILE = S:\PROJECTS\2017\1087J17.KCH\DESIGN\STRUCT\2D_Drawings\1087J17.XSSheets_Access Road.dgn

WILLETT HOFMANN & ASSOCIATES INC
ENGINEERING ARCHITECTURE LAND SURVEYING
809 EAST 2ND STREET, DIXON, IL 61021-0367
T: 815-284-3381 DESIGN FIRM: #184-000918

DESIGNED - MAH	REVISED -		
CHECKED - GFS	REVISED -		
DRAWN - MAH	REVISED -		
CHECKED - GFS	REVISED -		

LASALLE & KENDALL COUNTY
FAS 171(CH 3–MILLINGTON RD) OVER FOX RIVER
STATION 20+00

CROSS SECTIONS
TEMPORARY ACCESS ROAD (SOUTH)

SHEET NO. 2 OF 4 SHEETS

FAS RTE.	SECTION	COUNTY	TOTAL SHEETS	SHEET NO.
171	17-00802-00-BR	LASALLE	93	81
	17-00142-00-BR	KENDALL		

WHA* 1087J17 | ILLINOIS | FED. AID PROJECT WZPE(199) | CONTRACT NO. 87683

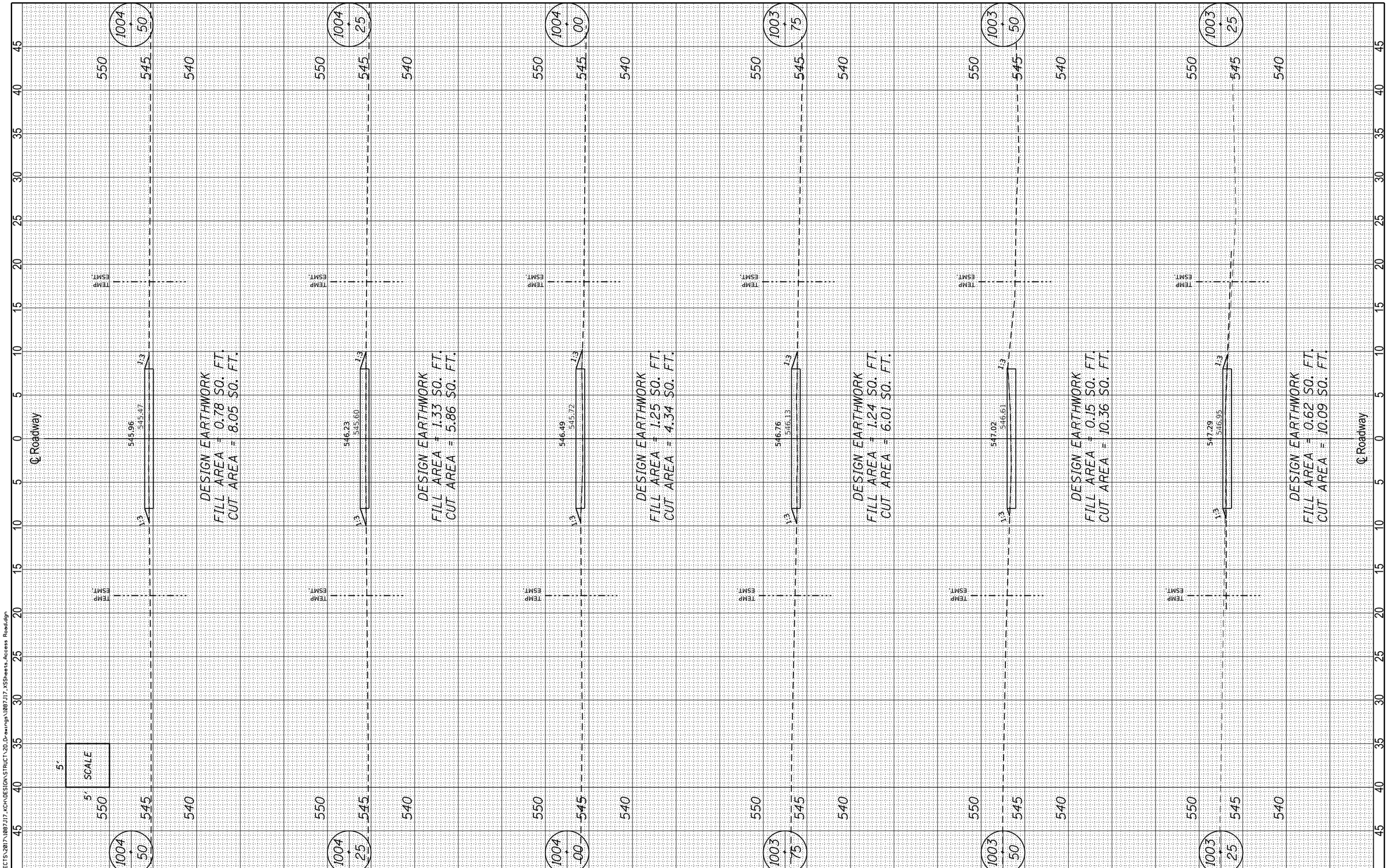

FILE = S:\PROJECTS\2017\1087J17_KCH\DESIGN\STRUCT\2D_Drawings\1087J17_XSSheets_Access Road.dgn

WILLETT HOFMANN & ASSOCIATES INC
ENGINEERING ARCHITECTURE LAND SURVEYING
809 EAST 2ND STREET, DIXON, IL 61021-0367
T: 815-284-3381 DESIGN FIRM: #184-000918

DESIGNED - MAH	REVISED -		
CHECKED - GFS	REVISED -		
DRAWN - MAH	REVISED -		
CHECKED - GFS	REVISED -		

LASALLE & KENDALL COUNTY
FAS 171(CH 3–MILLINGTON RD) OVER FOX RIVER
STATION 20+00

CROSS SECTIONS
TEMPORARY ACCESS ROAD (SOUTH)

SHEET NO. 3 OF 4 SHEETS

FAS RTE.	SECTION	COUNTY	TOTAL SHEETS	SHEET NO.
171	17-00802-00-BR	LASALLE	93	82
	17-00142-00-BR	KENDALL		

WHA# 1087J17 | ILLINOIS | FED. AID PROJECT WZPE(199) | CONTRACT NO. 87683

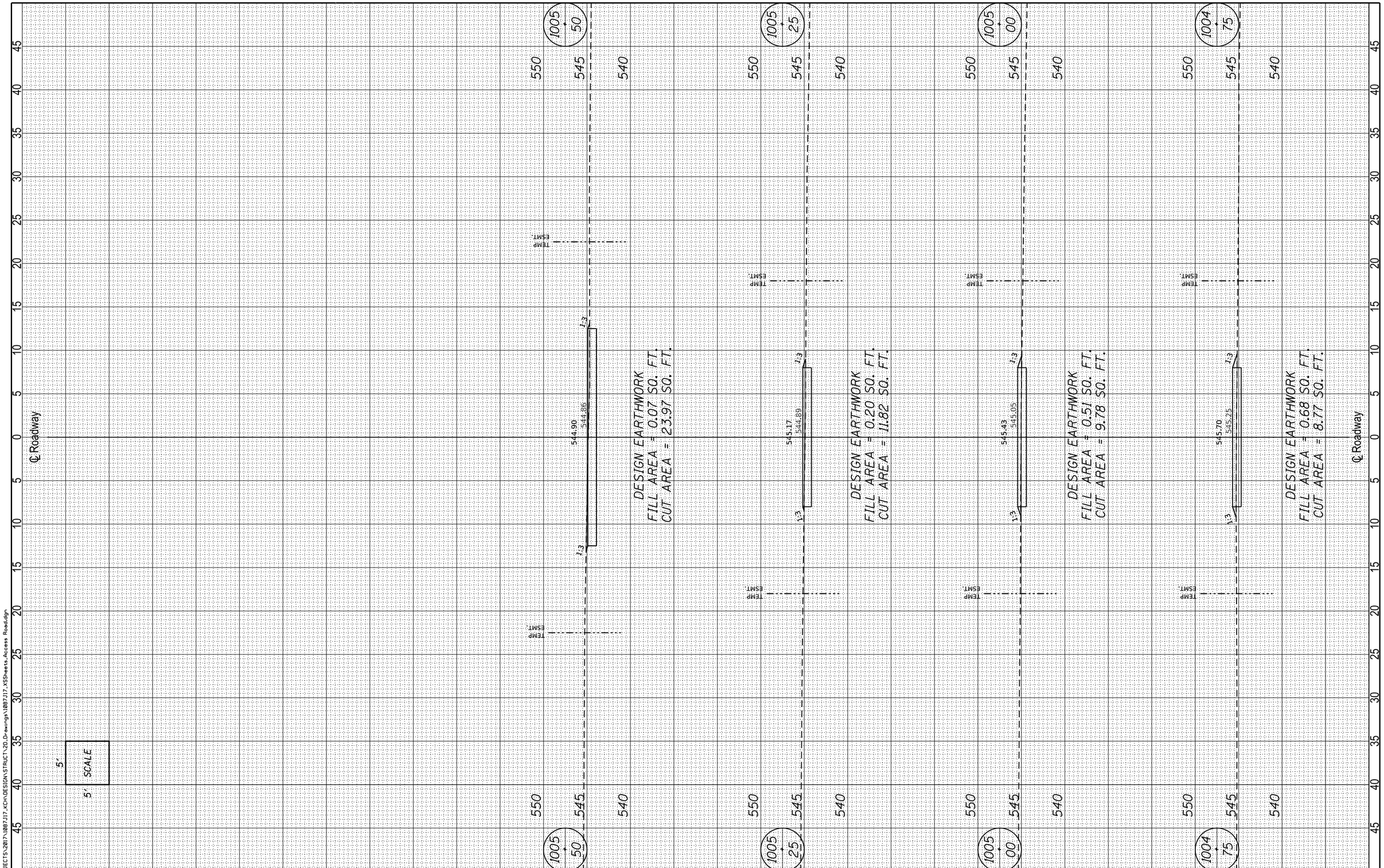

FILE = S:\PROJECTS\2017\1087J17.KCH\DESIGN\STRUCT\2D_Drawings\1087J17.XSSheets_Access Road.dgn

WILLETT HOFMANN & ASSOCIATES INC
ENGINEERING ARCHITECTURE LAND SURVEYING
809 EAST 2ND STREET, DIXON, IL 61021-0367
T: 815-284-3381 DESIGN FIRM: #184-000918

DESIGNED - MAH	REVISED -	
CHECKED - GFS	REVISED -	
DRAWN - MAH	REVISED -	
CHECKED - GFS	REVISED -	

LASALLE & KENDALL COUNTY
FAS 171(CH 3–MILLINGTON RD) OVER FOX RIVER
STATION 20+00

CROSS SECTIONS
TEMPORARY ACCESS ROAD (SOUTH)

SHEET NO. 4 OF 4 SHEETS

FAS RTE.	SECTION	COUNTY	TOTAL SHEETS	SHEET NO.
171	17-00802-00-BR	LASALLE	93	83
	17-00142-00-BR	KENDALL		

WHA* 1087J17 | ILLINOIS | FED. AID PROJECT WZPE(199) | CONTRACT NO. 87683

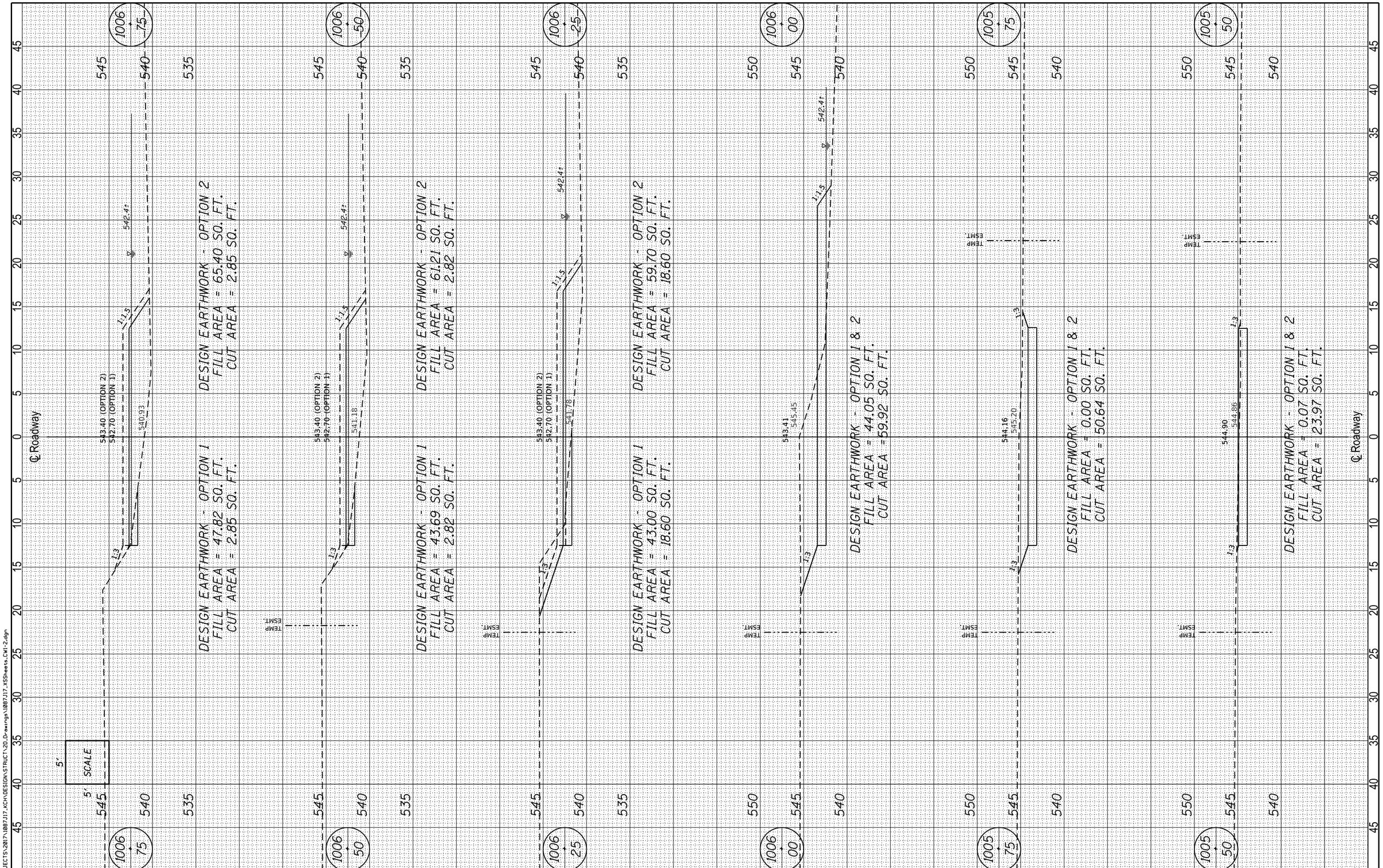

FILE = S:\PROJECTS\2017\1087J17_KCH\DESIGN\STRUCT\2D_Drawings\1087J17_XSSheets_CW1-2.dgn

WILLETT HOFMANN & ASSOCIATES INC
ENGINEERING ARCHITECTURE LAND SURVEYING
809 EAST 2ND STREET, DIXON, IL 61021-0367
T: 815-284-3381 DESIGN FIRM: #184-000918

DESIGNED - MAH	REVISED -	
CHECKED - GFS	REVISED -	
DRAWN - MAH	REVISED -	
CHECKED - GFS	REVISED -	

LASALLE & KENDALL COUNTY
FAS 171(CH 3–MILLINGTON RD) OVER FOX RIVER
STATION 20+00

CROSS SECTIONS
CAUSEWAY (OPTION 1 & OPTION 2 - SOUTH)

SHEET NO. 1 OF 5 SHEETS

FAS RTE.	SECTION	COUNTY	TOTAL SHEETS	SHEET NO.
171	17-00802-00-BR	LASALLE	93	84
	17-00142-00-BR	KENDALL		

WHA# 1087J17 | ILLINOIS | FED. AID PROJECT WZPE(199) | CONTRACT NO. 87683

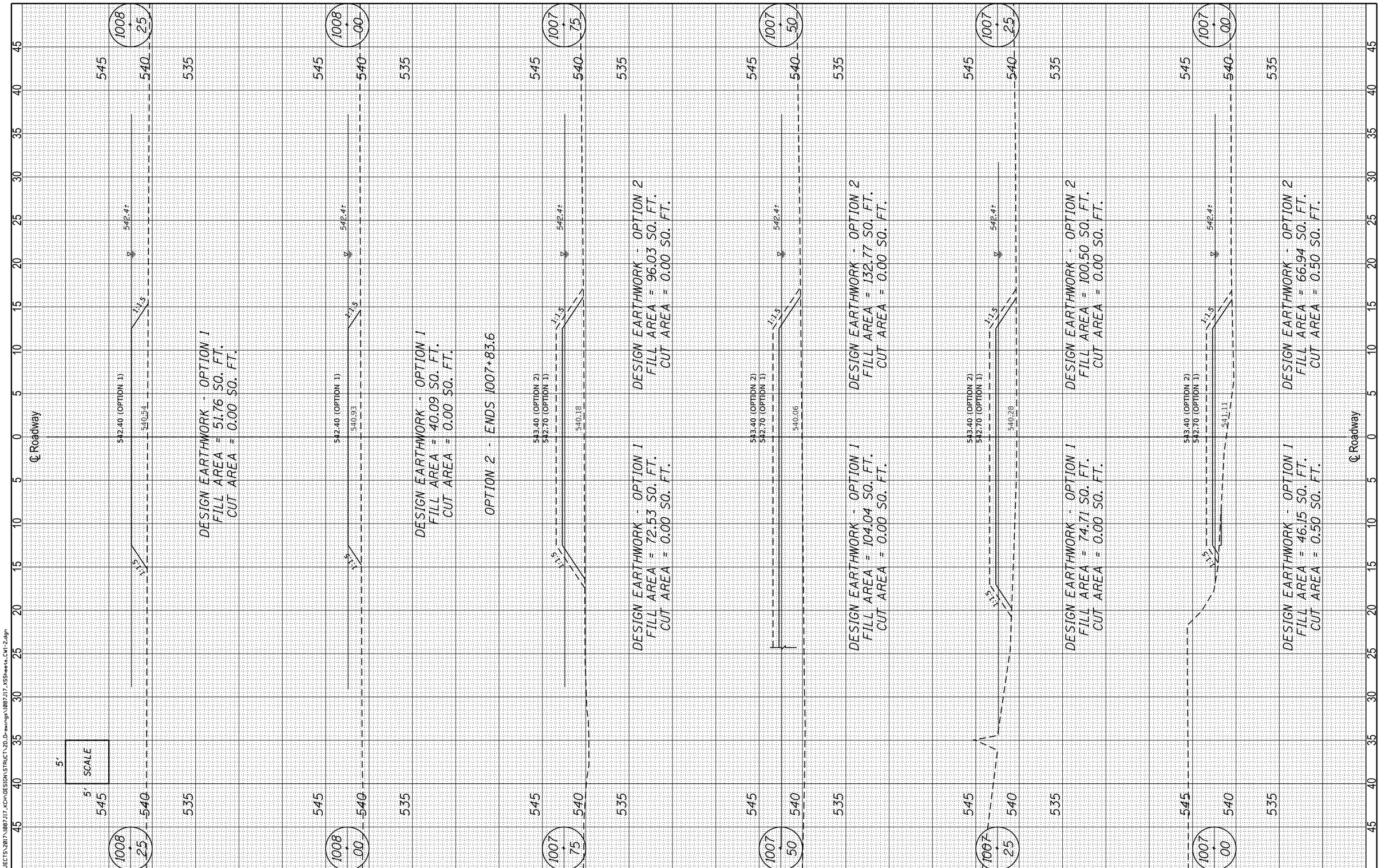

FILE = S:\PROJECTS\2017\1087J17.KCH\DESIGN\STRUCT\2D_Drawings\1087J17_XSSheets_CW1-2.dgn

WILLETT HOFMANN & ASSOCIATES INC
ENGINEERING ARCHITECTURE LAND SURVEYING
809 EAST 2ND STREET, DIXON, IL 61021-0367
T: 815-284-3381 DESIGN FIRM: #184-000918

DESIGNED - MAH	REVISED -		
CHECKED - GFS	REVISED -		
DRAWN - MAH	REVISED -		
CHECKED - GFS	REVISED -		

LASALLE & KENDALL COUNTY
FAS 171(CH 3–MILLINGTON RD) OVER FOX RIVER
STATION 20+00

CROSS SECTIONS
CAUSEWAY (OPTION 1 & OPTION 2 - SOUTH)

SHEET NO. 2 OF 5 SHEETS

FAS RTE.	SECTION	COUNTY	TOTAL SHEETS	SHEET NO.
171	17-00802-00-BR	LASALLE	93	85
	17-00142-00-BR	KENDALL		

WHA* 1087J17 | ILLINOIS | FED. AID PROJECT WZPE(199) | CONTRACT NO. 87683

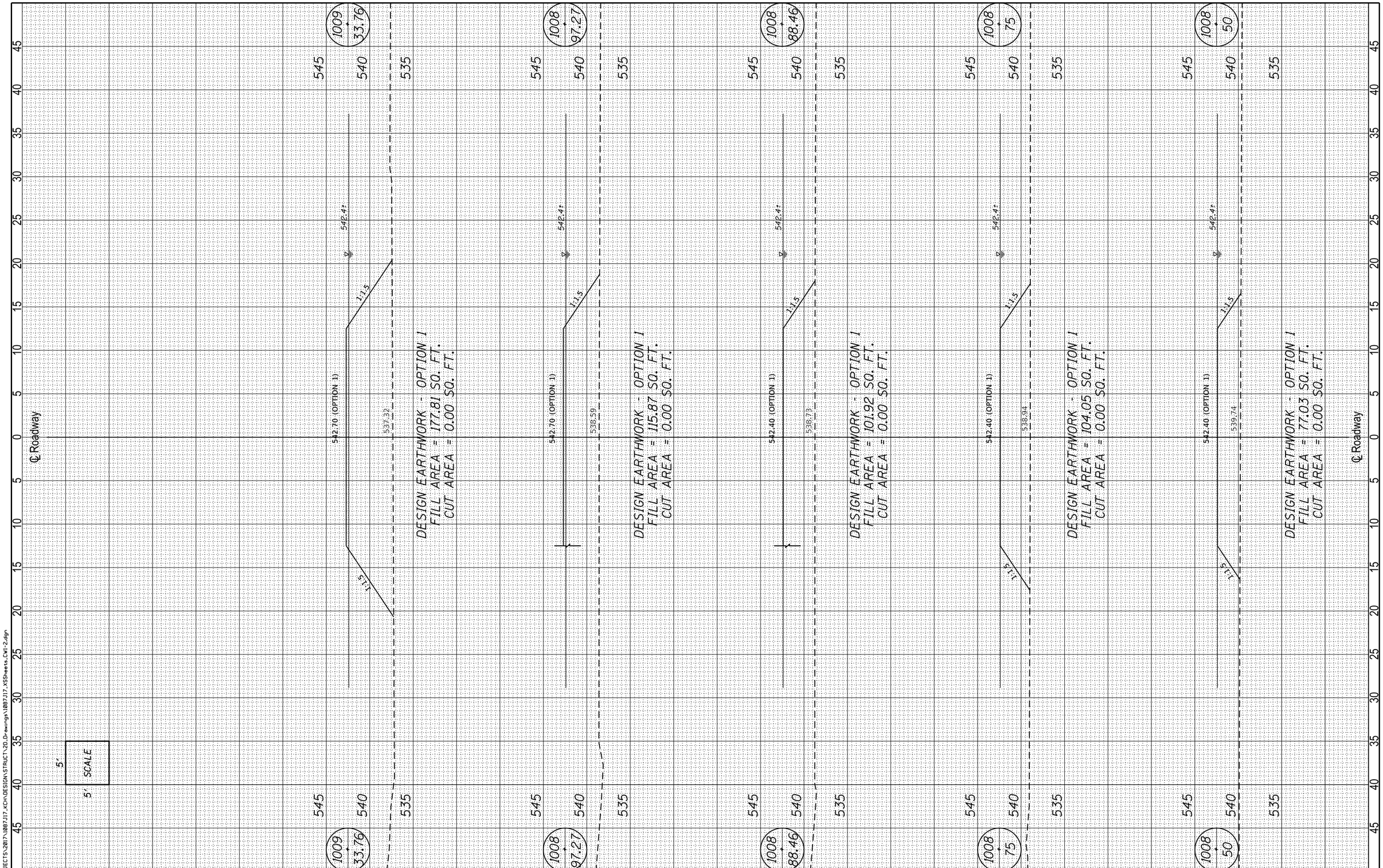

FILE = S:\PROJECTS\2017\1087J17_KCH\DESIGN\STRUCT\20.Drawings\1087J17_XSSheets_CW1-2.dgn

WILLETT HOFMANN & ASSOCIATES INC
ENGINEERING ARCHITECTURE LAND SURVEYING
809 EAST 2ND STREET, DIXON, IL 61021-0367
T: 815-284-3381 DESIGN FIRM: #184-000918

DESIGNED - MAH	REVISED -		
CHECKED - GFS	REVISED -		
DRAWN - MAH	REVISED -		
CHECKED - GFS	REVISED -		

LASALLE & KENDALL COUNTY
FAS 171(CH 3–MILLINGTON RD) OVER FOX RIVER
STATION 20+00

CROSS SECTIONS
CAUSEWAY (OPTION 1 & OPTION 2 - SOUTH)
SHEET NO. 3 OF 5 SHEETS

FAS RTE.	SECTION	COUNTY	TOTAL SHEETS	SHEET NO.
171	17-00802-00-BR	LASALLE	93	86
	17-00142-00-BR	KENDALL		

WHA# 1087J17 ILLINOIS FED. AID PROJECT WZPE(199) CONTRACT NO. 87683

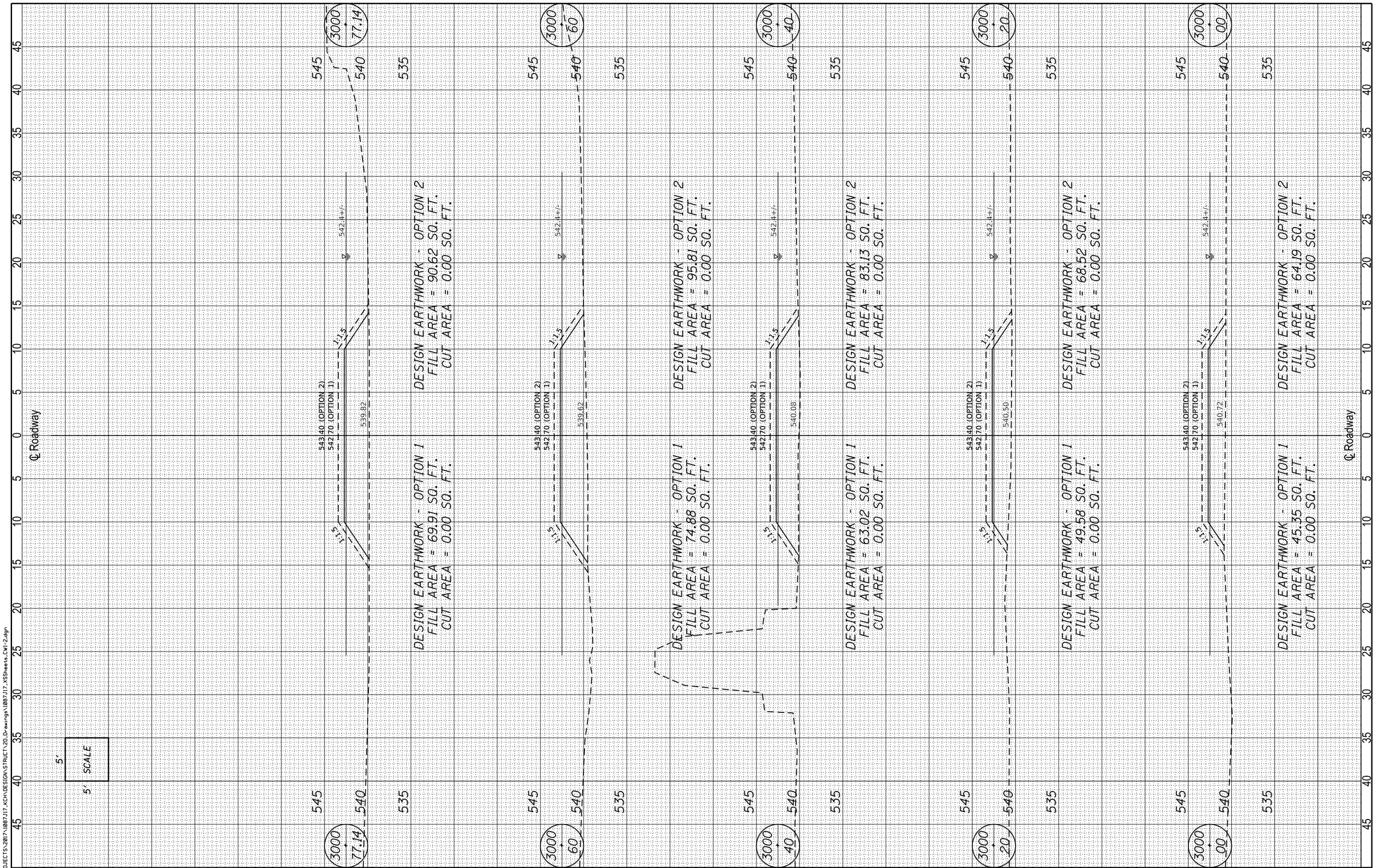

FILE = S:\PROJECTS\2017\1087J17_KCH\DESIGN\STRUCT\20.Drawings\1087J17_XSSheets_CW1-2.dgn

WILLETT HOFMANN & ASSOCIATES INC
ENGINEERING ARCHITECTURE LAND SURVEYING
809 EAST 2ND STREET, DIXON, IL 61021-0367
T: 815-284-3381 DESIGN FIRM: #184-000918

DESIGNED - MAH	REVISED -	
CHECKED - GFS	REVISED -	
DRAWN - MAH	REVISED -	
CHECKED - GFS	REVISED -	

LASALLE & KENDALL COUNTY
FAS 171(CH 3–MILLINGTON RD) OVER FOX RIVER
STATION 20+00

CROSS SECTIONS
CAUSEWAY (OPTION 1 & OPTION 2 - SOUTH)
SIDE SPUR (SOUTH PIER)
SHEET NO. 4 OF 5 SHEETS

FAS RTE.	SECTION	COUNTY	TOTAL SHEETS	SHEET NO.
171	17-00802-00-BR	LASALLE	93	87
	17-00142-00-BR	KENDALL		

WHA# 1087J17 ILLINOIS FED. AID PROJECT WZPE(199) CONTRACT NO. 87683

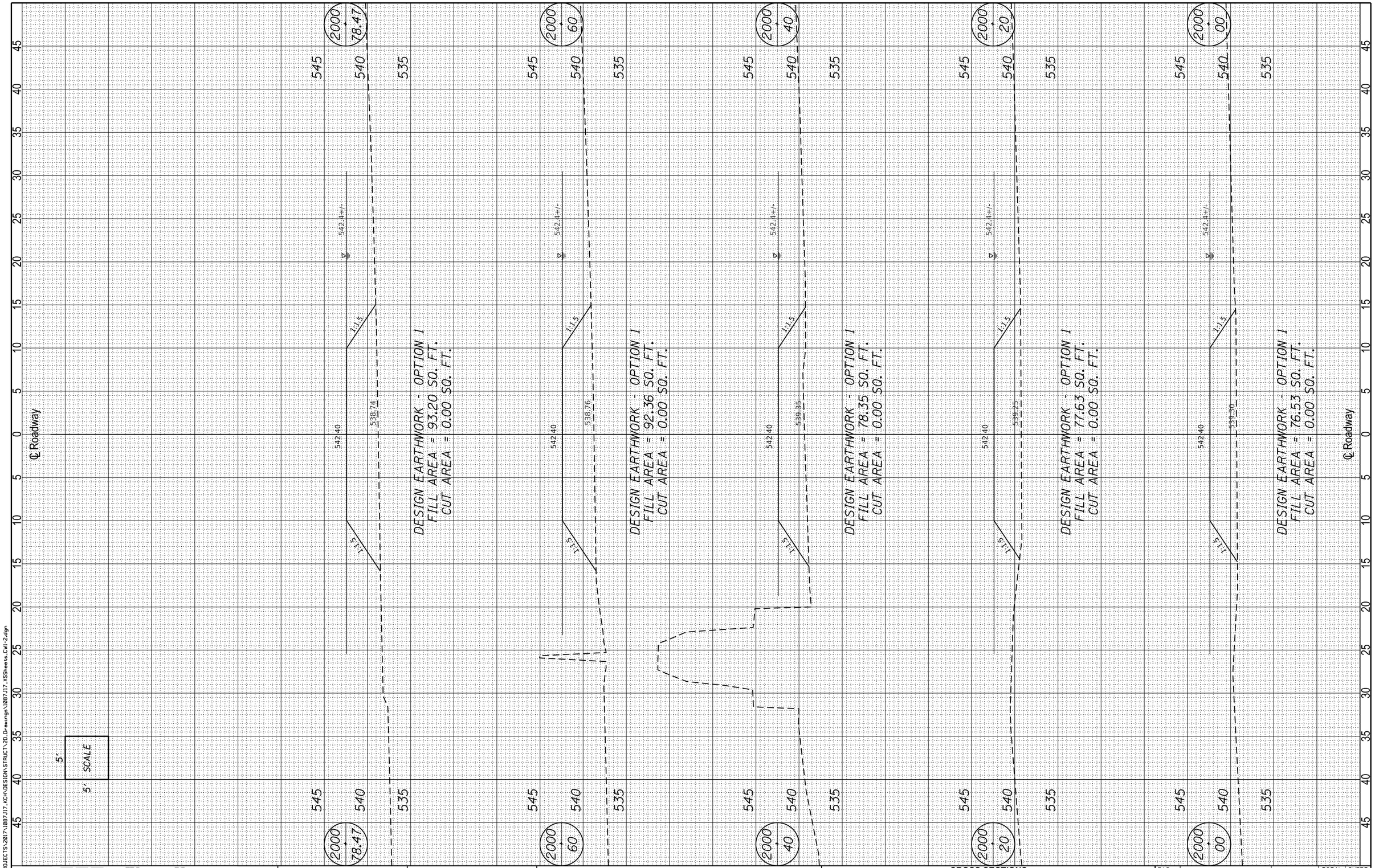

FILE = S:\PROJECTS\2017\1087J17_KCH\DESIGN\STRUCT\20.Drawings\1087J17_XSSheets_CW1-2.dgn

WILLETT HOFMANN & ASSOCIATES INC
ENGINEERING ARCHITECTURE LAND SURVEYING
809 EAST 2ND STREET, DIXON, IL 61021-0367
T: 815-284-3381 DESIGN FIRM: #184-000918

DESIGNED - MAH	REVISED -		
CHECKED - GFS	REVISED -		
DRAWN - MAH	REVISED -		
CHECKED - GFS	REVISED -		

LASALLE & KENDALL COUNTY
FAS 171(CH 3–MILLINGTON RD) OVER FOX RIVER
STATION 20+00

CROSS SECTIONS
CAUSEWAY (OPTION 1)
SIDE SPUR (NORTH PIER)
SHEET NO. 5 OF 5 SHEETS

FAS RTE.	SECTION	COUNTY	TOTAL SHEETS	SHEET NO.
171	17-00802-00-BR	LASALLE	93	88
	17-00142-00-BR	KENDALL		

WHA# 1087J17 ILLINOIS FED. AID PROJECT WZPE(199) CONTRACT NO. 87683

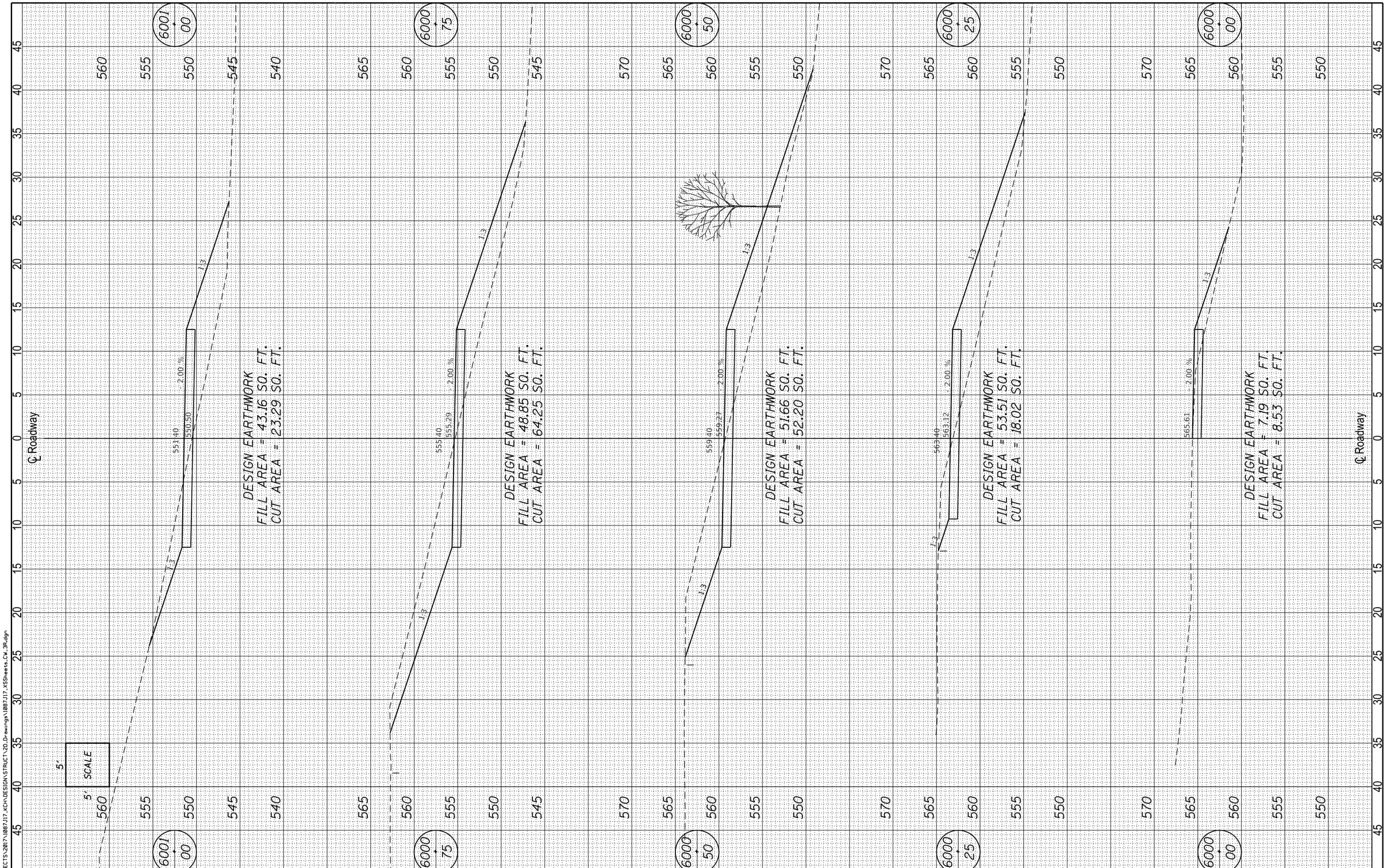

FILE = S:\PROJECTS\2017\1087J17_KCH\DESIGN\STRUCT\20_Drawings\1087J17_XSSheets_CW_3R.dgn

WILLETT HOFMANN & ASSOCIATES INC
ENGINEERING ARCHITECTURE LAND SURVEYING
809 EAST 2ND STREET, DIXON, IL 61021-0367
T: 815-284-3381 DESIGN FIRM: #184-000918

DESIGNED - MAH	REVISED -		
CHECKED - GFS	REVISED -		
DRAWN - MAH	REVISED -		
CHECKED - GFS	REVISED -		

LASALLE & KENDALL COUNTY
FAS 171(CH 3–MILLINGTON RD) OVER FOX RIVER
STATION 20+00

CROSS SECTIONS
TEMPORARY ACCESS ROAD (NORTH)

SHEET NO. 1 OF 2 SHEETS

FAS RTE.	SECTION	COUNTY	TOTAL SHEETS	SHEET NO.
171	17-00802-00-BR	LASALLE	93	89
	17-00142-00-BR	KENDALL		

WHA# 1087J17 | ILLINOIS | FED. AID PROJECT WZPE(199) | CONTRACT NO. 87683

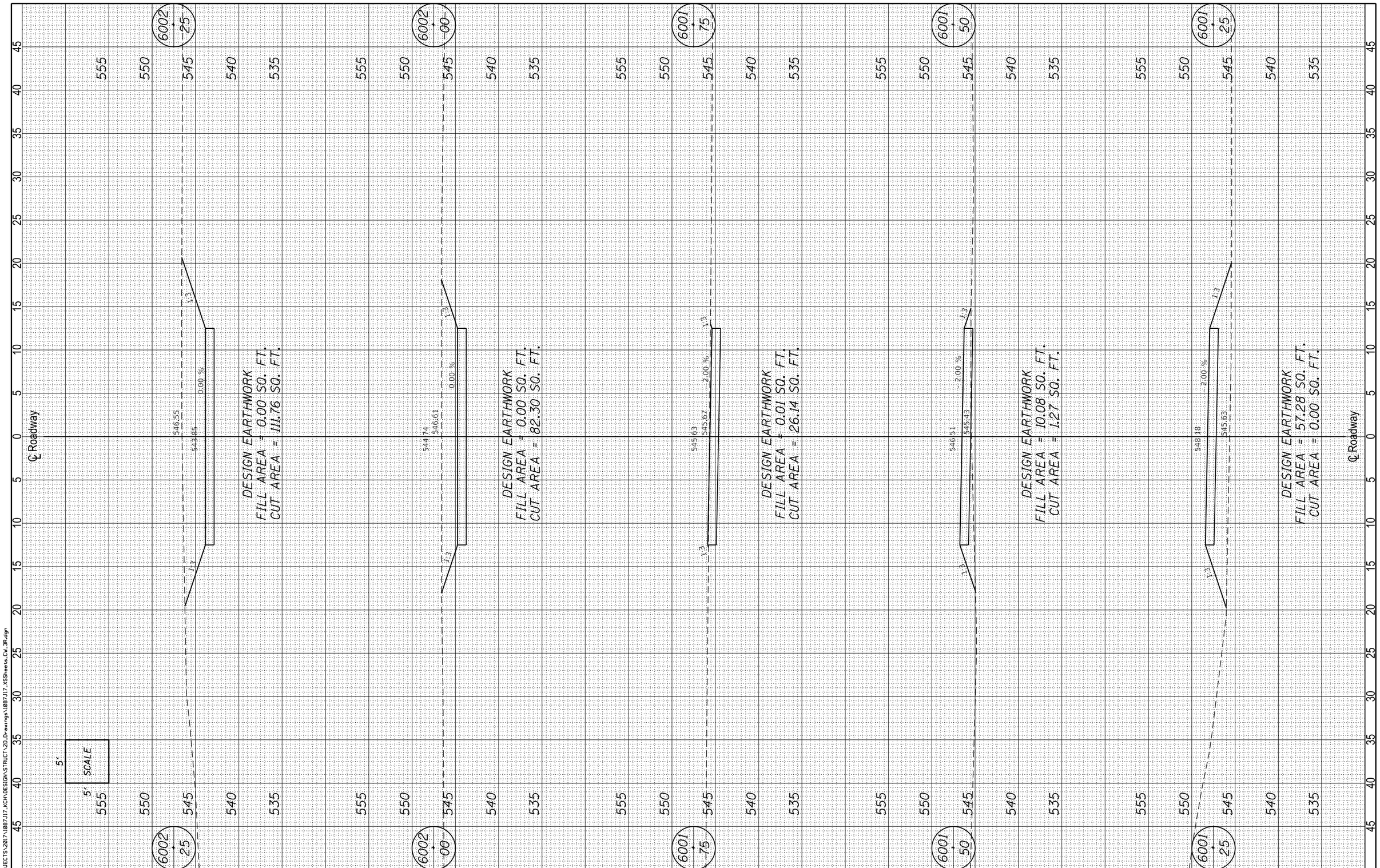

FILE = S:\PROJECTS\2017\1087J17_KCH\DESIGN\STRUCT\20_Drawings\1087J17_XSSheets_CW_3R.dgn

WILLETT HOFMANN & ASSOCIATES INC
ENGINEERING ARCHITECTURE LAND SURVEYING
809 EAST 2ND STREET, DIXON, IL 61021-0367
T: 815-284-3381 DESIGN FIRM: #184-000918

DESIGNED - MAH	REVISED -	
CHECKED - GFS	REVISED -	
DRAWN - MAH	REVISED -	
CHECKED - GFS	REVISED -	

LASALLE & KENDALL COUNTY
FAS 171(CH 3–MILLINGTON RD) OVER FOX RIVER
STATION 20+00

CROSS SECTIONS
TEMPORARY ACCESS ROAD (NORTH)

SHEET NO. 2 OF 2 SHEETS

FAS RTE.	SECTION	COUNTY	TOTAL SHEETS	SHEET NO.
171	17-00802-00-BR	LASALLE	93	90
	17-00142-00-BR	KENDALL		

WHA# 1087J17 | ILLINOIS | FED. AID PROJECT WZPE(199) | CONTRACT NO. 87683

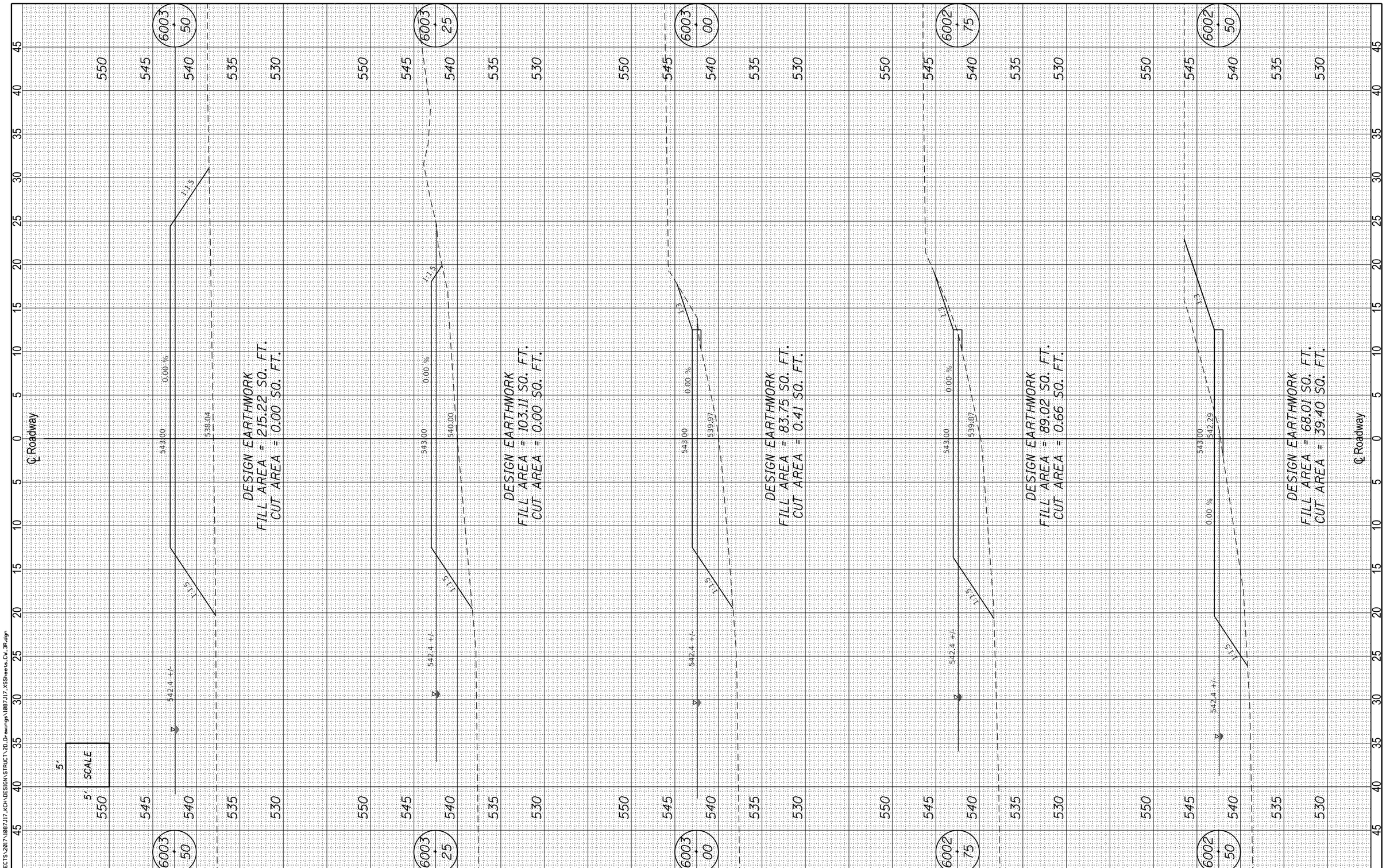

FILE = S:\PROJECTS\2017\1087J17_KCH\DESIGN\STRUCT\20.Drawings\1087J17_XSSheets_CW_3R.dgn

WILLETT HOFMANN & ASSOCIATES INC
ENGINEERING ARCHITECTURE LAND SURVEYING
809 EAST 2ND STREET, DIXON, IL 61021-0367
T: 815-284-3381 DESIGN FIRM: #184-000918

DESIGNED - MAH	REVISED -		
CHECKED - GFS	REVISED -		
DRAWN - MAH	REVISED -		
CHECKED - GFS	REVISED -		

LASALLE & KENDALL COUNTY
FAS 171(CH 3–MILLINGTON RD) OVER FOX RIVER
STATION 20+00

CROSS SECTIONS
CAUSEWAY (OPTION 2 - NORTH)

SHEET NO. 1 OF 3 SHEETS

FAS RTE.	SECTION	COUNTY	TOTAL SHEETS	SHEET NO.
171	17-00802-00-BR	LASALLE	93	91
	17-00142-00-BR	KENDALL		

WHA# 1087J17 | ILLINOIS | FED. AID PROJECT WZPE(199) | CONTRACT NO. 87683

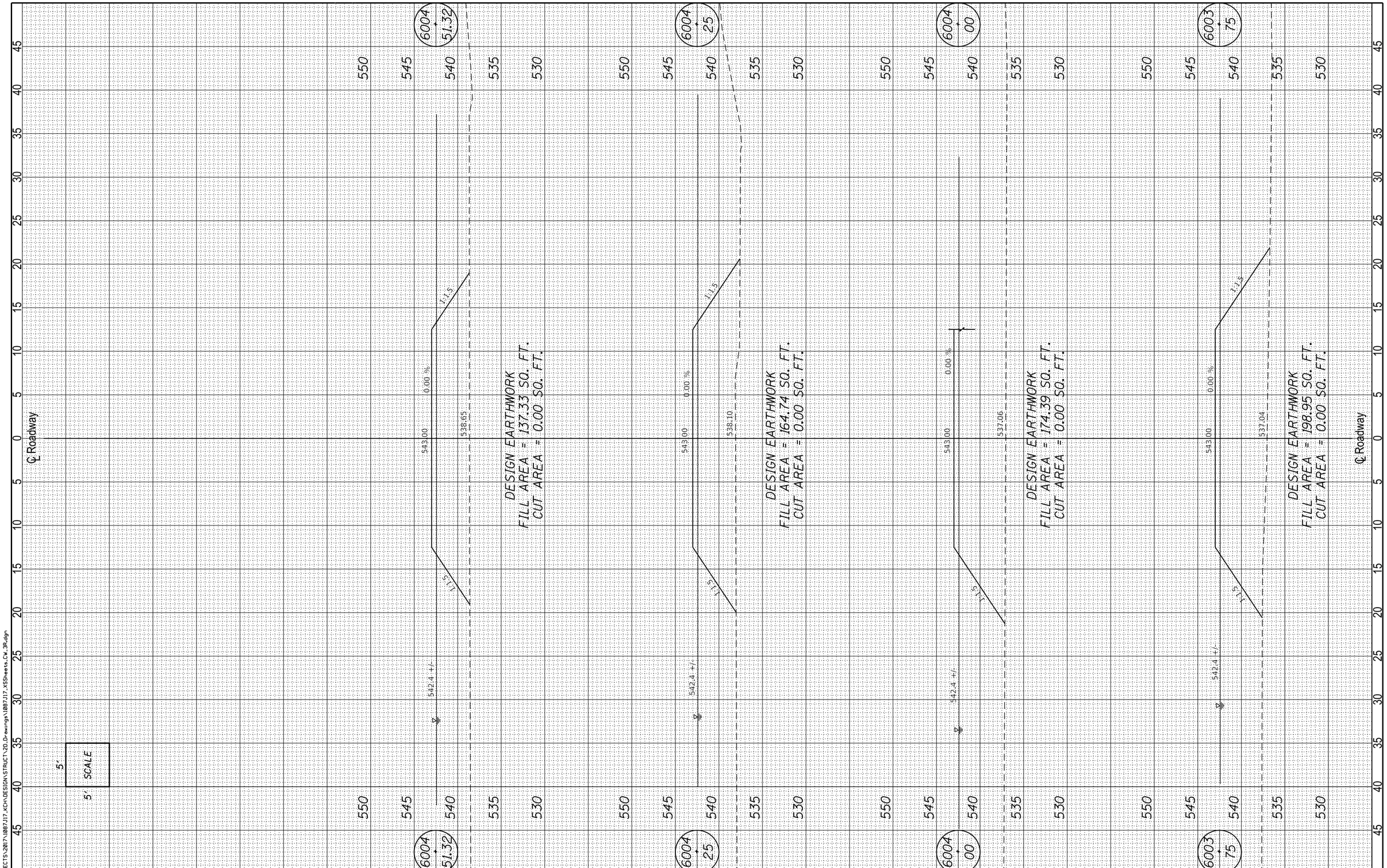

FILE = S:\PROJECTS\2017\1087J17_KCH\DESIGN\STRUCT\20_Drawings\1087J17_XSSheets_CW_3R.dgn

WILLETT HOFMANN & ASSOCIATES INC
ENGINEERING ARCHITECTURE LAND SURVEYING
809 EAST 2ND STREET, DIXON, IL 61021-0367
T: 815-284-3381 DESIGN FIRM: #184-000918

DESIGNED - MAH	REVISED -	
CHECKED - GFS	REVISED -	
DRAWN - MAH	REVISED -	
CHECKED - GFS	REVISED -	

LASALLE & KENDALL COUNTY
FAS 171(CH 3–MILLINGTON RD) OVER FOX RIVER
STATION 20+00

CROSS SECTIONS
CAUSEWAY (OPTION 2 - NORTH)

SHEET NO. 2 OF 3 SHEETS

FAS RTE.	SECTION	COUNTY	TOTAL SHEETS	SHEET NO.
171	17-00802-00-BR	LASALLE	93	92
	17-00142-00-BR	KENDALL		

WHA* 1087J17 ILLINOIS FED. AID PROJECT WZPE(199) CONTRACT NO. 87683

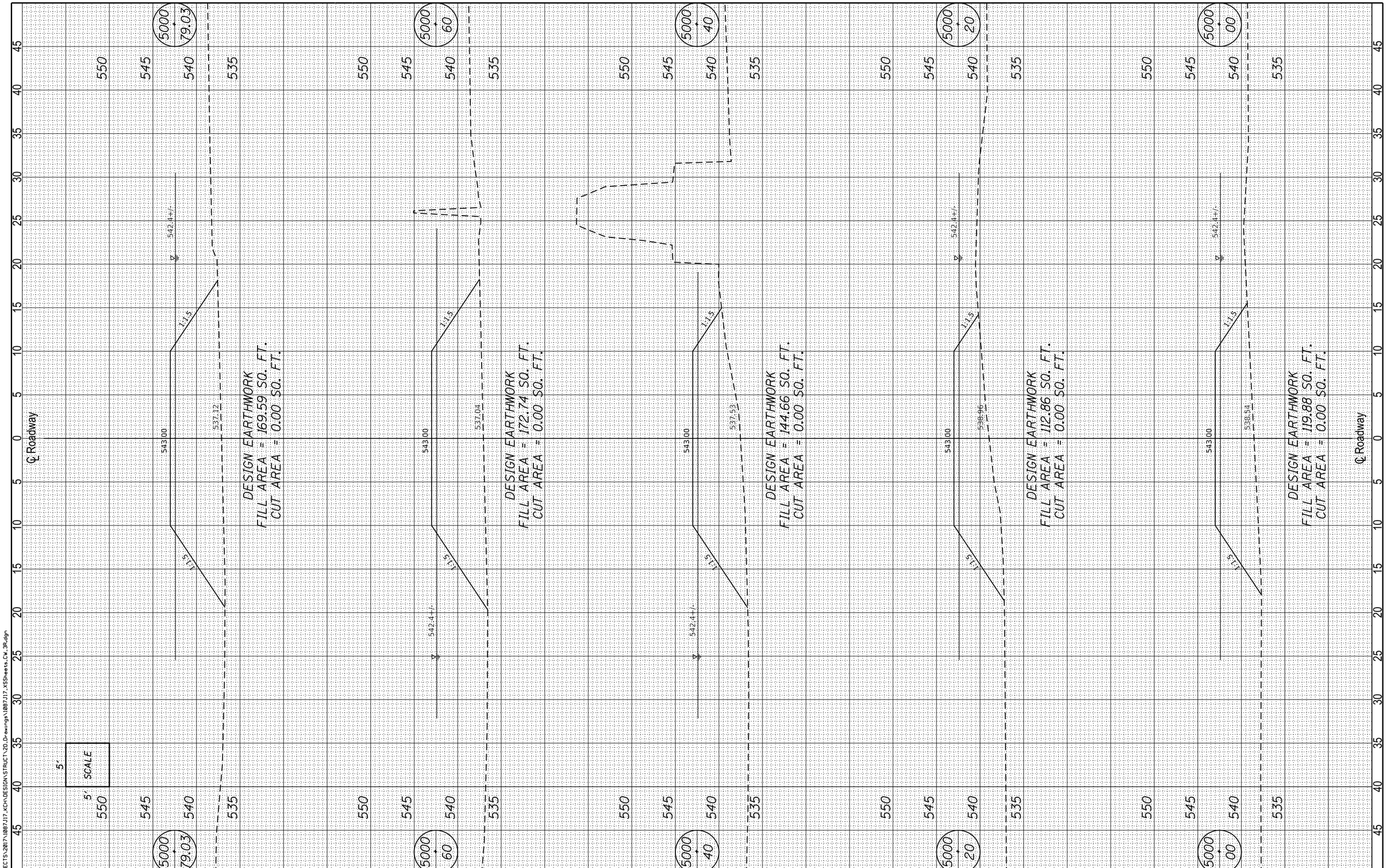

WILLETT HOFMANN & ASSOCIATES INC
ENGINEERING ARCHITECTURE LAND SURVEYING
809 EAST 2ND STREET, DIXON, IL 61021-0367
T: 815-284-3381 DESIGN FIRM: #184-000918

DESIGNED - MAH	REVISED -		
CHECKED - GFS	REVISED -		
DRAWN - MAH	REVISED -		
CHECKED - GFS	REVISED -		

LASALLE & KENDALL COUNTY
FAS 171(CH 3–MILLINGTON RD) OVER FOX RIVER
STATION 20+00

CROSS SECTIONS
CAUSEWAY (OPTION 2 - NORTH)
SIDE SPUR (NORTH PIER)
SHEET NO. 3 OF 3 SHEETS

FAS RTE.	SECTION	COUNTY	TOTAL SHEETS	SHEET NO.
171	17-00802-00-BR	LASALLE	93	93
	17-00142-00-BR	KENDALL		

WHA# 1087J17 | ILLINOIS | FED. AID PROJECT WZPE(199) | CONTRACT NO. 87683

FILE = S:\PROJECTS\2017\1087J17_KGH\DESIGN\STRUCT\20_Drawings\1087J17_XSSheets_CW_3R.dgn