FAP	SECTION	COUNTY	TOTAL SHEETS	SHEET NO.
313	94(16,16-1,17)RS,48(17,18)RS	Warren/Knox	118	1
RTE US 34/IL 110	ILLINOIS	CONTRACT NO. 68339		

03-09-2018 LETTING ITEM 031

INDEX OF SHEETS

HIGHWAY STANDARDS

442001–04	642001–02	701422–10	821101–02
442201–03	667101–02	701901–07	830021–02
601001–05	701006–05	720011–01	838001–01
604106–01	701011–04	728001–01	
630001–12	701101–05	729001–01	
631011–10	701106–02	780001–05	
631026–06	701400–09	781001–04	
631031–15	701401–11		

DESIGN DESIGNATION:
Class I Route
2015 ADT = 9650
MU = 11.48%
SU = 6.15%
Other Principal Arterial

CADD STANDARDS

604101–D4	630101–D4
604201–D4	635001–D4
630011–D4	780001–D4

1" = 100' (0, 100', 200', 300')
1" = 10' (0, 10', 20', 30')
1" = 50' (0, 50', 100')
1" = 40' (0, 50', 100')
1" = 30' (0, 50', 100')
1" = 20' (0, 50', 100')

FULL SIZE PLANS HAVE BEEN PREPARED USING STANDARD ENGINEERING SCALES. REDUCED SIZED PLANS WILL NOT CONFORM TO STANDARD SCALES. IN MAKING MEASUREMENTS ON REDUCED PLANS, THE ABOVE SCALES MAY BE USED.

J.U.L.I.E.
JOINT UTILITY LOCATION INFORMATION FOR EXCAVATION
1–800–892–0123
OR 811

PROJECT ENGINEER: Christopher Maushard 309–671–3453
PROJECT MANAGER: George Elias 309–671–3467
Michael Hudelson 309–671–3466

CONTRACT NO. 68339
CATALOG NO. 032725–01D

STATE OF ILLINOIS
DEPARTMENT OF TRANSPORTATION
DIVISION OF HIGHWAYS

PROPOSED HIGHWAY PLANS

ROUTE US 34 /IL 110 FAP 313
SECTION 94(16, 16–1, 17)RS, 48(17, 18)RS
PROJECT NHPP–QBOZ(237)
TYPE of IMPROVEMENT: Resurfacing & Bridge Rehabilitation
COUNTY WARREN /KNOX

C–94–035–03

R 1E

T 11N

JOB ENDS
STA. 363+90

JOB BEGINS
STA. 542+00

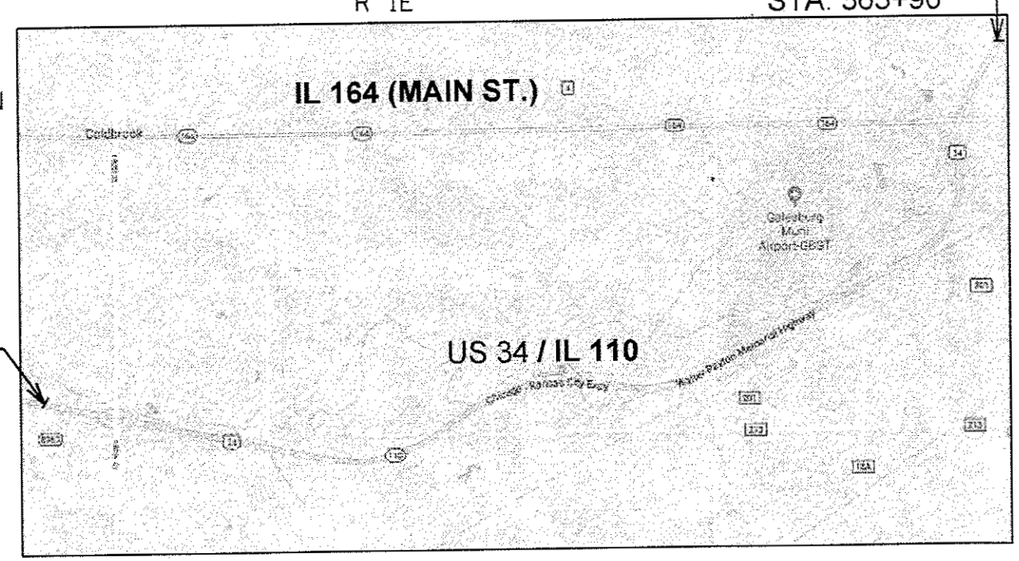

DESCRIPTION OF WORK:
This project consists of an HMA overlay on US 34/IL 110 Mainline & Ramps Variable depth shoulder removal & replacement, Center Joint Filling, Concrete Patching and Pavement Cleaning, New Underdrain Installation and Bridge Rehabilitation.

GROSS LENGTH = 38544 FT. = 7.30 MILE
NET LENGTH = 38544 FT. = 7.30 MILE

D–94–033–03

LOCATION OF SECTION INDICATED THUS: –

Sta. Equa. 712 + 50 (BK) = 710 + 00 (AH)
EB Sta. Equa. 898 + 97.33 (BK) = 330 + 50 (AH)
WB Sta. Equa. 897 + 98.26 (BK) = 330 + 50 (AH)
Sta. Equa. 343 + 65 (BK) = 344 + 67 (AH)

STATE OF ILLINOIS
DEPARTMENT OF TRANSPORTATION
DIVISION OF HIGHWAYS

SUBMITTED Dec 14 20 2017
Kensil A Garnett (KSD)
REGION THREE ENGINEER

Feb 2 20 18
acting ENGINEER OF DESIGN AND ENVIRONMENT

Feb 2 20 18
DIRECTOR OF PROGRAM DEVELOPMENT

PRINTED BY THE AUTHORITY OF THE STATE OF ILLINOIS

REV

COMMITMENTS

Commitments are not to be altered without the written approval of all parties to which the commitment was made. There were no commitment.

ENVIRONMENTAL REVIEWS

Prior to the use of any proposed borrow areas, use areas (temporary access roads, detours, run–arounds, etc.) and/or waste areas, the Contractor shall file the required environmental resource request surveys according to Section 107.22 of the Standard Specifications. These surveys are required in order for the Department to conduct cultural and biological resource surveys for the proposed site.

Prior to any waste materials being removed from the construction site the required environmental resource surveys will need to be obtained and filed by the Contractor. Excess waste products removed from the construction site shall be disposed of as required in Section 202.03 of the Standard Specifications.

Any protruding metal bars shall be removed prior to the disposal of broken concrete at approved disposal sites.

The required environmental resource documentation shall include the following:

* BDE Form 2289 (Environmental Survey Request)
* BDE Form 2290 (Waste/Use Area Review)
* A location map showing the size limits and location of the use area
* Color photographs depicting the use area
* Borrow Area Entry Agreement form–D4 PI0101

Please note that a minimum of four weeks shall be allowed for the District to obtain the required environmental clearances and six weeks for the required borrow site environmental clearances.

PAVEMENT STATIONING NUMBERS & PLACEMENT

The Contractor shall provide labor and materials required to imprint pavement station numbers in the finished surface of the pavement and/or overlay. The numbers shall be approximately 3/4 inch (20mm) wide, 5 inches (125 mm) high and 5/8 inch (15 mm) deep.

The pavement station numbers shall be installed as specified herein:

Interval – 200 feet (English stationing) or 100 meters (metric stationing)

Bottom of Numbers – 6 inches (150 mm) from the inside edge of the pavement marking

Location:
* 2,3, & 5 Lane Pavements – right edge of pavement in direction of increasing stations
* Multi–Lane Divided Roadways – outside edge of pavement in both directions
* Ramps – along baseline edge of pavement

Position – stations shall be placed so they can be read from the adjacent shoulder

Format – English (Metric) pavement stations shall use this format "XXX (XX+X00)" where X represents the pavement station

This work will not be paid for separately, but will be considered included in the cost of the associated pavement and/or overlay pay items.

MINIMUM VERTICAL CLEARANCE

The Contractor shall verify the existing structure vertical clearance prior to placing bituminous overlay under any structure. A minimum (16') vertical clearance shall be maintained under all structures.

HMA MIX DESIGN

The following mixture requirements are applicable for this project:

Mixture Use(s):	Polymer Surface Course 1 3/4"	Polymer Binder Course 2"	Polymer Level Binder 1" (Ramps)	Shoulder Repair (if needed for tile operation)	Shoulders (Lower Lifts) 4.5"	Shoulders (Surface Lift) 1.75"	Leveling Binder (Pavement Cleaning)
AC/PG:	SBS or SBR 76-28	SBS or SBR 76-28	SBS or SBR 76-22	PG 64-22	PG 64-22	PG 64-22	PG 64-22
Design Air Voids:	4.0% @ N=70	4.0% @ N=70	4.0% @ N=50	4.0% @ N=50	4.0% @ N=50	4.0% @ N=50	4.0% @ N=50
Mixture Composition: (Mixture Gradation)	IL 9.5	IL 9.5	IL 4.75	IL 19.0	IL 9.5	IL 9.5FG	IL 4.75
Friction Aggregate:	Mix D (Dolomite Only)	N.A.	N.A.	N.A.	Mix C	Mix C	N.A.
Quality Management Program:	PFP	PFP	QCQA	QCQA	QCQA	QCQA	QCQA

Note: 1) Individual lift thickness of each mix type will be no less than 3 times nominal maximum aggregate size and no more thn 6 times nominal maximum aggregate size, unless otherwise approved by the Engineer.
2) For design purposes, mixture weight for all mixes is determined to be 112.0 lb/s.y./in., unless otherwise noted.
3) Sublot sizes for PFP and QCP mixes will be 1000 tons, unless otherwise agreed to by the Engineer and the paving cotractor.

POLYMERIZED BITUMINOUS MATERIALS (TACK COAT) RATES

Surface Type	Residual Rate
Milled (HMA or PCC)	0.08 lb /sq ft
Existing Pavement	0.04 lb /sq ft
Fog Coat (between lifts)	0.04 lb /sq ft

BUTT JOINT CUTTING TIME RESTRICTION

Butt joints shall not be milled more than three (3) days prior to placement of the HMA surface course.

CROSSING EXISTING STRUCTURES WITH EQUIPMENT

The following structures, SN 094–0028, 048–0073. 048–0074 SN 048–0076, 048–0077 may be crossed with UNLOADED MTD.
Any structures not listed above shall be verified by the resident prior to beginning work.

ORDERING LENGTH CONFIRMATION – DRAINAGE ITEMS

The Contractor shall consult with the Engineer in regard to the exact length of the box/pipe culverts, storm sewers, and/or pipe drains required prior to ordering these items.

JOB SPECIFIC NOTES:

I. All specified pavement cleaning within each segment of the project will be approved by the R.E. prior to priming and filling with HMA IL 4.75 Level Binder N50 (PG 64–22) prior to Mainline Resurfacing.

II. This work will be paid for as FORCE ACCOUNT per Article109.04 of the Standard Specification.

Mainline pavement shall be paved 24 feet wide continuously or with two (2) paving machines running in tandem. There shall be no joint in the centerline of the pavement.

PAVEMENT CLEANING (PUNCH OUT)
All work will be constructed per Standard Specification Book. Article 406.04 to 406.06(e).
Asphalt application rate will be as specified in the following table:
Hot Mix Asphalt Binder & Surface Course Art. 406.05

Type of surface to be Tacked /Residual Asphalt Rate [lb/sq.ft, kg/sq.m]

Milled HMA, Aged Non–Milled HMA, Milled Concrete, Non–Milled Concrete & Tined Concrete 0.08 = (0.390)
HMA Lifts, IL–4.75 Fog Coating 0.04 = (0.195)

Prime Coat for Aggregate Bases.
The prime coat shall be applied uniformly and at a rate that will provide a residual asphalt rate on the prepared surface of 0.25 = 1.21 & the Fog Coat between lifts will be 0.04 = 0.195

All Bridge Rehabilitation work will be done Simultaneously with the Resurfacing Operation. Bridge work is not factored into the estimate of time.

The work effort between these two (2) pay items:
Pipe Underdrains, Type 3 &
Shoulder Removal & Replacement, (Special)
are closely related in the field. Please, take this into consideration with your bidding.

CODE NO.	ITEM	UNIT	TOTAL QUANTITY	CONSTRUCTION CODE						
									048-0073	048-0076
				ROADWAY	ROADWAY	MOWING	MOWING	LIGHTING	048-0074	048-0077
				WARREN CO.	KNOX CO.	WARREN CO.	KNOX CO.	WARREN CO.	KNOX CO.	KNOX CO.
				0006	0006	0006	0006	0021	0047	0047
				80% FD 20% ST	80% FD 20% ST	100% STATE	100% STATE	80% FD 20% ST	80% FD 20% ST	80% FD 20% ST
20200500	EARTH EXCAVATION (WIDENING)	CU YD	400	300	100					
21400100	GRADING AND SHAPING DITCHES	FOOT	220	220						
25000750	MOWING	ACRE	93			57	36			
28100825	STONE DUMPED RIPRAP, CLASS B3	TON	450	320	130					
28200200	FILTER FABRIC	SQ YD	1498	1066	432					
31100300	SUB-BASE GRANULAR MATERIAL, TYPE A 4"	SQ YD	5218	4151	1067					
40600285	POLYMERIZED BITUMINOUS MATERIALS (PRIME COAT)	POUND	11741	9341	2400					
40600295	POLYMERIZED BITUMINOUS MATERIALS (TACK COAT)	POUND	429324	268293	161031					
40600827	POLYMERIZED LEVELING BINDER (MACHINE METHOD), IL-4.75, N50	TON	666	388	278					
40600982	HOT - MIX ASPHALT SURFACE REMOVAL - BUTT JOINT	SQ YD	4467	778	3689					
40600985	PORTLAND CEMENT CONCRETE SURFACE REMOVAL - BUTT JOINT	SQ YD	4715	818	3897					
40600990	TEMPORARY RAMP	SQ YD	735	205	530					
40603208	POLYMERIZED HOT-MIX ASPHALT BINDER COURSE, IL-9.5, N70	TON	21585	14947	6638					
40603540	POLYMERIZED HOT - MIX ASPHALT SURFACE COURSE, MIX "D", N70	TON	21950	13783	8167					

CODE NO.	ITEM	UNIT	TOTAL QUANTITY	CONSTRUCTION CODE						
				ROADWAY	ROADWAY	MOWING	MOWING	LIGHTING	048-0073 048-0074	048-0076 048-0077
				WARREN CO.	KNOX CO.	WARREN CO.	KNOX CO.	WARREN CO.	KNOX CO.	KNOX CO.
				0006	0006	0006	0006	0021	0047	0047
				80% FD 20% ST	80% FD 20% ST	100% STATE	100% STATE	80% FD 20% ST	80% FD 20% ST	80% FD 20% ST
44000155	HOT - MIX ASPHALT SURFACE REMOVAL, 1 1/2"	SQ YD	1494.5						1494.5	
44004250	PAVED SHOULDER REMOVAL	SQ YD	3619	2952	667					
44200537	CLASS A PATCHES, TYPE I, 9 INCH	SQ YD	24	20	4					
44200541	CLASS A PATCHES, TYPE II, 9 INCH	SQ YD	938	720	218					
44200545	CLASS A PATCHES, TYPE III, 9 INCH	SQ YD	266	242	24					
44200547	CLASS A PATCHES, TYPE IV, 9 INCH	SQ YD	59	59						
44200571	CLASS A PATCHES, TYPE IV, 11 INCH	SQ YD	374	374						
44201757	CLASS D PATCHES, TYPE III, 9 INCH	SQ YD	144		144					
44213000	PATCHING REINFORCEMENT	SQ YD	1659	1413	246					
44213200	SAW CUTS	FOOT	7146	5798	1348					
44213204	TIE BARS 3/4"	EACH	92	92						
44300200	STRIP REFLECTIVE CRACK CONTROL TREATMENT	FOOT	76333	48344	27989					
48101200	AGGREGATE SHOULDERS, TYPE B	TON	9601	5972	3629					
48203033	HOT - MIX ASPHALT SHOULDERS, 9"	SQ YD	5218	4151	1067					

CODE NO.	ITEM	UNIT	TOTAL QUANTITY	CONSTRUCTION CODE						
				ROADWAY WARREN CO. 0006 80% FD 20% ST	ROADWAY KNOX CO. 0006 80% FD 20% ST	MOWING WARREN CO. 0006 100% STATE	MOWING KNOX CO. 0006 100% STATE	LIGHTING WARREN CO. 0021 80% FD 20% ST	048-0073 048-0074 KNOX CO. 0047 80% FD 20% ST	048-0076 048-0077 KNOX CO. 0047 80% FD 20% ST
48203100	HOT - MIX ASPHALT SHOULDERS	TON	50191	31120	19071					
50102400	CONCRETE REMOVAL	CU YD	54.9						25.5	29.4
50105220	PIPE CULVERT REMOVAL	FOOT	75	75						
50157300	PROTECTIVE SHIELD	SQ YD	818.4						818.4	
50300100	FLOOR DRAINS	EACH	5							5
50300225	CONCRETE STRUCTURES	CU YD	11.6						10	1.6
50300255	CONCRETE SUPERSTRUCTURE	CU YD	52.5						24.1	28.4
50300260	BRIDGE DECK GROOVING	SQ YD	1468						1468	
50300300	PROTECTIVE COAT	SQ YD	142.4						60	82.4
50500405	FURNISHING AND ERECTING STRUCTURAL STEEL	POUND	4190						4190	
50800205	REINFORCEMENT BARS, EPOXY COATED	POUND	7550						4440	3110
50800530	MECHANICAL SPLICERS	EACH	10						10	
52000110	PREFORMED JOINT STRIP SEAL	FOOT	380						165	215
52100010	ELASTOMERIC BEARING ASSEMBLY, TYPE 1	EACH	45						24	21

14

CODE NO.	ITEM	UNIT	TOTAL QUANTITY	CONSTRUCTION CODE						
									048-0073	048-0076
				ROADWAY	ROADWAY	MOWING	MOWING	LIGHTING	048-0074	048-0077
				WARREN CO.	KNOX CO.	WARREN CO.	KNOX CO.	WARREN CO.	KNOX CO.	KNOX CO.
				0006	0006	0006	0006	0021	0047	0047
				80% FD 20% ST	80% FD 20% ST	100% STATE	100% STATE	80% FD 20% ST	80% FD 20% ST	80% FD 20% ST
52100020	ELASTOMERIC BEARING ASSEMBLY, TYPE 2	EACH	7							7
52100520	ANCHOR BOLTS, 1"	EACH	108						48	60
60108100	PIPE UNDERDRAINS 4" (SPECIAL)	FOOT	4272	2634	1638					
60108501	PIPE UNDERDRAINS, TYPE 3	FOOT	169444	104802	64642					
60260100	INLETS TO BE ADJUSTED	EACH	1		1					
60262505	INLETS TO BE ADJUSTED WITH NEW MEDIAN INLET (604106)	EACH	1	1						
* 63000001	STEEL PLATE BEAM GUARD RAIL, TYPE A, 6 FOOT POSTS	FOOT	4713	2750	1963					
* 63100045	TRAFFIC BARRIER TERMINAL, TYPE 2	EACH	10	7	3					
* 63100070	TRAFFIC BARRIER TERMINAL, TYPE 5	EACH	2		2					
* 63100085	TRAFFIC BARRIER TERMINAL, TYPE 6	EACH	8		8					
* 63100167	TRAFFIC BARRIER TERMINAL, TYPE 1 (SPECIAL) TANGENT	EACH	16	7	9					
63200310	GUARDRAIL REMOVAL	FOOT	7580	4209	3371					
64200116	SHOULDER RUMBLE STRIPS, 16 INCH	FOOT	148641	92883	55758					
67000400	ENGINEER'S FIELD OFFICE, TYPE A	CAL MO	8	5	3					

* SPECIALTY ITEM

FILE NAME = C:\Users\aubreygs\Desktop\68339\D468339-plans.dgn	USER NAME = aubreygs	DESIGNED -	REVISED -
	PLOT SCALE = 200.0000 ' / in.	DRAWN -	REVISED -
	PLOT DATE = 12/15/2017	CHECKED -	REVISED -
		DATE -	REVISED -

STATE OF ILLINOIS
DEPARTMENT OF TRANSPORTATION

SUMMARY OF QUANTITIES

F.A.P RTE.	SECTION	COUNTY	TOTAL SHEETS	SHEET NO.
313	94(16,16-1,17)RS,48(17,18)RS	Warren/Knox	118	7
RTE. US 34, IL 110		CONTRACT NO. 68339		
	ILLINOIS FED. AID PROJECT			

REV

	CODE NO.	ITEM	UNIT	TOTAL QUANTITY	CONSTRUCTION CODE						
					ROADWAY	ROADWAY	MOWING	MOWING	LIGHTING	048-0073 048-0074	048-0076 048-0077
									WARREN CO.	KNOX CO.	KNOX CO.
					0006	0006	0006	0006	0021	0047	0047
					80% FD 20% ST	80% FD 20% ST	100% STATE	100% STATE	80% FD 20% ST	80% FD 20% ST	80% FD 20% ST
	67000600	ENGINEER'S FIELD LABORATORY	CAL MO	8	5	3					
	67100100	MOBILIZATION	L SUM	1	0.6	0.4					
*	72501000	TERMINAL MARKER - DIRECT APPLIED	EACH	18	7	11					
*	78008300	POLYUREA PAVEMENT MARKING TYPE II - LETTERS & SYMBOLS	SQ FT	129	86	43					
*	78008310	POLYUREA PAVEMENT MARKING TYPE II - LINE 4"	FOOT	182480	114288	68192					
*	78008330	POLYUREA PAVEMENT MARKING TYPE II - LINE 6"	FOOT	19474	12112	7362					
*	78008340	POLYUREA PAVEMENT MARKING TYPE II - LINE 8"	FOOT	2614	1628	986					
*	78008370	POLYUREA PAVEMENT MARKING TYPE II - LINE 24"	FOOT	114	76	38					
*	78100100	RAISED REFLECTIVE PAVEMENT MARKER	EACH	926	606	320					
*	78200005	GUARDRAIL REFLECTORS, TYPE A	EACH	48	26	22					
	78300200	RAISED REFLECTIVE PAVEMENT MARKER REMOVAL	EACH	926	606	320					
*	83060835	LIGHT POLE, GALVANIZED STEEL, 45FT. M.H., TENON MOUNT-TWIN	EACH	2					2		
	83800650	BREAKAWAY DEVICE, COUPLING, WITH STAINLESS STEEL SCREEN	EACH	8					8		
	X0322584	REVETMENT MAT REMOVAL	SQ YD	656	233	423					

* SPECIALTY ITEM

FILE NAME = C:\Users\aubreygs\Desktop\68339\D468339plans.dgn	USER NAME = aubreygs	DESIGNED -	REVISED -
		DRAWN -	REVISED -
	PLOT SCALE = 200.0000 ' / in.	CHECKED -	REVISED -
	PLOT DATE = 12/15/2017	DATE -	REVISED -

STATE OF ILLINOIS
DEPARTMENT OF TRANSPORTATION

SUMMARY OF QUANTITIES

F.A.P RTE.	SECTION	COUNTY	TOTAL SHEETS	SHEET NO.
313	94(16,16-1,17)RS,48(17,18)RS	Warren/Knox	118	8
RTE. US 34, IL 110		CONTRACT NO. 68339		
		ILLINOIS FED. AID PROJECT		

	CODE NO.	ITEM	UNIT	TOTAL QUANTITY	CONSTRUCTION CODE						
					ROADWAY	ROADWAY	MOWING	MOWING	LIGHTING	048-0073 048-0074	048-0076 048-0077
					WARREN CO.	KNOX CO.	WARREN CO.	KNOX CO.	WARREN CO.	KNOX CO.	KNOX CO.
					0006	0006	0006	0006	0021	0047	0047
					80% FD 20% ST	80% FD 20% ST	100% STATE	100% STATE	80% FD 20% ST	80% FD 20% ST	80% FD 20% ST
	X0600001	MICRO-SURFACING AGGREGATE FOR CENTERLINE JOINT FILLING	TON	153	120	33					
	X0600002	MICRO-SURFACING EMULSIFIED ASHPALT FOR CENTERLINE JOINT FILLING	POUND	36693	28709	7984					
	X0600003	CENTERLINE JOINT CLEANING	FOOT	75830	46404	29426					
	X1200181	SHOULDER REMOVAL AND REPLACEMENT, SPECIAL	FOOT	165718	100238	65480					
*	X1400095	LUMINAIRE, LED, HORIZONTAL MOUNT, HIGH WATTAGE	EACH	4					4		
	X2600002	RECOVERABLE DELINEATOR	EACH	16	12	4					
	X4401198	HOT-MIX ASPHALT SURFACE REMOVAL, VARIABLE DEPTH	SQ YD	141071	87460	53611					
	X4421829	CLASS D PATCHES, TYPE III, 9'' (SPECIAL)	SY	65		65					
	X6024503	INLETS TO BE ADJUSTED WITH NEW FRAME AND GRATE (SPECIAL)	EACH	1	1						
	X6060101	CLASS SI CONCRETE FOR PIPE UNDERDRAIN OUTLET	CY	167	108	59					
	X7010216	TRAFFIC CONTROL AND PROTECTION (SPECIAL)	L SUM	1	0.6	0.4					
*	X7830060	GROOVING FOR RECESSED PAVEMENT MARKING, LETTERS AND SYMBOLS	SQ FT	129	86	43					
*	X7830070	GROOVING FOR RECESSED PAVEMENT MARKING 5"	FOOT	182480	114288	68192					
*	X7830074	GROOVING FOR RECESSED PAVEMENT MARKING 7"	FOOT	19474	12112	7362					

* SPECIALTY ITEM

FILE NAME = C:\Users\aubreygs\Desktop\68339\D468339plans.dgn	USER NAME = aubreygs	DESIGNED -	REVISED -
	PLOT SCALE = 200.0000 ' / in.	DRAWN -	REVISED -
	PLOT DATE = 12/15/2017	CHECKED -	REVISED -
		DATE -	REVISED -

STATE OF ILLINOIS
DEPARTMENT OF TRANSPORTATION

SUMMARY OF QUANTITIES

F.A.P RTE.	SECTION	COUNTY	TOTAL SHEETS	SHEET NO.
313	94(16,16-1,17)RS,48(17,18)RS	Warren/Knox	118	9
RTE. US 34, IL 110		CONTRACT NO. 68339		
		ILLINOIS FED. AID PROJECT		

REV

	CODE NO.	ITEM	UNIT	TOTAL QUANTITY	CONSTRUCTION CODE						
					ROADWAY WARREN CO. 0006 80% FD 20% ST	ROADWAY KNOX CO. 0006 80% FD 20% ST	MOWING WARREN CO. 0006 100% STATE	MOWING KNOX CO. 0006 100% STATE	LIGHTING WARREN CO. 0021 80% FD 20% ST	048-0073 048-0074 KNOX CO. 0047 80% FD 20% ST	048-0076 048-0077 KNOX CO. 0047 80% FD 20% ST
*	X7830076	GROOVING FOR RECESSED PAVEMENT MARKING 9"	FOOT	2614	1628	986					
*	X7830090	GROOVING FOR RECESSED PAVEMENT MARKING 25"	FOOT	114	76	38					
	XZ013798	CONSTRUCTION STATION LAYOUT	L SUM	1	0.6	0.4					
	Z0001002	GUARDRAIL AGGREGATE EROSION CONTROL	TON	1318	701	617					
	Z0001899	JACK AND REMOVE EXISTING BEARINGS	EACH	52						24	28
*	Z0007101	CONTAINMENT AND DISPOSAL OF LEAD PAINT CLEANING RESIDUES NO. 1	L SUM	1						1	
*	Z0007102	CONTAINMENT AND DISPOSAL OF LEAD PAINT CLEANING RESIDUES NO. 2	L SUM	1						1	
*	Z0007103	CONTAINMENT AND DISPOSAL OF LEAD PAINT CLEANING RESIDUES NO. 3	L SUM	1							1
*	Z0007104	CONTAINMENT AND DISPOSAL OF LEAD PAINT CLEANING RESIDUES NO. 4	L SUM	1							1
	Z0010501	CLEANING AND PAINTING STEEL BRIDGE NO. 1	L SUM	1						1	
	Z0010502	CLEANING AND PAINTING STEEL BRIDGE NO. 2	L SUM	1						1	
	Z0010503	CLEANING AND PAINTING STEEL BRIDGE NO. 3	L SUM	1							1
	Z0010504	CLEANING AND PAINTING STEEL BRIDGE NO. 4	L SUM	1							1
	Z0012130	BRIDGE DECK SCARIFICATION 3/4"	SQ YD	1494.5						1494.5	

* SPECIALTY ITEM

FILE NAME = C:\Users\aubreyga\Desktop\68339\D468339-plans.dgn	USER NAME = aubreyga	DESIGNED -	REVISED -
		DRAWN -	REVISED -
	PLOT SCALE = 200.0000 ' / in.	CHECKED -	REVISED -
	PLOT DATE = 12/15/2017	DATE -	REVISED -

STATE OF ILLINOIS
DEPARTMENT OF TRANSPORTATION

SUMMARY OF QUANTITIES

F.A.P RTE.	SECTION	COUNTY	TOTAL SHEETS	SHEET NO.
313	94(16,16-1,17)RS,48(17,18)RS	Warren/Knox	118	10
RTE. US 34, IL 110		CONTRACT NO. 68339		
		ILLINOIS FED. AID PROJECT		

CODE NO.	ITEM	UNIT	TOTAL QUANTITY	CONSTRUCTION CODE						
									048-0073	048-0076
				ROADWAY	ROADWAY	MOWING	MOWING	LIGHTING	048-0074	048-0077
				WARREN CO.	KNOX CO.	WARREN CO.	KNOX CO.	WARREN CO.	KNOX CO.	KNOX CO.
				0006	0006	0006	0006	0021	0047	0047
				80% FD 20% ST	80% FD 20% ST	100% STATE	100% STATE	80% FD 20% ST	80% FD 20% ST	80% FD 20% ST
Z0012162	BRIDGE DECK MICROSILICA CONCRETE OVERLAY 2 1/4"	SQ YD	1494.5						1494.5	
Z0012754	STRUCTURAL REPAIR OF CONCRETE (DEPTH EQUAL TO OR LESS THAN 5 INCHES)	SQ FT	126.9						84.4	42.5
Z0012755	STRUCTURAL REPAIR OF CONCRETE (DEPTH GREATER THAN 5 INCHES)	SQ FT	15.3							15.3
Z0016001	DECK SLAB REPAIR (FULL DEPTH, TYPE I)	SQ YD	6.7						5.6	1.1
Z0034105	MATERIAL TRANSFER DEVICE	TON	72660	46839	25821					
Ø 20076600	TRAINEES	HOUR	1000	1000						
Ø 20076604	TRAINEES - TRAINING PROGRAM GRADUATE	HOUR	1000	1000						

Ø 0042

FILE NAME =	USER NAME = aubreygs	DESIGNED -	REVISED -	STATE OF ILLINOIS DEPARTMENT OF TRANSPORTATION	SUMMARY OF QUANTITIES
C:\Users\aubreygs\Desktop\68339\D468339plans.dgn		DRAWN -	REVISED -		
	PLOT SCALE = 200.0000 ' / in.	CHECKED -	REVISED -		
	PLOT DATE = 12/15/2017	DATE -	REVISED -		

F.A.P RTE.	SECTION	COUNTY	TOTAL SHEETS	SHEET NO.
313	94(16,16-1,17)RS,48(17,18)RS	Warren/Knox	118	11
RTE. US 34, IL 110		CONTRACT NO. 68339		
		ILLINOIS FED. AID PROJECT		

REV

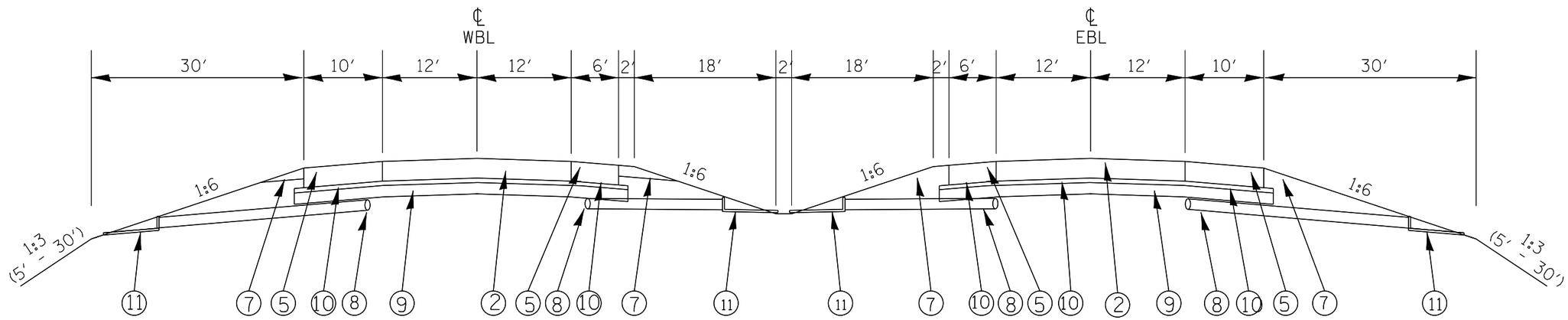

TYPICAL SECTION #1 - EXISTING US 34 EB & WB

STA 542+00 TO 363+90
Station Equation 712+50 (Bk) = 710+00 (Ah)
STA. 710+00 to 781+22
Sta. Equa. 898+54 (BK) = 330+50 (AH)
Sta. Equa. 343+65 (BK) = 344+67 (AH)

EXISTING LEGEND

1. Contiunously Reinforced Concrete Pavement 8″
2. Contiunously Reinforced Concrete Pavement 9″
3. Contiunously Reinforced Concrete Pavement 10″
4. Bituminous Shoulders 8″
5. Bituminous Shoulders 9″
6. Bituminous Shoulders 10″
7. Aggregate Shoulder, Type B
8. Pipe Underdrains 4″ or 6″
9. Lime Modified Soil 12″
10. Stabilized Subbase 4″ (CAM II)
11. Concrete Headwall for Pipe Drains

PROPOSED LEGEND

20. Polymerized Hot-Mix Asphalt Surface Course, Mix ″D″, N70
21. Polymerized Hot-Mix Asphalt Binder Course, IL-9.5, N70
22. Polymerized Leveling Binder (Machine Method), IL-4.75, N50
23. Hot-Mix Asphalt Surface Removal, Variable Depth
24. Hot-Mix Asphalt Shoulders, 6.25″
25. Aggregate Shoulder, Type B (Wedge)
26. Proposed Pipe Underdrain Type 3 & 4″ (Special) See Detail B
27. Strip Reflective Crack Control
28. Centerline Joint Filling With Micro-surfacing Material
29. Steel Plate Beam Guardrail
30. Pipe Underdrain Outlet Protection

NOT TO SCALE

FILE NAME = C:\Users\aubreygs\Desktop\68339\D468339-plans.dgn	USER NAME = aubreygs	DESIGNED -	REVISED -
		DRAWN -	REVISED -
	PLOT SCALE = 200.0000 ′ / in.	CHECKED -	REVISED -
Default	PLOT DATE = 12/15/2017	DATE -	REVISED -

STATE OF ILLINOIS
DEPARTMENT OF TRANSPORTATION

TYPICAL SECTIONS

SCALE: | SHEET OF SHEETS | STA. TO STA.

FAP 313	SECTION	COUNTY	TOTAL SHEETS	SHEET NO.
	94(16,16-1,17)RS,48(17,18)RS	WARREN-KNOX	118	12
RTE US 34/IL 110		CONTRACT NO. 68339		
		ILLINOIS FED. AID PROJECT		

EXISTING LEGEND

1. Contiunously Reinforced Concrete Pavement 8"
2. Contiunously Reinforced Concrete Pavement 9"
3. Contiunously Reinforced Concrete Pavement 10"
4. Bituminous Shoulders 8"
5. Bituminous Shoulders 9"
6. Bituminous Shoulders 10"
7. Aggregate Shoulder, Type B
8. Pipe Underdrains 4" or 6"
9. Lime Modified Soil 12"
10. Stabilized Subbase 4" (CAM II)
11. Concrete Headwall for Pipe Drains

PROPOSED LEGEND

20. Polymerized Hot-Mix Asphalt Surface Course, Mix "D", N70
21. Polymerized Hot-Mix Asphalt Binder Course, IL-9.5, N70
22. Polymerized Leveling Binder (Machine Method), IL-4.75, N50
23. Hot-Mix Asphalt Surface Removal, Variable Depth
24. Hot-Mix Asphalt Shoulders, 6.25"
25. Aggregate Shoulder, Type B (Wedge)
26. Proposed Pipe Underdrain Type 3 & 4" (Special) See Detail B
27. Strip Reflective Crack Control
28. Centerline Joint Filling With Micro-surfacing Material
29. Steel Plate Beam Guardrail
30. Pipe Underdrain Outlet Protection

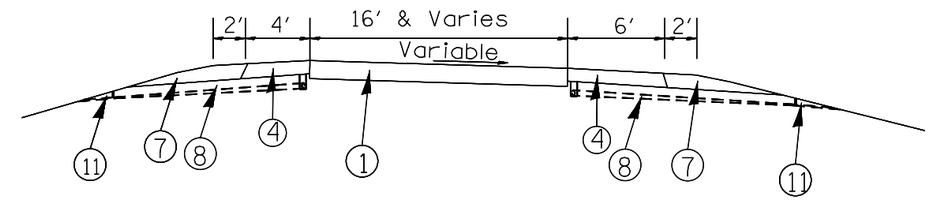

TYPICAL SECTION #2 - EXISTING CAMERON RD INTERCHANGE RAMPS

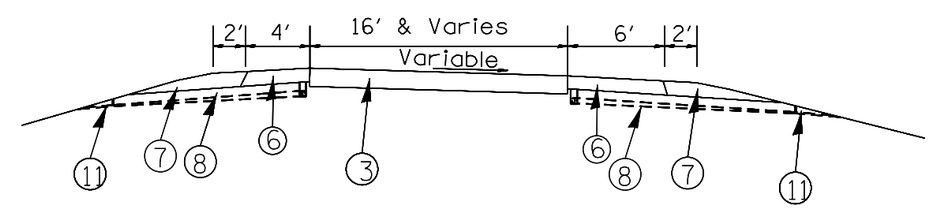

TYPICAL SECTION #3 - EXISTING IL 164 (MAIN ST) INTERCHANGE RAMPS

NOT TO SCALE

FILE NAME = C:\Users\aubreygs\Desktop\68339\D468339-plans.dgn	USER NAME = aubreygs	DESIGNED -	REVISED -	STATE OF ILLINOIS DEPARTMENT OF TRANSPORTATION	TYPICAL SECTIONS	FAP 313	SECTION	COUNTY	TOTAL SHEETS	SHEET NO.
		DRAWN -	REVISED -				94(16,16-1,17)RS,48(17,18)RS	WARREN-KNOX	118	13
	PLOT SCALE = 200.0000 ' / in.	CHECKED -	REVISED -			RTE US 34/IL 110		CONTRACT NO. 68339		
Default	PLOT DATE = 12/15/2017	DATE -	REVISED -		SCALE: SHEET OF SHEETS STA. TO STA.		ILLINOIS FED. AID PROJECT			

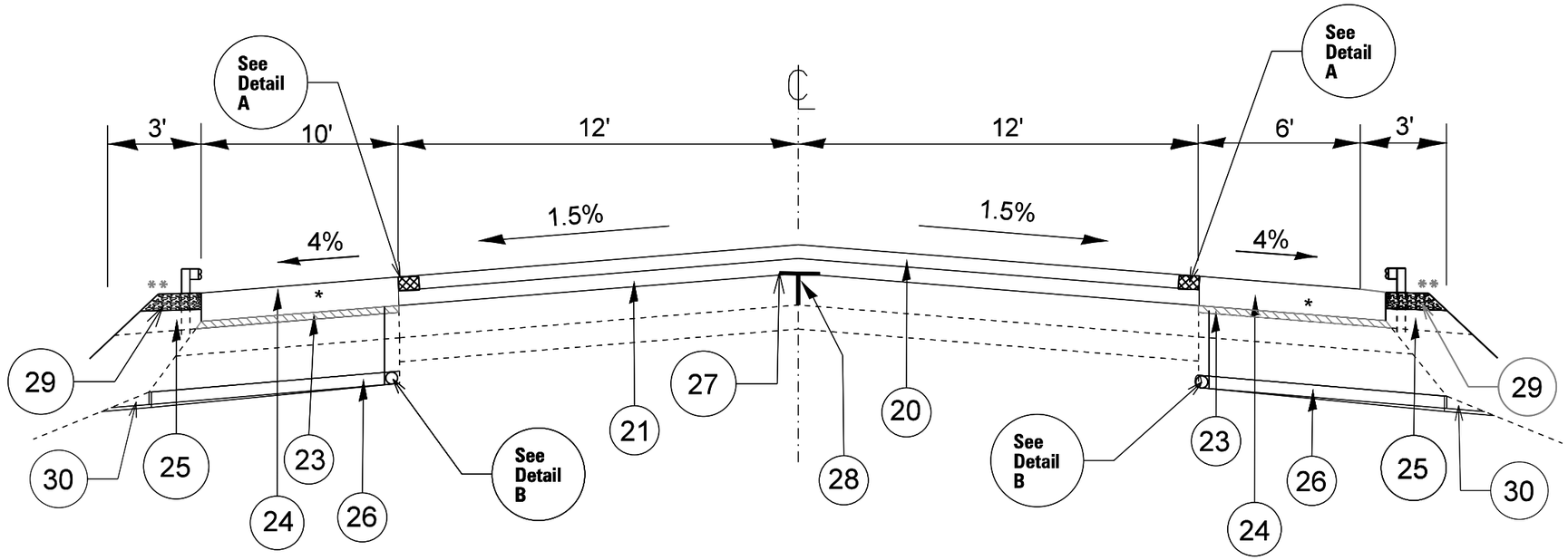

TYPICAL SECTION #4 - PROPOSED US 34 EB & WB (WARREN COUNTY)

STA. 542+00 TO STA. 712+50
Station Equation 712+50 (Bk) = 710+00 (Ah)
STA. 710+00 to 781+22

EXISTING LEGEND

1. Contiunously Reinforced Concrete Pavement 8"
2. Contiunously Reinforced Concrete Pavement 9"
3. Contiunously Reinforced Concrete Pavement 10"
4. Bituminous Shoulders 8"
5. Bituminous Shoulders 9"
6. Bituminous Shoulders 10"
7. Aggregate Shoulder, Type B
8. Pipe Underdrains 4" or 6"
9. Lime Modified Soil 12"
10. Stabilized Subbase 4" (CAM II)
11. Concrete Headwall for Pipe Drains

PROPOSED LEGEND

20. Polymerized Hot-Mix Asphalt Surface Course, Mix "D", N70
21. Polymerized Hot-Mix Asphalt Binder Course, IL-9.5, N70
22. Polymerized Leveling Binder (Machine Method), IL-4.75, N50
23. Hot-Mix Asphalt Surface Removal, Variable Depth
24. Hot-Mix Asphalt Shoulders, 6.25" *
25. Aggregate Shoulder, Type B (Wedge)
26. Proposed Pipe Underdrain Type 3 & 4" (Special) See Detail B
27. Strip Reflective Crack Control
28. Centerline Joint Filling With Micro-surfacing Material
29. Steel Plate Beam Guardrail **
30. Pipe Underdrain Outlet Protection

FILE NAME = C:\Users\aubreygs\Desktop\68339\D468339-plans.dgn	USER NAME = aubreygs	DESIGNED -	REVISED -	STATE OF ILLINOIS DEPARTMENT OF TRANSPORTATION	TYPICAL SECTIONS	F.A.P. 313	SECTION 94(16,16-1,17)RS,48(17,18)RS	COUNTY Warren/Knox	TOTAL SHEETS 118	SHEET NO. 14
	PLOT SCALE = 200.0000 ' / in.	DRAWN -	REVISED -			RTE. US 34, IL 110			CONTRACT NO. 68339	
	PLOT DATE = 12/15/2017	CHECKED -	REVISED -		SCALE:	SHEET NO. OF SHEETS	STA. TO STA.		ILLINOIS FED. AID PROJECT	
		DATE -	REVISED -							

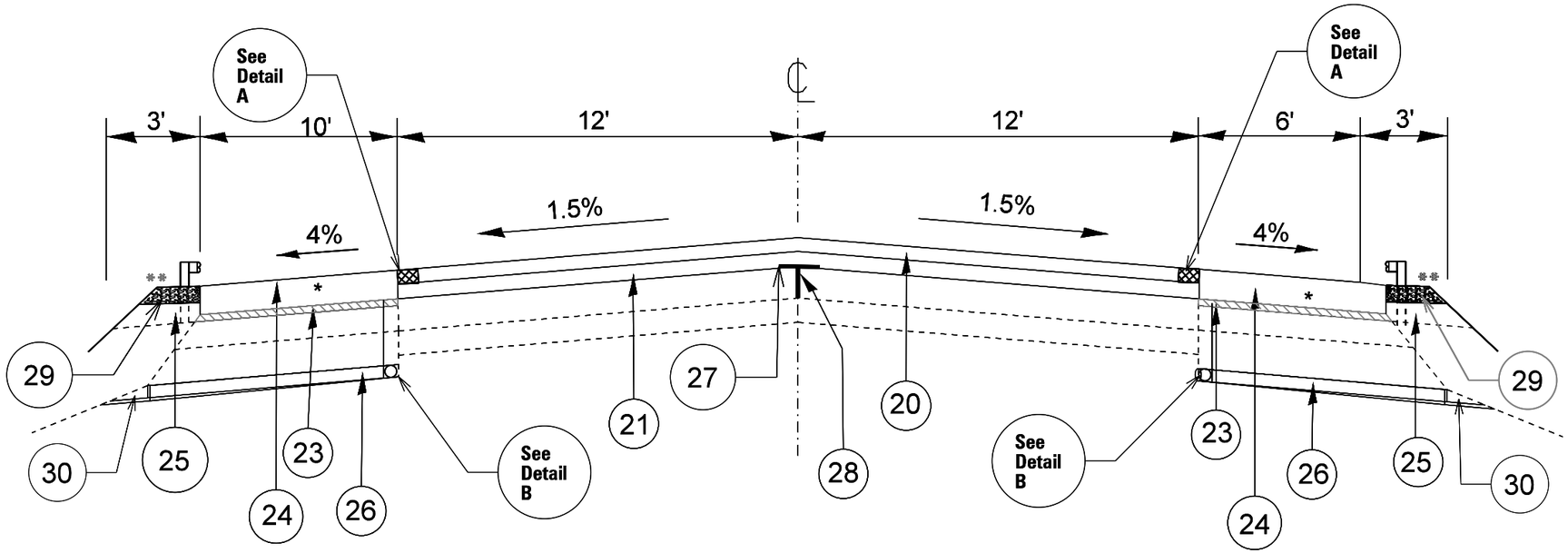

TYPICAL SECTION #5 - PROPOSED US 34 EB & WB (KNOX COUNTY)

STA. 781+22 TO STA. 363+90
EB STA. EQUAT. 898+97 (BK)=330+50 (AH)
WB STA. EQUAT. 897+98 (BK) = 330+50 (AH)
STA. EQUAT. 343+65 (BK) = 344+67 (AH)

BRIDGE OMISSIONS

EB 894+29 TO 896+31 EB 350+15 TO 351+95
WB 892+42 TO 894+83 WB 350+29 TO 352+15

EXISTING LEGEND

1. Contiunously Reinforced Concrete Pavement 8"
2. Contiunously Reinforced Concrete Pavement 9"
3. Contiunously Reinforced Concrete Pavement 10"
4. Bituminous Shoulders 8"
5. Bituminous Shoulders 9"
6. Bituminous Shoulders 10"
7. Aggregate Shoulder, Type B
8. Pipe Underdrains 4" or 6"
9. Lime Modified Soil 12"
10. Stabilized Subbase 4" (CAM II)
11. Concrete Headwall for Pipe Drains

PROPOSED LEGEND

20. Polymerized Hot-Mix Asphalt Surface Course, Mix "D", N70
21. Polymerized Hot-Mix Asphalt Binder Course, IL-9.5, N70
22. Polymerized Leveling Binder (Machine Method), IL-4.75, N50
23. Hot-Mix Asphalt Surface Removal, Variable Depth
24. Hot-Mix Asphalt Shoulders, 6.25" *
25. Aggregate Shoulder, Type B (Wedge)
26. Proposed Pipe Underdrain Type 3 & 4" (Special) See Detail B
27. Strip Reflective Crack Control
28. Centerline Joint Filling With Micro-surfacing Material
29. Steel Plate Beam Guardrail **
30. Pipe Underdrain Outlet Protection

* The existing HMA shoulder along the entire project is lower than the Mainline Concrete Pavement by approximately 2 1/2"

** **Note:**
See schedule of quantities for location of proposed SPBGR & guardrail aggregate erosion control in WARREN & KNOX Counties

FILE NAME = C:\Users\aubreygs\Desktop\68339\D468339-plans.dgn	USER NAME = aubreygs	DESIGNED -	REVISED -	STATE OF ILLINOIS DEPARTMENT OF TRANSPORTATION	TYPICAL SECTIONS	FAP 313	SECTION	COUNTY	TOTAL SHEETS	SHEET NO.
		DRAWN -	REVISED -				94(16,16-1,17)RS,48(17,18)RS	WARREN-KNOX	118	15
	PLOT SCALE = 200.0000 ' / in.	CHECKED -	REVISED -			RTE US 34/IL 110		CONTRACT NO. 68339		
	PLOT DATE = 12/15/2017	DATE -	REVISED -		SCALE: SHEET NO. OF SHEETS STA. TO STA.		ILLINOIS FED. AID PROJECT			

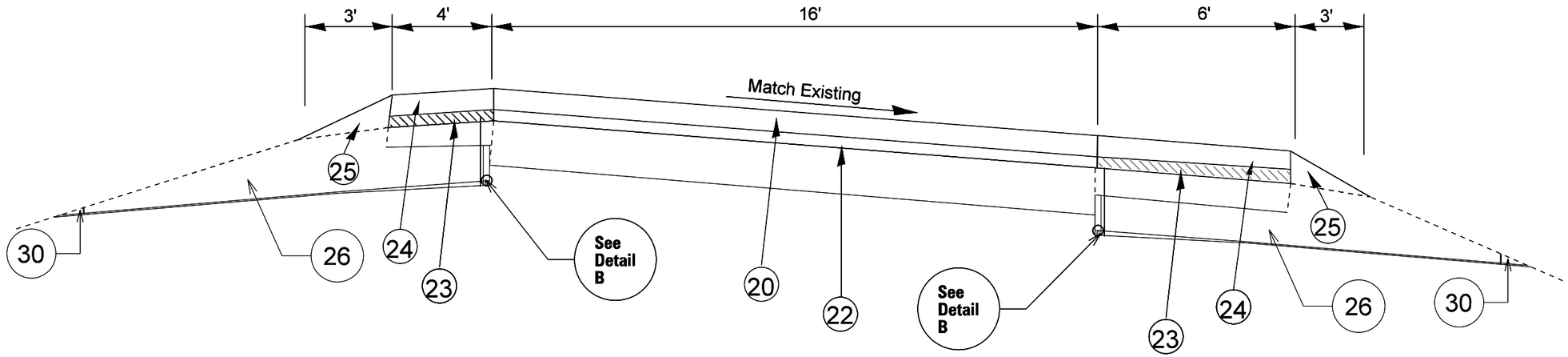

EXISTING LEGEND

1. Contiunously Reinforced Concrete Pavement 8''
2. Contiunously Reinforced Concrete Pavement 9''
3. Contiunously Reinforced Concrete Pavement 10''
4. Bituminous Shoulders 8''
5. Bituminous Shoulders 9''
6. Bituminous Shoulders 10''
7. Aggregate Shoulder, Type B
8. Pipe Underdrains 4'' or 6''
9. Lime Modified Soil 12''
10. Stabilized Subbase 4'' (CAM II)
11. Concrete Headwall for Pipe Drains

TYPICAL SECTION #6 - PROPOSED CAMERON RD INTERCHANGE RAMPS

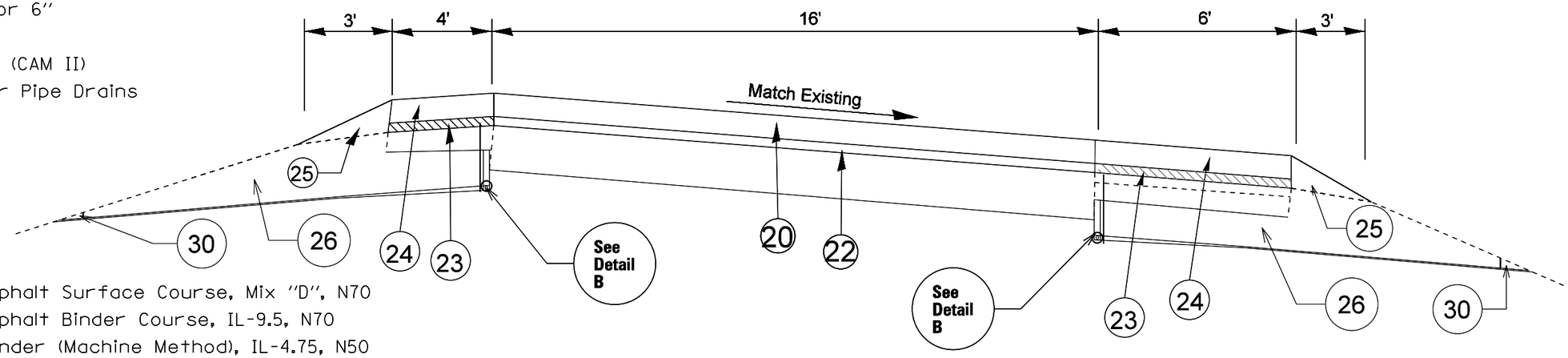

PROPOSED LEGEND

20. Polymerized Hot-Mix Asphalt Surface Course, Mix ''D'', N70
21. Polymerized Hot-Mix Asphalt Binder Course, IL-9.5, N70
22. Polymerized Leveling Binder (Machine Method), IL-4.75, N50
23. Hot-Mix Asphalt Surface Removal, Variable Depth
24. Hot-Mix Asphalt Shoulders, 6.25'' *
25. Aggregate Shoulder, Type B (Wedge)
26. Proposed Pipe Underdrain Type 3 & 4'' (Special) See Detail B
27. Strip Reflective Crack Control
28. Centerline Joint Filling With Micro-surfacing Material
29. Steel Plate Beam Guardrail
30. Pipe Underdrain Outlet Protection

TYPICAL SECTION #7 - PROPOSED IL 164 (MAIN ST) INTERCHANGE RAMPS

* The existing HMA shoulders along US 34 & IL 164 Ramps are lower than the Ramps Concrete pavement by approximately 2 1/2"

FILE NAME = C:\Users\aubreygs\Desktop\68339\D468339-plans.dgn	USER NAME = aubreygs	DESIGNED -	REVISED -
		DRAWN -	REVISED -
	PLOT SCALE = 200.0000 ' / in.	CHECKED -	REVISED -
	PLOT DATE = 12/15/2017	DATE -	REVISED -

STATE OF ILLINOIS
DEPARTMENT OF TRANSPORTATION

TYPICAL SECTIONS

SCALE: | SHEET NO. OF SHEETS | STA. TO STA.

FAP 313	SECTION	COUNTY	TOTAL SHEETS	SHEET NO.
	94(16,16-1,17)RS,48(17,18)RS	WARREN-KNOX	118	16
RTE US 34/IL 110		CONTRACT NO. 68339		
	ILLINOIS	FED. AID PROJECT		

DETAIL "A"

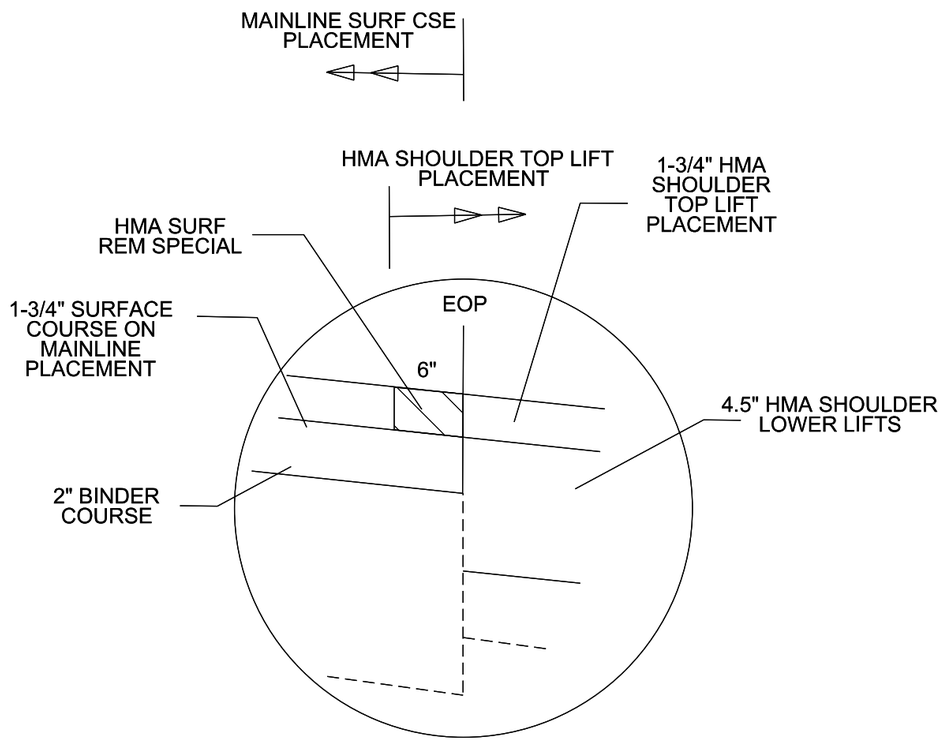

SHOWING HMA SURFACE REMOVAL-SPECIAL AT EDGE OF PAVEMENT
SEE SPECIAL PROVISION FOR CONSTRUCTION SEQUENCE
DETAIL IS SHOWN FOR RT EOP. REVERSE FOR LT EOP.

NOT TO SCALE

DETAIL "B"

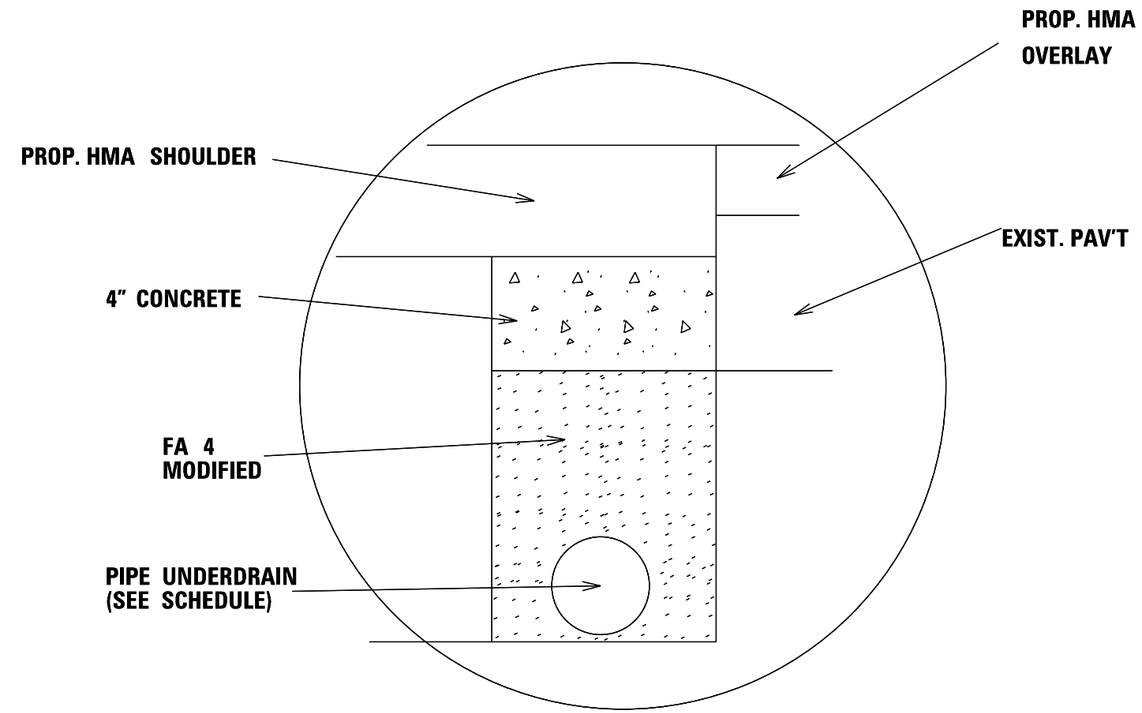

PIPE UNDERDRAIN INSTALLATION
DETAIL IS SHOWN FOR LT EOP. REVERSE FOR RT.

NOT TO SCALE

FILE NAME = C:\Users\aubreygs\Desktop\68339\D468339-plans.dgn	USER NAME = aubreygs	DESIGNED -	REVISED -
		DRAWN -	REVISED -
	PLOT SCALE = 200.0000 ' / in.	CHECKED -	REVISED -
	PLOT DATE = 12/15/2017	DATE -	REVISED -

STATE OF ILLINOIS
DEPARTMENT OF TRANSPORTATION

TYPICAL SECTIONS

SCALE: | SHEET NO. OF SHEETS | STA. TO STA.

FAP 313	SECTION	COUNTY	TOTAL SHEETS	SHEET NO.
	94(16,16-1,17)RS,48(17,18)RS	WARREN-KNOX	118	17
RTE US 34/IL 110		CONTRACT NO. 68339		
		ILLINOIS FED. AID PROJECT		

UNDERDRAINS & HEADWALLS (SHEET 1 OF 2)

LATERAL UNDERDRAINS AND HEADWALLS - WARREN COUNTY MAINLINE						
PIPE UNDERDRAINS 4" (SPECIAL)					NUMBER OF HEAD WALLS	CLASS SI CONCRETE FOR PIPE UNDERDRAIN OUTLET
STATION	E. BOUND (FOOT)		W. BOUND (FOOT)			
	OUTSIDE	MEDIAN	OUTSIDE	MEDIAN		CU. YD
551+00	0	15	0	15	2	1.26
554+00	0	0	16	0	1	0.63
557+00	0	15	0	15	2	1.26
558+50	16	0	16	0	2	1.26
563+50	16	15	16	15	4	2.52
568+50	16	15	16	15	4	2.52
581+00	16	15	16	15	4	2.52
593+00	16	15	16	15	4	2.52
599+00	16	15	16	15	4	2.52
605+00	16	15	16	15	4	2.52
611+00	16	15	16	15	4	2.52
617+00	16	15	16	15	4	2.52
623+00	16	15	16	15	4	2.52
628+00	16	15	16	15	4	2.52
633+00	16	15	16	15	4	2.52
638+00	16	15	16	15	4	2.52
643+00	16	15	16	15	4	2.52
648+00	16	15	16	15	4	2.52
653+00	16	15	16	15	4	2.52
657+50	16	15	16	15	4	2.52
668+50	16	15	16	15	4	2.52
674+00	16	16	16	15	4	2.52
680+00	16	15	16	15	4	2.52
686+00	16	15	16	15	4	2.52
691+00	16	15	16	15	4	2.52
696+50	16	15	16	15	4	2.52
702+00	16	15	16	15	4	2.52
707+50	16	15	16	15	4	2.52
710+50	16	15	16	15	4	2.52
723+00	16	15	16	15	4	2.52
729+00	16	15	16	15	4	2.52
734+00	16	15	16	15	4	2.52
739+00	16	15	16	15	4	2.52
749+00	16	15	16	15	4	2.52
754+50	16	15	16	15	4	2.52
760+00	16	15	16	15	4	2.52
766+00	16	15	16	15	4	2.52
772+00	16	15	16	15	4	2.52
778+00	16	15	16	15	4	2.52
SUBTOTALS	2,279				93.0	

LATERAL UNDERDRAINS AND HEADWALLS - WARREN COUNTY RAMPS				
PIPE UNDERDRAINS 4" (SPECIAL)			NUMBER OF HEAD WALLS	CLASS SI CONCRETE FOR PIPE UNDERDRAIN OUTLET
STATION	LT BASE LINE	RT BASE LINE		
	FOOT	FOOT		CU. YD
CAMERON RD RAMPS				
RAMP 'A'				
4+01	15	0	1	0.63
6+50	0	15	1	0.63
9+00	15	0	1	0.63
12+50	0	15	1	0.63
14+00	15	0	1	0.63
RAMP 'B'				
5+00	0	15	1	0.63
6+25	15	0	1	0.63
7+75	10	0	1	0.63
10+00	0	15	1	0.63
15+00	0	15	1	0.63
RAMP 'C'				
5+00	15	15	2	1.26
10+00	15	15	2	1.26
14+50	15	15	2	1.26
16+65	15	15	2	1.26
RAMP 'D'				
4+00	15	15	2	1.26
7+25	15	15	2	1.26
15+50	15	15	2	1.26
SUBTOTALS	355		15	

WARREN COUNTY SUBTOTALS		
PIPE UNDERDRAIN TYPE 3	PIPE UNDERDRAIN 4" (SPECIAL)	**CLASS SI CONCRETE FOR PIPE UNDERDRAIN OUTLET**
FOOT	FOOT	**CU. YD**
104,802	2634	108

LONGITUDINAL UNDERDRAINS - WARREN COUNTY				
PIPE UNDERDRAINS TYPE 3				
LOCATION	STATION			FOOT
US 34 - MAINLINE WEST BOUND LANE				
RT CNTR LN	545+50	TO	568+50	2250
LT CNTR LN	553+12	TO	568+50	1538
LT	568+50	TO	574+50	1200
LT CNTR LN	574+50	TO	577+63	313
RT CNTR LN	574+50	TO	587+50	1300
LT	587+50	TO	592+50	1000
LT CNTR LN	592+50	TO	712+50	24000
LT CNTR LN	710+00	TO	735+50	5100
LT	735+50	TO	736+50	200
LT CNTR LN	736+50	TO	742+50	1200
LT	742+50	TO	743+80	260
LT CNTR LN	743+80	TO	747+50	740
LT	747+50	TO	749+00	300
LT CNTR LN	749+00	TO	758+00	1800
LT CNTR LN	758+00	TO	781+22	4644
US 34 - MAINLINE EAST BOUND LANE				
RT CNTR LN	545+50	TO	568+50	2250
LT CNTR LN	548+43	TO	568+50	2007
RT	568+50	TO	576+70	1640
RT CNTR LN	576+70	TO	587+50	1080
LT CNTR LN	586+20	TO	587+50	130
RT	587+50	TO	593+00	1100
RT CNTR LN	593+00	TO	712+50	23900
STA. EQUATION: STA. 712+50 (BK) = STA. 710+00 (AH)				
RT CNTR LN	710+00	TO	735+50	5100
RT	735+50	TO	737+50	400
RT CNTR LN	737+50	TO	742+50	1000
RT	742+50	TO	743+80	260
RT CNTR LN	743+80	TO	747+50	740
RT	747+50	TO	748+50	200
RT CNTR LN	748+50	TO	758+00	1900
RT CNTR LN	758+00	TO	781+22	4644
CAMERON RD RAMPS				
RAMP 'A'				
RT BSE LINE	0+00	TO	18+74	1874
LT BSE LINE	4+00	TO	19+00	1500
RAMP 'B'				
RT BSE LINE	0+90	TO	19+65	1875
LT BSE LINE	1+30	TO	9+82	852
RAMP 'C'				
RT BSE LINE	0+00	TO	18+70	1870
LT BSE LINE	4+00	TO	18+84	1484
RAMP 'D'				
RT BSE LINE	0+77	TO	7+25	648
RT	7+25	TO	10+25	300
RT	7+25	TO	13+43	618
RT BSE LINE	13+43	TO	22+93	950
LT BSE LINE	0+90	TO	7+25	635
SUBTOTAL				104,802

UNDERDRAINS & HEADWALLS (SHEET 2 OF 2)

LATERALS AND HEADWALLS - KNOX COUNTY						
PIPE UNDERDRAINS 4" (SPECIAL)					NUMBER OF HEAD WALLS	CLASS SI CONCRETE FOR PIPE UNDERDRAIN OUTLET
STATION	E. BOUND (FOOT)		W. BOUND (FOOT)			
	OUTSIDE	MEDIAN	OUTSIDE	MEDIAN		CU. YD
783+81	16	15	16	15	4	2.52
788+50	16	15	16	15	4	2.52
793+00	16	15	16	15	4	2.52
799+00	16	15	16	16	4	2.52
810+00	16	15	16	15	4	2.52
815+00	16	15	16	15	4	2.52
820+00	16	15	16	15	4	2.52
825+00	16	15	16	15	4	2.52
830+00	16	15	16	15	4	2.52
LT / RT 834+50	32	22	30	22	4	2.52
839+00	16	15	16	15	4	2.52
844+00	16	11	16	15	4	2.52
849+00	16	15	16	15	4	2.52
855+00	16	11	16	15	4	2.52
861+00	16	11	16	11	4	2.52
867+00	16	11	16	11	2	1.26
878+00	16	11	16	11	4	2.52
884+00	16	11	16	11	2	1.26
888+00	16	11	16	11	4	2.52
892+00	16	26	16	38	2	1.26
896+00	16	27	16	30	2	1.26
STA. EQ. E.B. 898+97 (BK), W.B. STA. 897+98 (BK) = C.L. STA. 898+54 (BK) = STA. 333+50 (AH)						
335+50	0	15	0	15	2	1.26
340+00	16	15	16	15	4	2.52
STA. EQ. 343+65 (BK) =STA. 344+67 (AH)						
345+50	16	15	16	15	4	2.52
358+00	16	15	16	15	4	2.52
363+00	0	0	16	0	1	0.63
363+50	16	0	0	0	1	0.63
363+75	0	15	0	0	1	0.63
364+50	0	0	0	15	1	0.63
SUBTOTALS	1,638				59	

LONGITUDINAL UNDERDRAINS - KNOX COUNTY				
PIPE UNDERDRAINS TYPE 3				
LOCATION	STATION			FOOT
US 34 - MAINLINE WEST BOUND LANE				
LT CNTR LN	781+22	TO	890+35	10,913
RT CNTR LN	781+22	TO	892+56	11,134
RT CNTR LN	894+97	TO	897+98	301
STA. EQ. W.B. STA. 897+98 (BK) = STA. 333+50 (AH)				
LT CNTR LN	335+36	TO	343+65	829
STA. EQ. W.B. STA. 343+65 (BK) = STA. 344+67 (AH)				
LT CNTR LN	344+67	TO	349+96	1406
RT CNTR LN	333+50	TO	349+96	1646
LT CNTR LN	351+75	TO	363+00	1125
RT CNTR LN	351+75	TO	364+50	1275
US 34 - MAINLINE EAST BOUND LANE				
RT CNTR LN	781+22	TO	797+50	3256
RT CNTR LN	797+50	TO	799+50	400
RT CNTR LN	799+50	TO	834+50	7000
RT CNTR LN	834+50	TO	838+50	800
RT CNTR LN	838+50	TO	894+03	5553
LT CNTR LN	838+50	TO	894+17	5567
RT CNTR LN	896+03	TO	898+97	294
LT CNTR LN	898+80	TO	898+97	17
STA. EQ. E.B. 898+97 (BK) = STA. 333+50 (AH)				
RT CNTR LN	333+50	TO	350+11	3322
RT CNTR LN	351+96	TO	363+75	1179
LT CNTR LN	351+96	TO	363+60	1164
MAIN ST (IL 164) RAMPS				
RAMP 'C'				
LT SL TO RT BL	40+78	TO	21+09	2157
LT SL TO LT BL	42+19	TO	15+65	1577
RAMP 'D'				
RT BL TO LT SL	1+48	TO	54+70	2027
LT BL TO LT BL	4+00	TO	21+00	1700
SUBTOTAL				64,642

SHOULDER REMOVAL AND REPLACEMENT, SPECIAL	
LOCATION	FOOT
WARREN COUNTY	100,238
KNOX COUNTY	65,480
TOTAL	165,718

KNOX COUNTY SUBTOTALS

PIPE UNDERDRAIN TYPE 3	PIPE UNDERDRAIN 4" (SPECIAL)	**CLASS SI CONCRETE FOR PIPE UNDERDRAIN OUTLET**
FOOT	FOOT	**CU. YD**
64,642	1638	59

GRAND TOTALS

PIPE UNDERDRAIN TYPE 3	PIPE UNDERDRAIN 4" (SPECIAL)	**CLASS SI CONCRETE FOR PIPE UNDERDRAIN OUTLET**
FOOT	FOOT	**CU. YD**
169,444	4,272	167

BUTT JOINTS

LOCATION			STATION	TO	STATION	LENGTH	WIDTH	PCC SURFACE REMOVAL (BUTT JOINT)	HMA SURFACE REMOVAL (BUTT JOINT)	TEMPORARY RAMP
						FT	FT	SQ YD	SQ YD	SQ YD
WARREN COUNTY (RURAL)										
EB	START OF PROJECT	Mainline	542+70	TO	543+50	80	24	213	-	27
		Shoulder	542+00	TO	543+50	150	16	-	267	18
WB	START OF PROJECT	Mainline	542+70	TO	543+50	80	24	213	-	27
		Shoulder	542+00	TO	543+50	150	16	-	267	18
RAMPS	CAMERON RD. RAMP A	Ramp	17+94	TO	18+49	55	16	98	-	18
		Shoulder	17+94	TO	18+49	55	10	-	61	11
	CAMERON RD. RAMP B	Ramp	1+42	TO	1+97	55	16	98	-	18
		Shoulder	1+42	TO	1+97	55	10	-	61	11
	CAMERON RD. RAMP C	Ramp	17+94	TO	18+49	55	16	98	-	18
		Shoulder	17+94	TO	18+49	55	10	-	61	11
	CAMERON RD. RAMP D	Ramp	1+02	TO	1+57	55	16	98	-	18
		Shoulder	1+02	TO	1+57	55	10	-	61	11
WARREN COUNTY (RURAL) TOTAL								818	778	205
KNOX COUNTY (URBAN)										
EB	WEST OF SN 048-0077 (OVER CEDAR CREEK)	Mainline	892+61	TO	894+11	150 *	24	430	-	27
		Shoulder	892+61	TO	894+11	150 *	16	-	293	18
	EAST OF SN 048-0077 (OVER CEDAR CREEK)	Mainline	896+12	TO	897+62	150 *	VARIABLE	618	-	42
		Shoulder	896+12	TO	897+62	150 *	VARIABLE	-	289	18
	WEST OF SN 048-0074 (OVER MAIN ST.)	Mainline	348+61	TO	350+11	150	24	400	-	27
		Shoulder	348+61	TO	350+11	150	16	-	267	18
	EAST OF SN 048-0074 (OVER MAIN ST.)	Mainline	351+96	TO	353+46	150	24	400	-	27
		Shoulder	351+96	TO	353+46	150	16	-	267	18
	END OF PROJECT	Mainline	362+40	TO	363+90	150	24	-	400	27
		Shoulder	362+40	TO	363+90	150	16	-	267	18
WB	WEST OF SN 048-0076 (OVER CEDAR CREEK)	Mainline	890+98	TO	892+48	150 *	VARIABLE	460	-	27
		Shoulder	890+98	TO	892+48	150 *	VARIABLE	-	289	18
	EAST OF SN 048-0076 (OVER CEDAR CREEK)	Mainline	894+89	TO	896+43	154 *	VARIABLE	594	-	38
		Shoulder	894+89	TO	896+43	154 *	VARIABLE	-	297	18
	WEST OF SN 048-0073 (OVER MAIN ST.)	Mainline	348+46	TO	349+96	150	24	400	-	27
		Shoulder	348+46	TO	349+96	150	16	-	267	18
	EAST OF SN 048-0073 (OVER MAIN ST.)	Mainline	351+75	TO	353+25	150	24	400	-	27
		Shoulder	351+75	TO	353+25	150	16	-	267	18
	END OF PROJECT	Mainline	362+40	TO	363+90	150	24	-	400	27
		Shoulder	362+40	TO	363+90	150	16	-	267	18
RAMPS	MAIN ST. RAMP C	Ramp	1+00	TO	1+55	55	16	98	-	18
		Shoulder	1+00	TO	1+55	55	10	-	61	11
	MAIN ST. RAMP D	Ramp	20+45	TO	21+00	55	16	98	-	18
		Shoulder	20+45	TO	21+00	55	10	-	61	11
KNOX COUNTY (URBAN) TOTAL								3897	3689	530
GRAND TOTAL								4715	4467	735

NOTE: TEN FOOT LONG TEMPORARY RAMPS FOR CONSTRUCTION TRAFFIC

* - BRIDGE JOINTS ON SKEW, VARIABLE LENGTH

RUMBLE STRIPS & STRIP REFLECTIVE CRACK CONTROL

Location			Shoulder Length	Shoulder Rumble Strips 16"	Strip Reflective Crack Control
			Feet	Feet	Feet
WARREN COUNTY (RURAL)					
542+00	**To**	**712+50**	17050		
Station Equation: STA. 712+50 (Bk) = STA. 710+00 (Ah)					
710+00	**To**	**781+22**	7122		
Subtotal Length			24172		
x 4 (EB x 2, WB x 2)				96688	
x 2 (EB CL, WB CL)					48344
Deduct Cameron Rd Ramp Gores + Tapers				-3805	
Warren County Subtotal				**92883**	**48344**
KNOX COUNTY (URBAN)					
EASTBOUND					
781+22	**To**	**898+37**	11715		
Station Equation: STA. 898+97.38 (Bk) = STA. 333+50 (Ah)					
Subtotal Length			11715		
x 2 (Inside + Outside)				23430	
On Centerline					11715
WESTBOUND					
781+22	**To**	**897+98**	11676		
Station Equation: STA. 897+98.26 (Bk) = STA. 333+50 (Ah)					
Subtotal Length			11676		
x 2 (Inside + Outside)				23352	
On Centerline					11676
EASTBOUND + WESTBOUND					
333+50	**To**	**343+65**	1015		
Station Equation: STA. 343+65.05 (Bk) = STA. 344+67.08 (Ah)					
344+67	**To**	**363+90**	1923		
Subtotal Length			2938		
x 4 (EB x 2, WB x 2)				11752	
x 2 (EB CL, WB CL)					5876
Deduct Main St. Ramp Gores + Tapers				-1498	
Deduct Structures				-1278	-1278
Knox County Subtotal				**55758**	**27989**
Grand Total				**148641**	**76333**

RESURFACING TABLE (1 of 2)															
LOCATION			Mainline Length	Mainline Width	Mainline Area	Polymerized Bituminous Material Tack Coat	Poly HMA S. Cse Mix D, N70 1.75"	Poly HMA Bndr Cse IL-9.5 N70 2"	Poly HMA Bndr Cse IL-9.5 N70 1"	Poly Lvl Bndr (M M) IL-4.75 N50 1" (see Note)	HMA Shoulder 6.25"	HMA Shoulder 1.75" Pave Wide	HMA Surface Removal (Variable Depth)	Agg. Shoulder Type B	Material Transfer Device
			Feet	Feet	Sq.Yd	Pound	Ton	Ton	Ton	Ton	Ton	Ton	Sq. Yd	Ton	Ton
WARREN COUNTY (RURAL)															
Eastbound US 34 - Mainline															
542+70	**To**	**712+50**	16980	24	45280	48902.4	4437.4	5071.4	0	0	0		0	0	9508.8
Station Equation: STA. 712+50 (Bk) = STA. 710+00 (Ah)															
710+00	**To**	**779+40**	6940	24	18507	19987.2	1813.7	2072.8	0	0	0		0	0	3886.5
Pavement Transition & Overlay Under Structure Warren / Knox County Line															
779+40	**To**	**780+10**	70	24	187	201.6	18.3	15.7	0	0	0		0	0	34.0
780+10	**To**	**781+22**	112	24	299	322.6	29.3	0	16.7	0	0		0	0	46.0
Eastbound US 34 - Shoulders															
See Shoulder Resurfacing Quantities						45923.9	0	0	0	0	14334.5		40228.4	2663.9	8838.9
Westbound US 34															
542+70	**To**	**712+50**	16980	24	45280	48902.4	4437.4	5071.4	0	0	0		0	0	9508.8
Station Equation: STA. 712+50 (Bk) = STA. 710+00 (Ah)															
710+00	**To**	**779+83**	6983	24	18621	20111	1824.9	2085.6	0	0	0		0	0	3910.5
Pavement Transition & Overlay Under Structure Warren / Knox County Line															
779+83	**To**	**780+53**	70	24	187	201.6	18.3	15.7	0	0	0		0	0	34.0
780+53	**To**	**781+22**	69	24	184	198.7	18	0	10.3	0	0		0	0	28.3
Westbound US 34 - Shoulders															
See Shoulder Resurfacing Quantities						46008	0	0	0	0	14375.5		40352.4	2635.7	8882.3
MEDIAN CROSSOVERS															
See Shoulder Resurfacing Quantities						329.1	0	0	0	0	2.4		0	10.8	0
Cameron Road Interchange															
Ramp A: Sta. 0+00 to 4+00			400	Var	520	561.6	51	58.2	0	0	0		0	0	109.2
Ramp A: Sta. 4+00 to 6+56			256	16	455	491.5	44.6	51	0	0	0		0	0	95.6
Ramp A: Sta. 6+56 to 18+49			1193	16	2121	2290.6	207.9	0	0	119.9	0		0	0	327.8
Ramp B: Sta. 1+42 to 7+07			565	16	1004	1084.8	98.4	0	0	57.3	0		0	0	155.7
Ramp B: Sta. 7+07 to 10+15			308	16	548	591.4	53.7	61.4	0	0	0		0	0	115.1
Ramp B: Sta. 10+15 to 19+64			949	Var	1107.9	1196.5	108.6	124.1	0	0	0		0	0	232.7
Ramp C: Sta. 0+00 to 4+00			400	Var	524.4	566.4	51.4	58.7	0	0	0		0	0	110.1
Ramp C: Sta. 4+00 to 6+56			256	16	455	491.5	44.6	51	0	0	0		0	0	95.6
Ramp C: Sta. 6+56 to 17+94			1138	16	2023	2185	198.3	0	0	114.4	0		0	0	312.7
Ramp D: Sta. 1+02 to 10+63			961	16	1708	1845.1	167.4	0	0	96.8	0		0	0	264.2
Ramp D: Sta. 10+63 to 13+43			280	16	498	537.6	48.8	55.8	0	0	0		0	0	104.6
Ramp D: Sta. 13+43 to 22+93			950	Var	1131.8	1222.3	110.9	126.8	0	0	0		0	0	237.7
Cameron Road Interchange - Shoulders															
See Shoulder Resurfacing Quantities						7429.6	0	0	0	0	2407.8		6879.3	662	0.0
See Tack Coat Centerline Joint Filling Quantities						9281	0	0	0	0	0		0	0	0
Sub-Total (Warren)						**268293**	**13783**	**14947**		**388**	**31120**		**87460**	**5972**	**46839**

RESURFACING QUANTITIES (SHEET 1 OF 2)

STRUCTURE OMISSIONS
(EB US 34) STA 894+29 TO 896+31
(EB US 34) STA 350+15 TO 351+95
(WB US 34) STA 892+42 TO 894+83
(WB US 34) STA 350+29 TO 352+15
(MAIN ST RAMP C) STA 21+09 TO 23+50
(MAIN ST RAMP D) STA 0+00 TO 1+44

Note about Poly Lvl Bndr (MM) IL-4.75 N50:
Binder is 1" thick on ramps, then transistions in thickness from 1" (on ramp) to 2" (at gore).
The transition length is 40 feet.
(Additional binder quantities are included in totals)
Stations for transitions are as follow:
Cameron Interchange
Ramp A Sta 6+56 to 6+96
Ramp B Sta 6+67 to 7+07
Ramp C Sta 6+56 to 6+96
Ramp D Sta 10+23 to 10+63
Main St. Interchange
Ramp C Sta 13+46 to 13+86
Ramp D Sta 6+15 to 6+45

RESURFACING QUANTITIES (SHEET 2 OF 2)

RESURFACING TABLE (1 of 2)															
LOCATION			Mainline Length	Mainline Width	Mainline Area	Polymerized Bituminous Material Tack Coat	Poly HMA S. Cse Mix D, N70 1.75"	Poly HMA Bndr Cse IL-9.5 N70 2"	Poly HMA Bndr Cse IL-9.5 N70 1"	Poly Lvl Bndr (M M) IL-4.75 N50 1" (see Note)	HMA Shoulder 6.25"	HMA Shoulder 1.75" Pave Wide	HMA Surface Removal (Variable Depth)	Agg. Shoulder Type B	Material Transfer Device
			Feet	Feet	Sq.Yd	Pound	Ton	Ton	Ton	Ton	Ton	Ton	Sq. Yd	Ton	Ton
WARREN COUNTY (RURAL)															
Eastbound US 34 - Mainline															
542+70	**To**	**712+50**	16980	24	45280	48902.4	4437.4	5071.4	0	0	0		0	0	9508.8
Station Equation: STA. 712+50 (Bk) = STA. 710+00 (Ah)															
710+00	**To**	**779+40**	6940	24	18507	19987.2	1813.7	2072.8	0	0	0		0	0	3886.5
Pavement Transition & Overlay Under Structure Warren / Knox County Line															
779+40	**To**	**780+10**	70	24	187	201.6	18.3	15.7	0	0	0		0	0	34.0
780+10	**To**	**781+22**	112	24	299	322.6	29.3	0	16.7	0	0		0	0	46.0
Eastbound US 34 - Shoulders															
See Shoulder Resurfacing Quantities						674.4	0	0	0	0	218.5		624.4	32	218.5
Westbound US 34															
542+70	**To**	**712+50**	16980	24	45280	48902.4	4437.4	5071.4	0	0	0		0	0	9508.8
Station Equation: STA. 712+50 (Bk) = STA. 710+00 (Ah)															
710+00	**To**	**779+83**	6983	24	18621	20111	1824.9	2085.6	0	0	0		0	0	3910.5
Pavement Transition & Overlay Under Structure Warren / Knox County Line															
779+83	**To**	**780+53**	70	24	187	201.6	18.3	15.7	0	0	0		0	0	34.0
780+53	**To**	**781+22**	69	24	184	198.7	18	0	10.3	0	0		0	0	28.3
Westbound US 34 - Shoulders															
See Shoulder Resurfacing Quantities						674.4	0	0	0	0	218.5		624.4	32	218.5
MEDIAN CROSSOVERS															
See Shoulder Resurfacing Quantities						2332.1	0	0	0	0	2.4		0	184.4	0
Cameron Road Interchange															
Ramp A: Sta. 0+00 to 4+00			400	Var	520	561.6	51	58.2	0	0	0		0	0	109.2
Ramp A: Sta. 4+00 to 6+56			256	16	455	491.5	44.6	51	0	0	0		0	0	95.6
Ramp A: Sta. 6+56 to 18+49			1193	16	2121	2290.6	207.9	0	0	119.9	0		0	0	327.8
Ramp B: Sta. 1+42 to 7+07			565	16	1004	1084.8	98.4	0	0	57.3	0		0	0	155.7
Ramp B: Sta. 7+07 to 10+15			308	16	548	591.4	53.7	61.4	0	0	0		0	0	115.1
Ramp B: Sta. 10+15 to 19+64			949	Var	1107.9	1196.5	108.6	124.1	0	0	0		0	0	232.7
Ramp C: Sta. 0+00 to 4+00			400	Var	524.4	566.4	51.4	58.7	0	0	0		0	0	110.1
Ramp C: Sta. 4+00 to 6+56			256	16	455	491.5	44.6	51	0	0	0		0	0	95.6
Ramp C: Sta. 6+56 to 17+94			1138	16	2023	2185	198.3	0	0	114.4	0		0	0	312.7
Ramp D: Sta. 1+02 to 10+63			961	16	1708	1845.1	167.4	0	0	96.8	0		0	0	264.2
Ramp D: Sta. 10+63 to 13+43			280	16	498	537.6	48.8	55.8	0	0	0		0	0	104.6
Ramp D: Sta. 13+43 to 22+93			950	Var	1131.8	1222.3	110.9	126.8	0	0	0		0	0	237.7
Cameron Road Interchange - Shoulders															
See Shoulder Resurfacing Quantities						318	0	0	0	0	102.1		289.3	3.6	0.0
See Tack Coat Centerline Joint Filling Quantities						9281	0	0	0	0	0		0	0	0
Sub-Total (Warren)						**165490**	**13783**	**14947**		**388**	**542**		**1538**	**252**	**29555**
Ramp D: Sta. 6+15 to 21+00			1485	16	2640	2851.2	258.7	0	0	149	0		0	0	407.7
IL 164 (W. Main Street) Interchange - Shoulders															
See Shoulder Resurfacing Quantities						4610.7	0.0	0.0	0.0	0.0	1494.3		4269.0	426.1	0.0
See Tack Coat Centerline Joint Filling Quantities						5885	0.0	0.0	0.0	0.0	0.0		0.0	0.0	0.0
Sub-Total (Knox)						**272820**	**20947**	**22477**		**709**	**2578**		**7345**	**930**	**45007**
GRAND TOTAL						**541113**	**34730**	**37424**		**1097**	**33698**		**94805**	**6902**	**91846**

STRUCTURE OMISSIONS
(EB US 34) STA 894+29 TO 896+31
(EB US 34) STA 350+15 TO 351+95
(WB US 34) STA 892+42 TO 894+83
(WB US 34) STA 350+29 TO 352+15
(MAIN ST RAMP C) STA 21+09 TO 23+50
(MAIN ST RAMP D) STA 0+00 TO 1+44

Note about Poly Lvl Bndr (MM) IL-4.75 N50:
Binder is 1" thick on ramps, then transistions in thickness from 1" (on ramp) to 2" (at gore).
The transition length is 40 feet.
(Additional binder quantities are included in totals)
Stations for transitions are as follow:
Cameron Interchange
Ramp A Sta 6+56 to 6+96
Ramp B Sta 6+67 to 7+07
Ramp C Sta 6+56 to 6+96
Ramp D Sta 10+23 to 10+63
Main St. Interchange
Ramp C Sta 13+46 to 13+86
Ramp D Sta 6+15 to 6+45

SHOULDER RESURFACING QUANTITIES (1 of 2)

LOCATION (Sta. to Sta.)			Location	Comments	Shoulder Length	Shoulder Width	Shoudler Area	Polymerized Bituminous Materials (Tack Coat) Shoulder	Polymerized Bituminous Materials (Tack Coat) Pave Wide	HMA Shoulder 6.25"	HMA Shoulder 1.75" Pave Wide	HMA Surface Removal (Variable Depth)	Agg. Shoulder Ty B	Material Transfer Device
					Feet	Feet	Sq.Yd	Pound	Pound	Ton	Ton	Sq. Yd	Ton	Ton
WARREN COUNTY (RURAL)														
542+00	To	544+43	EB Outside	Start Project	243	10	270	291.6	9.7	94.5	1.3	270	13.8	94.5
548+43	To	551+00	EB Outside	Ramp C Gore	257	Var	318.5	344	10.3	111.5	1.4	318.5	14.6	111.5
551+00	To	573+89	EB Outside		2289	10	2543.3	2746.8	91.6	890.2	12.5	2543.3	130.3	890.2
573+89	To	576+64	EB Outside	Ramp D Gore	275	Var	258.6	279.3	11	90.5	1.5	258.6	15.7	90.5
586+20	To	587+95	EB Outside		175	10	194.4	210	7	68	1.0	194.4	10	68
587+95	To	588+70	EB Outside	Rem / Repl	75	10	83.3	30	3	0	0.4	0	4.3	0
588+70	To	712+50	EB Outside		12380	10	13755.6	14856	495.2	4814.5	67.4	13755.6	705	4814.5
Station Equation: STA. 712+50 (Bk) = STA. 710+00 (Ah)														
710+00	To	781+22	EB Outside	End County Line	7122	10	7913.3	8546.4	284.9	2769.7	38.8	7913.3	405.6	2769.7
542+00	To	597+00	EB Inside	Start Project	5500	6	3666.7	3960	220	1283.3	29.9	3666.7	313.2	0
597+00	To	602+00	EB Inside	Rem / Repl	500	Var	533.3	192	20	0	2.7	0	28.5	0
602+70	To	702+31	EB Inside		9961	6	6640.7	7171.9	398.4	2324.2	54.2	6640.7	567.2	0
702+31	To	707+31	EB Inside	Rem / Repl	500	Var	533.3	192	20	0	2.7	0	28.5	0
708+01	To	712+50	EB Inside		449	6	299.3	323.3	18	104.8	2.4	299.3	25.6	0
Station Equation: STA. 712+50 (Bk) = STA. 710+00 (Ah)														
710+00	To	765+00	EB Inside		5500	6	3666.7	3960	220	1283.3	29.9	3666.7	313.2	0
765+00	To	770+00	EB Inside	Rem / Repl	500	Var	533.3	192	20	0	2.7	0	28.5	0
770+70	To	781+22	EB Inside	End County Line	1052	6	701.3	757.4	42.1	245.5	5.7	701.3	59.9	0
Eastbound Shoulders Subtotals								**45923.9**		**14334.5**		**40228.4**	**2663.9**	**8838.9**
542+00	To	543+63	WB Outside	Start Project	163	10	181.1	195.6	6.5	63.4	0.9	181.1	9.3	63.4
553+13	To	556+23	WB Outside	Ramp B Gore	310	Var	276.2	298.3	12.4	96.7	1.7	276.2	17.7	96.7
556+23	To	575+06	WB Outside		1883	10	2092.2	2259.6	75.3	732.3	10.3	2092.2	107.2	732.3
575+06	To	577+63	WB Outside	Ramp A Gore	257	Var	373.8	403.7	10.3	130.8	1.4	373.8	14.6	130.8
581+63	To	712+50	WB Outside		13087	10	14541.1	15704.4	523.5	5089.4	71.3	14541.1	745.2	5089.4
Station Equation: STA. 712+50 (Bk) = STA. 710+00 (Ah)														
710+00	To	781+22	WB Outside	End County Line	7122	10	7913.3	8546.4	284.9	2769.7	38.8	7913.3	405.6	2769.7
542+00	To	602+00	WB Inside	Start Project	6000	6	4000	4320	240	1400	32.7	4000	341.7	0
602+70	To	607+70	WB Inside	Rem / Repl	500	Var	533.3	192	20	0	2.7	0	28.5	0
607+70	To	707+31	WB Inside		9961	6	6640.7	7171.9	398.4	2324.2	54.2	6640.7	567.2	0
708+01	To	712+50	WB Inside	Rem / Repl	449	Var	533.3	192	18	0	2.4	0	25.6	0
Station Equation: STA. 712+50 (Bk) = STA. 710+00 (Ah)														
710+00	To	710+51	WB Inside	Rem / Repl	51	Var	533.3	192	2	0	0.3	0	2.9	0
710+51	To	770+00	WB Inside		5949	6	3966	4283.3	238	1388.1	32.4	3966	338.8	0
775+70	To	781+22	WB Inside	End County Line	552	6	368	397.4	22.1	128.8	3.0	368	31.4	0
Westbound Shoulders Subtotals								**46008**		**14375.5**		**40352.4**	**2635.7**	**8882.3**
602+00	To	602+70	Med Xover	Rem / Repl	Var	Var	289.3	104.1	5.6	0	0.8	0	3.6	0
707+31	To	708+01	Med Xover	Rem / Repl	Var	Var	289.3	104.1	5.6	0	0.8	0	3.6	0
770+00	To	770+70	Med Xover	Rem / Repl	Var	Var	289.3	104.1	5.6	0	0.8	0	3.6	0
Median Crossovers Subtotals								**329.1**		**2.4**		**0**	**10.8**	**0**
Ramp A: Sta. 0+00 to 6+56			Ramp Outside		656	6	437.3	472.3	0	153.1	0	437.3	37.4	0
Ramp A: Sta. 6+56 to 18+49			Ramp In & Out		1193	10	1325.6	1431.6	0	464	0	1325.6	135.8	0
Ramp B: Sta. 1+42 to 7+07			Ramp In & Out		565	10	627.8	678	0	219.7	0	627.8	64.4	0
Ramp B: Sta. 7+07 to 19+64			Ramp Outside		1257	6	838	905	0	293.3	0	838	71.6	0
Ramp C: Sta. 0+00 to 6+57			Ramp Outside		657	6	438	473	0	153.3	0	438	37.4	0
Ramp C: Sta. 6+57 to 18+49			Ramp In & Out		1192	10	1324.4	1430.4	0	463.5	0	1324.4	135.8	0
Ramp D: Sta. 1+02 to 10+64			Ramp In & Out		962	10	1068.9	1154.4	0	374.1	0	1068.9	109.6	0
Ramp D: Sta. 10+64 to 22+93			Ramp Outside		1229	6	819.3	884.9	0	286.8	0	819.3	70	0
Cameron Road Interchange Ramp Shoulders Subtotals								**7429.6**		**2407.8**		**6879.3**	**662**	**0**
Warren County Subtotals								**99690.6**		**31120.2**		**87460.1**	**5972.4**	**17721.2**

SHOULDER RESURFACING QUANTITIES (SHEET 1 OF 2)
NOTE:
TOTALS INCLUDED IN RESURFACING TABLES

STRUCTURE OMISSIONS
(EB US 34) STA 894+29 TO 896+31
(EB US 34) STA 350+15 TO 351+95
(WB US 34) STA 892+42 TO 894+83
(WB US 34) STA 350+29 TO 352+15
(MAIN ST RAMP C) STA 21+09 TO 23+50
(MAIN ST RAMP D) STA 0+00 TO 1+44

SHOULDER RESURFACING QUANTITIES (2 of 2)

LOCATION (Sta. to Sta.)			Location	Comments	Shoulder Length	Shoulder Width	Shoudler Area	Polymerized Bituminous Materials (Tack Coat) Shoulder	Polymerized Bituminous Materials (Tack Coat) Pave Wide	HMA Shoulder 6.25"	HMA Shoulder 1.75" Pave Wide	HMA Surface Removal (Variable Depth)	Agg. Shoulder Ty B	Material Transfer Device
					Feet	Feet	Sq.Yd	Pound	Pound	Ton	Ton	Sq. Yd	Ton	Ton
KNOX COUNTY (URBAN)														
781+22	To	894+29	EB Outside	Start County Line	11307	10	12563.3	13568.4	452.3	4397.2	61.6	12563.3	643.9	4397.2
898+42	To	898+97	EB Outside	Ramp D Gore	55	Var	35.1	37.9	2.2	12.3	0.3	35.1	3.1	12.3
Station Equation: STA. 898+97.38 (Bk) = STA. 333+50 (Ah)														
333+50	To	335+48	EB Outside	Ramp D Gore	198	Var	274.3	296.2	7.9	96	1.1	274.3	11.3	96
335+48	To	343+65	EB Outside		817	10	907.8	980.4	32.7	317.7	4.4	907.8	46.5	317.7
Station Equation: STA. 343+65.05 (Bk) = STA. 344+67.08 (Ah)														
344+67	To	350+29	EB Outside		562	10	624.4	674.4	22.5	218.5	3.1	624.4	32	218.5
352+15	To	363+90	EB Outside	End Project	1175	10	1305.6	1410	47	457	6.4	1305.6	66.9	457
781+22	To	849+33	EB Inside	Start County Line	6811	6	4540.7	4903.9	272.4	1589.2	37.1	4540.7	387.8	0
849+33	To	854+33	EB Inside	Rem / Repl	500	Var	533.3	192	20	0	2.7	0	28.5	0
855+03	To	894+29	EB Inside		3926	6	2617.3	2826.7	157	916.1	21.4	2617.3	223.6	0
896+31	To	898+97	EB Inside		266	6	177.3	191.5	10.6	62.1	1.4	177.3	15.1	0
Station Equation: STA. 898+97.38 (Bk) = STA. 333+50 (Ah)														
333+50	To	343+65	EB Inside		1015	6	676.7	730.8	40.6	236.8	5.5	676.7	57.8	0
Station Equation: STA. 343+65.05 (Bk) = STA. 344+67.08 (Ah)														
344+67	To	363+90	EB Inside	End Project	1923	6	1282	1384.6	76.9	448.7	10.5	1282	109.5	0
Eastbound Shoulders Subtotals								**28338.9**		**8907.1**		**25004.5**	**1626**	**5498.7**
781+22	To	890+82	WB Outside	Start County Line	10960	10	12177.8	13152	438.4	4262.2	59.7	12177.8	624.1	4262.2
Station Equation: STA. 897+98.26 (Bk) = STA. 333+50 (Ah)														
335+42	To	337+54	WB Outside	Ramp C Gore	212	Var	183.6	198.2	8.5	64.3	1.2	183.6	12.1	64.3
337+54	To	343+65	WB Outside		611	10	678.9	733.2	24.4	237.6	3.3	678.9	34.8	237.6
Station Equation: STA. 343+65.05 (Bk) = STA. 344+67.08 (Ah)														
344+67	To	350+29	WB Outside		562	10	624.4	674.4	22.5	218.5	3.1	624.4	32	218.5
352+15	To	363+90	WB Outside	End Project	1175	10	1305.6	1410	47	457	6.4	1305.6	66.9	457
781+22	To	854+33	WB Inside	Start County Line	7311	6	4874	5263.9	292.4	1705.9	39.8	4874	416.3	0
855+03	To	860+03	WB Inside	Rem / Repl	500	Var	533.3	192	20	0	2.7	0	28.5	0
860+03	To	892+42	WB Inside		3239	6	2159.3	2332.1	129.6	755.8	17.6	2159.3	184.4	0
894+83	To	897+98	WB Inside		315	6	210	226.8	12.6	73.5	1.7	210	17.9	0
Station Equation: STA. 897+98.26 (Bk) = STA. 333+50 (Ah)														
333+50	To	343+65	WB Inside		1015	6	676.7	730.8	40.6	236.8	5.5	676.7	57.8	0
Station Equation: STA. 343+65.05 (Bk) = STA. 344+67.08 (Ah)														
344+67	To	350+29	WB Inside		562	6	374.7	404.6	22.5	131.1	3.1	374.7	32	0
352+15	To	363+90	WB Inside	End Project	1175	6	783.3	846	47	274.2	6.4	783.3	66.9	0
Westbound Shoulders Subtotals								**27269.5**		**8567.4**		**24048.3**	**1573.7**	**5239.6**
854+33	To	855+03	Med Xover		Var	Var	289.3	312.4	5.6	101.3	0.8	289.3	3.6	0
Median Crossovers Subtotals								**318**		**102.1**		**289.3**	**3.6**	**0**
Ramp C: Sta. 1+00 to 15+94			Ramp In & Out		1494	10	1660	1792.8	0	581	0	1660	170.2	0
Ramp C: Sta. 15+94 to 21+09			Ramp Outside		515	6	343.3	370.8	0	120.2	0	343.3	29.3	0
Ramp C: Sta. 23+50 to 25+48			Ramp Outside		284	6	189.3	204.5	0	66.3	0	189.3	16.2	0
Ramp D: Sta. 1+44 to 3+62			Ramp Outside		218	6	145.3	157	0	50.9	0	145.3	12.4	0
Ramp D: Sta. 3+62 to 21+00			Ramp In & Out		1738	10	1931.1	2085.6	0	675.9	0	1931.1	198	0
IL 164 (W. Main Street) Interchange Ramp Shoulders Subtotals								**4610.7**		**1494.3**		**4269**	**426.1**	**0**
Knox County Subtotals								**60537.1**		**19070.9**		**53611.1**	**3629.4**	**10738.3**
Grand Total								**160228**		**50191**		**141071**	**9602**	**28460**

SHOULDER RESURFACING QUANTITIES (SHEET 2 OF 2)
NOTE:
TOTALS INCLUDED IN RESURFACING TABLES

STRUCTURE OMISSIONS
(EB US 34) STA 894+29 TO 896+31
(EB US 34) STA 350+15 TO 351+95
(WB US 34) STA 892+42 TO 894+83
(WB US 34) STA 350+29 TO 352+15
(MAIN ST RAMP C) STA 21+09 TO 23+50
(MAIN ST RAMP D) STA 0+00 TO 1+44

SHOULDER REMOVAL AND REPLACEMENT QUANTITIES

LOCATION			Shoulder Location	Shoulder Length	Prop. Shoulder Width	Shoulder Area	Sub-base Granular Material Type A, 4"	Polymerized Bituminous Materials (Prime Coat)	Earth Excavation Widening	Paved Shoulder Removal	HMA Shoulder 9"
				Feet	Feet	Sq.Yd	Sq Yd	Pound	Cu. Yd	Sq. Yd	Sq. Yd
WARREN COUNTY (RURAL)											
Shoulder Removal and Replacement - Mainline											
587+95	To	588+70	EB Outside	75	10	83.3	83.3	188	0	83.3	83.3
Shoulder Removal and Replacement - Median Crossovers											
597+00	To	598+00	EB Inside	100	6 to 10	88.9	88.9	200	5.6	66.7	88.9
598+00	To	602+00	EB Inside	400	10	444.4	444.4	1000	44.4	266.7	444.4
602+00	To	602+70	Crossover	70	Var	289.3	289.3	651	0	289.3	289.3
602+70	To	606+70	WB Inside	400	10	444.4	444.4	1000	44.4	266.7	444.4
606+70	To	607+70	WB Inside	100	10 to 6	88.9	88.9	200	5.6	66.7	88.9
702+31	To	703+31	EB Inside	100	6 to 10	88.9	88.9	200	5.6	66.7	88.9
703+31	To	707+31	EB Inside	400	10	444.4	444.4	1000	44.4	266.7	444.4
707+31	To	708+01	Crossover	70	Var	289.3	289.3	651	0	289.3	289.3
708+01	To	712+01	WB Inside	400	10	444.4	444.4	1000	44.4	266.7	444.4
712+01	To	712+50	WB Inside	49	10 to 6	43.6	43.6	98	2.7	32.7	43.6
Station Equation: STA. 712+50 (Bk) = STA. 710+00 (Ah)											
710+00	To	710+51	WB Inside	51	10 to 6	45.3	45.3	102	2.8	34	45.3
765+00	To	766+00	EB Inside	100	6 to 10	88.9	88.9	200	5.6	66.7	88.9
766+00	To	770+00	EB Inside	400	10	444.4	444.4	1000	44.4	266.7	444.4
770+00	To	770+70	Crossover	70	Var	289.3	289.3	651	0	289.3	289.3
770+70	To	774+70	WB Inside	400	10	444.4	444.4	1000	44.4	266.7	444.4
774+70	To	775+70	WB Inside	100	10 to 6	88.9	88.9	200	5.6	66.7	88.9
Warren County Subtotals							**4151**	**9341**	**300**	**2952**	**4151**
KNOX COUNTY (URBAN)											
Shoulder Removal and Replacement - Median Crossovers											
849+33	To	850+33	EB Inside	100	6 to 10	88.9	88.9	200	5.6	66.7	88.9
850+33	To	854+33	EB Inside	400	10	444.4	444.4	1000	44.4	266.7	444.4
854+33	To	855+03	Crossover	**Crossover to be Resurfaced - No Removal / Replacement Quantities**							
855+03	To	859+03	WB Inside	400	10	444.4	444.4	1000	44.4	266.7	444.4
859+03	To	860+03	WB Inside	100	10 to 6	88.9	88.9	200	5.6	66.7	88.9
Knox County Subtotals							**1067**	**2400**	**100**	**667**	**1067**
Grand Totals							**5218**	**11741**	**400**	**3619**	**5218**

GROOVING FOR RECESSED PAVEMENT MARKING

LOCATION	5" FT	7" FT	9" FT	25" FT	LETTERS & SYMBOLS SQ. FT
WARREN COUNTY					
US 34 / IL 110	96,888	12,112			
CAMERON RD. RAMP A	4,400		494	38	43
CAMERON RD. RAMP B	4,200		278		
CAMERON RD. RAMP C	4,400		546	38	43
CAMERON RD. RAMP D	4,400		310		
SUBTOTAL	17,400		1,628	76	86
WARREN COUNTY TOTAL	114,288	12,112	1,628	76	86
KNOX COUNTY					
US 34 / IL 110	58,892	7,362			
MAIN ST. RAMP C	5,100		298	38	43
MAIN ST. RAMP D	4,200		688		
SUBTOTAL	9,300	7,362	986	38	43
KNOX COUNTY TOTAL	68,192	7,362	986	38	43
GRAND TOTAL	182,480	19,474	2,614	114	129

CLASS A PATCHES

			9 INCH				11 INCH	
LOCATION	SAW CUTS	TIE BARS	TYPE I	TYPE II	TYPE III	TYPE IV	TYPE IV	PATCH. REINF.
UNIT	FT	EA	SQ. YD	SQ. YD	SQ. YD	SQ. YD	SQ. YD	SQ. YD
1 - EB LANES START OF PROJECT TO 165TH ST. OVERPASS	2502	45	4	310	115	27	187	642
1 - WB LANES START OF PROJECT TO 165TH ST. OVERPASS	2148	35	12	268	91	0	187	557
2 - EB LANES 165TH ST. OVERPASS TO COUNTY LINE	604	12	4	79	0	32	0	115
2 - WB LANES 165TH ST. OVERPASS TO COUNTY LINE	544	0	0	63	36	0	0	99
WARREN COUNTY SUBTOTALS	**5798**	**92**	**20**	**720**	**242**	**59**	**374**	**1413**
3 - EB LANES COUNTY LINE TO END OF PROJECT	1044	0	4	159	24	0	0	187
3 - WB LANES COUNTY LINE TO END OF PROJECT	304	0	0	59	0	0	0	59
KNOX COUNTY SUBTOTALS	**1348**	**0**	**4**	**218**	**24**	**0**	**0**	**246**
GRAND TOTALS	**7146**	**92**	**24**	**938**	**266**	**59**	**374**	**1659**

GUARDRAIL & TERMINALS (SHEET 1 OF 2)

GUARDRAIL, TRAFFIC BARRIER TERMINALS AND AGGREGATE EROSION CONTROL				GUARDRAIL		TRAFFIC BARRIER TERMINALS					GUARDRAIL AGGREGATE EROSION CONTROL
				SPBGR TYPE A 6 FT POSTS	GUARDRAIL REFLECTOR TYPE A	TYPE 1 SPECIAL TANGENT	TYPE 1 MARKER DA	TYPE 2	TYPE 5	TYPE 6	
				FOOT	EACH	EACH	EACH	EACH	EACH	EACH	TON
WARREN COUNTY											
140th STREET-CAMERON RD.											
EB	560+13	TO	560+63			1	1				12.9
	560+63	TO	563+00	237.5	2						51.1
	563+00	TO	563+13					1			2.7
WB	563+20	TO	563+32					1			2.7
	563+32	TO	565+70	237.5	2						51.1
	565+70	TO	566+20			1	1				12.9
150th STREET											
EB	612+05	TO	612+55			1	1				12.9
	612+55	TO	621+05	850.0	8						183
	621+05	TO	621+18					1			2.7
WB	613+03	TO	613+15					1			2.7
	613+15	TO	621+40	825.0	8						177.7
	621+40	TO	621+90			1	1				12.9
165th STREET											
EB	700+06	TO	700+56			1	1				12.9
	700+56	TO	702+56	200.0	2						43.1
	702+56	TO	702+69					1			2.7
WB	703+20	TO	703+32					1			2.7
	703+32	TO	705+32	200.0	2						43.1
	705+32	TO	705+82			1	1				12.9
180th STREET-KNOX CO. LINE											
EB	778+35	TO	778+85			1	1				12.9
	778+85	TO	780+85	200.0	2						43.1
	780+85	TO	780+98					1			2.7
WARREN COUNTY TOTAL				2750.0	26	7	7	7	0	0	701

GUARDRAIL REMOVAL				
WARREN COUNTY				FT
140th STREET-CAMERON RD.				
E.B	558+80	TO	563+10	430
W.B	562+95	TO	567+20	425
150th STREET				
E.B	612+34	TO	621+13	879
W.B	611+75	TO	625+00	1,325
165th STREET				
E.B	698+85	TO	702+85	400
W.B	703+02	TO	706+77	375
180th STREET-KNOX CO. LINE				
E.B	777+35	TO	781+10	375
WARREN COUNTY TOTAL				4,209
KNOX COUNTY				FT
US 34 @ MAIN STREET IL 164				
E.B. (Outside)	352+10	TO	353+10	100
E.B. (Median)	346+10	TO	350+10	400
E.B. (Outside)	346+10	TO	350+20	410
W.B. (Median)	351+60	TO	355+70	410
W.B. (Outside)	351+75	TO	355+70	395
W.B. (Outside)	349+20	TO	349+75	55
CEDAR CREEK				
E.B. (Outside)	889+84	TO	893+84	402
E.B.(Median)	891+23	TO	893+58	205
W.B. (Outside)	894+56	TO	334+38	421
W.B. (Median)	894+86	TO	896+51	165
180th STREET-KNOX CO. LINE				
W.B	781+22	TO	785+30	408
KNOX COUNTY TOTAL				3,371
GRAND TOTAL				7,580

GUARDRAIL & TERMINALS (SHEET 2 OF 2)

GUARDRAIL, TRAFFIC BARRIER TERMINALS AND AGGREGATE EROSION CONTROL				GUARDRAIL		TRAFFIC BARRIER TERMINALS					GUARDRAIL AGGREGATE EROSION CONTROL
				SPBGR TYPE A 6 FT POSTS	GUARDRAIL REFLECTOR TYPE A	TYPE 1 SPECIAL TANGENT	TYPE 1 MARKER DA	TYPE 2	TYPE 5	TYPE 6	
				FOOT	EACH	EACH	EACH	EACH	EACH	EACH	TON
KNOX COUNTY											
MAIN STREET IL 164											
EB (Median)	347+25	TO	347+75			1	1				12.9
	347+75	TO	349+63	187.5	2						40.4
	349+63	TO	350+00							1	8.1
EB (Outside)	347+83	TO	348+33			1	1				12.9
	348+33	TO	349+70	137.5	2						29.6
	349+70	TO	350+08							1	8.1
EB (Outside)	352+10	TO	352+23						1		2.8
	352+23	TO	354+23	200.0	2						43.1
	354+23	TO	354+36					1			2.7
WB (Median)	351+70	TO	352+08							1	8.1
	352+08	TO	353+95	187.5	2						40.4
	353+95	TO	354+45			1	1				12.9
WB (Outside)	351+85	TO	352+23							1	8.1
	352+23	TO	353+60	137.5	2						29.6
	353+60	TO	354+10			1	1				12.9
WB (Outside)	347+50	TO	347+62					1			2.7
	347+62	TO	349+62	200.0	2						43.1
	349+62	TO	349+75						1		2.8
CEDAR CREEK											
EB (Median)	896+66	TO	897+16			1	1				12.9
	897+16	TO	333+56	187.5	2						40.4
	333+56	TO	333+93							1	7.9
EB (Outside)	897+28	TO	897+78			1	1				12.9
	897+78	TO	333+81	150.0	2						32.3
	333+81	TO	334+18							1	7.9
WB (Median)	896+73	TO	897+10							1	8
	897+10	TO	334+50	187.5	2						40.4
	334+50	TO	335+00			1	1				12.9
WB (Outside)	334+51	TO	334+88							1	8
	334+88	TO	336+76	187.5	2						40.4
	336+76	TO	337+26			1	1				12.9
180th STREET-KNOX CO. LINE											
WB	781+45	TO	781+57					1			2.7
	781+57	TO	783+57	200.0	2						43.1
	783+57	TO	784+07			1	1				12.9
KNOX COUNTY TOTAL				1962.5	22	9	9	3	2	8	617
GRAND TOTAL				4713	48	16	16	10	2	8	1318

MOWING	
LOCATION	ACRES
WARREN COUNTY	57
KNOX COUNTY	36
TOTAL	93

INLETS TO BE ADJUSTED	
LOCATION	EACH
WARREN COUNTY	0
KNOX COUNTY (335+50 RAMP GORE AREA)	1
TOTAL	1

ENGINEERS FIELD OFFICE, TYPE A	
LOCATION	CAL. MO.
WARREN COUNTY	5.0
KNOX COUNTY	3.0
TOTAL	8

MOBILIZATION	
LOCATION	L SUM
WARREN COUNTY	0.6
KNOX COUNTY	0.4
TOTAL	1

RECOVERABLE DELINEATOR	
LOCATION	EACH
WARREN COUNTY	
602+35 MEDIAN X-OVER	4
707+66 MEDIAN X-OVER	4
770+35 MEDIAN X-OVER	4
WARREN COUNTY TOTAL	12
KNOX COUNTY	
854+68 MEDIAN X-OVER	4
KNOX COUNTY TOTAL	4
GRAND TOTAL	16

CONSTRUCTION STATION LAYOUT	
LOCATION	L SUM
WARREN COUNTY	0.6
KNOX COUNTY	0.4
TOTAL	1

TRAFFIC CONTROL & PROTECTION (SPECIAL) *	
LOCATION	L SUM
WARREN COUNTY	0.6
KNOX COUNTY	0.4
TOTAL	1

* FOR ROADWAY CLOSURE AND TRAFFIC DETOUR
SEE SPECIAL PROVISION

ENGINEER'S FIELD LABORATORY	
LOCATION	CAL. MO.
WARREN COUNTY	5.0
KNOX COUNTY	3.0
TOTAL	8

POLYUREA PAVEMENT MARKING TYPE II											Raised Reflective Pavement Marker	Raised Reflective Pavt Mkr Removal
Location			Length	LIne 4" White / Yellow	SKIP Dash 6" White	8"	24"	Letters & Symbols Arrows LT	RT	Through		
				Foot	Foot	Foot	Foot	Sq. Ft	Sq. Ft	Sq. Ft	Each	Each
WARREN COUNTY												
Eastbound US 34												
541+50.00	TO	712+50.00	17100	34200	4275						214	214
Station Equation 712+50 (Bk) = 710+00 (Ah)												
710+00	TO	781+22	7122	14244	1781						89	89
Westbound US 34												
Westbound US 34 - Contract 68339												
541+50.00	TO	712+50.00	17100	34200	4275						214	214
Station Equation 712+50 (Bk) = 710+00 (Ah)												
710+00	TO	781+22	7122	14244	1781						89	89
Cameron Ramps												
Ramp A			2200	4400		494	38	15.6	15.6	11.5		
Ramp B			2100	4200		278						
Ramp C			2200	4400		546	38	15.6	15.6	11.5		
Ramp D			2200	4400		310						
LETTERS & SYMBOLS SUBTOTAL								31.2	31.2	23		
WARREN COUNTY SUBTOTAL				***114288***	***12112***	***1628***	***76***		***86***		***606***	***606***
KNOX COUNTY												
Eastbound US 34												
781+22.00	TO	898+97.00	11775	23550	2944						147	147
EBL - Station Equation 898+97 = Sta. 898+55 (Bk) = Sta. 333+50 (Ah)												
333+50	TO	343+65	1015	2030	254						13	13
EBL - Station Equation 343+65 (BK) = Sta. 344+67 (Ah)												
344+67	TO	364+00	1933	3866	483							
Westbound US 34												
781+22.00	TO	898+97.00	11775	23550	2944						147	147
WBL - Station Equation 898+97 = Sta. 898+55 (Bk) = Sta. 333+50 (Ah)												
333+50	TO	343+65	1015	2030	254						13	13
WBL - Station Equation 343+65 (BK) = Sta. 344+67 (Ah)												
344+67	TO	364+00	1933	3866	483							
IL 164 - MAIN ST.												
Ramp C			2550	5100		298	38	15.6	15.6	11.5		
Ramp D			2100	4200		688						
LETTERS & SYMBOLS SUBTOTAL								15.6	15.6	11.5		
KNOX COUNTY SUBTOTAL				**68192**	**7362**	**986**	**38**		**43**		**320**	**320**
GRAND TOTAL				**182480**	**19474**	**2614**	**114**		**129**		**926**	**926**

US 34 CENTERLINE JOINT FILLING									
	MICRO-SURFACING AGGREGATE FOR CENTERLINE JOINT FILLING		MICRO-SURFACING EMULSIFIED ASPHALT FOR CENTERLINE JOINT FILLING		POLYMERIZED BITUMINOUS MATERIAL (TACK COAT)		CENTERLINE JOINT CLEANING	
TOTAL	TON		LBS		LBS		WARREN	KNOX
	WARREN	KNOX	WARREN	KNOX	WARREN	KNOX	FT	FT
	120	33	28708.9	7983.9	9280.8	5885.2	46404	29426
	153		**36,693**		**15,166**		**75830**	

Note: Polymerized Bituminous Materials (Tack Coat) total is included in the Resurfacing Tables

FILE NAME =	USER NAME = aubreyga	DESIGNED -	REVISED -
C:\Users\aubreyga\Desktop\68339\D468339-plans.dgn		DRAWN -	REVISED -
	PLOT SCALE = 200.0000 ' / in.	CHECKED -	REVISED -
Default	PLOT DATE = 12/15/2017	DATE -	REVISED -

STATE OF ILLINOIS
DEPARTMENT OF TRANSPORTATION

SCHEDULE OF QUANTITY

SCALE: | SHEET OF SHEETS | STA. TO STA.

FAP 313	SECTION	COUNTY	TOTAL SHEETS	SHEET NO.
	94(16,16-1,17)RS,48(17,18)RS	WARREN-KNOX	118	28
RTE US 34/IL 110		CONTRACT NO. 68339		
		ILLINOIS FED. AID PROJECT		

CLASS D PATCHES							
KNOX COUNTY							
LANE	STATION	NOTE	SIZE		AREA	9 INCH	
			LENGTH	WIDTH		TYPE III	TYPE III SPECIAL
			FOOT	FOOT	SQ YD	SQ. YD.	SQ. YD.
WARREN COUNTY TOTAL					0	0	0
WB	891+17.71	REPLACE WIDE FLANGE BEAM JOINT S OF SN # 048-0076	6	26.1	17.4		17.4
WB	891+48.21	REPLACE EXPANSION JOINT S OF SN # 048-0076	6	26.7	17.8	17.8	
EB	892+80.83	REPLACE WIDE FLANGE BEAM JOINT S OF SN # 048-0077	6	24	16.0		16.0
EB	893+11.33	REPLACE EXPANSION JOINT S OF SN # 048-0077	6	24	16.0	16.0	
WB	895+89.57	REPLACE EXPANSION JOINT N OF SN # 048-0076	6	34.6	23.1	23.1	
EB	897+12.15	REPLACE EXPANSION JOINT N OF SN # 048-0077	6	35.3	23.5	23.5	
WB	348+96.20	REPLACE EXPANSION JOINT S OF SN # 048-0073	6	24	16.0	16.0	
EB	349+11.35	REPLACE EXPANSION JOINT S OF SN # 048-0074	6	24	16.0	16.0	
WB	352+75.37	REPLACE EXPANSION JOINT N OF SN # 048-0073	6	24	16.0	16.0	
EB	352+96.35	REPLACE EXPANSION JOINT N OF SN # 048-0074	6	24	16.0	16.0	
WB	353+05.87	REPLACE WIDE FLANGE BEAM JOINT N OF SN # 048-0073	6	24	16.0		16.0
EB	353+25.85	REPLACE WIDE FLANGE BEAM JOINT N OF SN # 048-0074	6	24	16.0		16.0
KNOX COUNTY TOTAL					210	144	65
GRAND TOTAL					210	144	65

DRAINAGE QUANTITIES									
Location	Length	Width	Revetment Mat Removal	Grading & Shaping Ditches	Filter Fabric	Stone Dumped Rip Rap CL B3	Inlet to be Adjusted with New Median Inlet (604106)	Inlet to be Adjusted with New Frame & Grate (Special)	Pipe Culvert Removal
	FT	FT	SQ. YD	FT	SQ YD	TON	EACH	EACH	FT
WARREN COUNTY									
548+00			0	0	0	0	1	0	0
581+00	35	24	91.6	0	93.3	28	0	0	0
607+50	24	26	0	0	69.3	21	0	0	0
607+50	75	20	0	75	167	50	0	0	75
674+00			0	0	0	0	0	1	0
695+00	70	48	0	73	373.3	112	0	0	0
695+00	72	27	0	72	216	65	0	0	0
729+00	30	22	70.6	0	73.3	22	0	0	0
772+00	30	22	70.6	0	73.3	22	0	0	0
WARREN COUNTY SUBTOTALS			**232.7**	**220**	**1066**	**320**	**1**	**1**	**75**
KNOX COUNTY									
793+00	30	22	71.6	0	73.3	22	0	0	0
816+49	24	23	60.9	0	61.3	18	0	0	0
832+87	22	29	69.1	0	70.9	21	0	0	0
843+91	24	29	75.6	0	77.3	23	0	0	0
854+95	24	28	72.9	0	74.7	22	0	0	0
884+31	24	28	72.9	0	74.7	22	0	0	0
KNOX COUNTY SUBTOTALS			**422.9**	**0**	**432**	**130**	**0**	**0**	**0.0**
GRAND TOTALS			**656**	**220**	**1498**	**450**	**1**	**1**	**75**

VERTICAL CURVES AND ROADWAY PROFILE						
VPC	VPT	LOCATION	TYPE	G1 %	G2 %	L FT
US 34						
579+00	584+00	EB & WB	SAG	-0.72	1.00	500
633+50	638+50	EB & WB	CREST	1.00	0.46	500
660+25	671+25	EB & WB	CREST	0.46	-1.94	1150
692+50	697+50	EB & WB	SAG	-1.94	0.36	500
714+00	720+00	EB & WB	CREST	0.36	-0.30	600
727+00	732+00	EB & WB	CREST	-0.30	0.35	500
739+00	747+00	EB & WB	CREST	0.35	-0.35	800
752+00	758+00	EB & WB	CREST	-0.35	0.30	600
765+50	771+50	EB & WB	CREST	0.30	0.76	500
800+50	811+50	EB & WB	CREST	0.76	-1.06	1100
817+50	822+50	EB & WB	SAG	-1.06	0.49	500
843+50	848+50	EB & WB	CREST	0.49	0.3593	500
869+00	881+00	EB	CREST	0.3593	-1.107	1200
890+49.01	335+00	EB	SAG	-1.107	3.00	1000
869+00	881+00	WB	CREST	0.3593	-1.06	1200
889+96.28	336+50	WB	SAG	-1.06	3.00	1200
337+55.87	364+37.90	EB & WB	CREST	3.00	-1.80	2580
CAMERON RD INTERCHANGE						
8+10.08	11+60.08	RAMP A	SAG	-0.65	4.04	350
12+50	14+50	RAMP A	CREST	4.04	1.60	200
6+04.51	8+04.51	RAMP B	SAG	-1.6	0.93	200
8+54.06	12+54.06	RAMP C	SAG	-1.6	3.60	400
16+00	18+00	RAMP C	CREST	2.0	3.60	200
1+01.50	4+01.50	RAMP D	CREST	-2.0	-6.00	300
6+93.11	10+93.11	RAMP D	SAG	-6.0	0.80	400
10+93.11	12+43.11	RAMP D	CREST	0.80	-0.51	150
MAIN ST (IL 164) INTERCHANGE						
2+00	6+00	RAMP C	SAG	-1.80	2.9526	400
9+20	14+40	RAMP C	CREST	2.9526	-2.9617	520
14+48.06	15+48.06	RAMP C	SAG	-2.9617	-2.12	100
15+48.06	16+48.06	RAMP C	SAG	-2.12	-2.347	100
6+60.92	8+10.92	RAMP D	CREST	3.00	1.626	150
8+50	13+50	RAMP D	CREST	1.626	-1.902	500
13+50	18+50	RAMP D	SAG	-1.902	1.00	500
20+05	21+55	RAMP D	SAG	1.00	1.600	150

STRUCTURE OMISSIONS

(EB US 34) STA 894+29 TO 896+31
(EB US 34) STA 350+15 TO 351+95
(WB US 34) STA 892+42 TO 894+83
(WB US 34) STA 350+29 TO 352+15
(MAIN ST RAMP C) STA 21+09 TO 23+50
(MAIN ST RAMP D) STA 0+00 TO 1+44

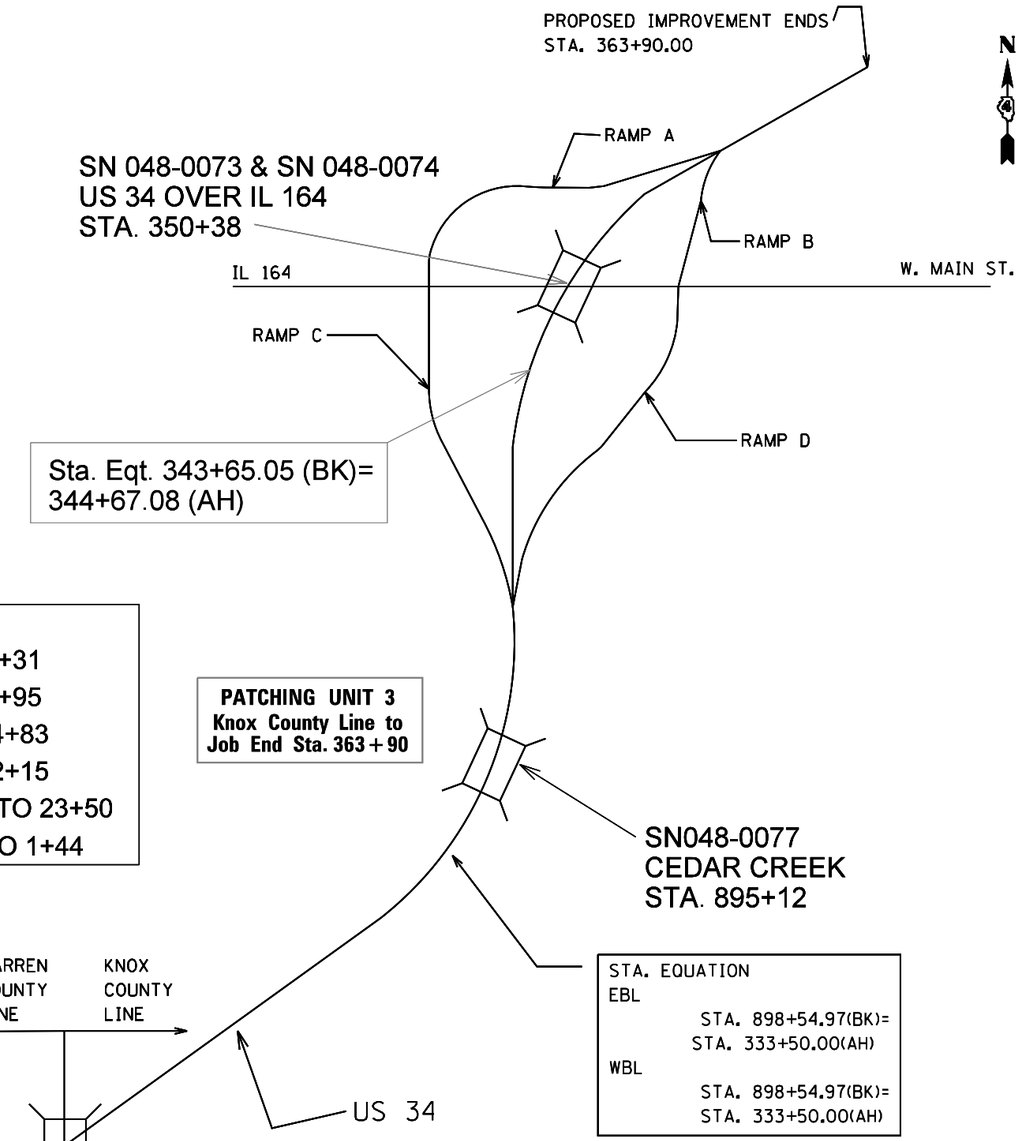

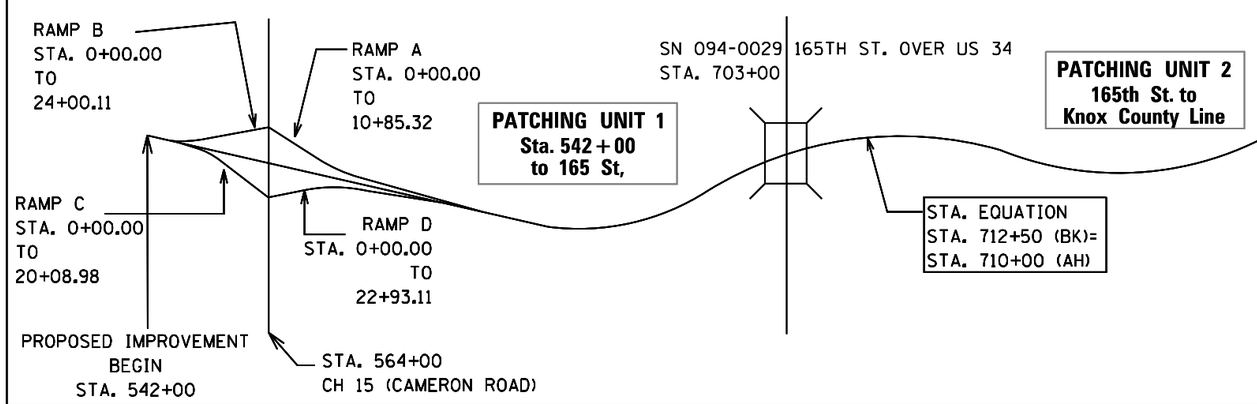

STRUCTURES ON PROJECT		
STRUCTURE NUMBER	ON STRUCTURE	UNDER STRUCTURE
094-0028	140TH ST (CAMERON RD)	US 34
094-0029	165TH ST	US 34
048-0078	180TH ST (COUNTY LINE)	US 34
048-0073	WB US 34	IL 164
048-0074	EB US 34	IL 164
048-0076	WB US 34	CEDAR CREEK
048-0077	EB US 34	CEDAR CREEK

ROADWAY

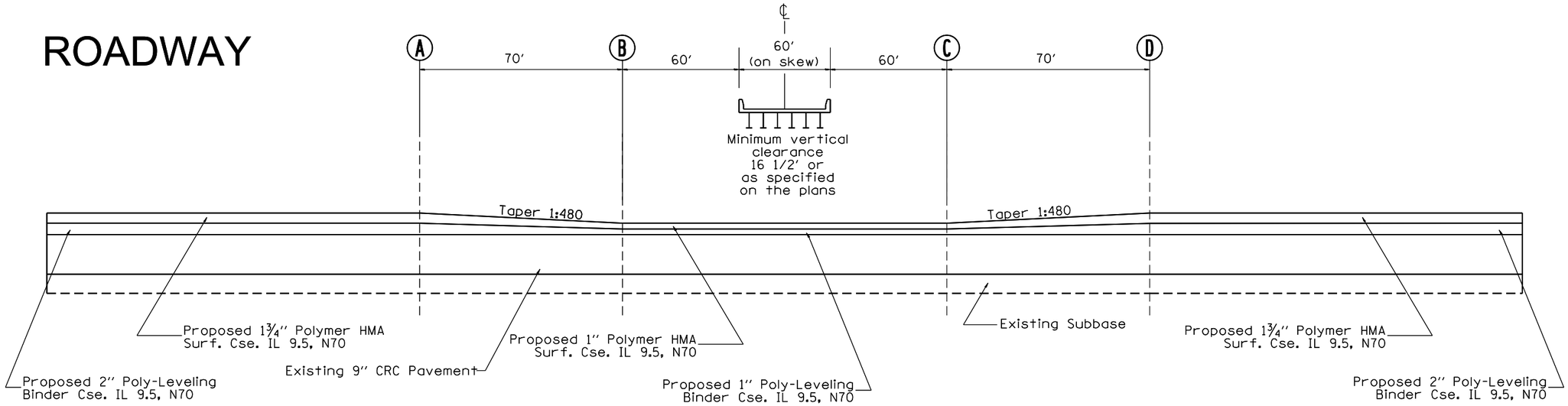

SHOULDER

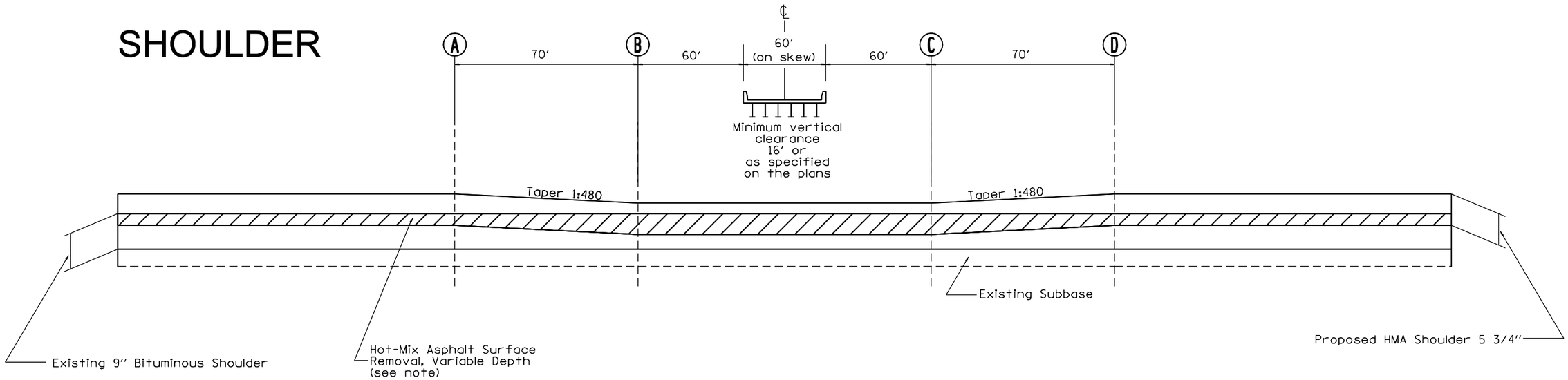

Note: HMA surface removal depth will vary so that the milled surface of the bituminous shoulder is lower than the CRC pavement surface by the following amounts: A - 2.5″, B = 4.25″, C = 4.25″, D = 2.5″. Proposed HMA Shoulder thickness will remain a constant 6.25″.

not to scale

MODEL: Default
FILE NAME: C:\Users\aubreygs\Desktop\68339\048339-plans.dgn

USER NAME = aubreygs	DESIGNED -	REVISED -	
	DRAWN -	REVISED -	
PLOT SCALE = 200.0000 ' / in.	CHECKED -	REVISED -	
PLOT DATE = 12/15/2017	DATE -	REVISED -	

STATE OF ILLINOIS
DEPARTMENT OF TRANSPORTATION

SN 048-0078 RESURFACING
UNDER STRUCTURE DETAIL

SCALE: | SHEET OF SHEETS | STA. | TO STA.

F.A.P.	SECTION	COUNTY	TOTAL SHEETS	SHEET NO.
313	94(16,16-1,17)RS,48(17,18)RS	WARREN-KNOX	118	31
RTE US 34/IL 110		CONTRACT NO. 68339		
		ILLINOIS	FED. AID PROJECT	

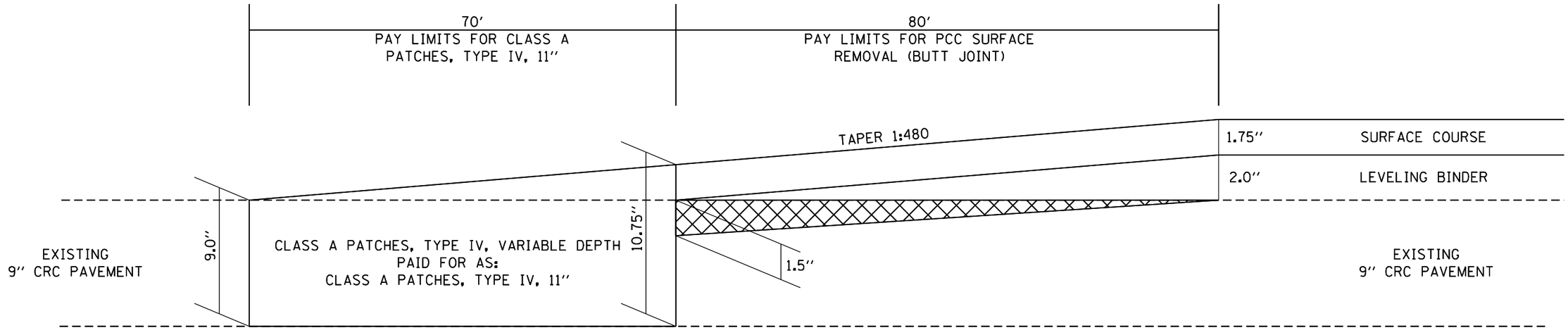

US-34/IL 110 MAINLINE (EB & WB)
STA 542+00 TO 543+50

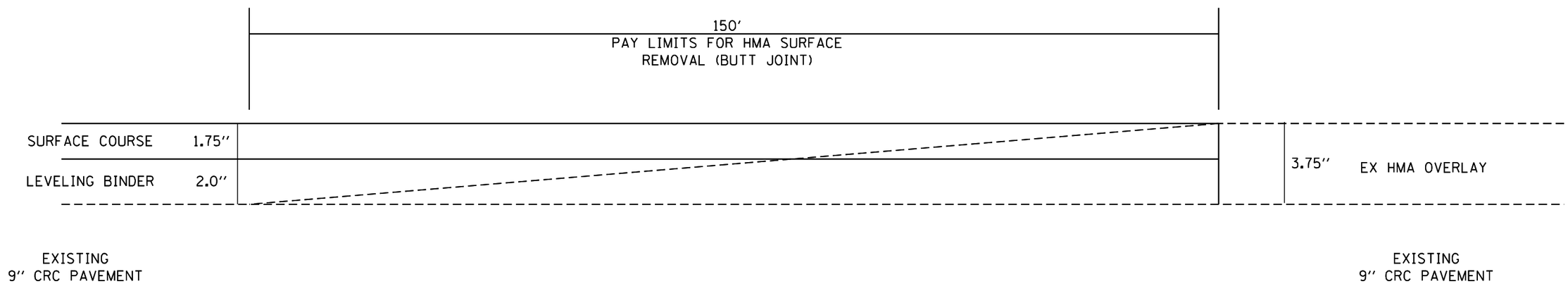

US-34/IL 110 MAINLINE (EB & WB)
STA 362+40 TO 363+90

not to scale

MODEL: Default
FILE NAME: C:\Users\aubreygs\Desktop\68339\D468339-plans.dgn

USER NAME = aubreygs	DESIGNED -	REVISED -	
	DRAWN -	REVISED -	
PLOT SCALE = 200.0000 ' / in.	CHECKED -	REVISED -	
PLOT DATE = 12/15/2017	DATE -	REVISED -	

STATE OF ILLINOIS
DEPARTMENT OF TRANSPORTATION

BUTT JOINT DETAILS
MAINLINE ENDS OF PROJECT

SCALE: SHEET OF SHEETS STA. TO STA.

F.A.P.	SECTION	COUNTY	TOTAL SHEETS	SHEET NO.
313	94(16,16-1,17)RS,48(17,18)RS	WARREN-KNOX	118	32
RTE US 34/IL 110		CONTRACT NO. 68339		
	ILLINOIS	FED. AID PROJECT		

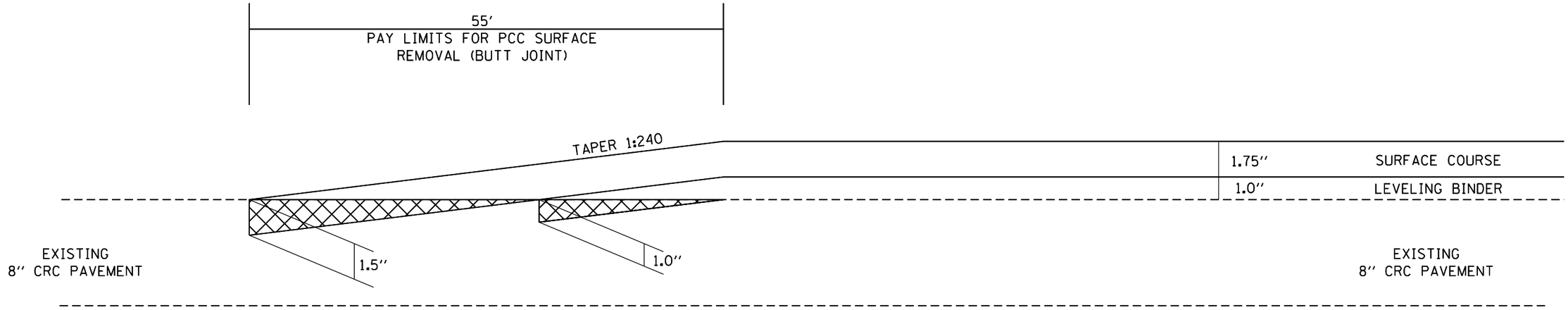

US-34/CAMERON RD. INTERCHANGE RAMPS
RAMP A STA 17+94 TO 18+49
RAMP B STA 1+42 TO 1+97
RAMP C STA 17+94 TO 18+49
RAMP D STA 1+02 TO 1+57

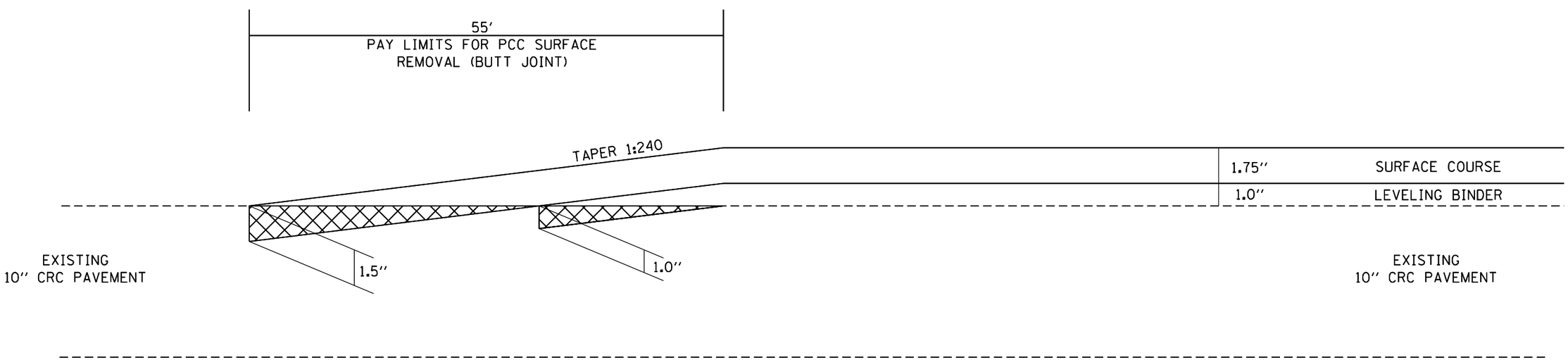

US-34/IL 164 (MAIN ST.) INTERCHANGE RAMPS
RAMP C STA 1+00 TO 1+55
RAMP D STA 20+45 TO 21+00

not to scale

MODEL: Default
FILE NAME: C:\Users\aubreygs\Desktop\68339\0468339-plans.dgn

USER NAME = aubreygs	DESIGNED -	REVISED -	
	DRAWN -	REVISED -	
PLOT SCALE = 200.0000 ' / in.	CHECKED -	REVISED -	
PLOT DATE = 12/15/2017	DATE -	REVISED -	

STATE OF ILLINOIS
DEPARTMENT OF TRANSPORTATION

BUTT JOINT DETAILS
RAMPS

SCALE: SHEET OF SHEETS STA. TO STA.

F.A.P.	SECTION	COUNTY	TOTAL SHEETS	SHEET NO.
313	94(16,16-1,17)RS,48(17,18)RS	WARREN-KNOX	118	33
RTE US 34/IL 110		CONTRACT NO. 68339		
	ILLINOIS	FED. AID PROJECT		

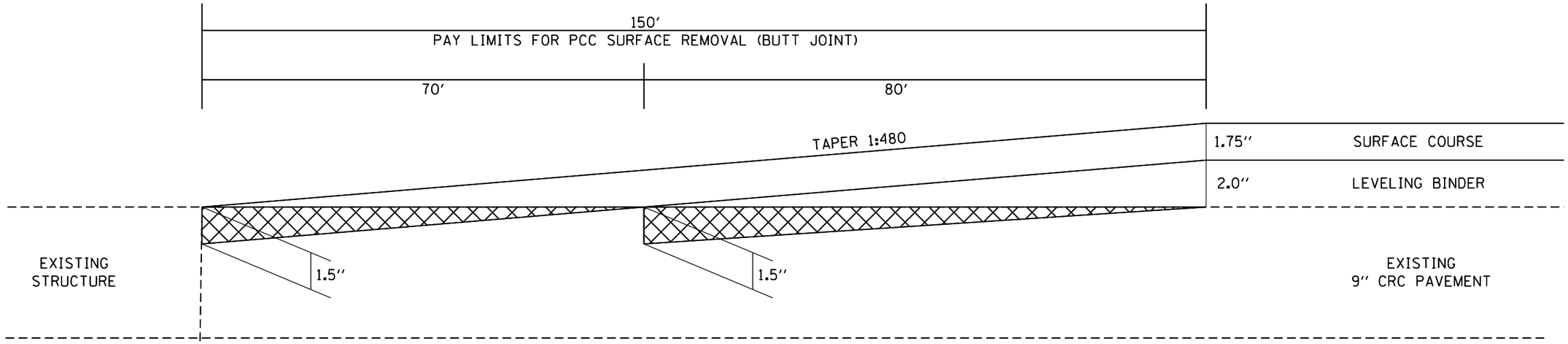

US 34/IL 110 MAINLINE (EB & WB)

WB STA 890+98 TO 892+48
WB STA 894+89 TO 896+43
EB STA 892+61 TO 894+11
EB STA 896+12 TO 897+62

WB STA 348+46 TO 349+96
WB STA 351+75 TO 353+25
EB STA 348+61 TO 350+11
EB STA 351+96 TO 353+46

not to scale

MODEL: Default
FILE NAME: C:\Users\aubreygs\Desktop\68339\D468339-plans.dgn

USER NAME = aubreygs	DESIGNED -	REVISED -	STATE OF ILLINOIS DEPARTMENT OF TRANSPORTATION
	DRAWN -	REVISED -	
PLOT SCALE = 200.0000 ' / in.	CHECKED -	REVISED -	
PLOT DATE = 12/15/2017	DATE -	REVISED -	

BUTT JOINT DETAILS
BRIDGES

SCALE: SHEET OF SHEETS STA. TO STA.

F.A.P.	SECTION	COUNTY	TOTAL SHEETS	SHEET NO.
313	94(16,16-1,17)RS,48(17,18)RS	WARREN-KNOX	118	34
RTE US 34/IL 110		CONTRACT NO. 68339		
		ILLINOIS	FED. AID PROJECT	

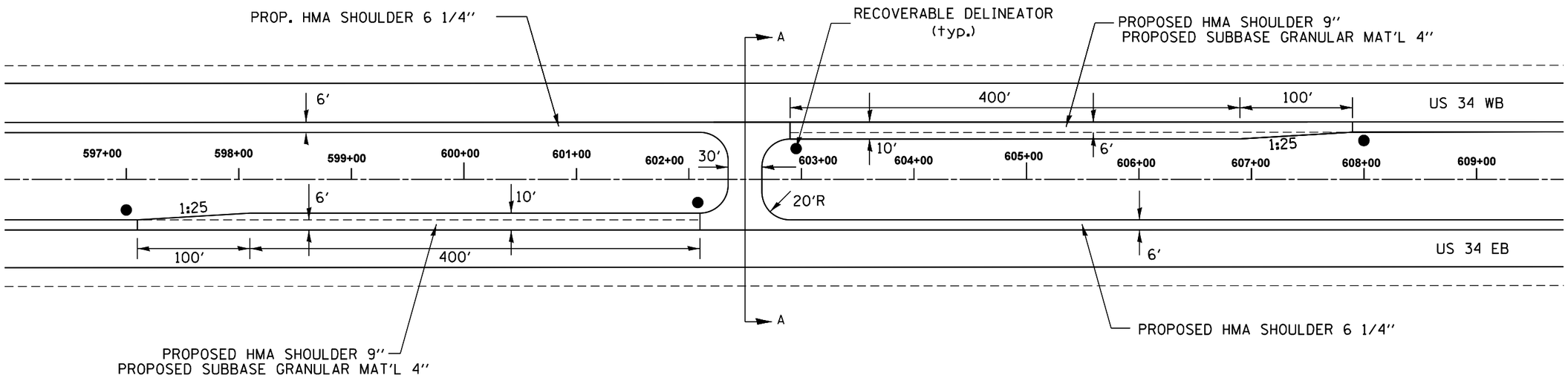

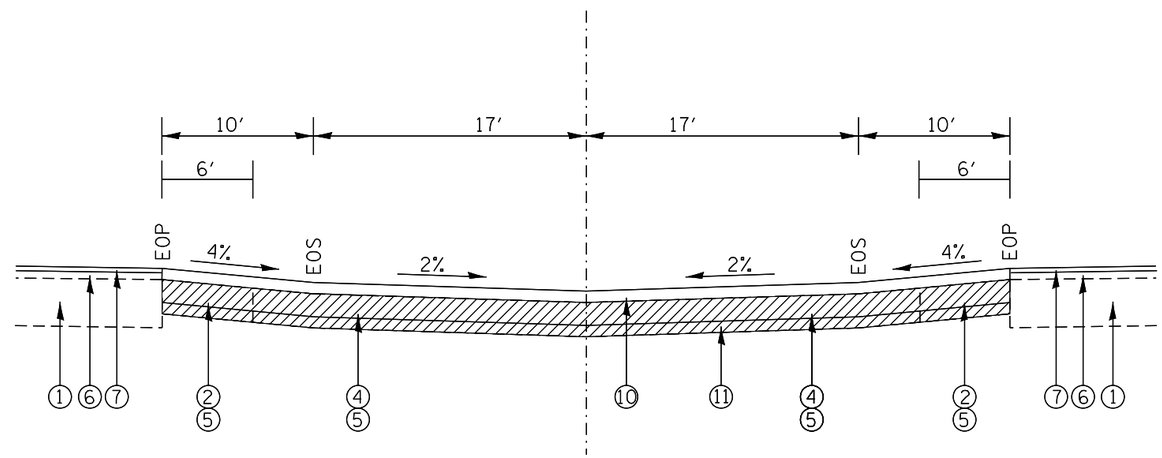

A-A

1. Existing CRC Pavement 9''
2. Existing Bituminous Shoulder
3. Existing Aggregate Crossover
4. Exisitng Bituminous Crossover
5. Proposed Shoulder Removal
6. Proposed Surface Course 1.75''
7. Proposed Leveling Binder 2''
8. Proposed HMA Surface Removal (Var Depth)
9. Proposed HMA Shoulder 6 1/4''
10. Proposed HMA Shoulder 9''
11. Proposed Subbase Granular Material 4''

not to scale

MODEL: Default
FILE NAME: C:\Users\aubreygs\Desktop\68339\D468339-plans.dgn

USER NAME = aubreygs	DESIGNED -	REVISED -	
	DRAWN -	REVISED -	
PLOT SCALE = 200.0000 ' / in.	CHECKED -	REVISED -	
PLOT DATE = 12/15/2017	DATE -	REVISED -	

STATE OF ILLINOIS
DEPARTMENT OF TRANSPORTATION

MEDIAN CROSSOVER
STA 602+35

SCALE: SHEET OF SHEETS STA. TO STA.

F.A.P.	SECTION	COUNTY	TOTAL SHEETS	SHEET NO.
313	94(16,16-1,17)RS,48(17,18)RS	WARREN-KNOX	118	35
RTE US 34/IL 110		CONTRACT NO. 68339		
		ILLINOIS	FED. AID PROJECT	

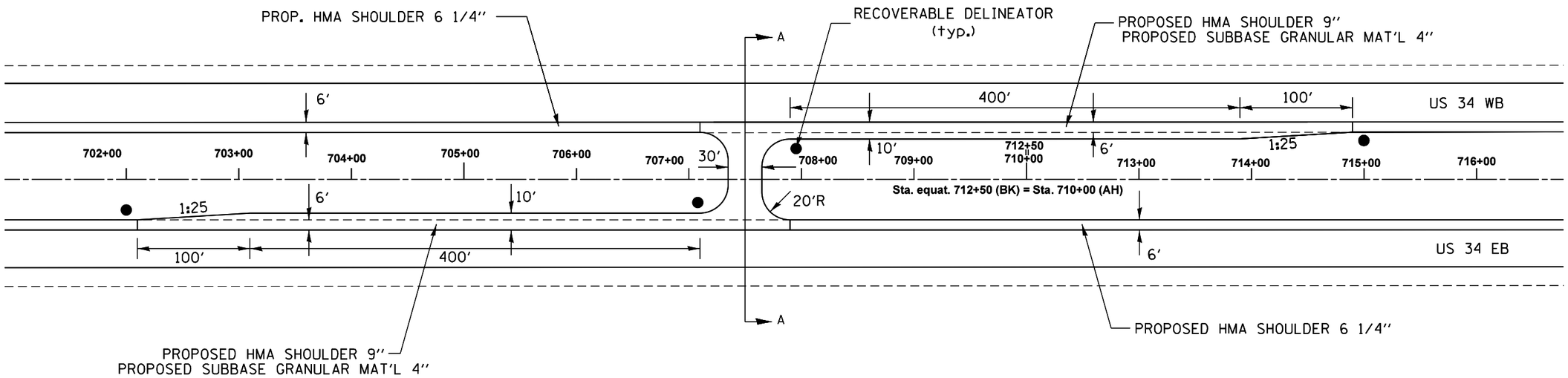

STA. EQUATION
STA. 712+50 (BK)=
STA. 710+00 (AH)

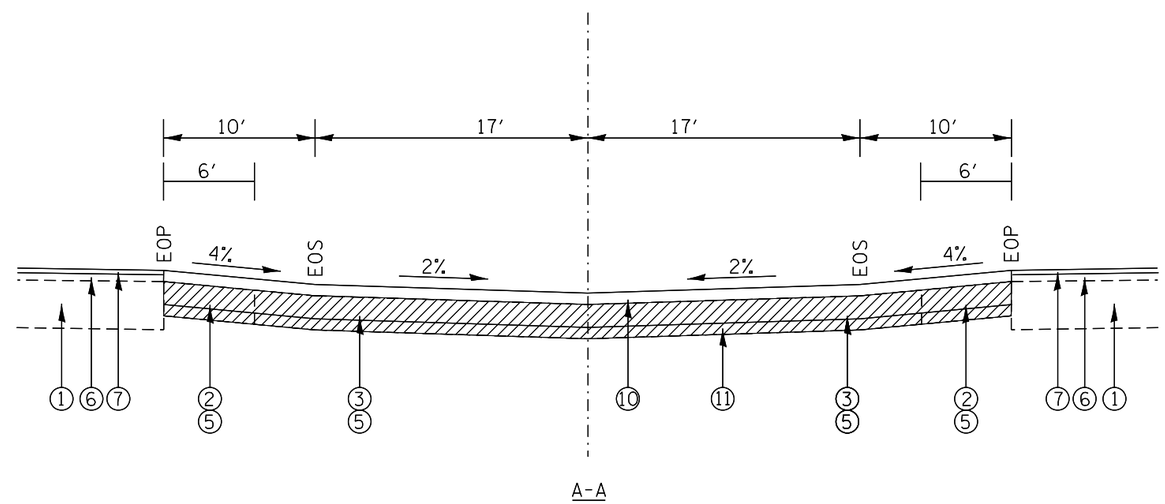

1. Existing CRC Pavement 9''
2. Existing Bituminous Shoulder
3. Existing Aggregate Crossover
4. Exisitng Bituminous Crossover
5. Proposed Shoulder Removal
6. Proposed Surface Course 1.75''
7. Proposed Leveling Binder 2''
8. Proposed HMA Surface Removal (Var Depth)
9. Proposed HMA Shoulder 6 1/4''
10. Proposed HMA Shoulder 9''
11. Proposed Subbase Granular Material 4''

not to scale

MODEL: Default
FILE NAME: C:\Users\aubreygs\Desktop\68339\D468339-plans.dgn

USER NAME = aubreygs	DESIGNED -	REVISED -	
	DRAWN -	REVISED -	
PLOT SCALE = 200.0000 ' / in.	CHECKED -	REVISED -	
PLOT DATE = 12/15/2017	DATE -	REVISED -	

STATE OF ILLINOIS
DEPARTMENT OF TRANSPORTATION

MEDIAN CROSSOVER
STA 707+66

SCALE: SHEET OF SHEETS STA. TO STA.

F.A.P.	SECTION	COUNTY	TOTAL SHEETS	SHEET NO.
313	94(16,16-1,17)RS,48(17,18)RS	WARREN-KNOX	118	36
RTE US 34/IL 110		CONTRACT NO. 68339		
		ILLINOIS	FED. AID PROJECT	

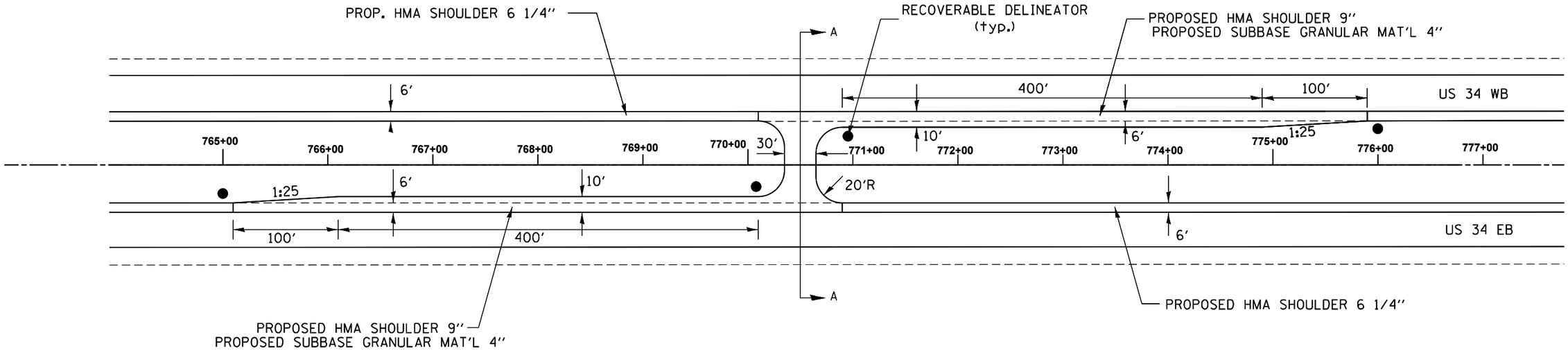

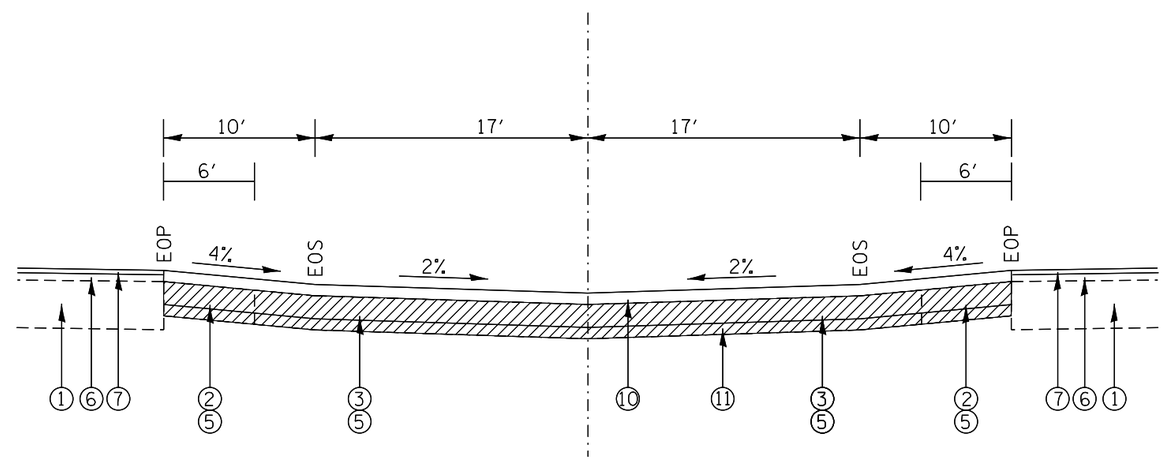

A-A

1. Existing CRC Pavement 9''
2. Existing Bituminous Shoulder
3. Existing Aggregate Crossover
4. Exisitng Bituminous Crossover
5. Proposed Shoulder Removal
6. Proposed Surface Course 1.75''
7. Proposed Leveling Binder 2''
8. Proposed HMA Surface Removal (Var Depth)
9. Proposed HMA Shoulder 6 1/4''
10. Proposed HMA Shoulder 9''
11. Proposed Subbase Granular Material 4''

not to scale

MODEL: Default
FILE NAME: C:\Users\aubreygs\Desktop\68339\D468339-plans.dgn

USER NAME = aubreygs	DESIGNED -	REVISED -	
	DRAWN -	REVISED -	
PLOT SCALE = 200.0000 ' / in.	CHECKED -	REVISED -	
PLOT DATE = 12/15/2017	DATE -	REVISED -	

STATE OF ILLINOIS
DEPARTMENT OF TRANSPORTATION

MEDIAN CROSSOVER
STA 770+35

SCALE: SHEET OF SHEETS STA. TO STA.

F.A.P.	SECTION	COUNTY	TOTAL SHEETS	SHEET NO.
313	94(16,16-1,17)RS,48(17,18)RS	WARREN-KNOX	118	37
RTE US 34/IL 110		CONTRACT NO. 68339		
		ILLINOIS	FED. AID PROJECT	

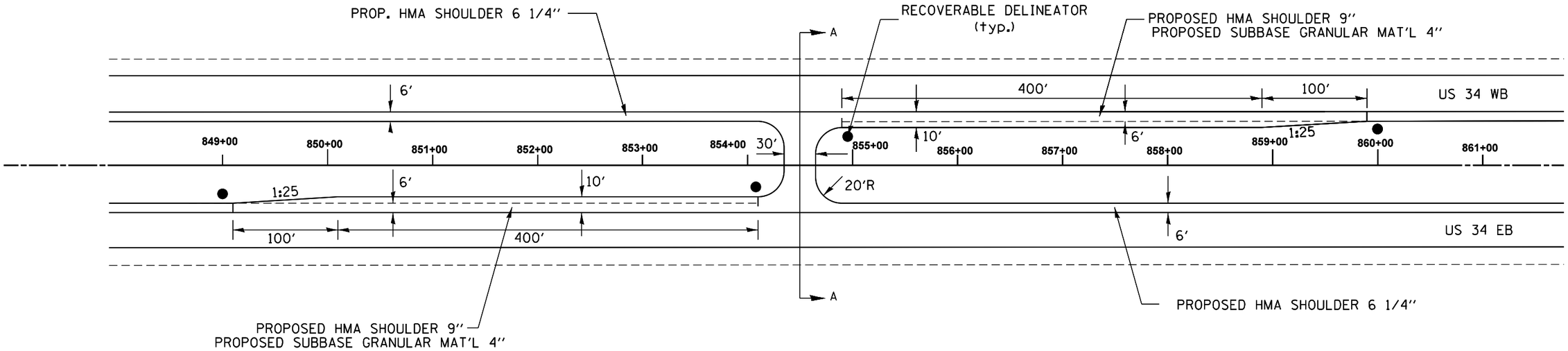

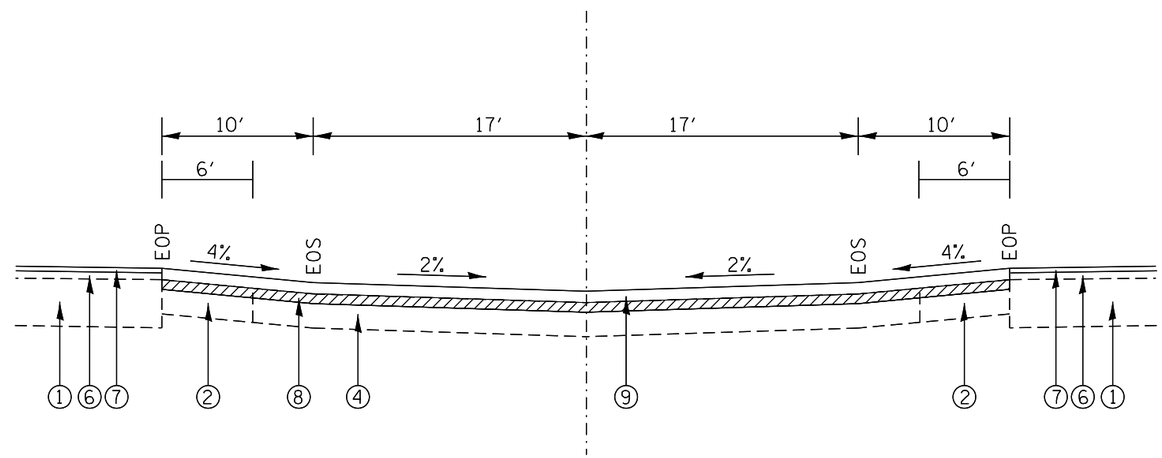

A-A

1. Existing CRC Pavement 9''
2. Existing Bituminous Shoulder
3. Existing Aggregate Crossover
4. Exisitng Bituminous Crossover
5. Proposed Shoulder Removal
6. Proposed Surface Course 1.75''
7. Proposed Leveling Binder 2''
8. Proposed HMA Surface Removal (Var Depth)
9. Proposed HMA Shoulder 6 1/4''
10. Proposed HMA Shoulder 9''
11. Proposed Subbase Granular Material 4''

not to scale

MODEL: Default
FILE NAME: C:\Users\aubreygs\Desktop\68339\D468339-plans.dgn

USER NAME = aubreygs	DESIGNED -	REVISED -	
	DRAWN -	REVISED -	
PLOT SCALE = 200.0000 ' / in.	CHECKED -	REVISED -	
PLOT DATE = 12/15/2017	DATE -	REVISED -	

STATE OF ILLINOIS
DEPARTMENT OF TRANSPORTATION

MEDIAN CROSSOVER
STA 854+68

SCALE: SHEET OF SHEETS STA. TO STA.

F.A.P.	SECTION	COUNTY	TOTAL SHEETS	SHEET NO.
313	94(16,17)RS,48(17,18)RS	WARREN-KNOX	118	38
RTE US 34/IL 110		CONTRACT NO. 68339		
		ILLINOIS	FED. AID PROJECT	

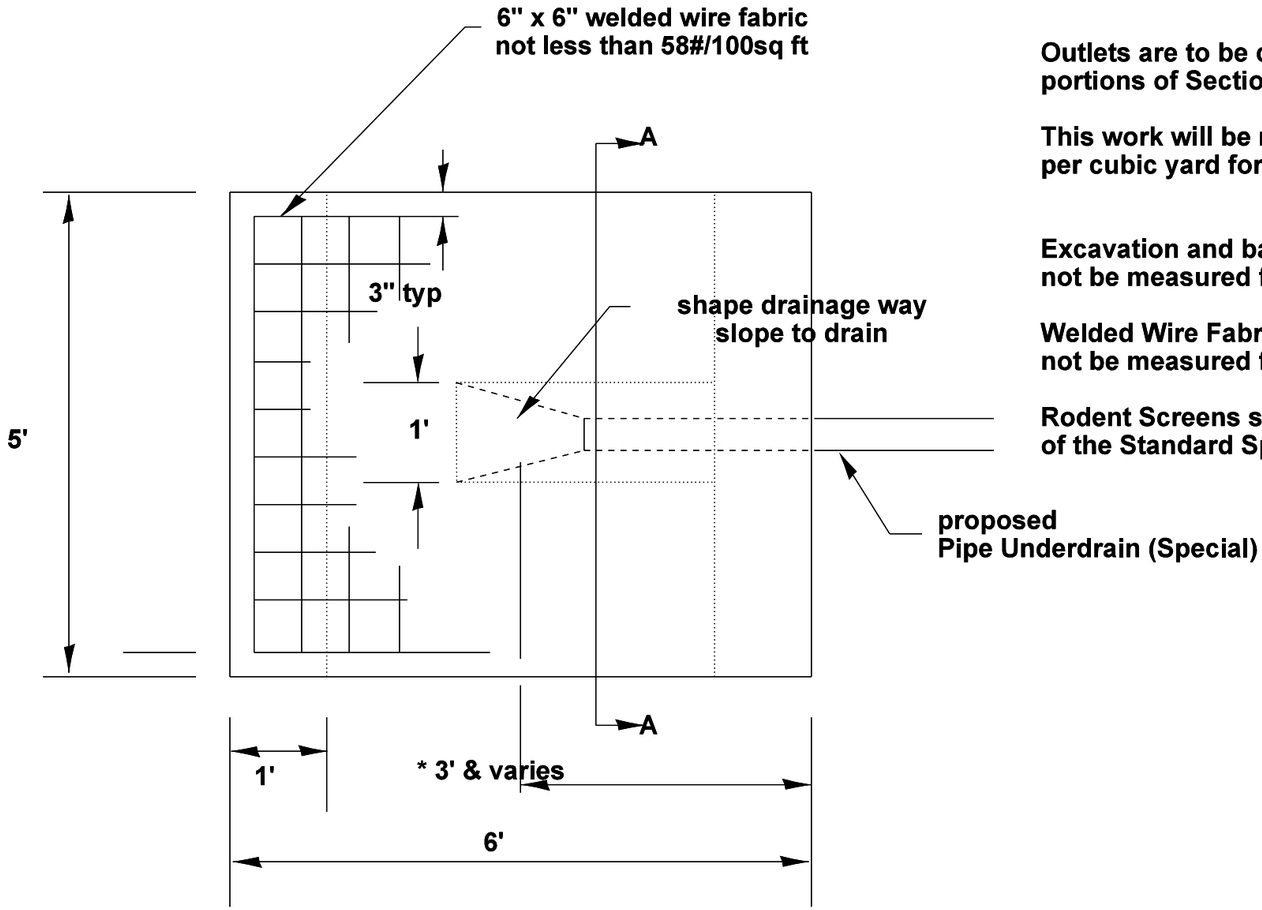

Plan View

Outlets are to be constructed in accordance with applicable portions of Section 606 of the Standard Specifications.

This work will be measured for payment at the contract unit price per cubic yard for CLASS SI CONCRETE FOR PIPE UNDERDRAIN OUTLET

Excavation and backfill required for this work will not be measured for payment.

Welded Wire Fabric required for this work will not be measured for payment.

Rodent Screens shall be in accordance with Article 601.05 of the Standard Specifications and State Standard 601101.

Quantities for *Standard Protector		
Type	Class SI Cu Yd	WWF Sq Yd
I	.63	2.75
II	.88	3.75
III	1.39	6.75

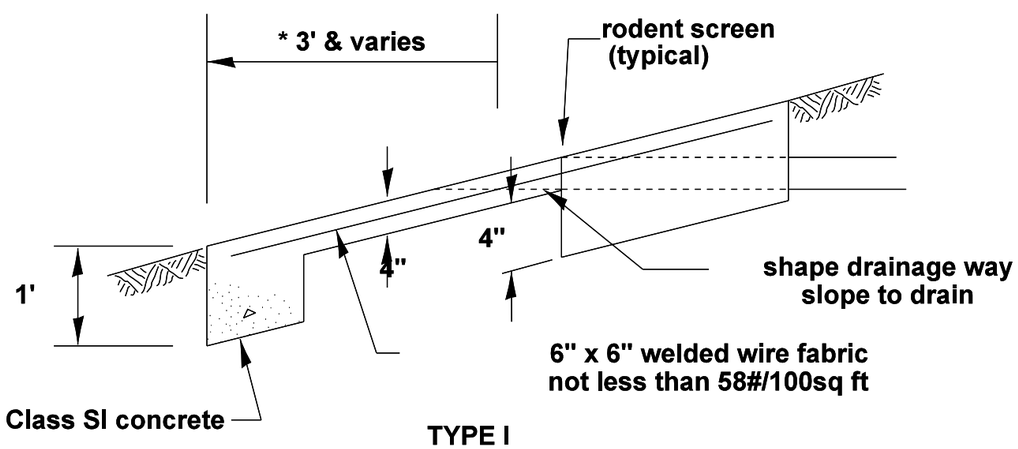

TYPE I

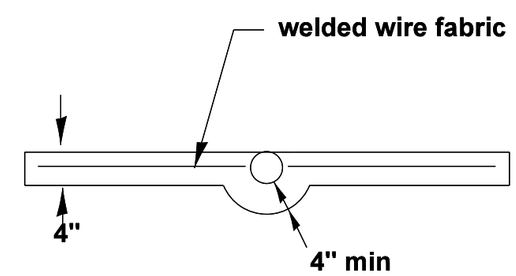

section A-A
typical

not to scale

All dimensions are in inches (millimeters) unless otherwise noted.

MODEL: Default
FILE NAME: C:\Users\aubreygs\Desktop\68339\D468339-plans.dgn

USER NAME = aubreygs	DESIGNED -	REVISED -	
	DRAWN -	REVISED -	
PLOT SCALE = 200.0000 ' / in.	CHECKED -	REVISED -	
PLOT DATE = 12/15/2017	DATE -	REVISED -	

STATE OF ILLINOIS
DEPARTMENT OF TRANSPORTATION

UNDERDRAIN OUTLET PROTECTION
1 OF 2

SCALE: SHEET OF SHEETS STA. TO STA.

F.A.P.	SECTION	COUNTY	TOTAL SHEETS	SHEET NO.
313	94(16,16-1,17)RS,48(17,18)RS	WARREN-KNOX	118	39
RTE US 34/IL 110		CONTRACT NO. 68339		
		ILLINOIS	FED. AID PROJECT	

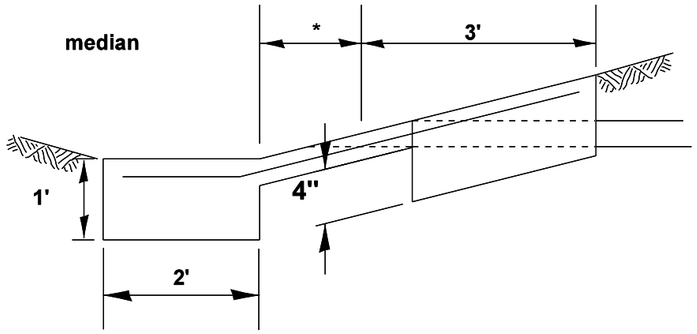

* Varies at all locations where the outlet is within 3 feet of the ditch flow line.

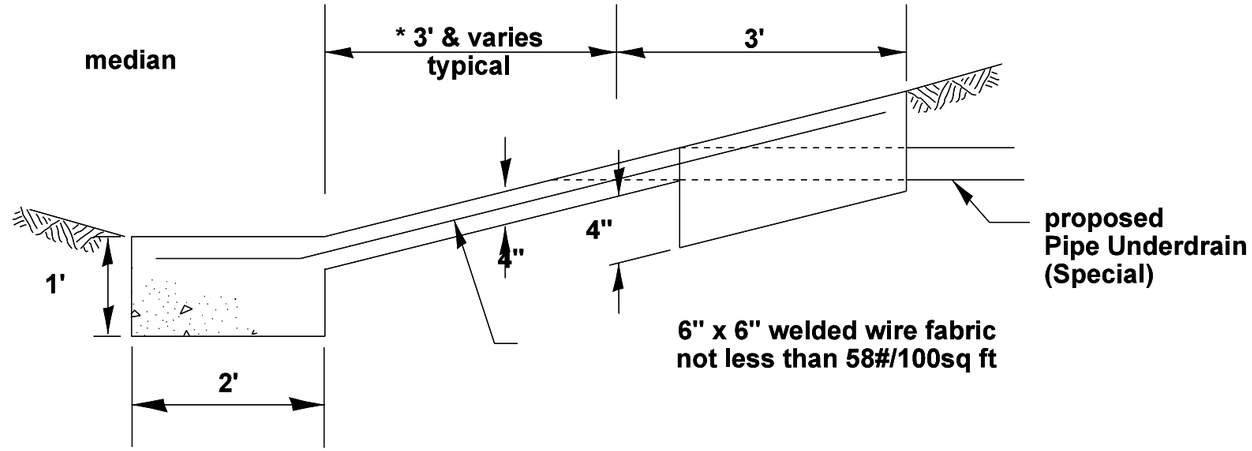

Type II

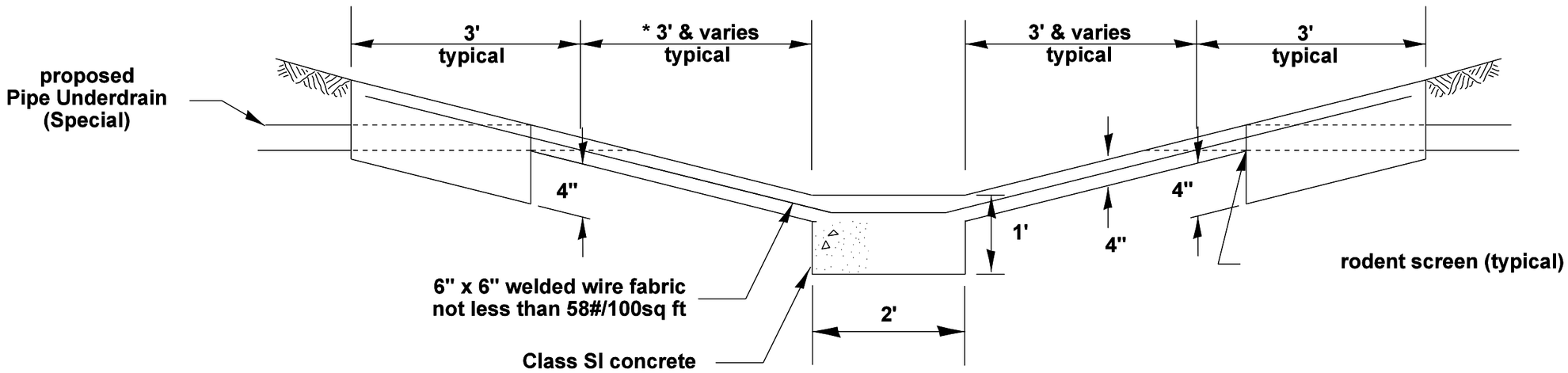

Type III

not to scale

All dimensions are in inches (millimeters) unless otherwise noted.

MODEL: Default
FILE NAME: C:\Users\aubreygs\Desktop\68339\D468339-plans.dgn

USER NAME = aubreygs	DESIGNED -	REVISED -	STATE OF ILLINOIS DEPARTMENT OF TRANSPORTATION
	DRAWN -	REVISED -	
PLOT SCALE = 200.0000 ' / in.	CHECKED -	REVISED -	
PLOT DATE = 12/15/2017	DATE -	REVISED -	

UNDERDRAIN OUTLET PROTECTION
2 OF 2

SCALE: SHEET OF SHEETS STA. TO STA.

F.A.P.	SECTION	COUNTY	TOTAL SHEETS	SHEET NO.
313	94(16,16-1,17)RS,48(17,18)RS	WARREN-KNOX	118	39
RTE US 34/IL 110		CONTRACT NO. 68339		
		ILLINOIS	FED. AID PROJECT	

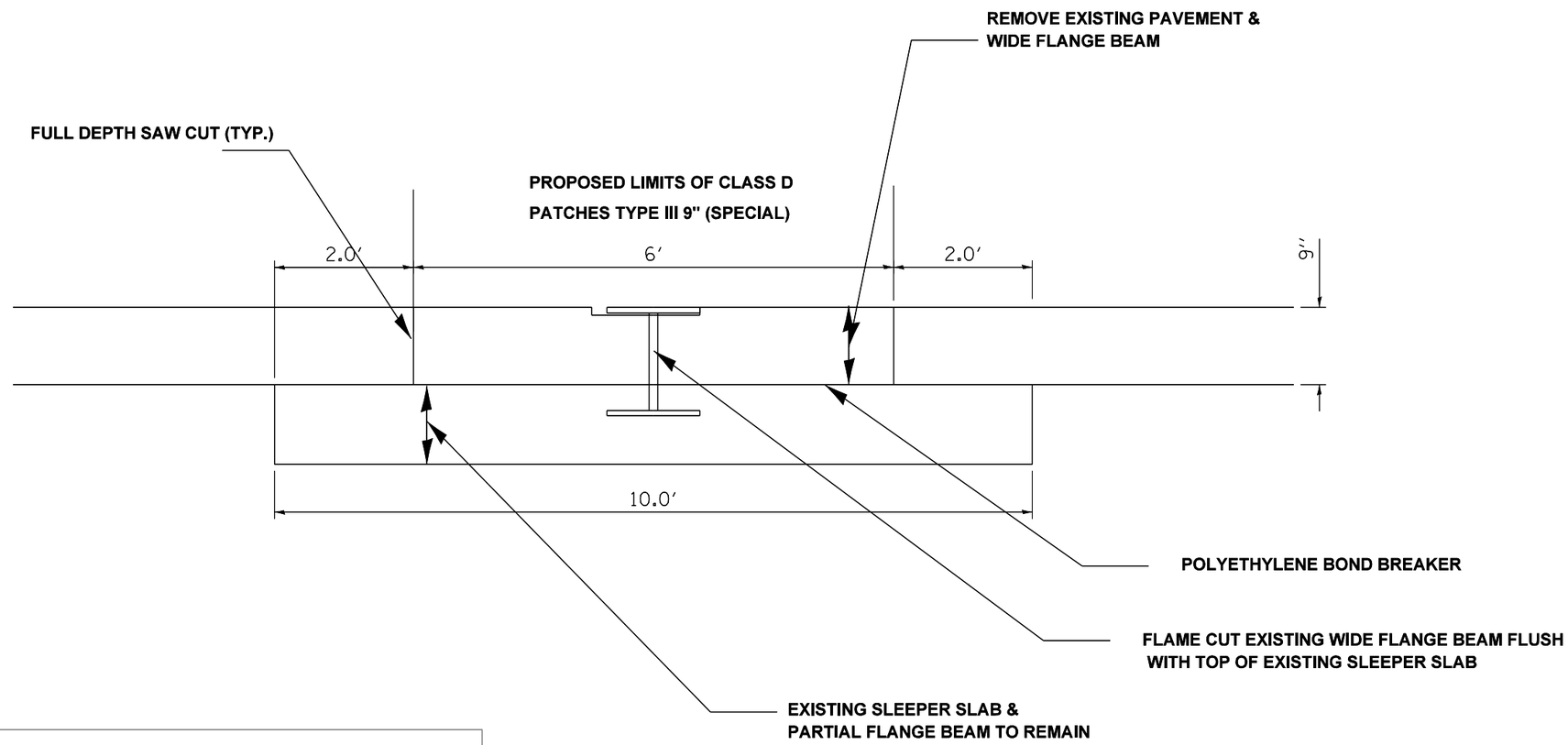

NOTES:

1. EXISTING WIDE FLANGE BEAM JOINTS SHALL BE REMOVED AND REPLACED WITH CLASS D PATCHES TYPE II 9" (SPECIAL)
2. WORK SHALL BE DONE IN ACCORDANCE TO APPLICABLE SECTIONS OF ARTICLE 442.08 OF STANDARD SPECIFICATIONS AND AS DIRECTED BY THE ENGINEER.
3. ALL WORK, MATERIAL AND THE PLACEMENT OF POLYETHYLENE BOND BREAKER AND REMOVAL OF THE WIDE FLANGE BEAM SHALL BE INCLUDED IN THE UNIT PRICE FOR "CLASS D PATCHES TYPE II 9" (SPECIAL)"

US 34 OVER CEDAR CREEK
WB (SN 048-0076) STA 891+18
EB (SN 048-0077) STA 892+81

US 34 OVER IL 164 (MAIN ST)
WB (SN 048-0073) STA 353+06
EB (SN 048-0074) STA 353+26

not to scale

MODEL: Default
FILE NAME: C:\Users\aubreygs\Desktop\68339\0468339-plans.dgn

USER NAME = aubreygs	DESIGNED -	REVISED -	
	DRAWN -	REVISED -	
PLOT SCALE = 200.0000 ' / in.	CHECKED -	REVISED -	
PLOT DATE = 12/15/2017	DATE -	REVISED -	

STATE OF ILLINOIS
DEPARTMENT OF TRANSPORTATION

WIDE FLANGE BEAM JT REMOVAL
CLASS D PATCHES (SPECIAL)

SCALE: SHEET OF SHEETS STA. TO STA.

F.A.P.	SECTION	COUNTY	TOTAL SHEETS	SHEET NO.
313	94(16,16-1,17)RS,48(17,18)RS	WARREN-KNOX	118	41
RTE US 34/IL 110		CONTRACT NO. 68339		
		ILLINOIS	FED. AID PROJECT	

JOINT FILLING WITH MICROSURFACING MATERIAL

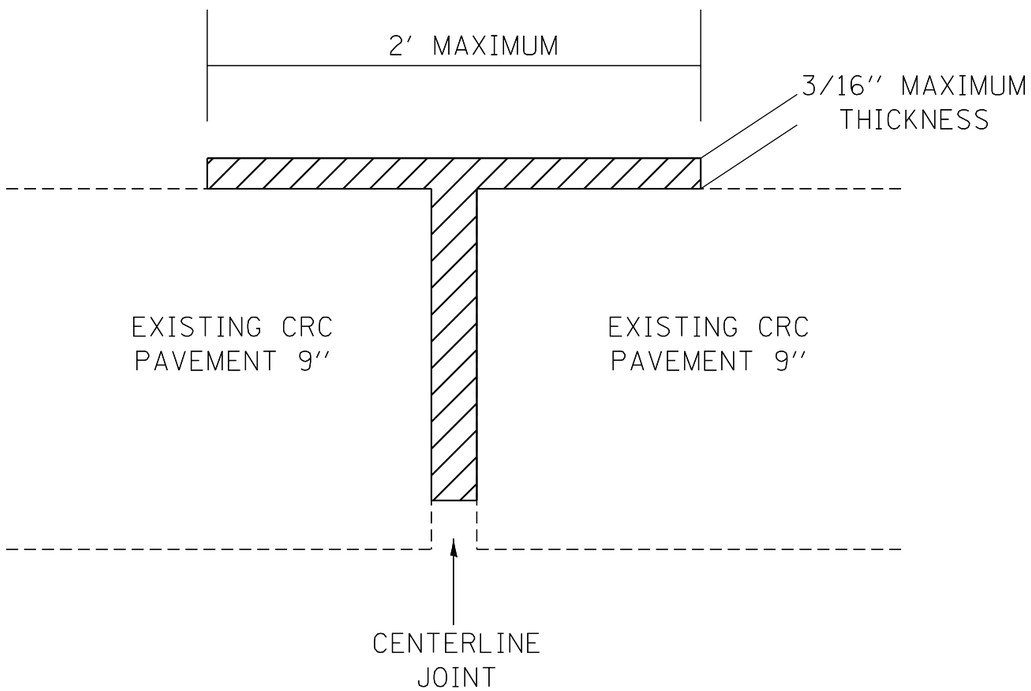

JT FILLING W/ MICROSURFACING MATERIAL

not to scale

HMA SURFACE REMOVAL, VARIABLE DEPTH

BIT SHOULDER LOWER THAN CRC PAVEMENT

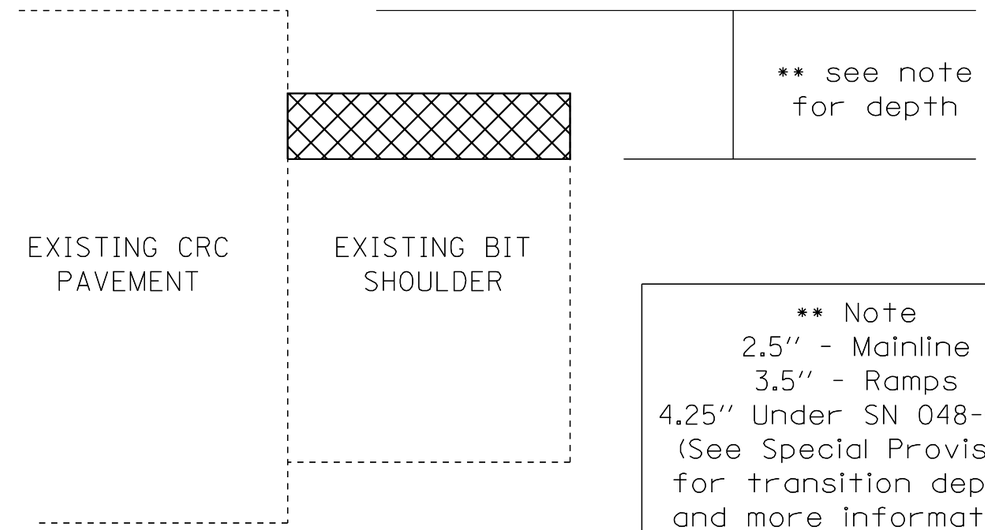

** Note
2.5'' - Mainline
3.5'' - Ramps
4.25'' Under SN 048-0078
(See Special Provision for transition depths and more information)

BIT SHOULDER EVEN WITH CRC PAVEMENT

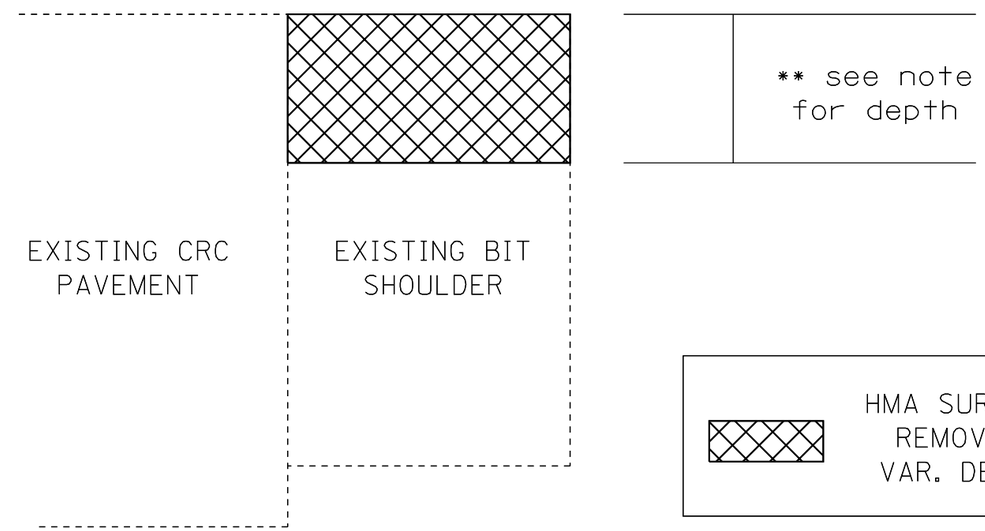

HMA SURFACE REMOVAL, VAR. DEPTH

not to scale

MODEL: Default
FILE NAME: C:\Users\aubreygs\Desktop\68339\D468339-plans.dgn

USER NAME = aubreygs	DESIGNED -	REVISED -	
	DRAWN -	REVISED -	
PLOT SCALE = 200.0000 ' / in.	CHECKED -	REVISED -	
PLOT DATE = 12/15/2017	DATE -	REVISED -	

STATE OF ILLINOIS
DEPARTMENT OF TRANSPORTATION

CENTER JOINT FILLING & HMA SURFACE REMOVAL VAR DEPTH DETAILS

SCALE: | SHEET OF SHEETS | STA. TO STA.

F.A.P.	SECTION	COUNTY	TOTAL SHEETS	SHEET NO.
313	94(16,16-1,17)RS,48(17,18)RS	WARREN-KNOX	118	42
RTE US 34/IL 110		CONTRACT NO. 68339		
	ILLINOIS	FED. AID PROJECT		

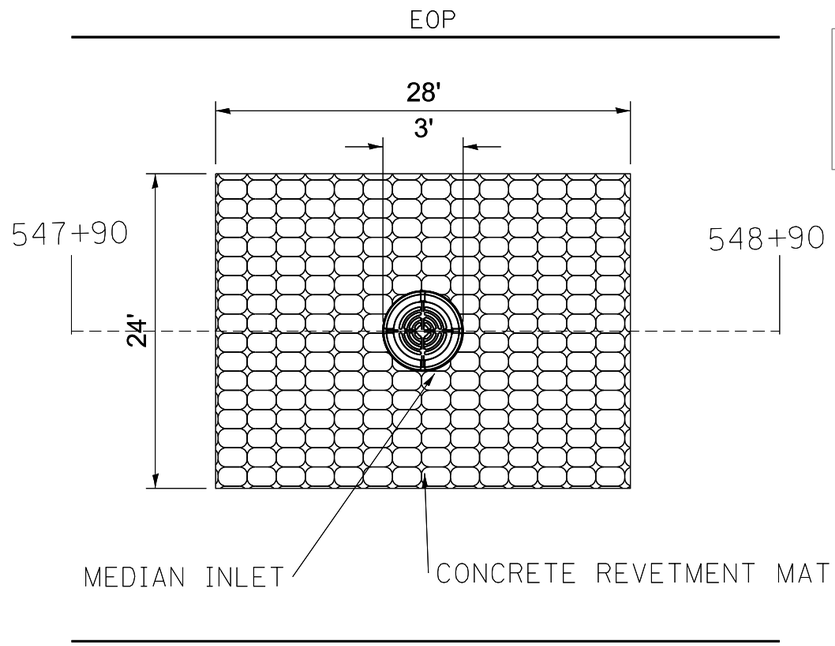

Inlet to be Adjusted with New Median Inlet (604106)
1.0
EACH

N

NOT TO SCALE

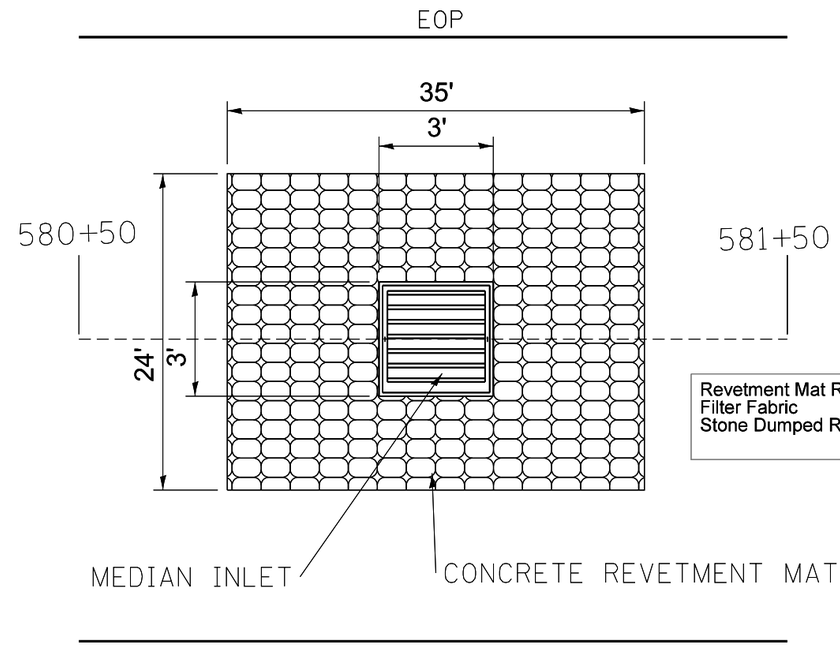

N

Revetment Mat Removal	91.6 SQ.YD
Filter Fabric	63.3 SQ.YD
Stone Dumped Rip Rap CL B3	28 TON

NOT TO SCALE

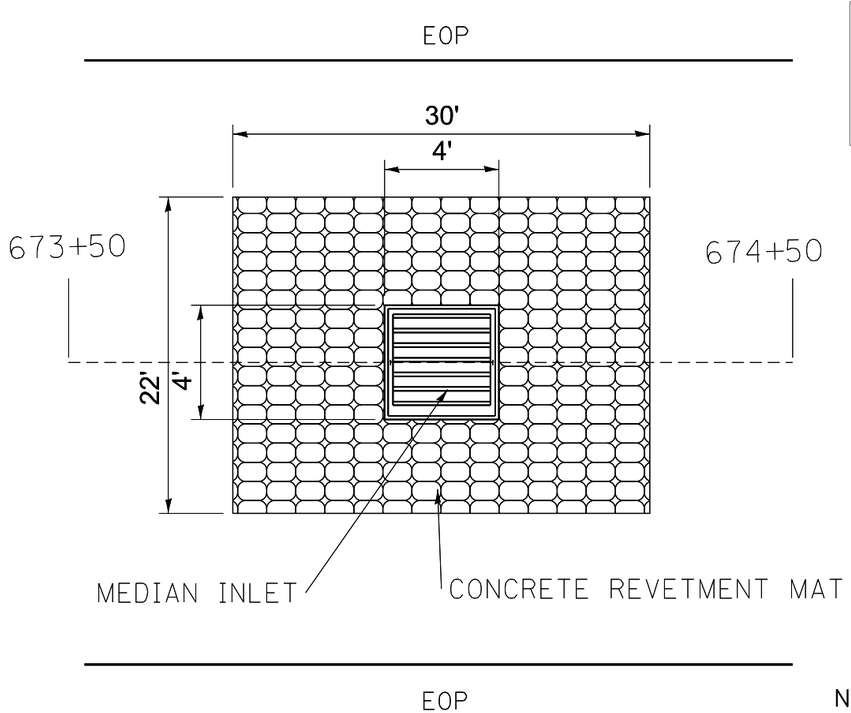

Inlet to be Adjusted with New Frame & Grate (Special)
1.0
EACH

N

NOT TO SCALE

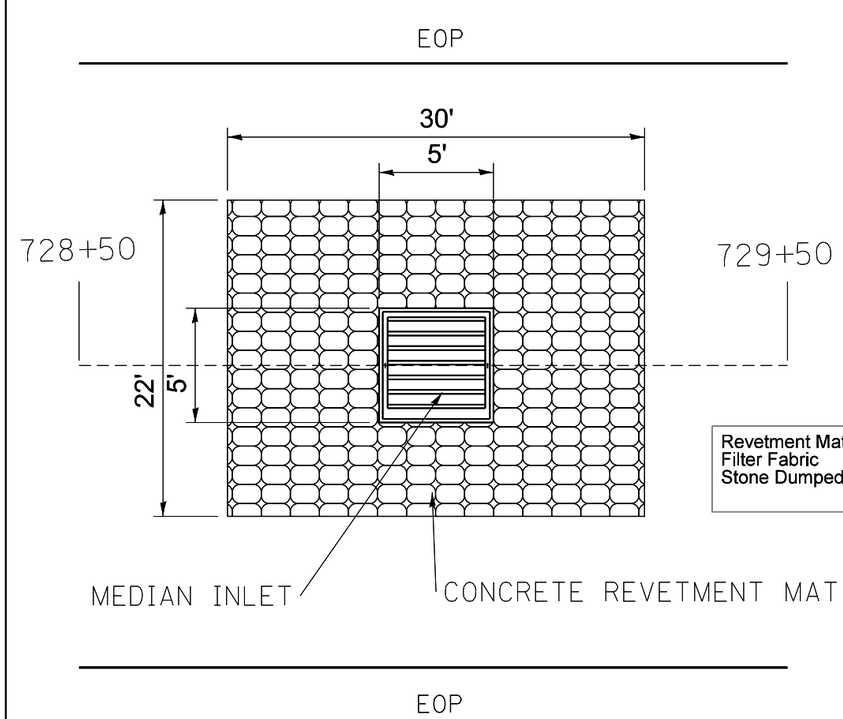

N

Revetment Mat Removal	70.6 SQ.YD
Filter Fabric	73.3 SQ.YD
Stone Dumped Rip Rap CL B3	22 TON

NOT TO SCALE

MODEL: Default
FILE NAME: C:\Users\aubreygs\Desktop\68339\D468339-plans.dgn

USER NAME = aubreygs	DESIGNED -	REVISED -
	DRAWN -	REVISED -
PLOT SCALE = 200.0000 ' / in.	CHECKED -	REVISED -
PLOT DATE = 12/15/2017	DATE -	REVISED -

STATE OF ILLINOIS
DEPARTMENT OF TRANSPORTATION

PROPOSED PLAN
DRAINAGE DETAILS

SCALE: SHEET OF SHEETS STA. TO STA.

F.A.P RTE.	SECTION	COUNTY	TOTAL SHEETS	SHEET NO.
313	94(16,16-1,17)RS,48(17,18)RS	WARREN/KNOX	118	43
RTE US 34/IL 110		CONTRACT NO. 68339		
		ILLINOIS	FED. AID PROJECT	

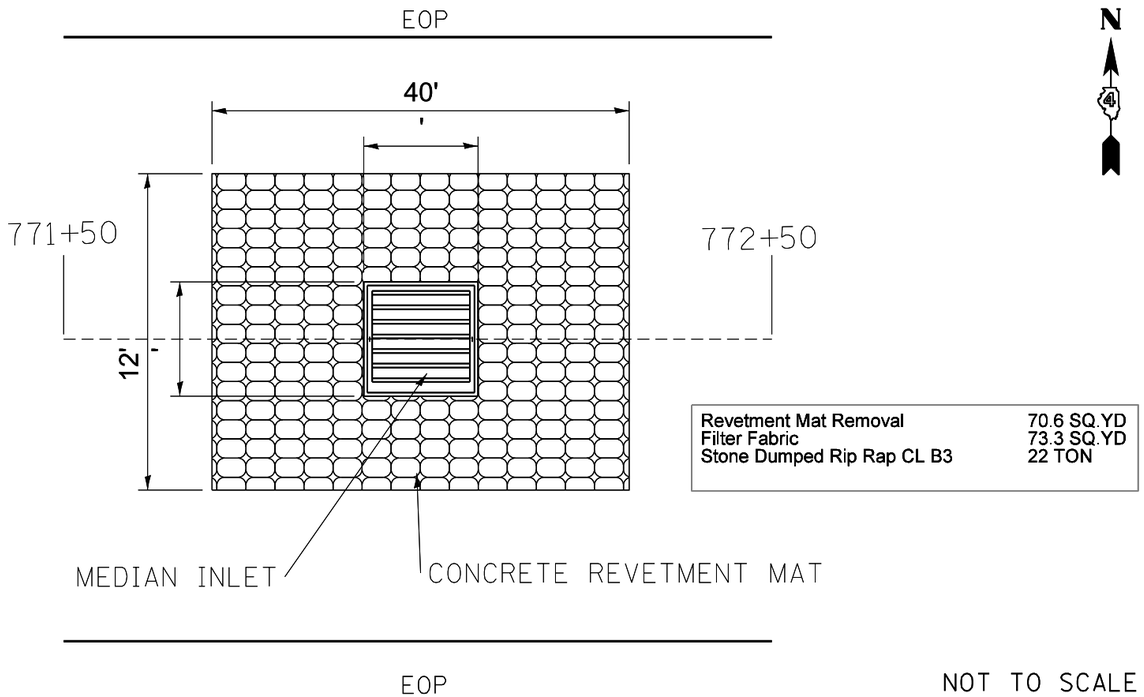

Revetment Mat Removal	70.6 SQ.YD
Filter Fabric	73.3 SQ.YD
Stone Dumped Rip Rap CL B3	22 TON

NOT TO SCALE

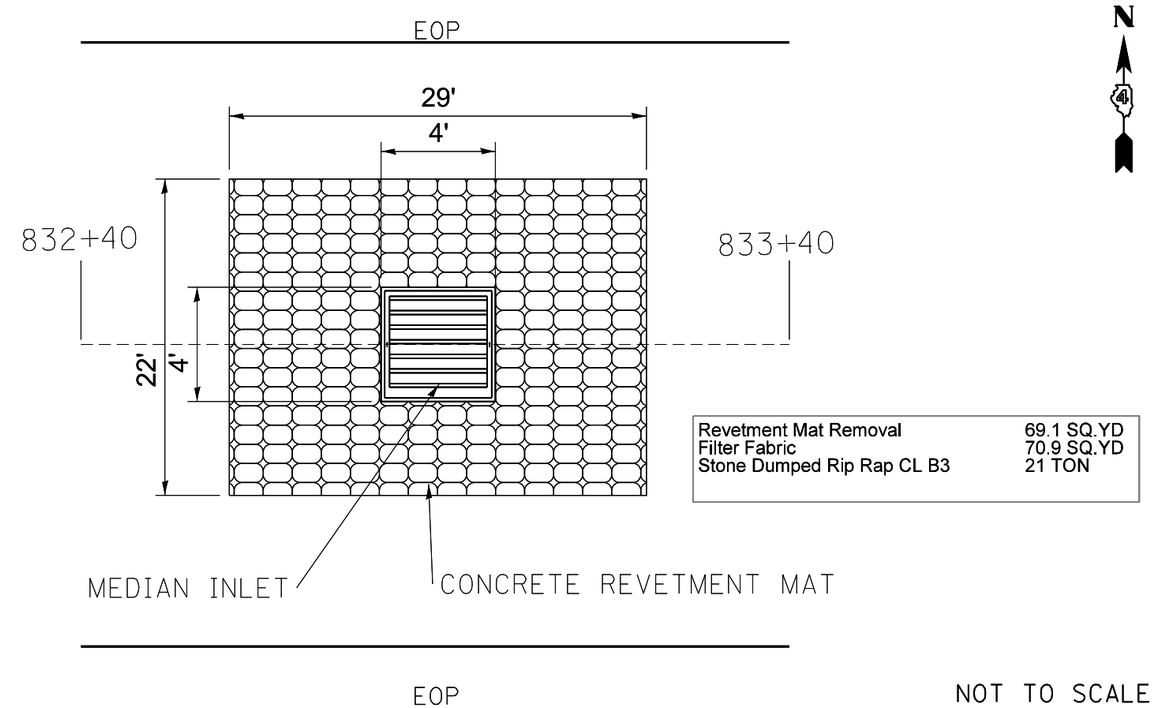

Revetment Mat Removal	69.1 SQ.YD
Filter Fabric	70.9 SQ.YD
Stone Dumped Rip Rap CL B3	21 TON

NOT TO SCALE

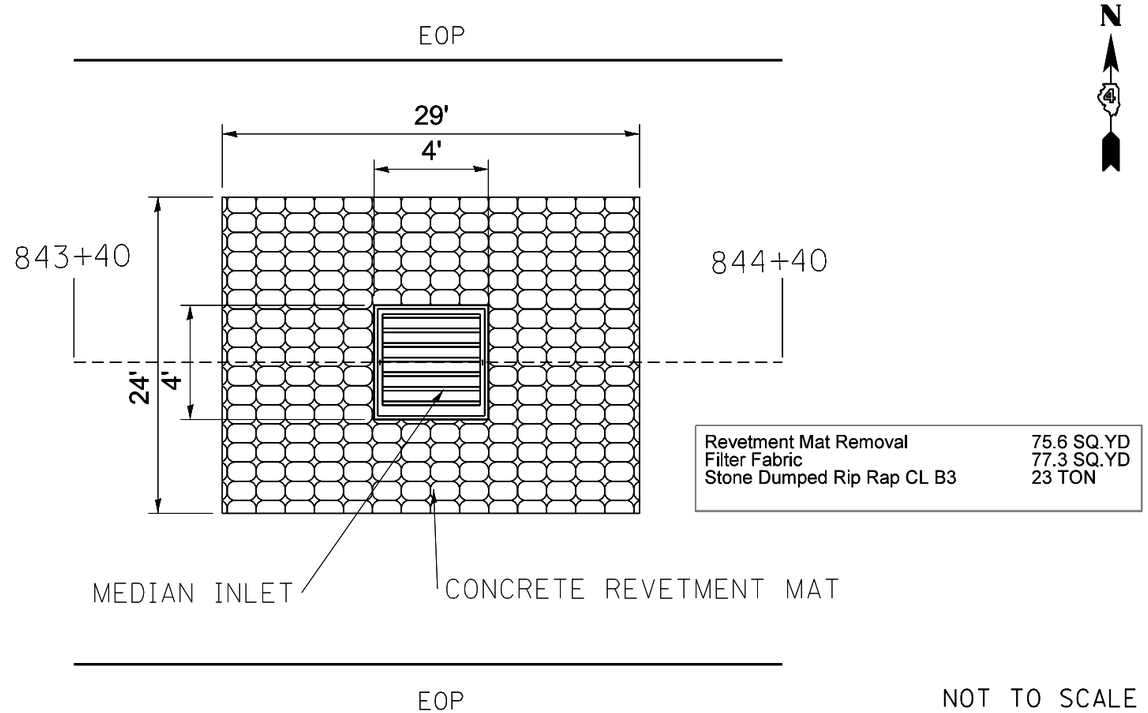

Revetment Mat Removal	75.6 SQ.YD
Filter Fabric	77.3 SQ.YD
Stone Dumped Rip Rap CL B3	23 TON

NOT TO SCALE

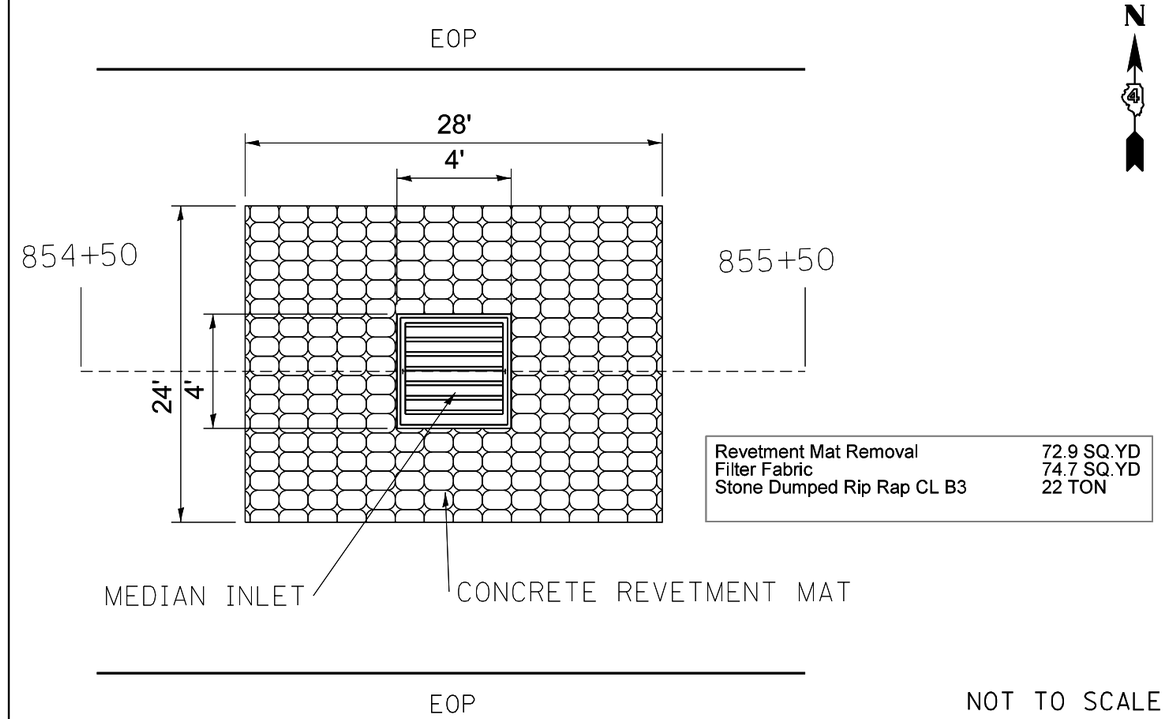

Revetment Mat Removal	72.9 SQ.YD
Filter Fabric	74.7 SQ.YD
Stone Dumped Rip Rap CL B3	22 TON

NOT TO SCALE

MODEL: Default
FILE NAME: C:\Users\aubreygs\Desktop\68339\D468339-plans.dgn

USER NAME = aubreygs	DESIGNED -	REVISED -
	DRAWN -	REVISED -
PLOT SCALE = 200.0000 ' / in.	CHECKED -	REVISED -
PLOT DATE = 12/15/2017	DATE -	REVISED -

STATE OF ILLINOIS
DEPARTMENT OF TRANSPORTATION

PROPOSED PLAN
DRAINAGE DETAILS

SCALE: | SHEET OF SHEETS | STA. TO STA.

F.A.P RTE.	SECTION	COUNTY	TOTAL SHEETS	SHEET NO.
313	94(16,16-1,17)RS,48(17,18)RS	WARREN/KNOX	118	44
RTE US 34/IL 110		CONTRACT NO. 68339		
		ILLINOIS	FED. AID PROJECT	

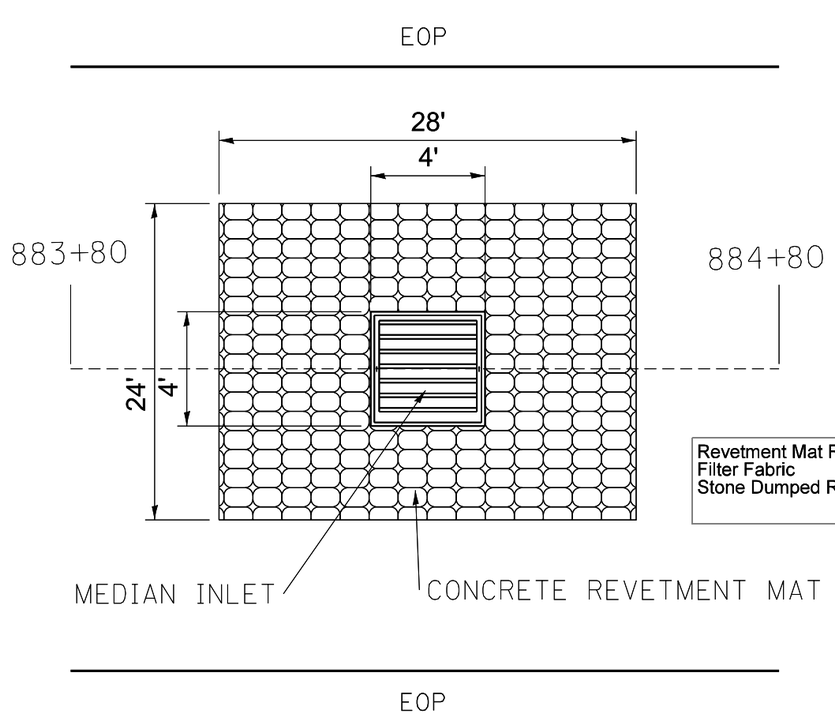

Revetment Mat Removal	72.9 SQ.YD
Filter Fabric	74.7 SQ.YD
Stone Dumped Rip Rap CL B3	22 TON

NOT TO SCALE

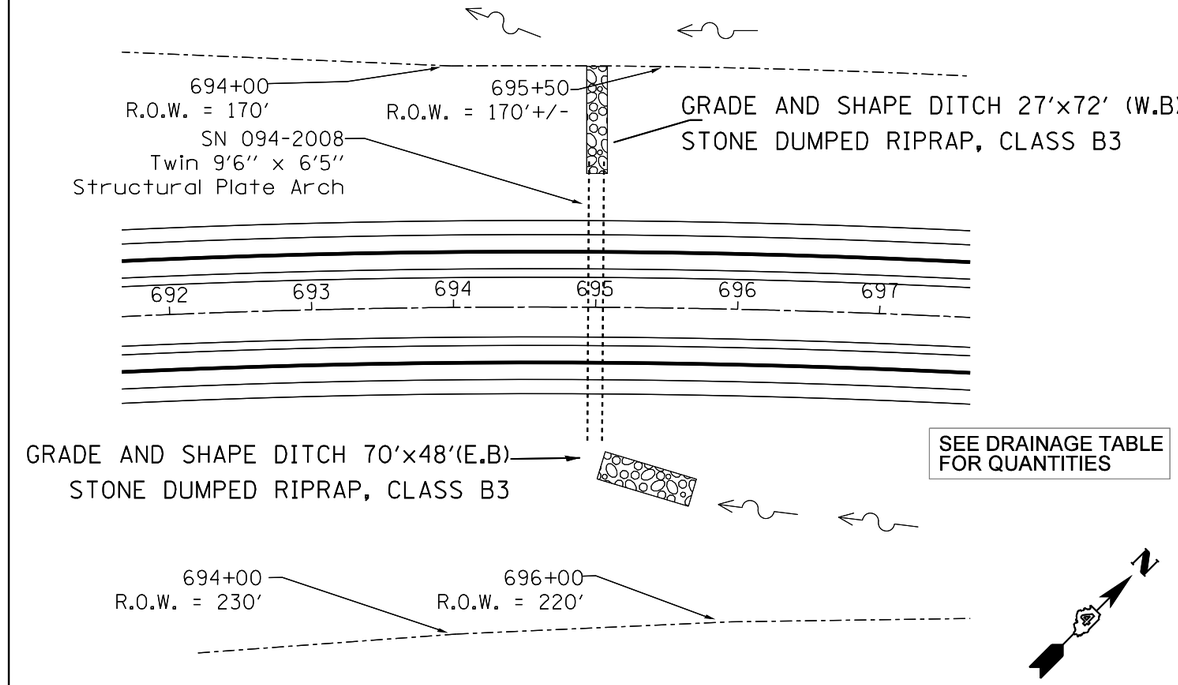

SEE DRAINAGE TABLE FOR QUANTITIES

NOT TO SCALE

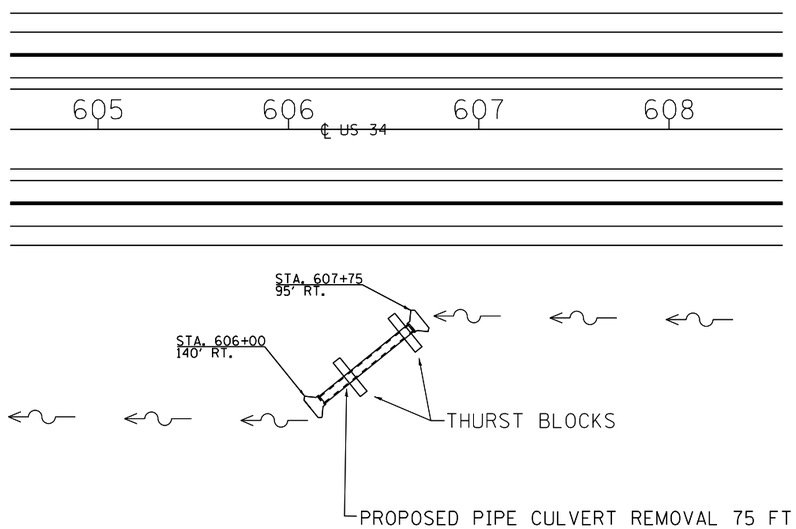

SEE RIPRAP DITCH EROSION PROTECTION DETAIL (CASE I)
FOR CALCULATED QUANTITIES

R.O.W. = 250'

EXISTING

NOT TO SCALE

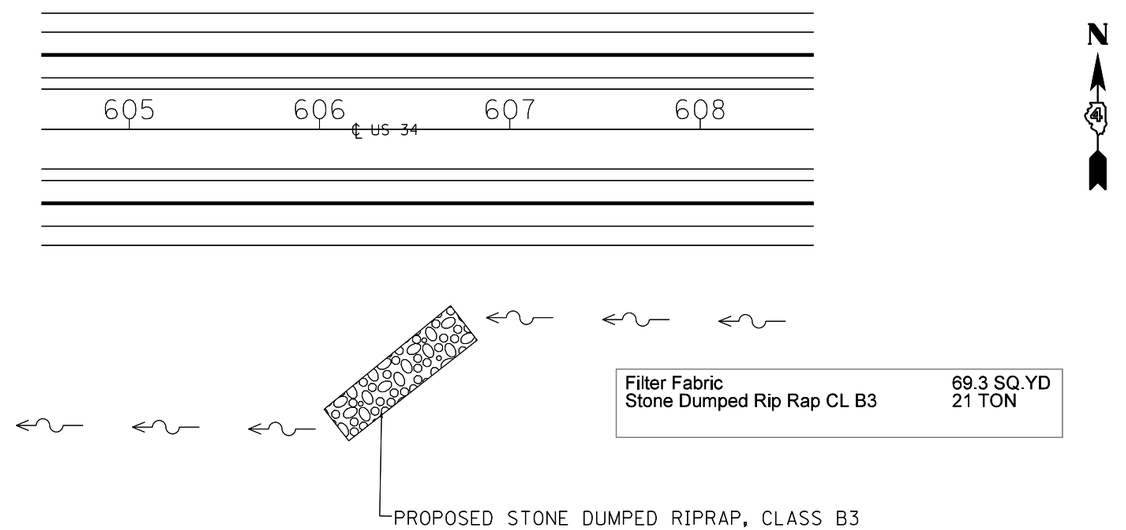

Filter Fabric	69.3 SQ.YD
Stone Dumped Rip Rap CL B3	21 TON

PROPOSED STONE DUMPED RIPRAP, CLASS B3

R.O.W. = 250'

PROPOSED

NOT TO SCALE

MODEL: Default
FILE NAME: C:\Users\aubreygs\Desktop\68339\D468339-plans.dgn

USER NAME = aubreygs	DESIGNED -	REVISED -
	DRAWN -	REVISED -
PLOT SCALE = 200.0000 ' / in.	CHECKED -	REVISED -
PLOT DATE = 12/15/2017	DATE -	REVISED -

STATE OF ILLINOIS
DEPARTMENT OF TRANSPORTATION

PROPOSED PLAN
DRAINAGE DETAILS

SCALE: | SHEET OF SHEETS | STA. TO STA.

F.A.P RTE.	SECTION	COUNTY	TOTAL SHEETS	SHEET NO.
313	94(16,16-1,17)RS,48(17,18)RS	WARREN/KNOX	118	45
RTE US 34/IL 110		CONTRACT NO. 68339		
		ILLINOIS	FED. AID PROJECT	

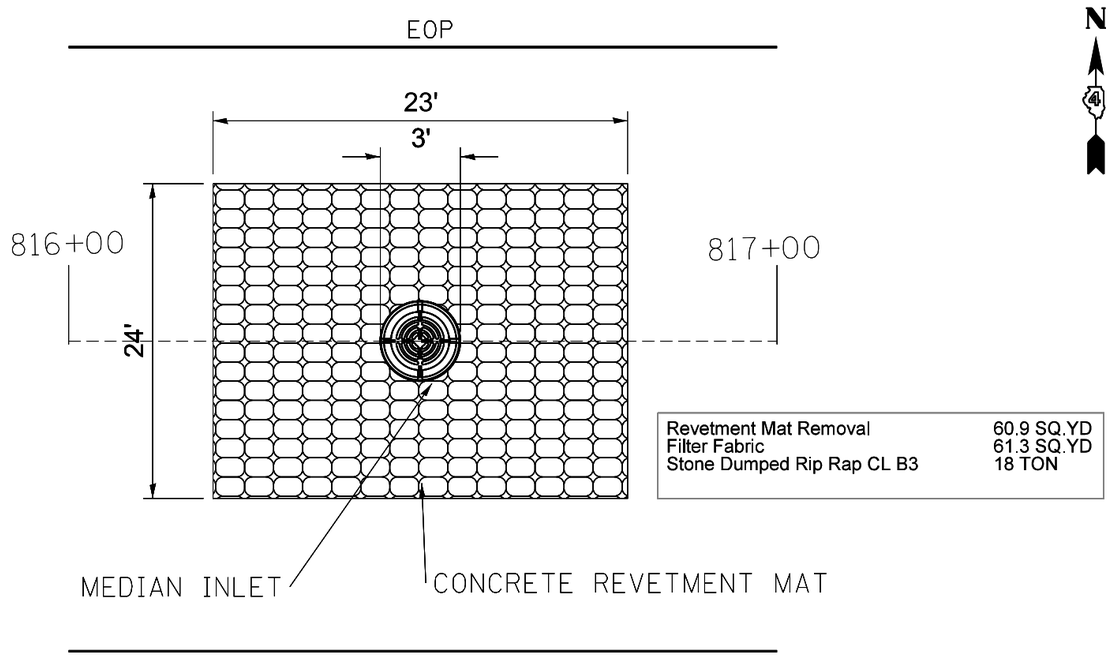

Revetment Mat Removal	60.9 SQ.YD
Filter Fabric	61.3 SQ.YD
Stone Dumped Rip Rap CL B3	18 TON

NOT TO SCALE

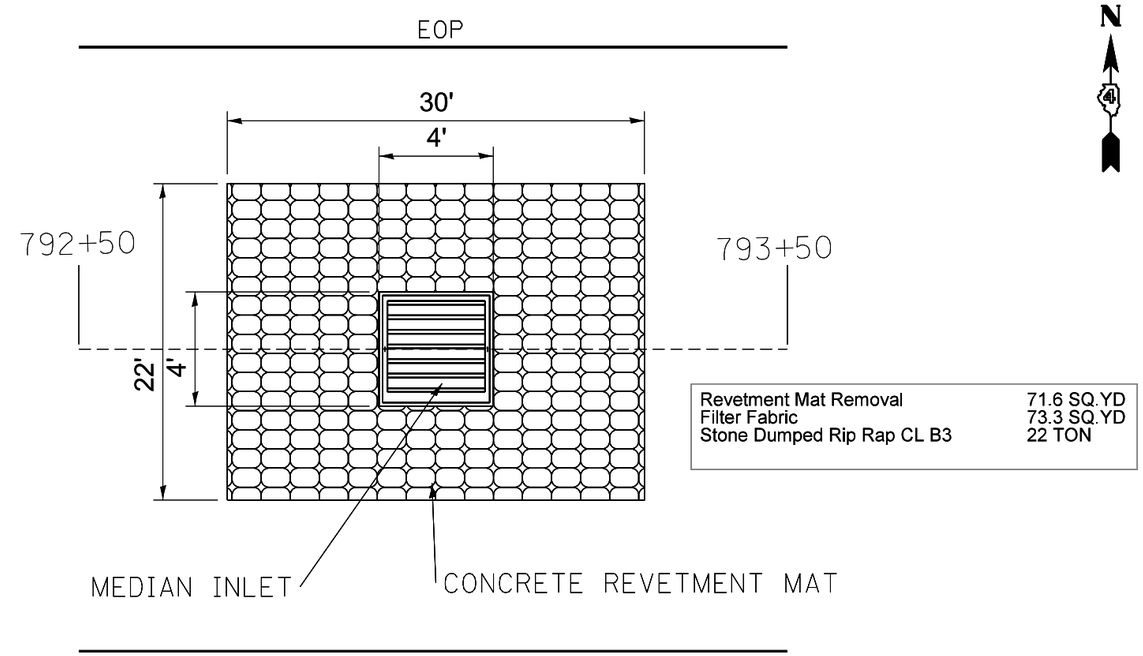

Revetment Mat Removal	71.6 SQ.YD
Filter Fabric	73.3 SQ.YD
Stone Dumped Rip Rap CL B3	22 TON

NOT TO SCALE

MODEL: Default
FILE NAME: C:\Users\aubreygs\Desktop\68339\D468339-plans.dgn

USER NAME = aubreygs	DESIGNED -	REVISED -	
	DRAWN -	REVISED -	
PLOT SCALE = 200.0000 ' / in.	CHECKED -	REVISED -	
PLOT DATE = 12/15/2017	DATE -	REVISED -	

STATE OF ILLINOIS
DEPARTMENT OF TRANSPORTATION

PROPOSED PLAN
DRAINAGE DETAILS

SCALE: SHEET OF SHEETS STA. TO STA.

F.A.P RTE.	SECTION	COUNTY	TOTAL SHEETS	SHEET NO.
313	94(16,16-1,17)RS,48(17,18)RS	WARREN/KNOX	118	46
RTE US 34/IL 110		CONTRACT NO. 68339		
		ILLINOIS	FED. AID PROJECT	

CASE 1
(DITCH)

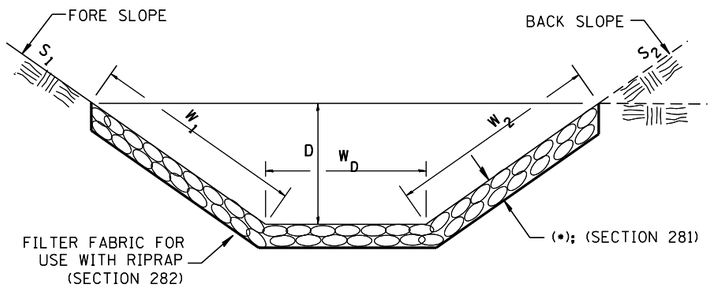

(✳)				
LOCATION	WIDTH (1)	LENGTH	RIPRAP CL B3	FABRIC
STA TO STA	lin ft (m)	lin ft (m)	tons (m tons)	sq yds (m^2)
606+00 TO 607+75	20	75	50	167
E. BOUND US 34				
TOTAL			50	167

(1) WIDTH = $W_1 + W_2 + W_D$

CASE 2
(CULVERT & SLOPE)

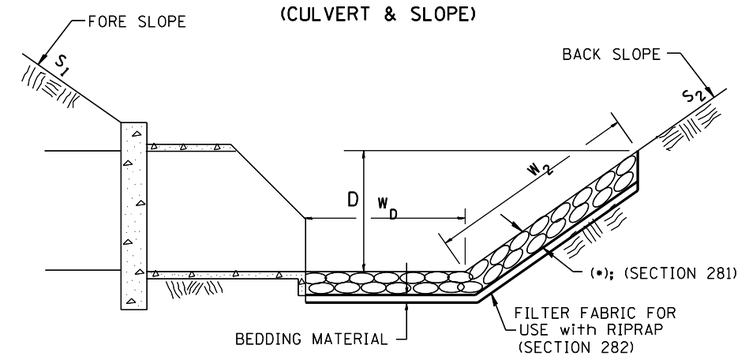

(✳)				
LOCATION	WIDTH (1)	LENGTH	RIPRAP	FABRIC
STA TO STA	lin ft (m)	lin ft (m)	tons (m tons)	sq yds (m^2)
TOTAL				

(1) WIDTH = $W_2 + W_D$

CASE 3
(CULVERT)

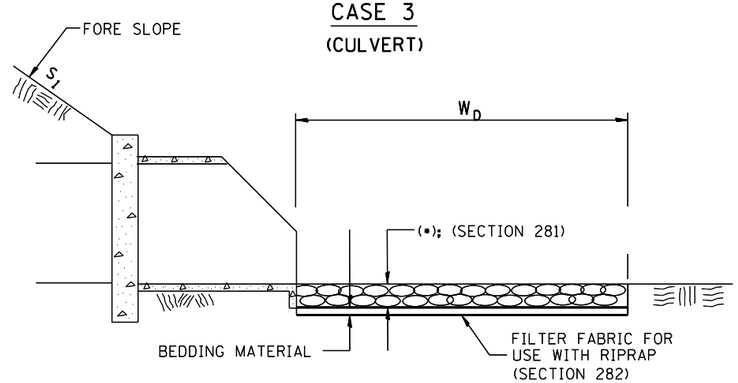

(✳)				
LOCATION	WIDTH (1)	LENGTH	RIPRAP	FABRIC
STA TO STA	lin ft (m)	lin ft (m)	tons (m tons)	sq yds (m^2)
TOTAL				

(1) WIDTH = W_D

All slope ratios are expressed as units of vertical displacement to units of horizontal displacement (V:H).

All dimensions are in inches (millimeters) unless otherwise noted.

1-1-97	RENUM. A-12.02, NEW REVISION BOX	T.P.
12-1-97	CORRECT FILTER FABRIC LEADER ARROW	J.A.
10-16-06	REVISED TO 2007 SPEC.	M.A.
9-6-12	REMOVED A DESIGNER NOTE AND MADE MINOR CHANGES	R.D.

STATE OF ILLINOIS
DEPARTMENT OF TRANSPORTATION

RIPRAP DITCH FOR EROSION PROTECTION DETAIL

NOT TO SCALE

FAP	SECTION	COUNTY	TOTAL SHEETS	SHEET NO.
313	94(16,16-1,17)RS,48(17,18)RS	Warren/Knox	118	47
RTE US 34/IL 110		CONTRACT NO. 68339		
FED. ROAD DIST. NO.	ILLINOIS	FED. AID PROJECT		

CONSTRUCTION NOTES
1. ANY MAINTENANCE OF EXISTING LIGHTING WILL BE CONSIDERED EXTRA WORK IN ACCORDANCE WITH ARTICLE 109.04 OF THE STANDARD SPECIFICATIONS.
2. THE LOCATION OF ALL UTILITIES AND PRIVATELY OWNED FACILITIES SHALL BE FIELD VERIFIED BY THE CONTRACTOR PRIOR TO THE INSTALLATION OF ANY COMPONENTS.
3. THE CONTRACTOR SHALL BE RESPONSIBLE FOR LOCATING EXISTING IDOT ELECTRICAL FACILITIES AT HIS/HER OWN EXPENSE IF REQUIRED. THE CONTRACTOR SHALL ALSO BE LIABLE FOR ANY DAMAGE TO IDOT FACILITIES RESULTING FROM INACCURATE LOCATING.
4. ELECTRICAL WORK SHALL CONFORM WITH NATIONAL, STATE, AND LOCAL CODES.
5. THE EXISTING LIGHTING SHALL REMAIN IN OPERATION DURING THE CONSTRUCTION OF THE PROPOSED LIGHTING.
6. ALL LIGHT POLES SHALL BE BONDED IN ACCORDANCE WITH NEC REQUIREMENTS. THIS WORK SHALL BE INCLUDED IN THE COST OF THE PROPOSED LIGHT POLES.
7. ALL SURPLUS MATERIALS SHALL BE DISPOSED OF IN ACCORDANCE WITH ARTICLE 202.03 OF THE STANDARD SPECIFICATIONS.
8. THE CONTRACTOR SHALL BE RESPONSIBLE FOR VERIFYING THE EXISTING FIELD CONDITIONS, LIGHT POLE BOLT CIRCLES, AND LUMINAIRE VOLTAGE PRIOR TO ORDERING MATERIALS. THIS WORK SHALL BE INCLUDED IN THE PRICE OF THE PROPOSED LIGHT POLES AND LUMINAIRES.
9. THE CONTRACTOR SHALL REMOVE THE EXISTING LIGHT POLES AND LUMINAIRES AND DISPOSE OF THEM OFF OF THE JOB SITE. THIS WORK SHALL BE INCLUDED IN THE PRICE OF THE PROPOSED LIGHT POLES. THE CONTRACTOR SHALL REFLECT THE SALVAGE VALUE OF THE LIGHT POLES AND LUMINAIRES
10. THE CONTRACTOR SHALL FURNISH AND INSTALL NEW #10 LUMINAIRE WIRING, SURGE ARRESTORS (SUITABLE FOR USE WITH LED FIXTURES), FUSE HOLDERS, FUSES, AND ALL OTHER ITEMS REQUIRED FOR THE LIGHT POLE INSTALLATION. THE COST OF THIS WORK SHALL BE INCLUDED IN THE BID PRICE FOR THE PROPOSED LUMINARES.
11. THE CONTRACTOR SHALL INSTALL JAM NUTS ON THE BOTTOM OF ALL METAL LIGHT POLE FOUNDATIONS WHEN INSTALLING THE PROPOSED BREAKAWAY COUPLINGS. THE COST OF THIS WORK SHALL BE INCLUDED IN THE COST OF THE PROPOSED BREAKAWAY COUPLINGS.

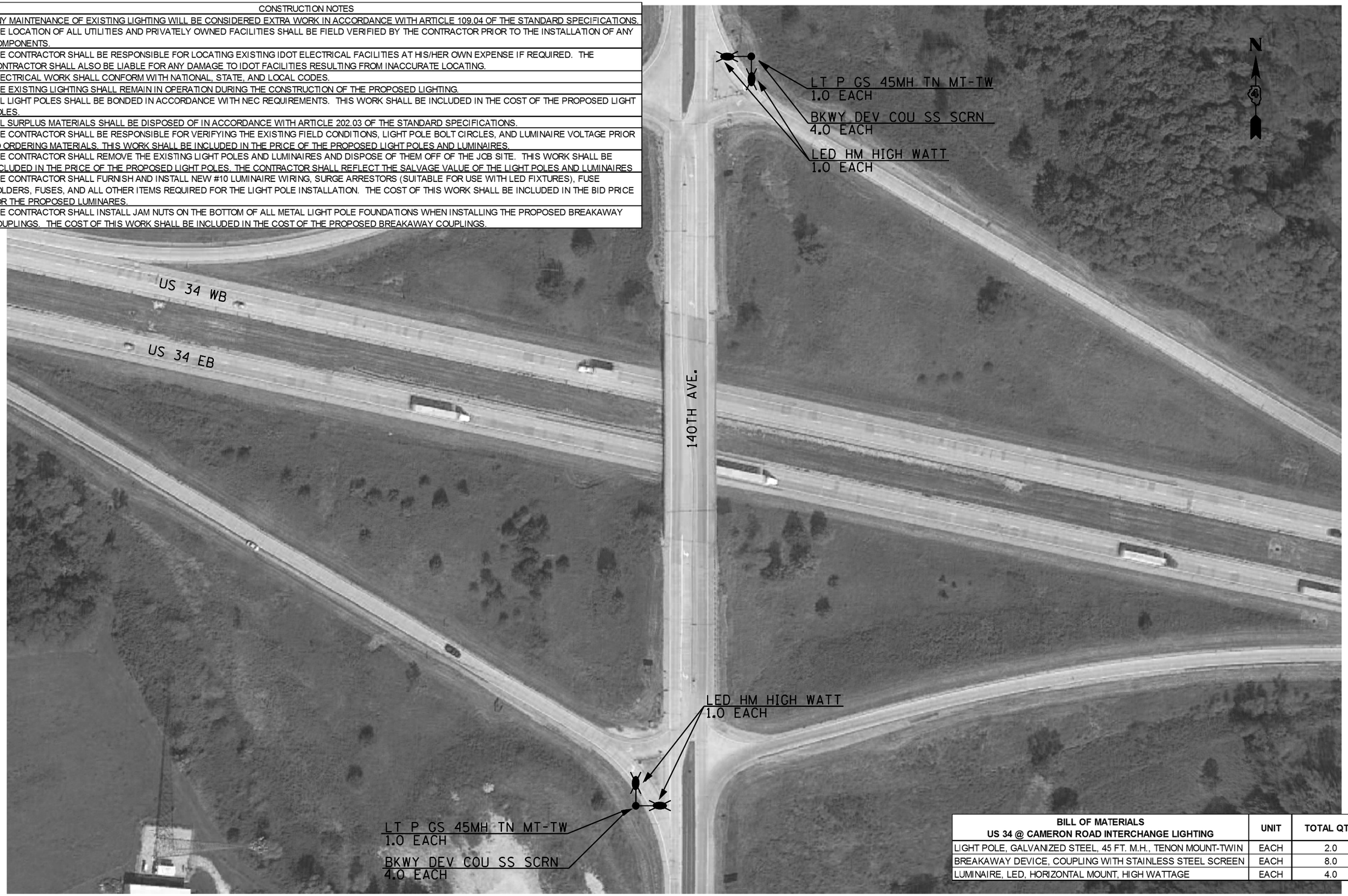

BILL OF MATERIALS US 34 @ CAMERON ROAD INTERCHANGE LIGHTING	UNIT	TOTAL QTY.
LIGHT POLE, GALVANIZED STEEL, 45 FT. M.H., TENON MOUNT-TWIN	EACH	2.0
BREAKAWAY DEVICE, COUPLING WITH STAINLESS STEEL SCREEN	EACH	8.0
LUMINAIRE, LED, HORIZONTAL MOUNT, HIGH WATTAGE	EACH	4.0

FILE NAME = C:\Users\aubreygs\Desktop\68339\D468339-plans.dgn	USER NAME = aubreygs	DESIGNED -	REVISED -
		DRAWN -	REVISED -
	PLOT SCALE = 200.0000 ' / in.	CHECKED -	REVISED -
	PLOT DATE = 12/15/2017	DATE -	REVISED -

STATE OF ILLINOIS
DEPARTMENT OF TRANSPORTATION

PROPOSED LIGHT POLE AND LUMINAIRE REPLACEMENT
US 34 & CAMERON ROAD INTERCHANGE

SCALE: STA. TO STA.

F.A.P RTE.	SECTION	COUNTY	TOTAL SHEETS	SHEET NO.
313 (US 34 IL 110)	94(16,16-1,17)RS, 48(17,18)RS	WARREN, KNOX	118	48
		CONTRACT NO. 68339		
		ILLINOIS	FED. AID PROJECT	

US 34 WESTBOUND

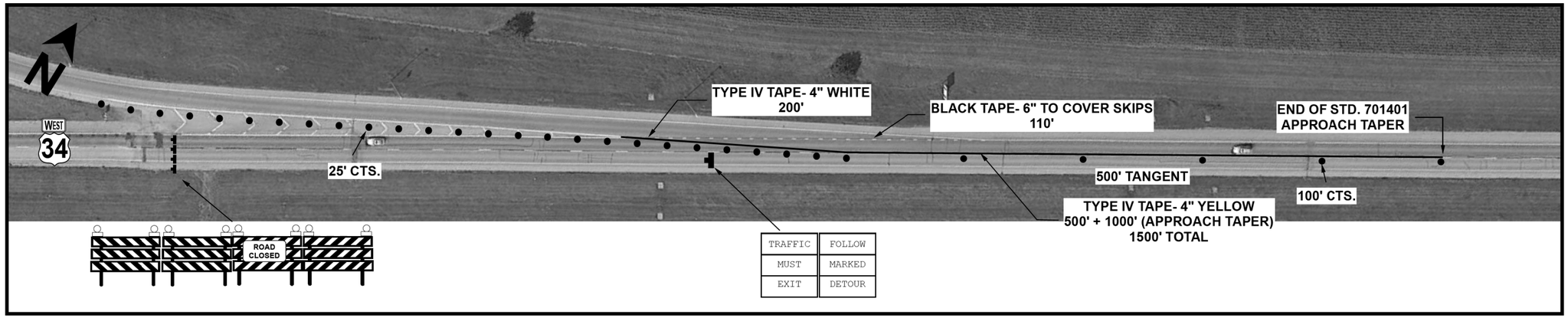

US 34 EASTBOUND

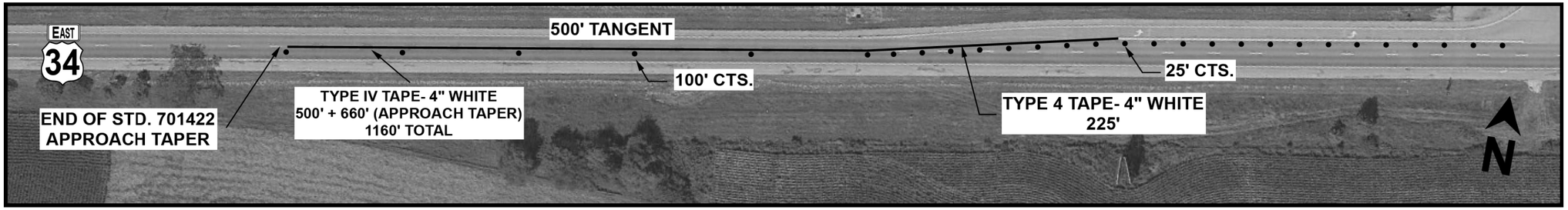

NOTES:

PLACE 2 SIGNS-500' IN
ADVANCE OF APPROACH TAPER
OF US 34 WESTBOUND

STANDARDS 701400, 701401, 701422, AND 701901 SHALL BE UTILIZED
AND AS SHOWN ON TRAFFIC CONTROL DETAIL DRAWINGS.

DRAWINGS ARE NOT TO SCALE. FIELD CONDITIONS
WILL DICTATE ACTUAL LAYOUT AND PLACEMENT OF TRAFFIC CONTROL.

not to scale

MODEL: Default
FILE NAME: pw:\\IL084EBIDNTEC.illinois.gov:PWIDOT\Documents\IDOT Offices\District 4\Projects\D4_68339\CADData\CADdrawings\alignment.dgn

USER NAME = keithbr	DESIGNED -	REVISED -	STATE OF ILLINOIS DEPARTMENT OF TRANSPORTATION
	DRAWN -	REVISED -	
PLOT SCALE = 0.1000 ' / in.	CHECKED -	REVISED -	
PLOT DATE = 12/15/2017	DATE -	REVISED -	

US 34 DETOUR SHEETS
SHEET 1 OF 3

SCALE: SHEET OF SHEETS STA. TO STA.

F.A.P.	SECTION	COUNTY	TOTAL SHEETS	SHEET NO.
313	94(16,17)RS,48(17,18)RS	WARREN-KNOX	118	49
RTE US 34/IL 110		CONTRACT NO. 68339		
		ILLINOIS	FED. AID PROJECT	

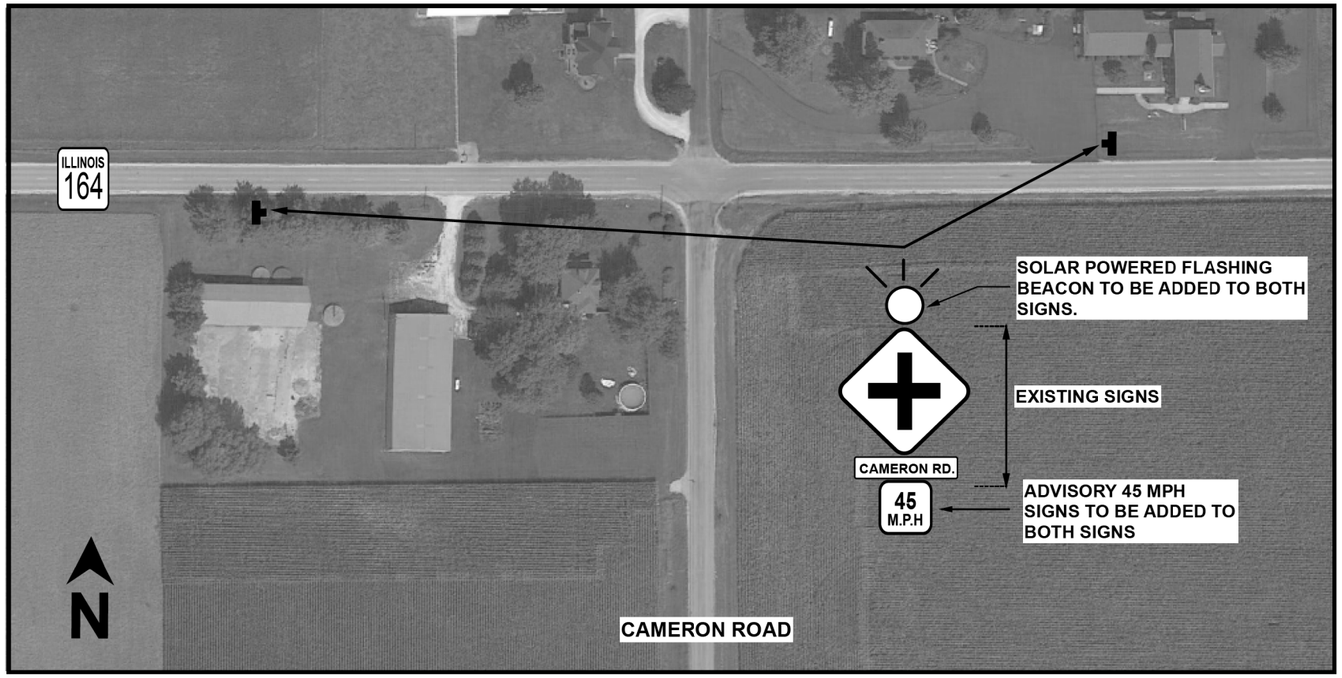

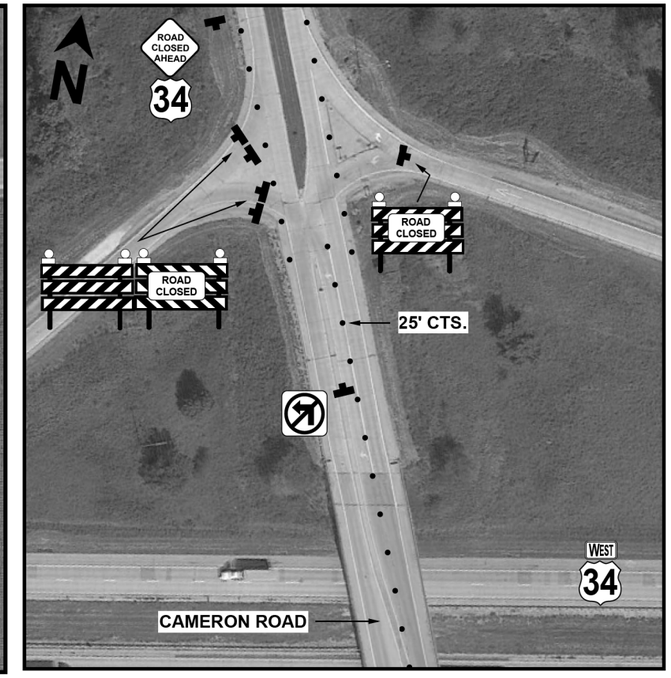

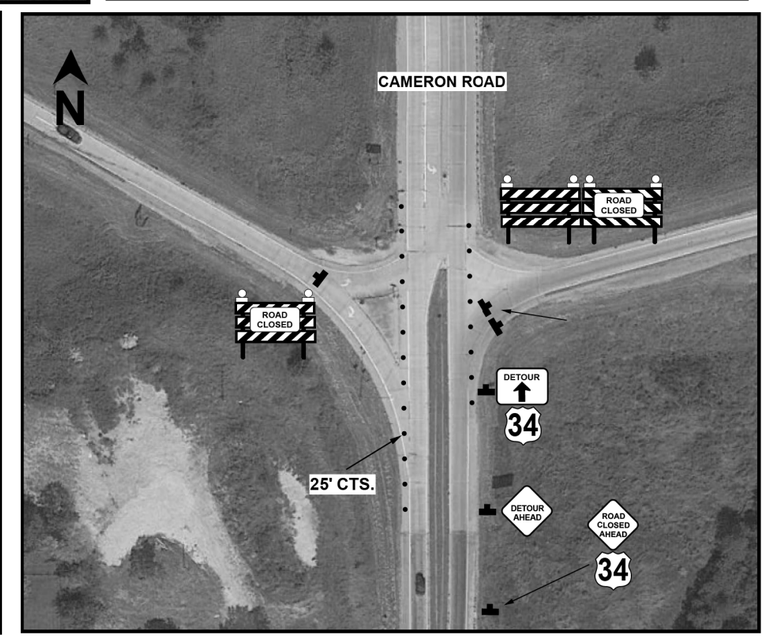

not to scale

MODEL: Default
FILE NAME: pw:\\IL084EBIDINTEG.illinois.gov:PWIDOT\Documents\IDOT Offices\District 4\Projects\D4 68339\CADData\CADdrawings\alignment.dgn

USER NAME = keithbr	DESIGNED -	REVISED -	
	DRAWN -	REVISED -	
PLOT SCALE = 0.1000 ' / in.	CHECKED -	REVISED -	
PLOT DATE = 12/15/2017	DATE -	REVISED -	

STATE OF ILLINOIS
DEPARTMENT OF TRANSPORTATION

US 34 DETOUR SHEETS
SHEET 2 OF 3

SCALE: | SHEET OF SHEETS | STA. TO STA.

F.A.P.	SECTION	COUNTY	TOTAL SHEETS	SHEET NO.
313	94(16,17)RS,48(17,18)RS	WARREN-KNOX	118	50
RTE US 34/IL 110		CONTRACT NO. 68339		
		ILLINOIS	FED. AID PROJECT	

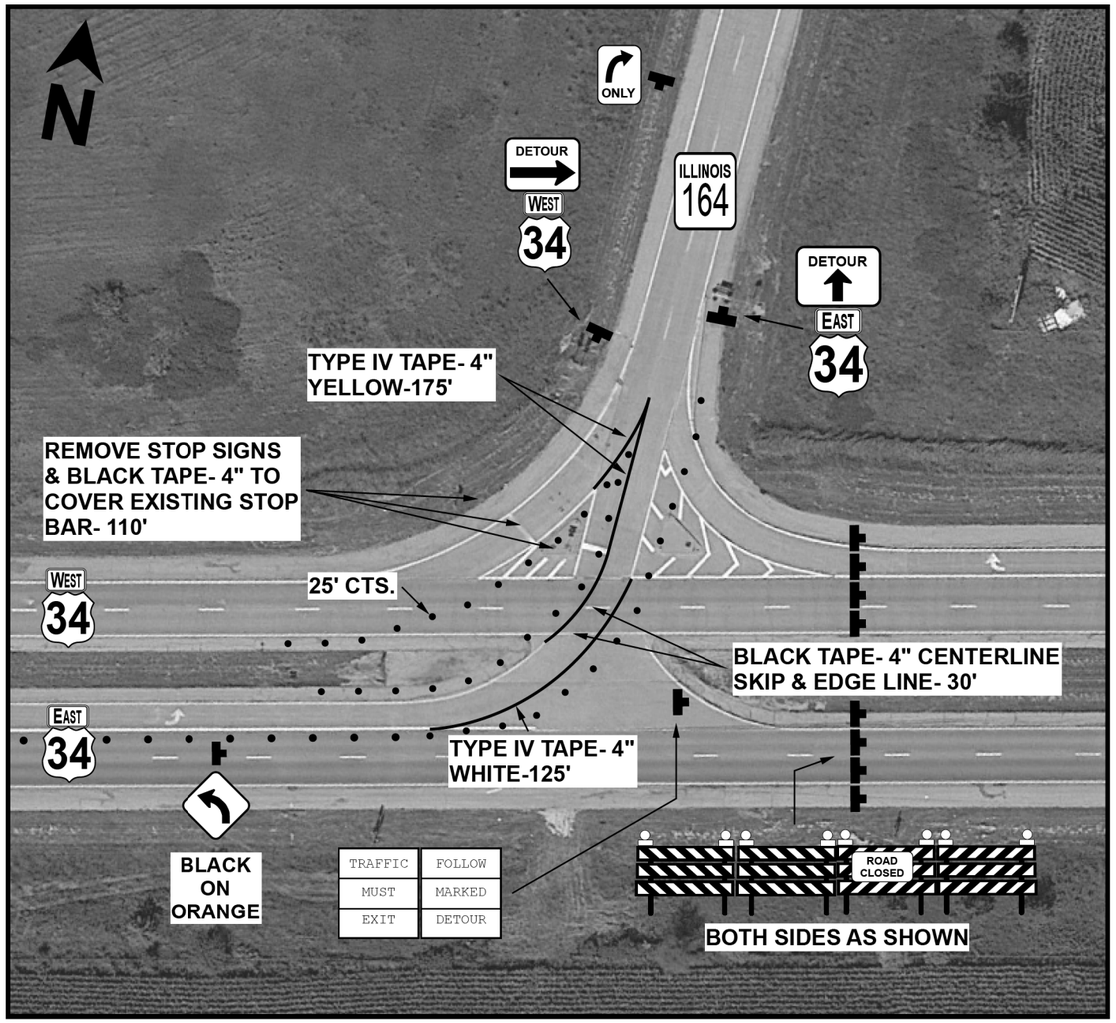

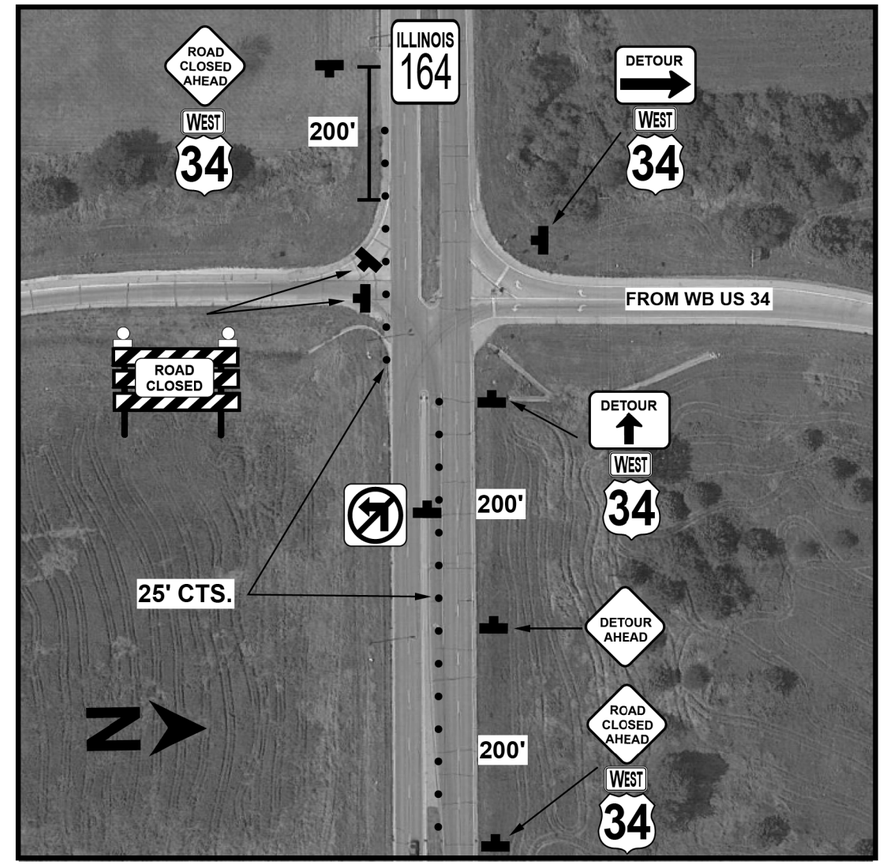

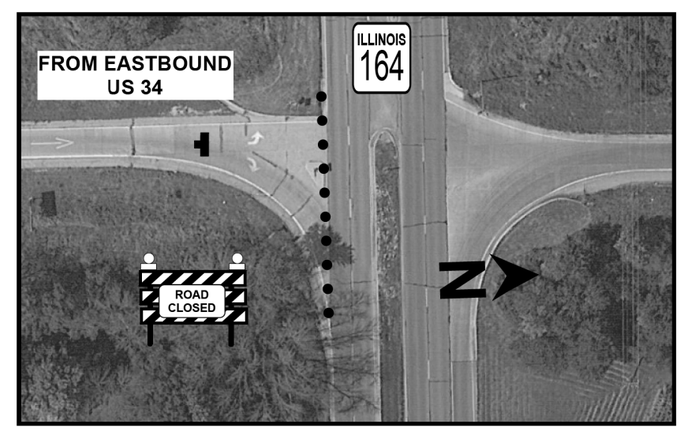

not to scale

USER NAME = keithbr	DESIGNED -	REVISED -	
	DRAWN -	REVISED -	
PLOT SCALE = 0.1000 ' / in.	CHECKED -	REVISED -	
PLOT DATE = 12/15/2017	DATE -	REVISED -	

STATE OF ILLINOIS
DEPARTMENT OF TRANSPORTATION

US 34 DETOUR SHEETS
SHEET 3 OF 3

SCALE: SHEET OF SHEETS STA. TO STA.

F.A.P.	SECTION	COUNTY	TOTAL SHEETS	SHEET NO.
313	94(16,17)RS,48(17,18)RS	WARREN-KNOX	118	51
RTE US 34/IL 110		CONTRACT NO. 68339		
		ILLINOIS FED. AID PROJECT		

MODEL: Default
FILE NAME: pw:\\IL084EBIDINTEG.illinois.gov:PWIDOT\Documents\IDOT Offices\District 4\Projects\D4_68339\CAD\Data\CAD\drawings\alignment.dgn

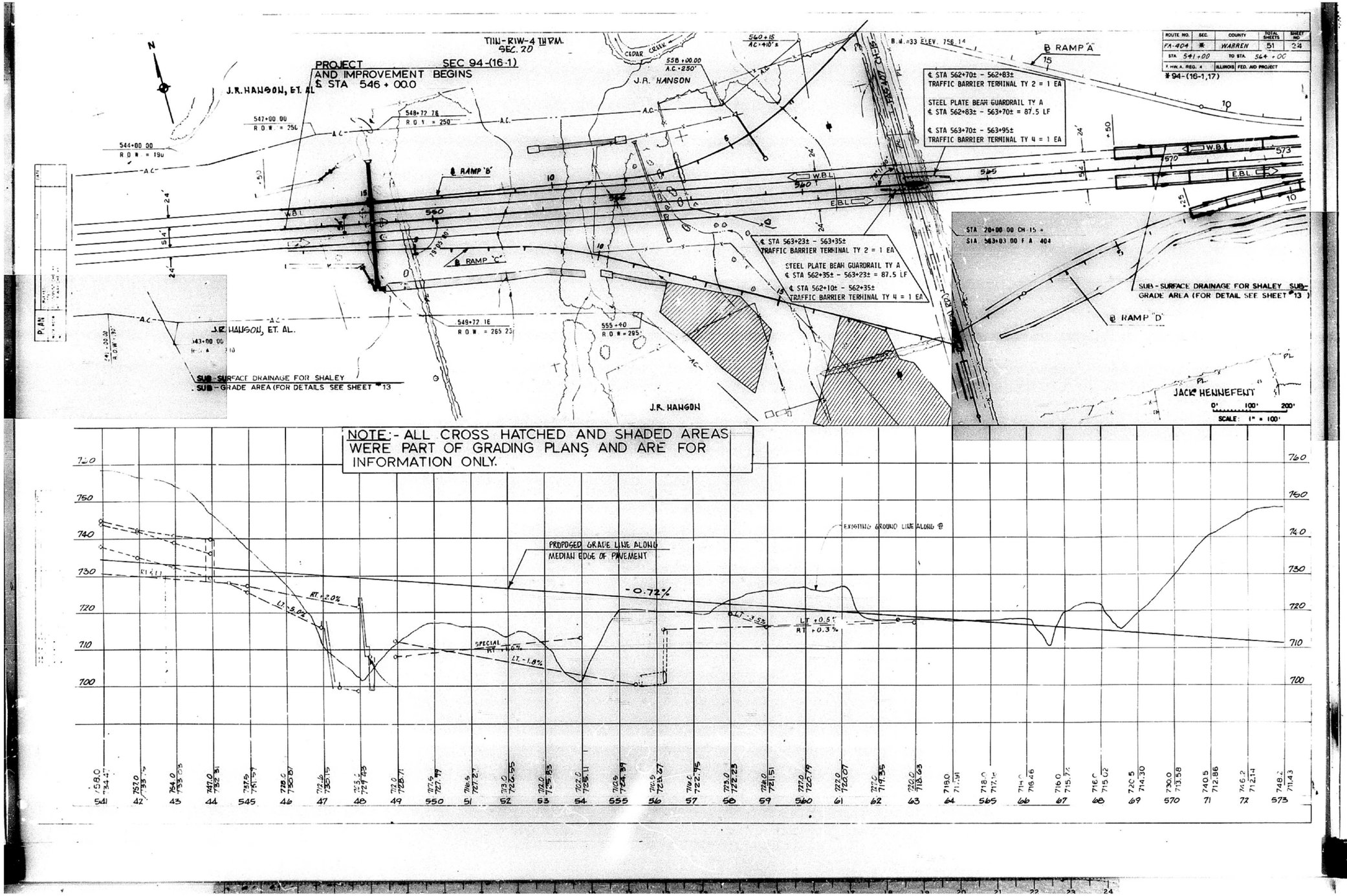

not to scale

USER NAME = keithbr	DESIGNED -	REVISED -
	DRAWN -	REVISED -
PLOT SCALE = 0.1000 ' / in.	CHECKED -	REVISED -
PLOT DATE = 12/15/2017	DATE -	REVISED -

STATE OF ILLINOIS
DEPARTMENT OF TRANSPORTATION

EXISTING PLAN AND PROFILE
FOR INFORMATION ONLY

SCALE: | SHEET OF SHEETS | STA. TO STA.

F.A.P.	SECTION	COUNTY	TOTAL SHEETS	SHEET NO.
313	94(16,17)RS,48(17,18)RS	WARREN-KNOX	118	52
RTE US 34/IL 110		CONTRACT NO. 68339		
		ILLINOIS	FED. AID PROJECT	

MODEL: Default
FILE NAME: pw:\\IL084EBIDNTEG.illinois.gov:PWIDOT\Documents\IDOT Offices\District 4\Projects\D4_68339\CADData\CADdrawings\alignment.dgn

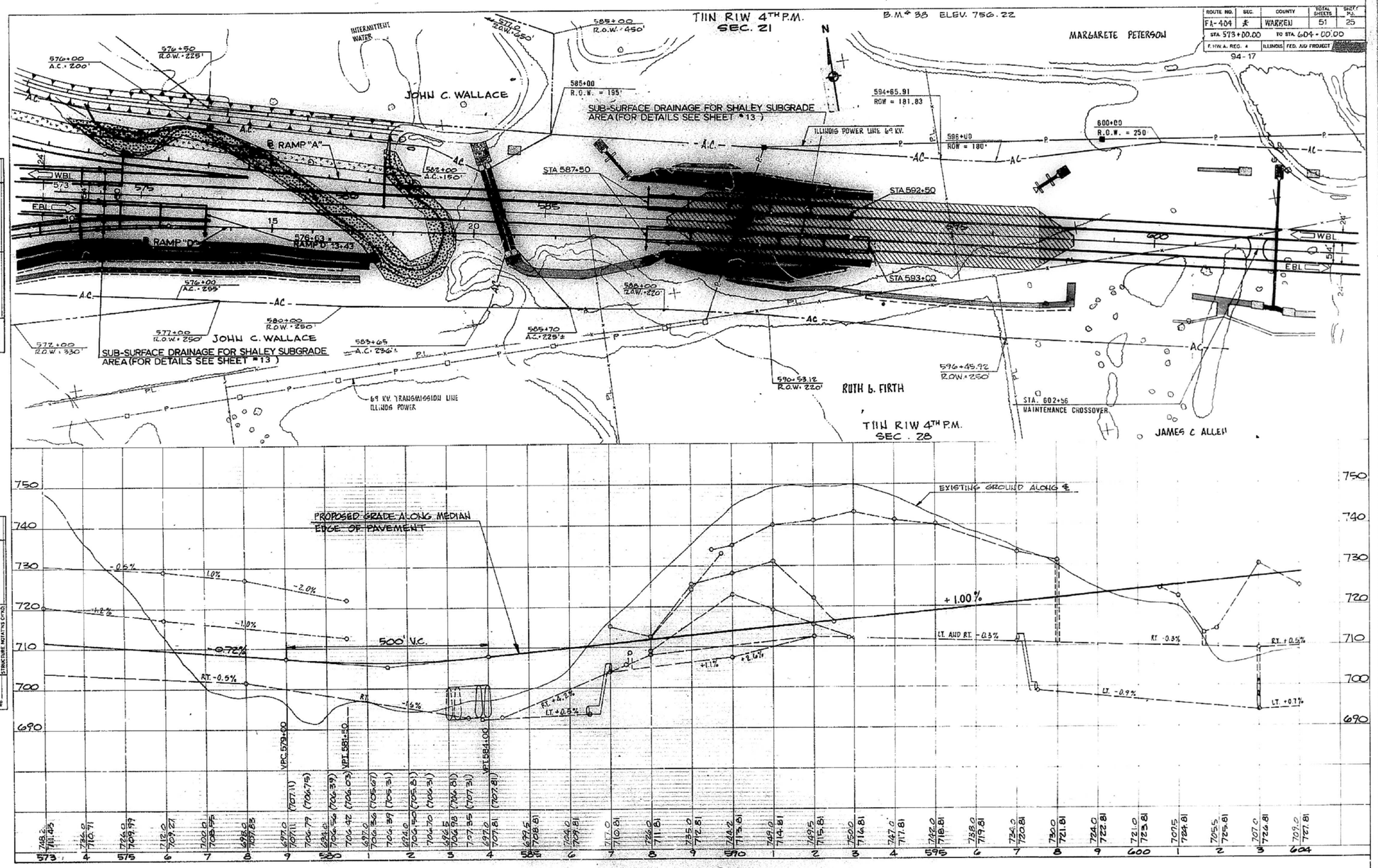

not to scale

ROUTE NO.	SEC.	COUNTY	TOTAL SHEETS	SHEET NO.
FA-404	*	WARREN	51	25
STA 573+00.00		TO STA. 604+00.00		
F.HW.A. REG. 4		ILLINOIS	FED. AID PROJECT	

94-17

USER NAME = keithbr	DESIGNED -	REVISED -
	DRAWN -	REVISED -
PLOT SCALE = 0.1000 ' / in.	CHECKED -	REVISED -
PLOT DATE = 12/15/2017	DATE -	REVISED -

STATE OF ILLINOIS
DEPARTMENT OF TRANSPORTATION

EXISTING PLAN AND PROFILE
FOR INFORMATION ONLY

SCALE: SHEET OF SHEETS STA. TO STA.

F.A.P.	SECTION	COUNTY	TOTAL SHEETS	SHEET NO.
313	94(16,17)RS,48(17,18)RS	WARREN-KNOX	118	53
RTE US 34/IL 110		CONTRACT NO. 68339		
		ILLINOIS	FED. AID PROJECT	

MODEL: Default
FILE NAME: pw:\\IL084EBIDINTEG.illinois.gov:PWIDOT\Documents\IDOT Offices\District 4\Projects\D4_68339\CADData\CADdrawings\alignment.dgn

ROUTE NO.	SEC.	COUNTY	TOTAL SHEETS	SHEET NO.
FA-404	R4-17	WARREN	51	26
STA. 604+00.00		TO STA. 636+00.00		
F. HWY. A. REG. 4		ILLINOIS	FED. AID PROJECT	

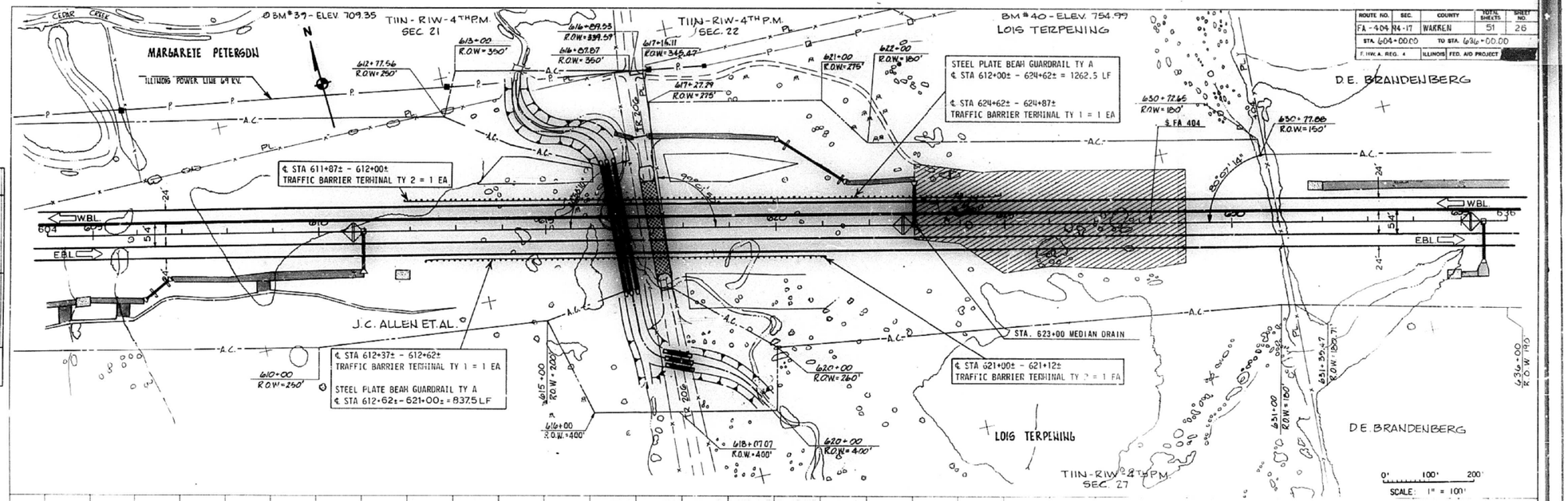

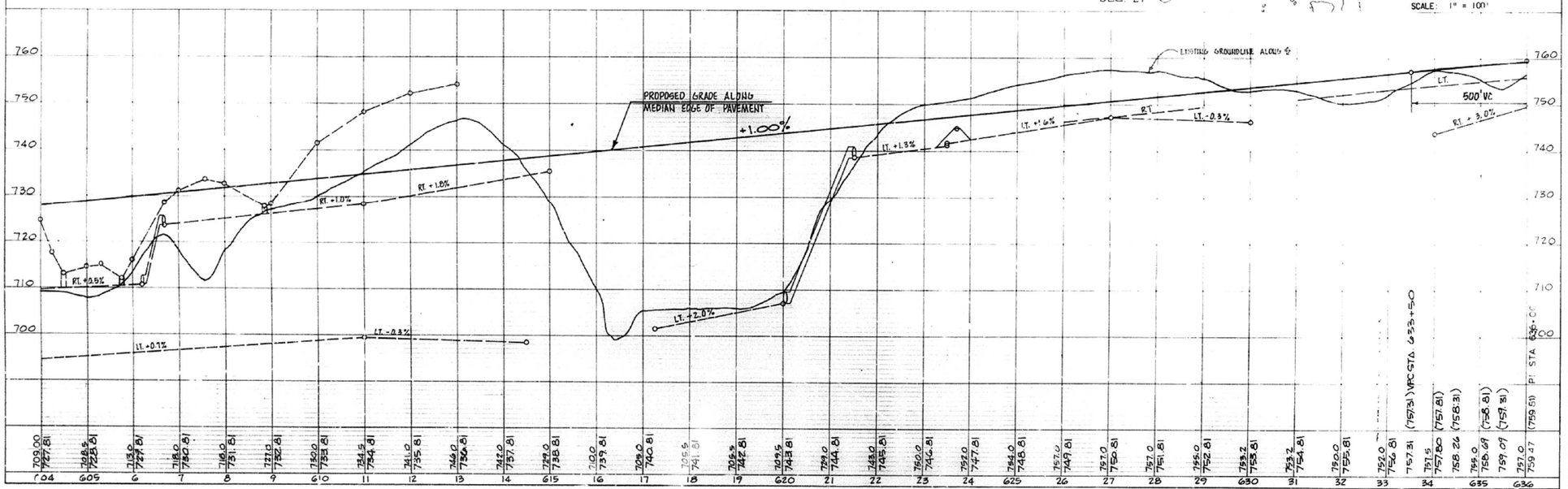

not to scale

USER NAME = keithbr	DESIGNED -	REVISED -	
	DRAWN -	REVISED -	
PLOT SCALE = 0.1000 ' / in.	CHECKED -	REVISED -	
PLOT DATE = 12/15/2017	DATE -	REVISED -	

STATE OF ILLINOIS
DEPARTMENT OF TRANSPORTATION

EXISTING PLAN AND PROFILE
FOR INFORMATION ONLY

SCALE: SHEET OF SHEETS STA. TO STA.

F.A.P.	SECTION	COUNTY	TOTAL SHEETS	SHEET NO.
313	94(16,17)RS,48(17,18)RS	WARREN-KNOX	118	54
RTE US 34/IL 110		CONTRACT NO. 68339		
		ILLINOIS	FED. AID PROJECT	

MODEL: Default
FILE NAME: pw:\\IL084EBI03NTEG.illinois.gov:PWIDOT\Documents\IDOT Offices\District 4\Projects\D4 68339\CADData\CADdrawings\alignment.dgn

ROUTE NO.	SEC.	COUNTY	TOTAL SHEETS	SHEET NO.
FA.-404	194-17	WARREN	51	27
STA. 636+00.00		TO STA. 667+00.00		
F. HWA. REG. 4		ILLINOIS	FED. AID PROJECT	

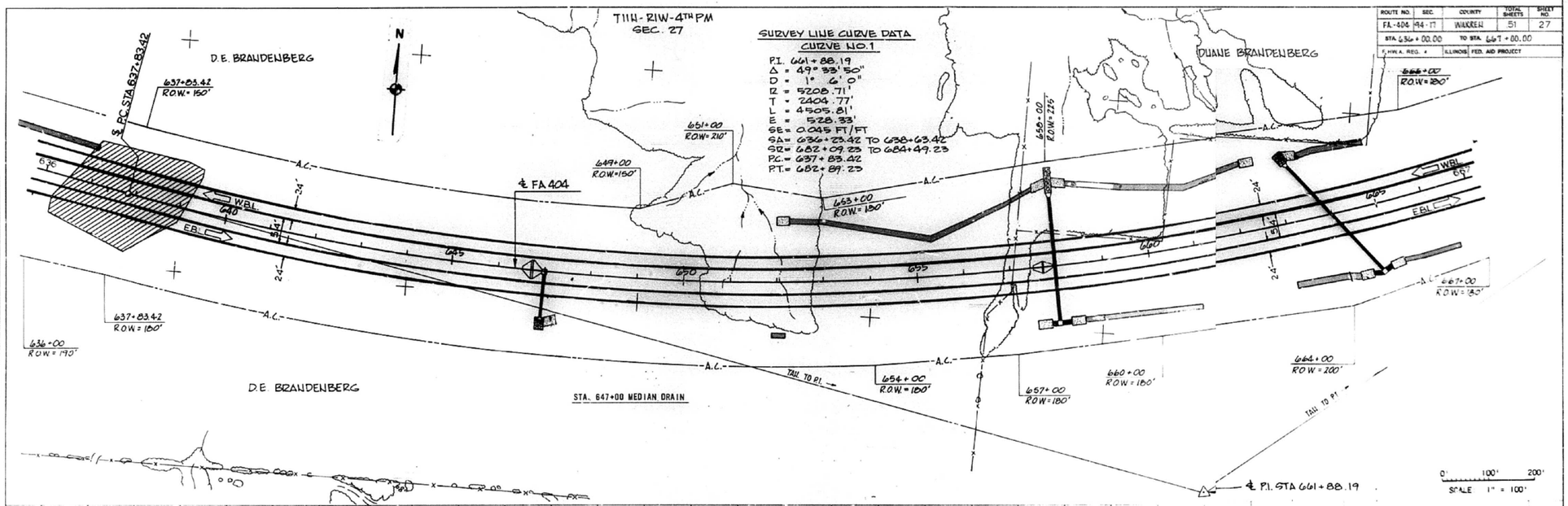

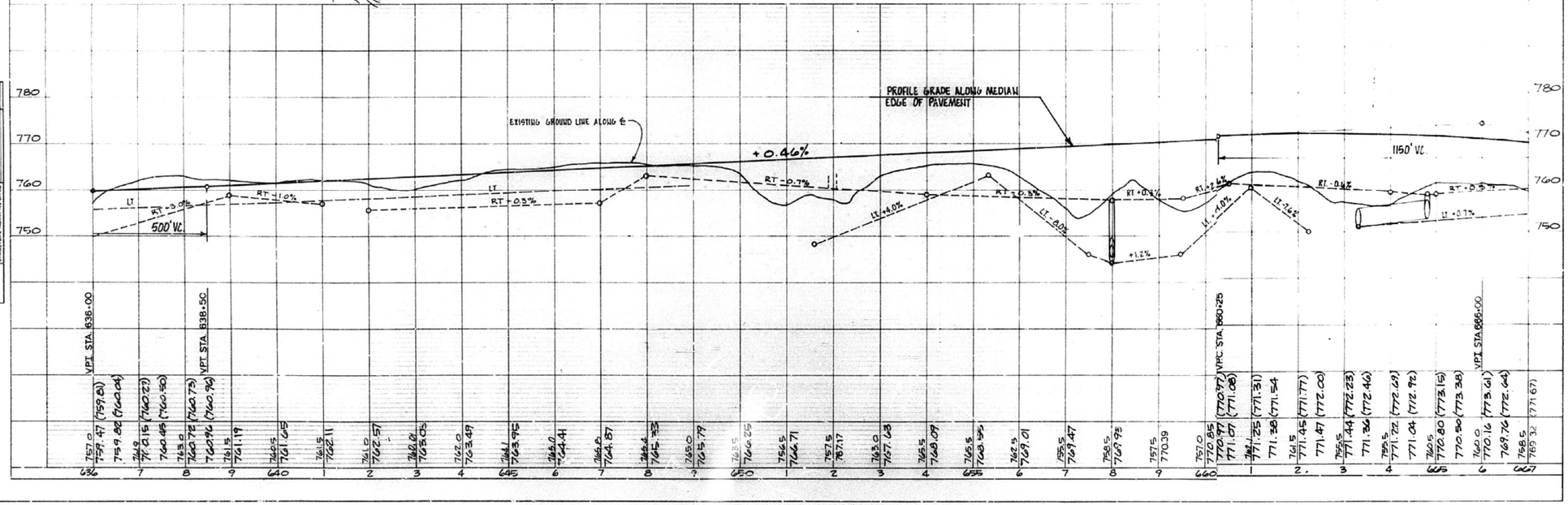

not to scale

USER NAME = keithbr	DESIGNED -	REVISED -
	DRAWN -	REVISED -
PLOT SCALE = 0.1000 ' / in.	CHECKED -	REVISED -
PLOT DATE = 12/15/2017	DATE -	REVISED -

STATE OF ILLINOIS
DEPARTMENT OF TRANSPORTATION

EXISTING PLAN AND PROFILE
FOR INFORMATION ONLY

SCALE: SHEET OF SHEETS STA. TO STA.

F.A.P.	SECTION	COUNTY	TOTAL SHEETS	SHEET NO.
313	94(16,17)RS,48(17,18)RS	WARREN-KNOX	118	55
RTE US 34/IL 110		CONTRACT NO. 68339		
		ILLINOIS	FED. AID PROJECT	

MODEL: Default
FILE NAME: pw:\\IL084EBIDINTEG.illinois.gov:PWIDOT\Documents\IDOT Offices\District 4\Projects\D4 68339\CADData\CADdrawings\alignment.dgn

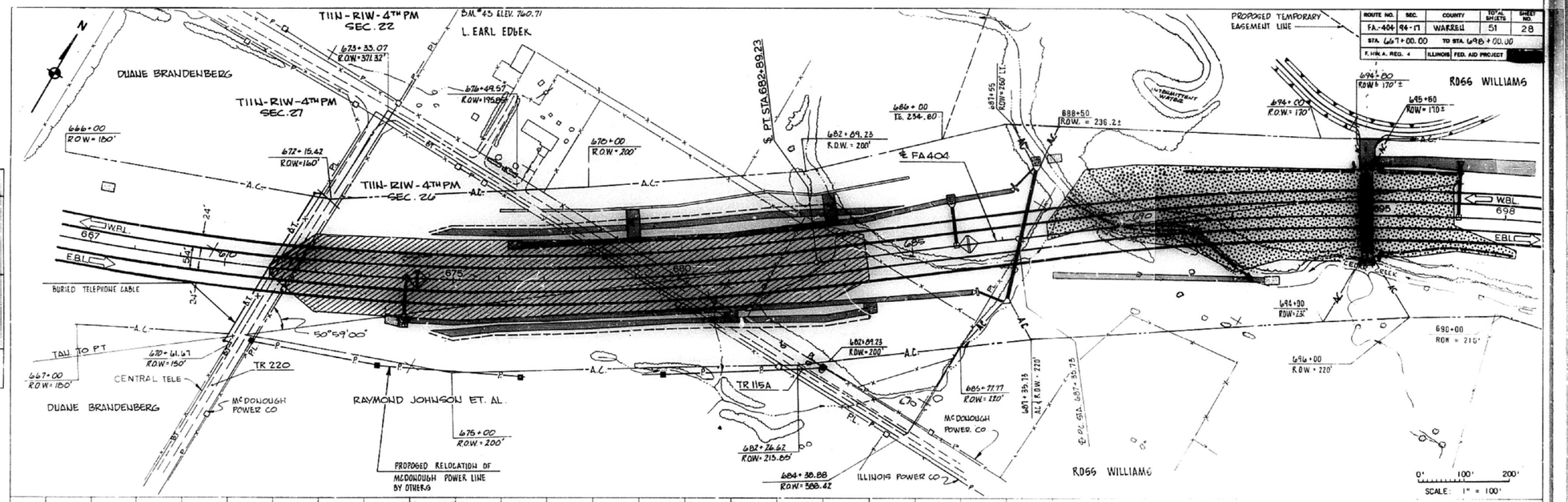

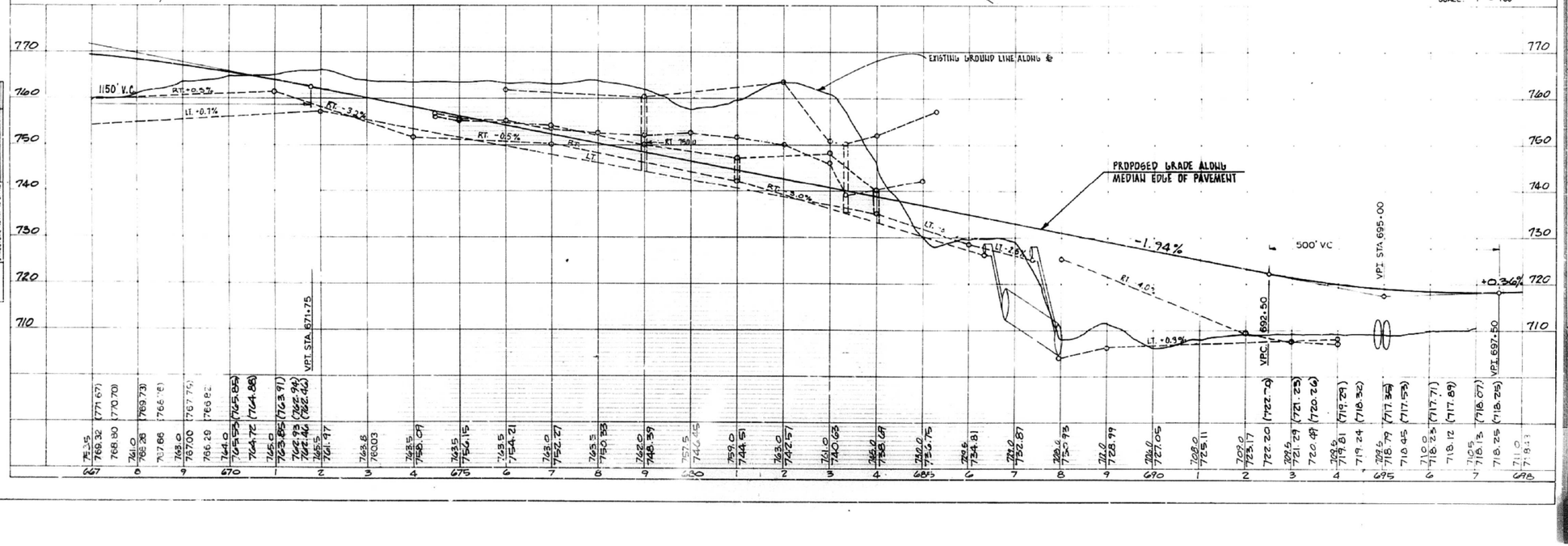

not to scale

USER NAME = keithbr	DESIGNED -	REVISED -	
	DRAWN -	REVISED -	
PLOT SCALE = 0.1000 ' / in.	CHECKED -	REVISED -	
PLOT DATE = 12/15/2017	DATE -	REVISED -	

STATE OF ILLINOIS
DEPARTMENT OF TRANSPORTATION

EXISTING PLAN AND PROFILE
FOR INFORMATION ONLY

SCALE: SHEET OF SHEETS STA. TO STA.

F.A.P.	SECTION	COUNTY	TOTAL SHEETS	SHEET NO.
313	94(16,17)RS,48(17,18)RS	WARREN-KNOX	118	56
RTE US 34/IL 110		CONTRACT NO. 68339		
		ILLINOIS FED. AID PROJECT		

MODEL: Default
FILE NAME: pw:\\IL084EBIDINTEG.illinois.gov:PWIDOT\Documents\IDOT Offices\District 4\Projects\D4_68339\CADData\CADdrawings\alignment.dgn

ROUTE NO.	SEC.	COUNTY	TOTAL SHEETS	SHEET NO.
FA 404	(94-17)	WARREN	51	29
STA. 698+00.00		TO STA. 727+00.00		
F.HWA. REG. 4	ILLINOIS	FED. AID PROJECT		

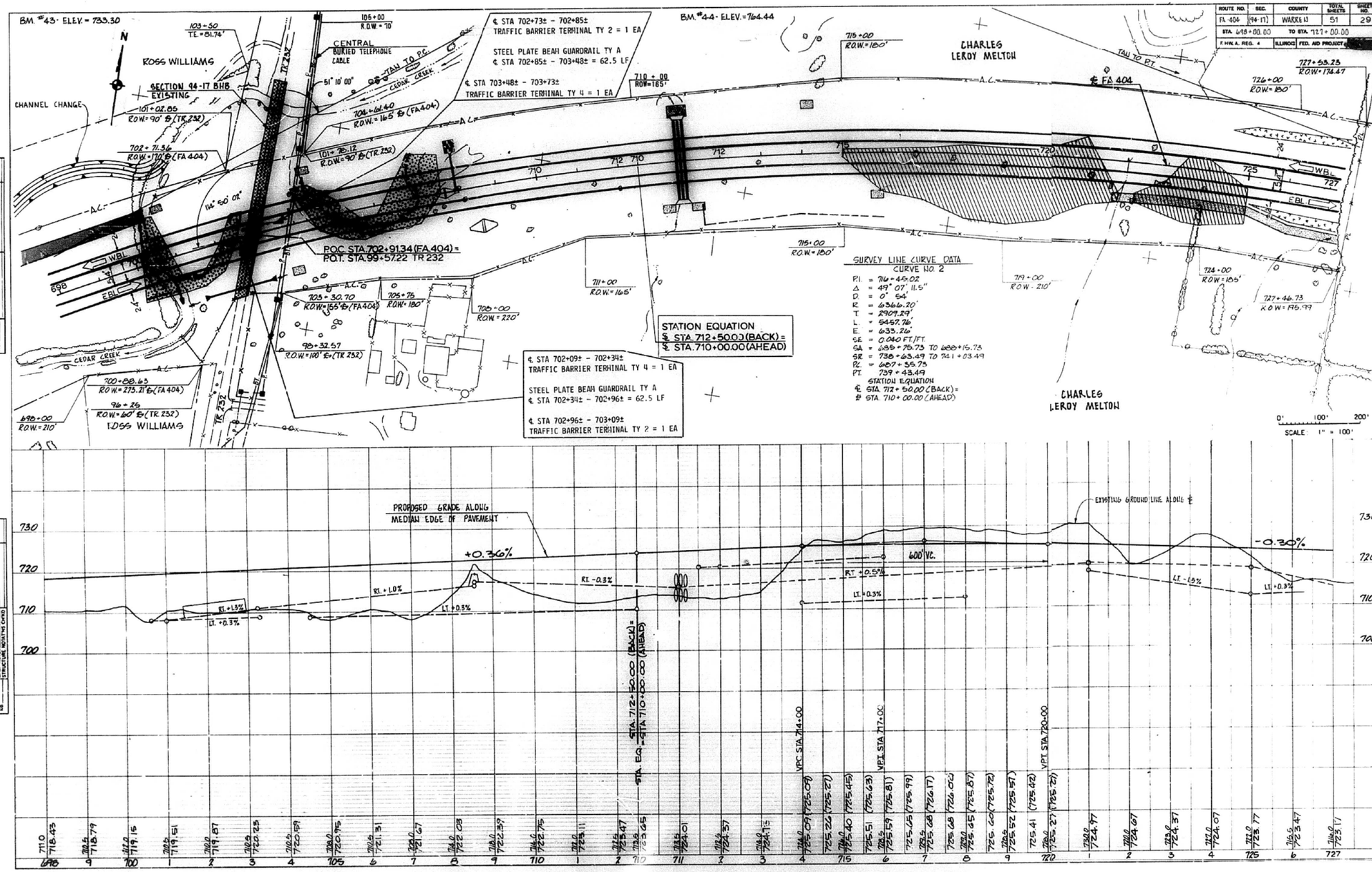

not to scale

USER NAME = keithbr	DESIGNED -	REVISED -
	DRAWN -	REVISED -
PLOT SCALE = 0.1000 ' / in.	CHECKED -	REVISED -
PLOT DATE = 12/15/2017	DATE -	REVISED -

STATE OF ILLINOIS
DEPARTMENT OF TRANSPORTATION

EXISTING PLAN AND PROFILE
FOR INFORMATION ONLY

SCALE: SHEET OF SHEETS STA. TO STA.

F.A.P.	SECTION	COUNTY	TOTAL SHEETS	SHEET NO.
313	94(16,17)RS,48(17,18)RS	WARREN-KNOX	118	57
RTE US 34/IL 110		CONTRACT NO. 68339		
		ILLINOIS	FED. AID PROJECT	

MODEL: Default
FILE NAME: pw:\\IL084EBIDNTEG.illinois.gov:PWIDOT\Documents\IDOT Offices\District 4\Projects\D4_68339\CADData\CADdrawings\alignment.dgn

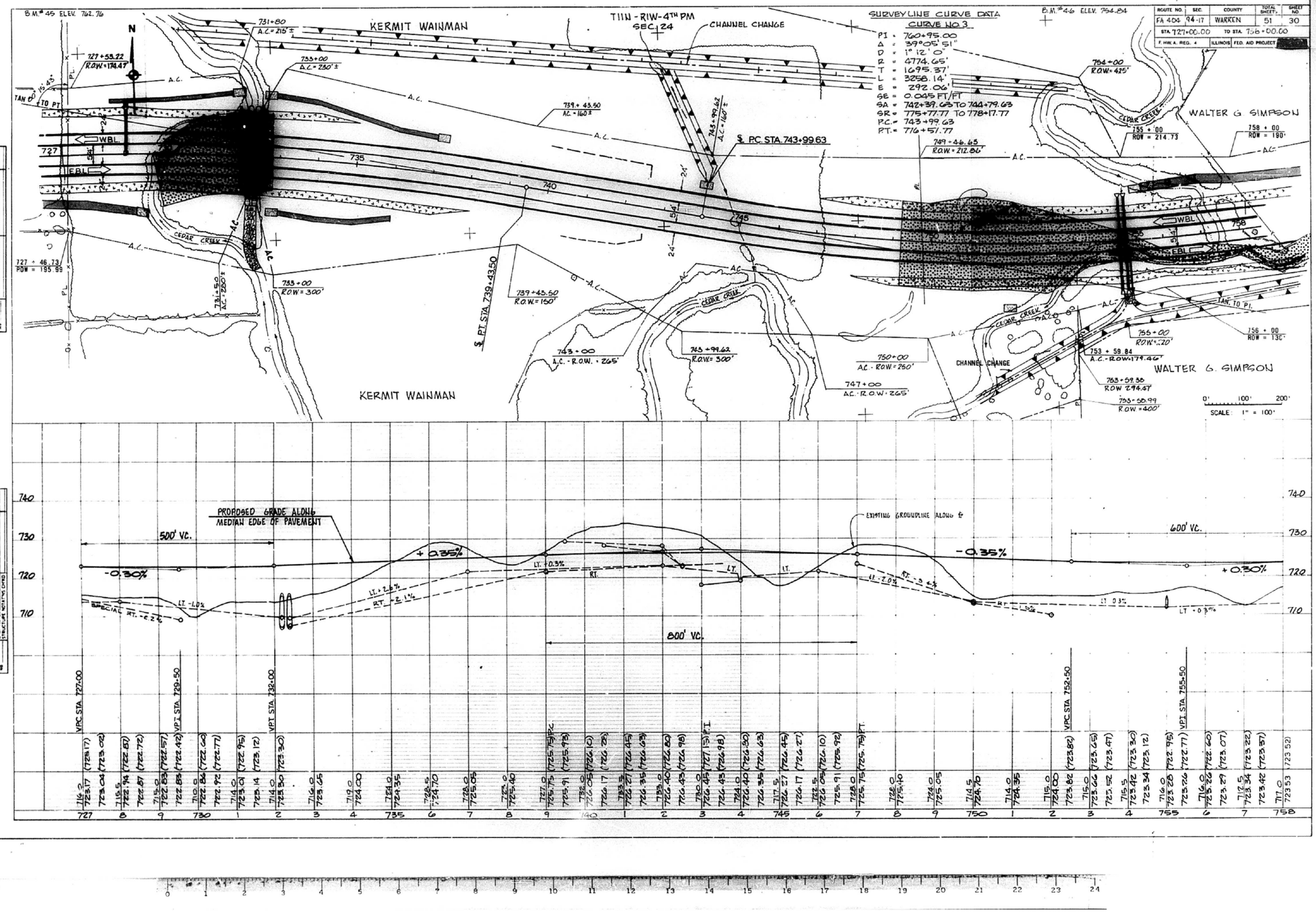

not to scale

USER NAME = keithbr	DESIGNED -	REVISED -
	DRAWN -	REVISED -
PLOT SCALE = 0.1000 ' / in.	CHECKED -	REVISED -
PLOT DATE = 12/15/2017	DATE -	REVISED -

STATE OF ILLINOIS
DEPARTMENT OF TRANSPORTATION

EXISTING PLAN AND PROFILE
FOR INFORMATION ONLY

SCALE: SHEET OF SHEETS STA. TO STA.

F.A.P.	SECTION	COUNTY	TOTAL SHEETS	SHEET NO.
313	94(16,17)RS,48(17,18)RS	WARREN-KNOX	118	58
RTE US 34/IL 110		CONTRACT NO. 68339		

ILLINOIS FED. AID PROJECT

MODEL: Default
FILE NAME: pw:\\IL084EBIDINTEG.illinois.gov:PWIDOT\Documents\IDOT Offices\District 4\Projects\D4_68339\CADData\CADdrawings\alignment.dgn

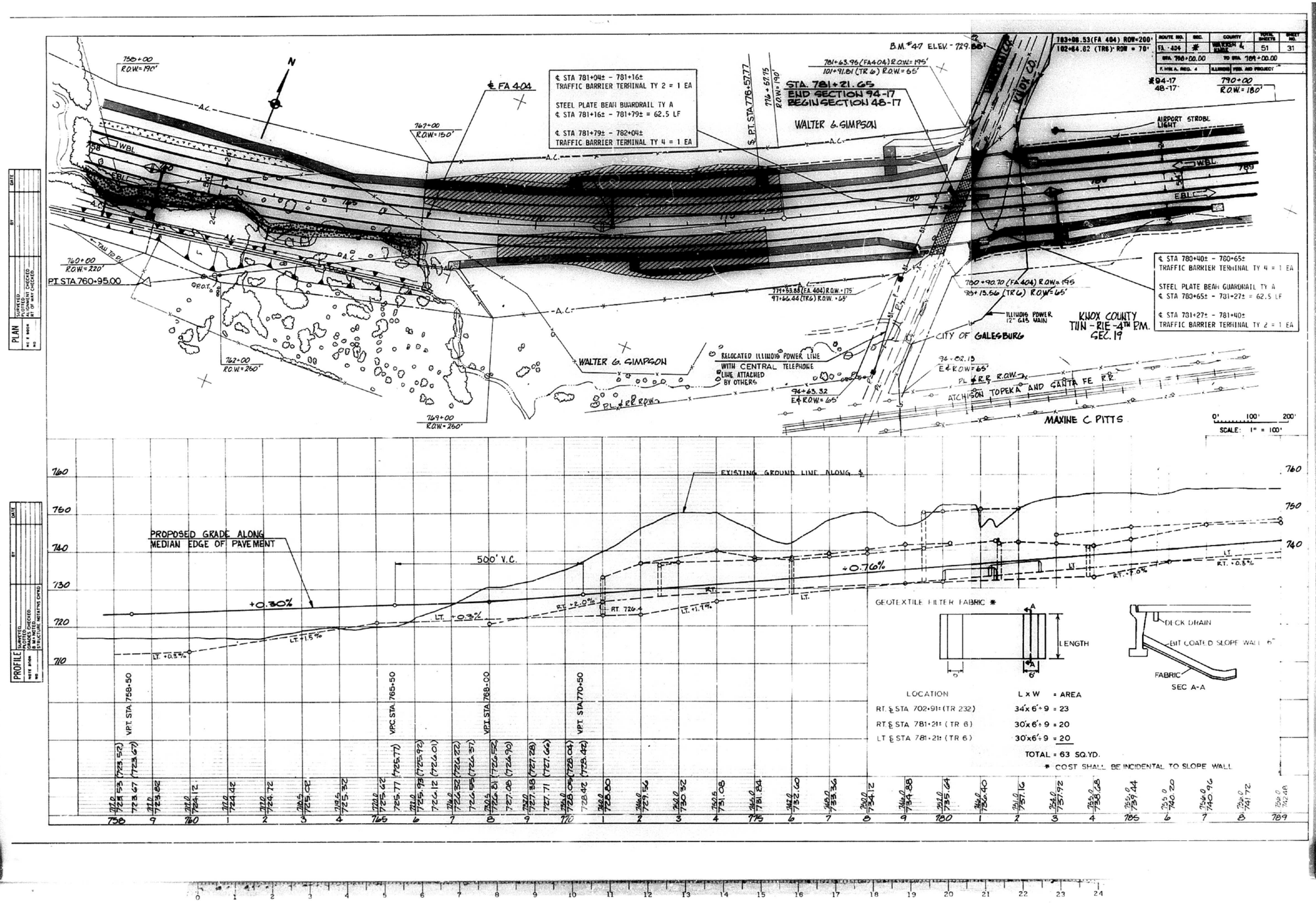

not to scale

USER NAME = keithbr	DESIGNED -	REVISED -	STATE OF ILLINOIS DEPARTMENT OF TRANSPORTATION	EXISTING PLAN AND PROFILE FOR INFORMATION ONLY	F.A.P.	SECTION	COUNTY	TOTAL SHEETS	SHEET NO.
	DRAWN -	REVISED -			313	94(16,17)RS,48(17,18)RS	WARREN-KNOX	118	59
PLOT SCALE = 0.1000 ' / in.	CHECKED -	REVISED -			RTE US 34/IL 110		CONTRACT NO. 68339		
PLOT DATE = 12/15/2017	DATE -	REVISED -		SCALE: SHEET OF SHEETS STA. TO STA.			ILLINOIS FED. AID PROJECT		

MODEL: Default
FILE NAME: pw:\\IL084EBIDINTEG.illinois.gov:PWIDOT\Documents\IDOT Offices\District 4\Projects\D4_68339\CADData\CADdrawings\alignment.dgn

ROUTE NO.	SEC.	COUNTY	TOTAL SHEETS	SHEET NO.
FA-404	48-17	KNOX	51	32
STA. 789+00.00		TO STA. 821+00.00		
T. HIN A. RIS. 4		ILLINOIS	FED. AID PROJECT	

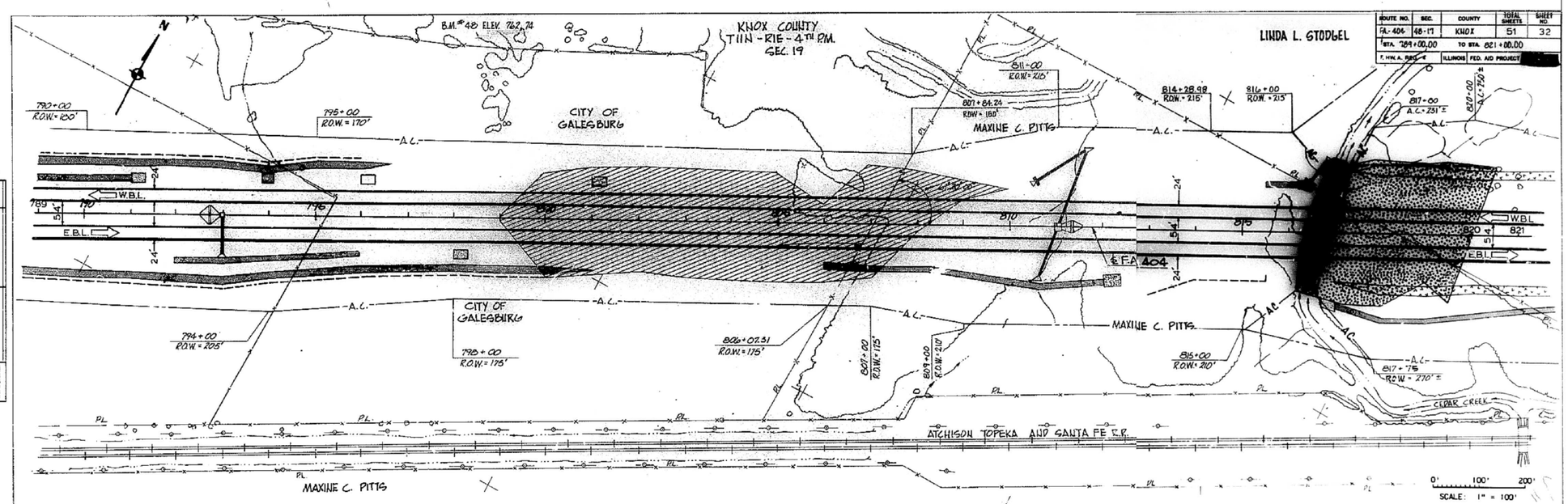

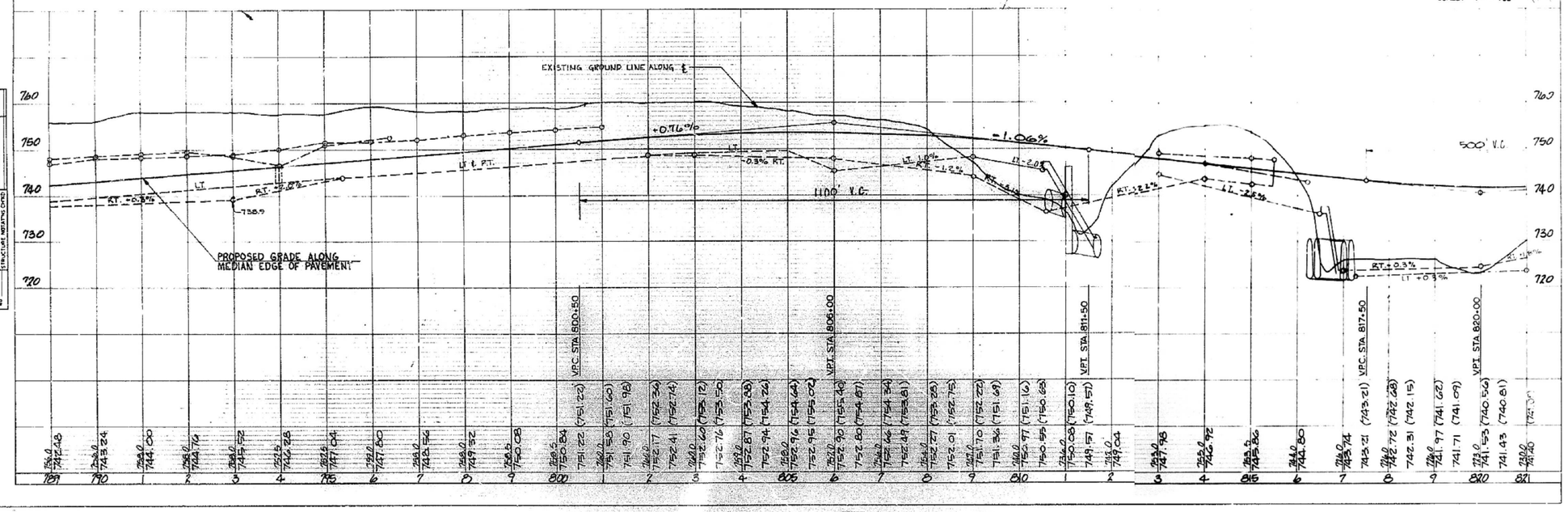

not to scale

USER NAME = keithbr	DESIGNED -	REVISED -	
	DRAWN -	REVISED -	
PLOT SCALE = 0.1000 ' / in.	CHECKED -	REVISED -	
PLOT DATE = 12/15/2017	DATE -	REVISED -	

STATE OF ILLINOIS
DEPARTMENT OF TRANSPORTATION

EXISTING PLAN AND PROFILE
FOR INFORMATION ONLY

SCALE: SHEET OF SHEETS STA. TO STA.

F.A.P.	SECTION	COUNTY	TOTAL SHEETS	SHEET NO.
313	94(16,17)RS,48(17,18)RS	WARREN-KNOX	118	60
RTE US 34/IL 110		CONTRACT NO. 68339		
		ILLINOIS	FED. AID PROJECT	

MODEL: Default
FILE NAME: pw:\\IL084EBIDINTEG.illinois.gov:PWIDOT\Documents\IDOT Offices\District 4\Projects\D4 68339\CADData\CADdrawings\alignment.dgn

ROUTE NO.	SEC.	COUNTY	TOTAL SHEETS	SHEET NO.
FA.-404	46-17	KNOX	51	33
STA. 821+00.00		TO STA. 852+00.00		
F. HW. A. REG. 4		ILLINOIS	FED. AID PROJECT	

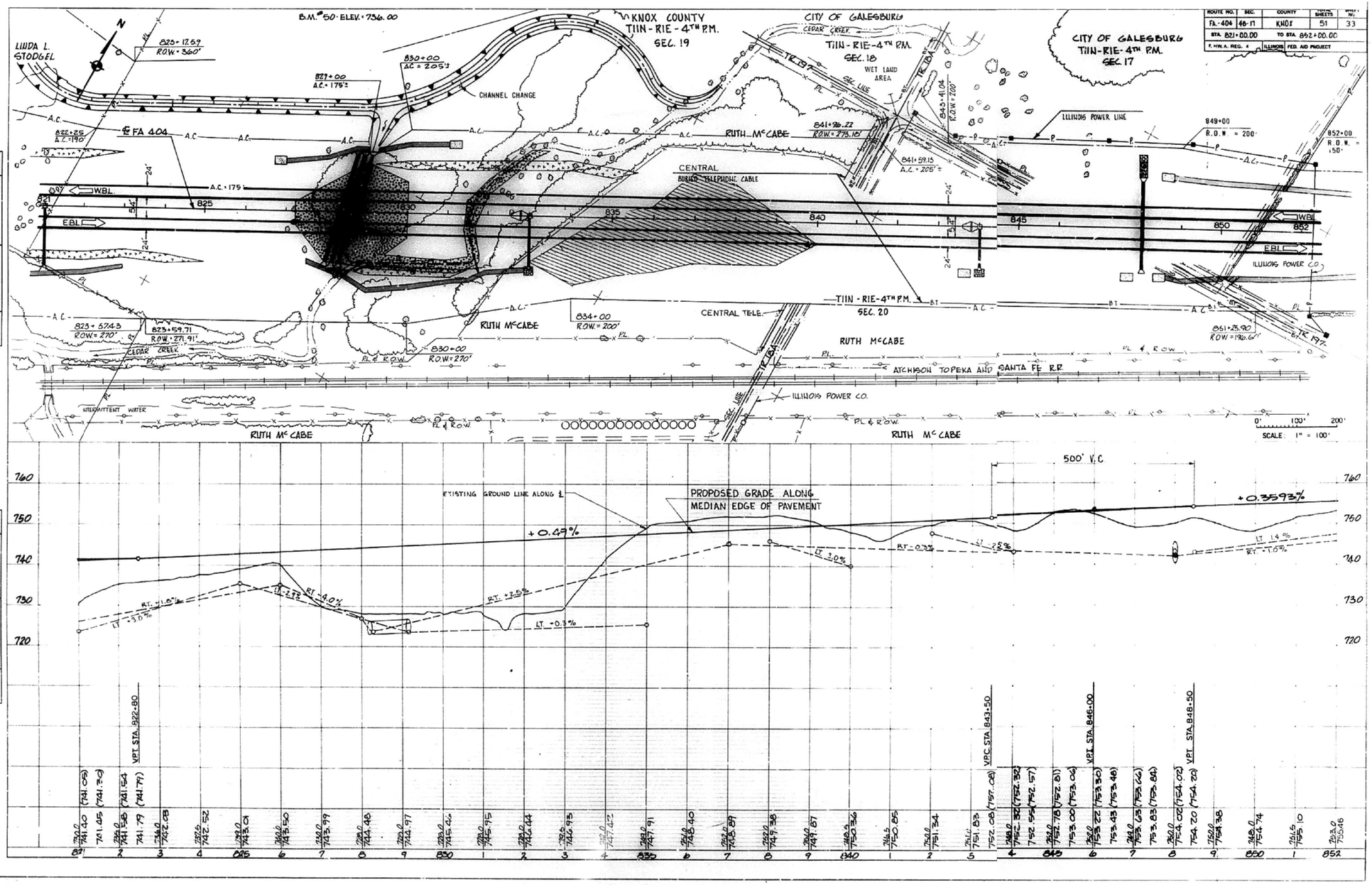

not to scale

USER NAME = keithbr	DESIGNED -	REVISED -
	DRAWN -	REVISED -
PLOT SCALE = 0.1000 ' / in.	CHECKED -	REVISED -
PLOT DATE = 12/15/2017	DATE -	REVISED -

STATE OF ILLINOIS
DEPARTMENT OF TRANSPORTATION

EXISTING PLAN AND PROFILE
FOR INFORMATION ONLY

SCALE: SHEET OF SHEETS STA. TO STA.

F.A.P.	SECTION	COUNTY	TOTAL SHEETS	SHEET NO.
313	94(16,17)RS,48(17,18)RS	WARREN-KNOX	118	61
RTE US 34/IL 110		CONTRACT NO. 68339		
		ILLINOIS	FED. AID PROJECT	

MODEL: Default
FILE NAME: pw:\\IL084EBIDINTEG.illinois.gov:PWIDOT\Documents\IDOT Offices\District 4\Projects\D4 68339\CADData\CADdrawings\alignment.dgn

ROUTE NO.	SEC	COUNTY	TOTAL SHEETS	SHEET NO.
FA-404	48-17	KNOX	51	34
STA. 852+00.00 TO STA. 878+00.00 EBL				
F. H.W.A. REG. 4	ILLINOIS	FED. AID PROJECT		

KNOX COUNTY
T11N - R1E - 4TH P.M.
SEC. 17

SURVEY LINE CURVE DATA
CURVE NO.4

PI = 879+97.68
Δ = 64° 44' 58"
D = 2° 0' 0"
R = 2864.79'
T = 1816.28'
L = 3237.47'
E = 527.24'
P.C. = 861+81.40
P.T. = 894+19.87

℄ CURVE DATA FOR E.B. LANE
CURVE NO. 4A.

P.I. STA. 870+82.43
Δ = 34° 44' 58.0"
D = 1° 59' 13.04"
R = 3036.41'
T = 950.08'
L = 1841.56'
E = 145.17'
GE = 0.06 FT./FT.
GA = 869+72.35 TO 862+12.35
GIZ = CONTINUE ON TO CURVE NO. 4B
P.C. = 861+82.35
P.T. = 879+73.91

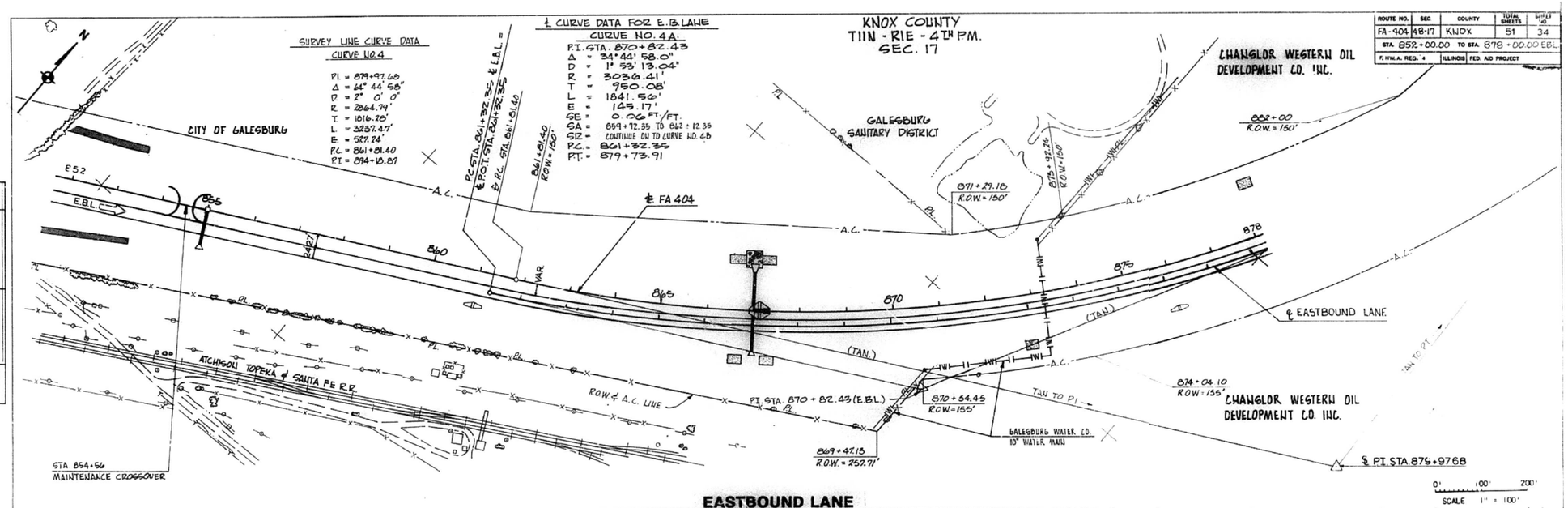

EASTBOUND LANE

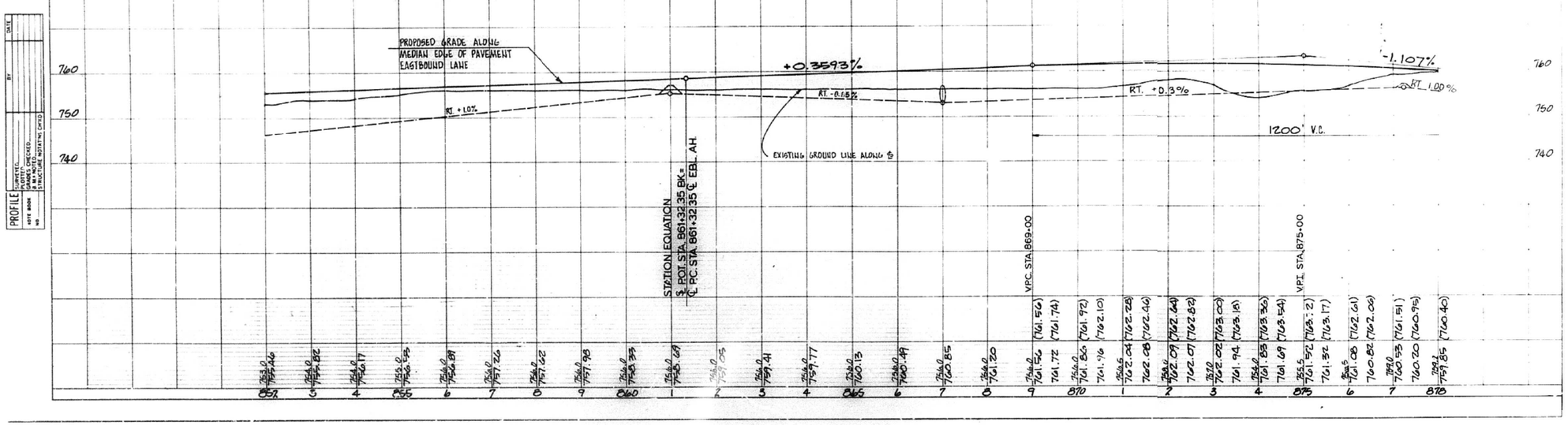

not to scale

USER NAME = keithbr	DESIGNED -	REVISED -
	DRAWN -	REVISED -
PLOT SCALE = 0.1000 ' / in.	CHECKED -	REVISED -
PLOT DATE = 12/15/2017	DATE -	REVISED -

STATE OF ILLINOIS
DEPARTMENT OF TRANSPORTATION

EXISTING PLAN AND PROFILE
FOR INFORMATION ONLY

SCALE: SHEET OF SHEETS STA. TO STA.

F.A.P.	SECTION	COUNTY	TOTAL SHEETS	SHEET NO.
313	94(16,17)RS,48(17,18)RS	WARREN-KNOX	118	62
RTE US 34/IL 110		CONTRACT NO. 68339		
		ILLINOIS	FED. AID PROJECT	

MODEL: Default
FILE NAME: pw:\\IL084EBIDINTEG.illinois.gov:PWIDOT\Documents\IDOT Offices\District 4\Projects\D4_68339\CADData\CADdrawings\alignment.dgn

ROUTE NO.	SEC.	COUNTY	TOTAL SHEETS	SHEET NO.
FA 404	48-17	KNOX	51	35
STA. 878 +00.00 TO STA. 333 +50.00 EBL				
F. HYK A. REG. 4	ILLINOIS	FED. AID PROJECT		

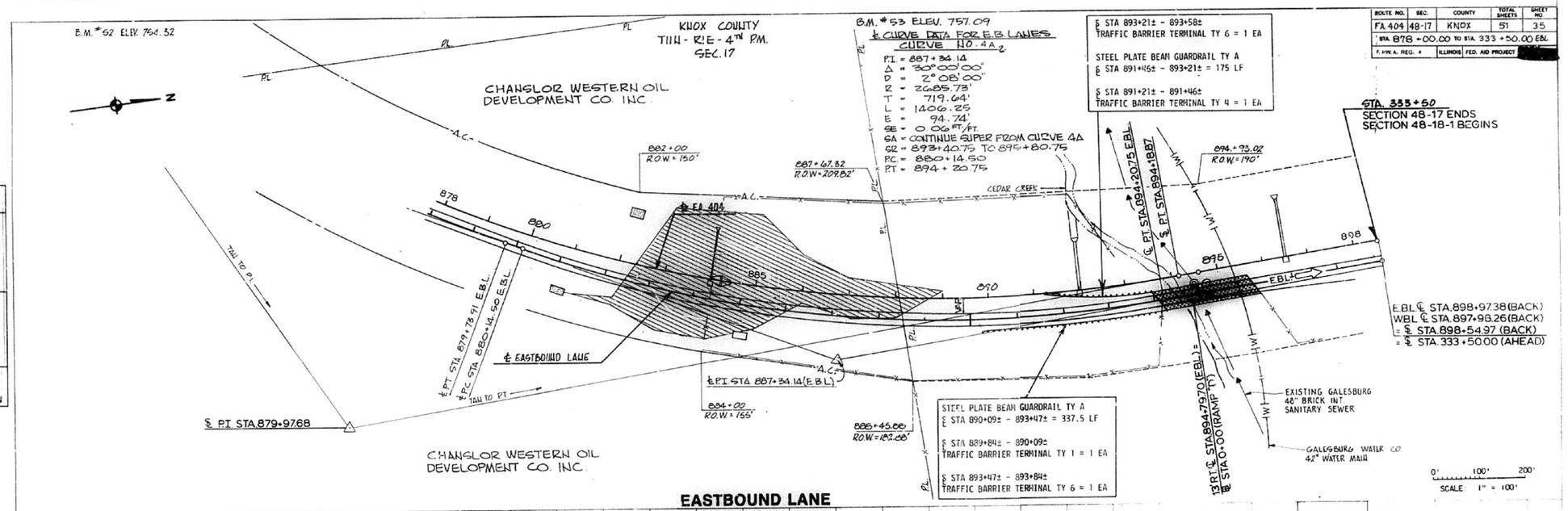

not to scale

USER NAME = keithbr	DESIGNED -	REVISED -
	DRAWN -	REVISED -
PLOT SCALE = 0.1000 ' / in.	CHECKED -	REVISED -
PLOT DATE = 12/15/2017	DATE -	REVISED -

STATE OF ILLINOIS
DEPARTMENT OF TRANSPORTATION

EXISTING PLAN AND PROFILE
FOR INFORMATION ONLY

SCALE: | SHEET OF SHEETS | STA. TO STA.

F.A.P.	SECTION	COUNTY	TOTAL SHEETS	SHEET NO.
313	94(16,17)RS,48(17,18)RS	WARREN-KNOX	118	63
RTE US 34/IL 110		CONTRACT NO. 68339		
		ILLINOIS	FED. AID PROJECT	

MODEL: Default
FILE NAME: pw:\\IL084EBIDNTEG.illinois.gov:PWIDOT\Documents\IDOT Offices\District 4\Projects\D4_68339\CADData\CADdrawings\alignment.dgn

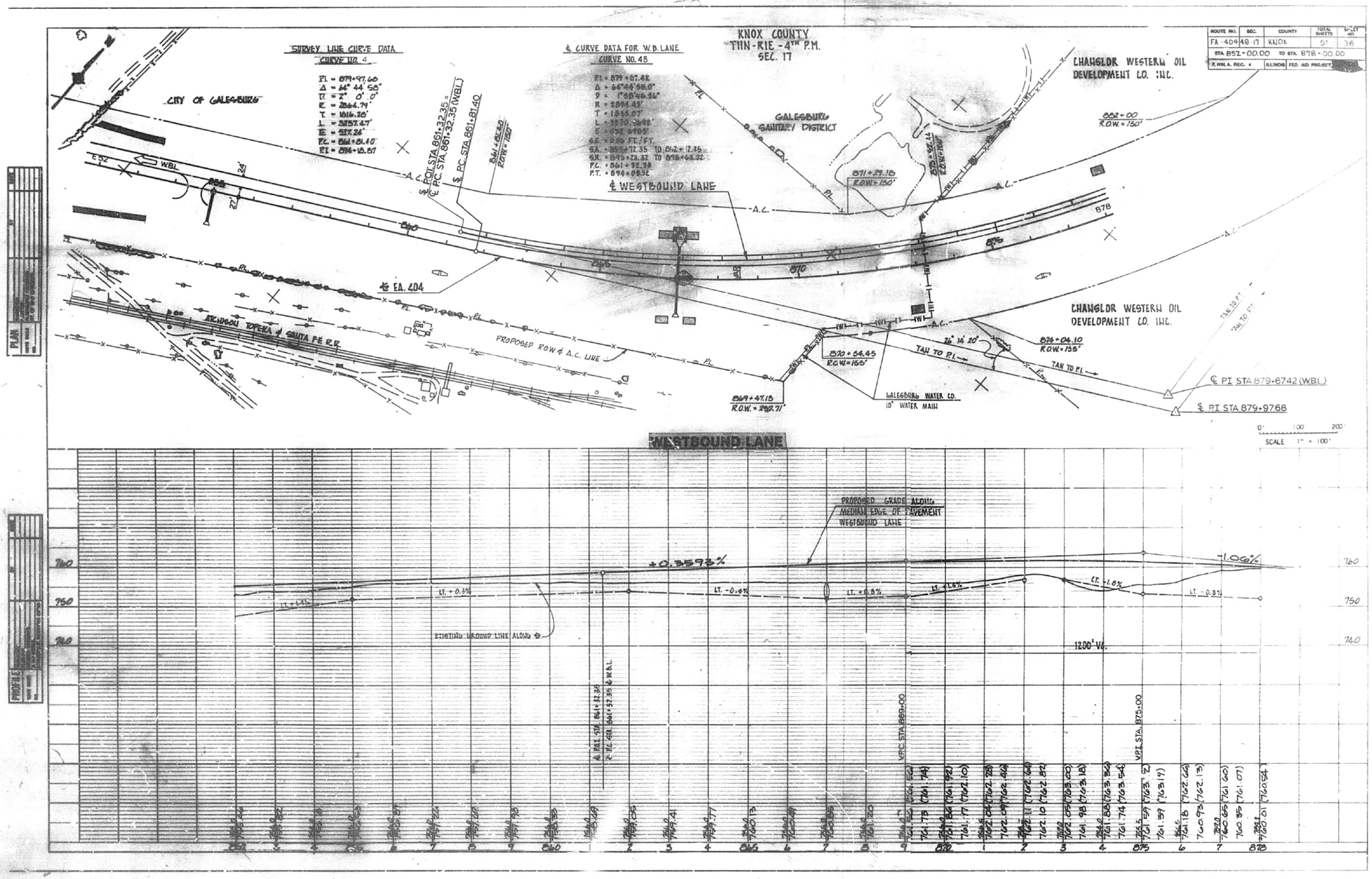

not to scale

USER NAME = keithbr	DESIGNED -	REVISED -	
	DRAWN -	REVISED -	
PLOT SCALE = 0.1000 ' / in.	CHECKED -	REVISED -	
PLOT DATE = 12/15/2017	DATE -	REVISED -	

STATE OF ILLINOIS
DEPARTMENT OF TRANSPORTATION

EXISTING PLAN AND PROFILE
FOR INFORMATION ONLY

SCALE: SHEET OF SHEETS STA. TO STA.

F.A.P.	SECTION	COUNTY	TOTAL SHEETS	SHEET NO.
313	94(16,17)RS,48(17,18)RS	WARREN-KNOX	118	64
RTE US 34/IL 110		CONTRACT NO. 68339		
		ILLINOIS FED. AID PROJECT		

MODEL: Default
FILE NAME: pw:\\IL084EBIDINTEG.illinois.gov:PWIDOT\Documents\IDOT Offices\District 4\Projects\D4_68339\CADData\CADdrawings\alignment.dgn

ROUTE NO.	SEC.	COUNTY	TOTAL SHEETS	SHEET NO.
FA. 404	48-17	KNOX	51	37
STA. 878+00.00 TO STA. 333+50.00 W.B.L.				
F. HWA. REG. 4	ILLINOIS	FED. AID PROJECT		

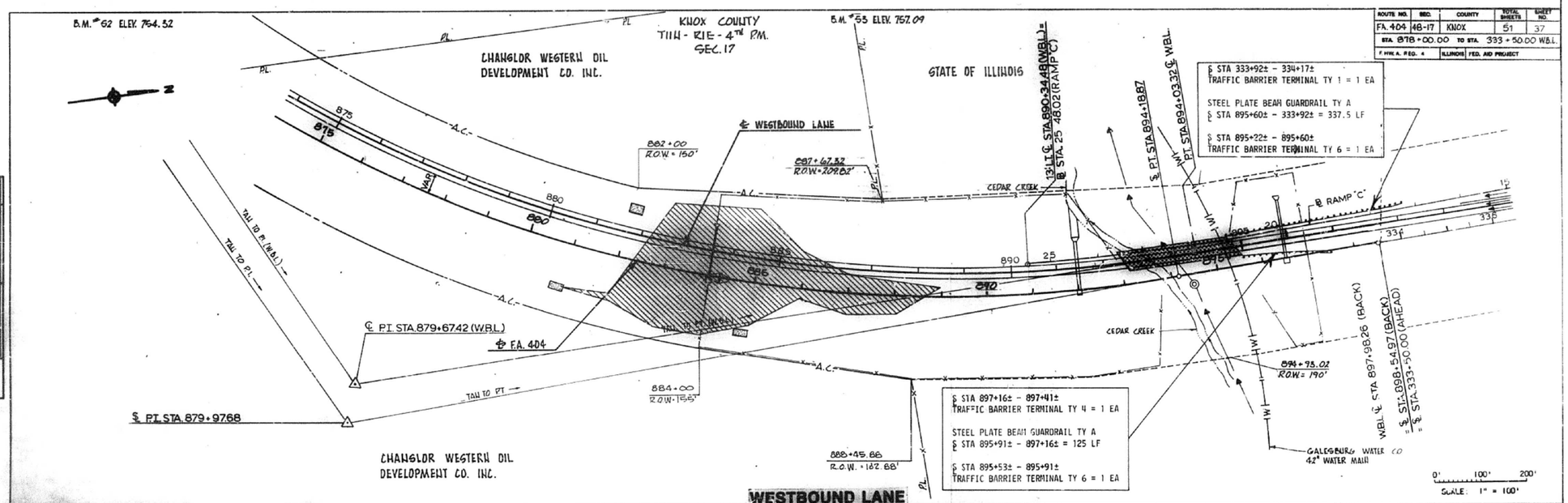

not to scale

USER NAME = keithbr	DESIGNED -	REVISED -
	DRAWN -	REVISED -
PLOT SCALE = 0.1000 ' / in.	CHECKED -	REVISED -
PLOT DATE = 12/15/2017	DATE -	REVISED -

STATE OF ILLINOIS
DEPARTMENT OF TRANSPORTATION

EXISTING PLAN AND PROFILE
FOR INFORMATION ONLY

SCALE: SHEET OF SHEETS STA. TO STA.

F.A.P.	SECTION	COUNTY	TOTAL SHEETS	SHEET NO.
313	94(16,17)RS,48(17,18)RS	WARREN-KNOX	118	65
RTE US 34/IL 110		CONTRACT NO. 68339		
		ILLINOIS	FED. AID PROJECT	

MODEL: Default
FILE NAME: pw:\\IL084EBIDINTEG.illinois.gov:PWIDOT\Documents\IDOT Offices\District 4\Projects\D4 68339\CADData\CADdrawings\alignment.dgn

ROUTE NO.	SECTION	COUNTY	TOTAL SHEETS	SHEET NO.
FA 404	*	KNOX	51	38
STA 335+00		TO	STA 365+00	
F.H.W.A. REG. NO. 4		ILLINOIS	PROJECT [redacted]	

*48-18-1

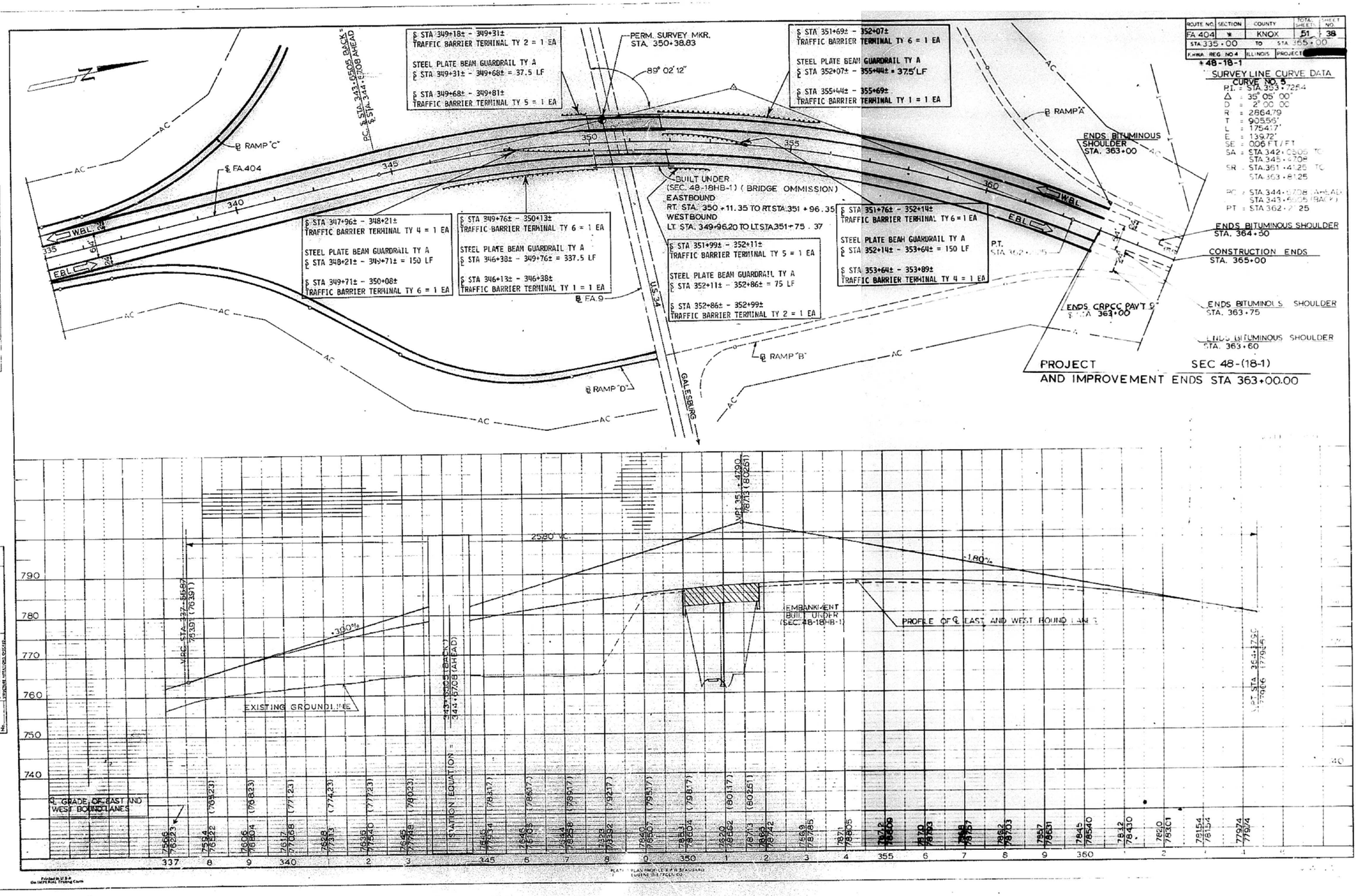

not to scale

USER NAME = keithbr	DESIGNED -	REVISED -
	DRAWN -	REVISED -
PLOT SCALE = 0.1000 ' / in.	CHECKED -	REVISED -
PLOT DATE = 12/15/2017	DATE -	REVISED -

STATE OF ILLINOIS
DEPARTMENT OF TRANSPORTATION

EXISTING PLAN AND PROFILE
FOR INFORMATION ONLY

SCALE: SHEET OF SHEETS STA. TO STA.

F.A.P.	SECTION	COUNTY	TOTAL SHEETS	SHEET NO.
313	94(16,17)RS,48(17,18)RS	WARREN-KNOX	118	66
RTE US 34/IL 110		CONTRACT NO. 68339		
		ILLINOIS	FED. AID PROJECT	

MODEL: Default
FILE NAME: pw:\\IL084EBIDINTEG.illinois.gov:PWIDOT\Documents\IDOT Offices\District 4\Projects\D4_68339\CADData\CADdrawings\alignment.dgn

ROUTE NO.	SEC	COUNTY	TOTAL SHEETS	SHEET NO.
FA. 404	*	WARREN	51	39
F. HW. A. REG. 4		ILLINOIS	FED. AID PROJECT	

*94-17

RAMP "A" EDGE OF PAVEMENT ELEVATIONS

RAMP "A" STATION	ELEVATION LEFT	ELEVATION RIGHT	
0+00.00		706.38	RIGHT EDGE 0.25' BELOW 404 EDGE OF PAVEMENT
0+25.00		706.33	
0+50.00		706+29	
0+75.00		706.28	
1+00.00		706.29	
1+25.00		706.32	
1+50.00		706.37	
1+75.00		706.44	
2+00.00		706.54	
2+25.00		706.66	
2+50.00		706.79	
2+75.00		706.95	
2+99.58		707.12	
3+00.00		707.12	
3+25.00		707.30	
3+50.00		707.48	
3+75.00		707.66	
3+99.71	708.09	707.84	
4+00.00	708.09	707.84	
4+25.00	708.27	708.02	
4+50.00	708.45	708.20	
4+75.00	708.63	708.38	
5+00.00	708.81	708.56	
5+25.00	708.99	708.74	
5+50.00	709.17	708.92	
5+75.00	709.35	709.10	
6+00.00	709.53	709.28	
6+25.00	709.71	709.46	
6+50.00	709.89	709.64	
6+60.38	709.97	709.72	
6+75.00	710.17	709.92	
7+00.00	710.46	709.64	

F.A. 404 EDGE OF PAVEMENT

RAMP "A" STATION	ELEVATION LEFT	ELEVATION RIGHT	
7+25.00	710.69	710.99	TRANSITION
7+35.08	710.76	710.00	
7+50.00	710.87	710.00	
7+75.00	710.99	709.94	
8+00.00	711.04	709.83	
8+10.08	711.05	709.77	
8+25.00	710.97	709.69	8% RT
8+50.00	710.91	709.63	
8+75.00	710.91	709.63	
9+00.00	711.01	709.73	
9+25.00	711.19	709.91	
9+50.00	711.44	710.16	
9+75.00	711.80	710.52	
10+00.00	712.24	710.96	
10+01.32	712.26	710.98	
10+25.00	712.63	711.48	TRANSITION
10+50.00	713.09	712.07	
10.75.00	713.64	712.76	
11+00.00	714.27	713.52	
11+25.00	714.99	714.37	
11+50.00	715.79	715.31	
11+75.00	716.64	716.31	
11+93.32	716.98	717.05	
12+00.00	717.57	717.32	TYPICAL
12+25.00	718.58	718.33	
12+50.00	719.59	719.34	
12+75.00	720.56	720.31	
13+00.00	721.46	721.21	
13+25.00	722.28	722.03	
13+50.00	723.02	722.77	
13+75.00	723.69	723.44	
14+00.00	724.28	724.03	

RAMP "A" STATION	ELEVATION LEFT	ELEVATION RIGHT	
14+25.00	724.79	724.54	TYPICAL
14+50.00	725.23	724.98	
14+75.00	725.63	725.38	
15+00.00	726.03	725.78	
15+25.00	726.43	726.18	
15+50.00	726.83	726.58	
15+75.00	727.23	726.98	
16+00.00	727.63	727.38	
16+25.00	728.03	727.78	
16+50.00	728.43	728.18	
16+75.00	728.83	728.58	
17+00.00	729.23	728.98	
17+25.00	729.63	729.38	
17+50.00	730.03	729.78	
17+75.00	730.43	730.18	
18+00.00	730.83	730.58	
18+25.00	731.23	730.98	
18+50.00	731.63	731.38	
18+56.31	731.73	731.48	MATCH TO EXISTING RAMP STUB

PLAN — DATE — BY — CORRECTED — PLOTTED — ALIGNMENT CHECKED — AS OF MAY CHECKED — NOTE BOOK — NO.

PROFILE — DATE — BY — CORRECTED — PLOTTED — GRADES CHECKED — B.M. NOTED — ELEVATIONS CHECKED — NOTE BOOK — NO.

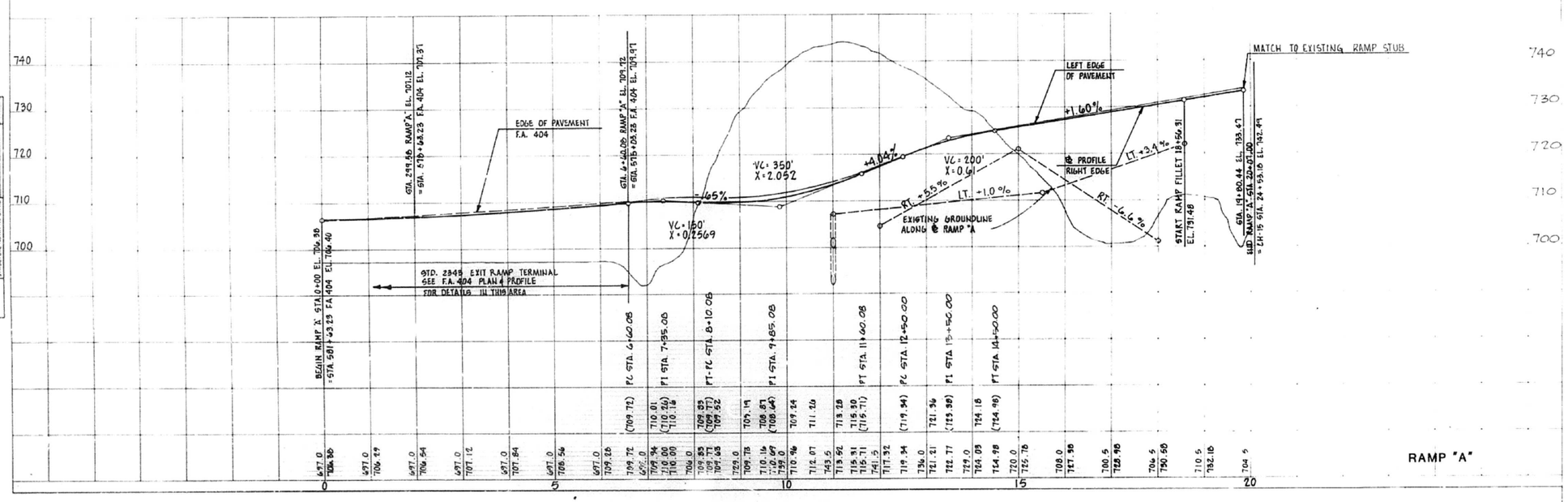

not to scale

USER NAME = keithbr	DESIGNED -	REVISED -
	DRAWN -	REVISED -
PLOT SCALE = 0.1000 ' / in.	CHECKED -	REVISED -
PLOT DATE = 12/15/2017	DATE -	REVISED -

STATE OF ILLINOIS
DEPARTMENT OF TRANSPORTATION

EXISTING PLAN AND PROFILE
FOR INFORMATION ONLY

SCALE: SHEET OF SHEETS STA. TO STA.

F.A.P.	SECTION	COUNTY	TOTAL SHEETS	SHEET NO.
313	94(16,17)RS,48(17,18)RS	WARREN-KNOX	118	67
RTE US 34/IL 110		CONTRACT NO. 68339		
		ILLINOIS FED. AID PROJECT		

MODEL: Default
FILE NAME: pw:\\IL084EBIDNTEG.illinois.gov:PWIDOT\Documents\IDOT Offices\District 4\Projects\D4_68339\CADData\CADdrawings\Alignment.dgn

ROUTE NO.	SEC.	COUNTY	TOTAL SHEETS	SHEET NO.
F.A. 404	*	WARREN	51	40
F. HW. A. REG. 4		ILLINOIS	FED. AID PROJECT	[redacted]

* 94 - 16 - 1

RAMP "B" EDGE OF PAVEMENT ELEVATIONS

RAMP "B" STATIONS	ELEVATIONS LEFT	ELEVATIONS RIGHT	
0+00.00			MATCH TO EXIST. RAMP STUB
0+25.00			
0+50.00			
0+75.00			
1+00.00			
1+25.00			
1+42.00	731.74	731.49	
1+48.47	731.63	731.38	
1+50.90	731.64	731.36	TRANSITION
1+75.00	731.35	730.96	
2+00.00	731.09	730.56	
2+25.00	730.82	730.16	
2+50.00	730.55	729.76	
2+75.00	730.29	729.36	
3+00.00	730.02	728.96	
3+25.00	729.76	728.56	
3+40.47	729.59	728.31	
3+50.00	729.44	728.16	
3+75.00	729.04	727.76	
4+00.00	728.64	727.36	
4+25.00	728.24	726.96	
4+50.00	727.84	726.56	
4+75.00	727.44	726.16	
5+00.00	727.04	725.76	
5+25.00	726.64	725.36	
5+50.00	726.24	724.96	
5+75.00	725.84	724.56	
6+00.00	725.44	724.16	
6+25.00	725.06	723.78	
6+50.00	724.76	723.48	
6+75.00	724.55	723.27	
7+00.00	724.41	723.13	8% SUPERELEV.

RAMP "B" STATIONS	ELEVATIONS LEFT	ELEVATIONS RIGHT	
7+10.02	724.38	723.10	P.C.
7+25.00	724.27	723.08	
7+50.00	724.15	723.10	
7+75.00	724.11	723.20	
8+00.00	724.14	723.37	
8+17.42	724.20	723.53	
8+25.00	724.26	723.80	
8+50.00	724.48	723.84	
8+75.00	724.69	724.07	TRANSITION
9+00.00	724.90	724.30	
9+17.42	725.04	724.46	
9+25.00		724.53	
9+50.00		724.76	
9+75.00		724.99	
10+00.00		725.21	
10+25.00		725.43	
10+50.00		725.64	
10+75.00		725.84	
11+00.00		726.03	
11+25.00		726.22	
11+50.00		726.41	
11+75.00		726.60	
12+00.00		726.79	
12+25.00		726.98	
12+50.00		727.17	
12+75.00		727.36	
13+00.00		727.55	
13+25.00		727.74	
13+50.00		727.93	
13+75.00		728.12	
14+00.00		728.31	
14+25.00		728.50	

F. A. 404 EDGE OF PAVEMENT

RAMP "B" STATIONS	ELEVATIONS LEFT	ELEVATIONS RIGHT	
14+50.00		728.69	
14+75.00		728.88	
15+00.00		729.07	
15+25.00		729.26	
15+50.00		729.45	
15+75.00		729.64	
16+00.00		729.83	
16+25.00		730.02	
16+50.00		730.21	
16+75.00		730.40	
17+00.00		730.59	
17+25.00		730.78	
17+50.00		730.97	
17+75.00		731.16	
18+00.00		731.35	
18+25.00		731.54	
18+50.00		731.73	
18+67.42		731.86	

F. A. 404 EDGE OF PAVEMENT

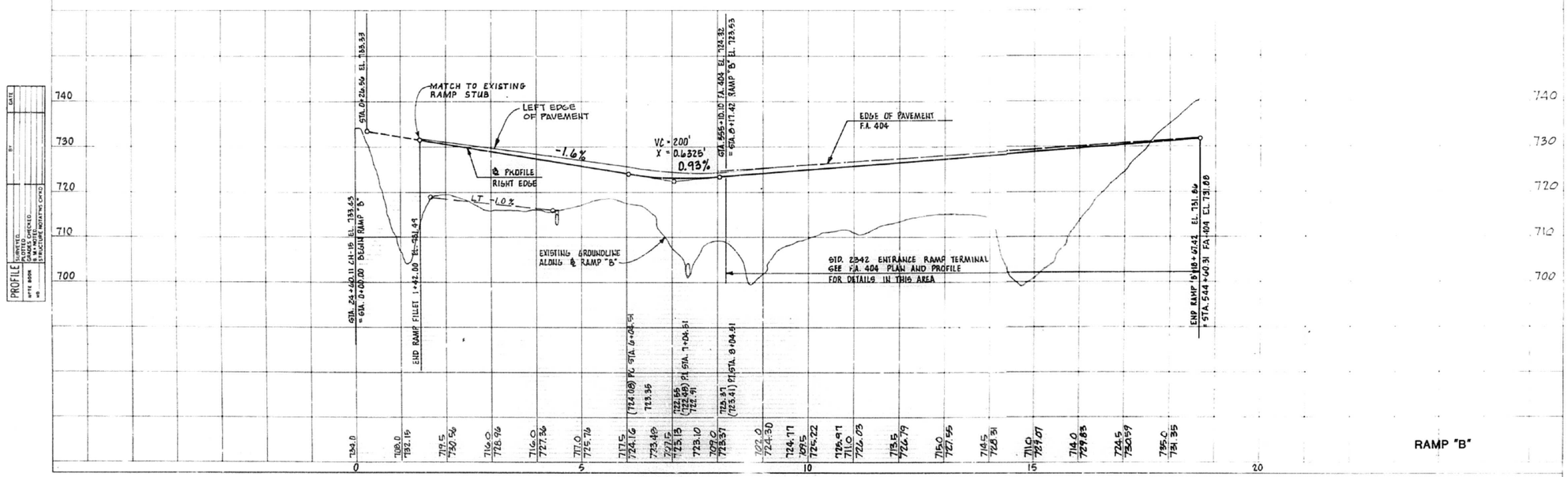

not to scale

USER NAME = keithbr	DESIGNED -	REVISED -
	DRAWN -	REVISED -
PLOT SCALE = 0.1000 ' / in.	CHECKED -	REVISED -
PLOT DATE = 12/15/2017	DATE -	REVISED -

STATE OF ILLINOIS
DEPARTMENT OF TRANSPORTATION

EXISTING PLAN AND PROFILE
FOR INFORMATION ONLY

SCALE: SHEET OF SHEETS STA. TO STA.

F.A.P.	SECTION	COUNTY	TOTAL SHEETS	SHEET NO.
313	94(16,17)RS,48(17,18)RS	WARREN-KNOX	118	68
RTE US 34/IL 110		CONTRACT NO. 68339		
		ILLINOIS	FED. AID PROJECT	

MODEL: Default
FILE NAME: pw:\\IL084EBIDINTEG.illinois.gov:PWIDOT\Documents\IDOT Offices\District 4\Projects\D4 68339\CADData\CADdrawings\alignment.dgn

ROUTE NO.	SEC	COUNTY	TOTAL SHEETS	SHEET NO.
F.A.404	*	WARREN	51	41
F. HW. A. REQ. 4		ILLINOIS	FED. AID PROJECT	

#94 - 16-1

RAMP "C" EDGE PAVEMENT ELEVATIONS

RAMP "C" STATION	ELEVATIONS LEFT	ELEVATIONS RIGHT	
0+00.00		731.98	F.A. 404 EDGE OF PAVEMENT
0+25.00		731.78	
0+50.00		731.58	
0+75.00		731.38	
1+00.00		731.18	
1+25.00		730.98	
1+50.00		730.78	
1+75.00		730.58	
2+00.00		730.38	
2+25.00		730.18	
2+50.00		729.98	
2+75.00		729.78	
2+99.58		729.59	
3+00.00		729.59	RIGHT EDGE 0.25' BELOW 404 EDGE OF PAVEMENT
3+25.00		729.41	
3+50.00		729.23	
3+75.00		729.05	
3+99.71		728.87	
4+00.00	729.12	728.87	
4+25.00	728.94	728.69	
4+50.00	728.76	728.51	
4+75.00	728.58	728.33	
5+00.00	728.40	728.15	
5+25.00	728.22	727.97	
5+50.00	728.04	727.79	
5+75.00	727.86	727.61	
6+00.00	727.68	727.43	
6+25.00	727.50	727.25	
6+50.00	727.32	727.07	
6+60.08	727.25	727.00	
6+75.00	727.24	726.89	
7+00.00	727.19	726.67	

RAMP "C" STATION	ELEVATIONS LEFT	ELEVATIONS RIGHT	
7+25.00	727.11	725.41	TRANS.
7+50.00	727.00	726.13	
7+75.00	726.83	725.79	
8+00.00	726.63	725.42	
8+10.08	726.54	725.26	
8+25.00	726.30	725.02	
8+50.00	725.90	724.62	
8+75.00	725.52	724.24	
9+00.00	725.24	723.96	8% RIGHT
9+25.00	725.01	723.73	
9+50.00	724.90	723.62	
9+75.00	724.86	723.58	
10+00.00	724.89	723.61	
10+01.32	724.89	723.61	
10+25.00	724.87	723.72	
10+50.00	724.94	723.92	
10+75.00	725.08	724.20	
11+00.00	725.31	724.56	TRANSITION
11+25.00	725.62	725.00	
11+50.00	726.00	725.52	
11+75.00	726.47	726.12	
11+93.32	726.86	726.61	
12+00.00	727.05	726.80	
12+25.00	727.82	727.57	
12+50.00	728.66	728.41	
12+75.00	729.56	729.31	
13+00.00	730.46	730.21	
13+25.00	731.36	731.11	TYPICAL
13+50.00	732.26	732.01	
13+75.00	733.16	732.91	
14+00.00	734.06	733.81	
14+25.00	734.96	734.71	

RAMP "C" STATION	ELEVATIONS LEFT	ELEVATIONS RIGHT	
14+50.00	735.86	735.61	TYPICAL
14+75.00	736.76	736.51	
15+00.00	737.66	737.41	
15+25.00	738.56	738.31	
15+50.00	739.46	739.21	
15+75.00	740.36	740.11	
16+00.00	741.26	741.01	
16+25.00	742.14	741.89	
16+50.00	742.96	742.71	
16+75.00	743.74	743.49	
17+00.00	744.46	744.21	
17+25.00	745.14	744.89	
17+50.00	745.76	745.51	
17+75.00	746.34	746.03	
18+00.00	746.86	746.61	
18+25.00	747.36	747.11	
18+50.00	747.86	747.61	
18+56.27	747.99	747.74	MATCH TO EXST RAMP STUB

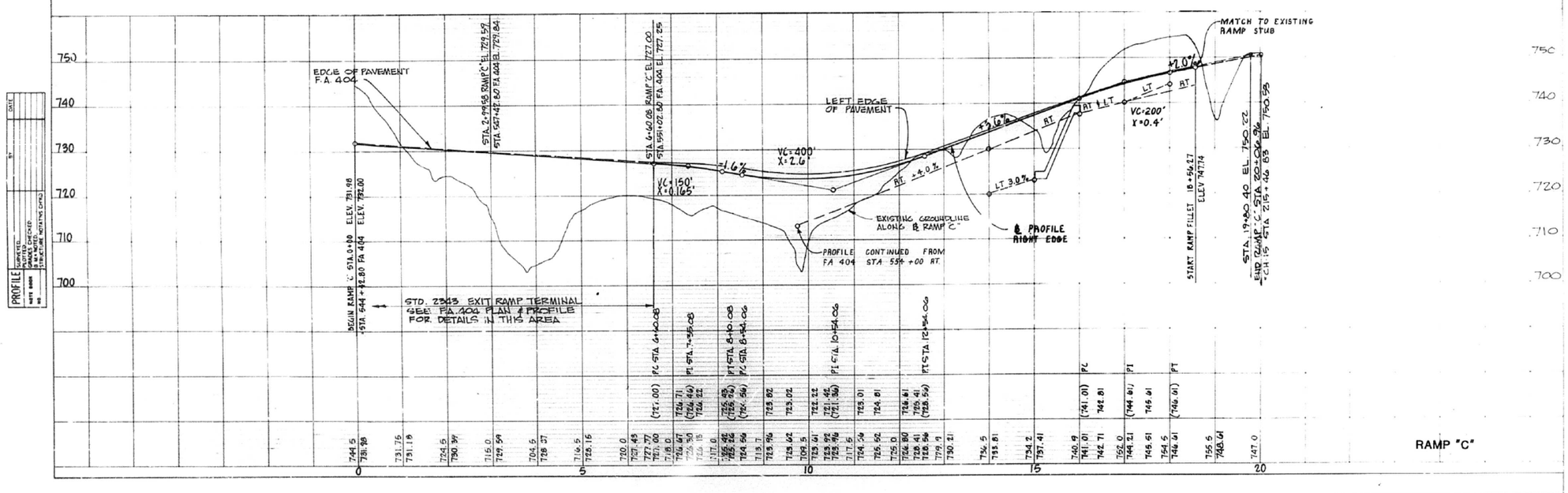

not to scale

USER NAME = keithbr	DESIGNED -	REVISED -
	DRAWN -	REVISED -
PLOT SCALE = 0.1000 ' / in.	CHECKED -	REVISED -
PLOT DATE = 12/15/2017	DATE -	REVISED -

STATE OF ILLINOIS
DEPARTMENT OF TRANSPORTATION

EXISTING PLAN AND PROFILE
FOR INFORMATION ONLY

SCALE: SHEET OF SHEETS STA. TO STA.

F.A.P.	SECTION	COUNTY	TOTAL SHEETS	SHEET NO.
313	94(16,17)RS,48(17,18)RS	WARREN-KNOX	118	69
RTE US 34/IL 110		CONTRACT NO. 68339		
		ILLINOIS	FED. AID PROJECT	

MODEL: Default
FILE NAME: pw:\\IL084EBIDINTEG.illinois.gov:PWIDOT\Documents\IDOT Offices\District 4\Projects\D4_68339\CAD\Data\CADdrawings\alignment.dgn

ROUTE NO.	SEC.	COUNTY	TOTAL SHEETS	SHEET NO.
F.A. 404	*	WARREN	51	42
F. HWY. A. REG. 4	ILLINOIS	FED. AID PROJECT		

*94-17

RAMP "D" EDGE OF PAVEMENT ELEVATIONS

RAMP "D" STATION	ELEVATION LEFT	ELEVATION RIGHT	
			MATCH TO EXIST. RAMP STUB
1+00.89	748.65	748.35	TRANSITION
1+20.21	748.22	747.97	
1+25.00	748.13	747.86	
1+50.00	747.60	747.24	
1+75.00	746.99	746.54	
2+00.00	746.29	745.75	
2+25.00	745.51	744.88	
2+50.00	744.63	743.93	
2+70.21	743.93	743.12	
2+75.00	743.69	742.89	
3+00.00	742.57	741.77	5% SUPERELEVATION
3+25.00	741.37	740.57	
3+50.00	740.08	739.28	
3+75.00	738.71	737.91	
4+00.00	737.26	736.46	
4+25.00	735.76	734.96	
4+50.00	734.26	733.46	
4+75.00	732.76	731.96	
5+00.00	731.26	730.46	
5+25.00	729.76	728.96	
5+50.00	728.26	727.46	
5+75.00	726.76	725.96	
6+00.00	725.26	724.46	
6+25.00	723.76	722.96	
6+50.00	722.26	721.46	
6+75.00	720.76	719.96	
7+00.00	719.26	718.46	
7+25.00	717.84	717.04	

RAMP "D" STATION	ELEVATION LEFT	ELEVATION RIGHT	
7+50.00	716.53	715.73	5% SUPERELEVATION
7+75.00	715.33	714.53	
8+00.00	714.23	713.43	
8+25.00	713.24	712.44	
8+50.00	712.35	711.55	
8+75.00	711.57	710.77	
9+00.00	710.89	710.09	
9+25.00	710.33	709.53	
9+50.00	709.87	709.07	
9+75.00	709.51	708.71	
10+00.00	709.26	708.46	
10+25.00	709.12	708.32	
10+50.00	709.08	708.28	
10+75.00	709.15	708.35	
11+00.00	709.32	708.52	
11+25.00	709.48	708.68	
11+35.71	709.53	708.73	TRANSITION
11+50.00	709.56	708.78	
11+75.00	709.58	708.83	
12+00.00	709.55	708.83	
12+25.00	709.46	708.77	
12+43.11	709.36	708.69	
12+50.00	709.31	708.65	
12+75.00	709.17	708.53	
13+00.00	709.02	708.40	
13+25.00	708.87	708.27	
13+43.11	708.76	708.18	
13+50.00	FA 404 EDGE OF PAVEMENT	708.14	
13+75.00		708.02	
14+00.00		707.88	
14+25.00		707.74	
14+50.00		707.60	

RAMP "D" STATION	ELEVATION LEFT	ELEVATION RIGHT
14+75.00		707.44
15+00.00		707.28
15+25.00		707.11
15+50.00		706.94
15+75.00		706.78
16+00.00		706.62
16+25.00		706.49
16+50.00		706.37
16+75.00		706.27
17+00.00		706.20
17+25.00		706.15
17+50.00		706.13
17+75.00		706.12
18+00.00		706.13
18+25.00		706.17
18+50.00		706.23
18+75.00		706.31
19+00.00		706.41
19+25.00		706.53
19+50.00		706.68
19+75.00		706.84
20+00.00		707.03
20+25.00		707.24
20+50.00		707.47
20+75.00		707.72
21+00.00		707.98
21+25.00		708.24
21+50.00		708.50
21+75.00		708.76
22+00.00		709.02
22+25.00		709.28
22+50.00		709.54
22+75.00		709.80
22+93.11		709.99

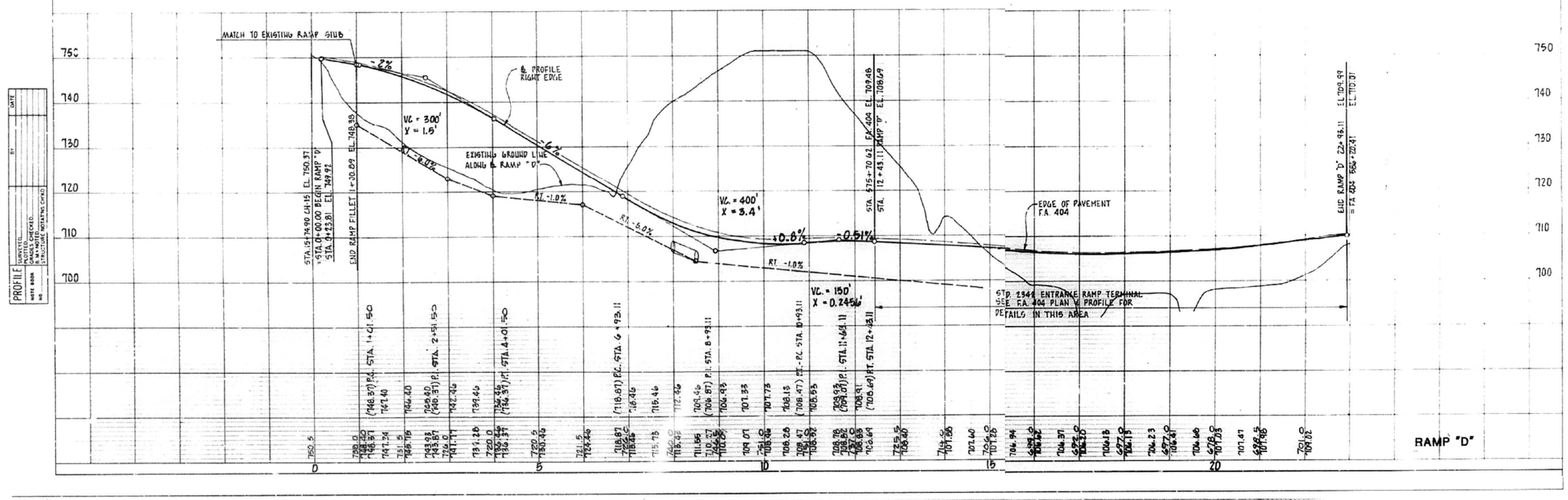

not to scale

USER NAME = keithbr	DESIGNED -	REVISED -	STATE OF ILLINOIS DEPARTMENT OF TRANSPORTATION
	DRAWN -	REVISED -	
PLOT SCALE = 0.1000 ' / in.	CHECKED -	REVISED -	
PLOT DATE = 12/15/2017	DATE -	REVISED -	

EXISTING PLAN AND PROFILE FOR INFORMATION ONLY

SCALE: SHEET OF SHEETS STA. TO STA.

F.A.P.	SECTION	COUNTY	TOTAL SHEETS	SHEET NO.
313	94(16,17)RS,48(17,18)RS	WARREN-KNOX	118	70
RTE US 34/IL 110		CONTRACT NO. 68339		
		ILLINOIS FED. AID PROJECT		

MODEL: Default
FILE NAME: pw:\\IL084EBIDINTEG.illinois.gov:PWIDOT\Documents\IDOT Offices\District 4\Projects\D4 68339\CADData\CADdrawings\alignment.dgn

ROUTE	SECTION	COUNTY	TOTAL SHEETS	SHEET NO.
F.A.404	*	KNOX	51	43
PROJ. [redacted] STA. 0+19.00 TO STA. 25+48.02				

48- (17, 18-1, 18K)

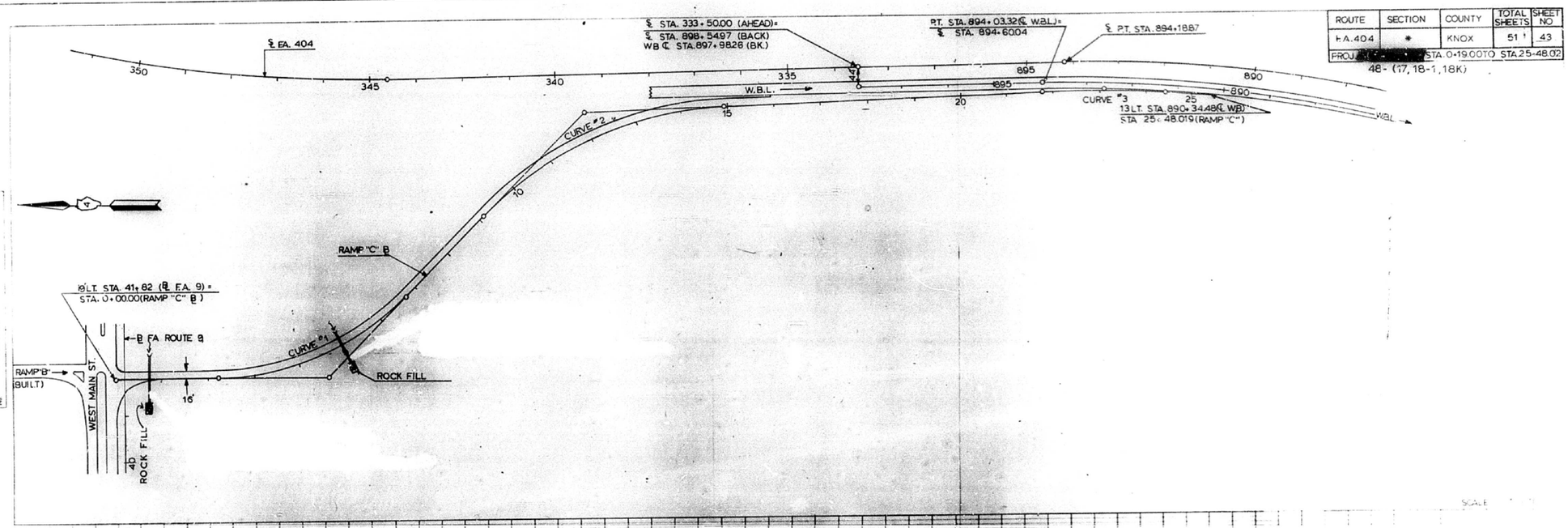

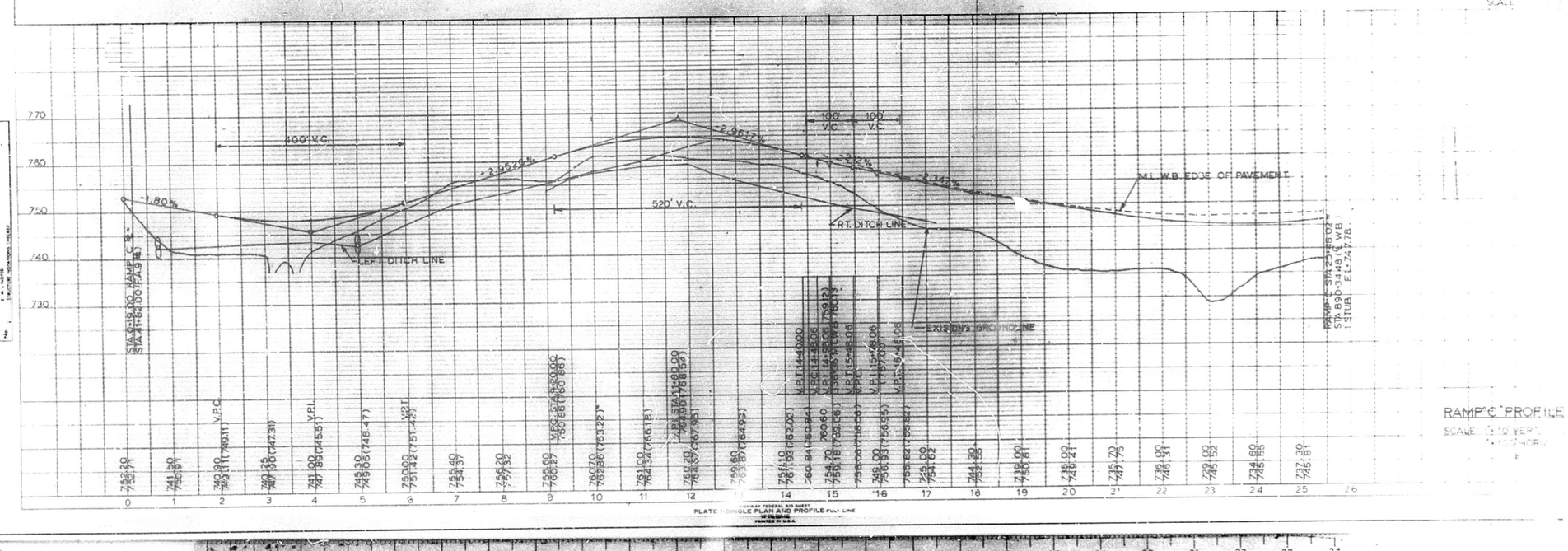

not to scale

USER NAME = keithbr	DESIGNED -	REVISED -
	DRAWN -	REVISED -
PLOT SCALE = 0.1000 ' / in.	CHECKED -	REVISED -
PLOT DATE = 12/15/2017	DATE -	REVISED -

STATE OF ILLINOIS
DEPARTMENT OF TRANSPORTATION

EXISTING PLAN AND PROFILE
FOR INFORMATION ONLY

SCALE: SHEET OF SHEETS STA. TO STA.

F.A.P.	SECTION	COUNTY	TOTAL SHEETS	SHEET NO.
313	94(16,17)RS,48(17,18)RS	WARREN-KNOX	118	71
RTE US 34/IL 110		CONTRACT NO. 68339		
		ILLINOIS	FED. AID PROJECT	

MODEL: Default
FILE NAME: pw:\\IL084EBIDINTEG.illinois.gov:PWIDOT\Documents\IDOT Offices\District 4\Projects\D4_68339\CADData\CADdrawings\alignment.dgn

ROUTE NO.	SECTION	COUNTY	TOTAL SHEETS	SHEET NO.
F.A.404	*	KNOX	51	44
STA. 0+00		TO	STA. 21+65.19	
KHMA. REG. NO. 4	ILLINOIS	PROJECT [redacted]		

48 - (17,18-1,18K)

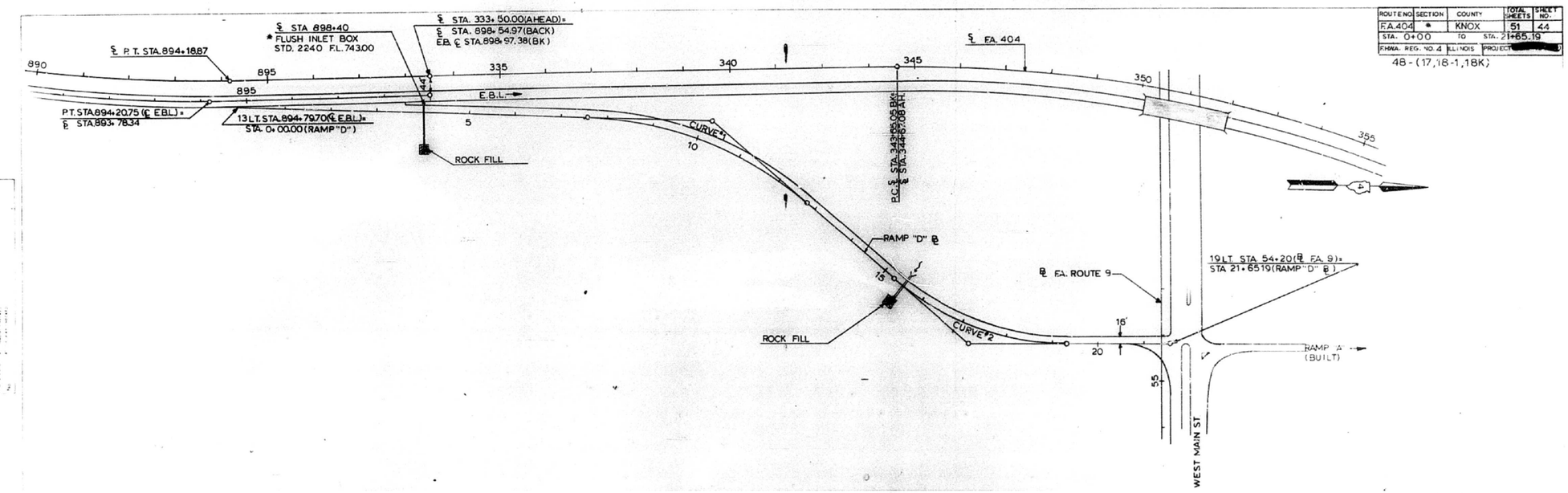

*GRATE TO BE BUILT BY OTHERS

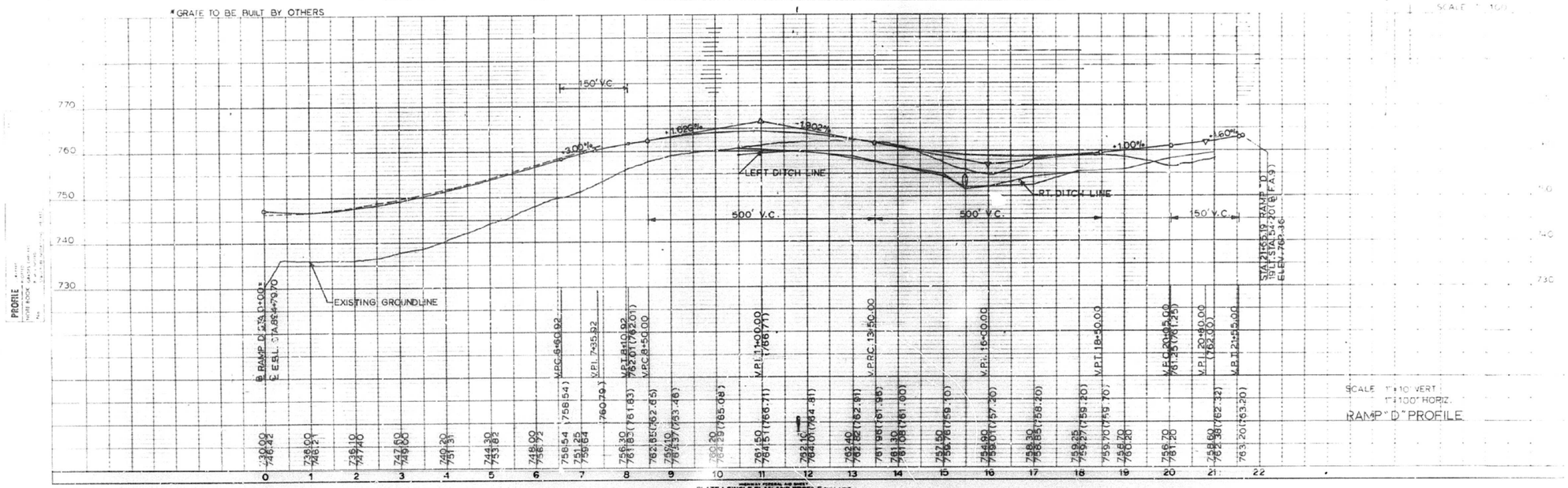

PLATE 1-SINGLE PLAN AND PROFILE-FULL LINE

not to scale

USER NAME = keithbr	DESIGNED -	REVISED -
	DRAWN -	REVISED -
PLOT SCALE = 0.1000 ' / in.	CHECKED -	REVISED -
PLOT DATE = 12/15/2017	DATE -	REVISED -

STATE OF ILLINOIS
DEPARTMENT OF TRANSPORTATION

EXISTING PLAN AND PROFILE
FOR INFORMATION ONLY

SCALE: SHEET OF SHEETS STA. TO STA.

F.A.P.	SECTION	COUNTY	TOTAL SHEETS	SHEET NO.
313	94(16,17)RS,48(17,18)RS	WARREN-KNOX	118	72
RTE US 34/IL 110		CONTRACT NO. 68339		
		ILLINOIS	FED. AID PROJECT	

MODEL: Default
FILE NAME: pw:\\IL084EBIDINTEG.illinois.gov:PWIDOT\Documents\IDOT Offices\District 4\Projects\D4_68339\CADData\CADdrawings\alignment.dgn

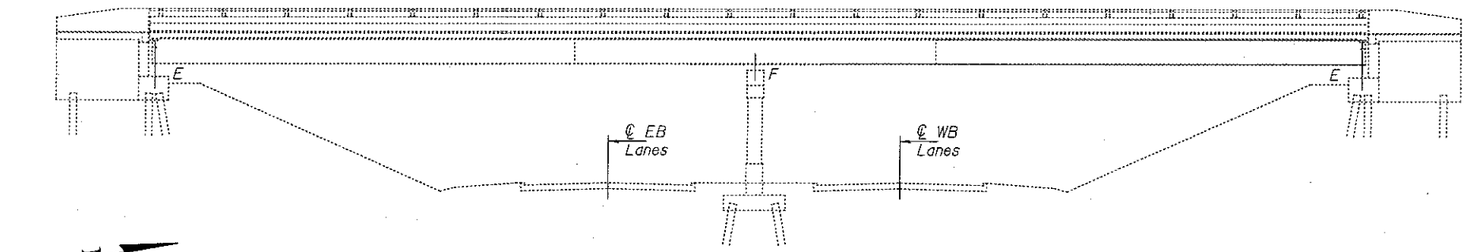

ELEVATION

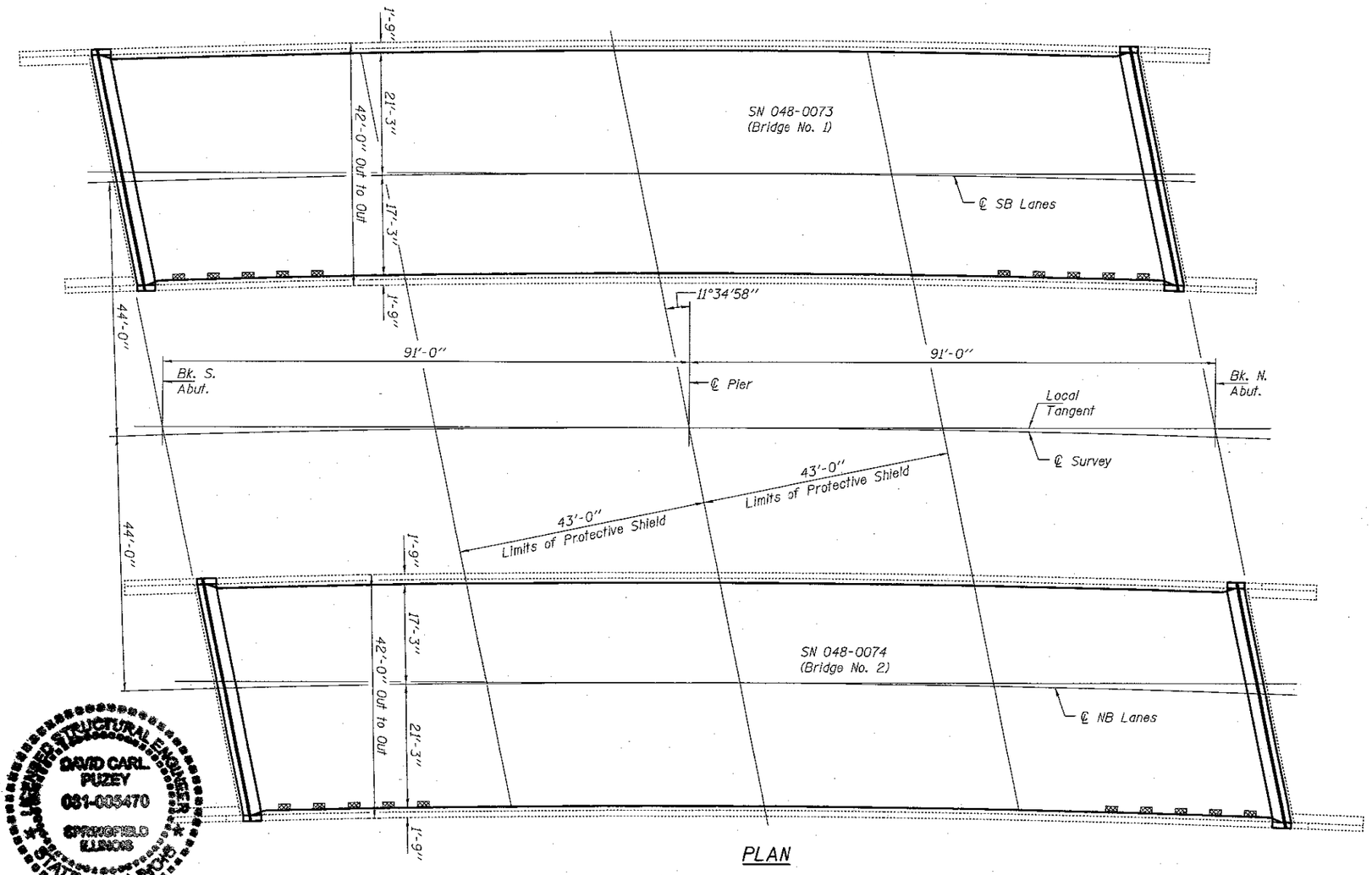

PLAN

GENERAL NOTES

All structural steel shall conform to AASHTO Classification M-270 Gr. 36, unless otherwise noted.

Reinforcement bars designated (E) shall be epoxy coated.

Prior to pouring the new concrete deck, all heavy or loose rust, loose mill scale, and other loose or potentially detrimental foreign material shall be removed from the surfaces in contact with concrete. Tightly adhered paint may remain unless otherwise noted. Removal shall be accomplished by methods that will not damage the steel and the cost will be included in the pay item covering removal of the existing concrete.

Plan dimensions and details relative to existing plans are subject to nominal construction variations. The Contractor shall field verify existing dimensions and details affecting new construction and make necessary approved adjustments prior to construction or ordering of materials. Such variations shall not be cause for additional compensation for a change in scope of the work, however, the Contractor will be paid for the quantity actually furnished at the unit price bid for the work.

Existing reinforcement bars extending into the removal area shall be cleaned, straightened and incorporated into the new construction. Any reinforcement bars that are damaged during concrete removal shall be replaced with an approved bar splicer or anchorage system. Cost included with Concrete Removal.

Synthetic fibers shall be added to the Bridge Deck Microsilica Concrete. See Special Provisions.

Joint openings shall be adjusted according to Article 520.04 of the Std. Specs. when the deck is poured at an ambient temperature other than 50° F.

The existing structural steel coating contains lead. The Contractor shall take appropriate precautions to deal with the presence of lead on this project.

Existing structural steel that will be in contact with new structural steel shall be cleaned and painted prior to erection as required by the special provision "Cleaning and Painting Contact Surface Areas of Existing Steel Structures".

Cleaning and painting of the existing structural steel shall be as specified in the special provision for "Cleaning and Painting Existing Steel Structures". Areas to be painted shall consist of all beam ends, end diaphragms, and steel components of bearings at the abutments. Beam end painting shall extend 5' from the ends of the beams longitudinally. Also included in the areas to be painted, the bottom beam flanges and 6" up the beam webs shall be painted out to 20' from the north ends of the beams at the north abutment. All areas to be painted shall be cleaned per near white blast cleaning per SSPC 10. All existing steel cleaned shall be painted according to the requirements of paint system 1 - OZ/E/U. The color of the final finish coat shall be green (Munsell 7.5G 4/8). The use of air monitors will be required.

A minimum of two air monitors will be required to monitor abrasive blasting operations.

The SSPC-QP1 and SSPC-QP2 painting contractor certifications will be required.

Care shall be taken not to damage rubber bearing or joint components during blasting and cleaning operations. Any damage to these components shall be repaired at the contractor's expense.

All work to be completed under road closure.

TOTAL BILL OF MATERIAL

	ITEM	UNIT	QUANTITY
	Concrete Removal	Cu. Yd.	25.5
	Concrete Superstructure	Cu. Yd.	24.1
	Preformed Joint Strip Seal	Foot	165
	Reinforcement Bars, Epoxy Coated	Pound	4440
*	Protective Coat	Sq. Yd.	60.0
	HMA Surface Removal, 1½"	Sq. Yd.	1494.5
	Bridge Deck Grooving	Sq. Yd.	1468.0
	Deck Slab Repair (Full Depth, Type I)	Sq. Yd.	5.6
	Structural Repair of Concrete (Depth ≤ 5")	Sq. Ft.	84.4
	Bridge Deck Scarification, ¾"	Sq. Yd.	1494.5
	Bridge Deck Microsilica Concrete Overlay, 2¼"	Sq. Yd.	1494.5
	Furnishing and Erecting Structural Steel	Pound	4190
	Elastomeric Bearing Assembly, Type I	Each	24
	Jack and Remove Existing Bearings	Each	24
	Anchor Bolts 1"ϕ	Each	48
	Containment and Disposal of Lead Paint Cleaning Residues Bridge No. 1	L. Sum	1
	Containment and Disposal of Lead Paint Cleaning Residues Bridge No. 2	L. Sum	1
	Cleaning and Painting Steel Bridge No. 1	L. Sum	1
	Cleaning and Painting Steel Bridge No. 2	L. Sum	1
	Concrete Structures	Cu. Yd.	10.0
	Mechanical Splicers	Each	10
	Protective Shield	Sq. Yd.	818.4

* On new concrete adjacent to joints only.

Note:

Areas of deck repairs shown are estimated. The Engineer shall show actual locations on "As Built" plans.

LICENSED STRUCTURAL ENGINEER
DAVID CARL PUZEY
081-005470
SPRINGFIELD ILLINOIS
STATE OF ILLINOIS

EXPIRES 11-30-2018

DESIGNED	Adrian T. Holloway	EXAMINED		DATE	JANUARY 17, 2018
CHECKED	Michael S. Roff		BY ENGINEER OF STRUCTURAL SERVICES		
DRAWN	baliva	PASSED		REVISED	
CHECKED	ATH MLD		ENGINEER OF BRIDGES AND STRUCTURES	REVISED	

STATE OF ILLINOIS
DEPARTMENT OF TRANSPORTATION

PLAN AND ELEVATION
FAP 313 (US 34/IL 110) OVER IL 164
SN 048-0073 & 0074
SHEET NO. 1 OF 17 SHEETS

F.A.P. RTE.	SECTION	COUNTY	TOTAL SHEETS	SHEET NO.
313	94(16, 17)RS, 48(17,18)RS	KNOX	118	73

CONTRACT NO. 68339

ILLINOIS FED. AID PROJECT

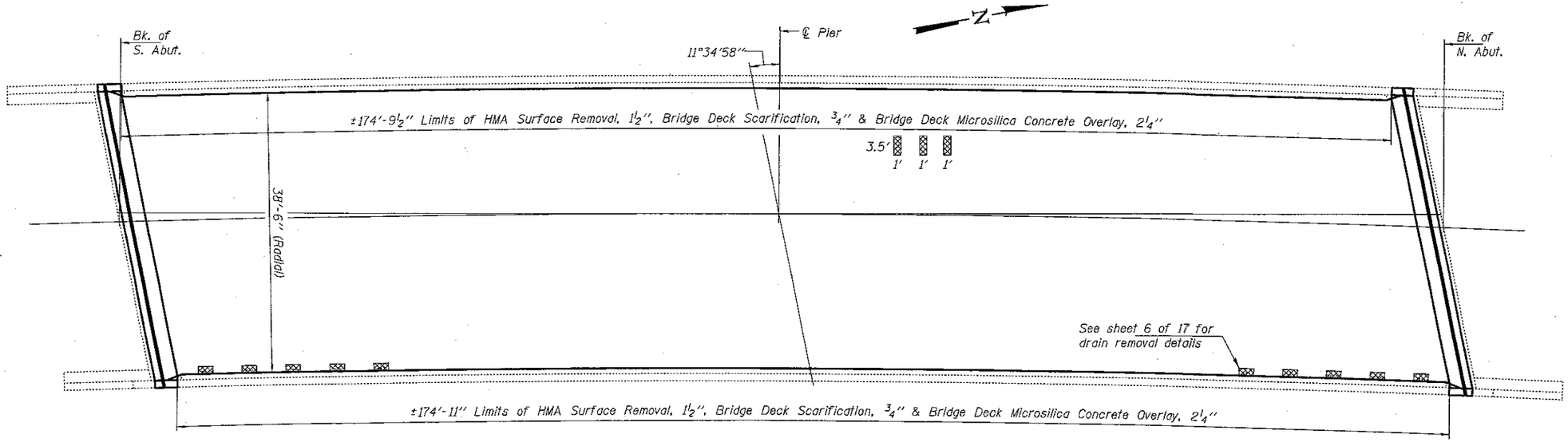

DECK REPAIR PLAN

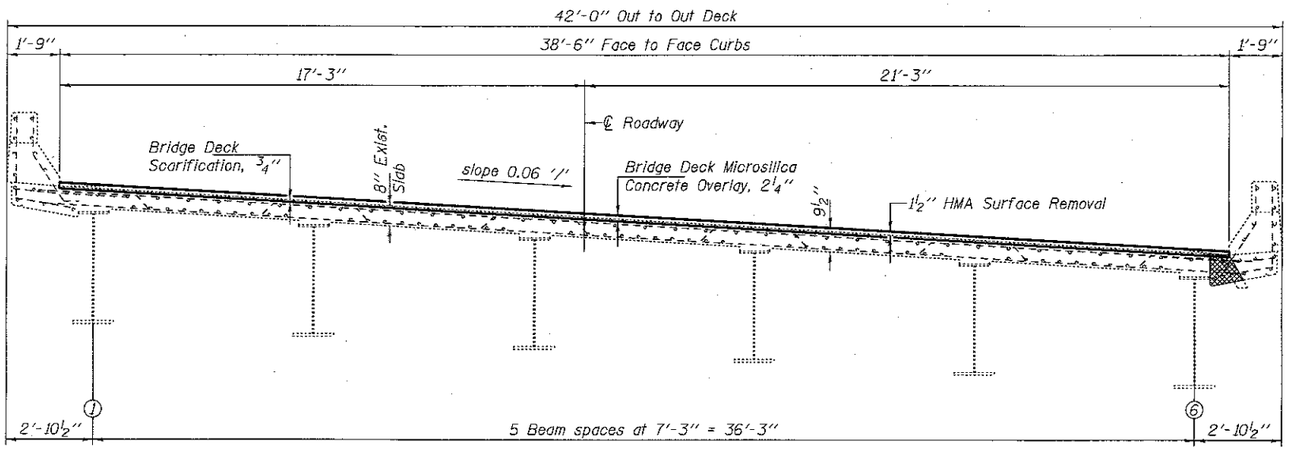

CROSS SECTION

(Looking North)

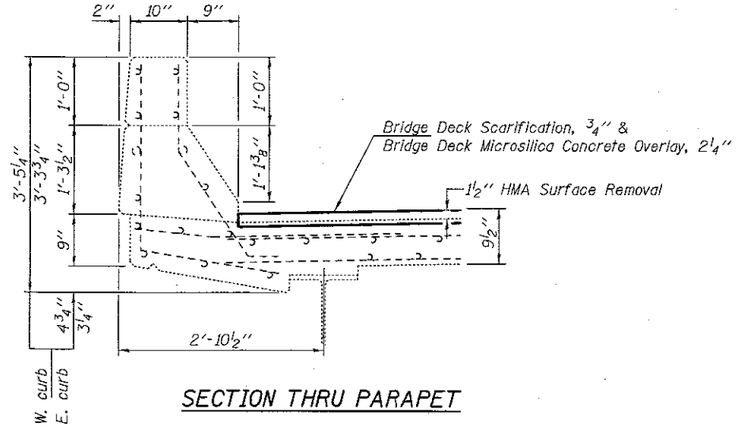

SECTION THRU PARAPET

BILL OF MATERIAL

Item	Unit	Quantity
HMA Surface Removal, 1½"	Sq. Yd.	748.0
Bridge Deck Scarification, ¾"	Sq. Yd.	748.0
Bridge Deck Microsilica Concrete Overlay, 2¼"	Sq. Yd.	748.0

Deck Slab Repair (Full Depth, Type I)

DESIGNED ATH	EXAMINED	ENGINEER OF STRUCTURAL SERVICES	DATE JANUARY 17, 2018
CHECKED MLD			
DRAWN baliva	PASSED	ENGINEER OF BRIDGES AND STRUCTURES	REVISED
CHECKED ATH MLD			REVISED

STATE OF ILLINOIS
DEPARTMENT OF TRANSPORTATION

REPAIR DETAILS
SN 048-0074

SHEET NO. 2 OF 17 SHEETS

F.A.P. RTE.	SECTION	COUNTY	TOTAL SHEETS	SHEET NO.
313	94(1)B, 17(RS, 48(17,18)RS	KNOX	118	74

CONTRACT NO. 68339

ILLINOIS FED. AID PROJECT

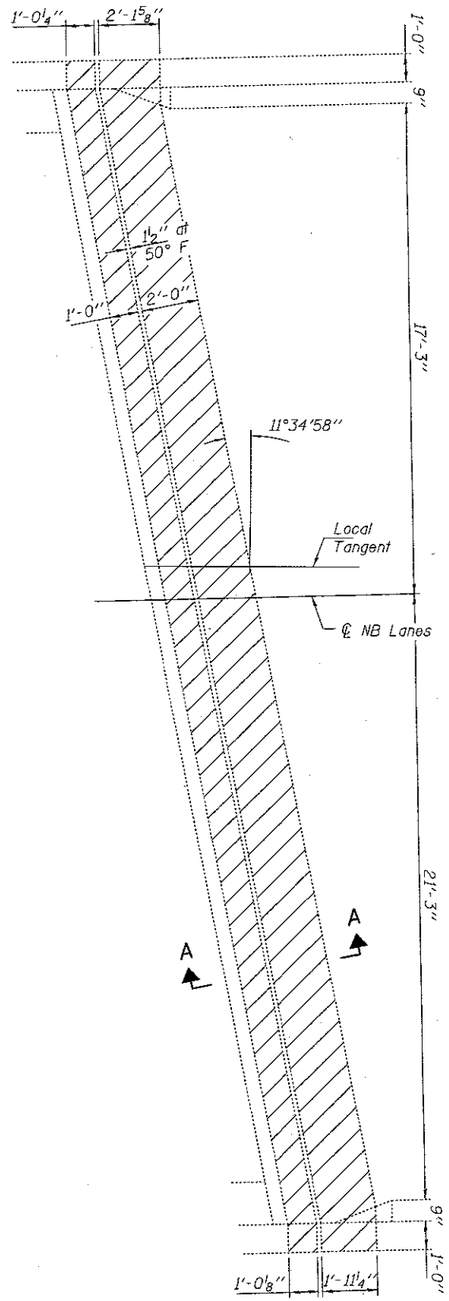

REMOVAL PLAN

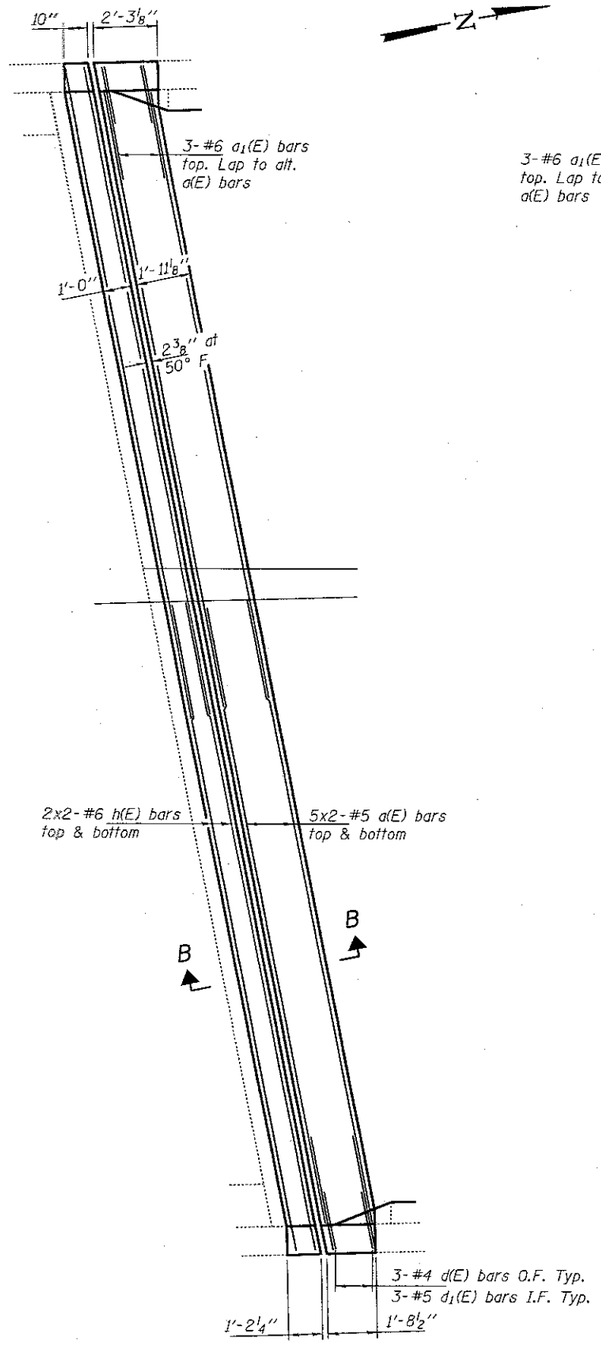

REPLACEMENT PLAN

SOUTH ABUTMENT

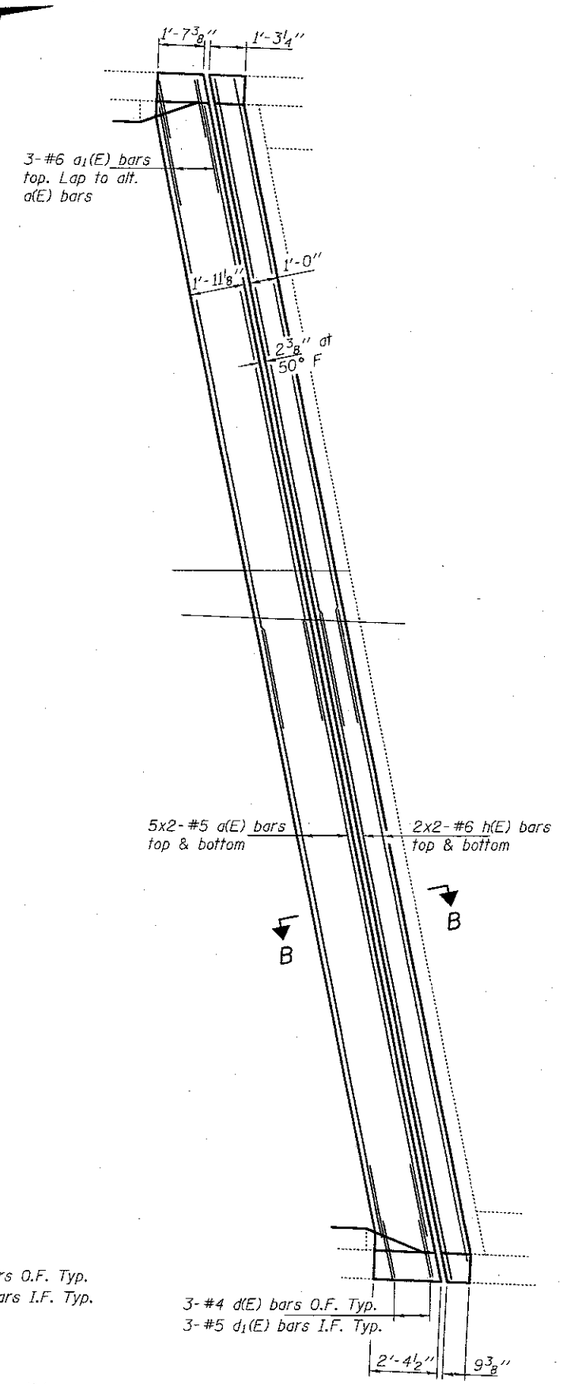

REPLACEMENT PLAN

Notes:
Horizontal dimensions are Radial
Hatched areas indicate removal.

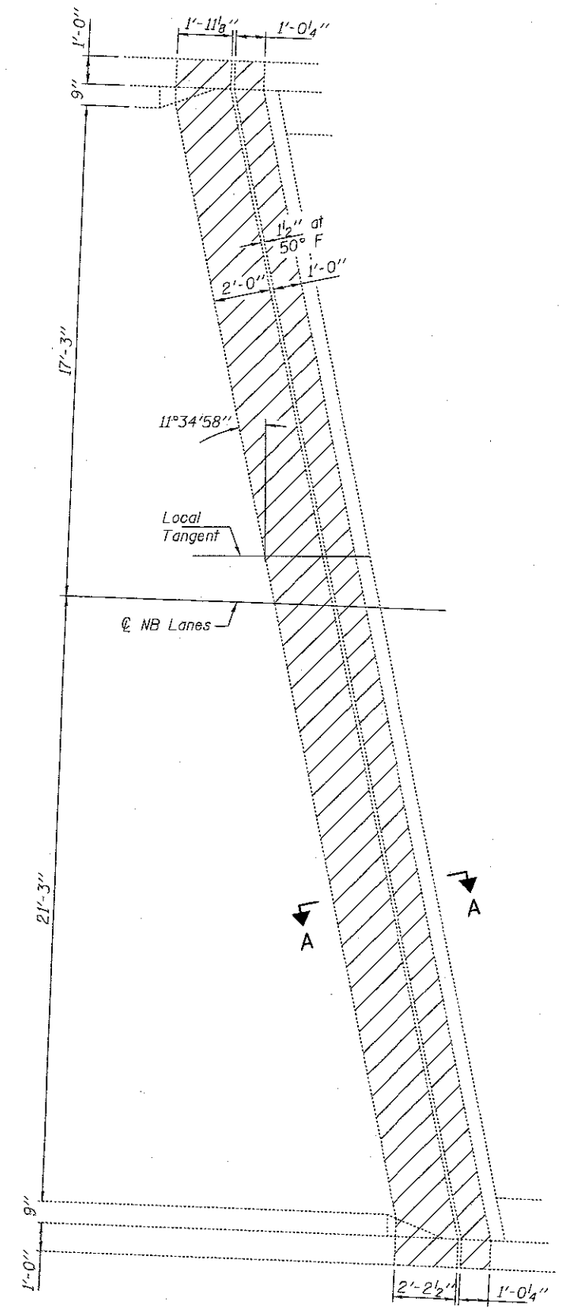

REMOVAL PLAN

NORTH ABUTMENT

See sheet 6 of 17 for Sections A-A & B-B

DESIGNED ATH	EXAMINED	ENGINEER OF STRUCTURAL SERVICES	DATE JANUARY 17, 2018	STATE OF ILLINOIS DEPARTMENT OF TRANSPORTATION	REPAIR DETAILS SN 048-0074	F.A.P. RTE.	SECTION	COUNTY	TOTAL SHEETS / SHEET NO.
CHECKED MLD						313	94(1)S, 17(RS, 48(1)7,18)RS	KNOX	118 / 75
DRAWN baliva	PASSED	ENGINEER OF BRIDGES AND STRUCTURES	REVISED					CONTRACT NO. 68339	
CHECKED ATH MLD			REVISED		SHEET NO. 3 OF 17 SHEETS			ILLINOIS FED. AID PROJECT	

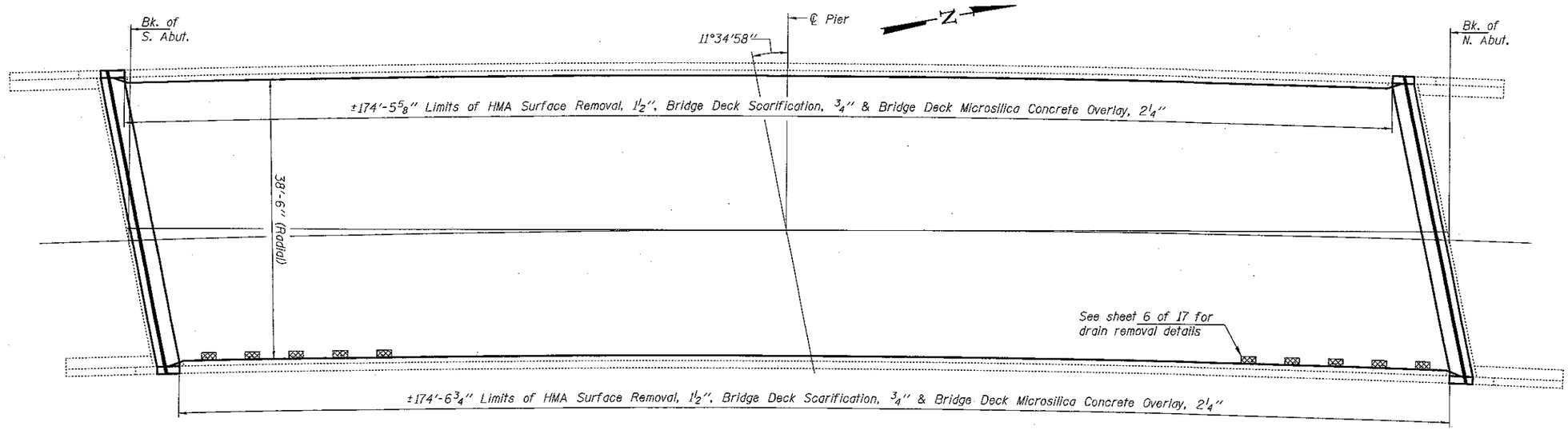

DECK REPAIR PLAN

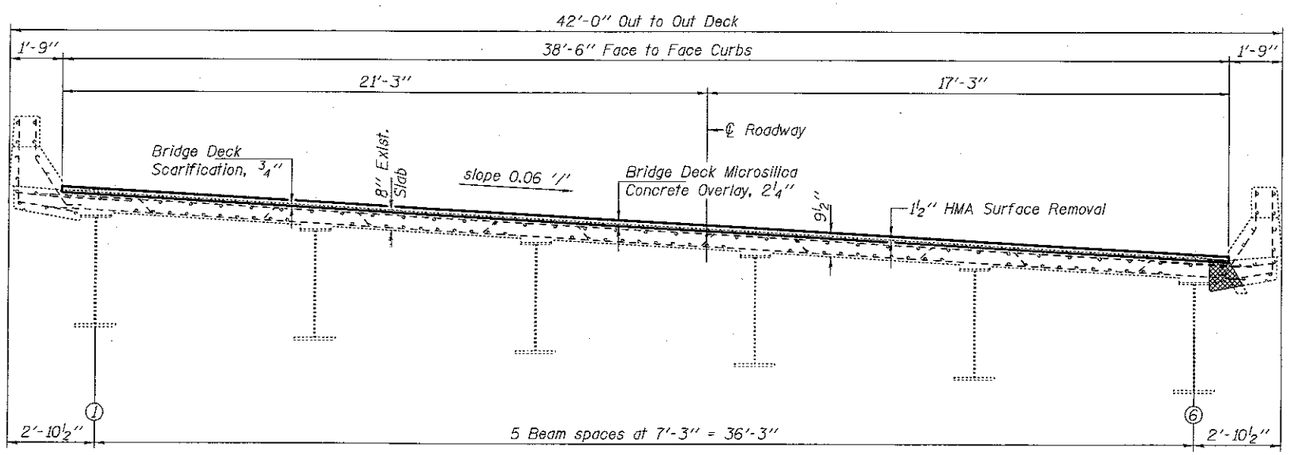

CROSS SECTION

(Looking North)

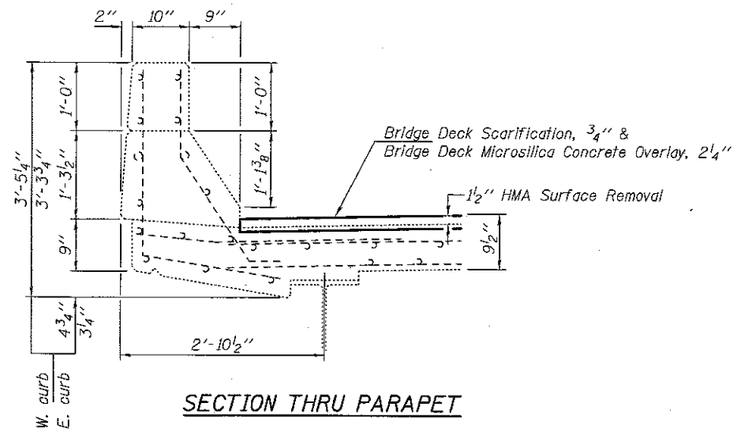

SECTION THRU PARAPET

BILL OF MATERIAL

Item	Unit	Quantity
HMA Surface Removal, 1 1/2"	Sq. Yd.	746.5
Bridge Deck Scarification, 3/4"	Sq. Yd.	746.5
Bridge Deck Microsilica Concrete Overlay, 2 1/4"	Sq. Yd.	746.5

Deck Slab Repair (Full Depth, Type I)

DESIGNED ATH	EXAMINED	ENGINEER OF STRUCTURAL SERVICES	DATE JANUARY 17, 2018
CHECKED MLD			
DRAWN baliva	PASSED	ENGINEER OF BRIDGES AND STRUCTURES	REVISED
CHECKED ATH MLD			REVISED

STATE OF ILLINOIS
DEPARTMENT OF TRANSPORTATION

REPAIR DETAILS
SN 048-0073

SHEET NO. 4 OF 17 SHEETS

F.A.P. RTE.	SECTION	COUNTY	TOTAL SHEETS	SHEET NO.
313	94(16, 17)RS, 48(17,18)RS	KNOX	118	76

CONTRACT NO. 68339

ILLINOIS FED. AID PROJECT

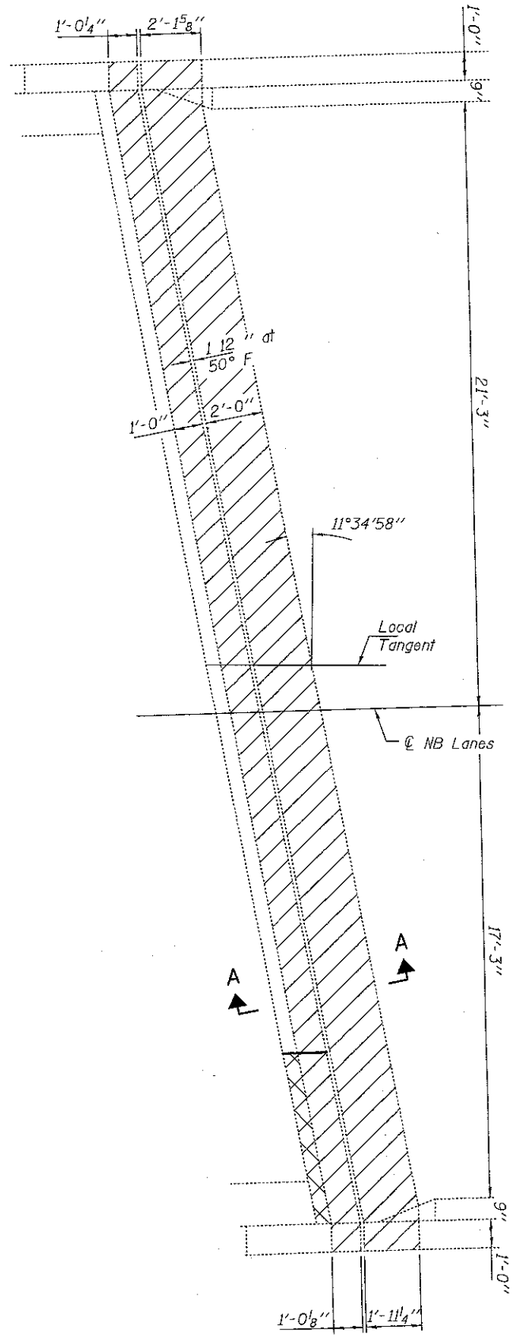

REMOVAL PLAN

Crosshatched areas indicate backwall repair. See sheet 9 of 17.

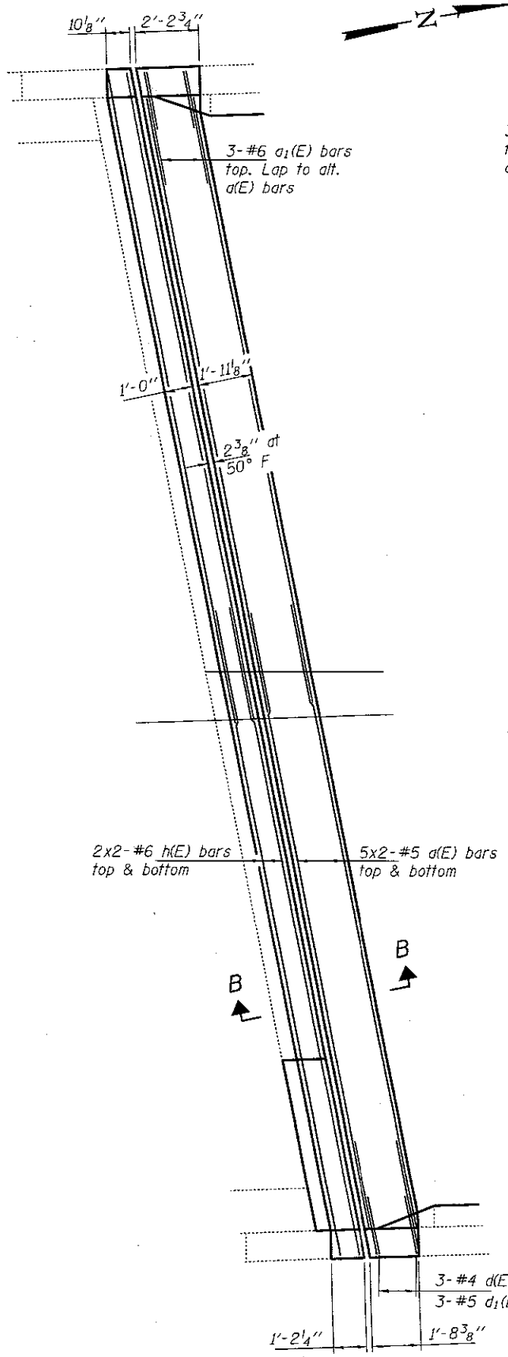

REPLACEMENT PLAN

SOUTH ABUTMENT

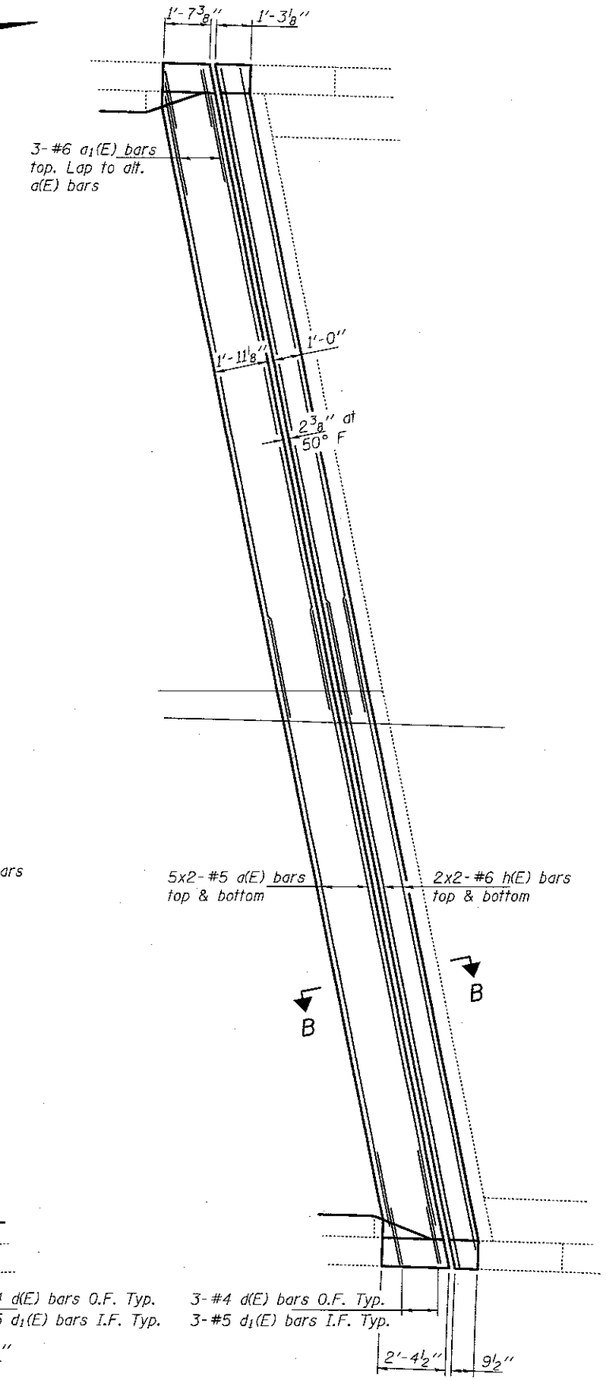

REPLACEMENT PLAN

Notes:
Horizontal dimensions are Radial
Hatched areas indicate removal.

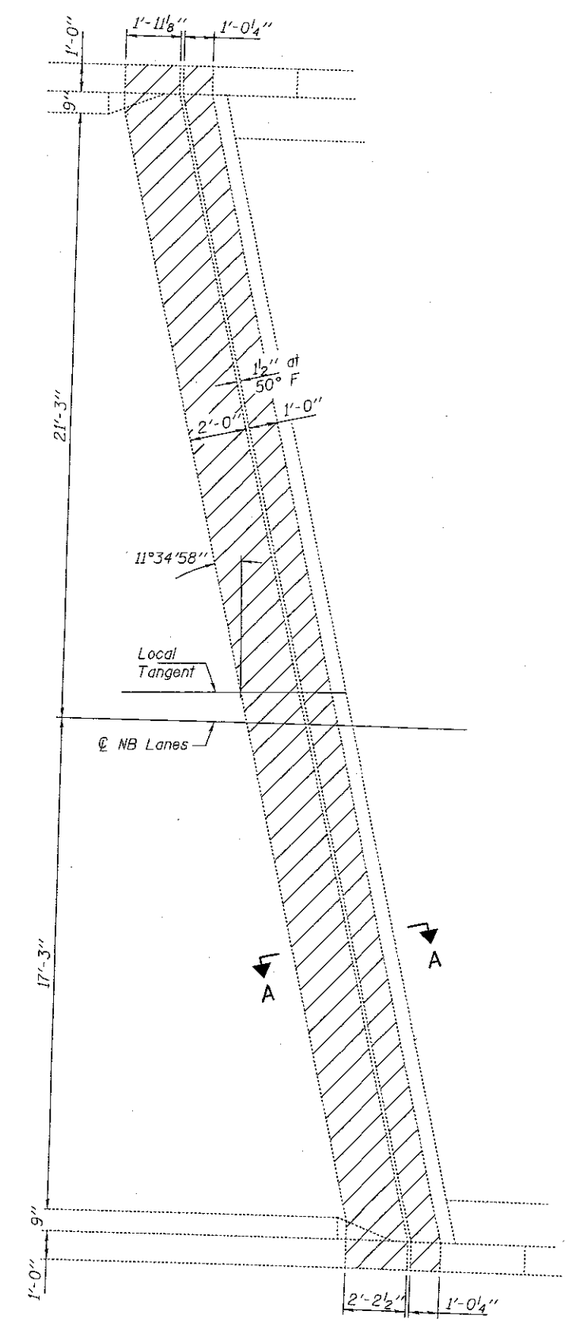

REMOVAL PLAN

NORTH ABUTMENT

See sheet 6 of 17 for Sections A-A & B-B

DESIGNED ATH	EXAMINED	DATE JANUARY 17, 2018	STATE OF ILLINOIS DEPARTMENT OF TRANSPORTATION
CHECKED MLD	ENGINEER OF STRUCTURAL SERVICES	REVISED	
DRAWN baliva	PASSED	REVISED	
CHECKED ATH MLD	ENGINEER OF BRIDGES AND STRUCTURES		

REPAIR DETAILS
SN 048-0073

SHEET NO. 5 OF 17 SHEETS

F.A.P. RTE.	SECTION	COUNTY	TOTAL SHEETS	SHEET NO.
313	94(16, 17)RS, 48(17,18)RS	KNOX	118	77

CONTRACT NO. 68339

ILLINOIS FED. AID PROJECT

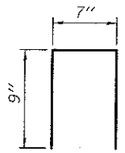

BAR $d_2(E)$

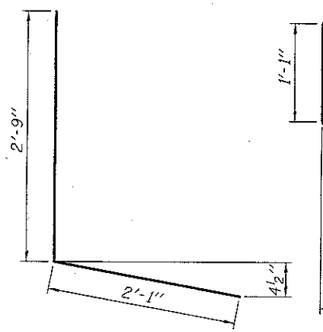

BAR d(E)

BAR $d_1(E)$

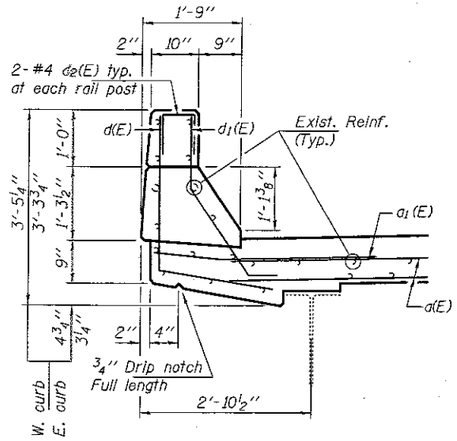

TYPICAL PARAPET SECTION

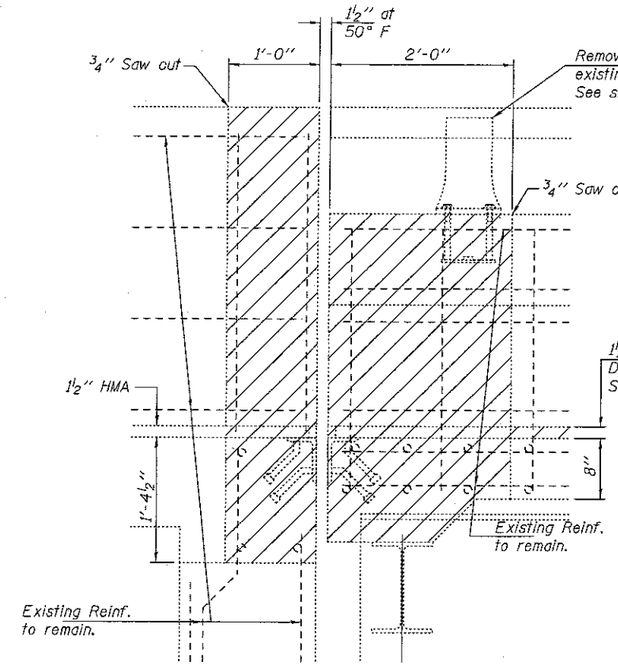

SECTION A-A

(Dimensions are at RT L's to end of deck)

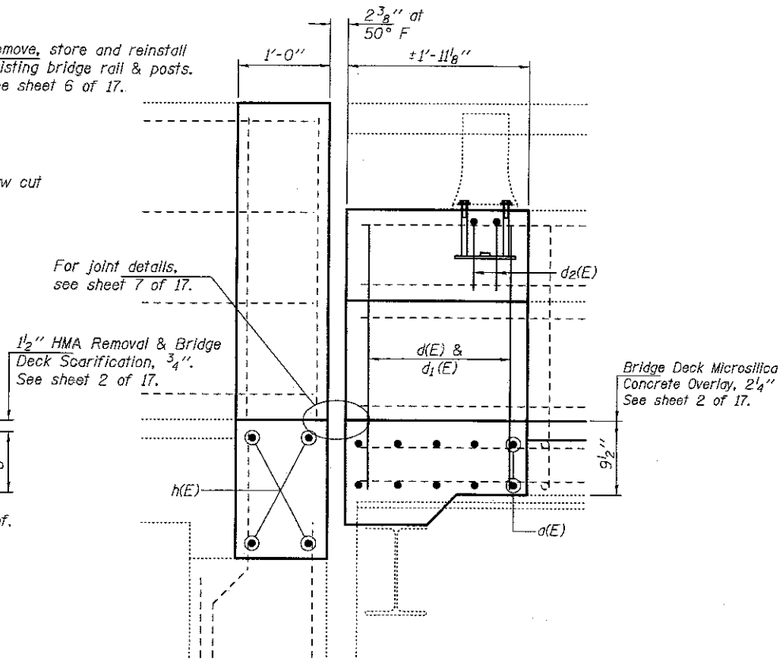

SECTION B-B

(Dimensions are at RT L's to end of deck)

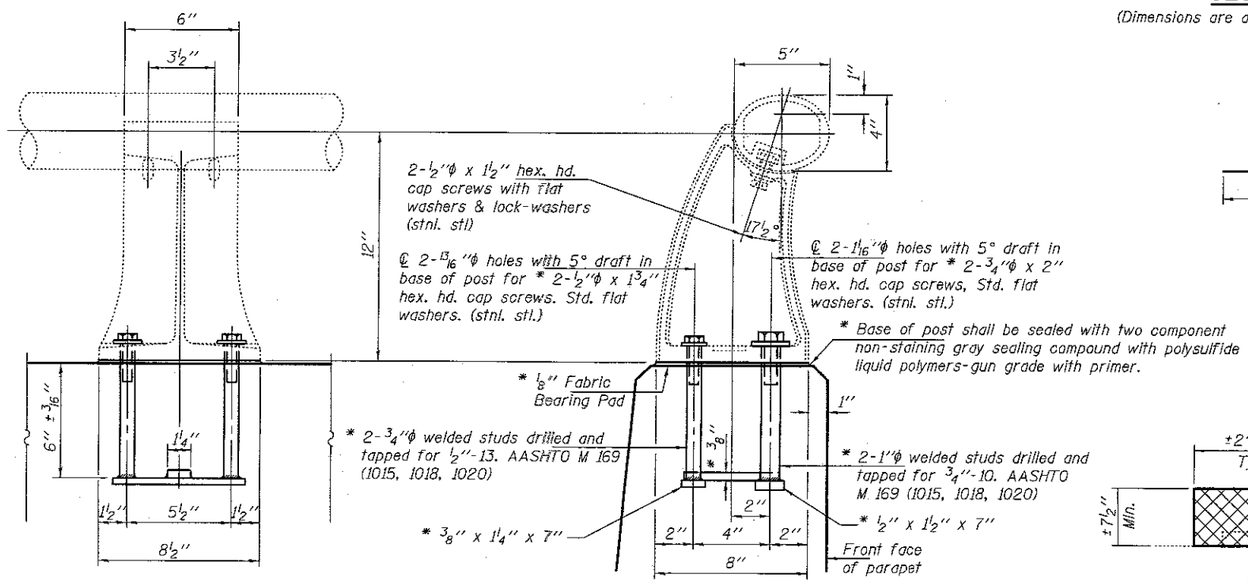

RAIL POST DETAILS

* New Rail Post anchorage devices will be required at each location where posts are connected to new construction. Cost included with Concrete Superstructure.

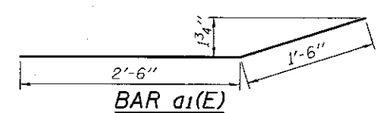

BAR $a_1(E)$

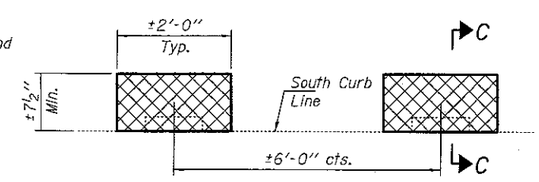

PLAN

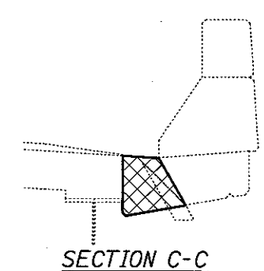

SECTION C-C

DRAIN ELIMINATION DETAIL

Cross hatched areas indicate Deck Slab Repair (Full Depth, Type I).

MIN. BAR LAPS

#5 Bar = 3'-6"
#6 Bar = 4'-0"

BILL OF MATERIAL

Bar	No.	Size	Length	Shape
d(E)	80	#5	22'-6"	
$a_1(E)$	24	#6	4'-0"	
d(E)	24	#4	4'-7"	
$d_1(E)$	24	#5	3'-7"	
$d_2(E)$	16	#4	2'-1"	
h(E)	32	#6	23'-6"	
$h_1(E)$	10	#5	5'-3"	
v(E)	7	#5	3'-9"	
Concrete Removal			Cu. Yd.	25.5
Concrete Superstructure			Cu. Yd.	24.1
Reinforcement Bars, Epoxy Coated			Lbs.	3420
Concrete Structures			Cu. Yd.	1.4

DESIGNED ATH	EXAMINED Timothy A. Bridges ENGINEER OF STRUCTURAL SERVICES	DATE JANUARY 17, 2018	STATE OF ILLINOIS DEPARTMENT OF TRANSPORTATION
CHECKED MLD	PASSED D. Carl Puzey ENGINEER OF BRIDGES AND STRUCTURES	REVISED	
DRAWN baliva		REVISED	
CHECKED ATH MLD			

REPAIR DETAILS
SN 048-0073 & 0074

SHEET NO. 6 OF 17 SHEETS

F.A.P. RTE.	SECTION	COUNTY	TOTAL SHEETS	SHEET NO.
313	94(16, 17)RS, 48(17,18)RS	KNOX	118	78

CONTRACT NO. 68339

ILLINOIS FED. AID PROJECT

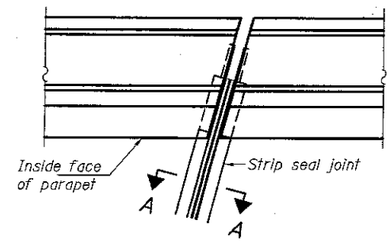

FOR SKEWS = 30°

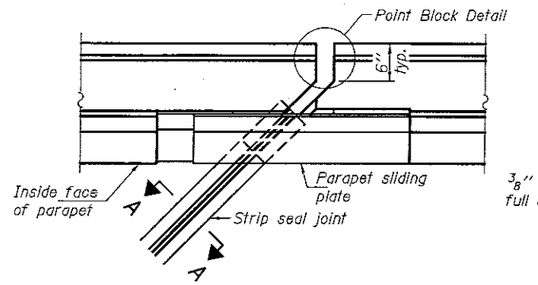

FOR SKEWS > 30°

PLAN AT PARAPET

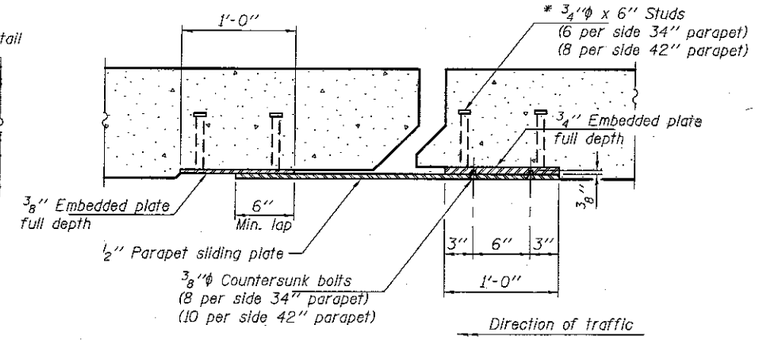

SECTION B-B

Notes:

The strip seal shall be made continuous and shall have a minimum thickness of 1/4". The configuration of the strip seal shall match the configuration of the locking edge rails. Open or "webbed" strip seal gland configurations are not permitted. The gland shall be sized for a maximum rated movement of 4 inches.

The locking edge rails depicted are configured for typical applications and are conceptual only. The actual configuration of the locking edge rails and matching strip seal may vary from manufacturer to manufacturer provided they fit the application and meet the minimum anchorage shown. Flanged edge rails, however, will not be allowed. Locking edge rails may exceed the 4 1/2" maximum depth provided the anchorage system is revised according to the manufacturer's recommendation.

The manufacturer's recommended installation methods shall be followed.

All steel components shall be galvanized after fabrication according to Article 520.03 of the Standard Specifications.

The Maximum space between locking edge rail segments shall be 3/16" and sealed with a suitable sealant; however, any rail joint within 10' measured perpendicular to the face of the curb or parapet shall be welded as shown in the locking edge rail splice detail.

Cost of parapet sliding plates, embedded plates, and anchorage studs included with Preformed Joint Strip Seal.

34" F-shape barrier shown, 42" F-shape similar as noted.

The concrete opening below the strip seal will vary based on the locking edge rail chosen by the Contractor. Deck and parapet lengths shown elsewhere in the plans are dimensioned to the concrete opening, not the joint opening, and are based on the rolled locking edge rail. If the Contractor elects to use a different locking edge rail, dimensional adjustments may be required. One exception to this would be the strip seal joint at the end of the precast bridge approach slab. For these cases the pavement connector length shall be adjusted, not the length of the bridge approach slab.

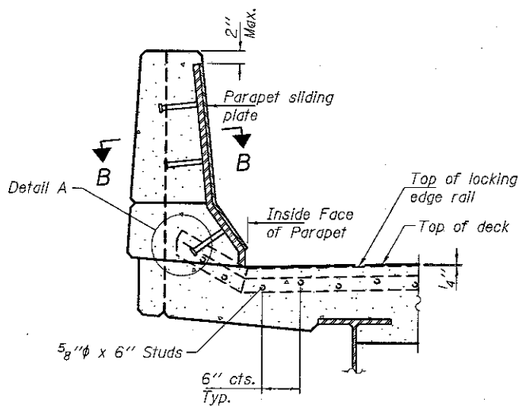

ELEVATION AT PARAPET

(Skews > 30° shown. Skews ≤ 30° similar except as shown in plan view.)

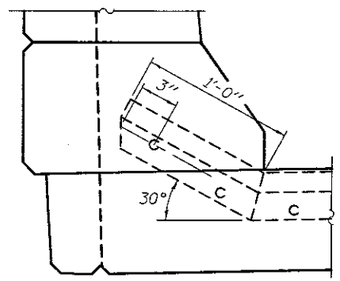

DETAIL A

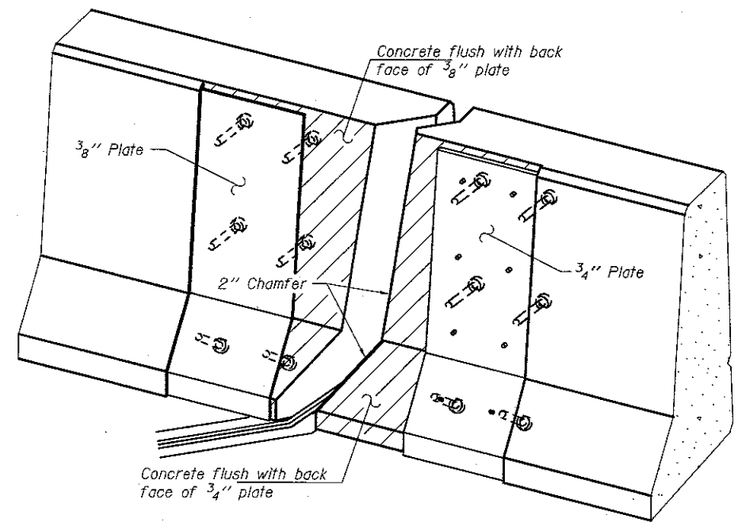

TRIMETRIC VIEW

(Showing embedded plates only)

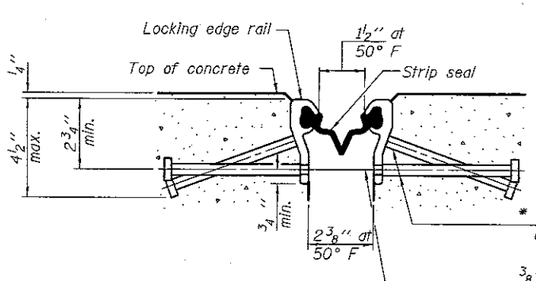

* 5/8"ϕ x 6" studs at 6" cts. (alternate angled/bent studs with horizontal studs)

3/8"ϕ threaded rods in 7/16"ϕ holes at ±4'-0" cts. for holding the proper joint opening based on the temperature during the deck pour. Place to miss studs. All rods shall be burned, or sawed off flush with the plates after concrete is set.

SHOWING ROLLED RAIL JOINT

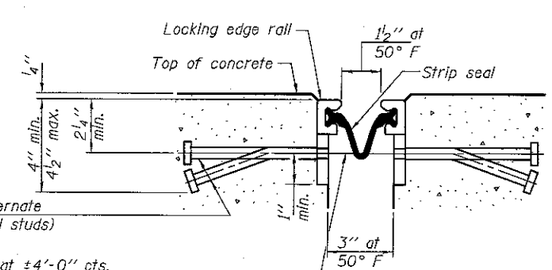

SHOWING WELDED RAIL JOINT

SECTION A-A

* Granular or solid flux filled headed studs conforming to Article 1006.32 of the Std. Specs., automatically end welded.

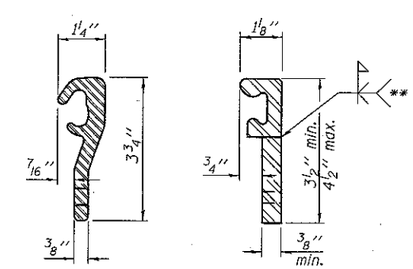

ROLLED (EXTRUDED) RAIL

WELDED RAIL

LOCKING EDGE RAILS

** Back gouge not required if complete joint penetration is verified by mock-up.

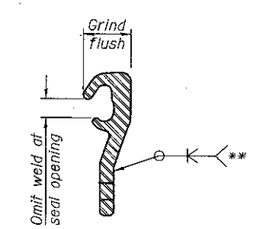

LOCKING EDGE RAIL SPLICE

The inside of the locking edge rail groove shall be free of weld residue. Rolled rail shown, welded rail similar.

BILL OF MATERIAL

Item	Unit	Total
Preformed Joint Strip Seal	Foot	165

EJ-SS 8-11-17

DESIGNED ATH	EXAMINED	ENGINEER OF STRUCTURAL SERVICES	DATE JANUARY 17, 2018
CHECKED MLD	PASSED	ENGINEER OF BRIDGES AND STRUCTURES	REVISED
DRAWN baliva			REVISED
CHECKED ATH MLD			

STATE OF ILLINOIS
DEPARTMENT OF TRANSPORTATION

PREFORMED JOINT STRIP SEAL
SN 048-0073 & 0074

SHEET NO. 7 OF 17 SHEETS

F.A.P. RTE.	SECTION	COUNTY	TOTAL SHEETS	SHEET NO.
313	94(16, 17)RS, 48(17,18)RS	KNOX	118	79

CONTRACT NO. 68339

ILLINOIS FED. AID PROJECT

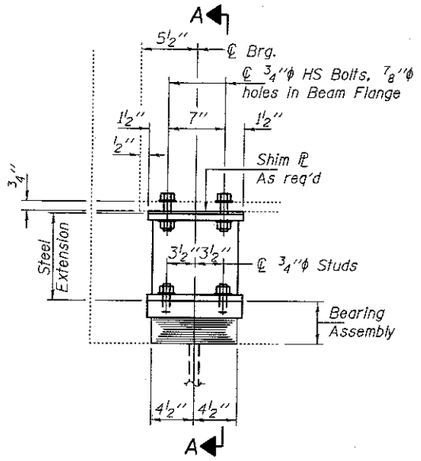

ELEVATION AT ABUTMENT

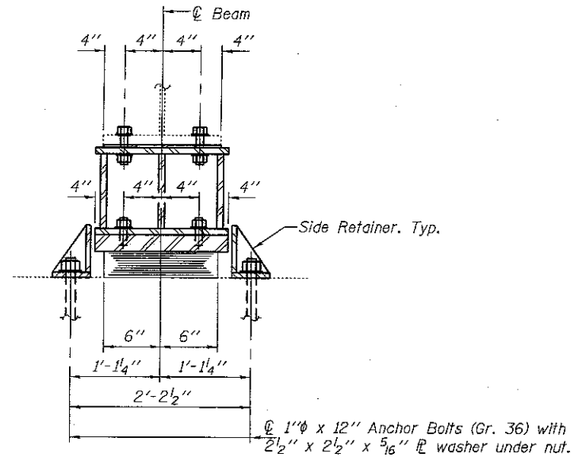

SECTION A-A

BEAM REACTIONS

R℄	(K)	44.9
R℄	(K)	41.5
Imp.	(K)	9.7
R (Total)	(K)	96.1

Notes:

Diaphragm removal and reinstallation may be required to facilitate drilling holes. Cost included with Furnishing and Erecting Structural Steel.

New steel extensions, shim plates and connection bolts are included with Furnishing and Erecting Structural Steel.

Prior to ordering any material, the Contractor shall verify in the field all bearing height and shim thickness dimensions. Adjustment must account for deck heave due to pack rust (if present).

Min. jack capacity = 35 Tons.

Anchor bolts shall be ASTM F1554 all-thread (or an Engineer-approved alternate material) of the grade(s) and diameter(s) specified. ASTM A307 Grade C anchor bolts may be used in lieu of ASTM F1554 Grade 36 (Fy=36ksi). The corresponding specified grade of AASHTO M314 anchor bolts may be used in lieu of ASTM F1554.

Anchor bolts at fixed bearings may be either cast in place or installed in holes drilled after the supported member is in place.

Drilled and set anchor bolts shall be installed according to Article 521.06 of the Standard Specifications.

Cost of Side retainers and Stainless Steel plates shall be included in the cost of Elastomeric Bearing Assembly, Type I.

All new Structural Steel and bearing assembly shall be hot-dip galvanized. See Special Provision for "Hot Dip Galvanizing for Structural Steel".

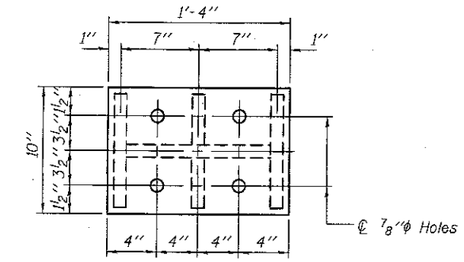

PLAN TOP AND BOTTOM PLATE

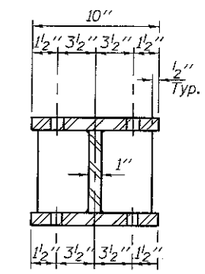

SECTION B-B

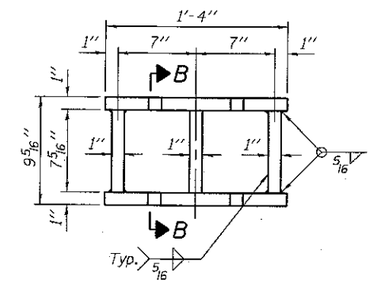

STEEL EXTENSION DETAIL

TYPE I ELASTOMERIC EXP. BRG.

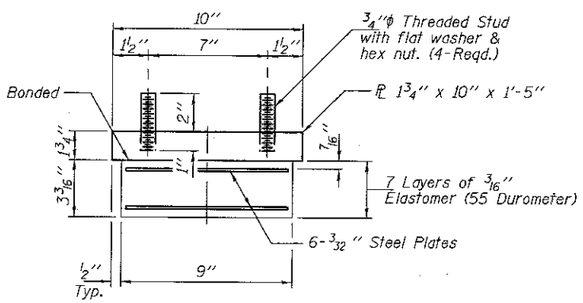

BEARING ASSEMBLY

Note:
Shim plates shall not be placed under Bearing Assembly.

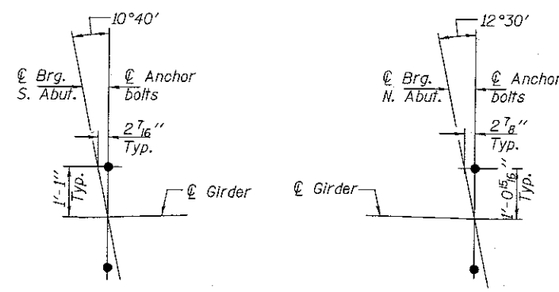

BEARING ORIENTATION

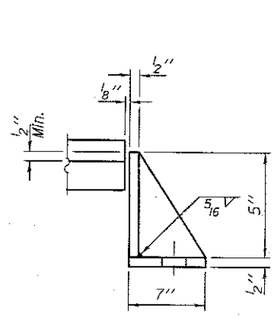

SIDE RETAINER

Equivalent rolled angle with stiffeners will be allowed in lieu of welded plates.

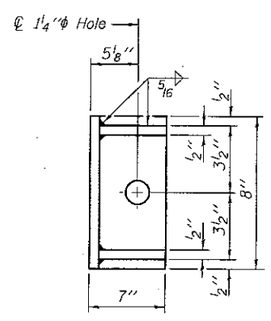

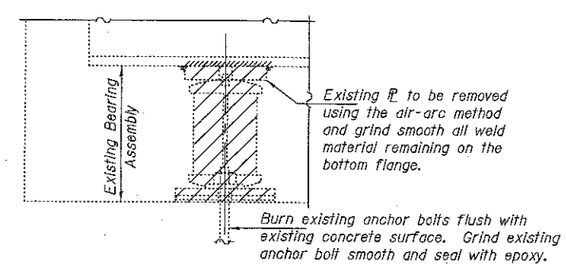

EXISTING BEARING REMOVAL DETAIL

Cost included with Jack and Remove Existing Bearings.

BILL OF MATERIAL

Item	Unit	Total
Elastomeric Bearing Assembly, Type I	Each	24
Jack and Remove Existing Bearings	Each	24
Furnishing and Erecting Structural Steel	Pound	4190
Anchor Bolts 1"φ	Each	48

TYI/REPS 1-18-2017

DESIGNED ATH	EXAMINED	ENGINEER OF STRUCTURAL SERVICES	DATE JANUARY 17, 2018
CHECKED MLD	PASSED	ENGINEER OF BRIDGES AND STRUCTURES	REVISED
DRAWN baliva			REVISED
CHECKED ATH MLD			

STATE OF ILLINOIS
DEPARTMENT OF TRANSPORTATION

ABUTMENT BEARING REPLACEMENT DETAILS
SN 048-0073 & 0074

SHEET NO. 8 OF 17 SHEETS

F.A.P. RTE.	SECTION	COUNTY	TOTAL SHEETS	SHEET NO.
313	94(16, 17)RS, 48(17,18)RS	KNOX	118	80

CONTRACT NO. 68339

ILLINOIS FED. AID PROJECT

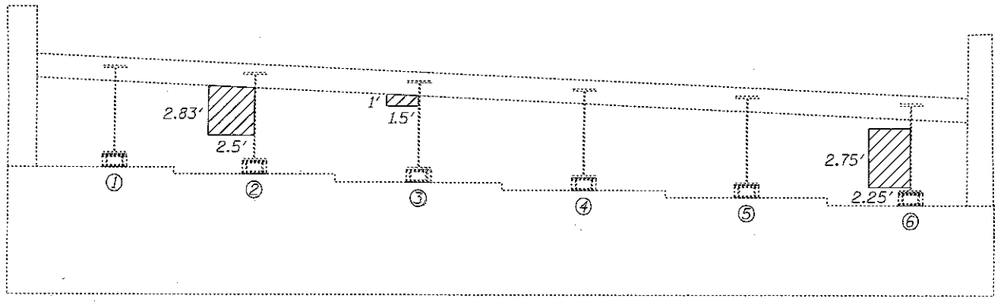

NORTH ABUTMENT
(Looking North)

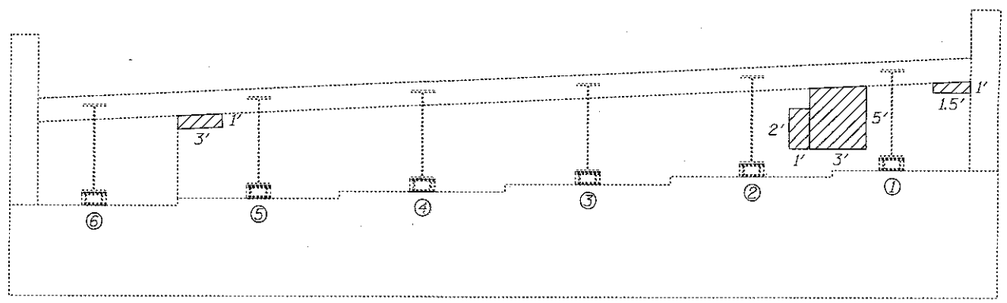

SOUTH ABUTMENT
(Looking South)

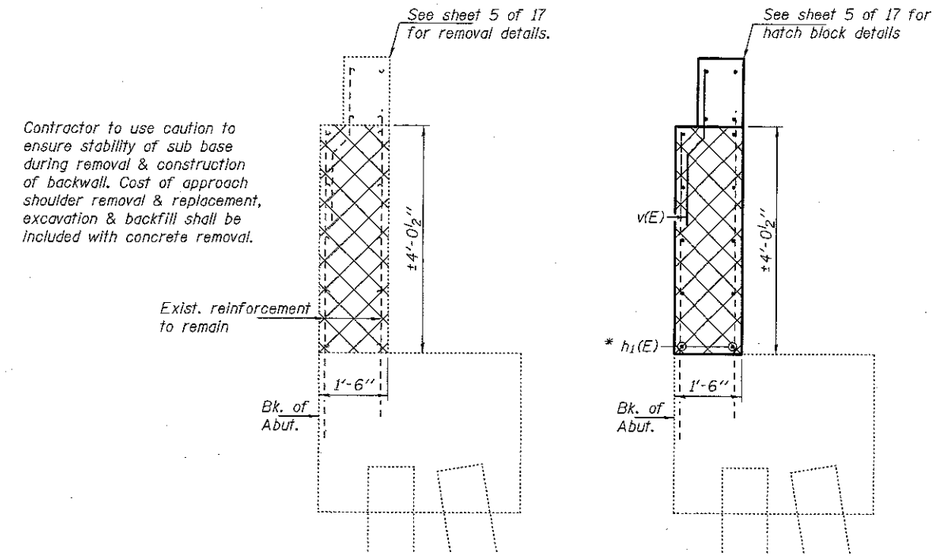

SECTION A-A

SECTION B-B

* Cut existing horizontal reinforcement in backwall 6'' from removal line for installation of mechanical splicer.

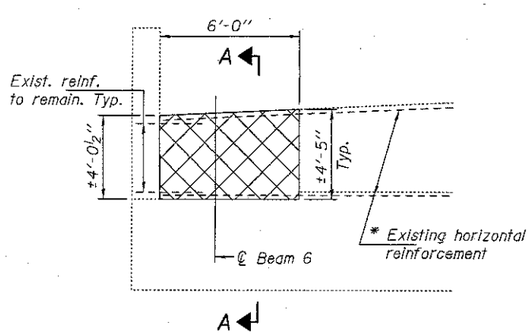

PARTIAL BACKWALL REMOVAL

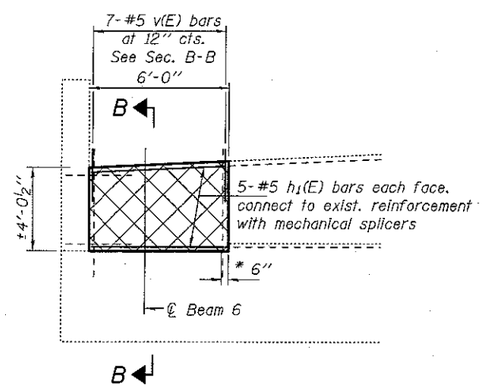

PARTIAL BACKWALL REPLACEMENT

PARTIAL ELEVATION AT SOUTH ABUTMENT
(Looking South)

Quantities for Concrete Removal, Concrete Structures, $h_1(E)$ bars & v(E) bars is included in Bill of Material on sheet 6 of 17.

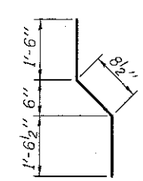

BAR v(E)

- Concrete Removal & Concrete Structures
- Structural Repair of Concrete (Depth ≤ 5'')

Item	Unit	Total
Structural Repair of Concrete (Depth ≤ 5'')	Sq. Ft.	36.3

DESIGNED ATH	EXAMINED Timothy A. Bulick ENGINEER OF STRUCTURAL SERVICES	DATE JANUARY 17, 2018	STATE OF ILLINOIS DEPARTMENT OF TRANSPORTATION
CHECKED MLD			
DRAWN baliva	PASSED A. Carl Prugy ENGINEER OF BRIDGES AND STRUCTURES	REVISED	
CHECKED ATH MLD		REVISED	

SUBSTRUCTURE REPAIR DETAILS
SN 048-0073

SHEET NO. 9 OF 17 SHEETS

F.A.P. RTE.	SECTION	COUNTY	TOTAL SHEETS	SHEET NO.
313	94(16, 17)RS, 48(17,18)RS	KNOX	118	81

CONTRACT NO. 68339

ILLINOIS FED. AID PROJECT

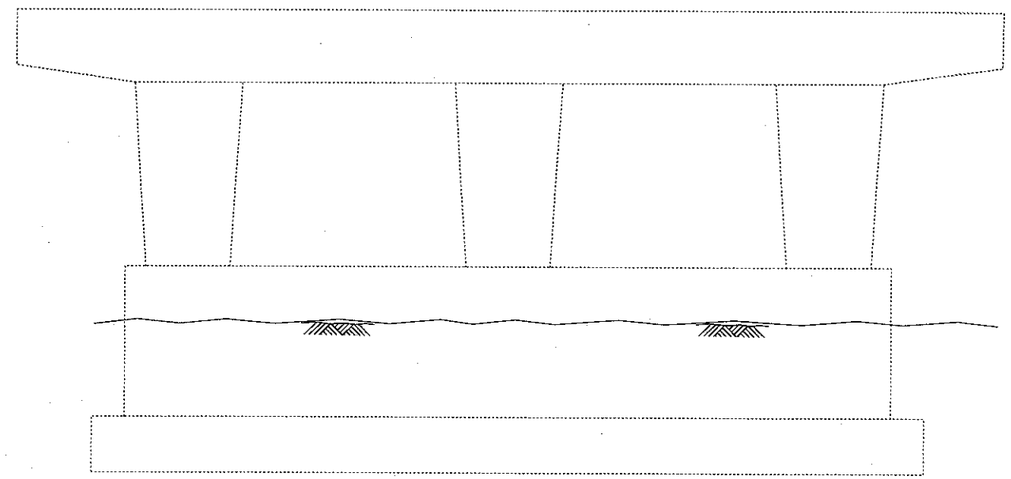

LOOKING NORTH

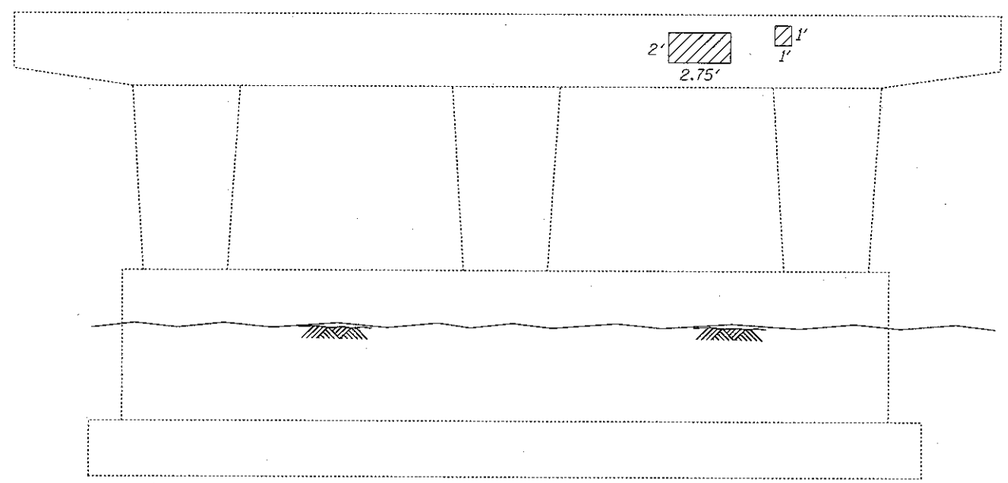

LOOKING SOUTH

Item	Unit	Total
Structural Repair of Concrete (Depth ≤ 5")	Sq. Ft.	6.5

Structural Repair of Concrete (Depth ≤ 5")

DESIGNED ATH	EXAMINED	ENGINEER OF STRUCTURAL SERVICES	DATE JANUARY 17, 2018
CHECKED MLD			
DRAWN baliva	PASSED	ENGINEER OF BRIDGES AND STRUCTURES	REVISED
CHECKED ATH MLD			REVISED

STATE OF ILLINOIS
DEPARTMENT OF TRANSPORTATION

SUBSTRUCTURE REPAIR DETAILS
SN 048-0073

SHEET NO. 10 OF 17 SHEETS

F.A.P. RTE.	SECTION	COUNTY	TOTAL SHEETS	SHEET NO.
313	94(16, 17)RS, 48(17,18)RS	KNOX	118	82
		CONTRACT NO. 68339		
		ILLINOIS FED. AID PROJECT		

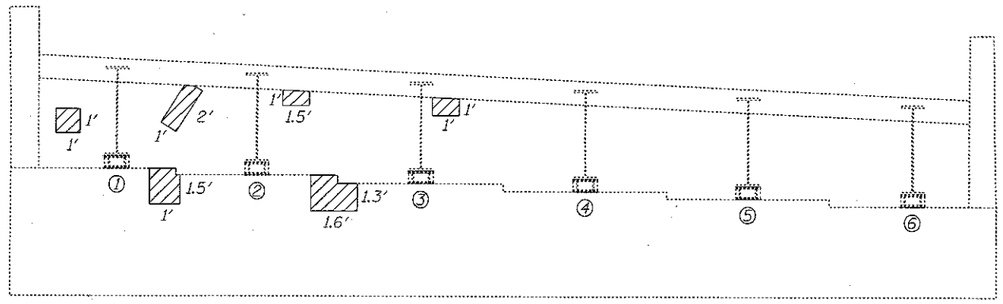

NORTH ABUTMENT
(Looking North)

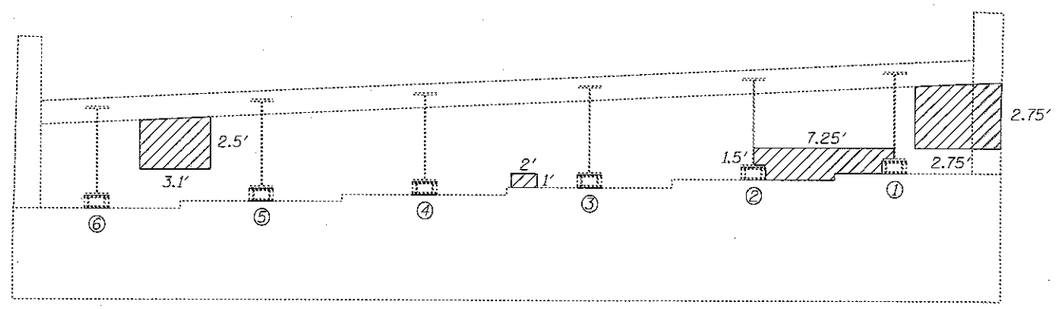

SOUTH ABUTMENT
(Looking South)

Item	Unit	Total
Structural Repair of Concrete (Depth ≤ 5")	Sq. Ft.	37.3

Structural Repair of Concrete (Depth ≤ 5")

DESIGNED ATH	EXAMINED	ENGINEER OF STRUCTURAL SERVICES	DATE JANUARY 17, 2018
CHECKED MLD	PASSED	ENGINEER OF BRIDGES AND STRUCTURES	REVISED
DRAWN baliva			REVISED
CHECKED ATH MLD			

STATE OF ILLINOIS
DEPARTMENT OF TRANSPORTATION

SUBSTRUCTURE REPAIR DETAILS
SN 048-0074

SHEET NO. 11 OF 17 SHEETS

F.A.P. RTE.	SECTION	COUNTY	TOTAL SHEETS	SHEET NO.
313	94(16, 17)RS, 48(17,18)RS	KNOX	118	83

CONTRACT NO. 68339

ILLINOIS FED. AID PROJECT

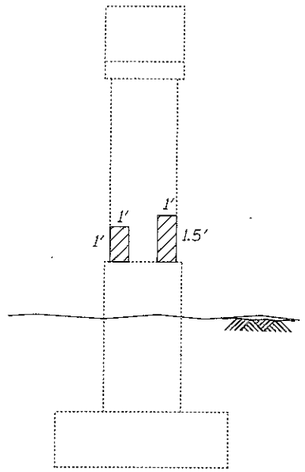

LOOKING WEST

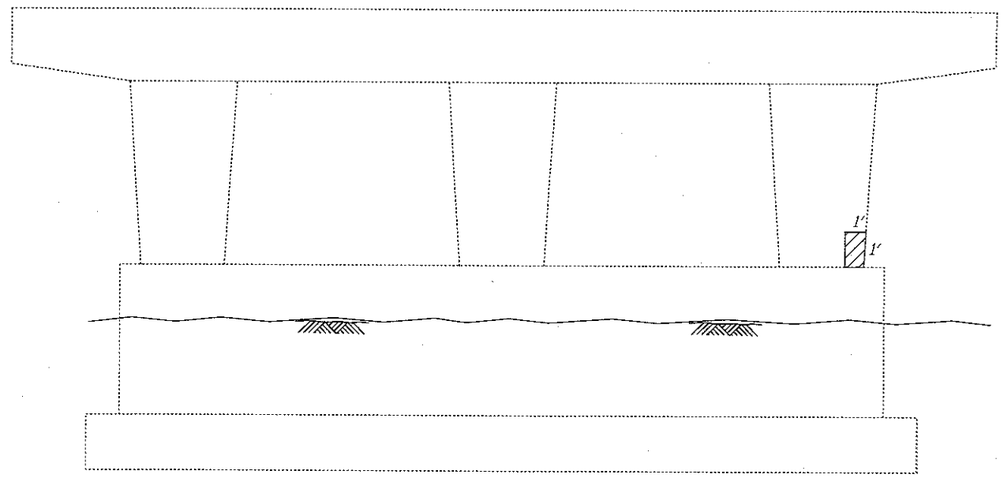

LOOKING NORTH

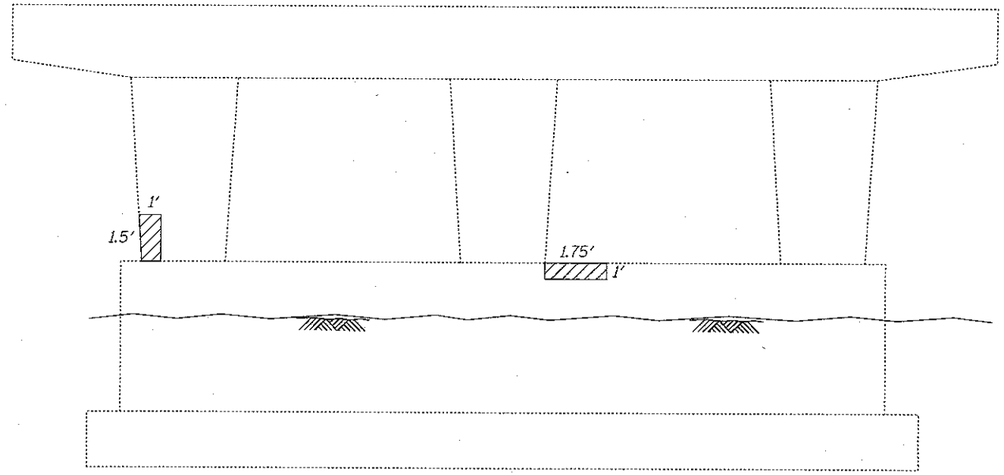

LOOKING SOUTH

Item	Unit	Total
Structural Repair of Concrete (Depth ≤ 5")	Sq. Ft.	4.3

Structural Repair of Concrete (Depth ≤ 5")

DESIGNED ATH	EXAMINED	ENGINEER OF STRUCTURAL SERVICES	DATE JANUARY 17, 2018
CHECKED MLD			
DRAWN baliva	PASSED	ENGINEER OF BRIDGES AND STRUCTURES	REVISED
CHECKED ATH MLD			REVISED

STATE OF ILLINOIS
DEPARTMENT OF TRANSPORTATION

SUBSTRUCTURE REPAIR DETAILS
SN 048-0074

SHEET NO. 12 OF 17 SHEETS

F.A.P. RTE.	SECTION	COUNTY	TOTAL SHEETS	SHEET NO.
313	94(16, 17)RS, 48(17,18)RS	KNOX	118	84

CONTRACT NO. 68339

ILLINOIS FED. AID PROJECT

NOTES

The cost of epoxy grouting threaded rods shall be included with Reinforcement Bars, Epoxy Coated.

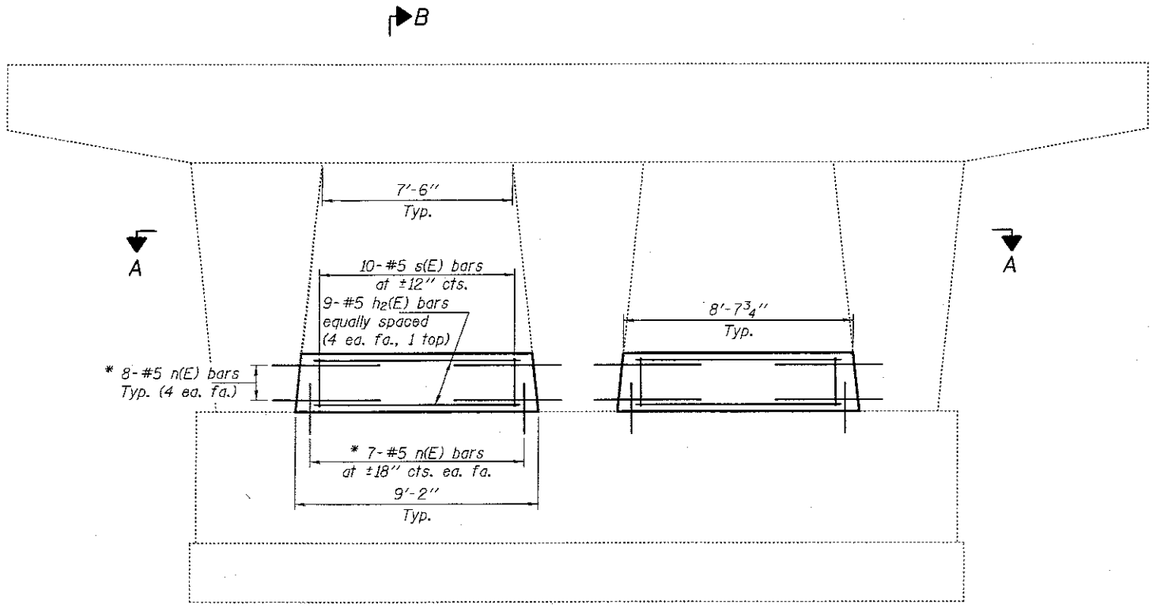

ELEVATION

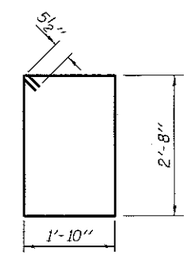

BAR s(E)

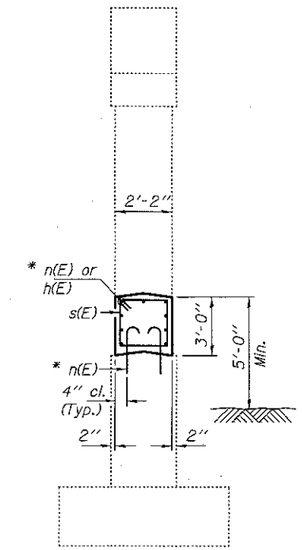

SECTION B-B

* Epoxy grout n(E) bars in 9" min. holes according to Article 584 of the Standard Specifications.

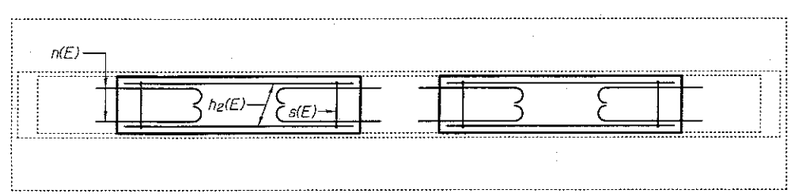

SECTION A-A

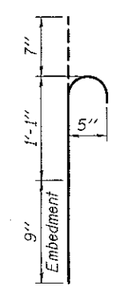

BAR n(E)

BILL OF MATERIAL

Bar	No.	Size	Length	Shape
h2(E)	18	#5	8'-4"	
n(E)	60	#5	2'-5"	
s(E)	20	#5	9'-11"	
Concrete Structures			Cu. Yd.	4.3
Reinforcement Bars, Epoxy Coated			Pound	510

DESIGNED ATH	EXAMINED	DATE JANUARY 17, 2018	STATE OF ILLINOIS DEPARTMENT OF TRANSPORTATION
CHECKED MLD	ENGINEER OF STRUCTURAL SERVICES		
DRAWN baliva	PASSED	REVISED	
CHECKED ATH MLD	ENGINEER OF BRIDGES AND STRUCTURES	REVISED	

CRASHWALL EXTENSION
SN 048-0074

SHEET NO. 13 OF 17 SHEETS

F.A.P. RTE.	SECTION	COUNTY	TOTAL SHEETS	SHEET NO.
313	94(15, 17)RS, 48(17,18)RS	KNOX	118	85
		CONTRACT NO. 68339		
	ILLINOIS	FED. AID PROJECT		

NOTES

The cost of epoxy grouting threaded rods shall be included with Reinforcement Bars, Epoxy Coated.

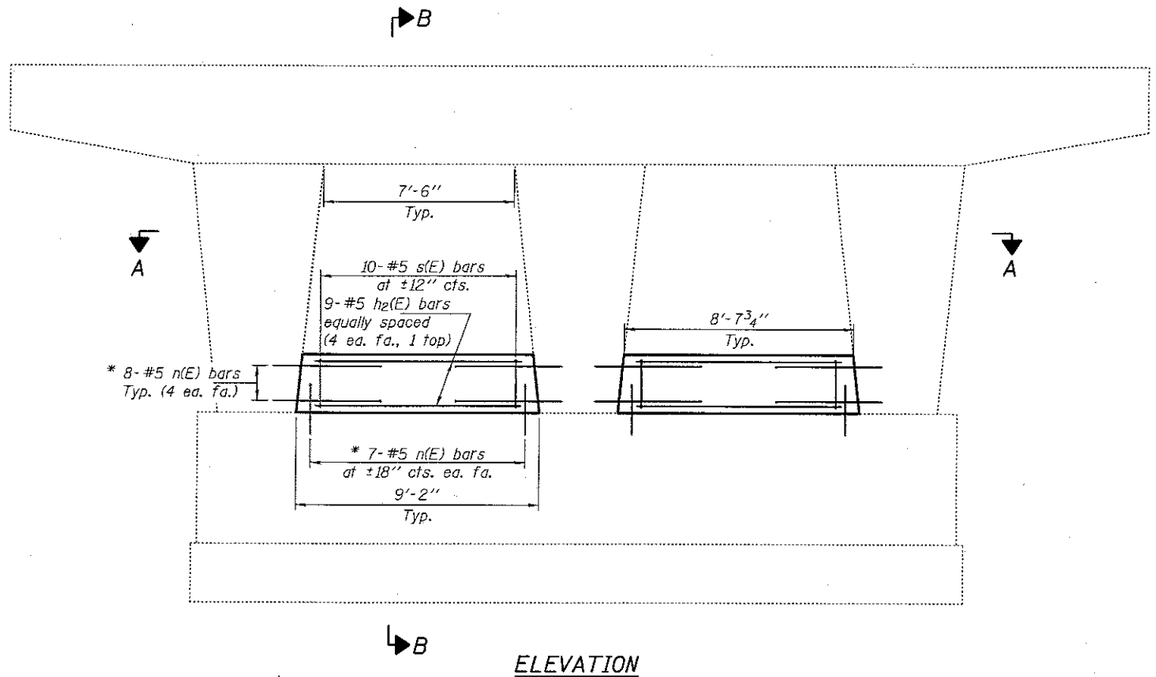

ELEVATION

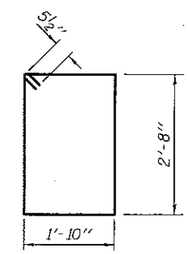

BAR s(E)

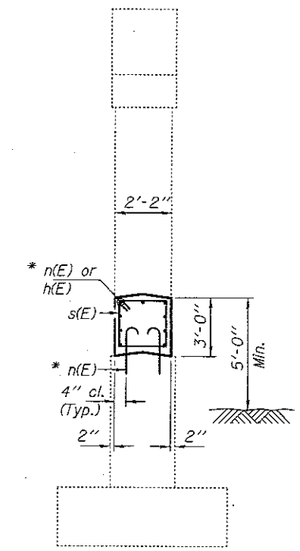

SECTION B-B

* Epoxy grout n(E) bars in 9" min. holes according to Article 584 of the Standard Specifications.

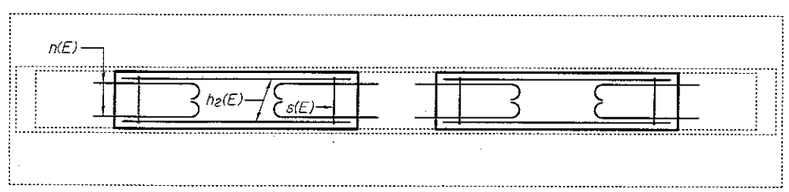

SECTION A-A

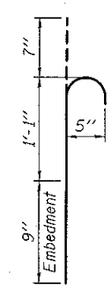

BAR n(E)

BILL OF MATERIAL

Bar	No.	Size	Length	Shape
h2(E)	18	#5	8'-4"	
n(E)	60	#5	2'-5"	
s(E)	20	#5	9'-11"	
Concrete Structures			Cu. Yd.	4.3
Reinforcement Bars, Epoxy Coated			Pound	510

DESIGNED ATH	EXAMINED Timothy A. Ahlgrim ENGINEER OF STRUCTURAL SERVICES	DATE JANUARY 17, 2018	STATE OF ILLINOIS DEPARTMENT OF TRANSPORTATION
CHECKED MLD			
DRAWN ballva	PASSED D. Carl Livingston ENGINEER OF BRIDGES AND STRUCTURES	REVISED	
CHECKED ATH MLD		REVISED	

CRASHWALL EXTENSION
SN 048-0073

SHEET NO. 14 OF 17 SHEETS

F.A.P. RTE.	SECTION	COUNTY	TOTAL SHEETS	SHEET NO.
313	94(16, 17)RS, 48(17,18)RS	KNOX	118	86

CONTRACT NO. 68339

ILLINOIS FED. AID PROJECT

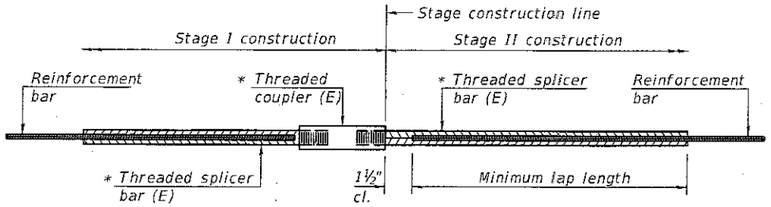

STANDARD BAR SPLICER ASSEMBLY

Threaded splicer bar length = min. lap length + 1½" + thread length

* Epoxy not required on Bar Splicer Assembly components used in conjunction with black bars.

Location	Bar size	No. assemblies required	Minimum lap length

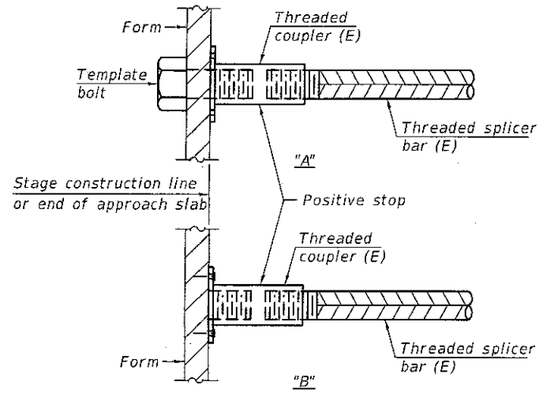

INSTALLATION AND SETTING METHODS

"A" : Set bar splicer assembly by means of a template bolt.
"B" : Set bar splicer assembly by nailing to wood forms or cementing to steel forms.
(E) : Indicates epoxy coating.

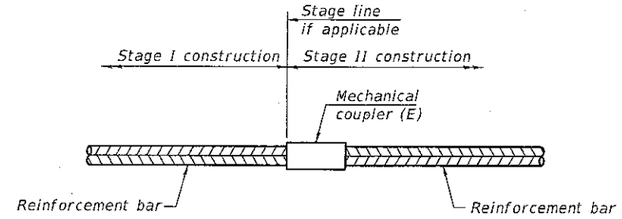

STANDARD MECHANICAL SPLICER

Location	Bar size	No. assemblies required
SN 048-0073 S. Abut. Backwall	#5	10

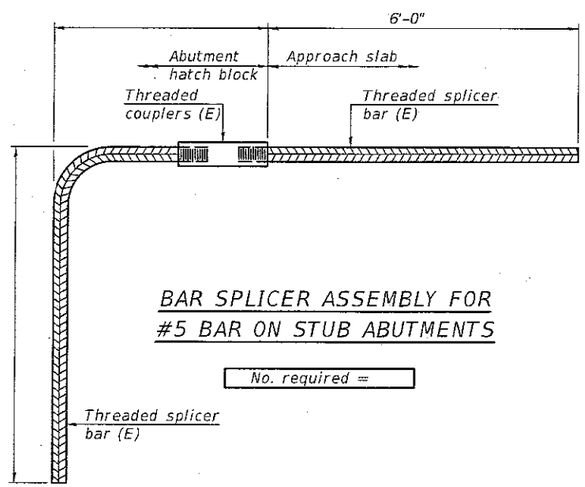

BAR SPLICER ASSEMBLY FOR #5 BAR ON STUB ABUTMENTS

No. required =

NOTES

Splicer bars shall be deformed with threaded ends and have a minimum 60 ksi yield strength.

All reinforcement shall be lapped and tied to the splicer bars.

Bar splicer assemblies shall be epoxy coated according to the requirements for reinforcement bars. See Section 508 of the Standard Specifications.

See approved list of bar splicer assemblies and mechanical splicers for alternatives.

BSD-1 2-17-2017

DESIGNED ATH	EXAMINED	ENGINEER OF STRUCTURAL SERVICES	DATE JANUARY 17, 2018	STATE OF ILLINOIS DEPARTMENT OF TRANSPORTATION	BAR SPLICER ASSEMBLY AND MECHANICAL SPLICER DETAILS SN 048-0073 & 0074
CHECKED MLD					
DRAWN balva	PASSED	ENGINEER OF BRIDGES AND STRUCTURES	REVISED		SHEET NO. 15 OF 17 SHEETS
CHECKED ATH MLD			REVISED		

F.A.P. RTE.	SECTION	COUNTY	TOTAL SHEETS	SHEET NO.
313	94(16, 17)RS, 48(17,18)RS	KNOX	118	87
		CONTRACT NO. 68339		
		ILLINOIS FED. AID PROJECT		

STATE OF ILLINOIS
DEPARTMENT OF TRANSPORTATION

ROUTE NO.	SECTION	COUNTY	TOTAL SHEETS	SHEET NO.
F.A.P. 404	48-18 HB-1	KNOX	31	18
FED. ROAD DIST. NO. 7		ILLINOIS	FED. AID PROJECT	

SHEET NO. 11
19 SHEETS

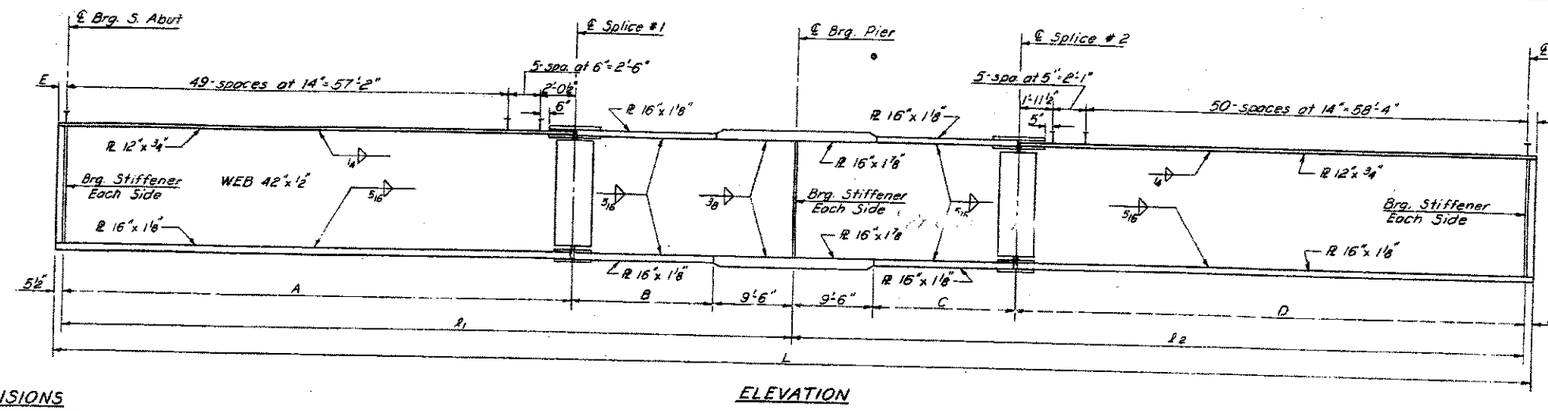

ELEVATION

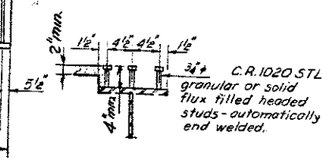

SHEAR CONNECTORS
333 Req'd Ea. Girder

BEAM DIMENSIONS

		Radii	R_1	R_2	L	A	B	C	D	E	F
South Bd Lanes	Beam 1	2928.915	88°-2"	88°-8 7/16"	177°-9 7/16"	61'-8 9/16"	16'-11 7/16"	17'-0"	62'-2 7/16"	5 9/16"	3 7/16"
	Beam 2	2921.665	88°-2 1/8"	88°-8 9/16"	177°-9 11/16"	61'-8 5/8"	16'-11 1/2"	17'-0 1/16"	62'-2 2"	5 5/8"	3 1/2"
	Beam 3	2914.415	88°-2 3/16"	88°-8 11/16"	177°-9 7/8"	61'-8 11/16"	16'-11 1/2"	17'-0 1/16"	62'-2 3/8"	5 11/16"	3 5/8"
	Beam 4	2907.165	88°-2 1/4"	88°-8 13/16"	177°-10 1/16"	61'-8 3/4"	16'-11 1/2"	17'-0 1/8"	62'-2 9/16"	5 3/4"	3 9/16"
	Beam 5	2899.915	88°-2 3/8"	88°-8 15/16"	177°-10 5/16"	61'-8 13/16"	16'-11 3/16"	17'-0 1/8"	62'-2 13/16"	5 13/16"	3 13/16"
	Beam 6	2892.665	88°-2 7/16"	88°-9 1/16"	177°-10 1/2"	61'-8 7/8"	16'-11 3/16"	17'-0 3/16"	62'-2 7/8"	5 7/8"	3 7/8"
North Bd Lanes	Beam 1	2836.915	88°-3 3/16"	88°-10 1/16"	178°-0 1/4"	61'-9 3/8"	16'-11 5/16"	17'-0 1/16"	62'-3 3/8"	6 3/8"	4 3/8"
	Beam 2	2829.665	88°-3 5/16"	88°-10 3/16"	178°-0 1/2"	61'-9 1/16"	16'-11 7/8"	17'-0 1/2"	62'-3 11/16"	6 1/16"	4 11/16"
	Beam 3	2822.415	88°-3 3/8"	88°-10 3/8"	178°-0 3/4"	61'-9 1/2"	16'-11 7/8"	17'-0 1/2"	62'-3 13/16"	6 1/2"	4 5/8"
	Beam 4	2815.165	88°-3 1/2"	88°-10 1/2"	178°-1"	61'-9 9/16"	16'-11 15/16"	17'-0 3/16"	62'-3 15/16"	6 9/16"	4 15/16"
	Beam 5	2807.915	88°-3 5/8"	88°-10 5/8"	178°-1 1/4"	61'-9 5/8"	17'-0"	17'-0 3/16"	62'-4 1/16"	6 5/8"	5 1/16"
	Beam 6	2800.665	88°-3 11/16"	88°-10 13/16"	178°-1 1/2"	61'-9 11/16"	17'-0"	17'-0 5/8"	62'-4 3/16"	6 11/16"	5 3/16"

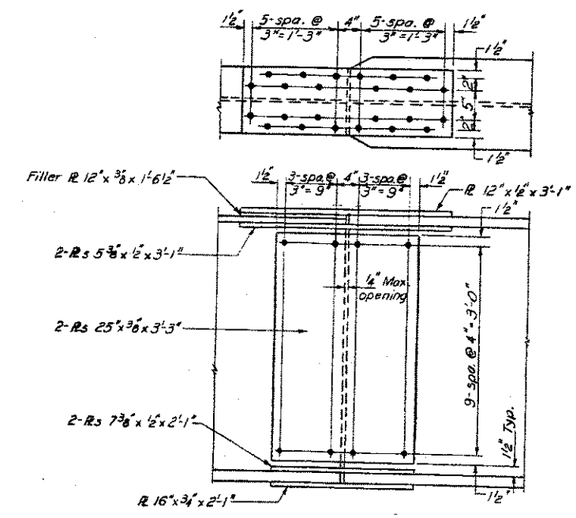

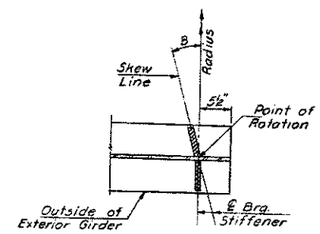

LOCATION DETAIL END BEARING STIFFENER

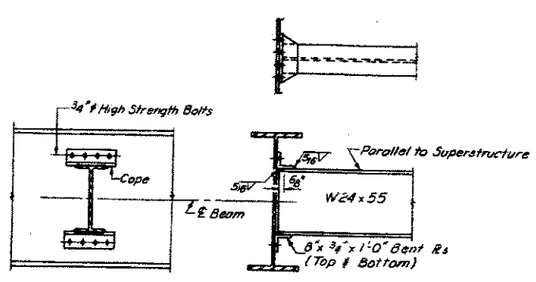

DIAPHRAGM D_1
No. Req'd. 80

ANGLE "B"

	S. Abut.	Pier	N. Abut
South Bound Lanes			
Beam 1	9°-36'-04"	11°-19'-33"	13°-03'-40"
Beam 2	9°-37'-30"	11°-21'-15"	13°-05'-38"
Beam 3	9°-38'-57"	11°-22'-58"	13°-07'-38"
Beam 4	9°-40'-25"	11°-24'-42"	13°-09'-38"
Beam 5	9°-41'-53"	11°-26'-26"	13°-11'-38"
Beam 6	9°-43'-21"	11°-28'-11"	13°-13'-39"
North Bound Lanes			
Beam 1	9°-54'-56"	11°-41'-53"	13°-29'-33"
Beam 2	9°-56'-28"	11°-43'-43"	13°-31'-40"
Beam 3	9°-58'-01"	11°-45'-33"	13°-33'-47"
Beam 4	9°-59'-34"	11°-47'-23"	13°-35'-55"
Beam 5	10°-01'-08"	11°-49'-15"	13°-38'-04"
Beam 6	10°-02'-43"	11°-51'-06"	13°-40'-14"

Notes:
All Beams shall be fabricated according to their respective radii.
All longitudinal dimensions are given along ℄ Girder.
All D_1 Diaphragms are radial.

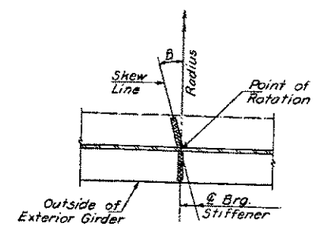

LOCATION DETAIL BEARING STIFFENER PIER

TOP OF WEB ELEVATIONS

		℄ Brg. S. Abut.	℄ Splice #1	℄ Pier	℄ Splice #2	℄ Brg. N. Abut.
South Bd Lanes	Bm. 1	786.32	786.65	786.91	787.17	787.51
	Bm. 2	785.89	786.22	786.48	786.74	787.14
	Bm. 3	785.47	785.80	786.06	786.32	786.78
	Bm. 4	785.04	785.37	785.63	785.89	786.29
	Bm. 5	784.62	784.95	785.21	785.47	785.81
	Bm. 6	784.20	784.52	784.78	785.04	785.44
North Bd Lanes	Bm. 1	786.[illegible]	786.55	786.80	787.05	787.4[illegible]
	Bm. 2	785.[illegible]9	786.11	786.37	786.63	787.0[illegible]
	Bm. 3	785.53	785.70	785.95	786.[illegible]0	786.[illegible]
	Bm. 4	784.94	785.26	785.52	785.78	786.[illegible]
	Bm. 5	784.52	784.8[illegible]	785.10	785.36	78[illegible]
	Bm. 6	784.09	784.41	784.67	784.93	78[illegible]

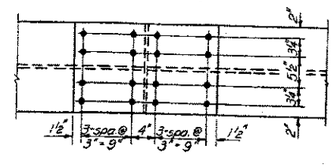

SPLICE
7/8" H.S. Bolts

NOTES:
- The main load carrying member components subject to the Supplemental Requirements for Notch Toughness are the flanges, webs and splice plates of the steel girders or wide flange beams.

Bearing Seat surfaces shall be constructed or adjusted to the designated elevations within a tolerance of ± 1/8 inch. Adjustment shall be made either by grinding the surface or by shimming the bearing. Two 1/8" adjusting shims, of the dimensions of the bottom bearing plate, shall be provided for each bearing in addition to all other plates or shims.

FOR INFORMATION ONLY

STRUCTURAL STEEL
NORTH & SOUTH BOUND LANES
F.A. RT. 404 SEC. 48-18HB-1
KNOX COUNTY
STATION 350+94.38

DESIGNED	George AL-Bazi
CHECKED	A.W. Carter
DRAWN	R. P. Summer
CHECKED	A.W. Carter

EXAMINED Oct. 22, 1984
PASSED
APPROVED
DIRECTOR OF HIGHWAYS

DESIGNED ATH	EXAMINED Timothy A. Bond	DATE JANUARY 17, 2018	
CHECKED MLD	ENGINEER OF STRUCTURAL SERVICES		
DRAWN baliva	PASSED A. Carl Rumy	REVISED	
CHECKED ATH MLD	ENGINEER OF BRIDGES AND STRUCTURES	REVISED	

STATE OF ILLINOIS
DEPARTMENT OF TRANSPORTATION

STEEL DETAILS
SN 048-0073 & 0074
SHEET NO. 16 OF 17 SHEETS

F.A.P. RTE.	SECTION	COUNTY	TOTAL SHEETS	SHEET NO.
313	94(16, 17)RS, 48(17,18)RS	KNOX	118	88

CONTRACT NO. 68339
ILLINOIS FED. AID PROJECT

STATE OF ILLINOIS
DEPARTMENT OF TRANSPORTATION

ROUTE NO.	SECTION	COUNTY	TOTAL SHEETS	SHEET NO.
F.A.P. 404	48-18 HB-1	KNOX	31	19

SHEET NO. 12 OF 19 SHEETS

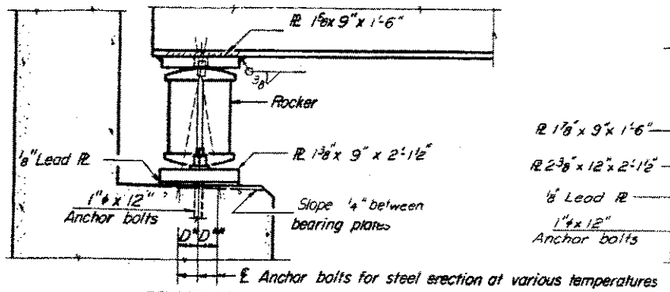

SECTION

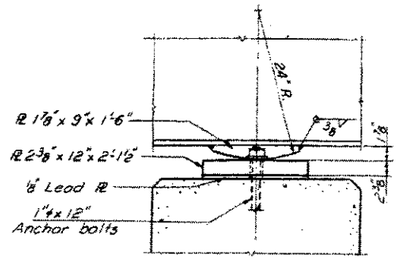

ELEVATION

MOMENT TABLE - Symmetrical Composite 2 Span
(Composite in Positive Moment Areas Only)

INTERIOR GIRDER MOMENT TABLE		0.4 Sp. 1	Pier
I_s	(in⁴)	14772	31,980
I_c	(in⁴)	40,418	
S_s	(in³)	819	1398
S_c	(in³)	1132	
℄	(k)/1	.922	1.057
M_{DL}	(i.k)	442	1511
$f_{s\,DL}$	(ksi)	6.5	13.0
S℄	(k/1)	.462	
$M_{S\,DL}$	(i.k)	269	
M_{LL}	(i.k)	718	554
M_{Imp}	(i.k)	169	129
TOTAL	(i.k)	1156	583
$f_{s\,LL+S\,DL}$	(ksi)	12.3	5.9
$f_{s\,TOTAL}$	(ksi)	18.8	18.9
VR	(k)	56.02	

REACTION TABLE -

INTERIOR GIRDER REACTION TABLE		Abut.	Pier
R℄	(k)	29.16	108.47
$R_{LL+S\,DL}$	(k)	57.22	113.04
Imp	(k)	9.71	14.73
R_{TOTAL}	(k)	96.09	236.24

I_s and S_s are the moment of inertia and section modulus of the steel section.
I_c and S_c are the moment of inertia and section modulus of the composite section used in computing fs.
VR is the maximum ℄ + Impact shear range in span.

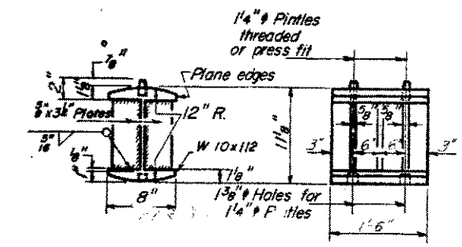

ROCKER

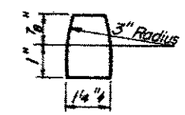

PINTLE

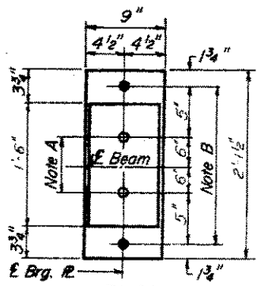

PLAN

AT ABUTMENT

NOTE A
1⅜" ϕ Holes - 1" deep in top PL for pintles. Thread or press fit pintles into bottom PL.

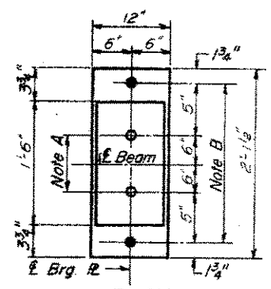

PLAN

AT PIER

NOTE B
1½" ϕ Holes for 1" ϕ anchor bolts. 18" x 2½" x 2½" PL. Washers under nut.

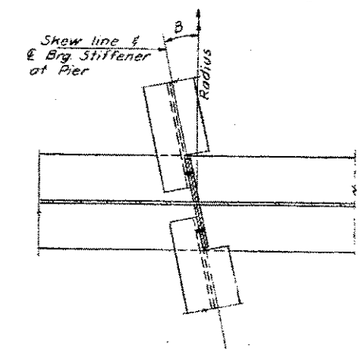

NOTES ON SETTING OF ANCHOR BOLTS AT EXP. BRGS.

a) D* (Side of brg. away from fixed brg.)
D* = ⅛" per each 100' of expansion for every 15° fall below the normal temp. of 50°F.
D** (Side of brg. toward fixed brg.)
D** = ⅛" per each 100' of expansion for every 15° rise above the normal temp. of 50°F.

b) After beams have been erected and dimensions D* or D** determined, holes shall be drilled and anchor bolts shall be grouted in place. All fixed anchor bolts may be built into the masonry.

BEARING ASSEMBLY DETAILS

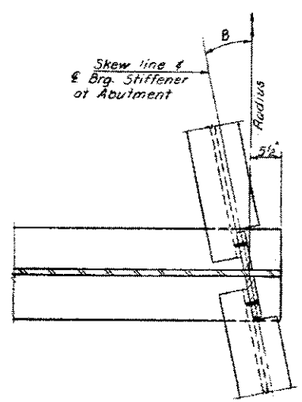

DIAPHRAGM D
No. Req'd 20

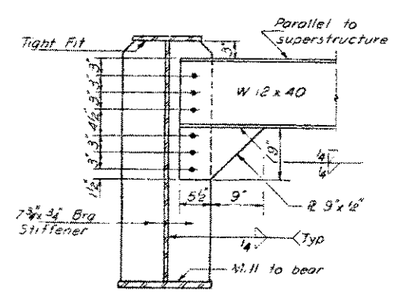

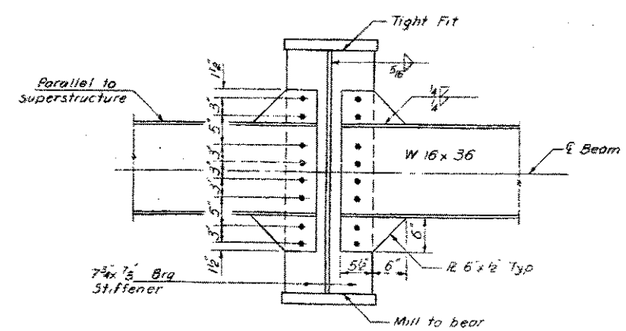

DIAPHRAGM D_2
No. Req'd. 10

Note:
Work this sheet with sheet # 11

FOR INFORMATION ONLY

BEARING DETAILS
NORTH & SOUTH BOUND LANES
F.A. RT. 404 SEC. 48-18HB-1
KNOX COUNTY
STATION 350+94.38

DESIGNED	George Al-Bazi
CHECKED	
DRAWN	P.G. Barnett
CHECKED	

EXAMINED Oct. 22, 1974
ENGINEER OF STRUCTURAL SERVICES
PASSED
ENGINEER OF BRIDGE AND TRAFFIC STRUCTURES
APPROVED
ENGINEER OF DESIGN
DIRECTOR OF HIGHWAYS

I-2-B 9-1-65, 8-1-70

DESIGNED ATH	EXAMINED Timothy A. Ahlgrim	DATE JANUARY 17, 2018	
CHECKED MLD	ENGINEER OF STRUCTURAL SERVICES		
DRAWN baliva	PASSED Carl Puzey	REVISED	
CHECKED ATH MLD	ENGINEER OF BRIDGES AND STRUCTURES	REVISED	

STATE OF ILLINOIS
DEPARTMENT OF TRANSPORTATION

STEEL DETAILS
SN 048-0073 & 0074
SHEET NO. 17 OF 17 SHEETS

F.A.P. RTE.	SECTION	COUNTY	TOTAL SHEETS	SHEET NO.
313	94(16, 17)RS, 48(17,18)RS	KNOX	118	89

CONTRACT NO. 68339
ILLINOIS FED. AID PROJECT

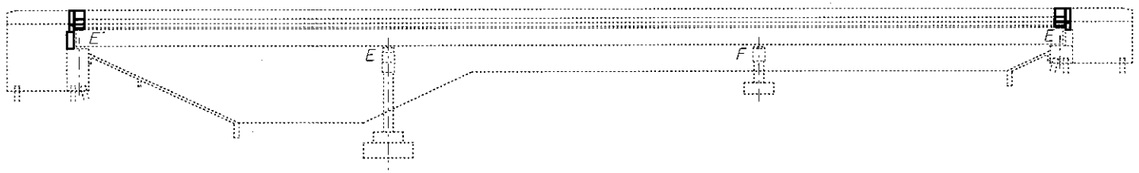

ELEVATION

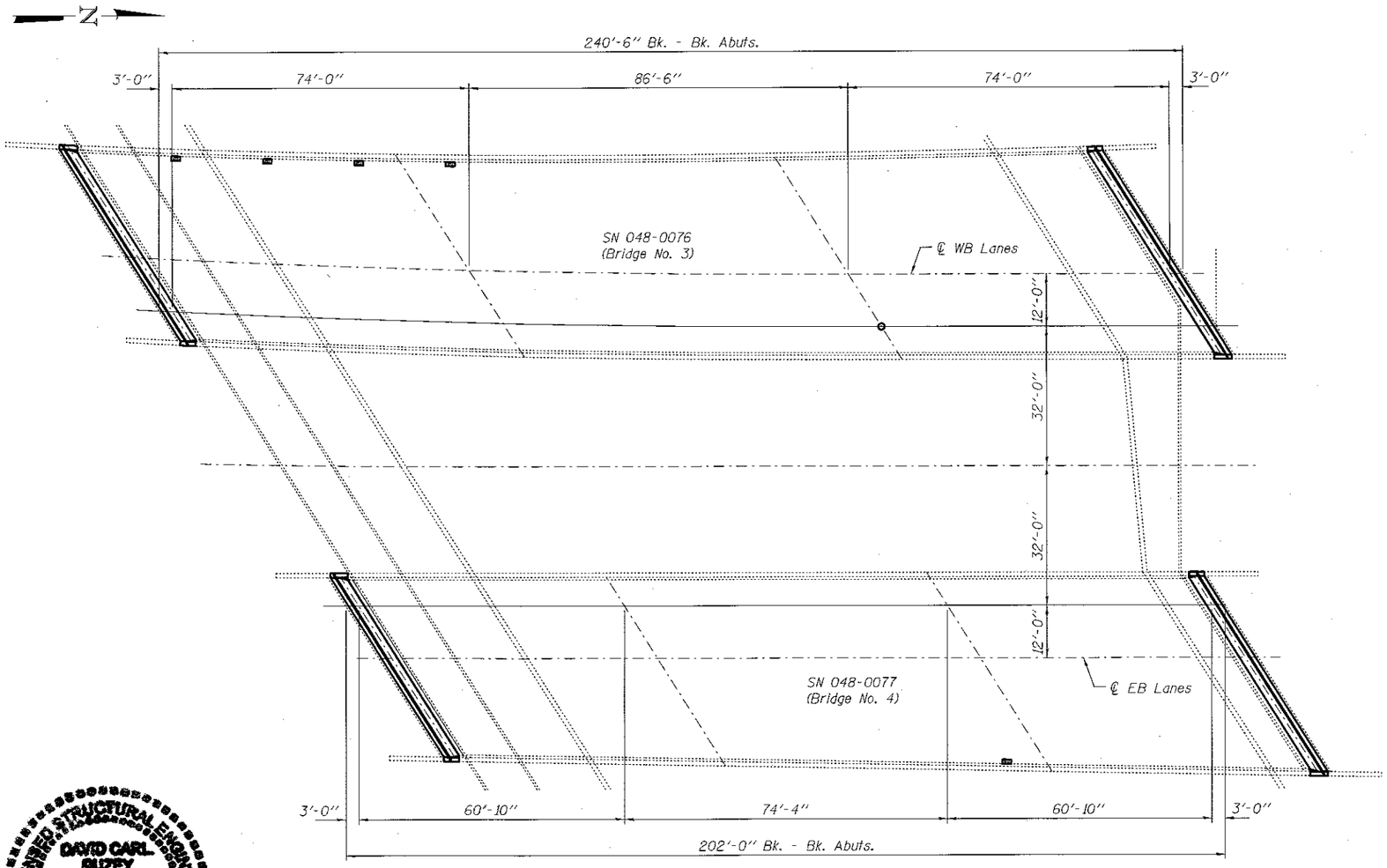

PLAN

GENERAL NOTES

All structural steel shall conform to AASHTO Classification M-270 Gr. 36, unless otherwise noted.

Reinforcement bars designated (E) shall be epoxy coated.

Prior to pouring the new concrete deck, all heavy or loose rust, loose mill scale, and other loose or potentially detrimental foreign material shall be removed from the surfaces in contact with concrete. Tightly adhered paint may remain unless otherwise noted. Removal shall be accomplished by methods that will not damage the steel and the cost will be included in the pay item covering removal of the existing concrete.

Plan dimensions and details relative to existing plans are subject to nominal construction variations. The Contractor shall field verify existing dimensions and details affecting new construction and make necessary approved adjustments prior to construction or ordering of materials. Such variations shall not be cause for additional compensation for a change in scope of the work, however, the Contractor will be paid for the quantity actually furnished at the unit price bid for the work.

Existing reinforcement bars extending into the removal area shall be cleaned, straightened and incorporated into the new construction. Any reinforcement bars that are damaged during concrete removal shall be replaced with an approved bar splicer or anchorage system. Cost included with Concrete Removal.

Joint openings shall be adjusted according to Article 520.04 of the Std. Specs. when the deck is poured at an ambient temperature other than 50° F.

Existing structural steel that will be in contact with new structural steel shall be cleaned and painted prior to erection as required by the special provision "Cleaning and Painting Contact Surface Areas of Existing Steel Structures".

Cleaning and painting of the existing structural steel shall be as specified in the special provision for "Cleaning and Painting Existing Steel Structures". Areas to be painted shall consist of all beam ends, end diaphragms, and steel components of bearings at the abutments. Beam end painting shall extend 5' from the ends of the beams longitudinally. Also included in the areas to be painted, the bottom beam flanges and 6" up the beam webs shall be painted out to 20' from the north ends of the beams at the north abutment. All areas to be painted shall be cleaned per near white blast cleaning per SSPC 10. All existing steel cleaned shall be painted according to the requirements of paint system 1 - OZ/E/U. The color of the final finish coat shall be green (Munsell 7.5G 4/8). The use of air monitors will be required.

A minimum of two air monitors will be required to monitor abrasive blasting operations.

The SSPC-QP1 and SSPC-QP2 painting contractor certifications will be required.

Care shall be taken not to damage rubber bearing or joint components during blasting and cleaning operations. Any damage to these components shall be repaired at the contractor's expense.

The existing structural steel coating contains lead. The Contractor shall take appropriate precautions to deal with the presence of lead on this project.

TOTAL BILL OF MATERIAL

	ITEM	UNIT	QUANTITY
	Concrete Removal	Cu. Yd.	29.4
	Concrete Structures	Cu. Yd.	1.6
	Concrete Superstructure	Cu. Yd.	28.4
	Preformed Joint Strip Seal	Foot	215
	Reinforcement Bars, Epoxy Coated	Pound	3110
*	Protective Coat	Sq. Yd.	82.4
	Floor Drains	Each	5
	Structural Repair of Concrete (Depth ≤ 5")	Sq. Ft.	42.5
	Structural Repair of Concrete (Depth > 5")	Sq. Ft.	15.3
	Elastomeric Bearing Assembly, Type I	Each	21
	Elastomeric Bearing Assembly, Type II	Each	7
	Jack and Remove Existing Bearings	Each	28
	Anchor Bolts 1"Φ	Each	60
	Containment and Disposal of Lead Paint Cleaning Residues Bridge No. 3	L. Sum	1
	Containment and Disposal of Lead Paint Cleaning Residues Bridge No. 4	L. Sum	1
	Cleaning and Painting Steel Bridge No. 3	L. Sum	1
	Cleaning and Painting Steel Bridge No. 4	L. Sum	1
	Deck Slab Repair (Full Depth, Type I)	Sq. Yd.	1.1

* On new concrete

LICENSED STRUCTURAL ENGINEER
DAVID CARL PUZEY
081-005470
SPRINGFIELD ILLINOIS
STATE OF ILLINOIS

EXPIRES 11-30-2018

DESIGNED		EXAMINED		DATE JANUARY 17, 2018	STATE OF ILLINOIS DEPARTMENT OF TRANSPORTATION	PLAN AND ELEVATION F.A. RTE. 404 (US 34) OVER CEDAR CREEK SN 048-0076 (WB) & 0077 (EB)	F.A.P. RTE. 313	SECTION 94(16, 17)RS, 48(17,18)RS
CHECKED			ACTING ENGINEER OF STRUCTURAL SERVICES					
DRAWN	daburdell	PASSED		REVISED		SHEET NO. 1 OF 18 SHEETS	COUNTY KNOX	TOTAL SHEETS 118 / SHEET NO. 90
CHECKED	JSB / SMR		ENGINEER OF BRIDGES AND STRUCTURES	REVISED			CONTRACT NO. 68339	
							ILLINOIS FED. AID PROJECT	

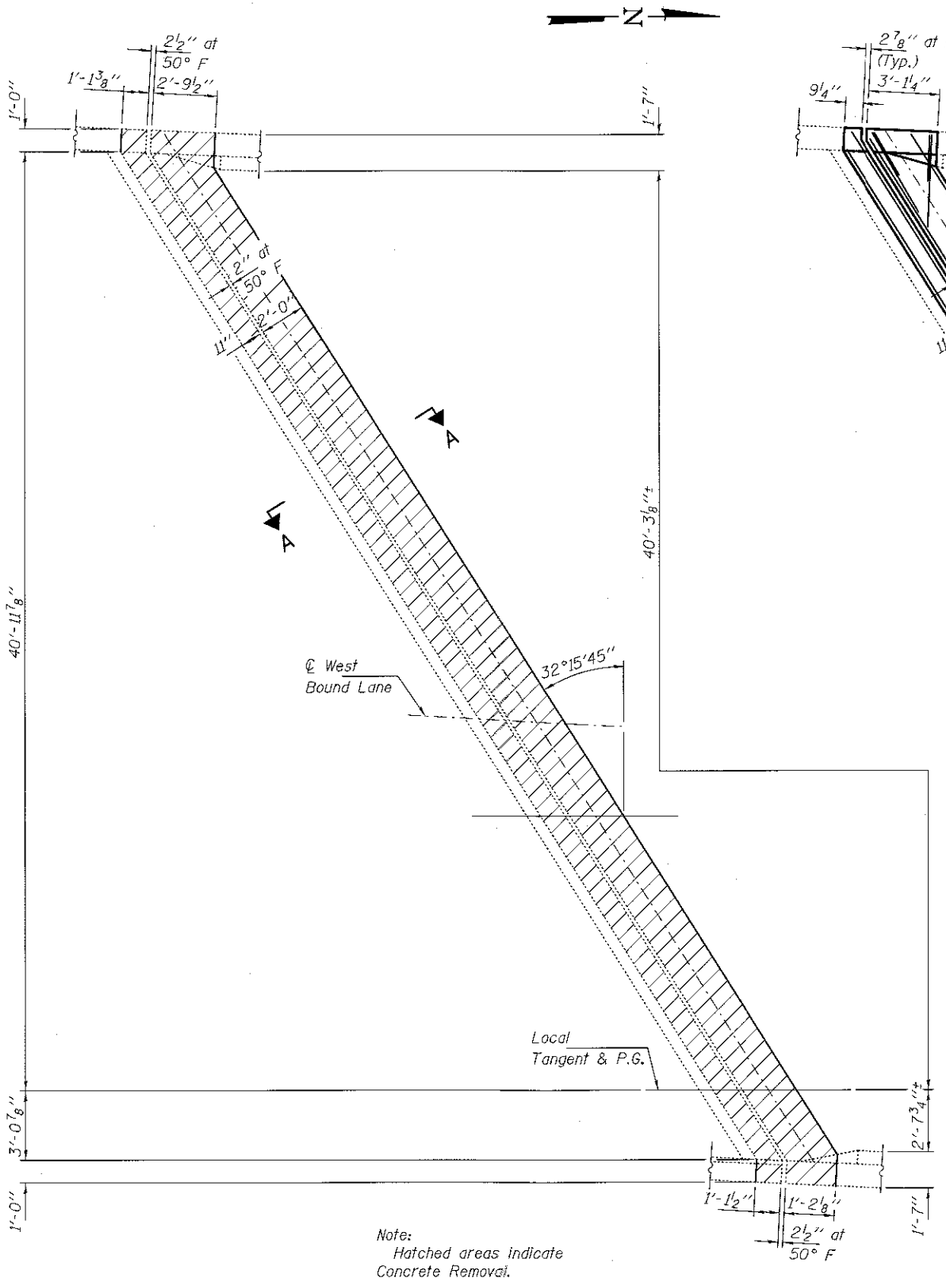

CONCRETE REMOVAL

South Abutment

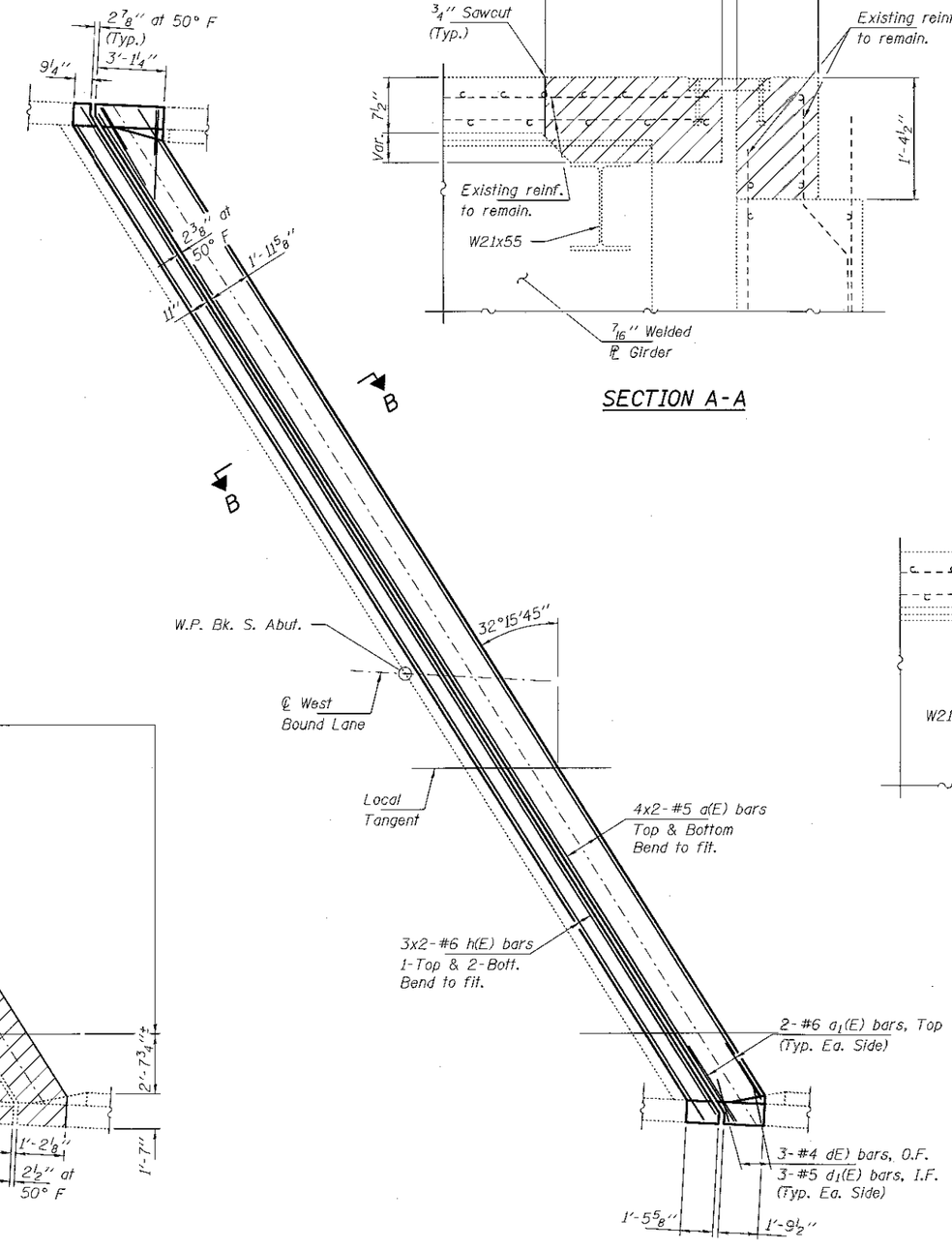

CONCRETE PLACEMENT

South Abutment

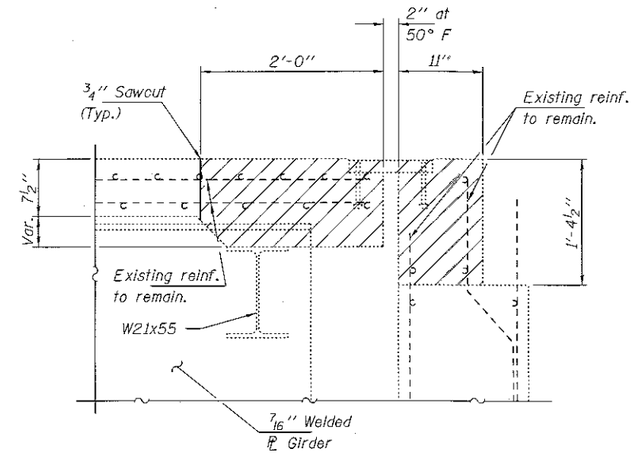

SECTION A-A

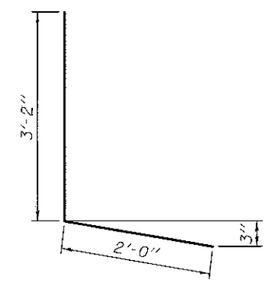

BAR d(E)

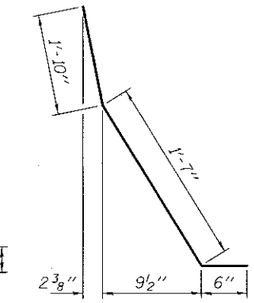

BAR d1(E)

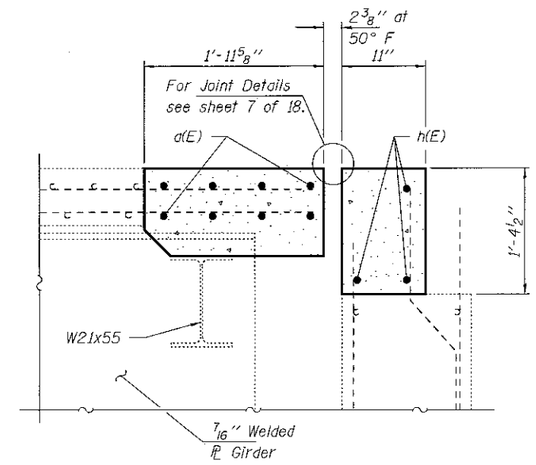

SECTION B-B

MINIMUM BAR LAP

#5 bar = 3'-6"

BILL OF MATERIAL - S. ABUT.

Bar	No.	Size	Length	Shape
d(E)	16	#5	28'-7"	——
a1(E)	4	#6	4'-0"	——
d(E)	6	#4	5'-2"	L
d1(E)	6	#5	3'-11"	⌊
h(E)	6	#5	28'-7"	——
Concrete Removal			Cu. Yd.	6.9
Concrete Superstructure			Cu. Yd.	6.9
Reinforcement Bars, Epoxy Coated			Pound	730

Bars indicated thus 4x2-#5 etc. indicates 4 line of bars with 2 lengths per line.

DESIGNED JSB	EXAMINED	ACTING ENGINEER OF STRUCTURAL SERVICES	DATE JANUARY 17, 2018
CHECKED SMR	PASSED	ENGINEER OF BRIDGES AND STRUCTURES	REVISED
DRAWN daburdell			REVISED
CHECKED JSB / SMR			

STATE OF ILLINOIS
DEPARTMENT OF TRANSPORTATION

JOINT REMOVAL AND REPLACEMENT
SN 048-0076 (WB)

SHEET NO. 2 OF 18 SHEETS

F.A.P. RTE.	SECTION	COUNTY	TOTAL SHEETS	SHEET NO.
313	94(16, 17)RS, 48(17,18)RS	KNOX	118	91

CONTRACT NO. 68339

ILLINOIS FED. AID PROJECT

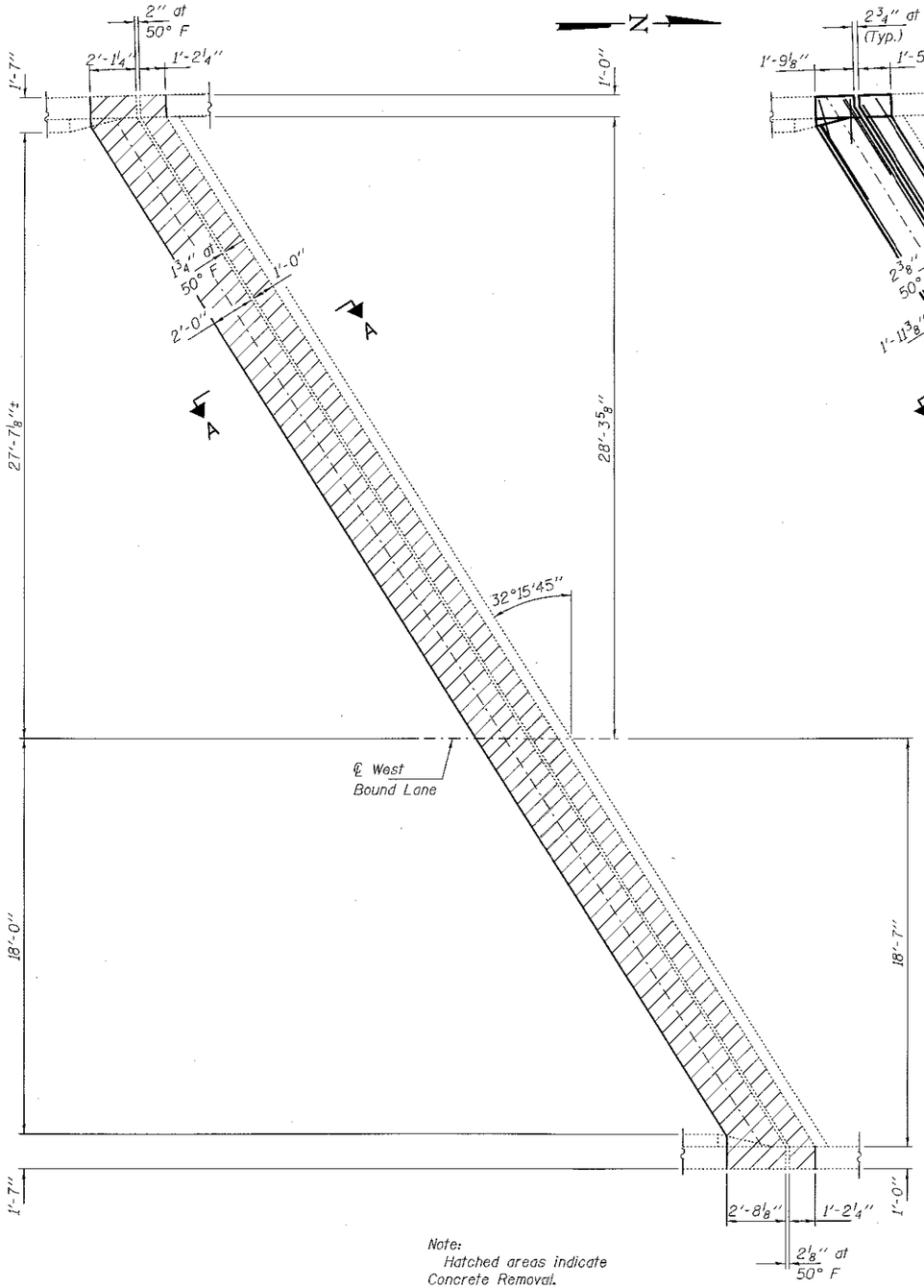

Note:
Hatched areas indicate Concrete Removal.

CONCRETE REMOVAL
North Abutment

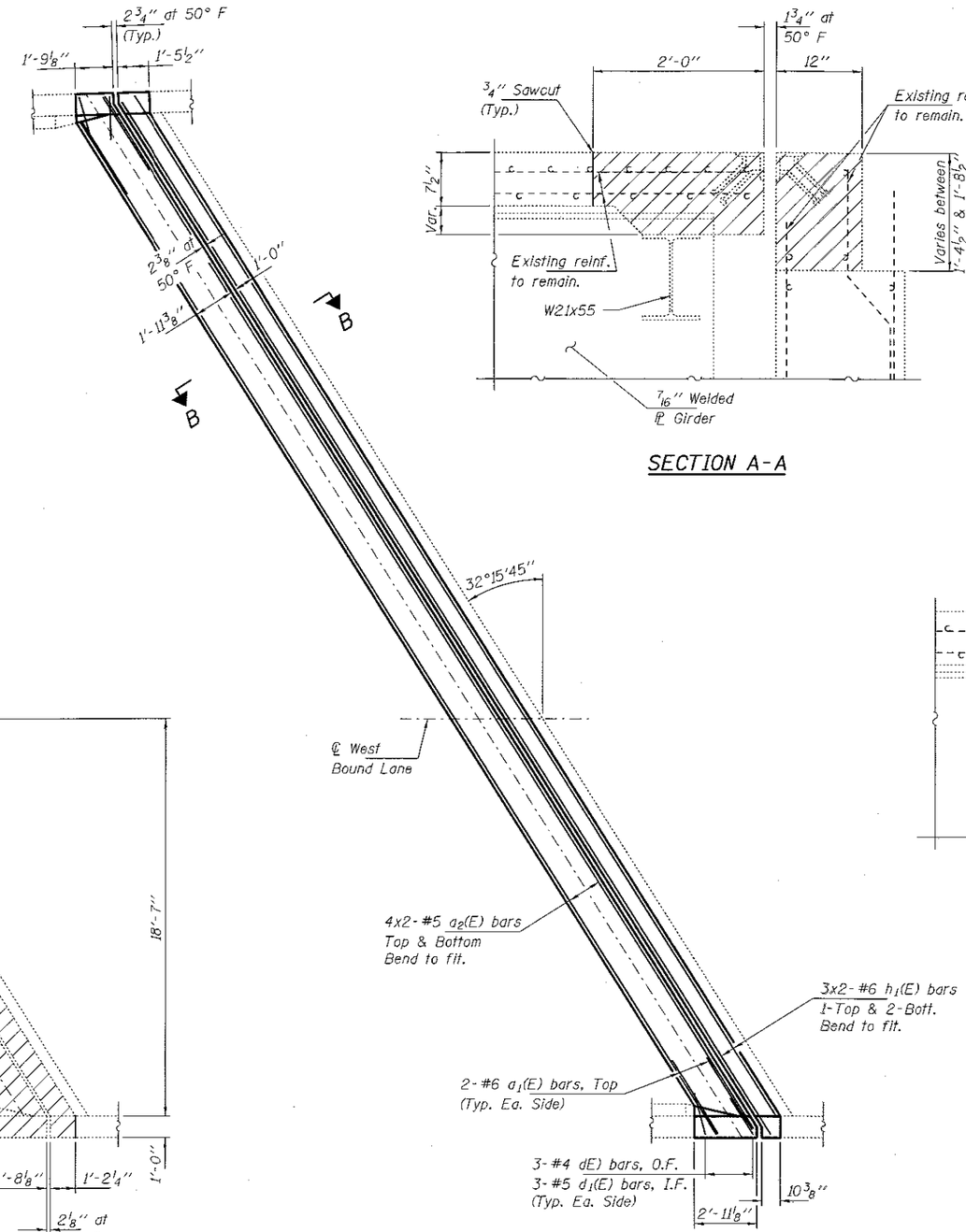

CONCRETE PLACEMENT
North Abutment

SECTION A-A

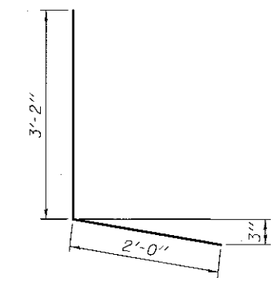

BAR d(E)

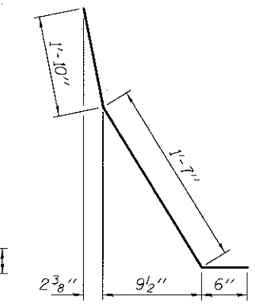

BAR d1(E)

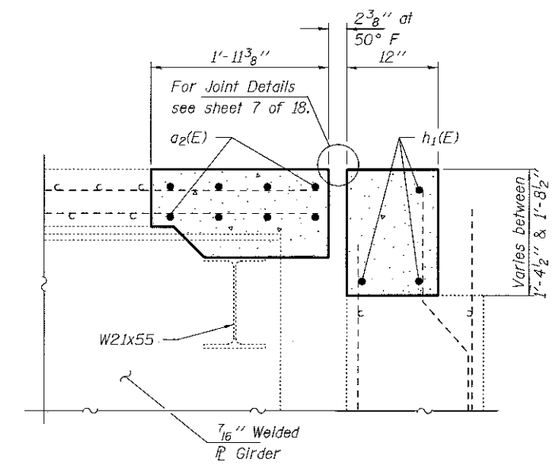

SECTION B-B

MINIMUM BAR LAP
#5 bar = 3'-6''

BILL OF MATERIAL - N. ABUT.

Bar	No.	Size	Length	Shape
a1(E)	4	#6	4'-0''	———
a2(E)	16	#5	30'-1''	———
d(E)	6	#4	5'-2''	L
d1(E)	6	#5	3'-11''	⌊
h1(E)	6	#5	30'-1''	———
Concrete Removal			Cu. Yd.	7.5
Concrete Superstructure			Cu. Yd.	7.5
Reinforcement Bars, Epoxy Coated			Pound	760

Bars indicated thus 4x2-#5 etc. indicates 4 line of bars with 2 lengths per line.

DESIGNED JSB	EXAMINED	DATE JANUARY 17, 2018	STATE OF ILLINOIS DEPARTMENT OF TRANSPORTATION
CHECKED SMR	ACTING ENGINEER OF STRUCTURAL SERVICES		
DRAWN daburdell	PASSED	REVISED	
CHECKED JSB / SMR	ENGINEER OF BRIDGES AND STRUCTURES	REVISED	

JOINT REMOVAL AND REPLACEMENT
SN 048-0076 (WB)
SHEET NO. 3 OF 18 SHEETS

F.A.P. RTE.	SECTION	COUNTY	TOTAL SHEETS	SHEET NO.
313	94(16, 17)RS, 48(17,18)RS	KNOX	118	92

CONTRACT NO. 68339
ILLINOIS FED. AID PROJECT

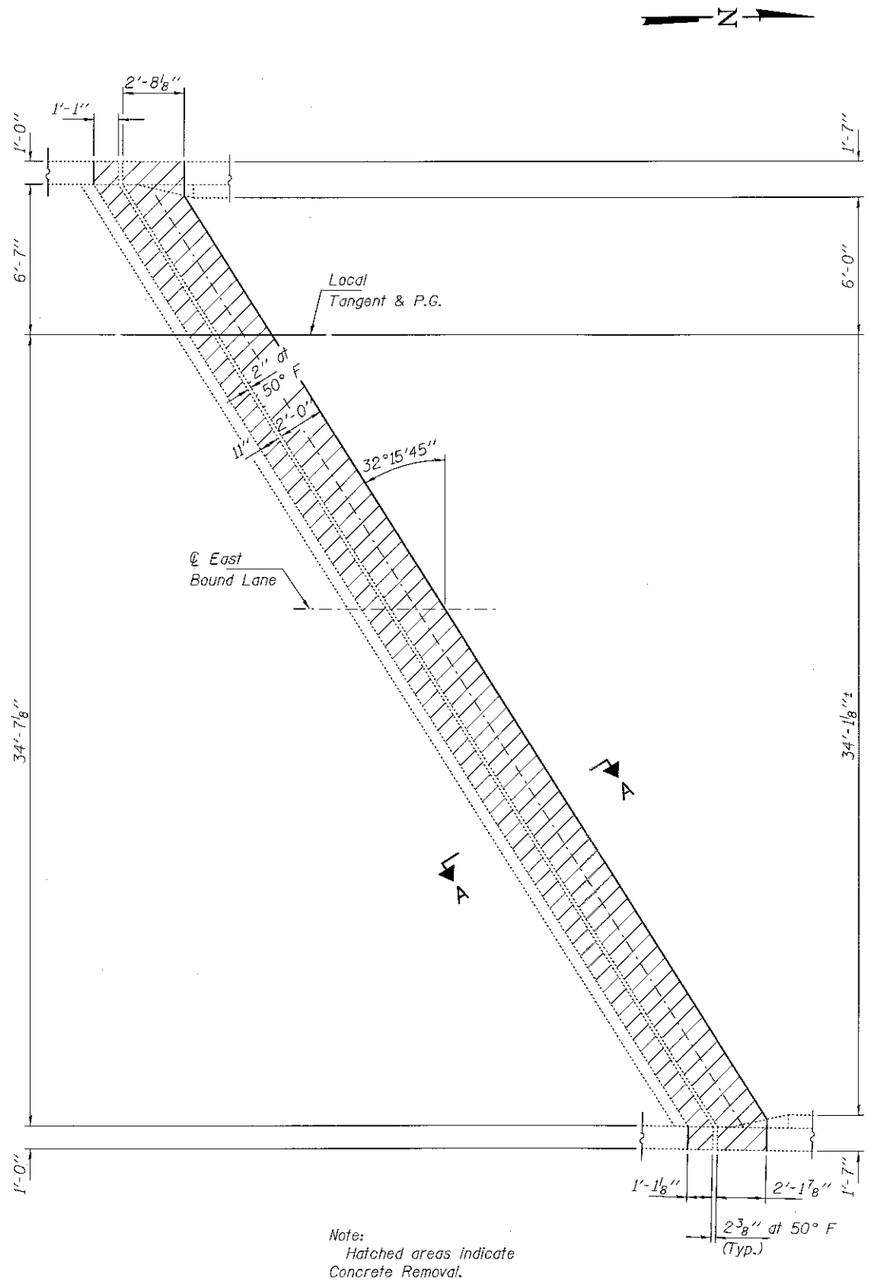

Note:
Hatched areas indicate
Concrete Removal.

CONCRETE REMOVAL

South Abutment

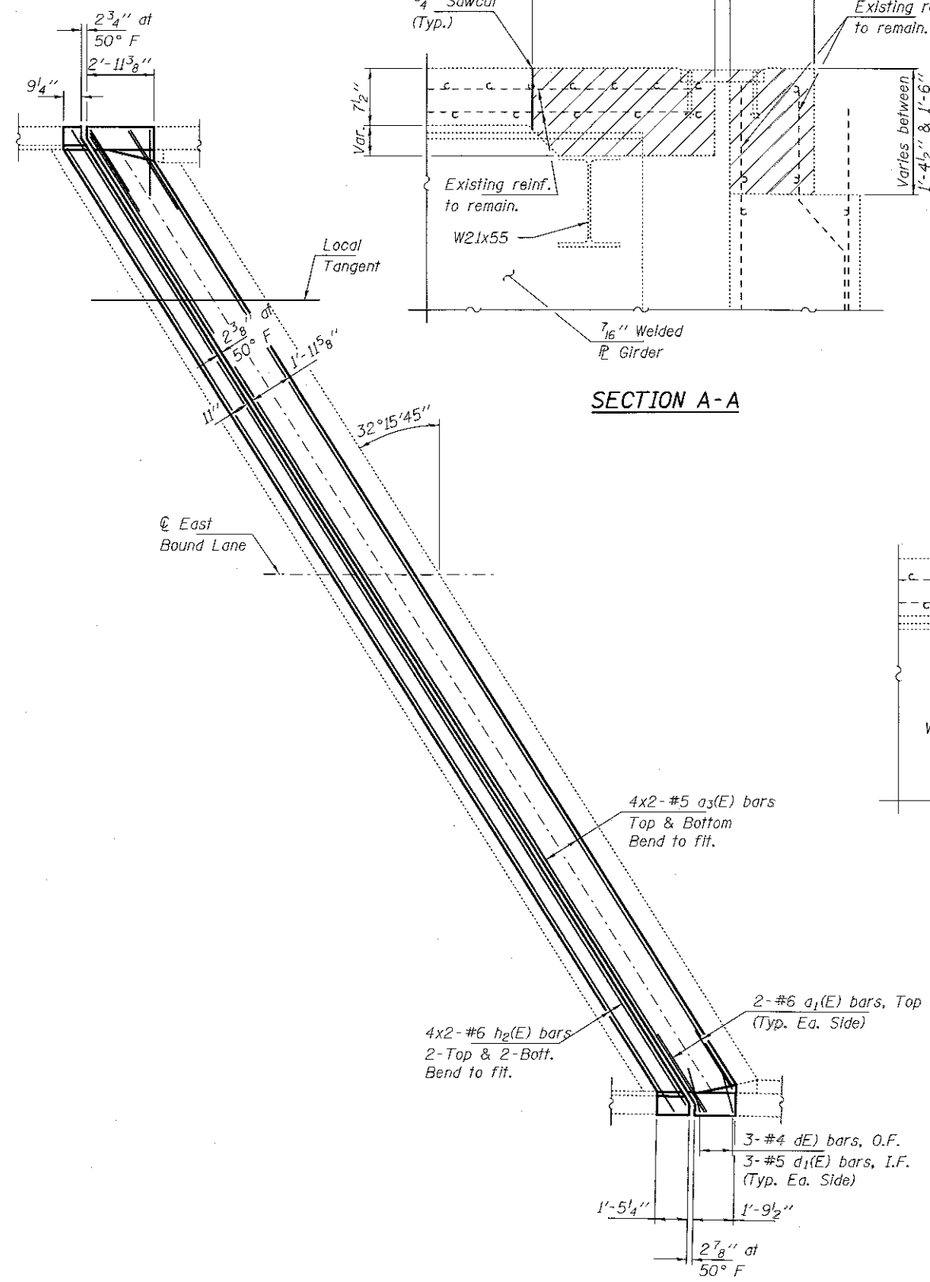

CONCRETE PLACEMENT

South Abutment

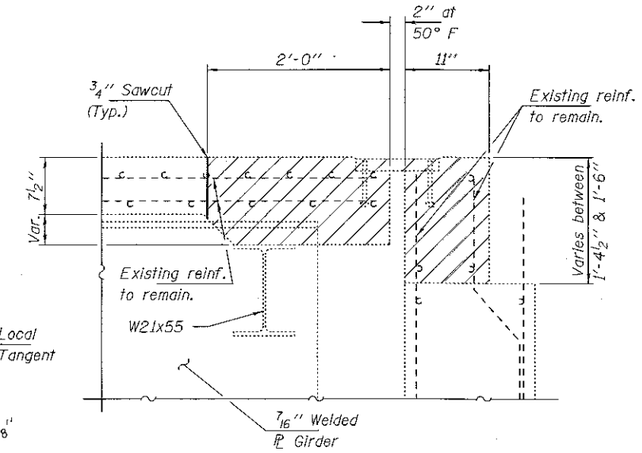

SECTION A-A

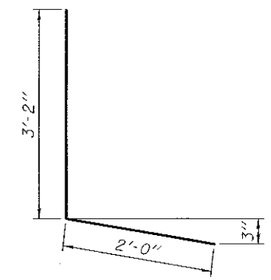

BAR d(E)

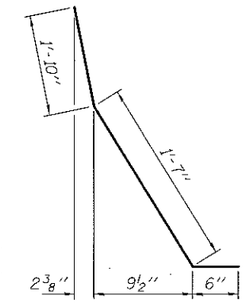

BAR d1(E)

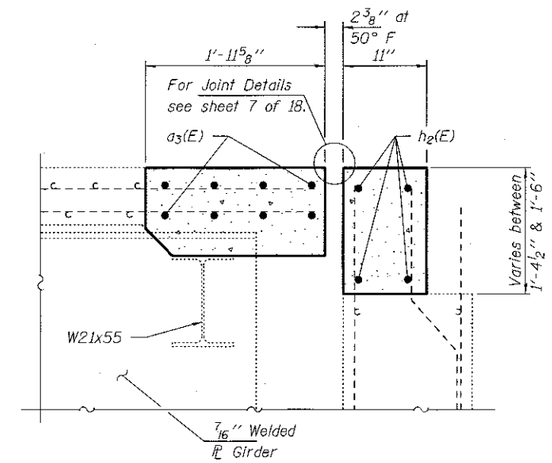

SECTION B-B

MINIMUM BAR LAP

#5 bar = 3'-6"

BILL OF MATERIAL - S. ABUT.

Bar	No.	Size	Length	Shape
$a_1(E)$	4	#6	4'-0"	
$a_3(E)$	16	#5	26'-10"	
d(E)	6	#4	5'-2"	
$d_1(E)$	6	#5	3'-11"	
$h_2(E)$	8	#5	26'-10"	
$h_4(E)$	12	#5	8'-10"	
v(E)	10	#5	3'-3"	
Concrete Removal			Cu. Yd.	7.7
Concrete Structures			Cu. Yd.	1.6
Concrete Superstructure			Cu. Yd.	6.7
Reinforcement Bars, Epoxy Coated			Pound	890

Bars indicated thus 4x2-#5 etc. indicates 4 line of bars with 2 lengths per line.

Note:
See sheet 11 of 18 for $h_4(E)$ & v(E) placement.

DESIGNED JSB	EXAMINED	DATE JANUARY 17, 2018	STATE OF ILLINOIS DEPARTMENT OF TRANSPORTATION
CHECKED SMR	ACTING ENGINEER OF STRUCTURAL SERVICES		
DRAWN dahurdell	PASSED	REVISED	
CHECKED JSB / SMR	ENGINEER OF BRIDGES AND STRUCTURES	REVISED	

JOINT REMOVAL AND REPLACEMENT
SN 048-0077 (EB)

SHEET NO. 4 OF 18 SHEETS

F.A.P. RTE.	SECTION	COUNTY	TOTAL SHEETS	SHEET NO.
313	94(16, 17)RS, 48(17,18)RS	KNOX	118	93

CONTRACT NO. 68339

ILLINOIS FED. AID PROJECT

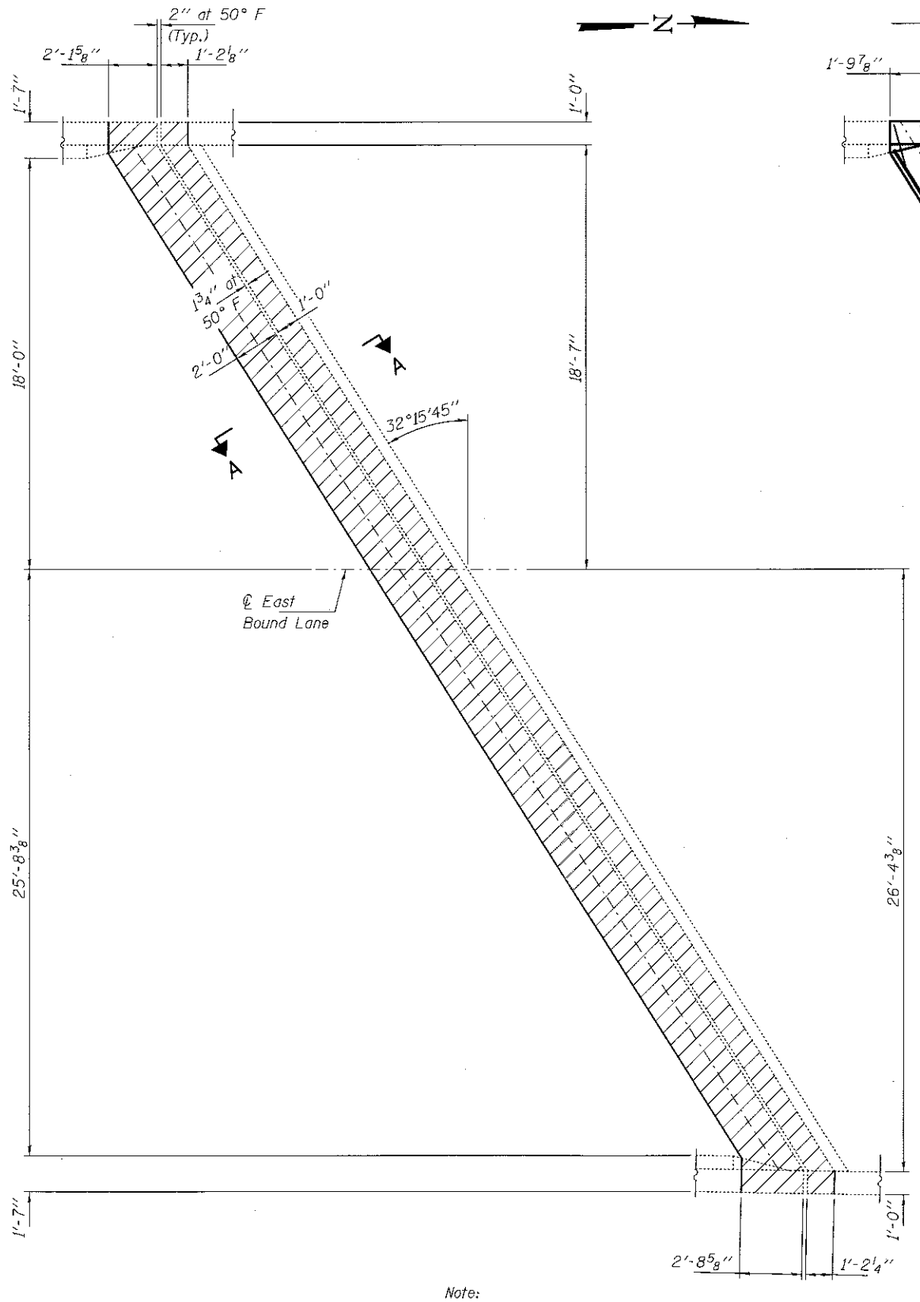

Note:
Hatched areas indicate
Concrete Removal.

CONCRETE REMOVAL

North Abutment

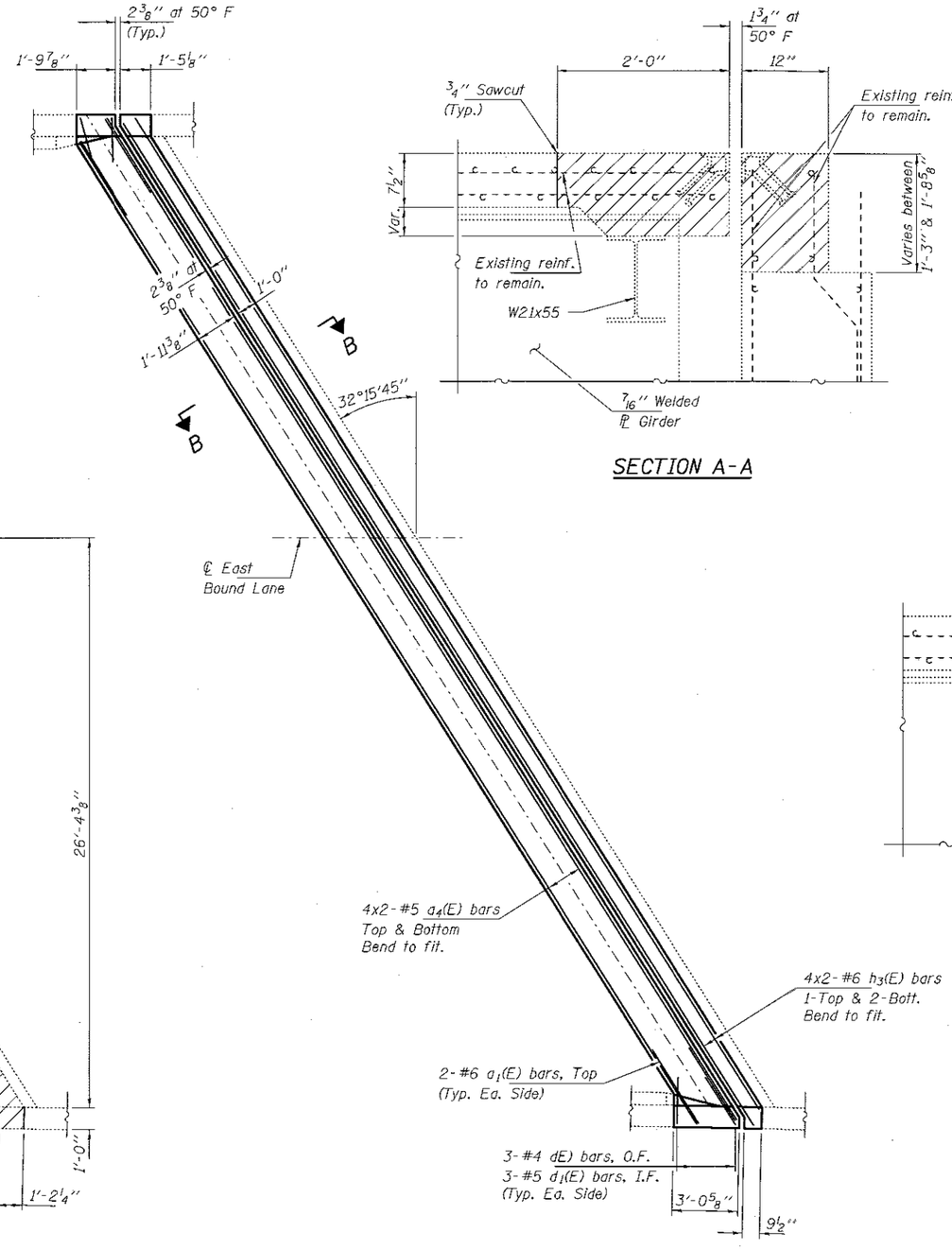

CONCRETE PLACEMENT

North Abutment

SECTION A-A

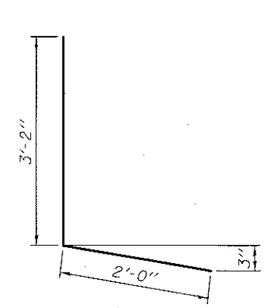

BAR d(E)

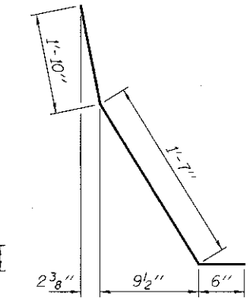

BAR d1(E)

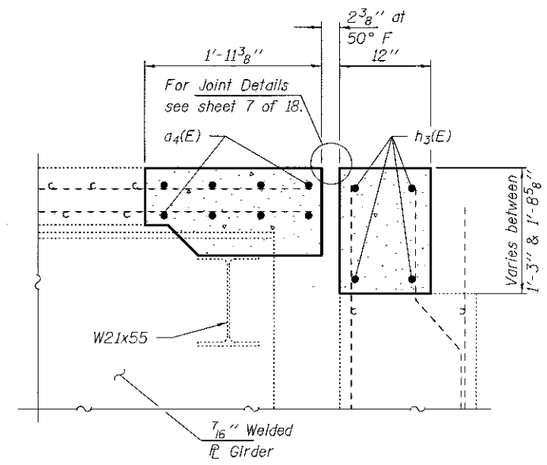

SECTION B-B

MINIMUM BAR LAP

#5 bar = 3'-6"

BILL OF MATERIAL - N. ABUT.

Bar	No.	Size	Length	Shape
a1(E)	4	#6	4'-0"	———
a3(E)	16	#5	29'-0"	———
d(E)	6	#4	5'-2"	L
d1(E)	6	#5	3'-11"	L
h3(E)	8	#5	29'-0"	———
Concrete Removal			Cu. Yd.	7.3
Concrete Superstructure			Cu. Yd.	7.3
Reinforcement Bars, Epoxy Coated			Pound	730

Bars indicated thus 4x2-#5 etc. indicates
4 line of bars with 2 lengths per line.

DESIGNED JSB	EXAMINED	DATE JANUARY 17, 2018	STATE OF ILLINOIS DEPARTMENT OF TRANSPORTATION
CHECKED SMR	ACTING ENGINEER OF STRUCTURAL SERVICES		
DRAWN daburdell	PASSED	REVISED	
CHECKED JSB / SMR	ENGINEER OF BRIDGES AND STRUCTURES	REVISED	

JOINT REMOVAL AND REPLACEMENT
SN 048-0077 (EB)

SHEET NO. 5 OF 18 SHEETS

F.A.P. RTE.	SECTION	COUNTY	TOTAL SHEETS	SHEET NO.
313	94(1B, 17BRS, 48(17,18)BRS	KNOX	118	94

CONTRACT NO. 68339

ILLINOIS FED. AID PROJECT

Notes:
Drains shall be located clear of all diaphragms.
The exterior surfaces of the floor drains shall be painted according to Article 506 with the finish coat as specified. The exterior surfaces of the drains shall be cleaned according to the Society of Protective Coating's Spec. SSPC-SP1 prior to painting.
Fiberglass pipe shall conform to ASTM D 2996, with short-time rupture strength hoop tensile stress of 3,000 p.s.i. minimum.
Galvanize clamping device according to AASHTO M232. Cost of clamping device and inserts is included with Floor Drains.
See sheet 1 of 18 for drain locations.
Concrete removal and replacement at drain locations shall be paid for as Deck Slab Repair (Full Depth, Type 1).

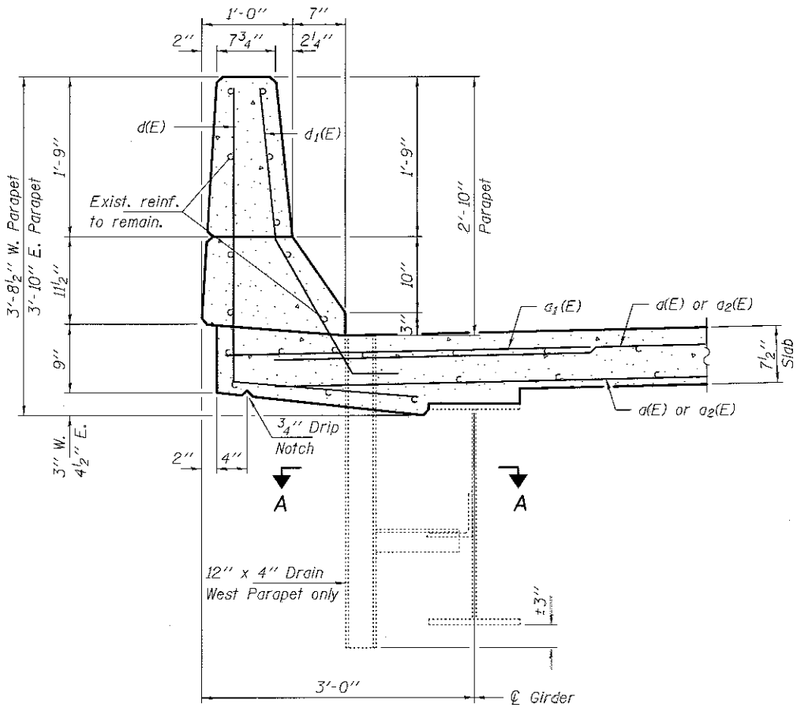

TYPICAL SECTION THRU
BRIDGE PARAPET - 0076 (WB)

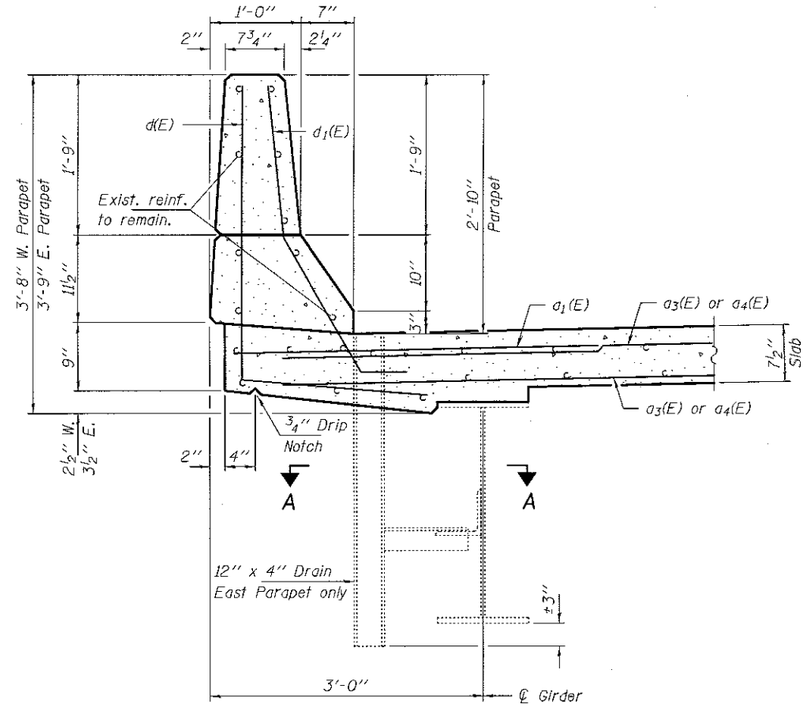

TYPICAL SECTION THRU
BRIDGE PARAPET - 0077 (EB)

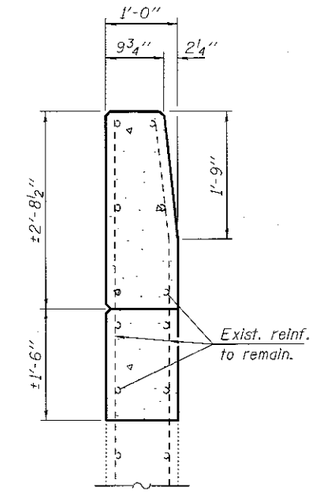

TYPICAL SECTION THRU
PARAPET AT APPROACH

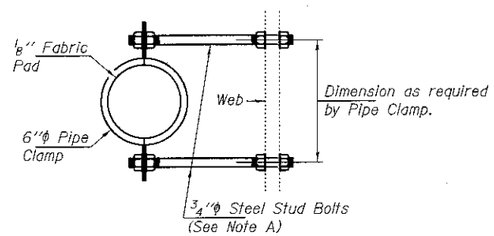

SECTION A-A

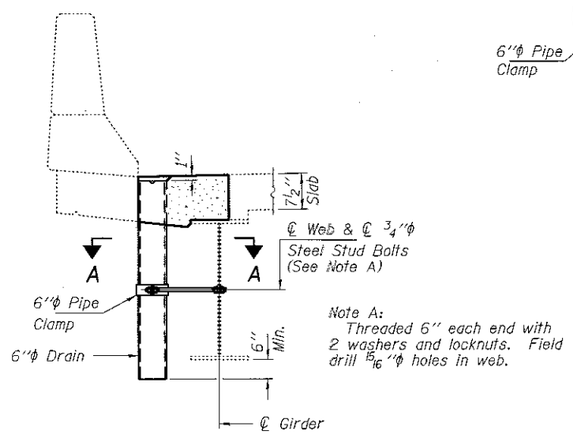

Note A:
Threaded 6" each end with 2 washers and locknuts. Field drill 5/16"ϕ holes in web.

DRAIN DETAIL
(West Parapet only - 0076)
(East Parapet only - 0077)

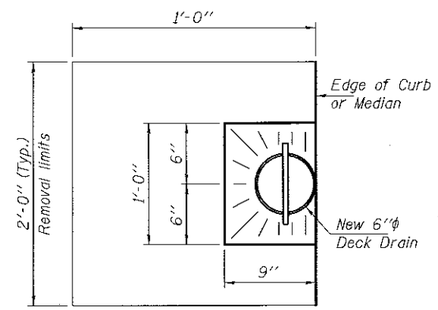

CONCRETE TREATMENT AT DRAINS

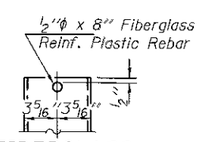

FIBERGLASS
PIPE

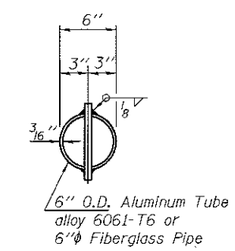

TOP PLAN
(Showing Aluminum Tube)

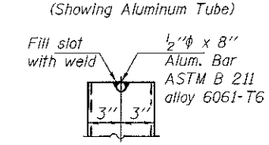

ALUMINUM
TUBE

DESIGNED JSB	EXAMINED Timothy A. Ahlgrim ACTING ENGINEER OF STRUCTURAL SERVICES	DATE JANUARY 17, 2018	STATE OF ILLINOIS DEPARTMENT OF TRANSPORTATION
CHECKED SMR			
DRAWN dahurdell	PASSED A. Carl Pfeiffer ENGINEER OF BRIDGES AND STRUCTURES	REVISED	
CHECKED JSB / SMR		REVISED	

JOINT REMOVAL AND REPLACEMENT
SN 048-0076 (WB) & 0077 (EB)
SHEET NO. 6 OF 18 SHEETS

F.A.P. RTE.	SECTION	COUNTY	TOTAL SHEETS	SHEET NO.
313	94(16, 17)RS, 48(17,18)RS	KNOX	118	95

CONTRACT NO. 68339
ILLINOIS FED. AID PROJECT

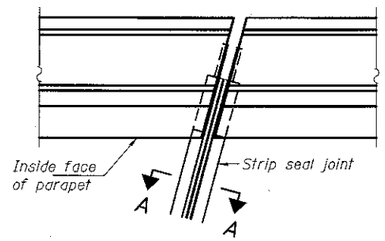

FOR SKEWS = 30°

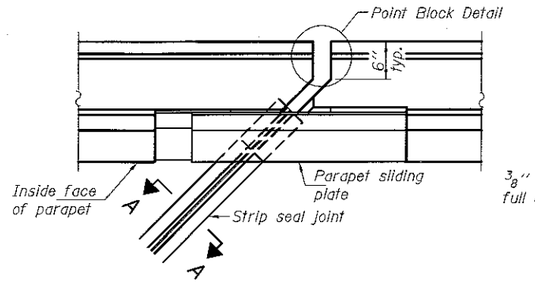

FOR SKEWS > 30°

PLAN AT PARAPET

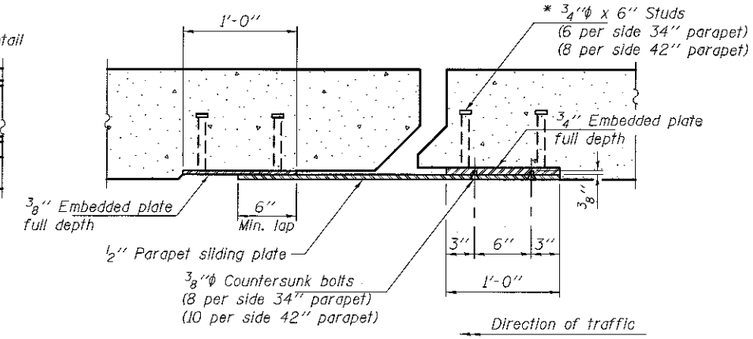

SECTION B-B

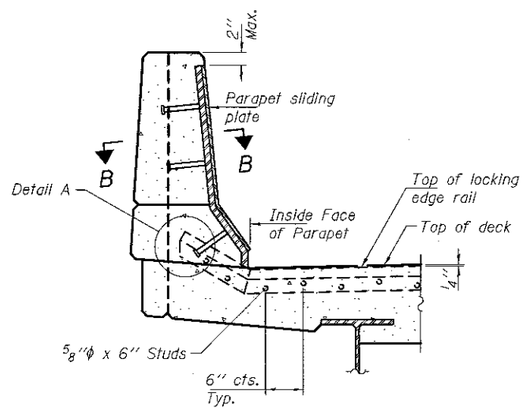

ELEVATION AT PARAPET

(Skews > 30° shown. Skews ≤ 30° similar except as shown in plan view.)

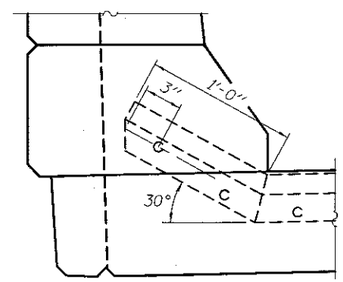

DETAIL A

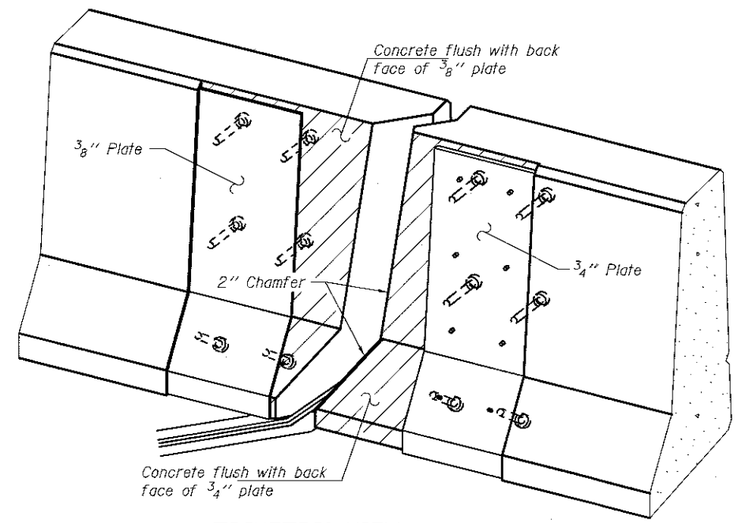

TRIMETRIC VIEW

(Showing embedded plates only)

Notes:

The strip seal shall be made continuous and shall have a minimum thickness of 1/4". The configuration of the strip seal shall match the configuration of the locking edge rails. Open or "webbed" strip seal gland configurations are not permitted. The gland shall be sized for a maximum rated movement of 4 inches.

The locking edge rails depicted are configured for typical applications and are conceptual only. The actual configuration of the locking edge rails and matching strip seal may vary from manufacturer to manufacturer provided they fit the application and meet the minimum anchorage shown. Flanged edge rails, however, will not be allowed. Locking edge rails may exceed the 4 1/2" maximum depth provided the anchorage system is revised according to the manufacturer's recommendation.

The manufacturer's recommended installation methods shall be followed.

All steel components shall be galvanized after fabrication according to Article 520.03 of the Standard Specifications.

The Maximum space between locking edge rail segments shall be 3/16" and sealed with a suitable sealant; however, any rail joint within 10' measured perpendicular to the face of the curb or parapet shall be welded as shown in the locking edge rail splice detail.

Cost of parapet sliding plates, embedded plates, and anchorage studs included with Preformed Joint Strip Seal.

34" F-shape barrier shown. 42" F-shape similar as noted.

The concrete opening below the strip seal will vary based on the locking edge rail chosen by the Contractor. Deck and parapet lengths shown elsewhere in the plans are dimensioned to the concrete opening, not the joint opening, and are based on the rolled locking edge rail. If the Contractor elects to use a different locking edge rail, dimensional adjustments may be required. One exception to this would be the strip seal joint at the end of the precast bridge approach slab. For these cases the pavement connector length shall be adjusted, not the length of the bridge approach slab.

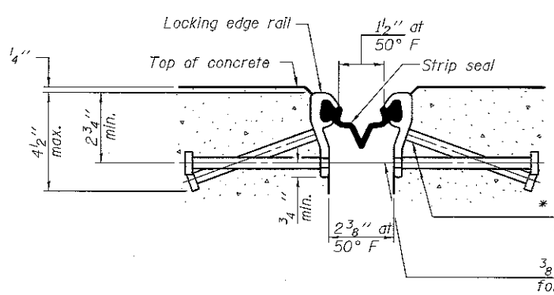

SHOWING ROLLED RAIL JOINT

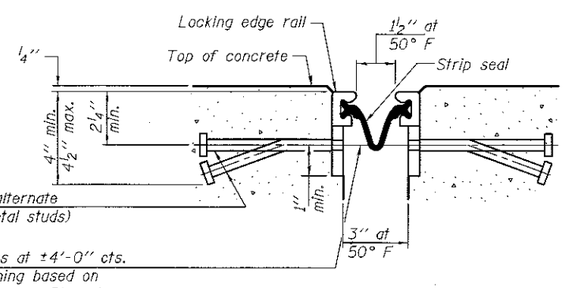

SHOWING WELDED RAIL JOINT

* 5/8"ϕ x 6" studs at 6" cts. (alternate angled/bent studs with horizontal studs)

3/8"ϕ threaded rods in 7/16"ϕ holes at ±4'-0" cts. for holding the proper joint opening based on the temperature during the deck pour. Place to miss studs. All rods shall be burned, or sawed off flush with the plates after concrete is set.

SECTION A-A

* Granular or solid flux filled headed studs conforming to Article 1006.32 of the Std. Specs., automatically end welded.

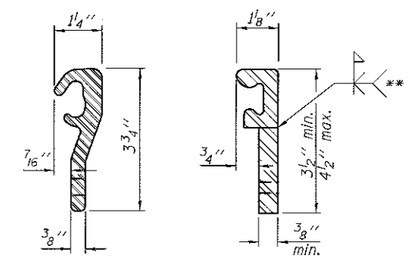

ROLLED (EXTRUDED) RAIL

WELDED RAIL

LOCKING EDGE RAILS

** Back gouge not required if complete joint penetration is verified by mock-up.

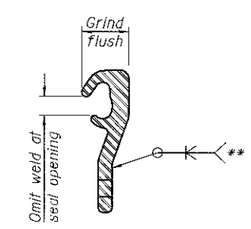

LOCKING EDGE RAIL SPLICE

The inside of the locking edge rail groove shall be free of weld residue. Rolled rail shown, welded rail similar.

BILL OF MATERIAL

Item	Unit	Total
Preformed Joint Strip Seal	Foot	215

EJ-SS 8-11-17

DESIGNED JSB	EXAMINED	ACTING ENGINEER OF STRUCTURAL SERVICES	DATE JANUARY 17, 2018	STATE OF ILLINOIS DEPARTMENT OF TRANSPORTATION
CHECKED SMR	PASSED	ENGINEER OF BRIDGES AND STRUCTURES	REVISED	
DRAWN daburdell			REVISED	
CHECKED JSB / SMR				

PREFORMED JOINT STRIP SEAL
SN 048-0076 (WB) & 0077 (EB)

SHEET NO. 7 OF 18 SHEETS

F.A.P. RTE.	SECTION	COUNTY	TOTAL SHEETS	SHEET NO.
313	94(16, 17)RS, 48(17,18)RS	KNOX	118	96

CONTRACT NO. 68339

ILLINOIS FED. AID PROJECT

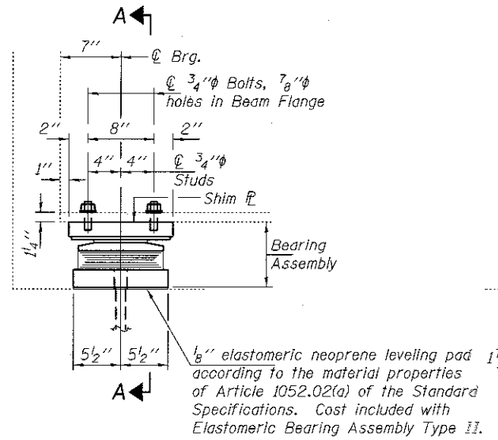

ELEVATION AT ABUTMENT

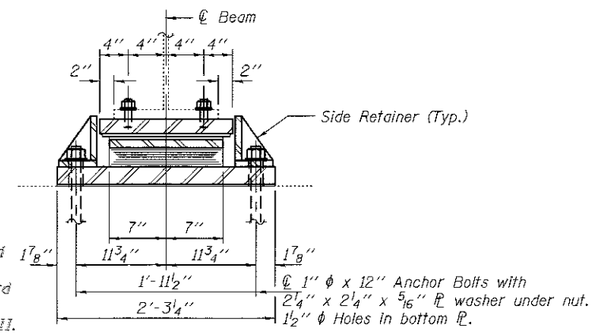

SECTION A-A

TYPE II TFE ELASTOMERIC EXP. BRG.

BEAM REACTIONS

RL	(K)	33.7
RR	(K)	39.2
Imp.	(K)	9.7
R (Total)	(K)	82.6

Notes:

Diaphragm removal and reinstallation may be required to facilitate drilling holes. Cost included with Furnishing and Erecting Structural Steel.

New steel extensions, shim plates and connection bolts are included with Furnishing and Erecting Structural Steel.

Prior to ordering any material, the Contractor shall verify in the field all bearing height and shim thickness dimensions. Adjustment must account for deck heave due to pack rust (if present).

Min. jack capacity = 45 Tons.

Anchor bolts shall be ASTM F1554 all-thread (or an Engineer-approved alternate material) of the grade(s) and diameter(s) specified. ASTM A307 Grade C anchor bolts may be used in lieu of ASTM F1554 Grade 36 (Fy=36ksi). The corresponding specified grade of AASHTO M314 anchor bolts may be used in lieu of ASTM F1554.

Anchor bolts at fixed bearings may be either cast in place or installed in holes drilled after the supported member is in place.

Anchor bolts for Type II bearings shall be placed in holes drilled through the bottom bearing plate after members are in place. Side retainers shall be placed after bolts are installed.

Drilled and set anchor bolts shall be installed according to Article 521.06 of the Standard Specifications.

Side retainers shall be included in the cost of Elastomeric Bearing Assembly, Type II.

The 1/8" PTFE sheet shall be bonded directly to the top steel plate with a two-component, medium viscosity epoxy resin, conforming to the requirements of the Federal Specification MMM-A-134, Type I. The bond agent shall be applied on the full area of the contact surfaces.

Bonding of 1/8" PTFE sheet during vulcanizing process will be permitted provided the process and method of adjusting assembly height is approved by the Engineer.

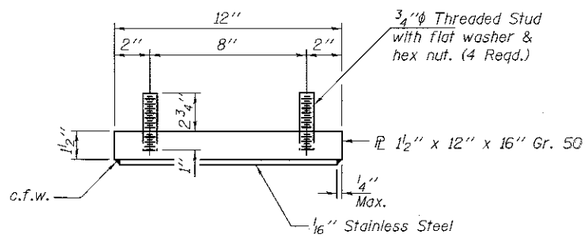

TOP BEARING ASSEMBLY

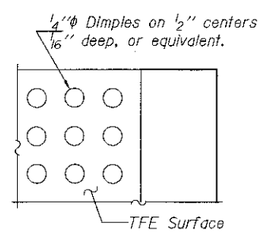

PLAN-PTFE SURFACE

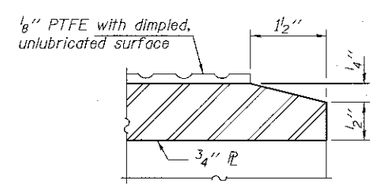

SECTION THRU PTFE

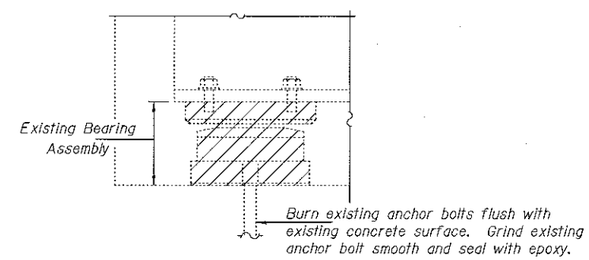

EXISTING BEARING REMOVAL DETAIL

Cost Included with Jack and Remove Existing Bearings.

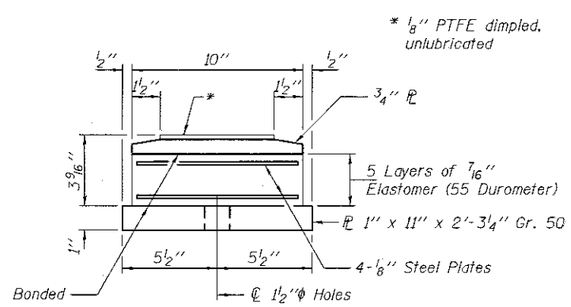

BOTTOM BEARING ASSEMBLY

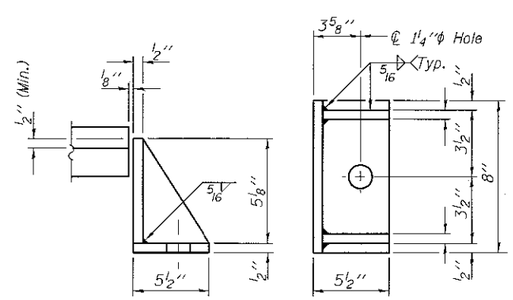

SIDE RETAINER

Equivalent rolled angle with stiffeners will be allowed in lieu of welded plates.

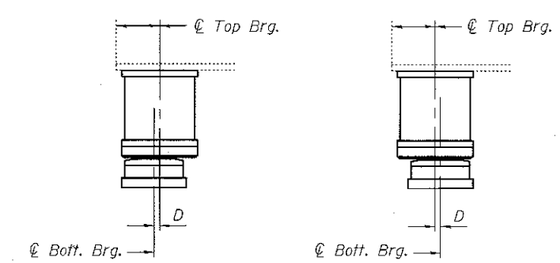

BELOW 50° F. (Move bott. brg. away from fixed brg.)

ABOVE 50° F. (Move bott. brg. toward fixed brg.)

SETTING ANCHOR BOLTS AT EXP. BRG.

D = 1/8" per each 100' of expansion for every 15° temp. change from the normal temp. of 50°F.

BILL OF MATERIAL

Item	Unit	Total
Elastomeric Bearing Assembly, Type II	Each	7
Jack and Remove Existing Bearings	Each	7
Anchor Bolts 1"φ	Each	14

TYII/REPS 12-03-2008

DESIGNED JSB	EXAMINED	ACTING ENGINEER OF STRUCTURAL SERVICES	DATE JANUARY 17, 2018
CHECKED SMR	PASSED	ENGINEER OF BRIDGES AND STRUCTURES	REVISED
DRAWN daburdell			REVISED
CHECKED JSB / SMR			

STATE OF ILLINOIS
DEPARTMENT OF TRANSPORTATION

SOUTH ABUTMENT BEARING REPLACEMENT DETAILS
SN 048-0076 (WB)

SHEET NO. 8 OF 18 SHEETS

F.A.P. RTE.	SECTION	COUNTY	TOTAL SHEETS	SHEET NO.
313	94(16, 17)RS, 48(17,18)RS	KNOX	118	97
		CONTRACT NO. 68339		
		ILLINOIS FED. AID PROJECT		

BEAM REACTIONS - 0077

R℄	(K)	26.45
R⅊	(K)	37.82
Imp.	(K)	10.08
R (Total)	(K)	73.85

BEAM REACTIONS - 0076

R℄	(K)	32.58
R⅊	(K)	39.00
Imp.	(K)	9.79
R (Total)	(K)	81.37

Notes:

Diaphragm removal and reinstallation may be required to facilitate drilling holes. Cost included with Furnishing and Erecting Structural Steel.

New steel extensions, shim plates and connection bolts are included with Furnishing and Erecting Structural Steel.

Prior to ordering any material, the Contractor shall verify in the field all bearing height and shim thickness dimensions. Adjustment must account for deck heave due to pack rust (if present).

Min. jack capacity = 45 Tons.

Anchor bolts shall be ASTM F1554 all-thread (or an Engineer-approved alternate material) of the grade(s) and diameter(s) specified. ASTM A307 Grade C anchor bolts may be used in lieu of ASTM F1554 Grade 36 (Fy=36ksi). The corresponding specified grade of AASHTO M314 anchor bolts may be used in lieu of ASTM F1554.

Anchor bolts at fixed bearings may be either cast in place or installed in holes drilled after the supported member is in place.

Drilled and set anchor bolts shall be installed according to Article 521.06 of the Standard Specifications.

Cost of Side retainers and Stainless Steel plates shall be included in the cost of Elastomeric Bearing Assembly, Type I.

New bearing plates, steel extensions, shim plates, side retainers, anchor bolts, connection bolts, nuts and washers shall be galvanized according to AASHTO M111 or M232 as applicable.

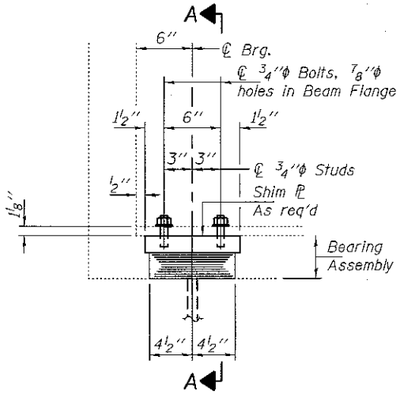

ELEVATION AT ABUTMENT

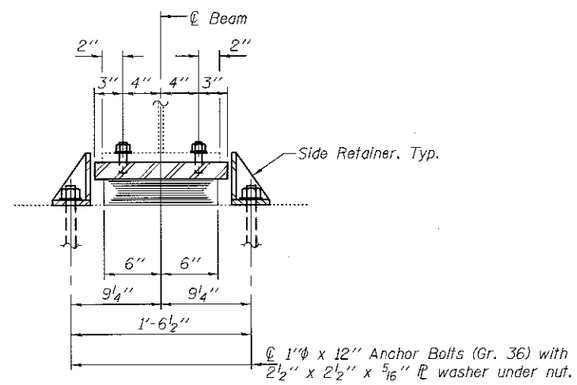

SECTION A-A

TYPE I ELASTOMERIC EXP. BRG.

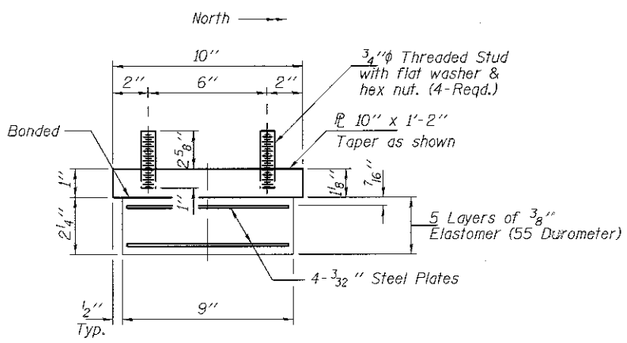

BEARING ASSEMBLY

Note:

Shim plates shall not be placed under Bearing Assembly.

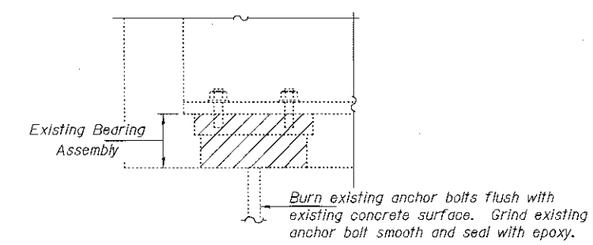

EXISTING BEARING REMOVAL DETAIL

Cost included with Jack and Remove Existing Bearings.

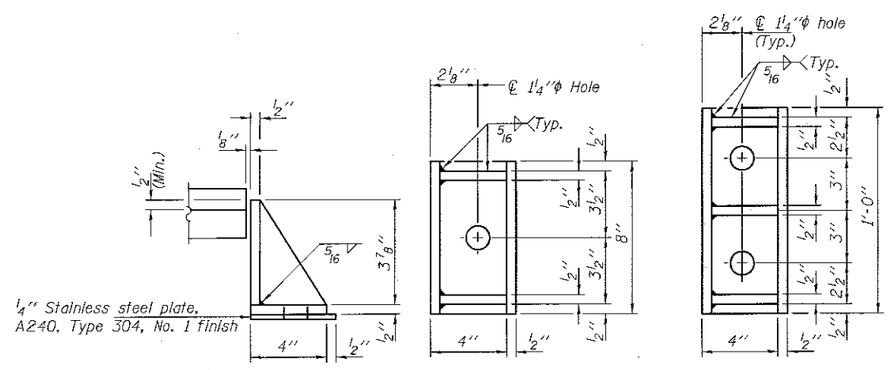

(All other locations)

(4 locations)
Inside face of Beams 1 & 7
Inside face of Beams 8 & 14

SIDE RETAINER

Equivalent rolled angle with stiffeners will be allowed in lieu of welded plates.

BILL OF MATERIAL

Item	Unit	Total
Elastomeric Bearing Assembly, Type I	Each	14
Jack and Remove Existing Bearings	Each	14
Anchor Bolts 1"ϕ	Each	32

TYI/REPS 1-18-2017

DESIGNED JSB	EXAMINED	ACTING ENGINEER OF STRUCTURAL SERVICES	DATE JANUARY 17, 2018
CHECKED SMR	PASSED	ENGINEER OF BRIDGES AND STRUCTURES	REVISED
DRAWN dahurdell			REVISED
CHECKED JSB / SMR			

STATE OF ILLINOIS
DEPARTMENT OF TRANSPORTATION

NORTH ABUTMENT BEARING REPLACEMENT DETAILS
SN 048-0076 (WB) & 0077 (EB)

SHEET NO. 9 OF 18 SHEETS

F.A.P. RTE.	SECTION	COUNTY	TOTAL SHEETS	SHEET NO.
313	94(16, 17)RS, 48(17,18)RS	KNOX	118	98

CONTRACT NO. 68339

ILLINOIS FED. AID PROJECT

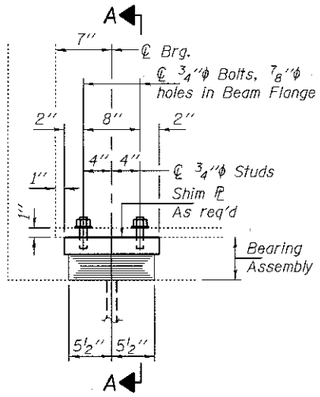

ELEVATION AT ABUTMENT

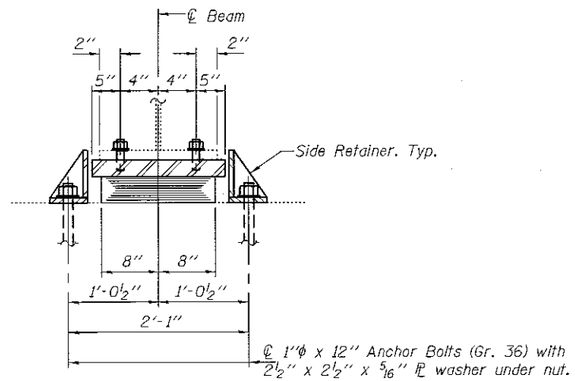

SECTION A-A

TYPE I ELASTOMERIC EXP. BRG.

BEAM REACTIONS

RP	(K)	26.5
RL	(K)	37.3
Imp.	(K)	10.0
R (Total)	(K)	73.8

Notes:

Diaphragm removal and reinstallation may be required to facilitate drilling holes. Cost included with Furnishing and Erecting Structural Steel.

New steel extensions, shim plates and connection bolts are included with Furnishing and Erecting Structural Steel.

Prior to ordering any material, the Contractor shall verify in the field all bearing height and shim thickness dimensions. Adjustment must account for deck heave due to pack rust (if present).

Min. jack capacity = 45 Tons.

Anchor bolts shall be ASTM F1554 all-thread (or an Engineer-approved alternate material) of the grade(s) and diameter(s) specified. ASTM A307 Grade C anchor bolts may be used in lieu of ASTM F1554 Grade 36 (Fy=36ksi). The corresponding specified grade of AASHTO M314 anchor bolts may be used in lieu of ASTM F1554.

Anchor bolts at fixed bearings may be either cast in place or installed in holes drilled after the supported member is in place.

Drilled and set anchor bolts shall be installed according to Article 521.06 of the Standard Specifications.

Cost of Side retainers and Stainless Steel plates shall be included in the cost of Elastomeric Bearing Assembly, Type I.

See sheet 8 of 18 for Existing Bearing Removal Detail.

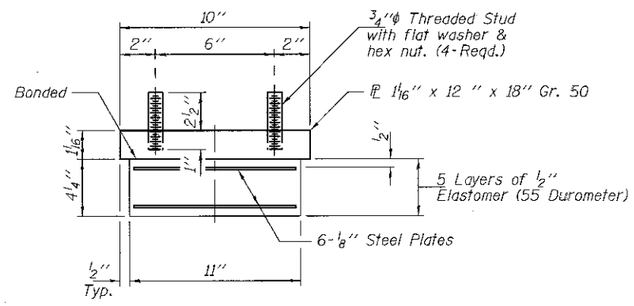

BEARING ASSEMBLY

Note:

Shim plates shall not be placed under Bearing Assembly.

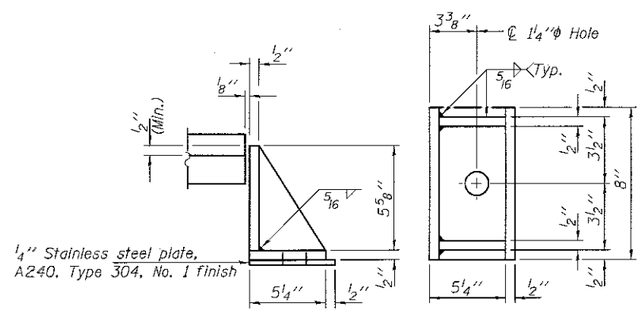

SIDE RETAINER

Equivalent rolled angle with stiffeners will be allowed in lieu of welded plates.

BILL OF MATERIAL

Item	Unit	Total
Elastomeric Bearing Assembly, Type I	Each	7
Jack and Remove Existing Bearings	Each	7
Anchor Bolts 1"ϕ	Each	14

TYI/REPS 1-18-2017

DESIGNED JSB	EXAMINED	Timothy A. Bulk	DATE JANUARY 17, 2018	STATE OF ILLINOIS DEPARTMENT OF TRANSPORTATION	SOUTH ABUTMENT BEARING REPLACEMENT DETAILS SN 048-0077 (EB)	F.A.P. RTE.	SECTION	COUNTY	TOTAL SHEETS / SHEET NO.
CHECKED SMR		ACTING ENGINEER OF STRUCTURAL SERVICES				313	94(16, 17)RS, 48(17,18)RS	KNOX	118 / 99
DRAWN daburdell	PASSED	D. Carl Puzey	REVISED					CONTRACT NO. 68339	
CHECKED JSB / SMR		ENGINEER OF BRIDGES AND STRUCTURES	REVISED		SHEET NO. 10 OF 18 SHEETS			ILLINOIS FED. AID PROJECT	

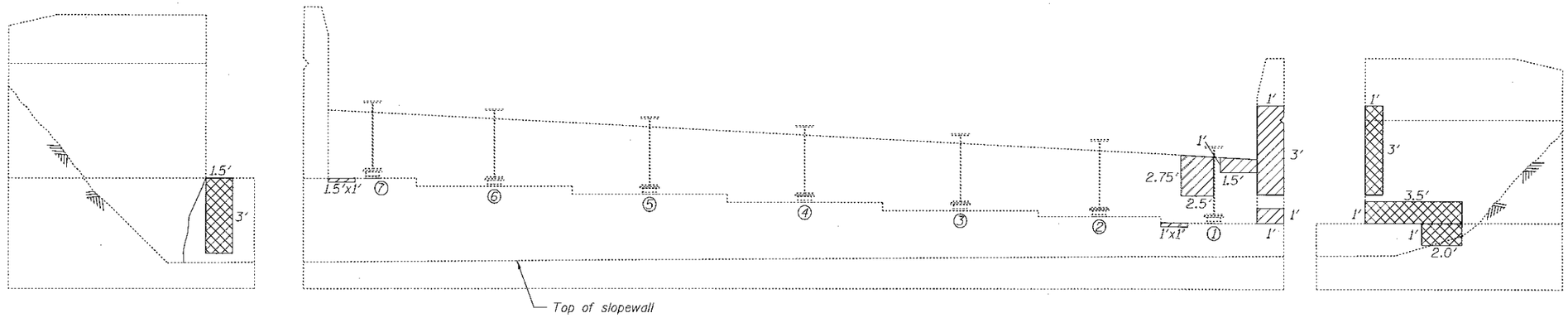

****SOUTH ABUTMENT**
(Looking South)

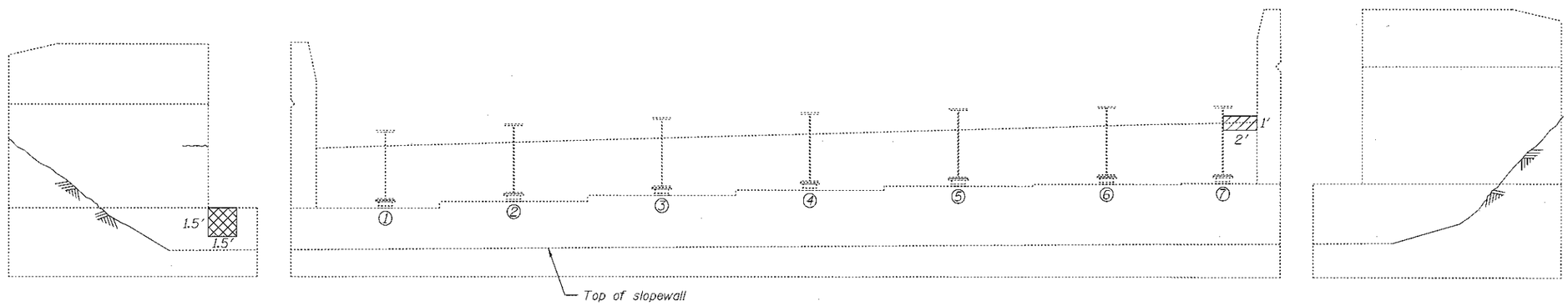

****NORTH ABUTMENT**
(Looking North)

** Superstructure not shown for clarity.

- Structural Repair of Concrete (Depth > 5")
- Structural Repair of Concrete (Depth ≤ 5")

Item	Unit	Total
Structural Repair of Concrete (Depth ≤ 5")	Sq. Ft.	16.9
Structural Repair of Concrete (Depth > 5")	Sq. Ft.	15.3

DESIGNED JSB	EXAMINED	Timothy A. Ahlvin	DATE JANUARY 17, 2018
CHECKED SMR		ACTING ENGINEER OF STRUCTURAL SERVICES	
DRAWN daburdell	PASSED	R. Carl Kunz	REVISED
CHECKED JSB / SMR		ENGINEER OF BRIDGES AND STRUCTURES	REVISED

STATE OF ILLINOIS
DEPARTMENT OF TRANSPORTATION

SUBSTRUCTURE REPAIR DETAILS
SN 048-0076 (WB)
SHEET NO. 11 OF 18 SHEETS

F.A.P. RTE.	SECTION	COUNTY	TOTAL SHEETS	SHEET NO.
313	94(16, 17)RS, 48(17,18)RS	KNOX	118	100

CONTRACT NO. 68339
ILLINOIS FED. AID PROJECT

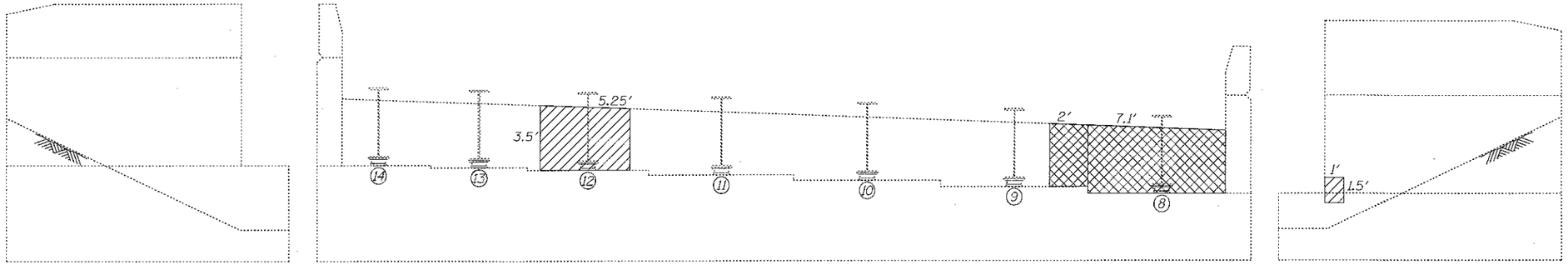

**SOUTH ABUTMENT
(Looking South)

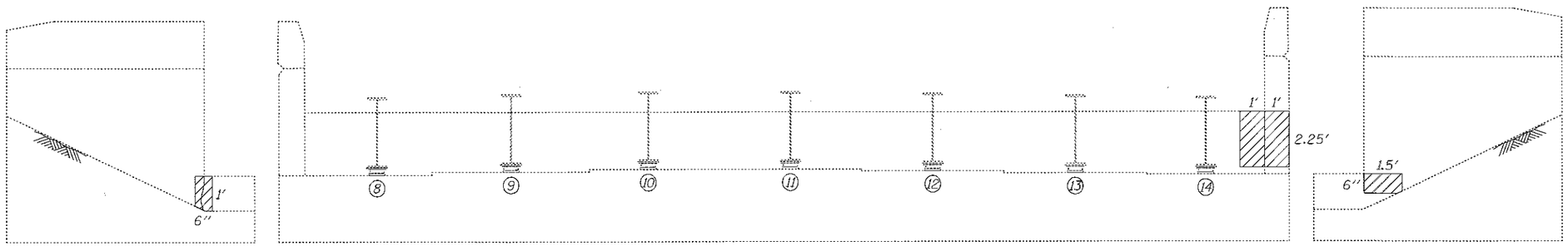

**NORTH ABUTMENT
(Looking North)

** Superstructure not shown for clarity.

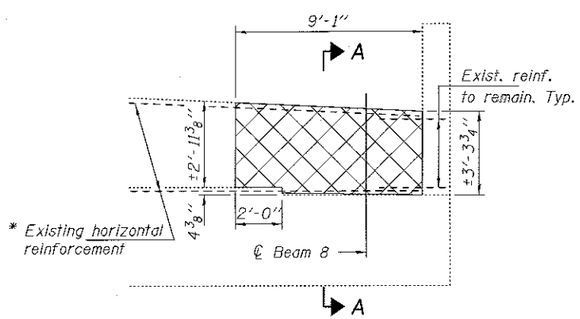

PARTIAL BACKWALL REMOVAL

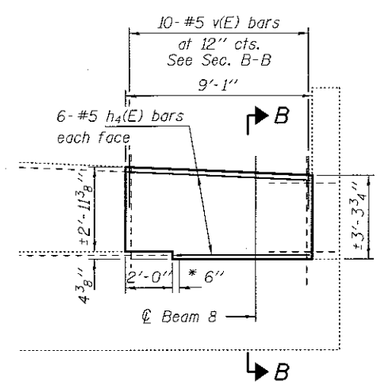

PARTIAL BACKWALL REPLACEMENT

PARTIAL ELEVATION AT SOUTH ABUTMENT
(Looking South)

Quantities for Concrete Removal, Concrete Structures and reinforcement is included in Bill of Material on sheet 4 of 18.

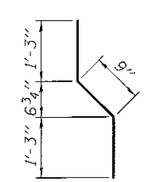

BAR v(E)

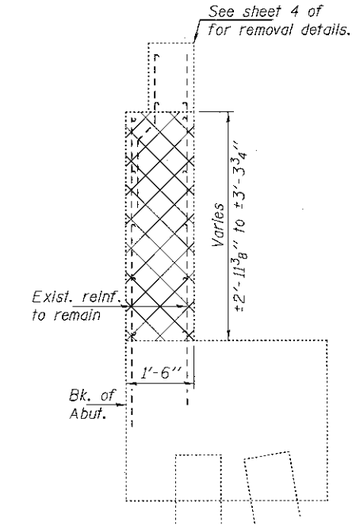

SECTION A-A

Contractor to use caution to ensure stability of sub base during removal & construction of backwall. Cost of approach shoulder removal & replacement, excavation & backfill shall be included with concrete removal.

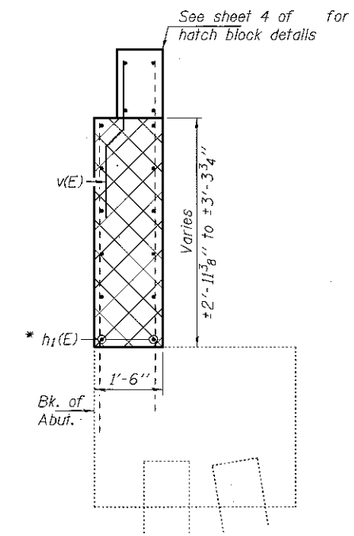

SECTION B-B

* Cut existing horizontal reinforcement in backwall 6" from removal line for installation of mechanical splicer.

- Concrete Removal & Concrete Structures
- Structural Repair of Concrete (Depth ≤ 5")

Item	Unit	Total
Structural Repair of Concrete (Depth ≤ 5")	Sq. Ft.	25.6

DESIGNED JSB	EXAMINED	DATE JANUARY 17, 2018	STATE OF ILLINOIS DEPARTMENT OF TRANSPORTATION
CHECKED SMR	ACTING ENGINEER OF STRUCTURAL SERVICES		
DRAWN dahurdell	PASSED	REVISED	
CHECKED JSB / SMR	ENGINEER OF BRIDGES AND STRUCTURES	REVISED	

SUBSTRUCTURE REPAIR DETAILS
SN 048-0077 (EB)

SHEET NO. 12 OF 18 SHEETS

F.A.P. RTE.	SECTION	COUNTY	TOTAL SHEETS	SHEET NO.
313	94(16, 17)RS, 48(17,18)RS	KNOX	118	101
		CONTRACT NO. 68339		
		ILLINOIS FED. AID PROJECT		

STATE OF ILLINOIS
DEPARTMENT OF TRANSPORTATION

ROUTE NO.	SECTION	COUNTY	TOTAL SHEETS	SHEET NO.
F.A.P. 313	68 17RS, 18-2	KNOX	43	16

SHEET NO. 8
27 SHEETS

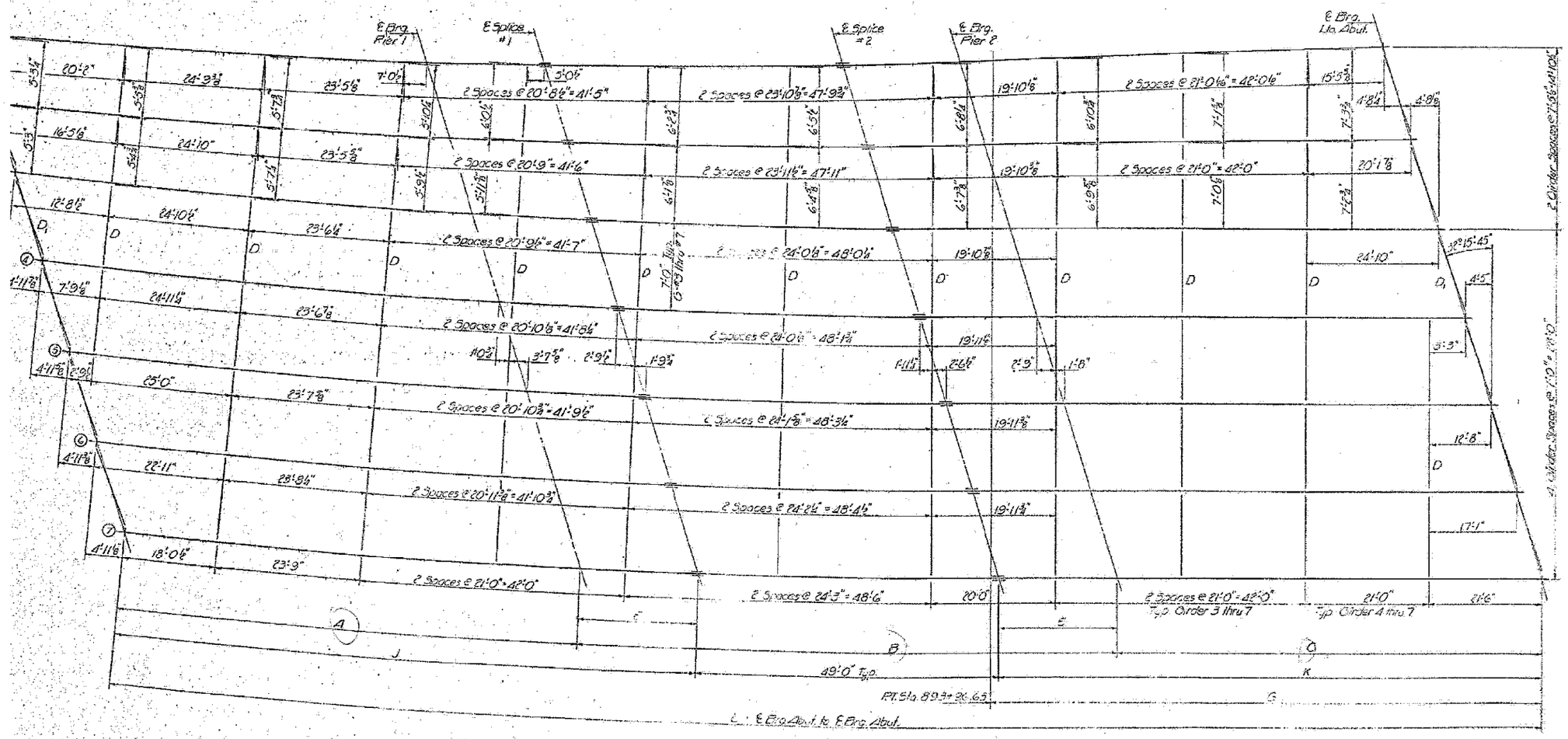

FRAMING PLAN
(All interior diaphragms are radial to ℄ Roadway)

FOR INFORMATION ONLY

WEST BOUND LANES
STRUCTURAL STEEL
F.A.P. RT. 404 SEC. 18-17RS-3
KNOX COUNTY
STA. 893+82.00

EXAMINED
PASSED
APPROVED

DESIGNED JSB	EXAMINED Timothy A. Barnhart, ACTING ENGINEER OF STRUCTURAL SERVICES	DATE JANUARY 17, 2018	STATE OF ILLINOIS DEPARTMENT OF TRANSPORTATION
CHECKED SMR	PASSED A. Carl Preuss, ENGINEER OF BRIDGES AND STRUCTURES	REVISED	
DRAWN daburdell		REVISED	
CHECKED JSB / SMR			

STEEL DETAILS
SN 048-0076 (WB)
SHEET NO. 13 OF 18 SHEETS

F.A.P. RTE.	SECTION	COUNTY	TOTAL SHEETS	SHEET NO.
313	94(16, 17)RS, 48(17,18)RS	KNOX	118	102

CONTRACT NO. 68339
ILLINOIS FED. AID PROJECT

STATE OF ILLINOIS
DEPARTMENT OF TRANSPORTATION

SHEET NO. 9
24 SHEETS

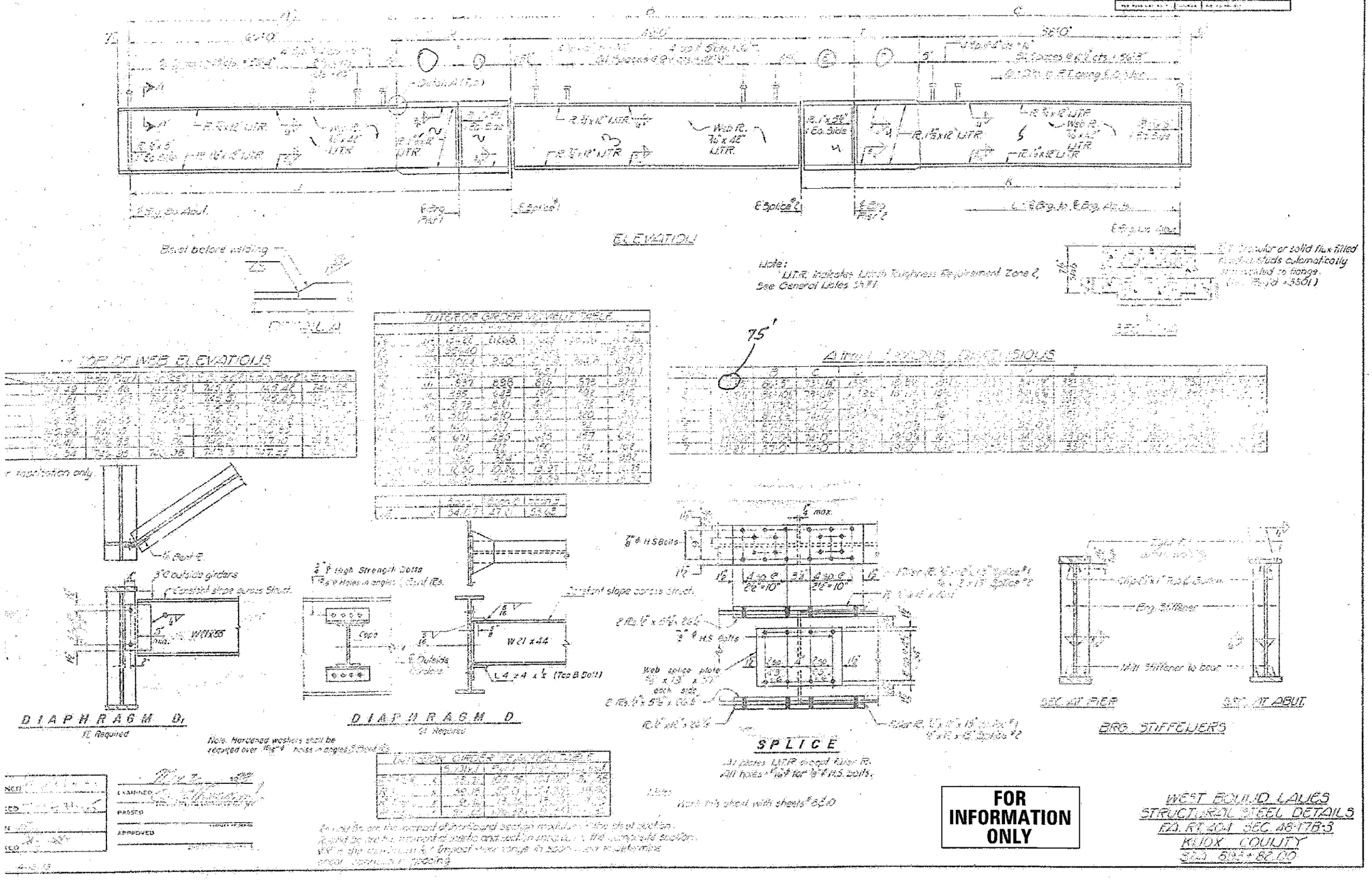

DESIGNED JSB	EXAMINED	DATE JANUARY 17, 2018	STATE OF ILLINOIS DEPARTMENT OF TRANSPORTATION
CHECKED SMR	ACTING ENGINEER OF STRUCTURAL SERVICES		
DRAWN dahurdell	PASSED	REVISED	
CHECKED JSB / SMR	ENGINEER OF BRIDGES AND STRUCTURES	REVISED	

STEEL DETAILS
SN 048-0076 (WB)

SHEET NO. 14 OF 18 SHEETS

F.A.P. RTE.	SECTION	COUNTY	TOTAL SHEETS	SHEET NO.
313	94(16, 17)RS, 48(17,18)RS	KNOX	118	103

CONTRACT NO. 68339

ILLINOIS FED. AID PROJECT

STATE OF ILLINOIS
DEPARTMENT OF TRANSPORTATION

SHEET NO. 10
17 SHEETS

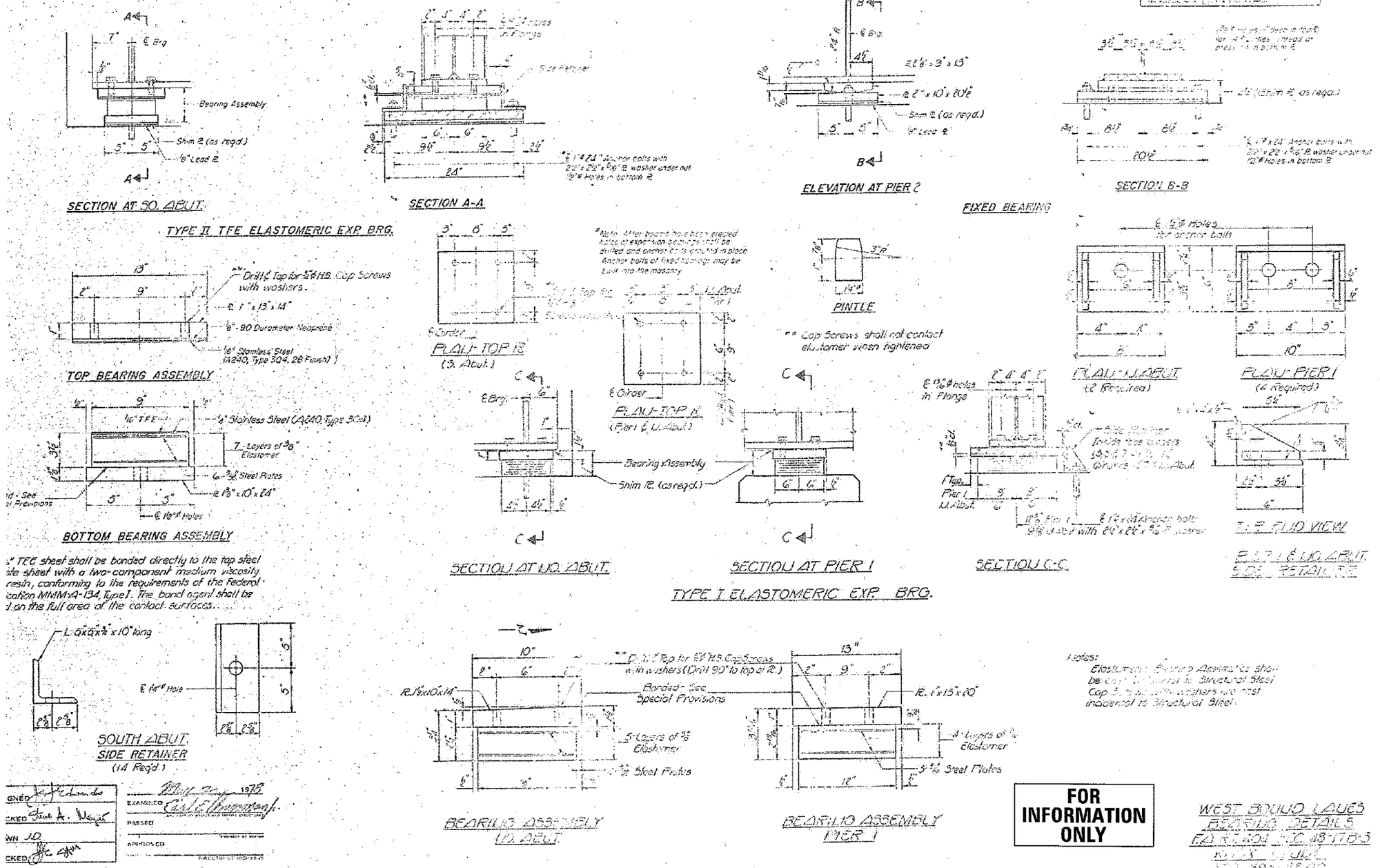

FOR INFORMATION ONLY

WEST BOUND LANES
BEARING DETAILS
FAI 74 OVER I.C. 48-17 TRS
KNOX COUNTY
SN 048-0076

DESIGNED JSB	EXAMINED Timothy A. Ahlgt ACTING ENGINEER OF STRUCTURAL SERVICES	DATE JANUARY 17, 2018	STATE OF ILLINOIS DEPARTMENT OF TRANSPORTATION	STEEL DETAILS SN 048-0076 (WB)	F.A.P. RTE.	SECTION	COUNTY	TOTAL SHEETS	SHEET NO.
CHECKED SMR	PASSED A. Carl Kropf ENGINEER OF BRIDGES AND STRUCTURES	REVISED		SHEET NO. 15 OF 18 SHEETS	313	94(16, 17)RS, 48(17,18)RS	KNOX	118	104
DRAWN dahurdell		REVISED					CONTRACT NO. 68339		
CHECKED JSB / SMR							ILLINOIS FED. AID PROJECT		

STATE OF ILLINOIS
DEPARTMENT OF TRANSPORTATION

SHEET NO. 15
27 SHEETS

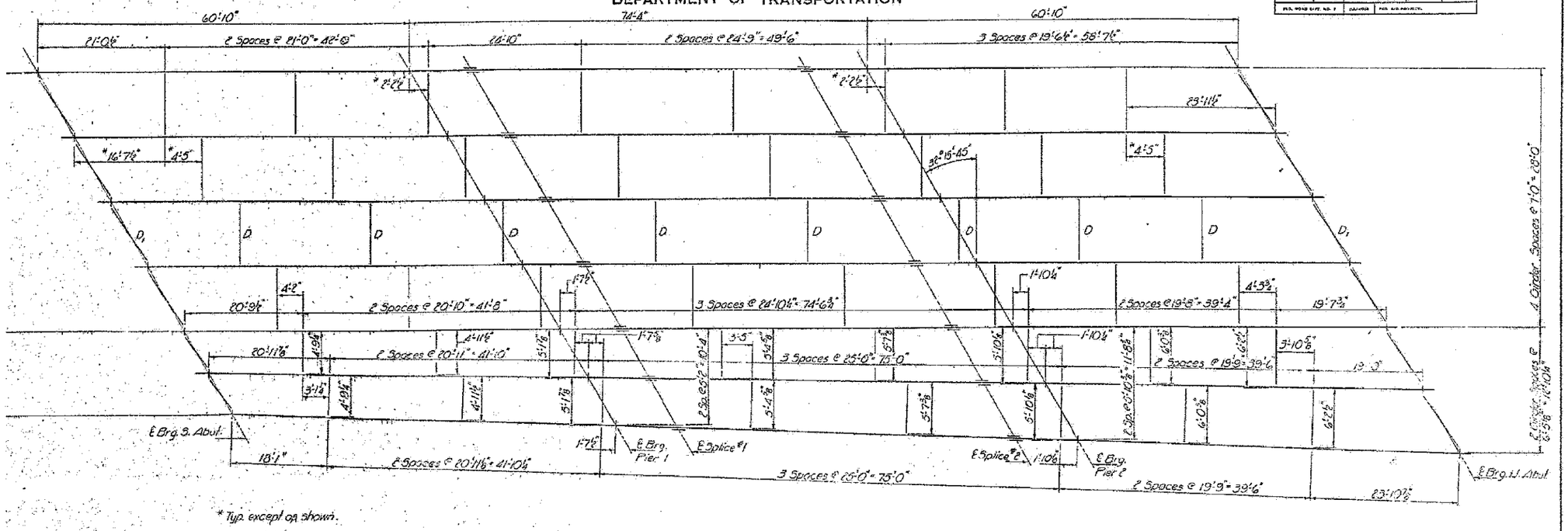

* Typ. except as shown.

FRAMING PLAN

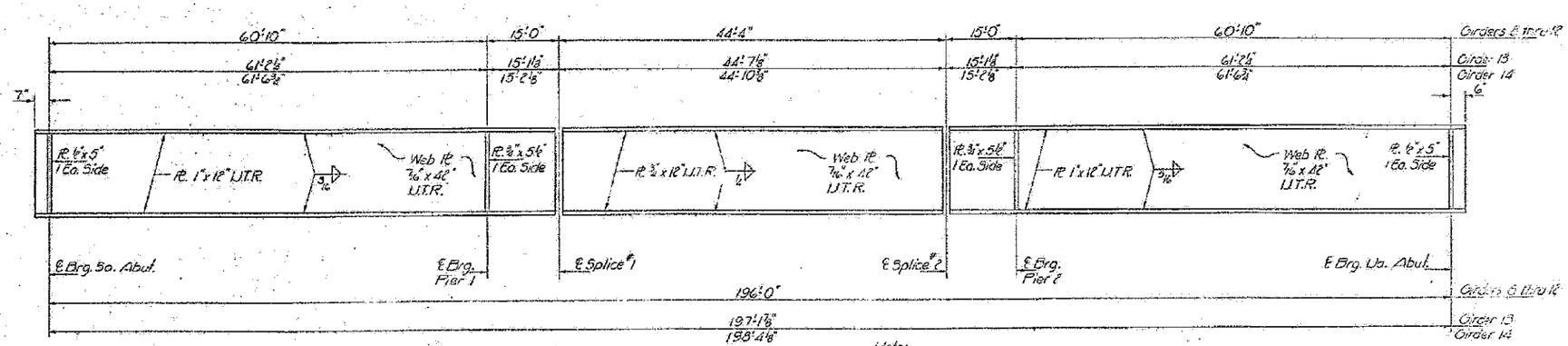

Note:
U.T.R. indicates Notch Toughness Requirement Zone 2; See General Notes Sh. #2.
Work this sheet with sheet #16

ELEVATION

ED			
ED			
J.D.			
ED			

May 2, 1978
EXAMINED
PASSED
APPROVED

FOR INFORMATION ONLY

EAST BOUND LANES
STRUCTURAL STEEL
FA RT 404 SEC 48-17B-3
KNOX COUNTY
STA. 893+82.00

DESIGNED JSB	EXAMINED Timothy A. Ahlright, ACTING ENGINEER OF STRUCTURAL SERVICES	DATE JANUARY 17, 2018	STATE OF ILLINOIS DEPARTMENT OF TRANSPORTATION
CHECKED SMR			
DRAWN daburdell	PASSED A. Carl Knoy, ENGINEER OF BRIDGES AND STRUCTURES	REVISED	
CHECKED JSB / SMR		REVISED	

STEEL DETAILS
SN 048-0077 (EB)
SHEET NO. 16 OF 18 SHEETS

F.A.P. RTE.	SECTION	COUNTY	TOTAL SHEETS	SHEET NO.
313	94(16, 17)RS, 48(17,18)RS	KNOX	118	105
		CONTRACT NO. 68339		
		ILLINOIS FED. AID PROJECT		

STATE OF ILLINOIS
DEPARTMENT OF TRANSPORTATION

SHEET NO. 16
17 SHEETS

PLATE NO.	REVISION	COUNTY	TOTAL SHEETS	SHEET NO.
		KNOX	118	106

INTERIOR GIRDER WEB PLATE TABLE				
		42012 650 B	[illegible]	[illegible]
I	in⁴	13300	[illegible]	10939
S	in³	672.5	[illegible]	502.5
t (128)	in	1.146	[illegible]	1.140
t (150)	in	348.4	[illegible]	344.1
[illegible]	in	5.71	[illegible]	5.68
[illegible]	in	145.0	[illegible]	339.8
[illegible]	in	114.7	[illegible]	[illegible]
[illegible]	in	309.7	[illegible]	[illegible]
[illegible]	in	10.30	[illegible]	[illegible]
[illegible]	in	[illegible]	[illegible]	[illegible]

INTERIOR GIRDER [illegible]			
[illegible]	[illegible]	34.45	[illegible]
[illegible]	[illegible]	[illegible]	[illegible]
[illegible]	[illegible]	[illegible]	[illegible]
[illegible]	[illegible]	[illegible]	[illegible]

I and S are the moment of inertia and section modulus of the steel section.

TOP OF WEB ELEVATIONS

[illegible]	[illegible]	[illegible]	[illegible]	[illegible]	[illegible]
[illegible]	144.94	[illegible]	[illegible]	145.88	[illegible]
[illegible]	144.93	[illegible]	[illegible]	145.28	[illegible]
144.98	145.11	[illegible]	145.43	145.57	[illegible]
[illegible]	145.20	[illegible]	145.30	145.63	[illegible]
145.47	[illegible]	[illegible]	[illegible]	[illegible]	[illegible]
[illegible]	[illegible]	[illegible]	[illegible]	[illegible]	[illegible]
145.52	145.52	[illegible]	[illegible]	[illegible]	[illegible]

*For fabrication only

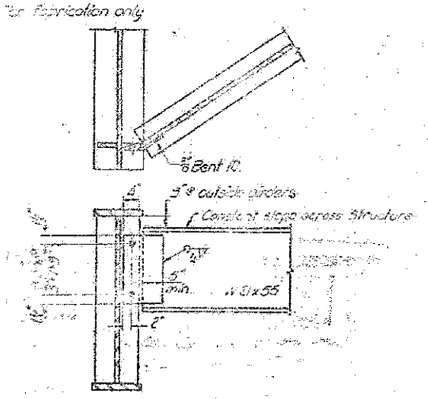

DIAPHRAGM D1
6 Required

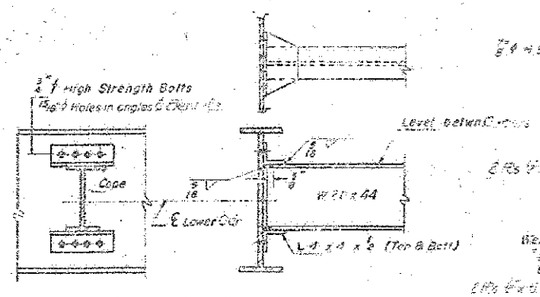

DIAPHRAGM D
46 Required

Note: Hardened washers shall be required over 15/16" ø holes in angles & Bent PLs.

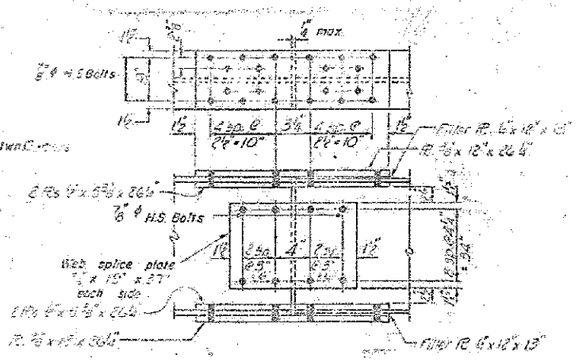

SPLICE

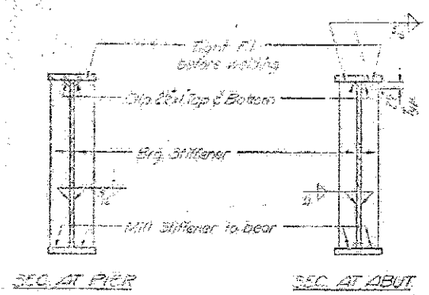

BRG. STIFFENERS

FOR INFORMATION ONLY

EAST BOUND LANES
STRUCTURAL STEEL DETAILS
FA RT. 404 SEC. 48-178-3
KNOX COUNTY
STA. A93+62.00

DESIGNED JSB	EXAMINED	DATE JANUARY 17, 2018	STATE OF ILLINOIS DEPARTMENT OF TRANSPORTATION
CHECKED SMR	ACTING ENGINEER OF STRUCTURAL SERVICES		
DRAWN daburdell	PASSED	REVISED	
CHECKED JSB / SMR	ENGINEER OF BRIDGES AND STRUCTURES	REVISED	

STEEL DETAILS
SN 048-0077 (EB)

SHEET NO. 17 OF 18 SHEETS

F.A.P. RTE.	SECTION	COUNTY	TOTAL SHEETS	SHEET NO.
313	94(16, 17)RS, 48(17,18)RS	KNOX	118	106

CONTRACT NO. 68339

ILLINOIS FED. AID PROJECT

STATE OF ILLINOIS
DEPARTMENT OF TRANSPORTATION

SHEET NO. 17
27 SHEETS

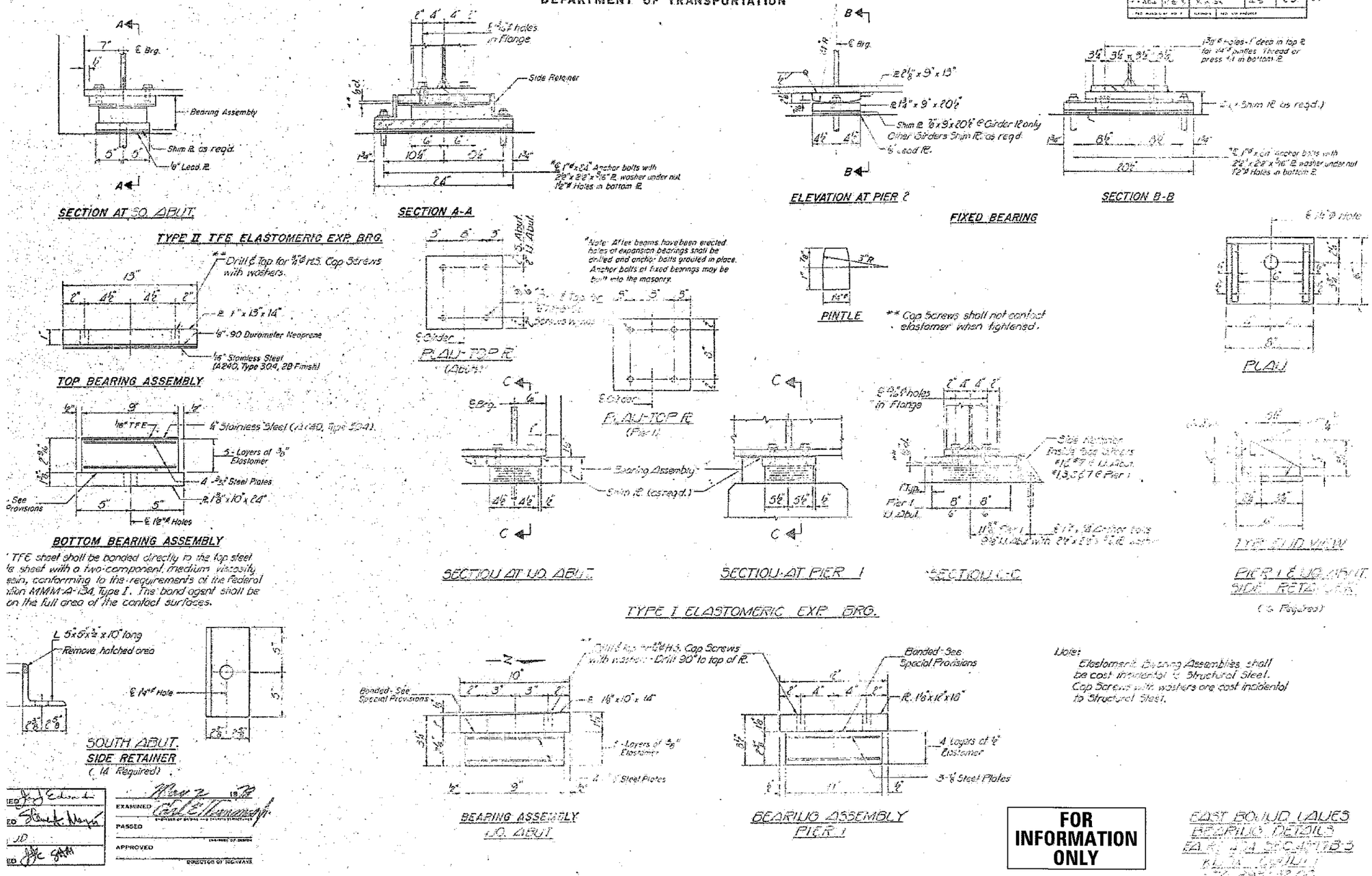

DESIGNED JSB	EXAMINED	ACTING ENGINEER OF STRUCTURAL SERVICES	DATE JANUARY 17, 2018	STATE OF ILLINOIS DEPARTMENT OF TRANSPORTATION	STEEL DETAILS SN 048-0077 (EB)	F.A.P. RTE. 313	SECTION 9406, 17BRS, 48U7,18BRS	COUNTY KNOX	TOTAL SHEETS 118	SHEET NO. 107
CHECKED SMR	PASSED	ENGINEER OF BRIDGES AND STRUCTURES	REVISED		SHEET NO. 18 OF 18 SHEETS			CONTRACT NO. 68339		
DRAWN daburdell			REVISED					ILLINOIS FED. AID PROJECT		
CHECKED JSB / SMR										

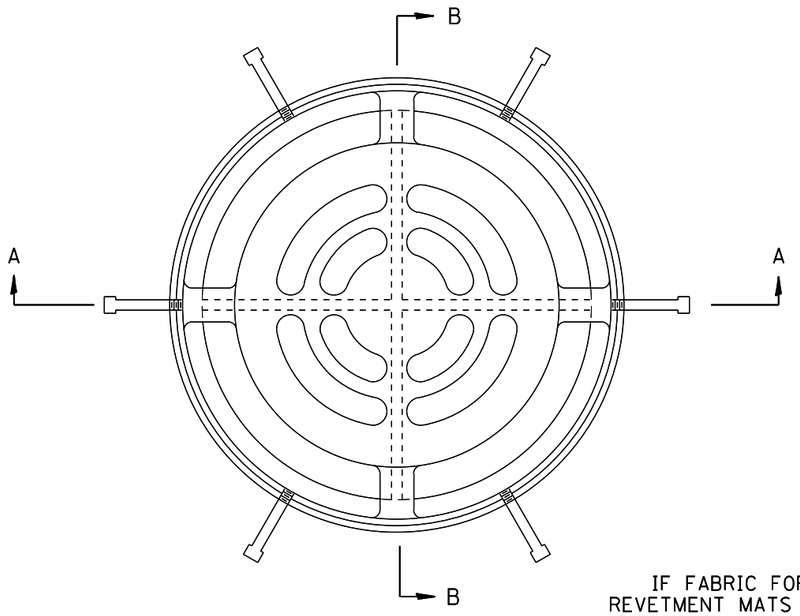

PLAN
(STD# 604101 & 604106)

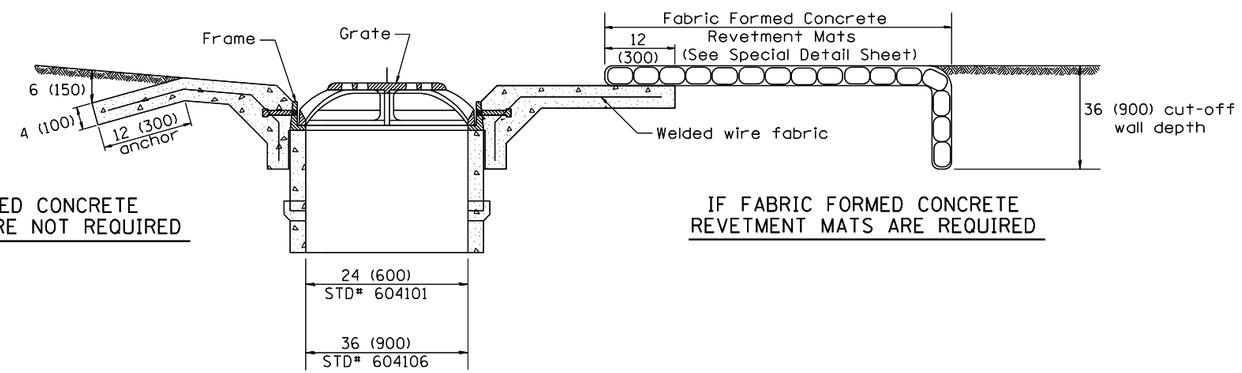

SECTION B-B
(STD# 604101 & 604106)

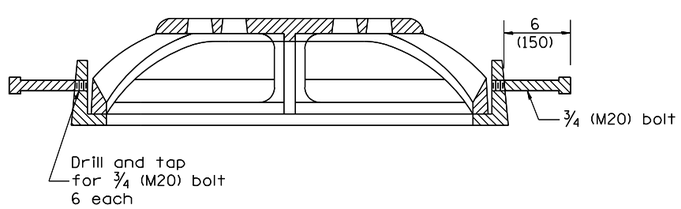

SECTION A-A
(STD# 604101 & 604106)

GENERAL NOTES

1. The applicable portions of Highway Standards 604101 and/or 604106 shall apply, except as noted herin.

All dimensions are in inches (millimeters) unless otherwise noted.

01-01-97	RENUM. B-4.09, NEW REVISION BOX, REVISED	T.P.	
	DESIGNER NOTES		
10-16-06	REVISED TO 2007 SPEC.	M.A.	

STATE OF ILLINOIS
DEPARTMENT OF TRANSPORTATION

MEDIA INLET (604101), SPECIAL AND
MEDIA INLET (604106), SPECIAL

NOT TO SCALE

CADD STD. 604101-D4

FAP	SECTION	COUNTY	TOTAL SHEETS	SHEET NO.
313	94(16,16-1,17)RS,48(17,18)RS	Warren/Knox	118	108
RTE US 34/IL 110		CONTRACT NO. 68339		
FED. ROAD DIST. NO.	ILLINOIS	FED. AID PROJECT		

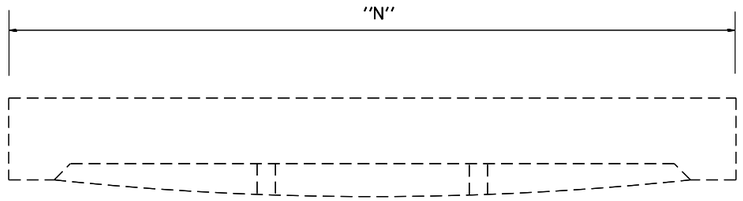

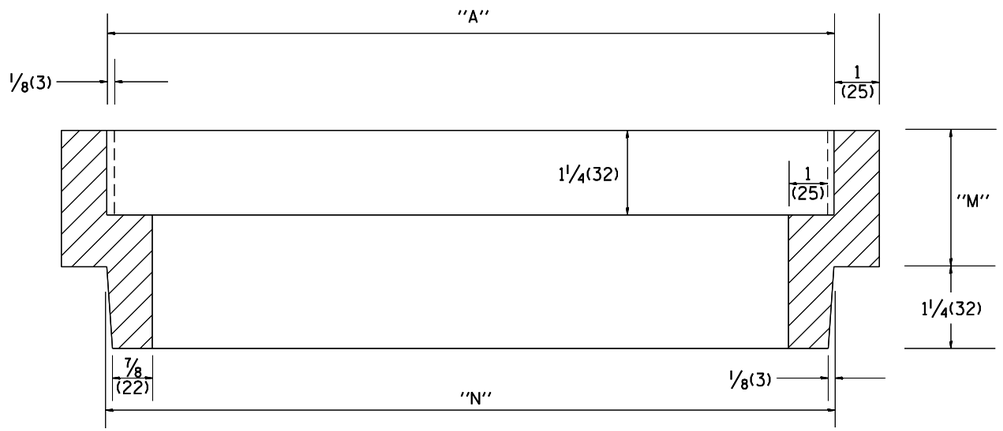

Station	Dimension inches (millimeters)			
	"A"	"N"	"M"	Quantity
			Total	

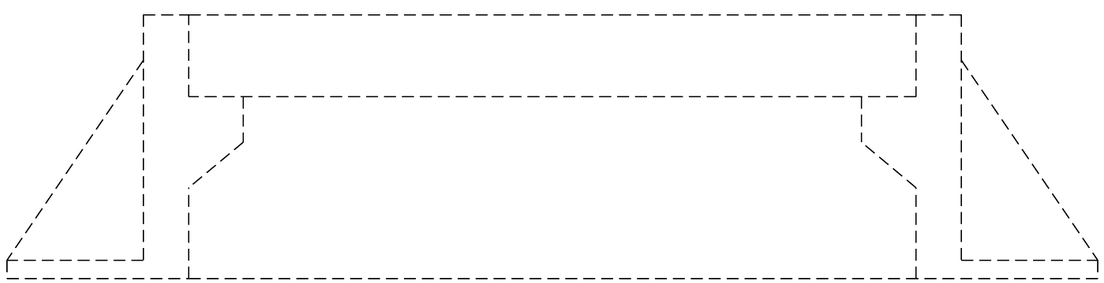

General Notes:

1. Article 603.08 shall apply

All dimensions are in inches (millimeters) unless otherwise noted.

01-01-97	RENUM. B-6.01, NEW REVISION BOX	T.P.
10-16-06	REVISED TO 2007 SPEC.	M.A.

STATE OF ILLINOIS
DEPARTMENT OF TRANSPORTATION

FRAME & GRATE ADJUSTING RING

NOT TO SCALE

CADD STD. 604201-D4

FAP	SECTION	COUNTY	TOTAL SHEETS	SHEET NO.
313	94(16,16-1,17)RS,48(17,18)RS	Warren/Knox	118	109
RTE US 34/IL 110		CONTRACT NO. 68339		
FED. ROAD DIST. NO.	ILLINOIS	FED. AID PROJECT		

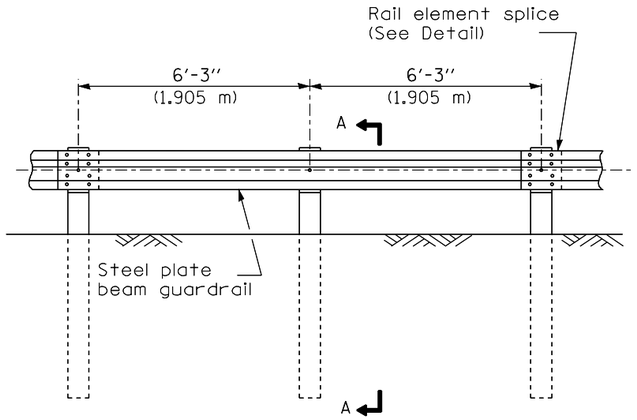

ELEVATION

TYPE A

6'-3" (1.905 m) Typical post spacing

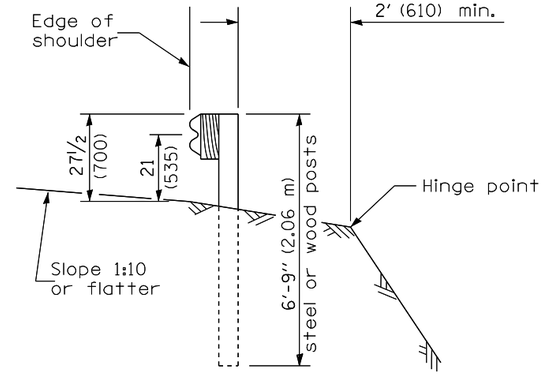

SECTION A-A

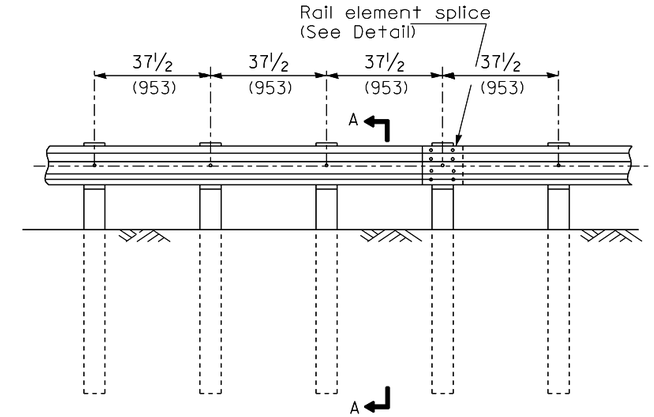

ELEVATION

TYPE B

37½ (953) Closed post spacing

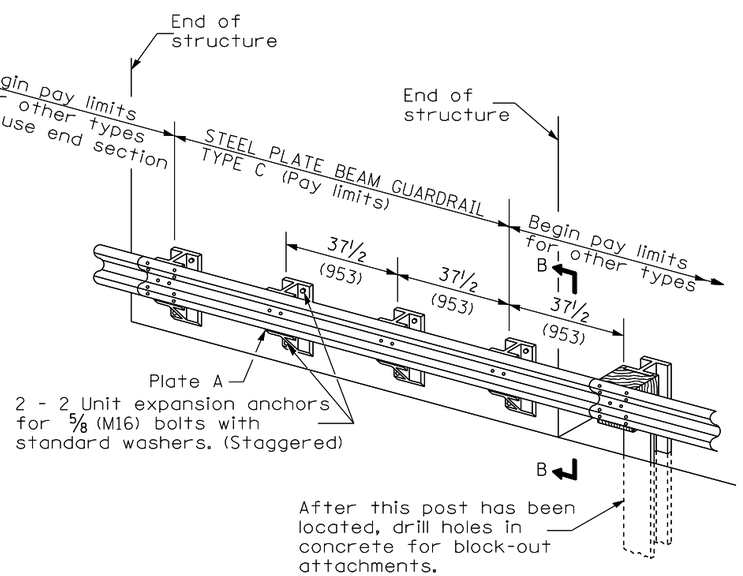

TYPE C

37½ (953) Block-out spacing

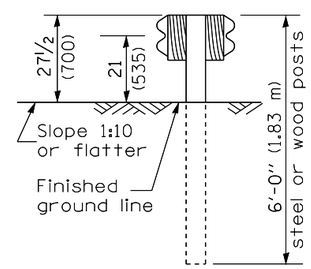

SECTION C-C

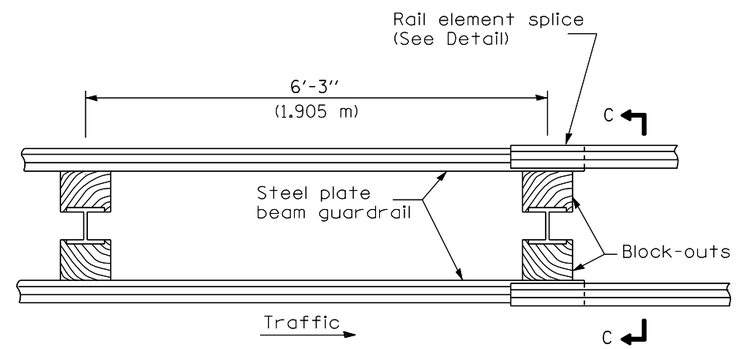

PLAN

TYPE D

Double steel plate beam guardrail
6'-3" (1.905 m) typical post spacing

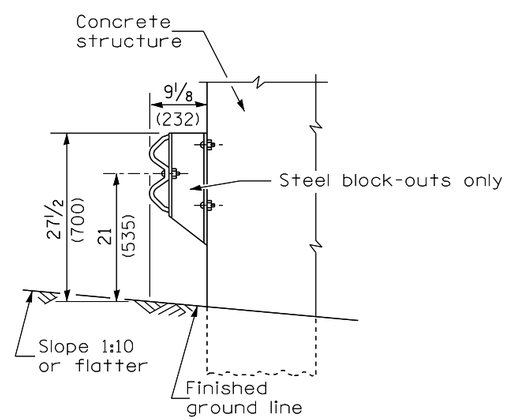

SECTION B-B

GENERAL NOTES

All slope ratios are expressed as units of vertical displacement to units of horizontal displacement (V:H).

All dimensions are in millimeters (inches) unless otherwise shown.

The existing steel posts may be drilled to match the bolt pattern shown herein for the wood block-out, or a new steel post shall be provided.

This detail is applicable to the guardrail system used prior to January 1, 2007. For details on the Midwest Guardrail System, see Standard 630001.

All dimensions are in inches (millimeters) unless otherwise noted.

03-01-07	NEW DETAIL	RJD
03-07-11	Revised designer note	RJD

STATE OF ILLINOIS
DEPARTMENT OF TRANSPORTATION

STEEL PLATE BEAM GUARDRAIL, TYPE A,
6.75 FOOT POSTS

NOT TO SCALE

SHT. 1 OF 4
CADD STD. 630011-D4

FAP	SECTION	COUNTY	TOTAL SHEETS	SHEET NO.
313	94(16,16-1,17)RS,48(17,18)RS	Warren/Knox	118	110
RTE US 34/IL 110		CONTRACT NO. 68339		
FED. ROAD DIST. NO.	ILLINOIS	FED. AID PROJECT		

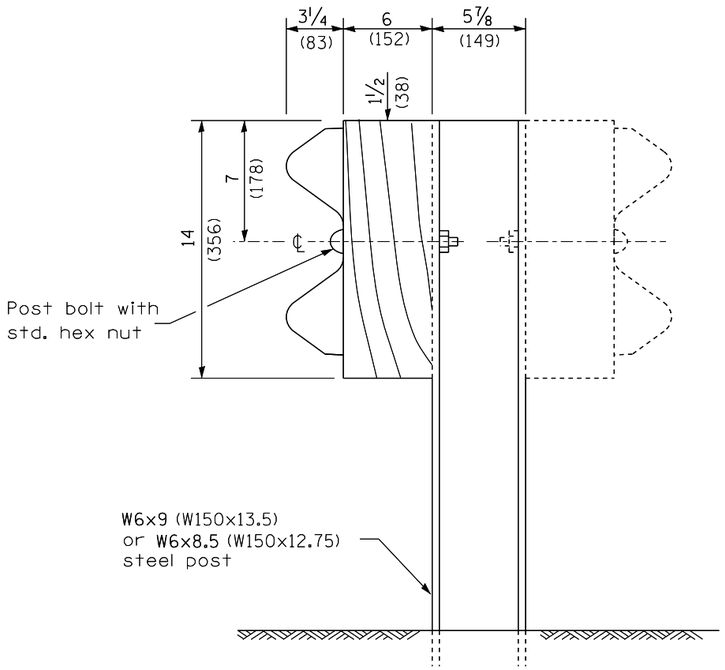

STEEL POST CONSTRUCTION

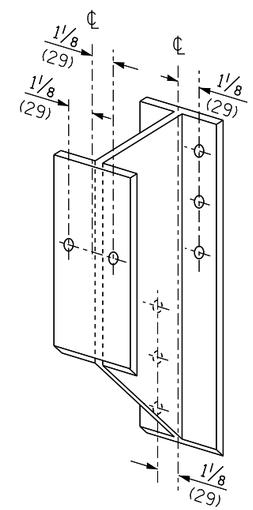

STEEL BLOCK-OUT DETAIL

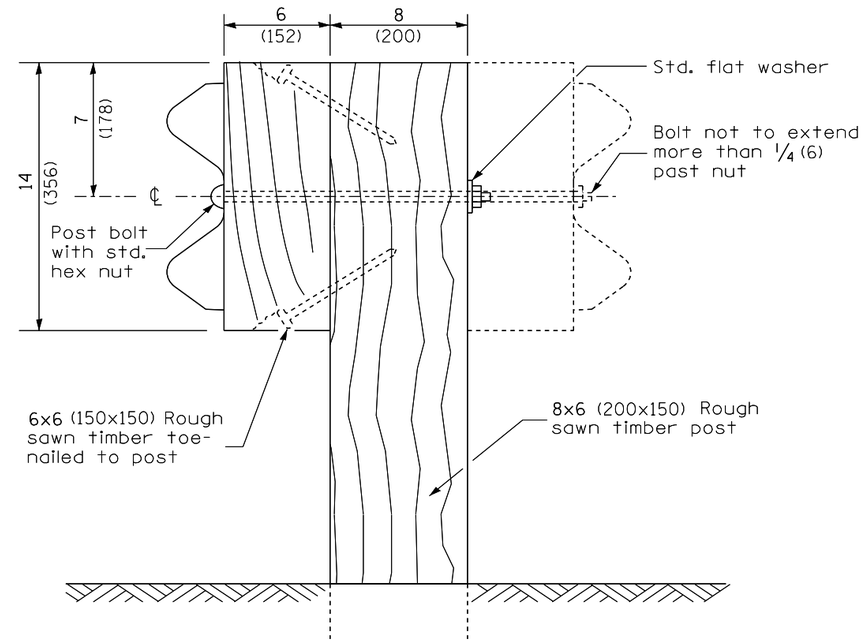

WOOD POST CONSTRUCTION

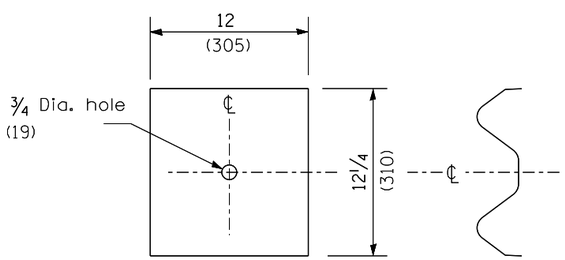

NOTE

Plate A shall be placed between rail element and block-out at non-splice mounting points only when steel block-outs are used.

PLATE A

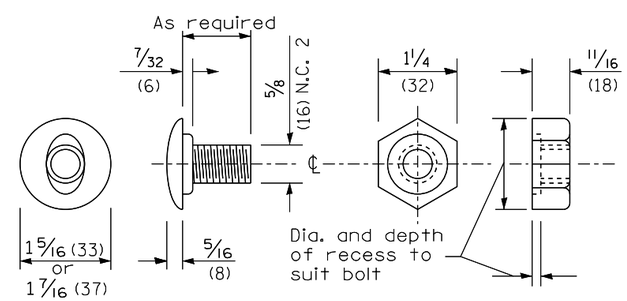

POST OR SPLICE BOLT & NUT

All dimensions are in inches (millimeters) unless otherwise noted.

STATE OF ILLINOIS
DEPARTMENT OF TRANSPORTATION

NOT TO SCALE

STEEL PLATE BEAM GUARDRAIL, TYPE A,
6.75 FOOT POSTS

SHT. 2 OF 4
CADD STD. 630011-D4

FAP	SECTION	COUNTY	TOTAL SHEETS	SHEET NO.
313	94(16,16-1,17)RS,48(17,18)RS	Warren/Knox	118	111
RTE US 34/IL 110		CONTRACT NO. 68339		
FED. ROAD DIST. NO.	ILLINOIS	FED. AID PROJECT		

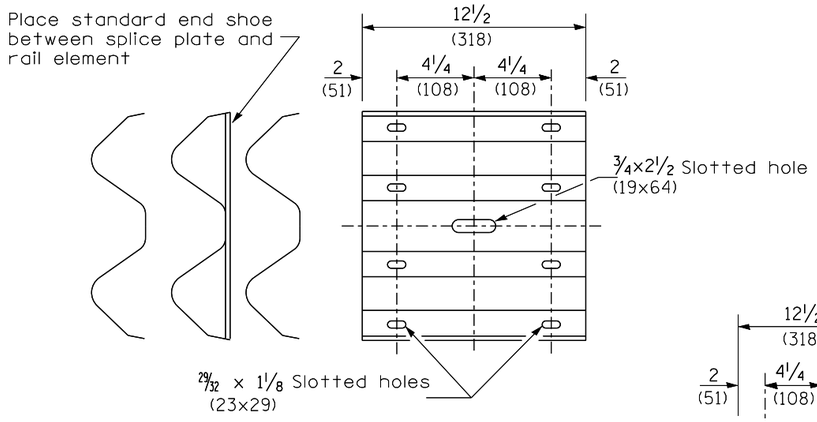

SPLICE PLATE

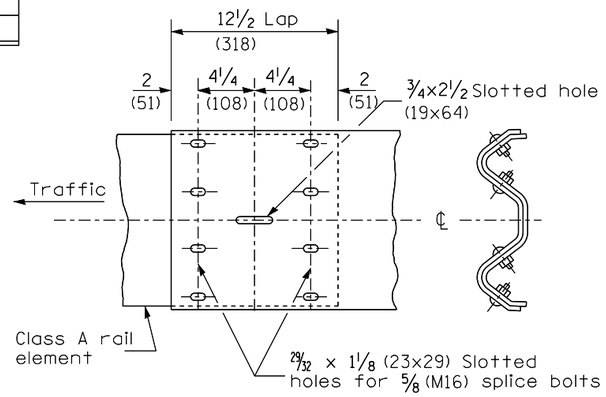

RAIL ELEMENT SPLICE

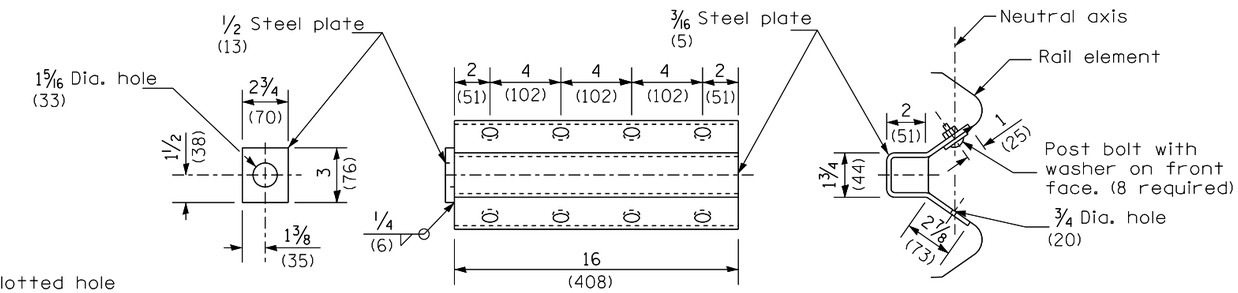

NOTE

Anchor plate T shall be used to attach cable assembly to guardrail when required on traffic barrier terminals.

ANCHOR PLATE T DETAILS

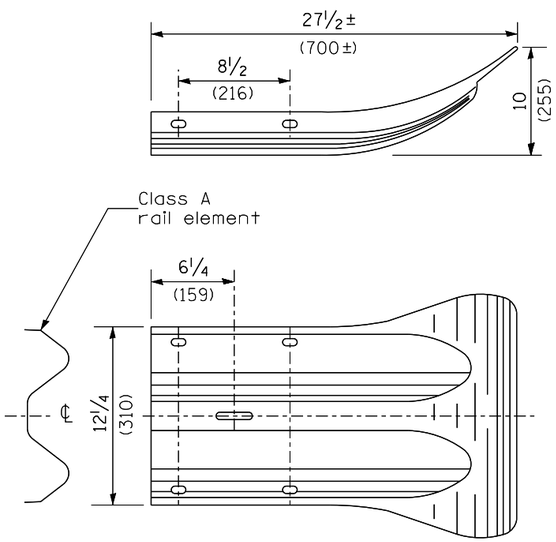

END SECTION

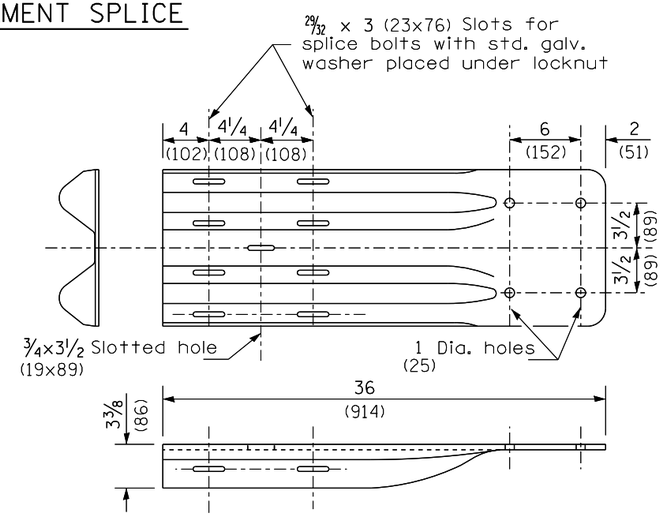

NOTE

When end shoe is attached to a bridge parapet which has an expansion joint, the bolts shall be provided with a locknut or double nut and shall be tightened only to a point that will allow guardrail movement.

The standard end shoe shall be attached to the concrete with pre-drilled or self-drilling anchor bolts. The anchor cone shall be set flush with the surface of the concrete.

Externally threaded studs protruding from the surface of the concrete will not be permitted.

END SHOE

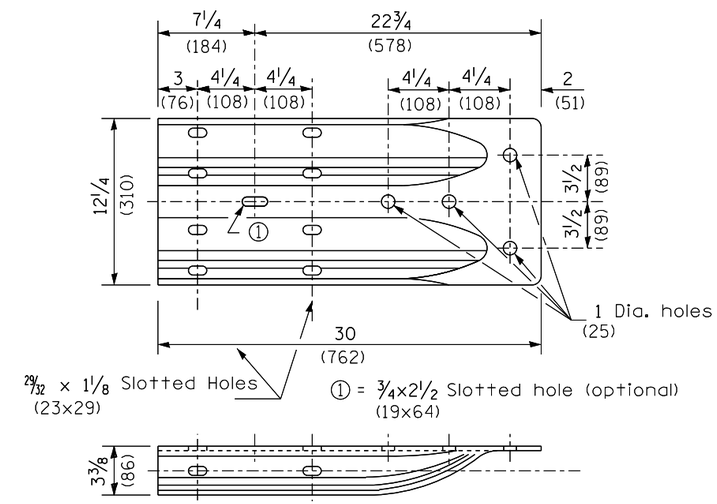

ALTERNATE END SHOE

All dimensions are in inches (millimeters) unless otherwise noted.

STATE OF ILLINOIS
DEPARTMENT OF TRANSPORTATION

NOT TO SCALE

STEEL PLATE BEAM GUARDRAIL, TYPE A, 6.75 FOOT POSTS

SHT. 3 OF 4
CADD STD. 630011-D4

FAP	SECTION	COUNTY	TOTAL SHEETS	SHEET NO.
313	94(16,16-1,17)RS,48(17,18)RS	Warren/Knox	118	112
RTE US 34/IL 110		CONTRACT NO. 68339		
FED. ROAD DIST. NO.	ILLINOIS	FED. AID PROJECT		

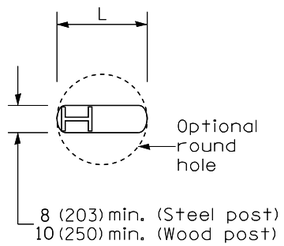

PLAN

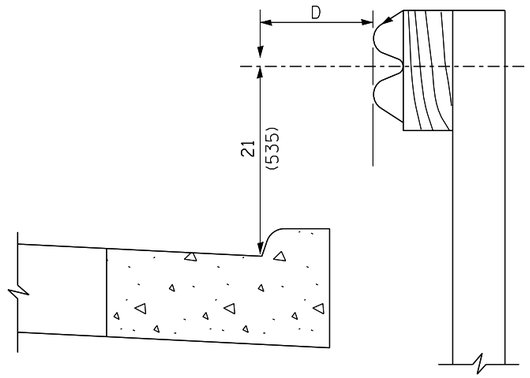

Note:
If it is necessary for D to be more than 12 (300) and less than 10'-0" (3.0 m) type M-2 (M-5) curb and gutter (Std. 606001) shall be used in front of and in advance of the guardrail.

GUARDRAIL PLACED BEHIND CURB

(D = 0 desirable to 12 (300) maximum)

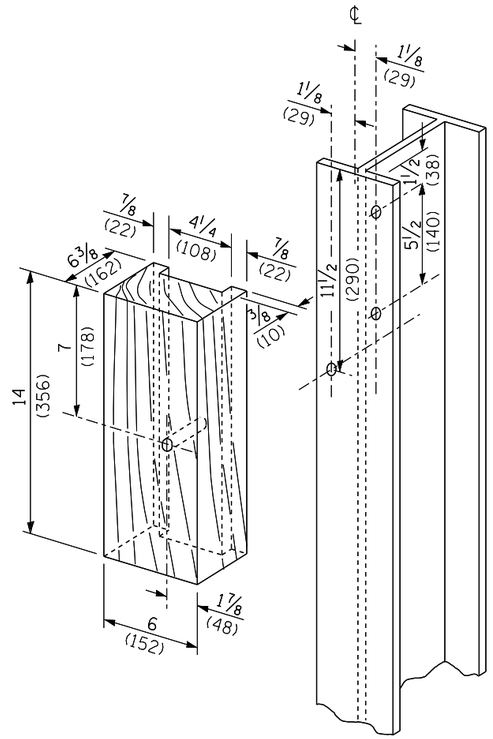

WOOD BLOCK-OUT AND STEEL POST DETAILS

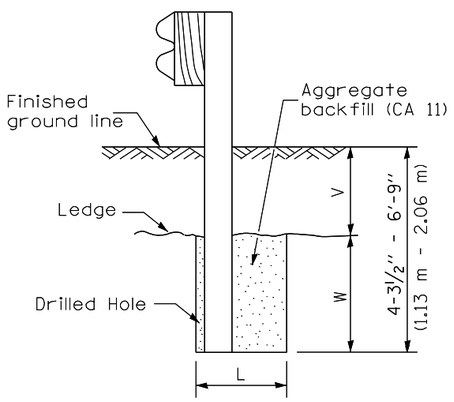

Note:
Ledge line is top of rock ledge or hard slag fill.

ELEVATION

FOOTING FOR POST WHEN IMPERVIOUS MATERIAL IS ENCOUNTERED

V	W	L	
		Steel Post	Wood Post
0 - 18 (0 - 460)	24 (610)	21 (530)	23 (580)
>18 - 41.5 (>460 - 825)	12 (305)	8 (203)	10 (250)
>41.5 - 53.5 (>825 - 1.13 m)	12 - 0 (305 - 0)	8 (203)	10 (250)

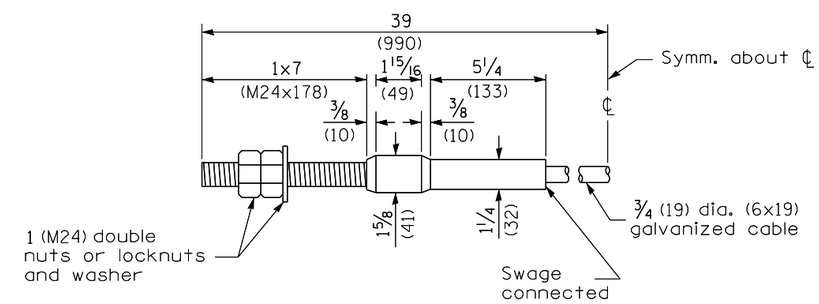

CABLE ASSEMBLY

(18,100 kg (40,000 lbs.) min. breaking strength)
Tighten to taut tension.

All dimensions are in inches (millimeters) unless otherwise noted.

STATE OF ILLINOIS
DEPARTMENT OF TRANSPORTATION

STEEL PLATE BEAM GUARDRAIL, TYPE A, 6.75 FOOT POSTS

NOT TO SCALE

SHT. 4 OF 4
CADD STD. 630011-D4

FAP	SECTION	COUNTY	TOTAL SHEETS	SHEET NO.
313	94(16,16-1,17)RS,48(17,18)RS	Warren/Knox	118	113
RTE US 34/IL 110		CONTRACT NO. 68339		
FED. ROAD DIST. NO.	ILLINOIS	FED. AID PROJECT		

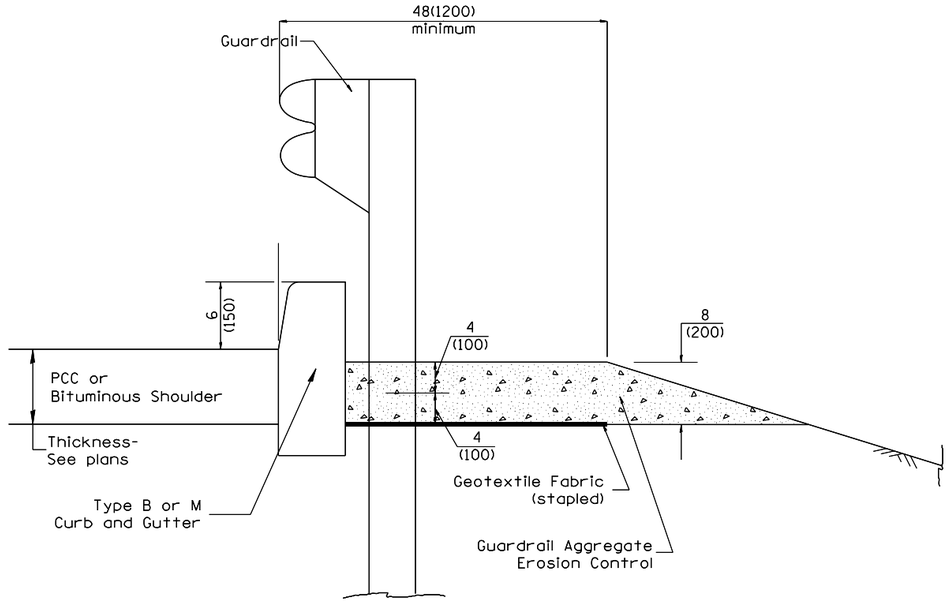

TYPICAL SECTION WITH EROSION CONTROL CURB

GENERAL NOTES: GUARDRAIL AGGREGATE EROSION CONTROL

1. This work shall consist of grading as needed, furnishing and installing geotextile fabric and staples, and furnishing, placing and shaping crushed aggregate around and behind Steel Plate Beam Guardrail posts in accordance with Plan Details.

2. Before placing the aggregate and the Geotextile Fabric, weeds and grass shall be removed from the area to be covered.

3. After the area has been prepared, and in a dry condition, the Geotextile fabric shall be placed with a 12(300) minimum overlap. A knife cut for guardrail post installation is necessary.

4. The aggregate shall be deposited, compacted and shaped by either mechanical or hand methods, in a manner reasonably true to line and grade.

5. The Contractor shall have the option of placing the guardrail before or after the Geotextile Fabric and Aggregate are in place. If the guardrail is placed after the Geotextile Fabric and Aggregate, then any voids must be filled and the aggregate returned to line and grade.

6. Materials shall meet the following requirements:

A. The crushed aggregate shall be CA1 gradation in accordance with Article 1004.01(c) of the Standard Specifications.

B. The Geotextile Fabric shall be nonwoven fabric in accordance with Article 1080.02 of the Standard Specifications.

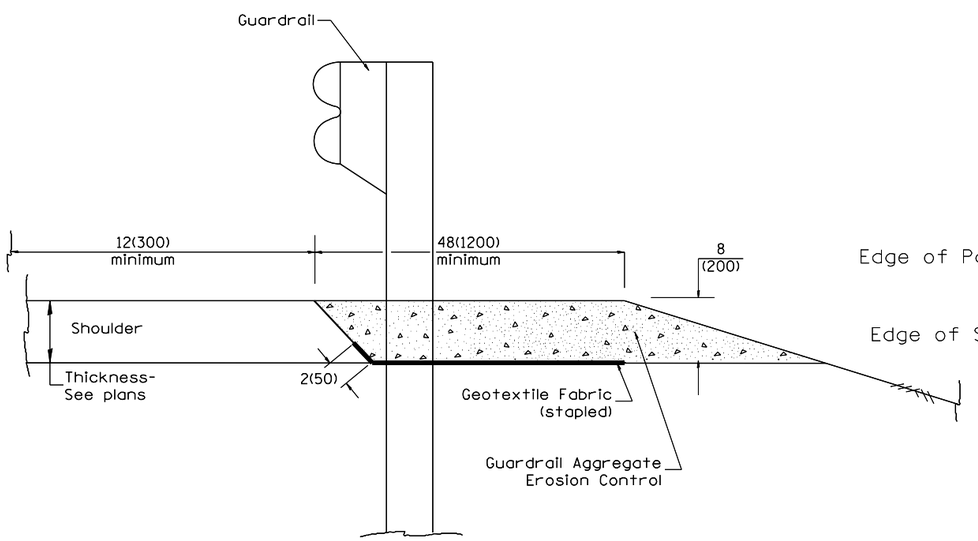

TYPICAL SECTION WITHOUT EROSION CONTROL CURB

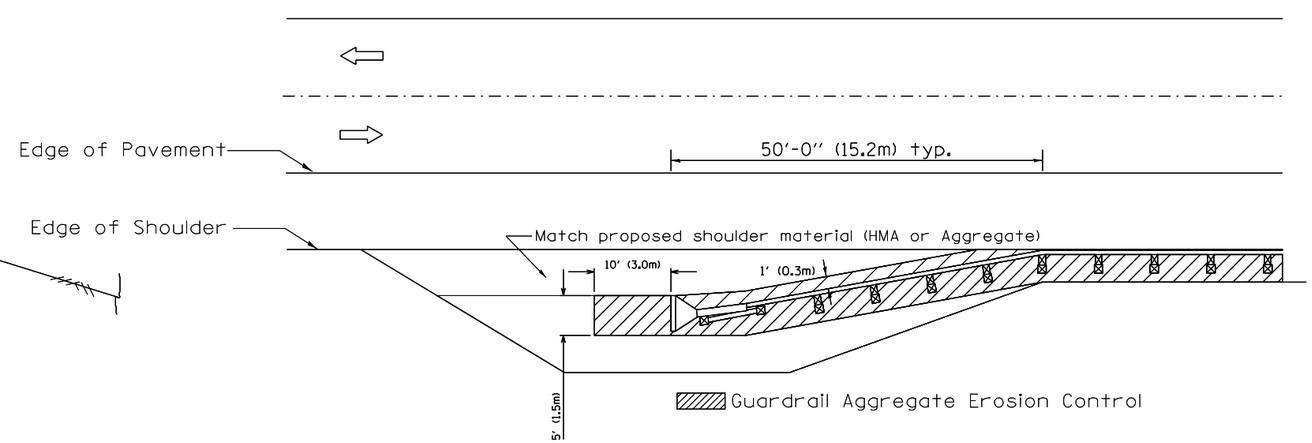

All dimensions are in inches (millimeters) unless otherwise noted.

01-01-97	RENUM. C-22.01, NEW REVISION BOX	T.P.	03-07-11	ADDED DETAIL SHOWING PLAN VIEW	R.D.
03-01-97	CORRECT STD. NUMBERS IN NOTES PG. 2	J.A.	08-10-12	REVISED CURB "B" AND AGGREGATE	R.D.
11-03-00	CORRECTION TO NOTES	M.A.	07-15-15	ADDRESSED SHOULDER INLET CURB	R.D.
10-16-06	REVISED TO 2007 SPEC.	M.A.	01-26-17	REVISED	R.D.

STATE OF ILLINOIS
DEPARTMENT OF TRANSPORTATION

GUARDRAIL EROSION CONTROL TREATMENTS

NOT TO SCALE

SHT. 1 OF 2
CADD STD. 630101-D4

FAP	SECTION	COUNTY	TOTAL SHEETS	SHEET NO.
313	94(16,16-1,17)RS,48(17,18)RS	Warren/Knox	118	114
RTE US 34/IL 110		CONTRACT NO. 68339		
FED. ROAD DIST. NO.	ILLINOIS	FED. AID PROJECT		

DETAIL "A"

#4 reinforcement bars may be cast in PCC apron and precast inlet box or drilled and anchored with an apporoved chemical adhesive at 2' spacing. Cost of curb and reinforcement are included in the cost of shoulder inlet.

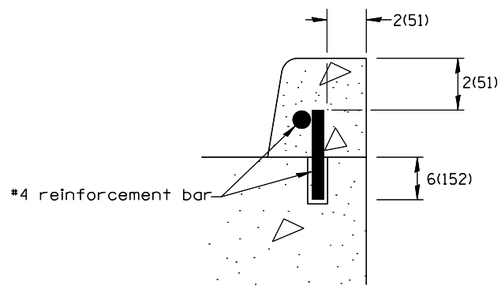

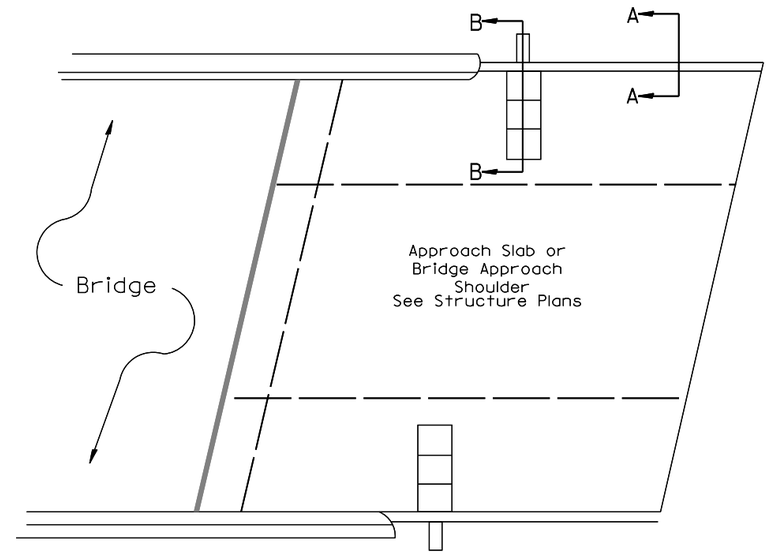

PLAN VIEW

APPROACH SLAB OR SHOULDER PLACEMENT

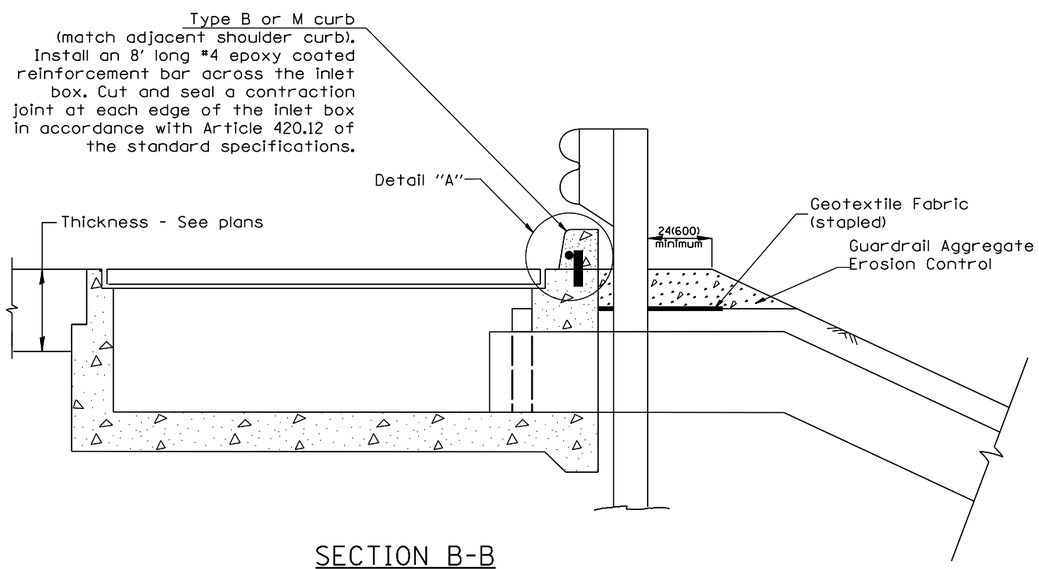

SECTION B-B

TYPICAL SECTION AT INLETS

TYPE E, F & G (HIGHWAY STANDARD 610001)

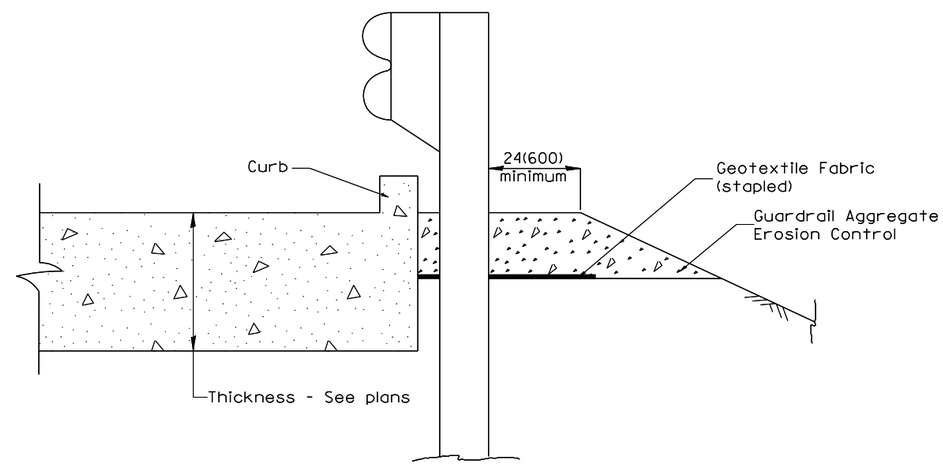

SECTION A-A

TYPICAL SECTION WITH BRIDGE APPROACH CURB

All dimensions are in inches (millimeters) unless otherwise noted.

STATE OF ILLINOIS
DEPARTMENT OF TRANSPORTATION

GUARDRAIL EROSION CONTROL TREATMENTS

NOT TO SCALE

SHT. 2 OF 2
CADD STD. 630101-D4

FAP	SECTION	COUNTY	TOTAL SHEETS	SHEET NO.
313	94(16,16-1,17)RS,48(17,18)RS	Warren/Knox	118	115
RTE US 34/IL 110		CONTRACT NO. 68339		
FED. ROAD DIST. NO.	ILLINOIS	FED. AID PROJECT		

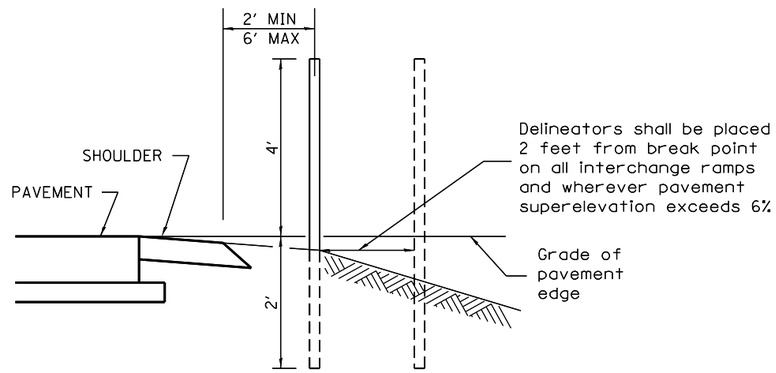

SECTIONAL VIEW

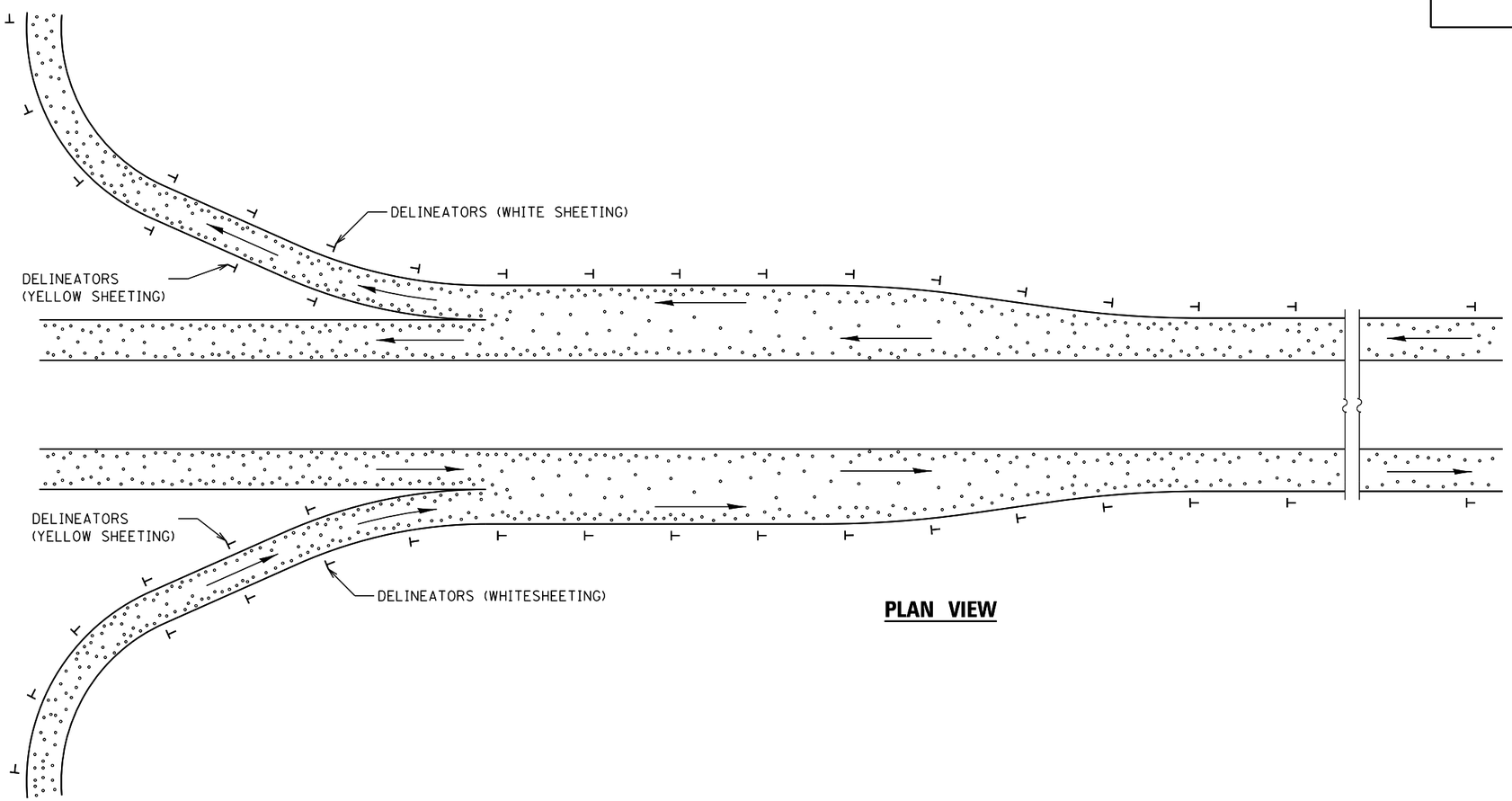

PLAN VIEW

SPACING FOR RECOVERABLEDELINEATORS ON HORIZONTAL CURVES

LOCATION	RADIUS OF CURVE (FEET)	SPACING ON CURVE (FEET)

GENERAL NOTES

Delineators on mainline shall be placed at 400' spacing on tangent sections, and 200' spacing on curved sections.

Delineators on ramps, shall be placed as follows:
1. On tangent sections, acceleration lanes and deceleration lanes at maximum spacing of 100'.
2. On outside of all curved sections.
(See table above for spacing)

08-25-15	NEW STANDARD	R.D.			

STATE OF ILLINOIS
DEPARTMENT OF TRANSPORTATION

RECOVERABLE DELINEATORS DETAIL

NOT TO SCALE

CADD STD. 635002-D4

F.A.P RTE.	SECTION	COUNTY	TOTAL SHEETS	SHEET NO.
313	94(16,16-1,17)RS,48(17,18)RS	Warren/Knox	118	116
RTE US 34/IL 110		CONTRACT NO. 68339		
FED. ROAD DIST. NO.	ILLINOIS	FED. AID PROJECT		

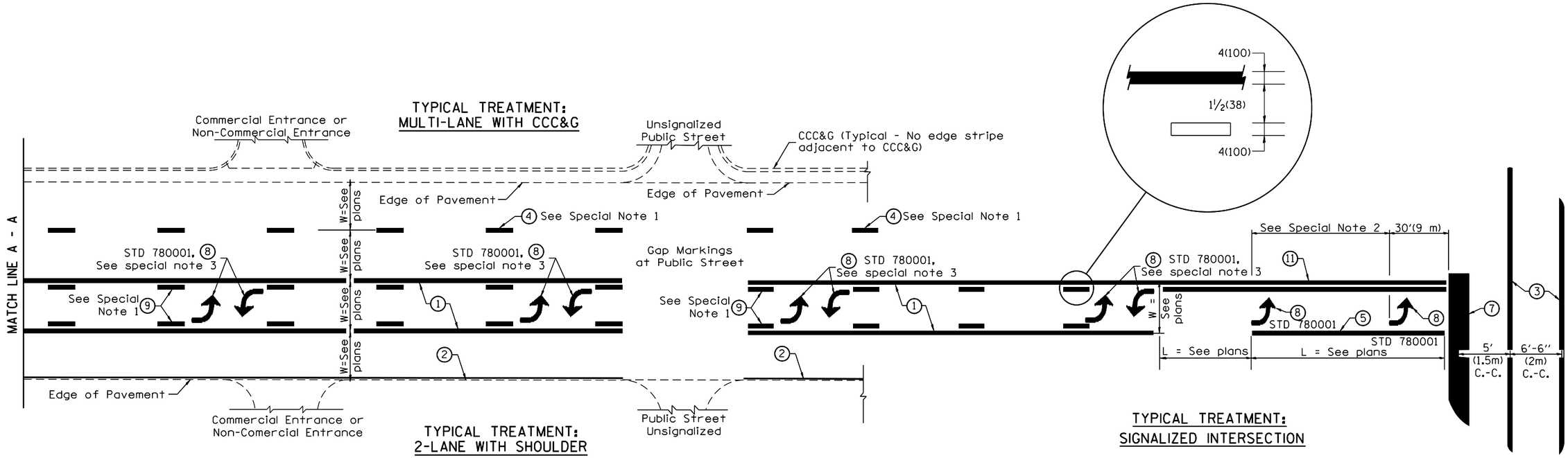

FLUSH PAVED MEDIAN: TWO-WAY LEFT TURN LANE WITH ONE-WAY LEFT TURN LANE AT SIGNALIZED INTERSECTION

TYPICAL PAVEMENT MARKING LEGEND

(Note: This is a District Standard Legend.
Some elements may not apply to specific project.)

1. 4(100) Solid (Yellow)
2. 4(100) Solid (White)
3. 2-6(150) Crosswalk @ 6'-6" (2m)min C.-C. (White)
   2-8(200) Crosswalk @ 6'-6" (2m)min C.-C. (White) (When traffic signals are present.)
4. 6(150) Skip-Dash (White) — 10' (3.05m) / 30' (9.14m) / 10' (3.05m) (See Special Note 1)
5. 8(200) Solid (White)
6. 12(300) Diagonal (White) (Item 6 is shown on Std. 780001)
7. 24(600) Stop Bar (White)
8. Letters & Arrows — 33' (10m) (See Std. 780001 and Special Notes 2 & 3)
9. 4(100) Skip-Dash (Yellow) — 10' (3.05m) / 30' (9.14m) / 10' (3.05m) (See Special Note 1)
10. 12(300) Diagonal (Yellow) (See Table A)
11. 4(100) Double Solid (Yellow) — 11(280) C.-C. — See Table A — 45°

SPECIAL NOTES

1. Skip-Dash markings will be centered between both ends of city blocks and shall be placed in alignment transversly across the pavement.
2. The following shall apply to arrows located in one-way left turn lanes:
   A. A minimum of two (2) arrows is required.
   B. The maximum spacing between arrows is 80' (24 m).
   C. Arrows shall be evenly spaced if three (3) or more are required.
3. The following shall apply to arrow pairs located in two-way left turn lanes:
   A. A minimum of two (2) arrow pairs is required.
   B. The maximum spacing between arrow pairs is 200' (61 m).
   C. Arrow pairs shall be evenly spaced if three (3) or more are required.
   D. The spacing between Bi Directional Left Turn Arrows is 33' (10 m).

GENERAL NOTES

1. Refer to State Standard 780001 for additional Pavement Markings including letters & arrows.
2. See Plans for Pavement Markings adjacent to curbed islands and medians, and through lane reductions.
3. Refer to Article 780.13 for letter, number and symbol areas (sq. ft.)
4. Areas are grooved 1" beyond each edge for the following symbols:
   Through Arrow= 14.8 sq. ft.
   Large Left or Right Arrow= 21.9 sq. ft.
   2 Arrow Combination Left (or Right) and Through= 34.9 sq. ft.
   Wrong Way Arrow= 29.5 sq. ft.
   Railroad Crossing Symbol= 69.8 sq. ft.
   (For further information, refer to BDE Special Provision: Grooving for Recessed Pavement Markings)

01-01-97	RENUM. F-8.03, NEW REVISION BOX	T.P.	10-16-06	REVISED TO 2007 SPEC.		
02-07-97	ADD BI DIRECTIONAL DIMENSION	J.A.	2/29/16	ADDED GROOVING AREAS	R.D.	
10-97	CORRECT BI DIRECTIONAL DIMENSION	J.A.				
08-02	ADD CROSSWALK DMNS. WITH T.S.	M.A.				

STATE OF ILLINOIS
DEPARTMENT OF TRANSPORTATION

TYPICAL PAVEMENT MARKINGS

NOT TO SCALE

SHT. 1 OF 2
CADD STD. 780001-D4

FAP	SECTION	COUNTY	TOTAL SHEETS	SHEET NO.
313	94(16,16-1,17)RS,48(17,18)RS	Warren/Knox	118	117
RTE US 34/IL 110		CONTRACT NO. 68339		
FED. ROAD DIST. NO.	ILLINOIS	FED. AID PROJECT		

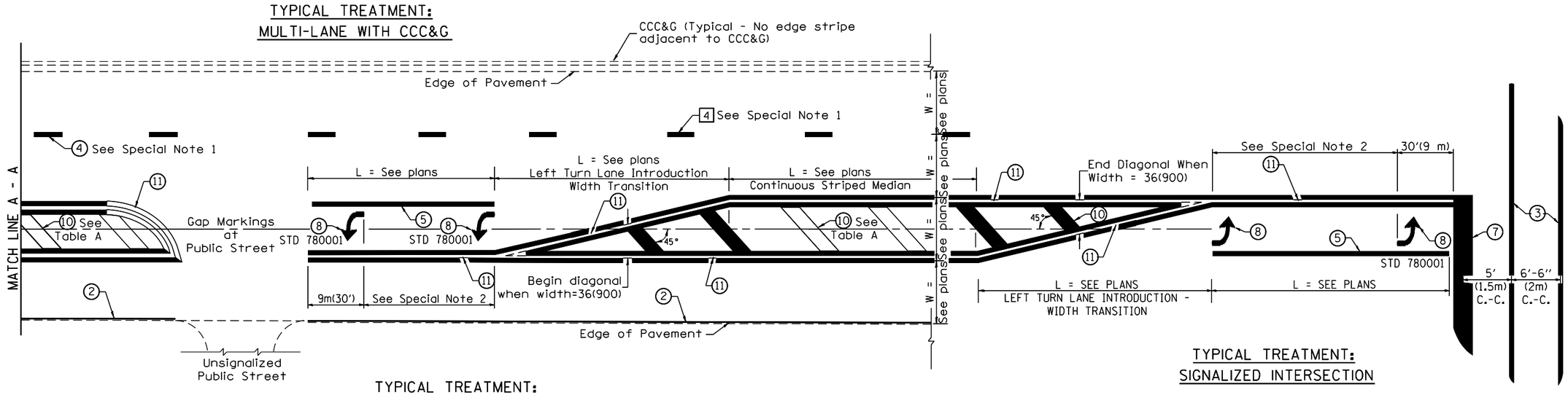

FLUSH PAVED MEDIAN: RESTRICTED LEFT TURN LANE

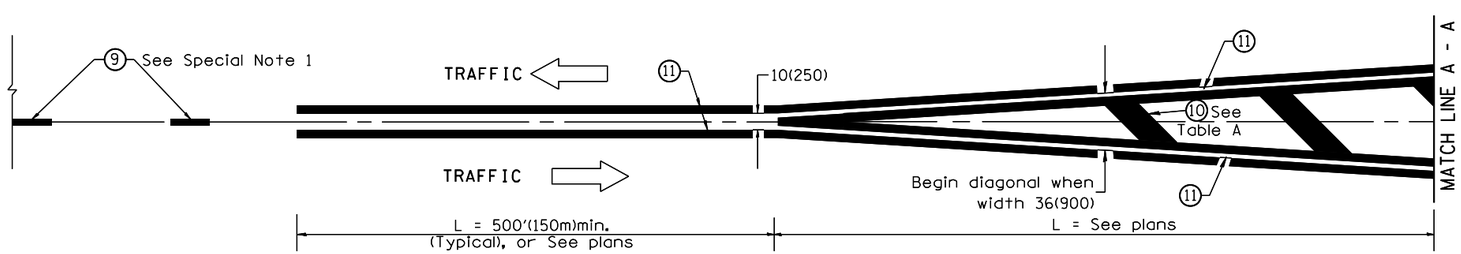

MEDIAN INTRODUCTION - WIDTH TRANSITIONS

TABLE A

RECOMMENDED SPACING BETWEEN DIAGONAL LINES

SPEED LIMIT RANGE	CONTINUOUS	INTERSECTION CHANNELIZATION (Includes Width Transitions for Median and Left Turn Lane Introductions)
Less Than 30 mph (50 km/h)	50' (15m)	15' (5m)
30 - 45 mph (50 - 70 km/h)	75' (23m)	20' (6m)
Over 45 mph (70 km/h)	150' (46m)	30' (9m)

All dimensions are in inches (millimeters) unless otherwise noted.

STATE OF ILLINOIS
DEPARTMENT OF TRANSPORTATION

TYPICAL PAVEMENT MARKINGS

NOT TO SCALE

SHT. 2 OF 2
CADD STD. 780001-D4

FAP	SECTION	COUNTY	TOTAL SHEETS	SHEET NO.
313	94(16,16-1,17)RS,48(17,18)RS	Warren/Knox	118	118
RTE US 34/IL 110		CONTRACT NO. 68339		
FED. ROAD DIST. NO.	ILLINOIS	FED. AID PROJECT		