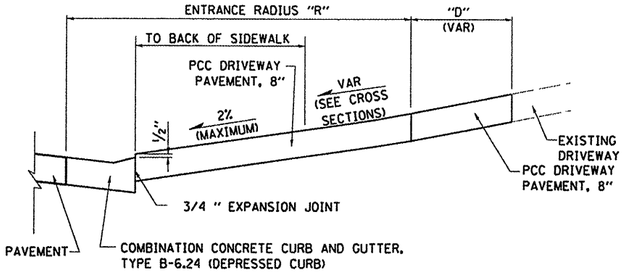

SECTION A-A

(NOT TO SCALE)

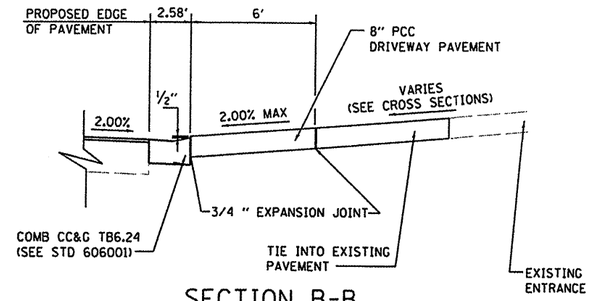

SECTION B-B

(NOT TO SCALE)

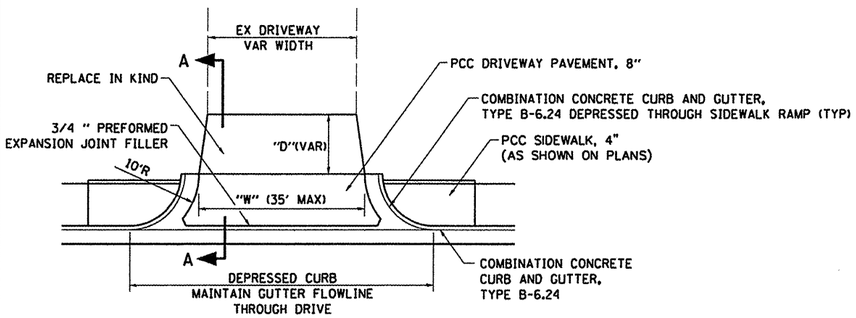

TYPICAL COMMERCIAL ENTRANCE DETAIL

(NOT TO SCALE)

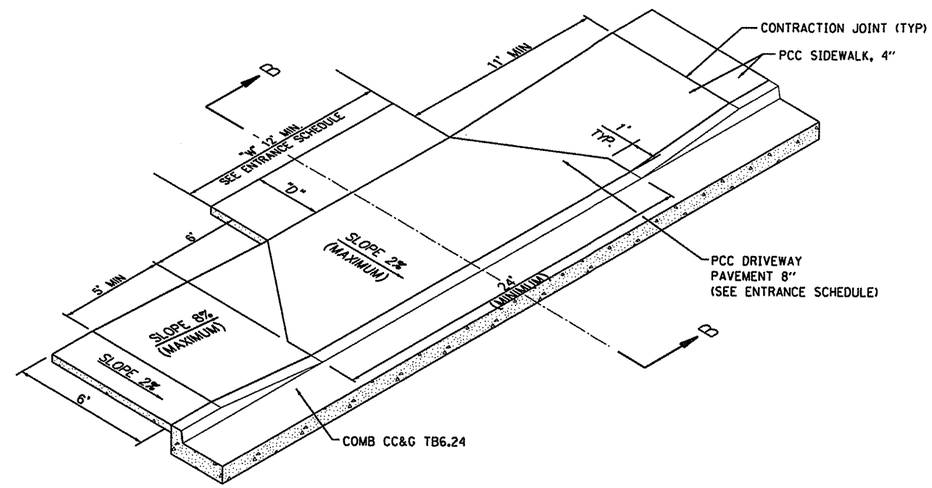

TYPICAL PRIVATE ENTRANCE DETAIL

(NOT TO SCALE)

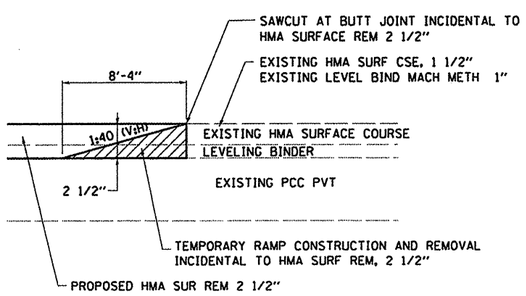

TEMPORARY RAMP

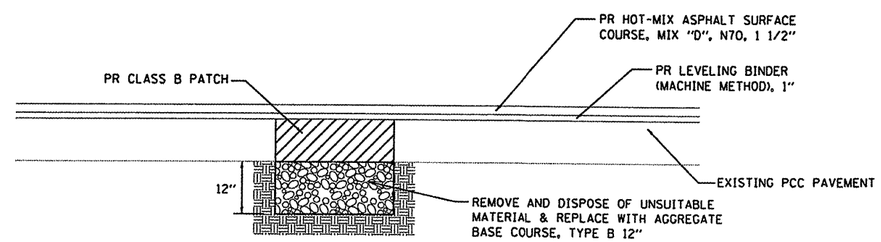

PAVEMENT PATCH DETAIL

(NOT TO SCALE)

FILE NAME = H:\P\29061\Microstation\CADD Sheets\D829061-sht-details.dgn	USER NAME = default	DESIGNED -	REVISED -
		DRAWN -	REVISED -
	PLOT SCALE = 40.0000 ' / IN.	CHECKED -	REVISED -
	PLOT DATE = 10/14/2011	DATE -	REVISED -

STATE OF ILLINOIS
DEPARTMENT OF TRANSPORTATION

DETAILS

SCALE: | SHEET NO. OF SHEETS | STA. TO STA.

F.A.U. RTE.	SECTION	COUNTY	TOTAL SHEETS	SHEET NO.
9330	08-00211-00-PV	ST. CLAIR	85	31
		CONTRACT NO. 97480		
		ILLINOIS FED. AID PROJECT		