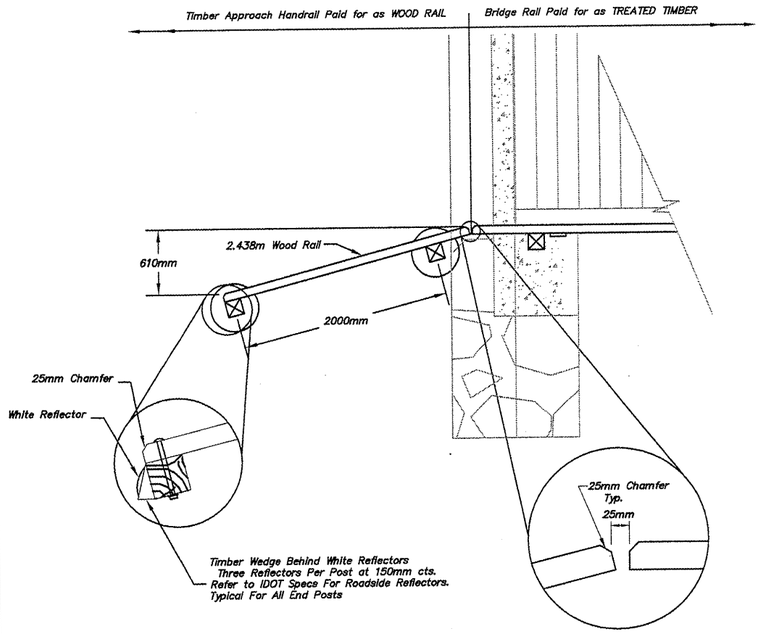

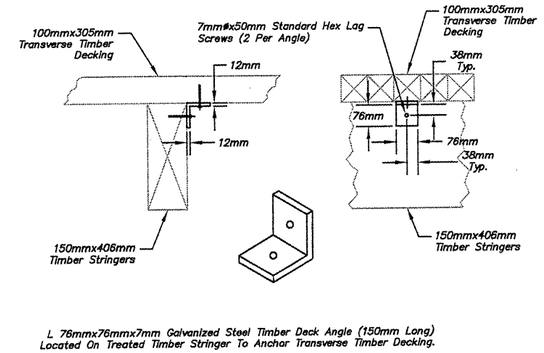

TIMBER DECK ANGLE END

NOT TO SCALE

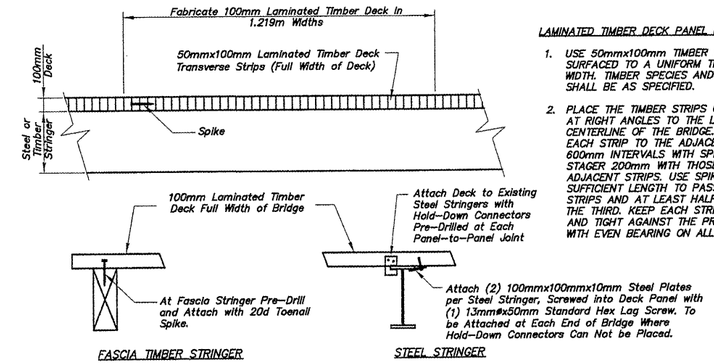

LAMINATED TIMBER DECK PANEL NOTES:

1. USE 50mmx100mm TIMBER STRIPS SURFACED TO A UNIFORM THICKNESS AND WIDTH. TIMBER SPECIES AND TREATMENT SHALL BE AS SPECIFIED.
2. PLACE THE TIMBER STRIPS ON EDGE AND AT RIGHT ANGLES TO THE LONGITUDINAL CENTERLINE OF THE BRIDGE. FASTEN EACH STRIP TO THE ADJACENT STRIP AT 600mm INTERVALS WITH SPIKES THAT STAGER 200mm WITH THOSE IN ADJACENT STRIPS. USE SPIKES OF SUFFICIENT LENGTH TO PASS THROUGH 2 STRIPS AND AT LEAST HALFWAY THROUGH THE THIRD. KEEP EACH STRIP VERTICAL AND TIGHT AGAINST THE PRECEDING ONE WITH EVEN BEARING ON ALL SUPPORTS.

LAMINATED TIMBER DECK PANEL

NOT TO SCALE

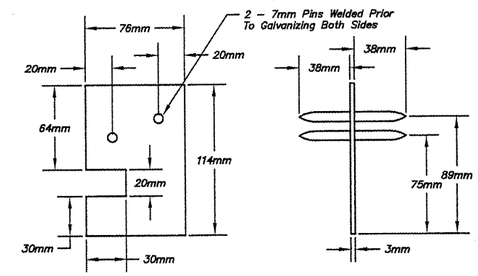

TIMBER HOLD-DOWN CONNECTORS

NOT TO SCALE

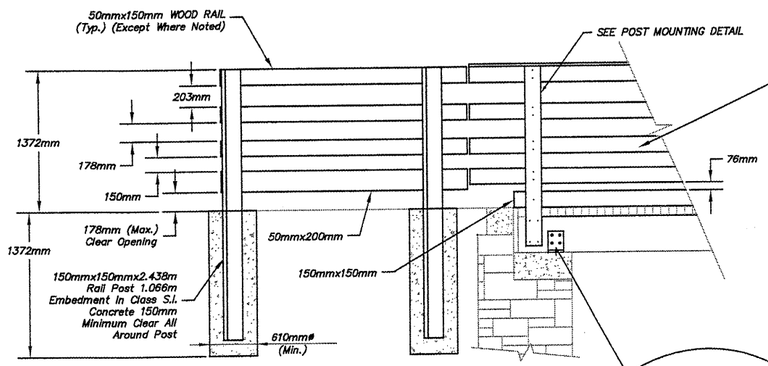

WOOD RAIL DETAIL

NOT TO SCALE

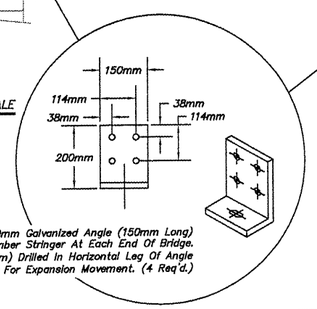

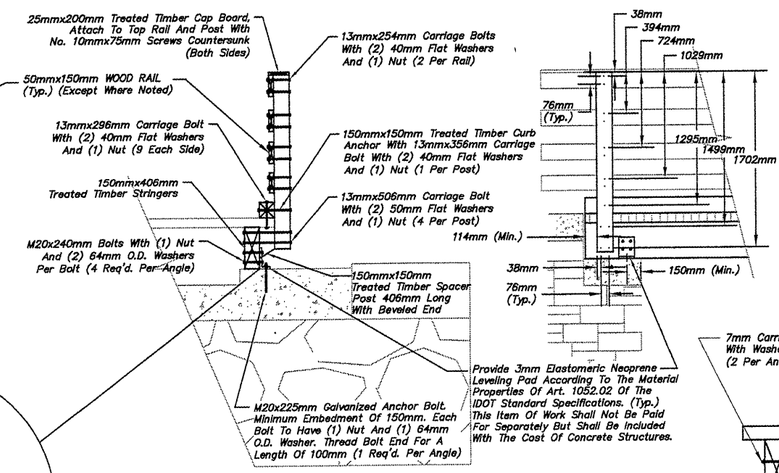

BRIDGE RAIL & TIMBER STRINGER BEARING DETAILS

NOT TO SCALE

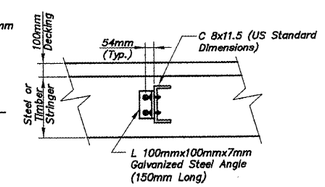

SECTION A-A

NOTE:
THE MATERIAL AND LABOR FOR THE STEEL DIAPHRAGMS WILL NOT BE PAID FOR SEPARATELY BUT SHALL BE INCLUDED WITH THE COST TO REMOVE AND RESET EXISTING STEEL STRINGER ASSEMBLIES.

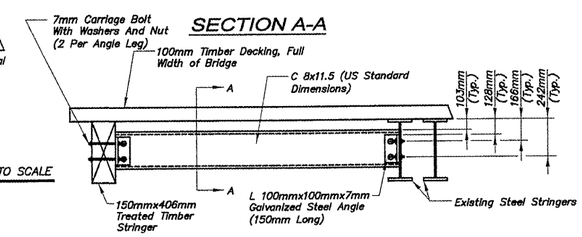

ELEVATION VIEW

STEEL DIAPHRAGM DETAIL

NOT TO SCALE

SHEET REVIEW	
AGENCY	DATE

REVISIONS		
NO.	ITEM	DATE

SCALE:	Not to Scale
DRAWN BY:	REK
CHECKED BY:	JWH
DATE:	DECEMBER 12, 2011

McClure Engineering Associates, Inc.
7262 Argus Drive (815) 398-2332
Rockford, Illinois 61107-6837 FAX (815) 398-2496
Design Firm License: Illinois 184-000816
Copyright 2011 By McClure Engineering Associates, Inc.

BRIDGE DETAILS
PECATONICA PRAIRIE PATH
WINNEBAGO COUNTY HIGHWAY DEPARTMENT
SECTION 94-00267-00-BT
FILE:H:\10-042 WINN CO PEC PATH\DESIGN\DRAWINGS\BRIDGES\10-042 BRIDGEDETAILS.DWG
JOB:04-30-10-042