STATE OF ILLINOIS
DEPARTMENT OF TRANSPORTATION

ROUTE NO.	SECTION	COUNTY	TOTAL SHEETS	SHEET NO.
FAP 662	(V,T)B-2	MACOUPIN	66	34
FED. ROAD DIST. NO. 7		ILLINOIS	FED. AID PROJECT-	

SHEET NO. 8
20 SHEETS

Contract #72993

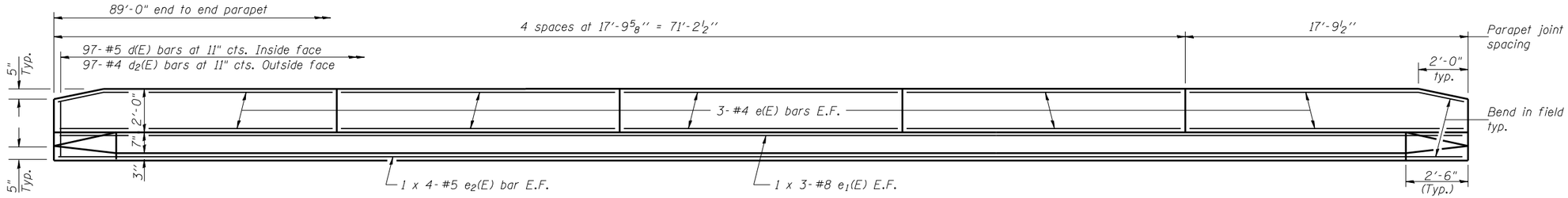

INSIDE ELEVATION OF PARAPET

MIN. BAR LAPS

#5 bar = 1'-8"
#8 bar = 3'-5"

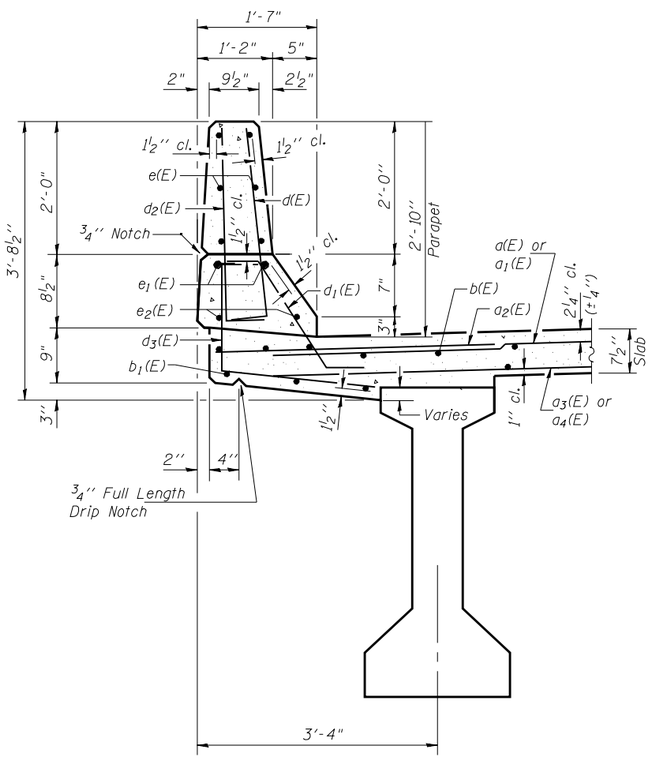

SECTION THRU PARAPET

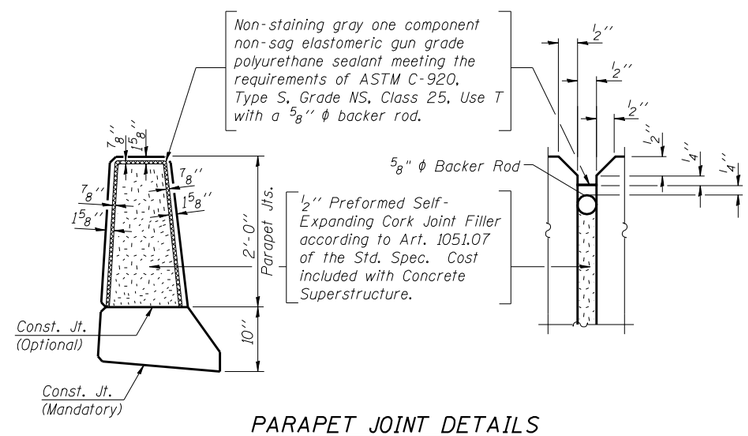

PARAPET JOINT DETAILS

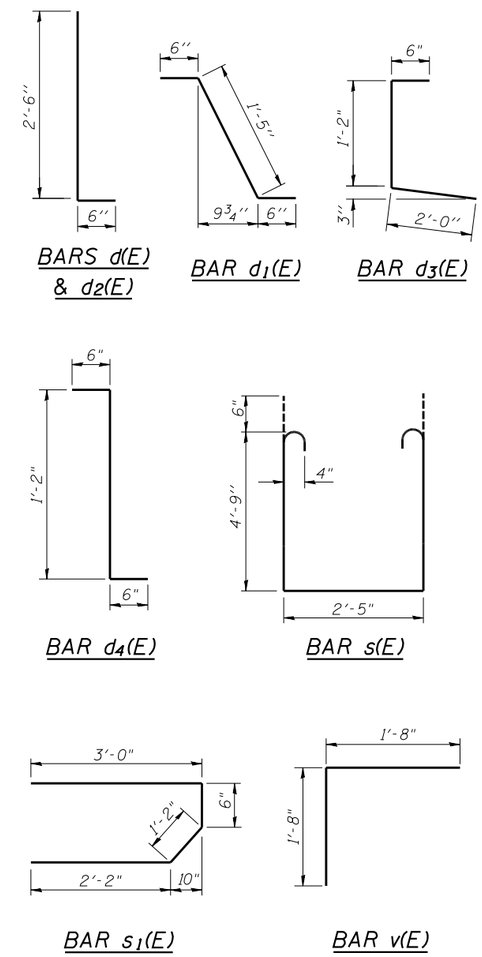

SUPERSTRUCTURE BILL OF MATERIAL

Bar	No.	Size	Length	Shape
d(E)	134	#5	20'-7"	
d1(E)	134	#5	17'-7"	
d2(E)	268	#6	6'-0"	
d3(E)	107	#5	16'-9"	
d4(E)	107	#5	19'-9"	
d5(E)	4	#5	22'-1"	
d6(E)	4	#5	18'-9"	
b(E)	123	#5	30'-8"	
b1(E)	144	#5	23'-5"	
d(E)	194	#5	3'-0"	
d1(E)	182	#5	2'-5"	
d2(E)	194	#4	3'-0"	
d3(E)	194	#4	3'-8"	
d4(E)	12	#5	2'-2"	
e(E)	60	#4	17'-6"	
e1(E)	12	#8	31'-10"	
e2(E)	16	#5	23'-5"	
m(E)	4	#6	18'-7"	
m1(E)	4	#6	21'-11"	
m2(E)	6	#6	19'-7"	
m3(E)	6	#6	22'-11"	
m4(E)	16	#6	9'-11"	
m5(E)	8	#6	4'-9"	
m6(E)	4	#6	2'-4"	
m7(E)	2	#6	3'-10"	
m8(E)	4	#6	6'-9"	
m9(E)	4	#6	10'-1"	
s(E)	62	#4	12'-11"	
s1(E)	78	#5	6'-10"	
v(E)	78	#5	3'-4"	
Reinforcement Bars, Epoxy Coated			Lbs.	25920
Concrete Superstructure			Cu. Yds.	144.5

Bars indicated thus 1 x 3-#8 etc. indicates 1 line of bar with 3 lengths per line.

DESIGNED	DPN
CHECKED	AJB
DRAWN	h.t. duong
CHECKED	FT/AJB/DPN

Jan 23, 2007
EXAMINED Thomas J. Domagalski
ENGINEER OF BRIDGE DESIGN
PASSED Ralph E. Anderson
ENGINEER OF BRIDGES AND STRUCTURES

SUPERSTRUCTURE DETAILS
F.A.P. RT. 662 SECTION (V,T)B-2
MACOUPIN COUNTY
STATION 447+03.80
STRUCTURE NO. 059-0504