03-08-2024 LETTING ITEM 140

F.A.P. RTE	SECTION	COUNTY	TOTAL SHEETS	SHEET NO.
693	(129)RS-4	McLEAN	218	1
	ILLINOIS	CONTRACT NO. 70855		

FOR INDEX OF SHEETS, SEE SHEET NO. 2

FOR SUMMARY OF QUANTITIES, SEE SHEET NO. 4–18

CURRENT TRAFFIC DATA FOR FAP 693, FAU 6385 AND FAU 6373

	LEG "A"	LEG "B"	LEG "C"
2019 ADT	18,600	15,700	4,950
P.U.%	81.2	84.1	88.9
S.U.%	7.5	7.3	6.6
M.U.%	11.3	8.6	4.5

LEG "A" is ILL 9 from I–55 /I–74 to MLK Dr.
LEG "B" is ILL 9 from MLK Dr. to Hinshaw Ave.
LEG "C" is ILL 9 from Market St. to Locus St.

DESIGN DESIGNATION
N/A

10/9/23
DATE
LUKE D. ZELLER
062-064301
REGISTERED PROFESSIONAL ENGINEER OF
STATE OF ILLINOIS
11-30-2023
SIGNATURE
ENGINEER'S SEAL

Hutchison Engineering, Inc.

FULL SIZE PLANS HAVE BEEN PREPARED USING STANDARD ENGINEERING SCALES. REDUCED SIZED PLANS WILL NOT CONFORM TO STANDARD SCALES. IN MAKING MEASUREMENTS ON REDUCED PLANS, THE ABOVE SCALES MAY BE USED.

J.U.L.I.E.
JOINT UTILITY LOCATION INFORMATION FOR EXCAVATION
1–800–892–0123
OR 811
BLOOMINGTON TOWNSHIP

PROJECT ENGINEER: JASON W. STULTS
PROJECT MANAGER: BRIAN J. HOGAN
PHONE NUMBER (217) 465–4181

CONTRACT NO. 70855

STATE OF ILLINOIS
DEPARTMENT OF TRANSPORTATION

PROPOSED
HIGHWAY PLANS

VARIOUS ROUTES
SECTION (129)RS–4
PROJECT NHPP–STP–CD3U(601)
3P POLICY, DESIGNED OVERLAY, ADA IMPROVEMENTS, TRAFFIC IMPROVEMENTS AND TRAFFIC SIGNAL REPLACEMENT
MCLEAN COUNTY

C–95–026–10

ILL 9: MARTIN LUTHER KING DR. TO N. HINSHAW AVE.;
N. HINSHAW AVE.: ILL 9 TO W. MULBERRY ST.;
W. LOCUST ST.: N. HINSHAW AVE. TO WHITE OAK DR.;
WHITE OAK DR.: W. LOCUST ST. TO ILL 9
(ALL IN BLOOMINGTON)

EX. S.N. 057–0190
STA. 67 + 49.45 R2
TO STA. 68 + 38.83 R2
CONCRETE WEARING SURFACE REPAIR, CONSTRUCT NEW SIDEWALK WITH BARRIER AND RAILING ALONG NORTH EDGE AND PROVIDE FLOOR DRAINS BENEATH NEW SIDEWALK

BEGINNING OF PROJECT
STA. 62 + 75.64 R2

STATION EQUATION:
STA. 68 + 61.44 R2 (BK) =
STA. 68 + 00.72 R3 (AHD)

STATION EQUATION:
STA. 72 + 39.77 R3 (BK) =
STA. 72 + 40.13 R4 (AHD)

STATION EQUATION:
STA. 75 + 27.42 R4 (BK) =
STA. 75 + 27.79 R5 (AHD)

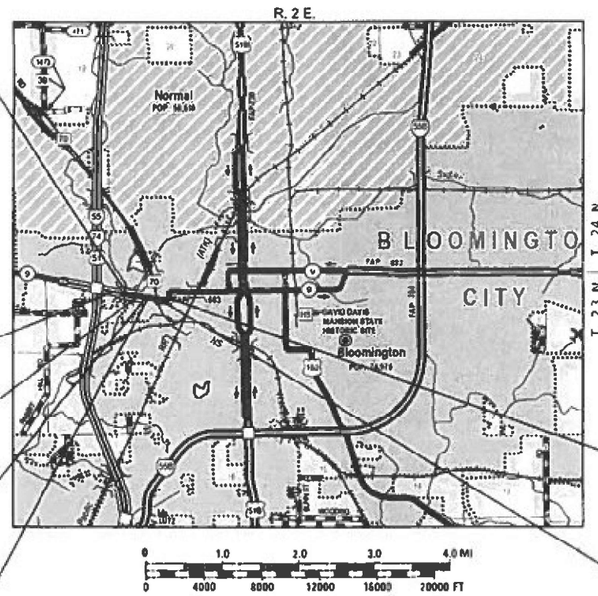

LOCATION MAP

GROSS LENGTH = 2,926.05 FT. = 0.554 MILES
NET LENGTH = 2,900.93 FT. = 0.549 MILES

END OF PROJECT
STA. 91 + 41.70 R5

NORFOLK SOUTHERN RAILROAD (OMISSION)
STA. 82 + 91.10 R5 TO
STA 83 + 16.22 R5
(MIDWEST DIVISION MP SP-376.50)

D–95–029–22

LOCATION OF SECTION INDICATED THUS: –

STATE OF ILLINOIS
DEPARTMENT OF TRANSPORTATION

SUBMITTED 10/18 2023
Kevin A. Garnett SWN
REGIONAL ENGINEER
December 8, 2023
ENGINEER OF DESIGN AND ENVIRONMENT
December 8, 2023
DIRECTOR OF HIGHWAYS PROJECT IMPLEMENTATION

PRINTED BY THE AUTHORITY OF THE STATE OF ILLINOIS

REV. 12/12/23

STANDARDS

000001-08	STANDARD SYMBOLS, ABBREVIATIONS AND PATTERNS
001006-00	DECIMAL OF AN INCH AND OF A FOOT
280001-07	TEMPORARY EROSION CONTROL SYSTEMS
424001-11	PERPENDICULAR CURB RAMPS FOR SIDEWALKS
424011-04	CORNER PARALLEL CURB RAMPS FOR SIDEWALKS
424016-05	MID-BLOCK CURB RAMPS FOR SIDEWALKS
424026-03	ENTRANCE / ALLEY PEDESTRIAN CROSSINGS
442101-09	CLASS B PATCHES
442201-03	CLASS C AND D PATCHES
542301-03	PRECAST REINFORCED CONCRETE FLARED END SECTION
602301-04	INLET - TYPE A
602306-03	INLET - TYPE B
602401-07	PRECAST MANHOLE TYPE A 4' (1.22m) DIAMETER
602701-02	MANHOLE STEPS
604001-05	FRAMES AND LIDS TYPE 1
604006-05	FRAME AND GRATE TYPE 3
604036-03	GRATE TYPE 8
606001-08	CONCRETE CURB TYPE B AND COMBINATION CONCRETE CURB AND GUTTER
606301-04	PC CONCRETE ISLANDS AND MEDIANS
630001-13	STEEL PLATE BEAM GUARDRAILGUARDRAIL TERMINALS
630301-09	SHOULDER WIDENING FOR TYPE 1 (SPECIAL)
631031-18	TRAFFIC BARRIER TERMINAL, TYPE 6
666001-01	RIGHT OF WAY MARKERS
701427-05	LANE CLOSURE, MULTILANE, INTERMITTENT OR MOVING OPER., FOR SPEEDS ≤ 40 MPH
701501-06	URBAN LANE CLOSURE, 2L, 2W, UNDIVIDED
701502-09	URBAN LANE CLOSURE, 2L, SW, WITH BIDIRECTIONAL LEFT TURN LANE
701602-10	URBAN LANE CLOSURE, MULTILANE, 2W WITH BIDIRECTIONAL LEFT TURN LANE
701701-10	URBAN LANE CLOSURE, MULTILANE INTERSECTION
701801-06	SIDEWALK, CORNER OR CROSSWALK CLOSURE
701901-09	TRAFFIC CONTROL DEVICES
704001-08	TEMPORARY CONCRETE BARRIER
720001-01	SIGN PANEL MOUNTING DETAILS
720006-04	SIGN PANEL ERECTION DETAILS
720011-01	METAL POSTS FOR SIGNS, MARKERS AND DELINEATORS
720016-04	MAST ARM MOUNTED STREET SIGNS
725001-01	OBJECT AND TERMINAL MARKERS
728001-01	TELESCOPING STEEL SIGN SUPPORT
729001-01	APPLICATIONS OF TYPES A AND B METAL POSTS (FOR SIGNS & MARKERS)
731001-01	BASE FOR TELESCOPING STEEL SIGN SUPPORT
780001-05	TYPICAL PAVEMENT MARKINGS
781001-04	TYPICAL APPLICATIONS RAISED REFLECTIVE PAVEMENT MARKERS
782006-01	GUARDRAIL AND BARRIER WALL REFLECTOR MOUNTING DETAILS
805001-01	ELECTRICAL SERVICE INSTALLATION DETAILS
814001-03	HANDHOLES
814006-03	DOUBLE HANDHOLES
857001-01	STANDARD PHASE DESIGNATION DIAGRAMS AND PHASE SEQUENCERS
862001-01	UNINTERRUPTABLE POWER SUPPLY (UPS)
873001-02	TRAFFIC SIGNAL GROUNDING & BONDING
876001-04	PEDESTRIAN PUSH BUTTON POST
877001-08	STEEL MAST ARM ASSEMBLY AND POLE 16' THROUGH 55'
877011-10	STEEL COMBINATION MAST ARM ASSEMBLY AND POLE 16' THROUGH 55'
878001-11	CONCRETE FOUNDATION DETAILS
880006-01	TRAFFIC SIGNAL MOUNTING DETAIL

INDEX OF SHEETS

1	COVER SHEET
2	INDEX OF SHEETS & LIST OF STANDARDS
3	GENERAL NOTES
4-18	SUMMARY OF QUANTITIES
19-23	TYPICAL SECTIONS
24-36	SCHEDULES OF QUANTITIES
37	ALIGNMENT, TIES AND BENCHMARKS
38-55	PLAN & PROFILES
56-61	REMOVAL PLANS
62	EROSION CONTROL PLANS
63-73	DRAINAGE & UTILITY PLAN & PROFILES
74-81	INTERSECTION DETAILS
82-99	ADA SIDEWALK DETAILS
100-109	PAVEMENT MARKING AND SIGNING PLANS
110-135	TRAFFIC SIGNAL PLANS
136-146	STRUCTURE PLANS
147-154	STAGING PLANS FOR STRUCTURE CONSTRUCTION
155-164	RETAINING WALL PLANS
165-167	MISCELLANEOUS DETAILS
168-176	DISTRICT 5 DETAILS
177-181	ROW PLANS
182-218	CROSS SECTIONS

FINAL SURVEY NOTE BOOK NO. | DATE | BY | SURVEYED | PLOTTED | TEMPLATE | AREAS | AREAS CHECKED

ORIGINAL SURVEY NOTE BOOK NO. | DATE | BY | SURVEYED | PLOTTED | TEMPLATE | AREAS | AREAS CHECKED

MODEL: general notes
FILE NAME: V:\4216 - IL 9 Bloomington\CADD\CADD Sheets\D5\70855-sht-general.dgn

Hutchison Engineering, Inc.

USER NAME = BDeCraene	DESIGNED -	REVISED -
	DRAWN -	REVISED -
PLOT SCALE = 0.16666633 ' / In.	CHECKED -	REVISED -
PLOT DATE = 10/17/2023	DATE -	REVISED -

STATE OF ILLINOIS
DEPARTMENT OF TRANSPORTATION

FAP 693 (IL RTE 9)
INDEX OF SHEETS & LIST OF STANDARDS

SCALE: N/A | SHEET 1 OF 1 SHEETS | STA. | TO STA.

F.A.P. RTE.	SECTION	COUNTY	TOTAL SHEETS	SHEET NO.
693	(129)RS-4	McLEAN	218	2
		CONTRACT NO. 70855		
	ILLINOIS	FED. AID PROJECT		

GENERAL NOTES

G.N.-100A
ELECTRONIC FILES AND/OR ELECTRONIC SURVEY INFORMATION INCLUDING CADD FILES WILL NOT BE AVAILABLE TO THE CONTRACTOR.

G.N.-105.09A
ALL ELEVATIONS SHOWN IN THE PLANS ARE BASED ON NORTH AMERICAN VERTICAL DATUM OF 1988. (NAVD 88)

G.N.-107.12
THE NAME, ADDRESS AND TELEPHONE NUMBER OF THE LOCAL RAILROAD CONTACT IS:

MR. GEORGE (BRIAN) TAYLOR
ENGINEER OF PUBLIC IMPROVEMENTS (DE, IL, MD, NC, VA & WV)
NORFOLK SOUTHERN CORPORATION
650 WEST PEACHTREE STREET, NW BOX 45
ATLANTA, GA 30308
(470) 463-7534(0)
george.taylor3@nscorp.com

SOME RAILROADS REQUIRE CONTRACTORS TO OBTAIN A RIGHT OF ENTRY PERMIT BEFORE ENTERING UPON RAILROAD RIGHT OF WAY. IT IS THE RESPONSIBILITY OF THE CONTRACTOR TO OBTAIN A RAILROAD RIGHT OF ENTRY PERMIT FROM THE RAILROAD IF REQUIRED BY THE RAILROAD(S).

G.N.-201
TREES THAT INTERFERE WITH THE CONSTRUCTION OPERATIONS SHALL BE REMOVED AS DIRECTED BY THE ENGINEER. ANY TREE DUE TO IT'S LOCATION AND DEEMED SUITABLE FOR SAVING BY THE ENGINEER SHALL BE PROTECTED DURING CLEARING AND SUBSEQUENT CONSTRUCTION OPERATIONS.

G.N.-406H

MIXTURE REQUIREMENTS

THE FOLLOWING MIXTURE REQUIREMENTS ARE APPLICABLE FOR THIS PROJECT:

LOCATION(S):	IL 9 / US 150	IL 9 / US 150	IL 9 / US 150	IL 9 / US 150	IL 9 / US 150	WHITE OAK	WHITE OAK
MIXTURE USE(S)	POLYMERIZED SURFACE	POLYMERIZED BINDER	POLYMERIZED BINDER	CLASS D PATCH	BASE CSE WIDENING 10"	SURFACE	BINDER
AC/PG	SBS PG 76-22	SBS PG 70-22	SBS PG 70-22	PG 64-22	PG 64-22	PG 64-22	PG 64-22
DESIGN AIR VOIDS	4.0% @ Ndes=80	4.0% @ Ndes=70	4.0% @ Ndes=50	4.0% @ Ndes=70	4.0% @ Ndes=70	4.0% @ Ndes=50	4.0% @ Ndes=50
MIXTURE COMP (GRADATION)	SMA 12.5	IL 19.0	IL 4.75	IL 19.0	IL 19.0	IL 9.5	IL 19.0
FRICTION AGGREGATE	MIX E	N.A.	N.A.	N.A.	N.A.	MIX C	N.A.
MIXTURE WEIGHT	112	112	112	112	112	112	112
QUALITY MANAGEMENT PROGRAM	QCP	QCP	QC/QA	QC/QA	QC/QA	QC/QA	QC/QA
SUBLOT SIZE	1000	1000	1000	N.A.	N.A.	1000	1000

G.N.-406S
THE FOLLOWING TABLE IS A LISTING OF POSTED SPEED LIMITS WITHIN THE PROJECT LIMITS. THE ENGINEER SHALL FIELD VERIFY THESE LIMITS:

STATION	TO	STATION	LOCATION	POSTED SPEED LIMIT (MPH)
62+76	TO	77+25	MARKET	40
77+25	TO	91+42	MARKET	30
0+00	TO	3+02	HINSHAW	30
200+00	TO	205+34	WHITE OAK	30

G.N.-440B
THE EXISTING TIE BARS BETWEEN THE EXISTING PAVEMENT AND EXISTING MEDIANS, GUTTERS AND/OR COMBINATION CURB AND GUTTERS THAT ARE FOUND SUITABLE FOR REUSE SHALL BE CLEANED, STRAIGHTENED AND INCORPORATED INTO THE NEW CONSTRUCTION. ANY EXISTING TIE BARS THAT ARE FOUND UNSUITABLE TO BE INCORPORATED INTO THE PROPOSED CONSTRUCTION TO TO EXCESSIVE RUSTING OR DISTRESS SHALL BE REMOVED FLUSH WITH THE FACE OF THE EXISTING CONCRETE AND DISPOSED OF OUTSIDE THE LIMITS OF THE RIGHT-OF-WAY IN ACCORDANCE WITH ARTICLE 202.03 OF THE STANDARD SPECIFICATIONS.

THIS WORK WILL NOT BE PAID FOR SEPARATELY BUT SHALL BE CONSIDERED INCLUDED IN THE VARIOUS REMOVAL PAY ITEMS AND NO ADDITIONAL COMPENSATION WILL BE ALLOWED.

G.N.-551
EXISTING STORM SEWERS SHALL BE REMOVED IN ACCORDANCE WITH SECTION 551 OF THE STANDARD SPECIFICATIONS EXCEPT THAT THE CONTRACTOR WILL NOT BE REQUIRED TO SALVAGE ANY EXISTING SEWER PIPE.

G.N.-703A
SHORT TERM PAVEMENT MARKING SHALL BE APPLIED TO THE PAVEMENT AFTER ANY OF THE FOLLOWING: COLD MILLING AND/OR PLACING BITUMINOUS MATERIALS (TACK COAT), LEVELING BINDER (MACHINE METHOD), BINDER AND SURFACE COURSES. SHORT TERM PAVEMENT MARKING PLACED ON THE SURFACE SHALL COINCIDE WITH THE FINAL PAVEMENT STRIPING. SHORT TERM PAVEMENT MARKING PLACED PRIOR TO THE SURFACE SHALL COINCIDE WITH THE EXISTING PAVEMENT MARKINGS. USE 4 FEET PER 40 FEET (OR 10% PER STATION).

G.N.-781
THE FINAL PAVEMENT MARKINGS SHALL BE PLACED PRIOR TO PLACING THE RAISED REFLECTIVE PAVEMENT MARKERS.

1. SAW CUTS MADE BETWEEN EXISTING IMPROVEMENTS TO REMAIN AND TO BE REMOVED WILL NOT BE PAID FOR SEPARATELY, BUT SHALL BE CONSIDERED INCLUDED WITH THE COST OF THE ITEM BEING REMOVED.

2. THE RIGHT OF WAY LINES, STATION/OFFSET INFORMATION AND DIMENSIONS SHOWN HEREON ARE BASED ON RIGHT OF WAY PLANS PREPARED BY THE ILLINOIS DEPARTMENT OF TRANSPORTATION FOR F.A.P. 693 (IL RTE 9) - SECTION (129)RS-4. THEIR ACCURACIES SHOULD BE CONSIDERED AS APPROXIMATE ONLY.

3. SEEDING CLASS 7 AND MULCH, METHOD 2 TO BE USED IN CASE SODDING CANNOT BE COMPLETED BEFORE A WINTER SHUTDOWN. ONE APPLICATION EACH, IF NECESSARY.

4. NO COMMITMENTS.

5. PROJECT DOES NOT CHANGE THE QUANTITY AND/OR CHARACTER OF FLOW IN THE RAILWAY'S DITCHES AND/OR DRAINAGE STRUCTURES.

6. FOR PROJECTS EXCEEDING 30 DAYS OF CONSTRUCTION, CONTRACTOR SHALL PROVIDE THE RAILROAD PROTECTIVE SERVICES PERSONNEL A SMALL WORK AREA WITH A DESK/COUNTER AND CHAIR WITHIN THE FIELD/SITE TRAILER, INCLUDING THE USE OF BATHROOM FACILITIES, WHERE THE RAILROAD PROTECTIVE SERVICES PERSONNEL CAN CHECK IN/OUT WITH THE PROJECT, AS WELL AS TO THE RAILROAD PROTECTIVE SERVICES PERSONNEL'S HOME TERMINAL. THE WORK AREA SHOULD PROVIDE ACCESS TO TWO (2) ELECTRICAL OUTLETS FOR RECHARGING RADIO(S), AND A LAPTOP COMPUTER; AND HAVE THE ABILITY TO PRINT OFF NEEDED DOCUMENTATION AND ORDERS AS NEEDED AT THE FIELD/SITE TRAILER. THIS SHOULD AID IN MAXIMIZING THE RAILROAD PROTECTIVE SERVICES PERSONNEL'S TIME AND EFFICIENCY ON THE PROJECT.

7. ALL WORK TO BE PERFORMED ON, OVER, UNDER, OR ADJACENT TO THE RAILROAD RIGHT-OF-WAY SHALL COMPLY WITH THE NORFOLK SOUTHERN RAILWAY COMPANY PUBLIC IMPROVEMENTS PROJECT MANUAL (APPENDIX E, NORFOLK SOUTHERN SPECIAL PROVISIONS FOR THE PROTECTION OF RAILWAY INTERESTS). WHEN IN CONFLICT WITH OTHER PROJECT SPECIFICATIONS, THE MOST STRINGENT ONE SHALL APPLY.

8. "ONE CALL" SERVICES DO NOT LOCATE BURIED RAILROAD SIGNAL AND COMMUNICATION LINES. THE CONTRACTOR SHALL CONTACT THE RAILROAD'S REPRESENTATIVES 2 DAYS IN ADVANCE OF WORK AT THOSE PLACES WHERE EXCAVATION, PILE DRIVING, OR HEAVY LOADS MAY DAMAGE THE RAILROAD'S UNDERGROUND FACILITIES. UPON REQUEST FROM THE CONTRACTOR OR SPONSOR, RAILROAD FORCES WILL LOCATE AND PAINT MARK OR FLAG THE RAILROAD'S UNDERGROUND FACILITIES (SEE NS PUBLIC PROJECTS MANUAL, APPENDIX E, SECTION 3.D.).

9. THE CONTRACTOR SHALL NOT COMMENCE ANY WORK ON RAILROAD RIGHT-OF-WAY UNTIL HE HAS COMPLIED WITH THE CONDITIONS PRESENTED ON NS PUBLIC PROJECTS MANUAL (SEE APPENDIX E, NORFOLK SOUTHERN SPECIAL PROVISIONS FOR PROTECTION OF RAILWAY INTERESTS). THE CONTRACTOR SHALL SO ARRANGE AND CONDUCT HIS WORK THAT THERE WILL BE NO INTERFERENCE WITH RAILROAD OPERATIONS. WHENEVER WORK IS LIABLE TO AFFECT OPERATIONS OR SAFETY OF TRAINS, THE METHODS OF DOING SUCH WORKS SHALL FIRST BE SUBMITTED TO THE RAILROAD ENGINEER FOR APPROVAL, BUT SUCH APPROVAL SHALL NOT RELIEVE THE CONTRACTOR FROM ANY LIABILITY. RIGHT-OF-WAY AND/OR SECURITY FENCE SHALL BE PROVIDED AS DIRECTED BY THE NS PUBLIC PROJECT ENGINEER. (SEE NS PUBLIC PROJECTS MANUAL, APPENDIX E, SECTIONS 2 AND 3).

THE FOLLOWING RATES OF APPLICATION HAVE BEEN USED TO CALCULATE THE PLAN QUANTITIES:

BITUMINOUS MATERIALS (TACK COAT)	0.05 LBS/SQ. FT. (EXIST HMA, MILLED SURF.)
BITUMINOUS MATERIALS (TACK COAT)	0.025 LBS/SQ. FT. (BETWEEN HMA LIFTS)
PRIME COAT FOR AGGREGATE BASES	0.25 LBS/SQ. FT. (ON AGG BASE)
HOT-MIX ASPHALT SURFACE/BINDER	0.056 TON/SQ. YD./IN.
AGGREGATE MATERIAL	1.80 TON/CU. YD. (SURFACE, BASE, SUBBASE)
AGGREGATE SHOULDERS	1.60 TON/CU. YD.
RIPRAP	1.60 TON/CU. YD.
NITROGEN FERTILIZER NUTRIENT	60 LBS/ACRE
PHOSPHORUS FERTILIZER NUTRIENT	60 LBS/ACRE
POTASSIUM FERTILIZER NUTRIENT	60 LBS/ACRE
AGRICULTURAL GROUND LIMESTONE	2.0 TON/ACRE
MULCH	2.0 TON/ACRE
TEMPORARY SEEDING	100 LBS/ACRE
AGGREGATE FOR TEMPORARY ACCESS	2.05 TONS/CU. YD.
SUPPLEMENTAL WATERING	150 GAL/SQ. YD.

FINAL SURVEY / ORIGINAL SURVEY
NOTE BOOK
NO.
SURVEYED
PLOTTED
TEMPLATE
AREAS
AREAS CHECKED
BY
DATE

MODEL: general notes - 2
FILE NAME: V:\4216 - IL 9 @Bloomington\CADD\CADD Sheets\D57965>ed#general.dgn

Hutchison Engineering, Inc.

USER NAME = BDeCraene	DESIGNED -	REVISED -	11/16/2023
	DRAWN -	REVISED -	12/06/2023
PLOT SCALE = 0.16666633 ' / In.	CHECKED -	REVISED -	
PLOT DATE = 12/6/2023	DATE -	REVISED -	

STATE OF ILLINOIS
DEPARTMENT OF TRANSPORTATION

FAP 693 (IL RTE 9)
GENERAL NOTES

SCALE: N/A | SHEET 1 OF 1 SHEETS | STA. | TO STA.

F.A.P. RTE.	SECTION	COUNTY	TOTAL SHEETS	SHEET NO.
693	(129)RS-4	McLEAN	218	3
		CONTRACT NO. 70855		
	ILLINOIS	FED. AID PROJECT		

	CODE NO.	ITEM	UNIT	TOTAL QUANTITY	CONSTRUCTION CODE: FAP 693 (ILL 9 / US 150) URBAN OTHER PRINCIPAL ARTERIAL STA 62+75.64 TO STA 91+41. 70 (MARKET ST) STA 0+00.00 TO STA 3+01. 27 (HINSHAW AVE) MCLEAN COUNTY NHPP 80% FEDERAL / 20% STATE 0005	CONSTRUCTION CODE: FAP 693 (MARKET ST) URBAN OTHER PRINCIPAL ARTERIAL MILL AND RESURFACE PARKING LANE MCLEAN COUNTY 50% STATE / 50% CITY 0005	CONSTRUCTION CODE: SN 057-0190 URBAN OTHER PRINCIPAL ARTERIAL STA 67+94.50 MCLEAN COUNTY 100% STATE 0047	CONSTRUCTION CODE: FAP 693 (MARKET ST & MLK DR) URBAN OTHER PRINCIPAL ARTERIAL STA 64+81. 79 MCLEAN COUNTY NHPP 80% FEDERAL / 10% STATE / 10% CITY 0021	CONSTRUCTION CODE: FAP 693 (MARKET ST & CAROLINE ST) URBAN OTHER PRINCIPAL ARTERIAL STA 72+26.03 MCLEAN COUNTY NHPP 80% FEDERAL / 10% STATE / 10% CITY 0021	CONSTRUCTION CODE: FAP 693 (MARKET ST & BROWN ST) URBAN OTHER PRINCIPAL ARTERIAL STA 78+29.91 MCLEAN COUNTY NHPP 80% FEDERAL / 13.3% STATE / 6.7% CITY 0021	CONSTRUCTION CODE: FAP 693 (MARKET ST & HINSHAW AVE) URBAN OTHER PR INC IPAL ARTERIAL STA 90+76.51 MCLEAN COUNTY NHPP 80% FEDERAL / 10% STATE / 10% CITY 0021	CONSTRUCTION CODE: FAP 693 (MARKET ST) URBAN OTHER PRINCIPAL ARTERIAL SIGNAL PRE-EMPT! ON / SIGNAL PAINTING MCLEAN 100% CITY 0021	CONSTRUCTION CODE: FAU 6385 (WHITE OAK RD) URBAN MAJOR COLLECTOR STA 200+00.00 TO 205+33.83 MCLEAN COUNTY STP-50-200K COUNTY 80% FEDERAL /20% STATE 0004	CONSTRUCTION CODE: FAU 6373 (LOCUST ST) URBAN MINOR ARTERIAL STA 100+00.00 TO 1+00.00 MCLEAN COUNTY STP-50-200K 80% FEDERAL / 20% STATE 0021
	20100110	TREE REMOVAL (6TO 15 UNITS DIAMETER)	UNIT	45	30								15	
	20100210	TREE REMOVAL (OVER 15 UNITS DIAMETER)	UNrT	18	18									
	20200100	EARTH EXCAVATION	CU YD	2049	921								1128	
	20800150	TRENCH BACKFILL	CUYD	162	123								39	
*	25000350	SEEDING, CLASS 7	ACRE	1. 00	0.85								0. 15	
*	25000400	NrTROGEN FERTILIZER NUTRIENT	POUND	74	63								11	
*	25000500	PHOSPHORUS FERTILIZER NUTRIENT	POUND	74	63								11	
*	25000600	POTASSIUM FERTILIZER NUTRIENT	POUND	74	63								11	
*	25100115	MULCH, METHOD 2	ACRE	1.00	0.85								0. 15	
*	25200110	SODDING, SALT TOLERANT	SQ YD	4622	3968								654	
*	25200200	SUPPLEMENTAL WATERING	UNrT	32.5	27.8								4.7	
*	28000250	TEMPORARY EROSION CONTROL SEEDING	POUND	900	760								140	
*	28000400	PERIMETER EROSION BARRIER	FOOT	2555	2100								455	
	28000510	INLET FILTERS	EACH	56	49								7	

*= SPECIALTY ITEM

MODEL: Summary Sheet 1
FILE NAME: V:\4216 - IL 9 Bloomington\CAD\CADD Sheets\247855-sht SOQ.dgn

Hutchison Engineering, Inc.

USER NAME = BDeCrane	DESIGNED -	REVISED -
	DRAWN -	REVISED -
PLOT SCALE = 0.16666633'/in.	CHECKED -	REVISED -
PLOT DATE = 10/27/2023	DATE -	REVISED -

STATE OF ILLINOIS
DEPARTMENT OF TRANSPORTATION

FAP 693 (IL RTE 9)
SUMMARY OF QUANTITIES

SCALE: N/A | SHEET 1 OF 15 SHEETS! STA. TO STA.

FAP. RTE.	SECTION	COUNTY	TOTAL SHEETS:	SHEET NO.
693	(129)RS-4	McLEAN	218	4
		CONTRACT NO. 70855		
	ILLINOIS FED. AID PROJECT			

REV. 12/12/23 REV. 12/1/23

CODE NO.	ITEM	UNIT	TOTAL QUANTITY	CONSTRUCTION CODE: FAP 693 (ILL 9 / US 150) URBAN OTHER PRINCIPAL ARTERIAL STA 62+75.64 TO STA 91+41. 70 (MARKET ST) STA 0+00.00 TO STA 3+01. 27 (HINSHAW AVE) MCLEAN COUNTY NHPP 80% FEDERAL / 20% STATE 0005	FAP 693 (MARKET ST) URBAN OTHER PRINCIPAL ARTERIAL MILL AND RESURFACE PARKING LANE MCLEAN COUNTY 50% STATE / 50% CITY 0005	SN 057-0190 URBAN OTHER PRINCIPAL ARTERIAL STA 67+94.50 MCLEAN COUNTY 100% STATE 0047	FAP 693 (MARKET ST & MLK DR) URBAN OTHER PRINCIPAL ARTERIAL STA 64+81. 79 MCLEAN COUNTY NHPP 80% FEDERAL / 10% STATE / 10% CITY 0021	FAP 693 (MARKET ST & CAROLINE ST) URBAN OTHER PRINCIPAL ARTERIAL STA 72+26.03 MCLEAN COUNTY NHPP 80% FEDERAL / 10% STATE / 10% CITY 0021	FAP 693 (MARKET ST & BROWN ST) URBAN OTHER PRINCIPAL ARTERIAL STA 78+29.91 MCLEAN COUNTY NHPP 80% FEDERAL / 13.3% STATE / 6.7% CITY 0021	FAP 693 (MARKET ST & HINSHAW AVE) URBAN OTHER PR INC IPAL ARTERIAL STA 90+76.51 MCLEAN COUNTY NHPP 80% FEDERAL / 10% STATE / 10% CITY 0021	FAP 693 (MARKET ST) URBAN OTHER PRINCIPAL ARTERIAL SIGNAL PRE-EMPT! ON / SIGNAL PAINTING MCLEAN 100% CITY 0021	FAU 6385 (WHITE OAK RD) URBAN MAJOR COLLECTOR STA 200+00.00 TO 205+33.83 MCLEAN COUNTY STP-50-200K COUNTY 80% FEDERAL /20% STATE 0004	FAU 6373 (LOCUST ST) URBAN MINOR ARTERIAL STA 100+00.00 TO 1+00.00 MCLEAN COUNTY STP-50-200K 80% FEDERAL / 20% STATE 0021
30300112	AGGREGATE SUBGRADE IMPROVEMENT 12"	SQ YD	2309	472									1837	
35400500	PORTLAND CEMENT CONCRETE BASE COURSE WIDENING 10"	SQ YD	34	34										
35600716	HOT-MIX ASPHALT BASE COURSE WIDENING, 10"	SQ YD	50	50										
40600290	BITUMINOUS MATERIALS (TACK COAT)	POUND	20774	16227									4547	
40600370	LONGITUDINAL JOINT SEALANT	FOOT	14081	14081										
40600985	PORTLAND CEMENT CONCRETE SURFACE REMOVAL -BUTT JOINT	SQ YD	1316	1316										
40600990	TEMPORARY RAMP	SQ YD	833	833										
40603080	HOT-MIX ASPHALT BINDER COURSE, IL-19.0, N50	TON	872	152									720	
40603200	POLYMERIZED HOT-MIX ASPHALT BINDER COURSE, IL-4.75, N50	TON	746	746										
40603235	POLYMERIZED HOT-MIXASPHALT BINDER COURSE, IL-19.0, N70	TON	1819	1741	78									
40604050	HOT-MIX ASPHALT SURFACE COURSE, IL-9.5, MIX"C", N50	TON	234	54									180	
40605034	POLYMERIZED HOT-MIX ASPHALT SURFACE COURSE, STONE MATRIX ASPHALT, 12.5, MIX"E", N80	TON	25 77	2499	78									
42300200	PORTLAND CEMENT CONCRETE DRIVEWAY PAVEMENT, 6 INCH	SQ YD	446	366									80	
42300400	PORTLAND CEMENT CONCRETE DRIVEWAY PAVEMENT, 8 INCH	SQ YD	1185	1185										

MODEL: Summary Sheet 2
FILE NAME: V:\4216 - IL 9 Bloomington\CAD\CADD Sheets\247855-sht SOQ.dgn

Hutchison Engineering, Inc.

USER NAME = BDeCrane	DESIGNED -	REVISED -
	DRAWN -	REVISED -
PLOT SCALE = 0.16666633'/in.	CHECKED -	REVISED -
PLOT DATE = 11/17/2023	DATE -	REVISED -

STATE OF ILLINOIS
DEPARTMENT OF TRANSPORTATION

FAP 693 (IL RTE 9)
SUMMARY OF QUANTITIES

SCALE: N/A | SHEET 2 OF 15 SHEETS! STA. TO STA.

FAP. RTE.	SECTION	COUNTY	TOTAL SHEETS:	SHEET NO.
693	(129)RS-4	McLEAN	218	5
		CONTRACT NO. 70855		
	ILLINOIS FED. AID PROJECT			

REV. 12/12/23 REV. 12/1/23

	CODE NO.	ITEM	UNIT	TOTAL QUANTITY	CONSTRUCTION CODE: FAP 693 (ILL 9 / US 150) URBAN OTHER PRINCIPAL ARTERIAL STA 62+75.64 TO STA 91+41. 70 (MARKET ST) STA 0+00.00 TO STA 3+01. 27 (HINSHAW AVE) MCLEAN COUNTY NHPP 80% FEDERAL / 20% STATE 0005	CONSTRUCTION CODE: FAP 693 (MARKET ST) URBAN OTHER PRINCIPAL ARTERIAL MILL AND RESURFACE PARKING LANE MCLEAN COUNTY 50% STATE / 50% CITY 0005	CONSTRUCTION CODE: SN 057-0190 URBAN OTHER PRINCIPAL ARTERIAL STA 67+94.50 MCLEAN COUNTY 100% STATE 0047	CONSTRUCTION CODE: FAP 693 (MARKET ST & MLK DR) URBAN OTHER PRINCIPAL ARTERIAL STA 64+81. 79 MCLEAN COUNTY NHPP 80% FEDERAL / 10% STATE / 10% CITY 0021	CONSTRUCTION CODE: FAP 693 (MARKET ST & CAROLINE ST) URBAN OTHER PRINCIPAL ARTERIAL STA 72+26.03 MCLEAN COUNTY NHPP 80% FEDERAL / 10% STATE / 10% CITY 0021	CONSTRUCTION CODE: FAP 693 (MARKET ST & BROWN ST) URBAN OTHER PRINCIPAL ARTERIAL STA 78+29.91 MCLEAN COUNTY NHPP 80% FEDERAL / 13.3% STATE / 6 .7% CITY 0021	CONSTRUCTION CODE: FAP 693 (MARKET ST & HINSHAW AVE) URBAN OTHER PR INC IPAL ARTERIAL STA 90+76.51 MCLEAN COUNTY NHPP 80% FEDERAL / 10% STATE / 10% CITY 0021	CONSTRUCTION CODE: FAP 693 (MARKET ST) URBAN OTHER PRINCIPAL ARTERIAL SIGNAL PRE-EMPT! ON / SIGNAL PAINTING MCLEAN COUNTY 100% CITY 0021	CONSTRUCTION CODE: FAU 6385 (WHITE OAK RD) URBAN MAJOR COLLECTOR STA 200+00.00 TO 205+33.83 MCLEAN COUNTY STP-50-200K 80% FEDERAL / 20% STATE 0004	CONSTRUCTION CODE: FAU 6373 (LOCUST ST) URBAN MINOR ARTERIAL STA 100+00.00 TO 1+00.00 MCLEAN COUNTY STP-50-200K 80% FEDERAL / 20% STATE 0021
	42400200	PORTLAND CEMENT CONCRETE SIDEWALK 5 INCH	SQ FT	42573	40494									2079	
*	42400800	DETECTABLE WARNINGS	SQ FT	654	607									47	
	44000100	PAVEMENT REMOVAL	SQ YD	2847	995									1852	
	44000157	HOT-MIX ASPHALT SURFACE REMOVAL, 2"	SQ YD	114 71	10777	694									
	44000161	HOT-MIX ASPHALT SURFACE REMOVAL, 3"	SQ YD	2451	2451										
	44000169	HOT-MIX ASPHALT SURFACE REMOVAL, 5"	SQ YD	17			17								
	44000200	DRIVEWAY PAVEMENT REMOVAL	SQ YD	1915	1835									80	
	44000300	CURB REMOVAL	FOOT	609	609										
	44000500	COMBINATION CURB AND GUTTER REMOVAL	FOOT	7497	6407									1090	
	44000600	SIDEWALK REMOVAL	SQ FT	23254	21621									1633	
	44200050	WELDED WIRE REINFORCEMENT	SQ YD	271	271										
	44200966	CLASS B PATCHES, TYPE I, 10 INCH	SQ YD	84	84										
	44200970	CLASS B PATCHES, TYPE II, 10 INCH	SQ YD	155	155										
	44200974	CLASS B PATCHES, TYPE III, 10 INCH	SQ YD	173	173										

*= SPECIALTY ITEM

CODE NO.	ITEM	UNIT	TOTAL QUANTITY	CONSTRUCTION CODE: FAP 693 (ILL 9 / US 150) URBAN OTHER PRINCIPAL ARTERIAL STA 62+75.64 TO STA 91+41. 70 (MARKET ST) STA 0+00.00 TO STA 3+01. 27 (HINSHAW AVE) MCLEAN COUNTY NHPP 80% FEDERAL / 20% STATE 0005	FAP 693 (MARKET ST) URBAN OTHER PRINCIPAL ARTERIAL MILL AND RESURFACE PARKING LANE MCLEAN COUNTY 50% STATE / 50% CITY 0005	SN 057-0190 URBAN OTHER PRINCIPAL ARTERIAL STA 67+94.50 MCLEAN COUNTY 100% STATE 0047	FAP 693 (MARKET ST & MLK DR) URBAN OTHER PRINCIPAL ARTERIAL STA 64+81. 79 MCLEAN COUNTY NHPP 80% FEDERAL / 10% STATE / 10% CITY 0021	FAP 693 (MARKET ST & CAROLINE ST) URBAN OTHER PRINCIPAL ARTERIAL STA 72+26.03 MCLEAN COUNTY NHPP 80% FEDERAL / 10% STATE / 10% CITY 0021	FAP 693 (MARKET ST & BROWN ST) URBAN OTHER PRINCIPAL ARTERIAL STA 78+29.91 MCLEAN COUNTY NHPP 80% FEDERAL / 13.3% STATE / 6 .7% CITY 0021	FAP 693 (MARKET ST & HINSHAW AVE) URBAN OTHER PR INC IPAL ARTERIAL STA 90+76.51 MCLEAN COUNTY NHPP 80% FEDERAL / 10% STATE / 10% CITY 0021	FAP 693 (MARKET ST) URBAN OTHER PRINCIPAL ARTERIAL SIGNAL PRE-EMPT! ON / SIGNAL PAINTING MCLEAN 100% CITY 0021	FAU 6385 (WHITE OAK RD) URBAN MAJOR COLLECTOR STA 200+00.00 TO 205+33.83 MCLEAN COUNTY STP-50-200K COUNTY 80% FEDERAL /20% STATE 0004	FAU 6373 (LOCUST ST) URBAN MINOR ARTERIAL STA 100+00.00 TO 1+00.00 MCLEAN COUNTY STP-50-200K 80% FEDERAL / 20% STATE 0021
44200976	CLASS B PATCHES, TYPE IV, 10 INCH	SQ YD	118	118									
44201297	DOWEL BARS 1"	EACH	280	280									
44201761	CLASS D PATCHES, TYPE I, 10 INCH	SQ YD	102	102									
44201765	CLASS D PATCHES, TYPE II, 10 INCH	SQ YD	118	118									
44201769	CLASS D PATCHES, TYPE III, 10 INCH	SQ YD	119	119									
44201771	CLASS D PATCHES, TYPE IV, 10 INCH	SQ YD	102	102									
44213200	S A W CUTS	FOOT	809	809									
44213202	TIE BARS 1"	EACH	62	62									
50102400	CONCRETE REMOVAL	CU YD	7.0			7 .0							
50200100	STRUCTURE EXCAVATION	CU YD	125	125									
50300100	FLOOR DRAINS	EACH	3			3							
50300255	CONCRETE SUPERSTRUCTURE	CU YD	42.2			42.2							
50300260	BRIDGE DECK GROOVING	SQ YD	122			122							
50300300	PROTECTIVE COAT	SQ YD	218			218							

MODEL: Summary Sheet 4
FILE NAME: V:\4216 - IL 9 Bloomington\CADD\CADD Sheets\D570855-sht-SOQ.dgn

Hutchison Engineering, Inc.

USER NAME = BDeCraene	DESIGNED -	REVISED -	
	DRAWN -	REVISED -	
PLOT SCALE = 0.16666633'/in.	CHECKED -	REVISED -	
PLOT DATE = 10/27/2023	DATE -	REVISED -	

STATE OF ILLINOIS
DEPARTMENT OF TRANSPORTATION

FAP 693 (IL RTE 9)
SUMMARY OF QUANTITIES

SCALE: N/A | SHEET 4 OF 15 SHEETS! STA. TO STA.

FAP. RTE.	SECTION	COUNTY	TOTAL SHEETS:	SHEET NO.
693	(129)RS-4	McLEAN	218	7

CONTRACT NO. 70855

ILLINOIS FED. AID PROJECT

REV. 12/1/23

CODE NO.	ITEM	UNIT	TOTAL QUANTITY	CONSTRUCTION CODE: FAP 693 (ILL 9 / US 150) URBAN OTHER PRINCIPAL ARTERIAL STA 62+75.64 TO STA 91+41. 70 (MARKET ST) STA 0+00.00 TO STA 3+01. 27 (HINSHAW AVE) MCLEAN COUNTY NHPP 80% FEDERAL / 20% STATE 0005	CONSTRUCTION CODE: FAP 693 (MARKET ST) URBAN OTHER PRINCIPAL ARTERIAL MILL AND RESURFACE PARKING LANE MCLEAN COUNTY 50% STATE / 50% CITY 0005	CONSTRUCTION CODE: SN 057-0190 URBAN OTHER PRINCIPAL ARTERIAL STA 67+94.50 MCLEAN COUNTY 100% STATE 0047	CONSTRUCTION CODE: FAP 693 (MARKET ST & MLK DR) URBAN OTHER PRINCIPAL ARTERIAL STA 64+81. 79 MCLEAN COUNTY NHPP 80% FEDERAL / 10% STATE / 10% CITY 0021	CONSTRUCTION CODE: FAP 693 (MARKET ST & CAROLINE ST) URBAN OTHER PRINCIPAL ARTERIAL STA 72+26.03 MCLEAN COUNTY NHPP 80% FEDERAL / 10% STATE / 10% CITY 0021	CONSTRUCTION CODE: FAP 693 (MARKET ST & BROWN ST) URBAN OTHER PRINCIPAL ARTERIAL STA 78+29.91 MCLEAN COUNTY NHPP 80% FEDERAL / 13.3% STATE / 6 .7% CITY 0021	CONSTRUCTION CODE: FAP 693 (MARKET ST & HINSHAW AVE) URBAN OTHER PR INC IPAL ARTERIAL STA 90+76.51 MCLEAN COUNTY NHPP 80% FEDERAL / 10% STATE / 10% CITY 0021	CONSTRUCTION CODE: FAP 693 (MARKET ST) URBAN OTHER PRINCIPAL ARTERIAL SIGNAL PRE-EMPT! ON / SIGNAL PAINTING MCLEAN COUNTY 100% CITY 0021	CONSTRUCTION CODE: FAU 6385 (WHITE OAK RD) URBAN MAJOR COLLECTOR STA 200+00.00 TO 205+33.83 MCLEAN COUNTY STP-50-200K 80% FEDERAL / 20% STATE 0004	CONSTRUCTION CODE: FAU 6373 (LOCUST ST) URBAN MINOR ARTERIAL STA 100+00.00 TO 1+00.00 MCLEAN COUNTY STP-50-200K 80% FEDERAL / 20% STATE 0021
50800105	REINFORCEMENT BARS	POUND	4820	4820										
50800205	REINFORCEMENT BARS, EPOXY COATED	POUND	4940			4940								
50800515	BAR SPLICERS	EACH	53			53								
50800530	MECHANICAL SPLICERS	EACH	253			253								
50900105	ALUMINUM RAILING, TYPE L	FOOT	75			75								
52200900	CONCRETE STRUCTURES (RETAINING WALL)	CUYD	79 . 5	79.5										
54213657	PRECAST REINFORCED CONCRETE FLARED END SECTIONS 12"	EACH	1	1										
550A0050	STORM SEWERS, CLASS A, TYPE 1 12"	FOOT	292	194									98	
550A0070	STORM SEWERS, CLASS A, TYPE 1 15"	FOOT	94	94										
550A0340	STORM SEWERS, CLASS A, TYPE 2 12"	FOOT	258	226									32	
55100500	STORM SEWER REMOVAL 12"	FOOT	141	108									33	
55100700	STORM SEWER REMOVAL 15"	FOOT	184	184										
56109210	WATER VALVES TO BE ADJUSTED	EACH	18	18										
58600101	GRANULAR BACKFILL FOR STRUCTURES	CU YD	92	92										

MODEL: Summary Sheet 5
FILE NAME: V:\4216 - IL 9 Bloomington\CAD\CADD Sheets\247855-sht SOQ.dgn

Hutchison Engineering, Inc.

USER NAME = BDeCrane	DESIGNED -	REVISED -
	DRAWN -	REVISED -
PLOT SCALE = 0.16666633'/in.	CHECKED -	REVISED -
PLOT DATE = 10/27/2023	DATE -	REVISED -

STATE OF ILLINOIS
DEPARTMENT OF TRANSPORTATION

FAP 693 (IL RTE 9)
SUMMARY OF QUANTITIES

SCALE: N/A | SHEET 5 OF 15 SHEETS! STA. TO STA.

FAP. RTE.	SECTION	COUNTY	TOTAL SHEETS:	SHEET NO.
693	(129)RS-4	McLEAN	218	8
		CONTRACT NO. 70855		
	! ILLINOIS ! FED. AID PROJECT			

REV. 12/12/23REV. 12/1/23

CODE NO.	ITEM	UNIT	TOTAL QUANTITY	CONSTRUCTION CODE: FAP 693 (ILL 9 / US 150) URBAN OTHER PRINCIPAL ARTERIAL STA 62+75.64 TO STA 91+41. 70 (MARKET ST) STA 0+00.00 TO STA 3+01. 27 (HINSHAW AVE) MCLEAN COUNTY NHPP 80% FEDERAL / 20% STATE 0005	FAP 693 (MARKET ST) URBAN OTHER PRINCIPAL ARTERIAL MILL AND RESURFACE PARKING LANE MCLEAN COUNTY 50% STATE / 50% CITY 0005	SN 057-0190 URBAN OTHER PRINCIPAL ARTERIAL STA 67+94.50 MCLEAN COUNTY 100% STATE 0047	FAP 693 (MARKET ST & MLK DR) URBAN OTHER PRINCIPAL ARTERIAL STA 64+81. 79 MCLEAN COUNTY NHPP 80% FEDERAL / 10% STATE / 10% CITY 0021	FAP 693 (MARKET ST & CAROLINE ST) URBAN OTHER PRINCIPAL ARTERIAL STA 72+26.03 MCLEAN COUNTY NHPP 80% FEDERAL / 10% STATE / 10% CITY 0021	FAP 693 (MARKET ST & BROWN ST) URBAN OTHER PRINCIPAL ARTERIAL STA 78+29.91 MCLEAN COUNTY NHPP 80% FEDERAL / 13.3% STATE / 6.7% CITY 0021	FAP 693 (MARKET ST & HINSHAW AVE) URBAN OTHER PR INC IPAL ARTERIAL STA 90+76.51 MCLEAN COUNTY NHPP 80% FEDERAL / 10% STATE / 10% CITY 0021	FAP 693 (MARKET ST) URBAN OTHER PRINCIPAL ARTERIAL SIGNAL PRE-EMPT! ON / SIGNAL PAINTING MCLEAN 100% CITY 0021	FAU 6385 (WHITE OAK RD) URBAN MAJOR COLLECTOR STA 200+00.00 TO 205+33.83 MCLEAN COUNTY STP-50-200K COUNTY 80% FEDERAL /20% STATE 0004	FAU 6373 (LOCUST ST) URBAN MINOR ARTERIAL STA 100+00.00 TO 1+00.00 MCLEAN COUNTY STP-50-200K 80% FEDERAL / 20% STATE 0021
59100100	GEOCOMPOSITE WALL DRAIN	SQ YD	102	102										
60218400	MANHOLES, TYPE A, 4'-DIAMETER, TYPE 1 FRAME, CLOSED LID	EACH	1										1	
60218500	MANHOLES, TYPE A, 4'-DIAMETER, TYPE 3 FRAME AND GRATE	EACH	1										1	
60235700	INLETS, TYPE A, TYPE 3 FRAME AND GRATE	EACH	16	13									3	
60240220	INLETS, TYPE B, TYPE 3 FRAME AND GRATE	EACH	6	3									3	
60255700	MANHOLES TO BE ADJUSTED WITH NEW TYPE 1 FRAME, OPEN LID	EACH	14	13									1	
60255800	MANHOLES TO BE ADJUSTED WITH NEW TYPE 1 FRAME, CLOSED LID	EACH	4	4										
60260300	INLETS TO BE ADJUSTED WITH NEW TYPE 1 FRAME, OPEN LID	EACH	3	3										
60260500	INLETS TO BE ADJUSTED WITH NEW TYPE 3 FRAME AND GRATE	EACH	14	13									1	
60500060	REMOVING INLETS	EACH	17	14									3	
60604400	COMBINATION CONCRETE CURB AND GUTTER, TYPE B-6.18	FOOT	1516	394									1122	
60604500	COMBINATION CONCRETE CURB AND GUTTER, TYPE B-6.18 (ABUTTING EXISTING PAVEMENT)	FOOT	4373	4373										
60605000	COMBINATION CONCRETE CURB AND GUTTER, TYPE B-6.24	FOOT	545	545										
60605100	COMBINATION CONCRETE CURB AND GUTTER, TYPE B-6.24 (ABUTTING EXISTING PAVEMENT)	FOOT	1435	1435										

MODEL: Summary Sheet 6
FILE NAME: V:\4216 - IL 9 Bloomington\CAD\CADD Sheets\0470855-sht SOQ.dgn

Hutchison Engineering, Inc.

USER NAME = BDeCrane	DESIGNED -	REVISED -
	DRAWN -	REVISED -
PLOT SCALE = 0.16666633'/in.	CHECKED -	REVISED -
PLOT DATE = 10/27/2023	DATE -	REVISED -

STATE OF ILLINOIS
DEPARTMENT OF TRANSPORTATION

FAP 693 (IL RTE 9)
SUMMARY OF QUANTITIES

SCALE: N/A | SHEET 6 OF 15 SHEETS! STA. TO STA.

FAP. RTE.	SECTION	COUNTY	TOTAL SHEETS:	SHEET NO.
693	(129)RS-4	McLEAN	218	9
		CONTRACT NO. 70855		
	! ILLINOIS ! FED. AID PROJECT			

REV. 12/12/23 REV. 12/1/23

	CODE NO.	ITEM	UNIT	TOTAL QUANTITY	CONSTRUCTION CODE: FAP 693 (ILL 9 / US 150) URBAN OTHER PRINCIPAL ARTERIAL STA 62+75.64 TO STA 91+41. 70 (MARKET ST) STA 0+00.00 TO STA 3+01. 27 (HINSHAW AVE) MCLEAN COUNTY NHPP 80% FEDERAL / 20% STATE 0005	CONSTRUCTION CODE: FAP 693 (MARKET ST) URBAN OTHER PRINCIPAL ARTERIAL MILL AND RESURFACE PARKING LANE MCLEAN COUNTY 50% STATE / 50% CITY 0005	CONSTRUCTION CODE: SN 057-0190 URBAN OTHER PRINCIPAL ARTERIAL STA 67+94.50 MCLEAN COUNTY 100% STATE 0047	CONSTRUCTION CODE: FAP 693 (MARKET ST & MLK DR) URBAN OTHER PRINCIPAL ARTERIAL STA 64+81. 79 MCLEAN COUNTY NHPP 80% FEDERAL / 10% STATE / 10% CITY 0021	CONSTRUCTION CODE: FAP 693 (MARKET ST & CAROLINE ST) URBAN OTHER PRINCIPAL ARTERIAL STA 72+26.03 MCLEAN COUNTY NHPP 80% FEDERAL / 10% STATE / 10% CITY 0021	CONSTRUCTION CODE: FAP 693 (MARKET ST & BROWN ST) URBAN OTHER PRINCIPAL ARTERIAL STA 78+29.91 MCLEAN COUNTY NHPP 80% FEDERAL / 13.3% STATE / 6 .7% CITY 0021	CONSTRUCTION CODE: FAP 693 (MARKET ST & HINSHAW AVE) URBAN OTHER PR INC IPAL ARTERIAL STA 90+76.51 MCLEAN COUNTY NHPP 80% FEDERAL / 10% STATE / 10% CITY 0021	CONSTRUCTION CODE: FAP 693 (MARKET ST) URBAN OTHER PRINCIPAL ARTERIAL SIGNAL PRE-EMPT! ON / SIGNAL PAINTING MCLEAN COUNTY 100% CITY 0021	CONSTRUCTION CODE: FAU 6385 (WHITE OAK RD) URBAN MAJOR COLLECTOR STA 200+00.00 TO 205+33.83 MCLEAN COUNTY STP-50-200K 80% FEDERAL / 20% STATE 0004	CONSTRUCTION CODE: FAU 6373 (LOCUST ST) URBAN MINOR ARTERIAL STA 100+00.00 TO 1+00.00 MCLEAN COUNTY STP-50-200K 80% FEDERAL / 20% STATE 0021
	60608582	COMBINATION CONCRETE CURB AND GUTTER, TYPE M-4.24	FOOT	39	39										
	60618300	CONCRETE MEDIAN SURFACE, 4 INCH	SQ FT	1375	1375										
*	63000001	STEEL PLATE BEAM GUARDRAIL, TYPE A, 6 FOOT POSTS	FOOT	25.0	25.0										
*	63100085	TRAFFIC BARRIER TERMINAL, TYPE 6	EACH	1	1										
*	63100167	TRAFFIC BARRIER TERMINAL, TYPE 1 (SPECIAL) TANGENT	EACH	1	1										
	63200310	GUARDRAIL REMOVAL	FOOT	113	113										
*	66900200	NON-SPECIAL WASTE DISPOSAL	CU YD	246	246										
*	66900530	SOIL DISPOSAL ANALYSIS	EACH	10	10										
*	66901001	REGULATED SUBSTANCES PRE-CONSTRUCTION PLAN	LSUM	1	1										
*	66901003	REGULATED SUBSTANCES FINAL CONSTRUCTION REPORT	LSUM	1	1										
*	66901006	REGULATED SUBSTANCES MONITORING	CAL DA	10	10										
	67000500	ENGINEERS FIELD OFFICE, TYPE B	CAL MO	14	14										
	67100100	MOBILIZATION	LSUM	1	0.7	0. 1								0.2	
	70107025	CHANGEABLE MESSAGE SIGN	CAL DA	56	56										

MODEL: Summary Sheet 7
FILE NAME: V:\4216 - IL 9 Bloomington\CAD\CADD Sheets\247885S-sht SOQ.dgn

Hutchison Engineering, Inc.

USER NAME = BDeCrane	DESIGNED -	REVISED -
	DRAWN -	REVISED -
PLOT SCALE = 0.16666633'/in.	CHECKED -	REVISED -
PLOT DATE = 10/27/2023	DATE -	REVISED -

STATE OF ILLINOIS
DEPARTMENT OF TRANSPORTATION

FAP 693 (IL RTE 9)
SUMMARY OF QUANTITIES

SCALE: N/A | SHEET 7 OF 15 SHEETS! STA. TO STA.

FAP. RTE.	SECTION	COUNTY	TOTAL SHEETS:	SHEET NO.
693	(129)RS-4	McLEAN	218	10
		CONTRACT NO. 70855		
	ILLINOIS FED. AID PROJECT			

REV. 12/12/23 REV. 12/1/23

				CONSTRUCTION CODE									
CODE NO.	ITEM	UNIT	TOTAL QUANTITY	FAP 693 (ILL 9 / US 150) URBAN OTHER PRINCIPAL ARTERIAL STA 62+75.64 TO STA 91+41. 70 (MARKET ST) STA 0+00.00 TO STA 3+01. 27 (HINSHAW AVE) MCLEAN COUNTY NHPP 80% FEDERAL / 20% STATE 0005	FAP 693 (MARKET ST) URBAN OTHER PRINCIPAL ARTERIAL MILL AND RESURFACE PARKING LANE MCLEAN COUNTY 50% STATE / 50% CITY 0005	SN 057-0190 URBAN OTHER PRINCIPAL ARTERIAL STA 67+94.50 MCLEAN COUNTY 100% STATE 0047	FAP 693 (MARKET ST & MLK DR) URBAN OTHER PRINCIPAL ARTERIAL STA 64+81. 79 MCLEAN COUNTY NHPP 80% FEDERAL / 10% STATE / 10% CITY 0021	FAP 693 (MARKET ST & CAROLINE ST) URBAN OTHER PRINCIPAL ARTERIAL STA 72+26.03 MCLEAN COUNTY NHPP 80% FEDERAL / 10% STATE / 10% CITY 0021	FAP 693 (MARKET ST & BROWN ST) URBAN OTHER PRINCIPAL ARTERIAL STA 78+29.91 MCLEAN COUNTY NHPP 80% FEDERAL / 13.3% STATE / 6 .7% CITY 0021	FAP 693 (MARKET ST & HINSHAW AVE) URBAN OTHER PR INC IPAL ARTERIAL STA 90+76.51 MCLEAN COUNTY NHPP 80% FEDERAL / 10% STATE / 10% CITY 0021	FAP 693 (MARKET ST) URBAN OTHER PRINCIPAL ARTERIAL SIGNAL PRE-EMPT! ON / SIGNAL PAINTING MCLEAN COUNTY 100% CITY 0021	FAU 6385 (WHITE OAK RD) URBAN MAJOR COLLECTOR STA 200+00.00 TO 205+33.83 MCLEAN COUNTY STP-50-200K 80% FEDERAL / 20% STATE 0004	FAU 6373 (LOCUST ST) URBAN MINOR ARTERIAL STA 100+00.00 TO 1+00.00 MCLEAN COUNTY STP-50-200K 80% FEDERAL / 20% STATE 0021
70300100	SHORT TERM PAVEMENT MARKING	FOOT	17495	14438								2273	784
70300150	SHORT TERM PAVEMENT MARKING REMOVAL	SQ FT	7107	6003								783	321
70300211	TEMPORARY PAVEMENT MARKING LETTERS AND SYMBOLS -PAINT	SQ FT	747.4	716. 2								31. 2	
70300221	TEMPORARY PAVEMENT MARKING -LINE 4"-PAINT	FOOT	12301	11281								187	833
70300241	TEMPORARY PAVEMENT MARKING -LINE 6"-PAINT	FOOT	2506	2347									159
70300261	TEMPORARY PAVEMENT MARKING -LINE 12"-PAINT	FOOT	1475	1475									
70300281	TEMPORARY PAVEMENT MARKING -LINE 24"-PAINT	FOOT	623	572								15	36
70306120	TEMPORARY PAVEMENT MARKING -LINE 4"-TYPE IITAPE	FOOT	1332			1332							
* 72000100	SIGN PANEL -TYPE 1	SQ FT	109				38	21	12	38			
* 72000200	SIGN PANEL -TYPE 2	SQ FT	165				55	45	20	45			
* 72400500	RELOCATE SIGN PANEL ASSEMBLY -TYPE A	EACH	7	7									
* 72501000	TERMINAL MARKER- DIRECT APPLIED	EACH	1	1									
* 72900100	METAL POST -TYPE A	FOOT	48	48									
* 78000100	THERMOPLASTIC PAVEMENT MARKING -LETTERS AND SYMBOLS	SQ FT	747.4	716. 2								31. 2	

*= SPECIALTY ITEM

MODEL: Summary Sheet 8
FILE NAME: V:\4216 - IL 9 Bloomington\CAD\CADD Sheets\247855-sht SOQ.dgn

Hutchison Engineering, Inc.

USER NAME = BDeCrane	DESIGNED -	REVISED -
	DRAWN -	REVISED -
PLOT SCALE = 0.16666633'/in.	CHECKED -	REVISED -
PLOT DATE = 10/27/2023	DATE -	REVISED -

STATE OF ILLINOIS
DEPARTMENT OF TRANSPORTATION

FAP 693 (IL RTE 9)
SUMMARY OF QUANTITIES

SCALE: N/A | SHEET 8 OF 15 SHEETS! STA. TO STA.

FAP. RTE.	SECTION	COUNTY	TOTAL SHEETS:	SHEET NO.
693	(129)RS-4	McLEAN	218	1
		CONTRACT NO. 70855		
	ILLINOIS FED. AID PROJECT			

REV. 12/12/23 REV. 12/1/23

	CODE NO.	ITEM	UNIT	TOTAL QUANTITY	CONSTRUCTION CODE: FAP 693 (ILL 9 / US 150) URBAN OTHER PRINCIPAL ARTERIAL STA 62+75.64 TO STA 91+41. 70 (MARKET ST) STA 0+00.00 TO STA 3+01. 27 (HINSHAW AVE) MCLEAN COUNTY NHPP 80% FEDERAL / 20% STATE 0005	FAP 693 (MARKET ST) URBAN OTHER PRINCIPAL ARTERIAL MILL AND RESURFACE PARKING LANE MCLEAN COUNTY 50% STATE / 50% CITY 0005	SN 057-0190 URBAN OTHER PRINCIPAL ARTERIAL STA 67+94.50 MCLEAN COUNTY 100% STATE 0047	FAP 693 (MARKET ST & MLK DR) URBAN OTHER PRINCIPAL ARTERIAL STA 64+81. 79 MCLEAN COUNTY NHPP 80% FEDERAL / 10% STATE / 10% CITY 0021	FAP 693 (MARKET ST & CAROLINE ST) URBAN OTHER PRINCIPAL ARTERIAL STA 72+26.03 MCLEAN COUNTY NHPP 80% FEDERAL / 10% STATE / 10% CITY 0021	FAP 693 (MARKET ST & BROWN ST) URBAN OTHER PRINCIPAL ARTERIAL STA 78+29.91 MCLEAN COUNTY NHPP 80% FEDERAL / 13.3% STATE / 6.7% CITY 0021	FAP 693 (MARKET ST & HINSHAW AVE) URBAN OTHER PR INC IPAL ARTERIAL STA 90+76.51 MCLEAN COUNTY NHPP 80% FEDERAL / 10% STATE / 10% CITY 0021	FAP 693 (MARKET ST) URBAN OTHER PRINCIPAL ARTERIAL SIGNAL PRE-EMPT! ON / SIGNAL PAINTING MCLEAN 100% CITY 0021	FAU 6385 (WHITE OAK RD) URBAN MAJOR COLLECTOR STA 200+00.00 TO 205+33.83 MCLEAN COUNTY STP-50-200K COUNTY 80% FEDERAL /20% STATE 0004	FAU 6373 (LOCUST ST) URBAN MINOR ARTERIAL STA 100+00.00 TO 1+00.00 MCLEAN COUNTY STP-50-200K 80% FEDERAL / 20% STATE 0021
*	78000200	THERMOPLASTIC PAVEMENT MARKING -LINE 4"	FOOT	11413	11039								187	187
*	78000400	THERMOPLASTIC PAVEMENT MARKING -LINE 6"	FOOT	2334	2175									159
*	78000600	THERMOPLASTIC PAVEMENT MARKING -LINE 12"	FOOT	964	964									
*	78000650	THERMOPLASTIC PAVEMENT MARKING -LINE 24"	FOOT	636	585								15	36
*	78009004	MODIFIED URETHANE PAVEMENT MARKING -LINE 4"	FOOT	396	396									
*	78009012	MODIFIED URETHANE PAVEMENT MARKING -LINE 12"	FOOT	382	382									
*	78011000	GROOVING FOR RECESSED PAVEMENT MARKING, LETTERS AND SYMBOLS	SQ FT	747.4	716. 2								31. 2	
*	78011025	GROOVING FOR RECESSED PAVEMENT MARKING 5"	FOOT	11809	11435								187	187
*	78011035	GROOVING FOR RECESSED PAVEMENT MARKING 7"	FOOT	2334	2175									159
*	78011065	GROOVING FOR RECESSED PAVEMENT MARKING 13"	FOOT	1345	1345									
*	78011125	GROOVING FOR RECESSED PAVEMENT MARKING 25"	FOOT	636	585								15	36
*	78100100	RAISED REFLECTIVE PAVEMENT MARKER	EACH	209	209									
*	78200005	GUARDRAIL REFLECTORS, TYPE A	EACH	4	4									
	78300200	RAISED REFLECTIVE PAVEMENT MARKER REMOVAL	EACH	209	209									

*= SPECIALTY ITEM

MODEL: Summary Sheet 9
FILE NAME: V:\4216 - IL 9 Bloomington\CAD\CADD Sheets\247855-sht SOQ.dgn

Hutchison Engineering, Inc.

USER NAME = BDeCrane	DESIGNED -	REVISED -
	DRAWN -	REVISED -
PLOT SCALE = 0.16666633'/in.	CHECKED -	REVISED -
PLOT DATE = 10/27/2023	DATE -	REVISED -

STATE OF ILLINOIS
DEPARTMENT OF TRANSPORTATION

FAP 693 (IL RTE 9)
SUMMARY OF QUANTITIES

SCALE: N/A | SHEET 9 OF 15 SHEETS! STA. TO STA.

FAP. RTE.	SECTION	COUNTY	TOTAL SHEETS:	SHEET NO.
693	(129)RS-4	McLEAN	218	12
		CONTRACT NO. 70855		
	! ILLINOIS ! FED. AID PROJECT			

REV. 12/12/23REV. 12/1/23

	CODE NO.	ITEM	UNIT	TOTAL QUANTITY	CONSTRUCTION CODE: FAP 693 (ILL 9 / US 150) URBAN OTHER PRINCIPAL ARTERIAL STA 62+75.64 TO STA 91+41. 70 (MARKET ST) STA 0+00.00 TO STA 3+01. 27 (HINSHAW AVE) MCLEAN COUNTY NHPP 80% FEDERAL / 20% STATE 0005	FAP 693 (MARKET ST) URBAN OTHER PRINCIPAL ARTERIAL MILL AND RESURFACE PARKING LANE MCLEAN COUNTY 50% STATE / 50% CITY 0005	SN 057-0190 URBAN OTHER PRINCIPAL ARTERIAL STA 67+94.50 MCLEAN COUNTY 100% STATE 0047	FAP 693 (MARKET ST & MLK DR) URBAN OTHER PRINCIPAL ARTERIAL STA 64+81. 79 MCLEAN COUNTY NHPP 80% FEDERAL / 10% STATE / 10% CITY 0021	FAP 693 (MARKET ST & CAROLINE ST) URBAN OTHER PRINCIPAL ARTERIAL STA 72+26.03 MCLEAN COUNTY NHPP 80% FEDERAL / 10% STATE / 10% CITY 0021	FAP 693 (MARKET ST & BROWN ST) URBAN OTHER PRINCIPAL ARTERIAL STA 78+29.91 MCLEAN COUNTY NHPP 80% FEDERAL / 13.3% STATE / 6 .7% CITY 0021	FAP 693 (MARKET ST & HINSHAW AVE) URBAN OTHER PR INC IPAL ARTERIAL STA 90+76.51 MCLEAN COUNTY NHPP 80% FEDERAL / 10% STATE / 10% CITY 0021	FAP 693 (MARKET ST) URBAN OTHER PRINCIPAL ARTERIAL SIGNAL PRE-EMPT! ON / SIGNAL PAINTING MCLEAN COUNTY 100% CITY 0021	FAU 6385 (WHITE OAK RD) URBAN MAJOR COLLECTOR STA 200+00.00 TO 205+33.83 MCLEAN COUNTY STP-50-200K 80% FEDERAL / 20% STATE 0004	FAU 6373 (LOCUST ST) URBAN MINOR ARTERIAL STA 100+00.00 TO 1+00.00 MCLEAN COUNTY STP-50-200K 80% FEDERAL / 20% STATE 0021
	78300202	PAVEMENT MARKING REMOVAL -WATER BLASTING	SQ FT	17544	15676								202	1666
*	80500010	SERVICE INSTALLATION -GROUND MOUNTED	EACH	4				1	1	1	1			
*	81028350	UNDERGROUND CONDUIT, PVC, 2" DIA.	FOOT	3290				284	969	753	1284			
*	81028360	UNDERGROUND CONDUIT, PVC, 2 1/2" DIA.	FOOT	439				66	322	19	32			
*	81028370	UNDERGROUND CONDUIT, PVC, 3" DIA.	FOOT	249				90		77	82			
*	81028380	UNDERGROUND CONDUIT, PVC, 3 1/2" DIA.	FOOT	260					89	171				
*	81028390	UNDERGROUND CONDUIT, PVC, 4" DIA.	FOOT	338				144	20	44	130			
*	81028400	UNDERGROUND CONDUIT, PVC, 5" DIA.	FOOT	153				74			79			
*	81400100	HANDHOLE	EACH	19				5	4	3	7			
*	81400300	DOUBLE HANDHOLE	EACH	4				1	1	1	1			
*	85000200	MAINTENANCE OF EXISTING TRAFFIC SIGNAL INSTALLATION	EACH	4				1	1	1	1			
	85100500	PAINT NEW TRAFFIC SIGNAL POST	EACH	13								13		
	85100600	PAINT NEW MAST ARM AND POLE, UNDER 40 FOOT	EACH	3								3		
	85100701	PAINT NEW MAST ARM AND POLE, 40 FOOT AND OVER	EACH	3								3		

*= SPECIALTY ITEM

MODEL: Summary Sheet 10
FILE NAME: V:\4216 - IL 9 Bloomington\CADD\CADD Sheets\D570855-sht-SOQ.dgn

Hutchison Engineering, Inc.

USER NAME = BDeCraene	DESIGNED -	REVISED -	
	DRAWN -	REVISED -	
PLOT SCALE = 0.16666633'/in.	CHECKED -	REVISED -	
PLOT DATE = 10/27/2023	DATE -	REVISED -	

STATE OF ILLINOIS
DEPARTMENT OF TRANSPORTATION

FAP 693 (IL RTE 9)
SUMMARY OF QUANTITIES

SCALE: N/A | SHEET 10 OF 15 SHEETS | STA. TO STA.

FAP. RTE.	SECTION	COUNTY	TOTAL SHEETS:	SHEET NO.
693	(129)RS-4	McLEAN	218	13

CONTRACT NO. 70855

ILLINOIS FED. AID PROJECT

REV. 12/12/23 REV. 12/1/23

					CONSTRUCTION CODE									
	CODE NO.	ITEM	UNIT	TOTAL QUANTITY	FAP 693 (ILL 9 / US 150) URBAN OTHER PRINCIPAL ARTERIAL STA 62+75.64 TO STA 91+41. 70 (MARKET ST) STA 0+00.00 TO STA 3+01. 27 (HINSHAW AVE) MCLEAN COUNTY NHPP 80% FEDERAL / 20% STATE 0005	FAP 693 (MARKET ST) URBAN OTHER PRINCIPAL ARTERIAL MILL AND RESURFACE PARKING LANE MCLEAN COUNTY 50% STATE / 50% CITY 0005	SN 057-0190 URBAN OTHER PRINCIPAL ARTERIAL STA 67+94.50 MCLEAN COUNTY 100% STATE 0047	FAP 693 (MARKET ST & MLK DR) URBAN OTHER PRINCIPAL ARTERIAL STA 64+81. 79 MCLEAN COUNTY NHPP 80% FEDERAL / 10% STATE / 10% CITY 0021	FAP 693 (MARKET ST & CAROLINE ST) URBAN OTHER PRINCIPAL ARTERIAL STA 72+26.03 MCLEAN COUNTY NHPP 80% FEDERAL / 10% STATE / 10% CITY 0021	FAP 693 (MARKET ST & BROWN ST) URBAN OTHER PRINCIPAL ARTERIAL STA 78+29.91 MCLEAN COUNTY NHPP 80% FEDERAL / 13.3% STATE / 6 .7% CITY 0021	FAP 693 (MARKET ST & HINSHAW AVE) URBAN OTHER PR INC IPAL ARTERIAL STA 90+76.51 MCLEAN COUNTY NHPP 80% FEDERAL / 10% STATE / 10% CITY 0021	FAP 693 (MARKET ST) URBAN OTHER PRINCIPAL ARTERIAL SIGNAL PRE-EMPT! ON / SIGNAL PAINTING MCLEAN COUNTY 100% CITY 0021	FAU 6385 (WHITE OAK RD) URBAN MAJOR COLLECTOR STA 200+00.00 TO 205+33.83 MCLEAN COUNTY STP-50-200K 80% FEDERAL / 20% STATE 0004	FAU 6373 (LOCUST ST) URBAN MINOR ARTERIAL STA 100+00.00 TO 1+00.00 MCLEAN COUNTY STP-50-200K 80% FEDERAL / 20% STATE 0021
	85100800	PAINT NEW COMBINATION MAST ARM AND POLE, UNDER 40 FOOT	EACH	3								3		
	85100901	PAINT NEW COMBINATION MAST ARM AND POLE, 40 FOOT AND OVER	EACH	5								5		
*	85700300	FULL-ACTUATED CONTROLLER AND TYPE V CABINET	EACH	4				1	1	1	1			
*	86200200	UNINTERRUPTABLE POWER SUPPLY, STANDARD	EACH	4				1	1	1	1			
*	87300925	ELECTRIC CABLE IN CONDUIT, TRACER, NO. 141C	FOOT	3856				947	843	684	1382			
*	87301215	ELECTRIC CABLE IN CONDUIT, SIGNAL NO. 14 2C	FOOT	5345				2259	948	643	1495			
*	87301225	ELECTRIC CABLE IN CONDUIT, SIGNAL NO. 14 3C	FOOT	5640				2212	962	979	1487			
*	87301245	ELECTRIC CABLE IN CONDUIT, SIGNAL NO. 14 5C	FOOT	10877				3435	2867	2266	2309			
*	87301255	ELECTRIC CABLE IN CONDUIT, SIGNAL NO. 14 7C	FOOT	5228				1520	854	1099	1755			
*	87301805	ELECTRIC CABLE IN CONDUIT, SERVICE, NO. 6 2C	FOOT	399				132	106	102	59			
*	87301900	ELECTRIC CABLE IN CONDUIT, EQUIPMENT GROUNDING CONDUCTOR, NO. 6 1C	FOOT	2586				718	723	614	531			
*	87502640	TRAFFIC SIGNAL POST, ALUMINUM 10 FT.	EACH	1				1						
*	87502680	TRAFFIC SIGNAL POST, ALUMINUM 14 FT.	EACH	5					2	1	2			
*	87502690	TRAFFIC SIGNAL POST, ALUMINUM 15 FT.	EACH	5				3	1	1				

*= SPECIALTY ITEM

MODEL: Summary Sheet 11
FILE NAME: V:\4216 - IL 9 Bloomington\CAD\CADD Sheets\0470855-sht SOQ.dgn

Hutchison Engineering, Inc.

USER NAME = BDeCrane	DESIGNED -	REVISED -
	DRAWN -	REVISED -
PLOT SCALE = 0.16666633'/in.	CHECKED -	REVISED -
PLOT DATE = 10/27/2023	DATE -	REVISED -

STATE OF ILLINOIS
DEPARTMENT OF TRANSPORTATION

FAP 693 (IL RTE 9)
SUMMARY OF QUANTITIES

SCALE: N/A | SHEET 11 OF 15 SHEETS! STA. TO STA.

FAP. RTE.	SECTION	COUNTY	TOTAL SHEETS:	SHEET NO.
693	(129)RS-4	McLEAN	218	14
		CONTRACT NO. 70855		
	ILLINOIS FED. AID PROJECT			

REV. 12/12/23 REV. 12/1/23

	CODE NO.	ITEM	UNIT	TOTAL QUANTITY	CONSTRUCTION CODE: FAP 693 (ILL 9 / US 150) URBAN OTHER PRINCIPAL ARTERIAL STA 62+75.64 TO STA 91+41. 70 (MARKET ST) STA 0+00.00 TO STA 3+01. 27 (HINSHAW AVE) MCLEAN COUNTY NHPP 80% FEDERAL / 20% STATE 0005	CONSTRUCTION CODE: FAP 693 (MARKET ST) URBAN OTHER PRINCIPAL ARTERIAL MILL AND RESURFACE PARKING LANE MCLEAN COUNTY 50% STATE / 50% CITY 0005	CONSTRUCTION CODE: SN 057-0190 URBAN OTHER PRINCIPAL ARTERIAL STA 67+94.50 MCLEAN COUNTY 100% STATE 0047	CONSTRUCTION CODE: FAP 693 (MARKET ST & MLK DR) URBAN OTHER PRINCIPAL ARTERIAL STA 64+81. 79 MCLEAN COUNTY NHPP 80% FEDERAL / 10% STATE / 10% CITY 0021	CONSTRUCTION CODE: FAP 693 (MARKET ST & CAROLINE ST) URBAN OTHER PRINCIPAL ARTERIAL STA 72+26.03 MCLEAN COUNTY NHPP 80% FEDERAL / 10% STATE / 10% CITY 0021	CONSTRUCTION CODE: FAP 693 (MARKET ST & BROWN ST) URBAN OTHER PRINCIPAL ARTERIAL STA 78+29.91 MCLEAN COUNTY NHPP 80% FEDERAL / 13.3% STATE / 6 .7% CITY 0021	CONSTRUCTION CODE: FAP 693 (MARKET ST & HINSHAW AVE) URBAN OTHER PR INC IPAL ARTERIAL STA 90+76.51 MCLEAN COUNTY NHPP 80% FEDERAL / 10% STATE / 10% CITY 0021	CONSTRUCTION CODE: FAP 693 (MARKET ST) URBAN OTHER PRINCIPAL ARTERIAL SIGNAL PRE-EMPT! ON / SIGNAL PAINTING MCLEAN COUNTY 100% CITY 0021	CONSTRUCTION CODE: FAU 6385 (WHITE OAK RD) URBAN MAJOR COLLECTOR STA 200+00.00 TO 205+33.83 MCLEAN COUNTY STP-50-200K 80% FEDERAL / 20% STATE 0004	CONSTRUCTION CODE: FAU 6373 (LOCUST ST) URBAN MINOR ARTERIAL STA 100+00.00 TO 1+00.00 MCLEAN COUNTY STP-50-200K 80% FEDERAL / 20% STATE 0021
*	87502700	TRAFFIC SIGNAL POST, ALUMINUM 16 FT.	EACH	2				1		1				
*	87600200	PEDESTRIAN PUSH-BUTTON POST, TYPE II	EACH	15				2	4	3	6			
*	87700170	STEEL MAST ARM ASSEMBLY AND POLE, 26 FT.	EACH	1							1			
*	87700190	STEEL MAST ARM ASSEMBLY AND POLE, 30 FT.	EACH	1					1					
*	87700220	STEEL MAST ARM ASSEMBLY AND POLE, 36 FT.	EACH	1							1			
*	87700250	STEEL MAST ARM ASSEMBLY AND POLE, 42 FT.	EACH	2							2			
*	87700270	STEEL MAST ARM ASSEMBLY AND POLE, 46 FT.	EACH	1					1					
*	87702820	STEEL COMBINATION MAST ARM ASSEMBLY AND POLE 18 FT.	EACH	1				1						
*	87702900	STEEL COMBINATION MAST ARM ASSEMBLY AND POLE 34 FT.	EACH	1				1						
*	87702910	STEEL COMBINATION MAST ARM ASSEMBLY AND POLE 36 FT.	EACH	1						1				
*	87702955	STEEL COMBINATION MAST ARM ASSEMBLY AND POLE 45 FT.	EACH	1						1				
*	87702960	STEEL COMBINATION MAST ARM ASSEMBLY AND POLE 46 FT.	EACH	2				1	1					
*	87702980	STEEL COMBINATION MAST ARM ASSEMBLY AND POLE 50 FT.	EACH	1					1					
*	87702990	STEEL COMBINATION MAST ARM ASSEMBLY AND POLE 54 FT.	EACH	1				1						

*= SPECIALTY ITEM

MODEL: Summary Sheet 12
FILE NAME: V:\4216 - IL 9 Bloomington\CAD\CADD Sheets\0478855-sht SOQ.dgn

Hutchison Engineering, Inc.

USER NAME = BDeCrane	DESIGNED -	REVISED -
	DRAWN -	REVISED -
PLOT SCALE = 0.16666633'/in.	CHECKED -	REVISED -
PLOT DATE = 10/27/2023	DATE -	REVISED -

STATE OF ILLINOIS
DEPARTMENT OF TRANSPORTATION

FAP 693 (IL RTE 9)
SUMMARY OF QUANTITIES

SCALE: N/A | SHEET 12 OF 15 SHEETS! STA. TO STA.

FAP. RTE.	SECTION	COUNTY	TOTAL SHEETS:	SHEET NO.
693	(129)RS-4	McLEAN	218	15

CONTRACT NO. 70855

! ILLINOIS ! FED. AID PROJECT

REV. 12/12/23REV. 12/1/23

	CODE NO.	ITEM	UNIT	TOTAL QUANTITY	CONSTRUCTION CODE: FAP 693 (ILL 9 / US 150) URBAN OTHER PRINCIPAL ARTERIAL STA 62+75.64 TO STA 91+41. 70 (MARKET ST) STA 0+00.00 TO STA 3+01. 27 (HINSHAW AVE) MCLEAN COUNTY NHPP 80% FEDERAL / 20% STATE 0005	FAP 693 (MARKET ST) URBAN OTHER PRINCIPAL ARTERIAL MILL AND RESURFACE PARKING LANE MCLEAN COUNTY 50% STATE / 50% CITY 0005	SN 057-0190 URBAN OTHER PRINCIPAL ARTERIAL STA 67+94.50 MCLEAN COUNTY 100% STATE 0047	FAP 693 (MARKET ST & MLK DR) URBAN OTHER PRINCIPAL ARTERIAL STA 64+81. 79 MCLEAN COUNTY NHPP 80% FEDERAL / 10% STATE / 10% CITY 0021	FAP 693 (MARKET ST & CAROLINE ST) URBAN OTHER PRINCIPAL ARTERIAL STA 72+26.03 MCLEAN COUNTY NHPP 80% FEDERAL / 10% STATE / 10% CITY 0021	FAP 693 (MARKET ST & BROWN ST) URBAN OTHER PRINCIPAL ARTERIAL STA 78+29.91 MCLEAN COUNTY NHPP 80% FEDERAL / 13.3% STATE / 6 .7% CITY 0021	FAP 693 (MARKET ST & HINSHAW AVE) URBAN OTHER PR INC IPAL ARTERIAL STA 90+76.51 MCLEAN COUNTY NHPP 80% FEDERAL / 10% STATE / 10% CITY 0021	FAP 693 (MARKET ST) URBAN OTHER PRINCIPAL ARTERIAL SIGNAL PRE-EMPT! ON / SIGNAL PAINTING MCLEAN 100% CITY 0021	FAU 6385 (WHITE OAK RD) URBAN MAJOR COLLECTOR STA 200+00.00 TO 205+33.83 MCLEAN COUNTY STP-50-200K COUNTY 80% FEDERAL /20% STATE 0004	FAU 6373 (LOCUST ST) URBAN MINOR ARTERIAL STA 100+00.00 TO 1+00.00 MCLEAN COUNTY STP-50-200K 80% FEDERAL / 20% STATE 0021
*	87800100	CONCRETE FOUNDATION, TYPE A	FOOT	39				15	9	9	6			
*	87800150	CONCRETE FOUNDATION, TYPE C	FOOT	12				3	3	3	3			
*	87800400	CONCRETE FOUNDATION, TYPE E 30-INCH DIAMETER	FOOT	20				10			10			
*	87800415	CONCRETE FOUNDATION, TYPE E 36-INCH DIAMETER	FOOT	152				39	52	24	37			
*	87900200	DRILL EXISTING HANDHOLE	EACH	4					2		2			
*	88040070	SIGNAL HEAD, POLYCARBONATE, LED, 1-FACE, 3-SECTION, BRACKET MOUNTED	EACH	19				5	6	4	4			
*	88040090	SIGNAL HEAD, POLYCARBONATE, LED, 1-FACE, 3-SECTION, MAST ARM MOUNTED	EACH	27				7	8	4	8			
*	88040110	SIGNAL HEAD, POLYCARBONATE, LED, 1-FACE, 4-SECTION, BRACKET MOUNTED	EACH	9				2	2	1	4			
*	88040120	SIGNAL HEAD, POLYCARBONATE, LED, 1-FACE, 4-SECTION, MAST ARM MOUNTED	EACH	9				2	2	1	4			
*	88040150	SIGNAL HEAD, POLYCARBONATE, LED, 1-FACE, 5-SECTION, BRACKET MOUNTED	EACH	3				1		2				
*	88040160	SIGNAL HEAD, POLYCARBONATE, LED, 1-FACE, 5-SECTION, MAST ARM MOUNTED	EACH	1				1						
*	88102825	PEDESTRIAN SIGNAL HEAD, POLYCARBONATE, LED, 1-FACE, BRACKET MOUNTED WITH COUNT DOWN TIMER	EACH	26				8	6	4	8			
*	88200510	TRAFFIC SIGNAL BACKPLATE, RETROREFLECTIVE	EACH	37				10	10	5	12			
	89502375	REMOVE EXISTING TRAFFIC SIGNAL EQUIPMENT	EACH	4				1	1	1	1			

*= SPECIALTY ITEM

MODEL: Summary Sheet 13
FILE NAME: V:\4216 - IL 9 Bloomington\CAD\CADD Sheets\Q70855-sht SOQ.dgn

Hutchison Engineering, Inc.

USER NAME = BDeCrane	DESIGNED -	REVISED -
	DRAWN -	REVISED -
PLOT SCALE = 0.16666633'/in.	CHECKED -	REVISED -
PLOT DATE = 10/27/2023	DATE -	REVISED -

STATE OF ILLINOIS
DEPARTMENT OF TRANSPORTATION

FAP 693 (IL RTE 9)
SUMMARY OF QUANTITIES

SCALE: N/A | SHEET 13 OF 15 SHEETS! STA. TO STA.

FAP. RTE.	SECTION	COUNTY	TOTAL SHEETS:	SHEET NO.
693	(129)RS-4	McLEAN	218	16

CONTRACT NO. 70855
! ILLINOIS ! FED. AID PROJECT

REV. 12/12/23 REV. 12/1/23

	CODE NO.	ITEM	UNIT	TOTAL QUANTITY	CONSTRUCTION CODE: FAP 693 (ILL 9 / US 150) URBAN OTHER PRINCIPAL ARTERIAL STA 62+75.64 TO STA 91+41. 70 (MARKET ST) STA 0+00.00 TO STA 3+01. 27 (HINSHAW AVE) MCLEAN COUNTY NHPP 80% FEDERAL / 20% STATE 0005	FAP 693 (MARKET ST) URBAN OTHER PRINCIPAL ARTERIAL MILL AND RESURFACE PARKING LANE MCLEAN COUNTY 50% STATE / 50% CITY 0005	SN 057-0190 URBAN OTHER PRINCIPAL ARTERIAL STA 67+94.50 MCLEAN COUNTY 100% STATE 0047	FAP 693 (MARKET ST & MLK DR) URBAN OTHER PRINCIPAL ARTERIAL STA 64+81. 79 MCLEAN COUNTY NHPP 80% FEDERAL / 10% STATE / 10% CITY 0021	FAP 693 (MARKET ST & CAROLINE ST) URBAN OTHER PRINCIPAL ARTERIAL STA 72+26.03 MCLEAN COUNTY NHPP 80% FEDERAL / 10% STATE / 10% CITY 0021	FAP 693 (MARKET ST & BROWN ST) URBAN OTHER PRINCIPAL ARTERIAL STA 78+29.91 MCLEAN COUNTY NHPP 80% FEDERAL / 13.3% STATE / 6 .7% CITY 0021	FAP 693 (MARKET ST & HINSHAW AVE) URBAN OTHER PR INC IPAL ARTERIAL STA 90+76.51 MCLEAN COUNTY NHPP 80% FEDERAL / 10% STATE / 10% CITY 0021	FAP 693 (MARKET ST) URBAN OTHER PRINCIPAL ARTERIAL SIGNAL PRE-EMPT! ON / SIGNAL PAINTING MCLEAN COUNTY 100% CITY 0021	FAU 6385 (WHITE OAK RD) URBAN MAJOR COLLECTOR STA 200+00.00 TO 205+33.83 MCLEAN COUNTY STP-50-200K 80% FEDERAL / 20% STATE 0004	FAU 6373 (LOCUST ST) URBAN MINOR ARTERIAL STA 100+00.00 TO 1+00.00 MCLEAN COUNTY STP-50-200K 80% FEDERAL / 20% STATE 0021
	89502380	REMOVE EXISTING HANDHOLE	EACH	33				11	8	4	10			
	89502382	REMOVE EXISTING DOUBLE HANDHOLE	EACH	4				1	1	1	1			
	89502385	REMOVE EXISTING CONCRETE FOUNDATION	EACH	24				8	7	5	4			
*	B2003867	TREE, MALUS IOENSIS (PRAIRIE CRABAPPLE), CONTAINER GROWN, 15-GALLON	EACH	4				4						
*	X0327149	RELOCATE BENCH	EACH	2				2						
*	X1400006	FIBER OPTIC CABLE INCONDUIT, 12 FIBERS, SINGLE MODE	FOOT	3856				947	843	684	1382			
*	X1400399	VIDEO DETECTION SYSTEM COMPLETE	EACH	4				1	1	1	1			
*	X1400426	MODIFY EXISTING FIBER OPTIC CABINET	EACH	1				1						
*	X4402805	ISLAND REMOVAL	SQ FT	207	207									
*	X5030275	CONCRETE WEARING SURFACE REMOVAL	SQ YD	187			187							
*	X5030305	CONCRETE WEARING SURFACE, 5"	SQ YD	124			124							
*	X5091765	PIPE HANDRAIL (SPECIAL)	FOOT	28	28									
*	X6024503	INLETS TO BE ADJUSTED WITH NEW FRAME AND GRATE (SPECIAL)	EACH	17	17									
*	X6025800	MANHOLES TO BE ADJUSTED WITH NEW TYPE 1 FRAME, CLOSED LID (SPECIAL)	EACH	24	22								2	

*= SPECIALTY ITEM

MODEL: Summary Sheet 14
FILE NAME: V:\4216 - IL 9 Bloomington\CADD\CADD Sheets\D570855-sht-SOQ.dgn

Hutchison Engineering, Inc.

USER NAME = BDeCraene	DESIGNED -	REVISED -	
	DRAWN -	REVISED -	
PLOT SCALE = 0.16666633'/in.	CHECKED -	REVISED -	
PLOT DATE = 10/27/2023	DATE -	REVISED -	

STATE OF ILLINOIS
DEPARTMENT OF TRANSPORTATION

FAP 693 (IL RTE 9)
SUMMARY OF QUANTITIES

SCALE: N/A | SHEET 14 OF 15 SHEETS | STA. TO STA.

FAP. RTE.	SECTION	COUNTY	TOTAL SHEETS:	SHEET NO.
693	(129)RS-4	McLEAN	218	11

CONTRACT NO. 70855

ILLINOIS FED. AID PROJECT

REV. 12/12/23 REV. 12/1/23

	CODE NO.	ITEM	UNIT	TOTAL QUANTITY	CONSTRUCTION CODE: FAP 693 (ILL 9 / US 150) URBAN OTHER PRINCIPAL ARTERIAL STA 62+75.64 TO STA 91+41. 70 (MARKET ST) STA 0+00.00 TO STA 3+01. 27 (HINSHAW AVE) MCLEAN COUNTY NHPP 80% FEDERAL / 20% STATE 0005	FAP 693 (MARKET ST) URBAN OTHER PRINCIPAL ARTERIAL MILL AND RESURFACE PARKING LANE MCLEAN COUNTY 50% STATE / 50% CITY 0005	SN 057-0190 URBAN OTHER PRINCIPAL ARTERIAL STA 67+94.50 MCLEAN COUNTY 100% STATE 0047	FAP 693 (MARKET ST & MLK DR) URBAN OTHER PRINCIPAL ARTERIAL STA 64+81. 79 MCLEAN COUNTY NHPP 80% FEDERAL / 10% STATE / 10% CITY 0021	FAP 693 (MARKET ST & CAROLINE ST) URBAN OTHER PRINCIPAL ARTERIAL STA 72+26.03 MCLEAN COUNTY NHPP 80% FEDERAL / 10% STATE / 10% CITY 0021	FAP 693 (MARKET ST & BROWN ST) URBAN OTHER PRINCIPAL ARTERIAL STA 78+29.91 MCLEAN COUNTY NHPP 80% FEDERAL / 13.3% STATE / 6.7% CITY 0021	FAP 693 (MARKET ST & HINSHAW AVE) URBAN OTHER PR INC IPAL ARTERIAL STA 90+76.51 MCLEAN COUNTY NHPP 80% FEDERAL / 10% STATE / 10% CITY 0021	FAP 693 (MARKET ST) URBAN OTHER PRINCIPAL ARTERIAL SIGNAL PRE-EMPT! ON / SIGNAL PAINTING MCLEAN 100% CITY 0021	FAU 6385 (WHITE OAK RD) URBAN MAJOR COLLECTOR STA 200+00.00 TO 205+33.83 MCLEAN COUNTY STP-50-200K COUNTY 80% FEDERAL /20% STATE 0004	FAU 6373 (LOCUST ST) URBAN MINOR ARTERIAL STA 100+00.00 TO 1+00.00 MCLEAN COUNTY STP-50-200K 80% FEDERAL / 20% STATE 0021
	X6060300	CONCRETE MEDIAN, TYPE SB-6.24 (SPECIAL)	SQ FT	900	900										
	X6350206	LINEAR DELINEATOR PANELS, 6 INCH	EACH	1	1										
	X7010216	TRAFFIC CONTROL AND PROTECTION, (SPECIAL)	LSUM	1	0.6	0. 1	0. 1							0.2	
*	X8710103	ETHERNET SWITCH	EACH	4				1	1	1	1				
*	X8760200	ACCESSIBLE PEDESTRIAN SIGNALS	EACH	26				8	6	4	8				
*	X8870300	EMERGENCY VEHICLE PRIORITY SYSTEM	EACH	4								4			
*	XZ193400	SURVEY MARKER, TYPE 2 (SPECIAL)	EACH	8	8										
	Z0012450	CONCRETE STEPS	CU YD	5.9	5.9										
	Z0012455	CONCRETE STEP REMOVAL	EACH	8	8										
	Z0012800	CONCRETE PAVEMENT SCARIFICATION	SQ YD	8908	8908										
	Z0013798	CONSTRUCTION LAYOUT	LSUM	1	0.7	0.1								0.2	
	Z0030850	TEMPORARY INFORMATION SIGNING	SQ FT	189	168									21	
Ø	Z0076600	TRAINEES	HOUR	2,000	2,000										
	Z0048665	RAILROAD PROTECTIVE LIABILITY INSURANCE	LSUM	1	1										
Ø	Z0076604	TRAINEES - TRAINING PROGRAM GRADUATE	HOUR	2,000	2,000										
	Z0075496	CONCRETE RETAINING WALL REMOVAL	FOOT	333	333										

Ø 0042 *= SPECIALTY ITEM

MODEL: Summary Sheet 15
FILE NAME: V:\4216 - IL 9 Bloomington\CADD\CADD Sheets\D270855 sht SOQ.dgn

Hutchison Engineering, Inc.

USER NAME = BDeCraene	DESIGNED -	REVISED -
	DRAWN -	REVISED -
PLOT SCALE = 0.16666633'/in.	CHECKED -	REVISED -
PLOT DATE = 10/27/2023	DATE -	REVISED -

STATE OF ILLINOIS
DEPARTMENT OF TRANSPORTATION

FAP 693 (IL RTE 9)
SUMMARY OF QUANTITIES

SCALE: NIA | SHEET 15 OF 15 SHEETS! STA. TO STA.

FAP. RTE.	SECTION	COUNTY	TOTAL SHEETS:	SHEET NO.
693	(129)RS-4	McLEAN	218	18
		CONTRACT NO. 70855		
	ILLINOIS FED. AID PROJECT			

REV. 12/12/23REV. 12/1/23REV. 11/13/23

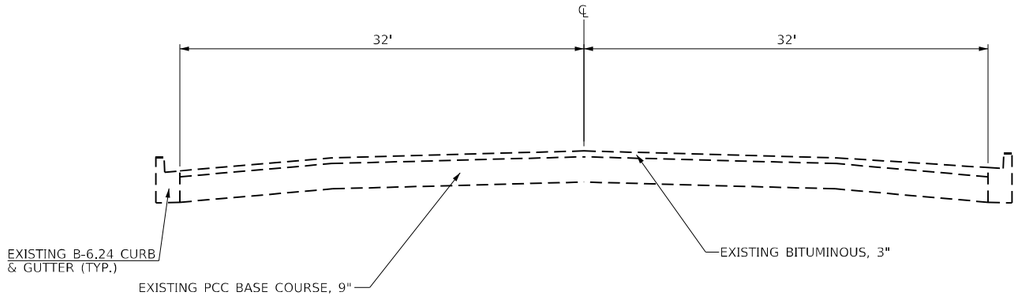

MARKET STREET

BEGINNING OF PROJECT TO CAROLINE ST
STA 62+75.50 TO STA 72+00.00

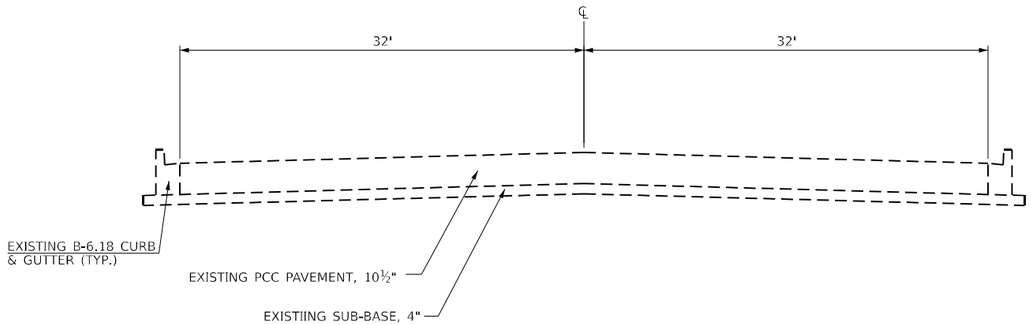

MARKET STREET

CAROLINE ST TO WHITE OAK RD
STA 72+00.00 TO STA 83+75.00

FINAL SURVEY	NOTE BOOK	NO.

BY	DATE
SURVEYED	
PLOTTED	
TEMPLATE	
AREAS	
AREAS CHECKED	

ORIGINAL SURVEY	NOTE BOOK	NO.

BY	DATE
SURVEYED	
PLOTTED	
TEMPLATE	
AREAS	
AREAS CHECKED	

MODEL: Existing Sheet 1
FILE NAME: V:\4216 - IL 9 Bloomington\CADD\CADD Sheets\D570855-sht-typicals.dgn

Hutchison Engineering, Inc.

USER NAME = BDeCraene	DESIGNED -	REVISED -
	DRAWN -	REVISED -
PLOT SCALE = 0.16666633 ' / In.	CHECKED -	REVISED -
PLOT DATE = 10/17/2023	DATE -	REVISED -

STATE OF ILLINOIS
DEPARTMENT OF TRANSPORTATION

FAP 693 (IL RTE 9)
EXISTING TYPICAL SECTIONS

SCALE: N/A | SHEET 1 OF 2 SHEETS | STA. | TO STA.

F.A.P. RTE.	SECTION	COUNTY	TOTAL SHEETS	SHEET NO.
693	(129)RS-4	McLEAN	218	19
		CONTRACT NO. 70855		
	ILLINOIS	FED. AID PROJECT		

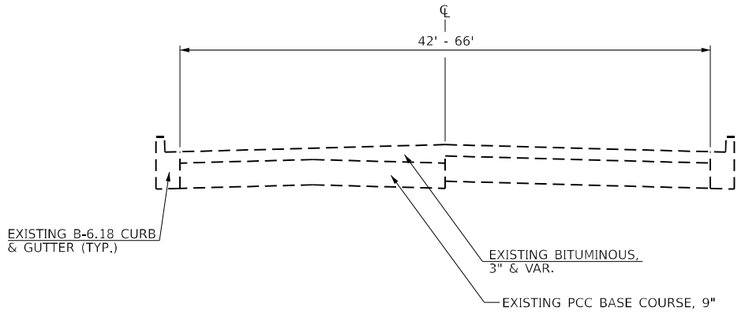

MARKET STREET

WHITE OAK RD TO HINSHAW AVE
STA 83+75.00 TO STA 90+51.09

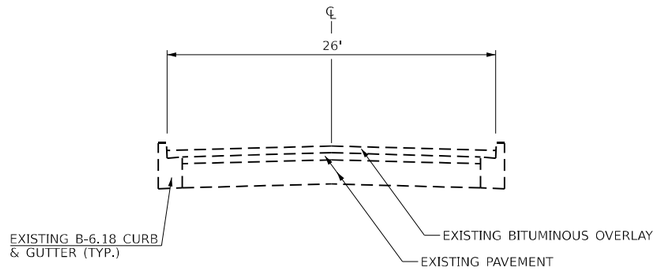

WHITE OAK ROAD

MARKET ST TO LOCUST ST
STA 200+00.00 TO STA 205+33.83

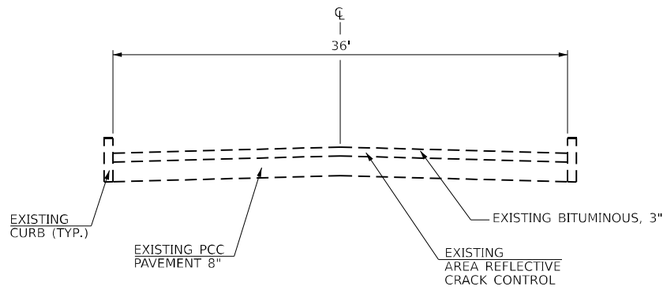

HINSHAW AVENUE

MARKET ST TO LOCUST ST
STA 0+00.00 TO STA 6+19.02

FINAL SURVEY	NOTE BOOK	NO.
SURVEYED		
PLOTTED		
TEMPLATE		
AREAS		
AREAS CHECKED		

BY	DATE

ORIGINAL SURVEY	NOTE BOOK	NO.
SURVEYED		
PLOTTED		
TEMPLATE		
AREAS		
AREAS CHECKED		

BY	DATE

MODEL: Existing Sheet 2
FILE NAME: V:\4216 - IL 9 Bloomington\CADD\CADD Sheets\D570855-sht-typicals.dgn

Hutchison Engineering, Inc.

USER NAME = BDeCraene	DESIGNED -	REVISED -
	DRAWN -	REVISED -
PLOT SCALE = 0.16666633 ' / In.	CHECKED -	REVISED -
PLOT DATE = 10/17/2023	DATE -	REVISED -

STATE OF ILLINOIS
DEPARTMENT OF TRANSPORTATION

FAP 693 (IL RTE 9)
EXISTING TYPICAL SECTIONS

SCALE: N/A | SHEET 2 OF 2 SHEETS | STA. | TO STA.

F.A.P. RTE.	SECTION	COUNTY	TOTAL SHEETS	SHEET NO.
693	(129)RS-4	McLEAN	218	20
		CONTRACT NO. 70855		
	ILLINOIS	FED. AID PROJECT		

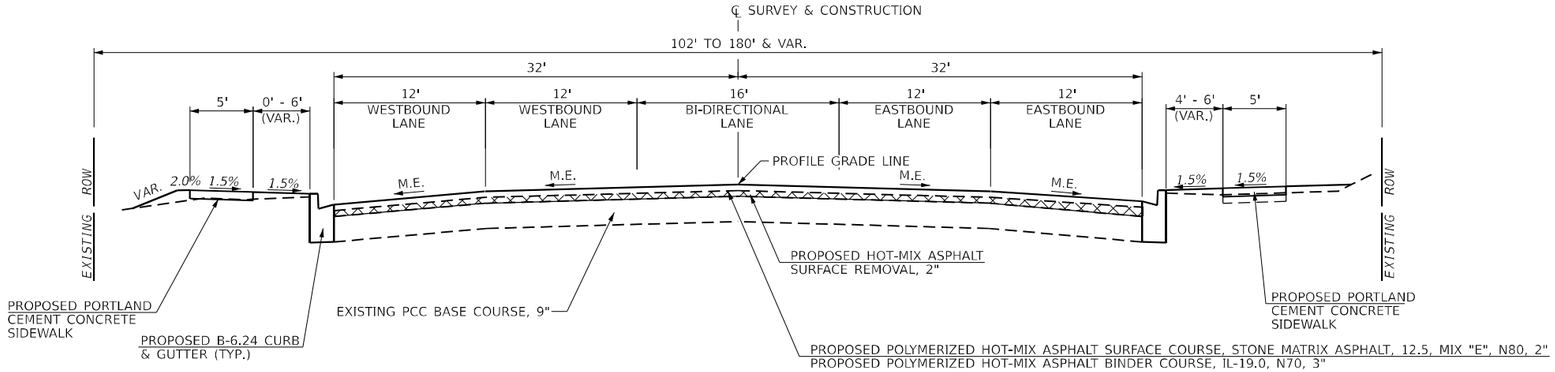

TYPICAL SECTION (CONTRACT 70855)
MARKET STREET

BEGINNING OF PROJECT TO CAROLINE ST
STA 62+75.64 R2 TO STA 67+49.45 R2
STA 67+49.45 R2 TO STA 68+38.83 R2 (BRIDGE OMISSION)
STA 68+38.83 R2 TO STA 68+ 61.44 R2
STA 68+61.44 R2 BK = STA 68+60.72 R3 AH
STA 68+60.72 R3 TO STA 72+00.00 R3

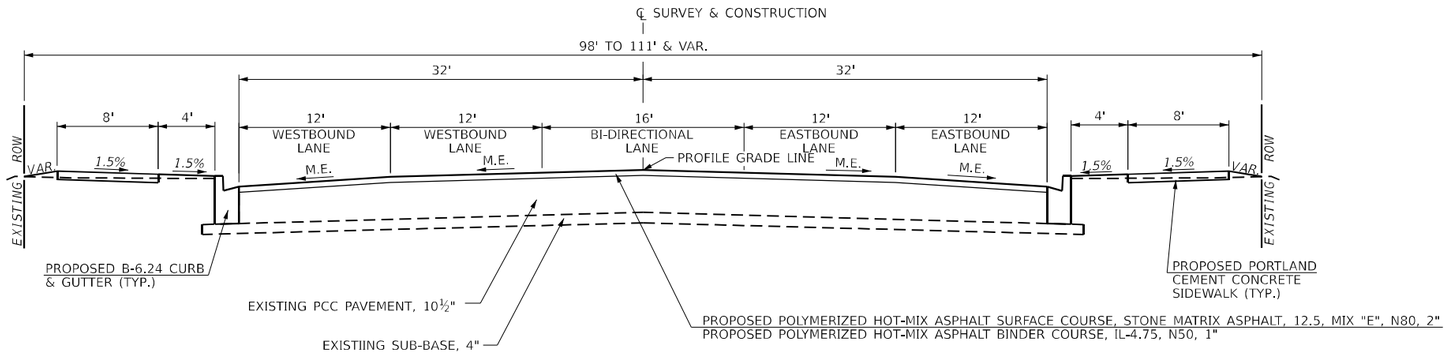

TYPICAL SECTION (CONTRACT 70855)
MARKET STREET

CAROLINE ST TO WHITE OAK RD
STA 72+00.00 R3 TO STA 72+39.77 R3
STA 72+39.77 R3 BK = STA 72+40.13 R4 AH
STA 72+40.13 R4 TO STA 75+27.42 R4
STA 72+27.42 R4 BK = STA 75+27.79 R5 AH
STA 75+27.79 R5 TO STA 83+75.07 R5
STA 82+91.10 R5 TO STA 83+11.27 R5 (RAILROAD OMISSION)

FINAL SURVEY / ORIGINAL SURVEY
NOTE BOOK
NO.
SURVEYED
PLOTTED
TEMPLATE
AREAS
AREAS CHECKED
BY
DATE

MODEL: Proposed Sheet 1
FILE NAME: V:\4216 - IL 9 Bloomington\CADD\CADD Sheets\D570855-sht-typicals.dgn

Hutchison Engineering, Inc.

USER NAME = BDeCraene	DESIGNED -	REVISED -
	DRAWN -	REVISED -
PLOT SCALE = 0.16666633 ' / In.	CHECKED -	REVISED -
PLOT DATE = 10/17/2023	DATE -	REVISED -

STATE OF ILLINOIS
DEPARTMENT OF TRANSPORTATION

FAP 693 (IL RTE 9)
PROPOSED TYPICAL SECTIONS

SCALE: N/A | SHEET 1 OF 3 SHEETS | STA. | TO STA.

F.A.P. RTE.	SECTION	COUNTY	TOTAL SHEETS	SHEET NO.
693	(129)RS-4	McLEAN	218	21
		CONTRACT NO. 70855		
	ILLINOIS	FED. AID PROJECT		

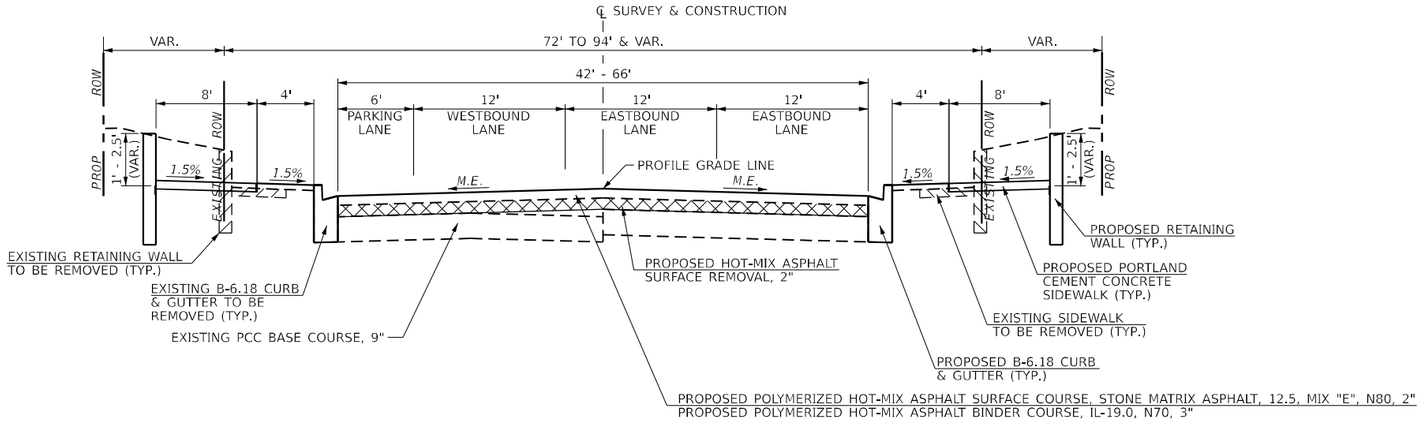

TYPICAL SECTION (CONTRACT 70855)
MARKET STREET

WHITE OAK RD TO HINSHAW AVE
STA 83+75.07 R5 TO STA 90+76.51 R5

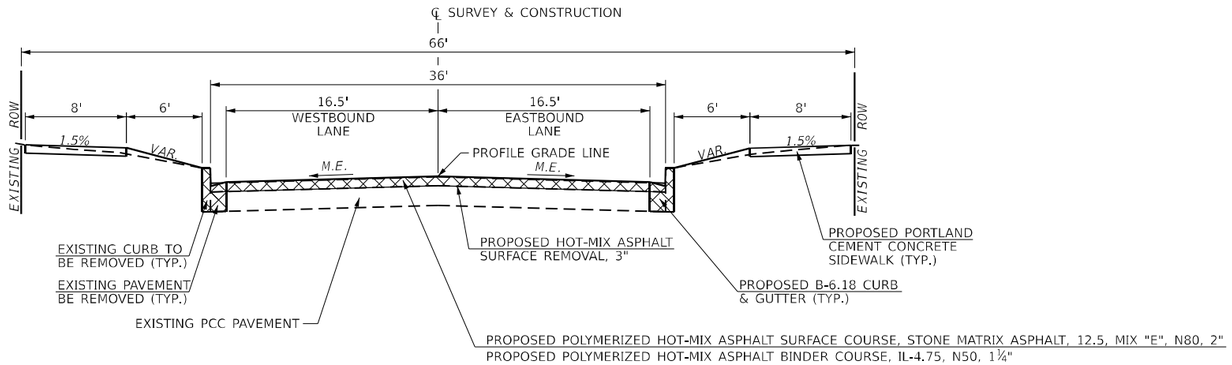

TYPICAL SECTION (CONTRACT 70855)
HINSHAW AVENUE

MARKET ST TO MULBERRY ST
STA 0+00.00 TO STA 3+01.27

Hutchison Engineering, Inc.	USER NAME = BDeCraene	DESIGNED -	REVISED -
		DRAWN -	REVISED -
	PLOT SCALE = 0.16666633 ' / In.	CHECKED -	REVISED -
	PLOT DATE = 10/17/2023	DATE -	REVISED -

STATE OF ILLINOIS
DEPARTMENT OF TRANSPORTATION

FAP 693 (IL RTE 9)
PROPOSED TYPICAL SECTIONS

SCALE: N/A | SHEET 2 OF 3 SHEETS | STA. | TO STA.

F.A.P. RTE.	SECTION	COUNTY	TOTAL SHEETS	SHEET NO.
693	(129)RS-4	McLEAN	218	22
		CONTRACT NO. 70855		
	ILLINOIS	FED. AID PROJECT		

FINAL SURVEY / ORIGINAL SURVEY
NOTE BOOK
NO.
SURVEYED
PLOTTED
TEMPLATE
AREAS
AREAS CHECKED
BY
DATE

MODEL: Proposed Sheet 2
FILE NAME: V:\4216 - IL 9 Bloomington\CADD\CADD Sheets\D570855=sht=typicals.dgn

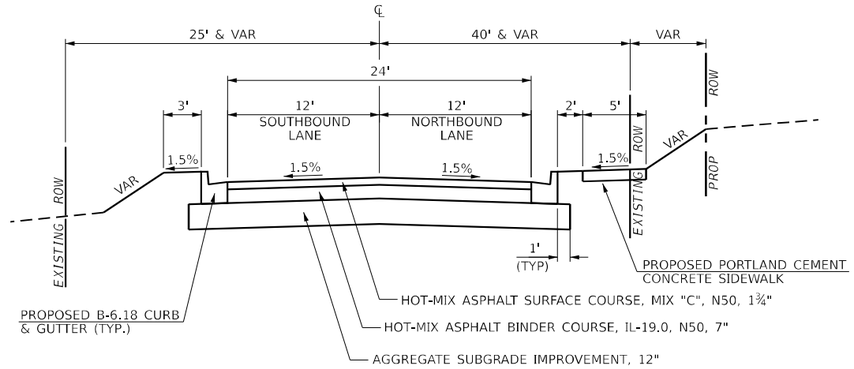

TYPICAL SECTION (CONTRACT 70855)
WHITE OAK ROAD
MARKET ST TO LOCUST ST
STA 200+00.00 TO STA 205+33.83

STRUCTURAL DESIGN TRAFFIC: YEAR 2034

PV = 3,797 SU = 302 MU = 216

ROAD / STREET CLASSIFICATION: CLASS II

PERCENT OF STRUCTURAL DESIGN TRAFFIC IN DESIGN LANE:

P = 88.0% S = 7.0% M = 5.0%

TRAFFIC FACTOR: ACTUAL TF = 1.18 MINIMUM TF = 0.5

PG GRADE: TOP BINDER = PG 64-22 LOWER BINDER = PG 64-22

SURFACE = PG 64-22

SUBGRADE SUPPORT RATING:

SSR = Poor

FINAL SURVEY		BY	DATE
NOTE BOOK	SURVEYED		
NO.	PLOTTED		
	TEMPLATE		
	AREAS		
	AREAS CHECKED		

ORIGINAL SURVEY		BY	DATE
NOTE BOOK	SURVEYED		
NO.	PLOTTED		
	TEMPLATE		
	AREAS		
	AREAS CHECKED		

MODEL: Proposed Sheet 3
FILE NAME: V:\4216 - IL 9 Bloomington\CADD\CADD Sheets\D570855-sht-typicals.dgn

Hutchison Engineering, Inc.

USER NAME = BDeCraene	DESIGNED -	REVISED -	
	DRAWN -	REVISED -	
PLOT SCALE = 0.16666633 ' / in.	CHECKED -	REVISED -	
PLOT DATE = 10/17/2023	DATE -	REVISED -	

STATE OF ILLINOIS
DEPARTMENT OF TRANSPORTATION

FAP 693 (IL RTE 9)
PROPOSED TYPICAL SECTIONS

SCALE: N/A | SHEET 3 OF 3 SHEETS | STA. | TO STA.

F.A.P. RTE.	SECTION	COUNTY	TOTAL SHEETS	SHEET NO.
693	(129)RS-4	McLEAN	218	23
		CONTRACT NO. 70855		
		ILLINOIS	FED. AID PROJECT	

EARTHWORK

1			2	3	4	5
STATION	TO	STATION	EARTH EXCAVATION 20200100	SUITABLE EXCAVATION ADJUSTED FOR SHRINKAGE	EMBANKMENT	FARTHWORK BALANCE WASTE(+) OR SHORTAGE(-)
			CU YD			
W MARKET ST						
62+75.6	TO	67+49.5	51	41	122	-81
68+38.8	TO	72+26.0	9	7	111	-104
72+26.0	TO	78+29.9	31	25	153	-128
78+29.9	TO	82+91.1	87	70	66	4
83+11.3	TO	90+76.5	336	269	108	161
WHITE OAK RD						
200+00.0	TO	205+33.8	1112	890	151	739
N HINSHAW AVE						
0+00.0	TO	3+01.3	100	80	15	65
		TOTAL	1726	1381	726	655

SHRINKAGE FACTOR: 20%
EARTH EXCAVATION:
COLUMN 1, 2, 3, & 4 - LOCATION AND QUANTITIES FROM CROSS SECTIONS
CUT = EARTH EXCAVATION, FILL = EMBANKMENT
COLUMN 3 = COLUMN 2 x (1 - EARTH EXCAVATION SHRINKAGE FACTOR)
COLUMN 5 = COLUMN 3 - COLUMN 4

PAY ITEMS:

COLUMN 2 IS EARTH EXCAVATION (20200100) = 1726 CU YD

TREE REMOVAL

LOCATION		20100110	20100210
STATION	OFFSET	6 TO 15 UNITS DIAMETER	OVER 15 UNITS DIAMETER
W MARKET ST			
87+02	43' RT	15	
87+91	44' LT		18
88+42	38' RT	15	
WHITE OAK RD			
200+60	24' RT	15	
TOTAL		45	18

PAVEMENT

LOCATION			30300112 AGGREGATE SUBGRADE IMPROVEMENT 12"	35600716 HOT-MIX ASPHALT BASE COURSE WIDENING, 10"	35400500 PORTLAND CEMENT CONCRETE BASE COURSE WIDENING, 10"	40600290 BITUMINOUS MATERIALS (TACK COAT)	40603080 HOT-MIX ASPHALT BINDER COURSE, IL-19.0, N50	40604050 HOT-MIX ASPHALT SURFACE COURSE, IL-9.5, MIX "C", N50	40603200 POLYMERIZED HOT-MIX ASPHALT BINDER COURSE, IL-4.75, N50	40603235 POLYMERIZED HOT-MIX ASPHALT BINDER COURSE, IL-19.0, N70	40605034 POLYMERIZED HOT-MIX ASPHALT SURFACE COURSE, STONE MATRIX ASPHALT, 12.5, MIX "E", N80	40600370 LONGITUDINAL JOINT SEALANT	20012800 CONCRETE PAVEMENT SCARIFICATION
STATION	TO	STATION	SQ YD	SQ YD	SQ YD	POUND	TON	TON	TON	TON	TON	FOOT	SQ YD
W MARKET ST													
62+75.64	TO	67+50.98				2282				568	379	2377	
67+50.98	TO	68+37.07											
68+37.07	TO	72+00.00				1736				432	288	1815	
72+00.00	TO	82+91.10				5166			429		857	5456	7651
83+11.22	TO	83+75.01				254			22		43	319	375
83+75.01	TO	89+05.00				2378			44	471	340	2650	
89+05.00	TO	91+41.70				437			126		128	1184	
MARTIN LUTHER KING JR. DR													
0+32.20	TO	0+88.84	3	3		404				101	128		
PEGGY LN													
300+44.28	TO	301+67.64	388			960	152	38					
N CAROLINE ST													
0+32.96	TO	0+59.13	3	3		53				13	9		
S CAROLINE ST													
401+21.06	TO	402+68.18	41	41		705				176	117		
BROWN ST													
500+05.35	TO	501+67.68	34		34	596			50		99		882
WHITE OAK RD													
200+33.32	TO	205+33.83	1837			4547	720	180					
STILLWELL ST													
0+89.66	TO	1+70.09	2	2		179				45	30		
HOLTON DR													
0+22.19	TO	0+54.01	1	1		53				13	9		
N HINSHAW AVE													
0+19.91	TO	3+01.27				905			75		150	281	
		TOTAL	2309	50	34	20655	872	218	746	1819	2577	14081	8908

INLET FILTERS

STATION	OFFSET	28000510 EACH
W MARKET ST		
63+15	34' LT	1
63+21	34' RT	1
63+96	34' RT	1
65+89	34' RT	1
66+06	34' LT	1
69+51	34' RT	1
69+64	34' LT	1
70+93	34' LT	1
72+22	34' LT	1
73+00	34' LT	1
73+09	34' LT	1
73+22	39' RT	1
74+14	33' LT	1
74+43	34' RT	1
75+18	34' RT	1
75+41	33' LT	1
76+30	33' LT	1
77+78	33' LT	1
78+70	33' LT	1
78+71	39' LT	1
80+42	33' RT	1
80+44	33' LT	1
80+55	38' LT	1
83+44	35' RT	1
83+56	35' RT	1
83+57	49' LT	1
84+90	43' RT	1
84+95	31' LT	1
84+95	33' RT	1
85+13	47' RT	1
85+49	47' RT	1
85+52	43' RT	1
87+00	26' RT	1
87+10	27' LT	1
88+30	25' LT	1
88+89	25' RT	1
90+33	48' LT	1
90+53	39' LT	1
90+89	35' LT	1
CAROLINE ST		
401+96	30' RT	1
401+97	19' LT	1
BROWN ST		
500+95	23' LT	1
501+01	18' RT	1
501+05	25' LT	1
501+12	20' RT	1
WHITE OAK RD		
201+90	25' RT	1
201+92	31' RT	1
202+27	33' RT	1
203+57	14' RT	1
203+67	14' RT	1
203+67	14' LT	1
204+79	21' LT	1
N HINSHAW AVE		
2+55	35' RT	1
2+61	34' LT	1
2+81	34' RT	1
2+86	36' LT	1
TOTAL		56

TEMPORARY EROSION CONTROL SEEDING

STATION +/-	TO	STATION +/-	SIDE	TEMP SEED (ACRES)	POUNDS PER APPLICATION PER ACRE	NUMBER OF APPLICATIONS	28000250 TOTAL (POUND)
W MARKET ST							
63+03	TO	63+73	LT	0.01	100	9	10
63+11	TO	64+63	RT	0.02	100	9	15
65+12	TO	67+44	RT	0.01	100	9	14
65+41	TO	67+56	LT	0.03	100	9	24
68+33	TO	71+91	RT	0.04	100	9	36
68+42	TO	82+78	LT	0.23	100	9	206
73+00	TO	77+83	RT	0.07	100	9	64
78+96	TO	83+11	RT	0.06	100	9	52
83+25	TO	85+02	RT	0.02	100	9	17
83+69	TO	90+03	LT	0.08	100	9	75
85+60	TO	88+50	RT	0.04	100	9	35
88+87	TO	90+69	RT	0.02	100	9	22
91+05	TO	91+42	LT	0.00	100	9	4
91+19	TO	91+51	RT	0.00	100	9	4
MARTIN LUTHER KING JR DR							
NW QUADRANT			LT	0.02	100	9	14
NE QUADRANT			RT	0.01	100	9	7
PEGGY LN							
300+44	TO	301+52	LT	0.01	100	9	14
300+44	TO	301+56	RT	0.01	100	9	9
CAROLINE ST							
401+21	TO	402+37	LT	0.01	100	9	10
401+43	TO	402+39	RT	0.02	100	9	15
BROWN ST							
500+05	TO	501+59	LT	0.01	100	9	13
500+74	TO	501+45	RT	0.01	100	9	7
WHITE OAK RD							
200+41	TO	201+91	RT	0.02	100	9	17
200+47	TO	202+36	LT	0.08	100	9	71
202+02	TO	205+34	RT	0.01	100	9	13
202+52	TO	204+38	LT	0.02	100	9	18
204+75	TO	205+34	LT	0.01	100	9	6
STILLWELL ST							
SW QUADRANT			RT	0.02	100	9	14
SE QUADRANT			LT	0.01	100	9	6
HOLTON DR							
SE QUADRANT			LT	0.00	100	9	2
SW QUADRANT			RT	0.00	100	9	2
N HINSHAW AVE							
0+24	TO	2+54	RT	0.03	100	9	24
0+39	TO	2+62	LT	0.03	100	9	25
2+79	TO	3+14	RT	0.01	100	9	7
2+86	TO	3+18	LT	0.00	100	9	4
						TOTAL	876
						USE	900

SODDING & NUTRIENTS

STATION +/-	TO	STATION +/-	SIDE	25200110 SODDING, SALT TOLERANT (SQ YD)	25200200 SUPPLEMENTAL WATERING (UNIT)	25000400 NITROGEN FERTILIZER NUTRIENT (POUND)	25000500 PHOSPHORUS FERTILIZER NUTRIENT (POUND)	25000600 POTASSIUM FERTILIZER NUTRIENT (POUND)
W MARKET ST								
63+03	TO	63+73	LT	51	0.4	1	1	1
63+11	TO	64+63	RT	80	0.6	1	1	1
65+12	TO	67+44	RT	71	0.5	1	1	1
65+41	TO	67+56	LT	127	0.9	2	2	2
68+33	TO	71+91	RT	193	1.3	3	3	3
68+42	TO	82+78	LT	1105	7.4	14	14	14
73+00	TO	77+83	RT	339	2.3	5	5	5
78+96	TO	83+11	RT	279	1.9	4	4	4
83+25	TO	85+02	RT	89	0.6	2	2	2
83+69	TO	90+03	LT	402	2.7	5	5	5
85+60	TO	88+50	RT	187	1.3	3	3	3
88+87	TO	90+69	RT	118	0.8	2	2	2
91+05	TO	91+42	LT	21	0.2	1	1	1
91+19	TO	91+51	RT	17	0.2	1	1	1
MARTIN LUTHER KING JR DR								
NW QUADRANT			LT	75	0.5	1	1	1
NE QUADRANT			RT	33	0.3	1	1	1
PEGGY LN								
300+44	TO	301+52	LT	72	0.5	1	1	1
300+44	TO	301+56	RT	46	0.4	1	1	1
CAROLINE ST								
401+21	TO	402+37	LT	51	0.4	1	1	1
401+43	TO	402+39	RT	79	0.6	1	1	1
BROWN ST								
500+05	TO	501+59	LT	68	0.5	1	1	1
500+74	TO	501+45	RT	33	0.3	1	1	1
WHITE OAK RD								
200+41	TO	201+91	RT	87	0.6	2	2	2
200+47	TO	202+36	LT	377	2.6	5	5	5
202+02	TO	205+34	RT	65	0.5	1	1	1
202+52	TO	204+38	LT	94	0.7	2	2	2
204+75	TO	205+34	LT	31	0.3	1	1	1
STILLWELL ST								
SW QUADRANT			RT	75	0.5	1	1	1
SE QUADRANT			LT	28	0.2	1	1	1
HOLTON DR								
SE QUADRANT			LT	10	0.1	1	1	1
SW QUADRANT			RT	7	0.1	1	1	1
N HINSHAW AVE								
0+24	TO	2+54	RT	124	0.9	2	2	2
0+39	TO	2+62	LT	132	0.9	2	2	2
2+79	TO	3+14	RT	35	0.3	1	1	1
2+86	TO	3+18	LT	21	0.2	1	1	1
			TOTAL	4622	32.5	74	74	74

MODEL: Schedule Sheet 2
FILE NAME: V:\4216-IL 9 Bloomington\CADD\CADD Sheets\D570855-sht-schdule.dgn

Hutchison Engineering, Inc.

USER NAME = BDeCraene	DESIGNED -	REVISED -
	DRAWN -	REVISED -
PLOT SCALE = 0.16666633 ' / in.	CHECKED -	REVISED -
PLOT DATE = 10/17/2023	DATE -	REVISED -

STATE OF ILLINOIS
DEPARTMENT OF TRANSPORTATION

FAP 693 (IL RTE 9)
SCHEDULE OF QUANTITIES

SCALE: N/A | SHEET 2 OF 13 SHEETS | STA. | TO STA.

F.A.P. RTE.	SECTION	COUNTY	TOTAL SHEETS	SHEET NO.
693	(129)RS-4	McLEAN	218	25
		CONTRACT NO. 70855		
	ILLINOIS	FED. AID PROJECT		

ENTRANCES

LOCATION			42300200 PCC DRIVEWAY PAVEMENT, 6 INCH	42300400 PCC DRIVEWAY PAVEMENT, 8 INCH
STATION	SIDE	TYPE	SQ YD	SQ YD
W MARKET ST				
63+70.0	RT	CE		50
65+54.6	RT	CE		45
66+43.3	RT	CE		45
66+85.8	LT	CE		135
69+83.5	RT	CE		49
70+44.4	RT	CE		42
70+57.9	LT	CE		58
71+35.7	LT	CE		42
74+11.8	RT	CE		47
74+41.2	LT	CE		48
75+15.4	LT	CE		39
75+49.4	RT	CE		36
75+82.1	LT	CE		33
76+67.2	LT	CE		41
78+37.2	LT	PE	15	
78+88.3	LT	PE	19	
79+43.9	LT	PE	21	
80+00.4	LT	PE	17	
80+63.3	RT	CE		82
80+88.3				
80+86.7	LT	PE	24	
81+36.3	LT	PE	18	
81+80.3	LT	PE	19	
82+16.5	RT	CE		31
84+04.9	RT	CE		38
85+28.9	LT	PE	38	
85+94.7	LT	PE	28	
86+05.4	LT	PE	60	
87+86.8	LT	PE	32	
88+86.7	LT	PE	29	
89+53.6	LT	CE		46
PEGGY LN				
300+85.1	RT	CE		48
BROWN ST				
500+39.9	LT	CE		72
WHITE OAK RD				
201+00.0	RT	PE	45	
203+92.9	RT	ALLEY	35	
STILLWELL ST				
1+22.0	LT	PE		70
N HINSHAW AVE				
+77.4	LT	CE		18
+80.7	RT	CE		36
1+43.2	LT	PE	25	
1+49.7	RT	CE		34
1+98.8	LT	PE	13	
TOTAL			446	1185

SIDEWALK

LOCATION			SIDE	42400200 PCC SIDEWALK 5 INCH	42400800 DETECTABLE WARNINGS	20200100 EARTH EXCAVATION	40600290 BITUMINOUS MATERIALS (TACK COAT)	40604050 HOT-MIX ASPHALT SURFACE COURSE, IL-9.5, MIX "C", N50
STATION	TO	STATION		SQ FT	SQ FT	CU YD	POUND	TON
W MARKET ST								
63+13.2	TO	63+28.2	LT	101		0.4		
63+39.0	TO	64+70.0	RT	708	25	2.4		
64+10.4	TO	64+29.6	LT	152	10	0.6		
Island Median (MLK Jr. Dr)			LT	156	31			
65+09.0	TO	67+44.7	RT	1140	10	1.9		
65+20.8	TO	67+55.8	LT	1288	10	15.4		
68+33.1	TO	72+19.5	RT	2347	14	8.2		
68+41.8	TO	72+33.9	LT	2010	10	24.4		
72+60.7	TO	82+61.8	LT	8279	44	63.1		
72+96.0	TO	78+35.6	RT	4695	31	50.8		
78+62.8	TO	82+97.8	RT	3652	38	37.2		
82+61.8	TO	82+81.4	LT				38	5
82+88.7	TO	83+01.5	LT				23	3
82+97.8	TO	83+14.2	RT				28	4
83+21.9	TO	83+86.6	RT				30	4
83+01.5	TO	83+14.9	LT	102	33	0.1		
83+38.2	TO	85+09.9	RT	1347	45	9.2		
83+86.6	TO	90+05.8	LT	4967		34.5		
85+53.4	TO	88+52.5	RT	2563	44	21.9		
88+76.3	TO	90+64.2	RT	1714	50	14.3		
91+22.6	TO	91+49.9	RT	298	26	1.2		
WHITE OAK RD								
200+26.5	TO	201+89.9	RT	1177	35	11.6		
202+21.0	TO	203+75.6	RT	902	12	4.2		
N HINSHAW AVE								
0+14.9	TO	2+54.1	RT	2271	67	8.5		
0+43.2	TO	2+59.4	LT	1984	51	10.3		
2+81.6	TO	3+12.2	RT	421	36	1.3		
2+86.5	TO	3+16.7	LT	299	32	1.0		
			TOTAL	42573	654	323	119	16

PAVEMENT REMOVAL

LOCATION			44000100 AREA
STATION +/-	TO	STATION +/-	SQ YD
W MARKET ST			
62+75.64	TO	67+50.98	66
67+50.98	TO	68+37.07	
68+37.07	TO	72+00.00	39
72+00.00	TO	82+91.10	100
83+11.22	TO	83+75.01	89
83+75.01	TO	90+00.00	118
90+00.00	TO	90+76.51	
MARTIN LUTHER KING JR. DR			
0+32.20	TO	0+88.84	55
PEGGY LN			
300+44.28	TO	301+67.64	394
N CAROLINE ST			
0+32.96	TO	0+59.13	
S CAROLINE ST			
401+21.06	TO	402+68.18	
BROWN ST			
500+05.35	TO	501+67.68	
WHITE OAK RD			
200+33.32	TO	205+33.83	1852
STILLWELL ST			
0+89.66	TO	1+70.09	19
HOLTON DR			
0+22.19	TO	0+54.01	19
N HINSHAW AVE			
0+19.91	TO	3+01.27	96
		TOTAL	2847

TEMPORARY RAMP

LOCATION	40600990 AREA
STATION	SQ YD
W MARKET ST	
62+76	48
67+51	49
68+37	53
72+00	48
82+91	47
83+11	43
91+42	28
MARTIN LUTHER KING JR RD	
64+78 LT	54
N CAROLINE ST	
72+47 LT	29
72+48 LT	17
S CAROLINE ST	
401+21	29
402+68	99
BROWN ST	
500+05	21
500+85	25
WHITE OAK RD	
200+33	58
STILLWELL ST	
85+35 RT	20
HOLTON DR	
88+64 RT	15
HINSHAW AVE	
90+86 RT	83
3+01	27
MULBERRY ST	
2+68 RT	20
2+74 LT	20
TOTAL	833

COMBINATION CURB AND GUTTER REMOVAL

LOCATION			44000500	
STATION +/-	TO	STATION +/-	SIDE	FOOT
W MARKET ST				
62+76	TO	64+82	LT	193
62+76	TO	64+96	RT	336
64+82	TO	67+54	LT	379
64+96	TO	67+45	RT	394
68+33	TO	72+48	RT	595
68+44	TO	72+43	LT	527
72+43	TO	82+78	LT	1045
72+48	TO	78+57	RT	816
78+57	TO	83+05	RT	539
83+25	TO	85+35	RT	259
83+75	TO	89+97	LT	623
85+35	TO	88+62	RT	396
88+62	TO	90+65	RT	246
91+15	TO	91+42	LT	28
91+19	TO	91+42	RT	31
WHITE OAK RD				
200+25	TO	202+26	RT	280
200+55	TO	204+57	LT	470
202+26	TO	205+34	RT	340
			TOTAL	7497

CURB REMOVAL

LOCATION			44000300	
STATION +/-	TO	STATION +/-	SIDE	FOOT
N HINSHAW AVE				
0+12	TO	2+68	RT	247
0+37	TO	2+74	LT	285
2+68	TO	3+01	RT	33
2+74	TO	3+01	LT	44
			TOTAL	609

HMA SURFACE REMOVAL

LOCATION			2" 44000157 AREA	3" 44000161 AREA
STATION +/-	TO	STATION +/-	SQ YD	SQ YD
W MARKET ST				
62+75.64	TO	67+50.98	3379	
67+50.98	TO	68+37.07		
68+37.07	TO	72+00.00	2571	
72+00.00	TO	82+91.10		
83+11.22	TO	83+75.01		
83+75.01	TO	89+05.00	3516	
89+05.00	TO	90+76.51		1113
MARTIN LUTHER KING JR. DR				
0+32.20	TO	0+88.84	588	
PEGGY LN				
300+44.28	TO	301+67.64		
N CAROLINE ST				
0+32.96	TO	0+59.13	75	
S CAROLINE ST				
401+21.06	TO	402+68.18	1003	
BROWN ST				
500+05.35	TO	501+67.68		
WHITE OAK RD				
200+33.32	TO	205+33.83		
STILLWELL ST				
0+89.66	TO	1+70.09	262	
HOLTON DR				
0+22.19	TO	0+54.01	77	
N HINSHAW AVE				
0+19.91	TO	3+01.27		1338
		TOTAL	11471	2451

DRIVEWAY PAVEMENT REMOVAL

LOCATION		TYPE	44000200 AREA
STATION	SIDE		SQ YD
W MARKET ST			
63+70.2	RT	CE	50
65+54.3	RT	CE	61
66+43.1	RT	CE	44
66+85.1	LT	CE	161
69+82.7	RT	CE	58
70+44.9	RT	CE	56
70+58.9	LT	CE	73
71+35.0	LT	CE	51
74+10.6	RT	CE	62
74+40.6	LT	CE	62
75+14.9	LT	CE	51
75+49.5	RT	CE	52
75+78.8	LT	CE	52
76+66.5	LT	CE	65
77+59.4	LT	CE	16
78+37.3	LT	PE	21
78+89.0	LT	PE	19
79+43.9	LT	PE	26
80+00.1	LT	PE	20
80+83.3	RT	CE	104
80+87.1	LT	PE	27
81+36.2	LT	PE	24
81+80.7	LT	FE	18
82+23.0	RT	CE	46
84+05.1	RT	CE	51
85+19.6	LT	PE	38
85+40.9	LT	FE	12
85+88.8	LT	PE	30
86+84.1	LT	PE	62
87+78.9	LT	PE	35
88+82.3	LT	PE	26
89+31.4	LT	CE	14
89+53.6	LT	CE	25
89+81.6	LT	CE	33
BROWN ST			
500+41.1	LT	CE	63
STILLWELL ST			
1+27.7	LT	CE	77
WHITE OAK RD			
200+98.5	RT	PE	47
203+84.9	RT	ALLEY	33
N HINSHAW AVE			
+77.8	LT	CE	25
+78.3	RT	CE	30
1+30.6	RT	CE	64
1+44.3	LT	CE	20
1+98.7	LT	PE	11
		SUB-TOTAL	1915
		TOTAL	1915

SIDEWALK REMOVAL

LOCATION			SIDE	44000600 SQ FT
STATION	TO	STATION		
MARKET ST				
63+13	TO	63+28	LT	73
63+39	TO	64+78	RT	613
MARTIN LUTHER KING DR INTERSECTION			NW CRN	148
			NE CRN	71
65+10	TO	67+45	RT	853
68+33	TO	71+47	RT	1017
CAROLINE ST INTERSECTION			SW CRN	477
			NE CRN	239
			SE CRN	158
73+09	TO	82+81	LT	4009
73+24	TO	77+52	RT	1723
BROWN ST INTERSECTION			SW CRN	790
			SE CRN	373
79+12	TO	83+14	RT	1701
WHITE OAK RD INTERSECTION			NE CRN	274
83+87	TO	90+00	LT	2674
83+21	TO	85+07	RT	722
STILLWELL ST INTERSECTION			SE CRN	131
85+76	TO	88+44	RT	1013
HOLTON DR INTERSECTION			SW CRN	79
			SE CRN	208
89+07	TO	90+27	RT	538
N HINSHAW AVE INTERSECTION			SW CRN	268
			SE CRN	216
			NE CRN	259
			NW CRN	314
N HINSHAW AVE				
0+43	TO	2+32	RT	933
0+92	TO	2+40	LT	724
W MULBERRY ST INTERSECTION			SW CRN	182
			SE CRN	320
			NE CRN	318
			NW CRN	203
WHITE OAK RD				
200+70	TO	201+74	RT	405
W MULBERRY ST INTERSECTION			SE CRN	467
			NE CRN	355
202+64	TO	203.75.65	RT	406
			TOTAL	23254

PERIMETER EROSION BARRIER

STATION	TO	STATION	SIDE	28000400 LENGTH FOOT
MARKET ST				
63+38	TO	63+57	RT	23
63+83	TO	64+12	RT	45
64+23	TO	64+65	RT	42
65+17	TO	65+38	RT	22
65+28	TO	66+72	LT	168
65+71	TO	66+27	RT	57
67+00	TO	67+55	LT	67
68+33	TO	69+68	RT	141
68+43	TO	70+45	LT	209
69+98	TO	70+29	RT	32
70+58	TO	71+60	RT	101
70+74	TO	71+22	LT	53
71+51	TO	72+36	LT	90
73+05	TO	73+99	RT	97
74+27	TO	75+34	RT	110
75+65	TO	77+72	RT	208
78+67	TO	80+63	RT	218
80+93	TO	81+30	LT	42
81+05	TO	82+09	RT	110
81+43	TO	81+74	LT	32
81+86	TO	82+77	LT	93
82+37	TO	83+11	RT	75
83+25	TO	83+88	RT	65
WHITE OAK RD				
200+59	TO	202+35	LT	178
202+56	TO	204+38	LT	203
204+75	TO	205+34	LT	74
			TOTAL	2555

PERIMETER EROSION BARRIER IS SILT FENCE.

CLASS B PATCHES

STATION +/-	SIDE	44200996 TYPE I 10 INCH SQ YD	44200970 TYPE II 10 INCH SQ YD	44200974 TYPE III 10 INCH SQ YD	44200976 TYPE IV 10 INCH SQ YD	44201297 DOWEL BARS 1" EACH	44213202 TIE BARS 1" EACH	44213200 SAW CUTS FOOT	44200050 WELDED WIRE REINFORCEMENT SQ YD
W MARKET ST									
PCC PAVEMENT AREA		84	84	84	84	20	14	167	167
63+58.10	30.0' RT			19		20	27	84	
74+29.40	30.0' RT		8			20	11	36	
75+30.70	30.0' RT		7			20	10	34	
83+46.10	20.8' RT			15		20		52	15
83+52.60	22.2' LT			18		20		64	18
86+99.10	14.0' LT				34	20		64	34
88+67.70	20.5' RT			19		20		67	19
BROWN ST									
500+99.20	7.8' LT		13			20		35	
500+99.20	9.5' RT		11			20		34	
HINSHAW AVE									
2+57.30	27.7' RT		7			20		25	
2+61.30	21.7' LT		12			20		41	
2+70.10	27.4' RT		13			20		44	
2+73.90	22.4' LT			18		20		62	18
	TOTAL	84	155	173	118	280	62	809	271

MODEL: Schedule Sheet 4
FILE NAME: V:\4216 - IL 9 Bloomington\CADD\CADD Sheets\D570855-sht-schedule.dgn

Hutchison Engineering, Inc.	USER NAME = BDeCraene	DESIGNED -	REVISED -	
		DRAWN -	REVISED -	
	PLOT SCALE = 0.16666633 ' / in.	CHECKED -	REVISED -	
	PLOT DATE = 10/17/2023	DATE -	REVISED -	

STATE OF ILLINOIS
DEPARTMENT OF TRANSPORTATION

FAP 693 (IL RTE 9)
SCHEDULE OF QUANTITIES

SCALE: N/A | SHEET 4 OF 13 SHEETS | STA. | TO STA.

F.A.P. RTE.	SECTION	COUNTY	TOTAL SHEETS	SHEET NO.
693	(129)RS-4	McLEAN	218	27
		CONTRACT NO. 70855		
	ILLINOIS	FED. AID PROJECT		

STORM SEWER

STATION	OFFSET	TYPE	550A0050 STORM SEWER CL A TY 1 12" FOOT	550A0070 STORM SEWER CL A TY 1 15" FOOT	550A0340 STORM SEWER CL A TY 2 12" FOOT	54213657 PRC FLARED END SECTION 12" EACH	60218400 MANHOLES TY A 4' DIA., TY 1 FRAME, CL LID EACH	60218500 MANHOLES TY A 4' DIA., TY 3 F&G EACH	60235700 INLETS TY A TY 3 F&G EACH	60240220 INLETS TY B TY 3 F&G EACH	20800150 TRENCH BACKFILL CU YD
W MARKET ST											
63+15.70	59.6' LT	END SECTION				1					
		SS	24								3
63+15.40	34.0' LT	INLET							1		
63+20.60	34.0' RT	INLET							1		
		SS	72								8
63+95.60	34.0' RT	INLET								1	
		SS	26								2
		SS			24						7
74+42.50	33.5' RT	INLET							1		
75+18.00	33.5' RT	INLET							1		
		SS			22						5
83+56.80	49.4' LT	INLET							1		
		SS			84						12
85+51.70	43.0' RT	INLET							1		
		SS	4								1
87+09.60	27.1' LT	INLET							1		
		SS	34								
88+88.50	24.8' RT	INLET							1		
		SS	34								
88+74.50	36.4' RT	INLET									
CAROLINE ST											
401+96.60	19.3' LT	INLET							1		
		SS		48							
BROWN ST											
		SS		38							
500+95.10	22.8' LT	INLET								1	
		SS		8							
501+05.10	24.7' LT	INLET								1	

STORM SEWER

STATION	OFFSET	TYPE	550A0050 STORM SEWER CL A TY 1 12" FOOT	550A0070 STORM SEWER CL A TY 1 15" FOOT	550A0340 STORM SEWER CL A TY 2 12" FOOT	54213657 PRC FLARED END SECTION 12" EACH	60218400 MANHOLES TY A 4' DIA., TY 1 FRAME, CL LID EACH	60218500 MANHOLES TY A 4' DIA., TY 3 F&G EACH	60235700 INLETS TY A TY 3 F&G EACH	60240220 INLETS TY B TY 3 F&G EACH	20800150 TRENCH BACKFILL CU YD
WHITE OAK RD											
201+91.80	31.2' RT	INLET							1		
		SS	4								1
201+90.00	25.4' RT	INLET								1	
		SS	36								5
202+27.00	32.9' RT	INLET								1	
		SS	44								7
203+67.20	13.5' LT	INLET							1		
		SS	8								2
203+57.20	13.5' LT	MH						1			
		SS	6								1
203+57.20	21.6' LT	MH					1				
		SS			24						7
203+57.20	13.5' RT	INLET								1	
		SS			8						2
203+67.20	13.5' RT	INLET							1		
HINSHAW AVE											
2+55.10	34.8' RT	INLET							1		
		SS			14						3
		SS			24						5
2+80.60	34.1' RT	INLET							1		
2+60.50	34.3' LT	INLET							1		
		SS			24						5
		SS			34						7
2+85.70	35.7' LT	INLET							1		
TOTAL			292	94	258	1	1	1	16	6	83

PCC SURFACE REMOVAL

LOCATION			BUTT JOINT 40600085 SQ YD
STATION +/-	TO	STATION +/-	
W MARKET ST			
82+11	TO	82+91	571
83+11	TO	83+91	466
BROWN ST			
500+05	TO	500+85	279
		TOTAL	1316

CLASS D PATCHES

STATION +/-	OFFSET	44201761 TYPE I 10 INCH SQ YD	44201765 TYPE II 10 INCH SQ YD	44201769 TYPE III 10 INCH SQ YD	44201771 TYPE IV 10 INCH SQ YD
W MARKET ST @ MLK JR. DR INTERSECTION					
64+36.5	39.8' LT		8		
CAROLINE ST					
401+96.2	6.6' LT		8		
401+96.2	15.1' RT			17	
W MARKET ST					
HMA PAVEMENT		102	102	102	102
TOTAL		102	118	119	102

STORM SEWER REMOVAL

STATION +/-		TO	STATION +/-		SIDE	55100500 12" FOOT	55100700 15" FOOT	20800150 TRENCH BACKFILL CU YD
W MARKET ST								
63+03.48	34.3' RT	TO	64+00.32	63.5' RT	RT	30		3
74+15.55	34.1' RT	TO	74+34.36	33.7' RT	RT	19		10
75+25.53	33.7' RT	TO	75+42.22	33.4' RT	RT	16		8
85+48.86	47.1' RT	TO	85+53.91	40.5' RT	RT	8		4
88+60.86	4.5' RT	TO	88+86.98	27.1' RT	RT	35		10
CAROLINE ST								
401+97.00	14.5' LT	TO	401+95.77	31.3' RT	X-RD		46	13
BROWN ST								
500+97.78	18.6' LT	TO	501+00.39	18.6' RT	X-RD		37	9
500+97.78	18.6' LT	TO	501+09.70	20.9' LT	LT		12	4
500+97.78	18.6' LT	TO	501+65.92	75.9' LT	LT		89	4
WHITE OAK RD								
202+07.03	1.5' RT	TO	202+22.21	12.7' LT	X-RD	21		9
202+68.42	5.2' RT	TO	202+64.59	6.3' LT	X-RD	12		5
					TOTAL	141	184	79

NOTE: END SECTION REMOVAL WILL BE INCLUDED IN THE COST OF STORM SEWER REMOVAL.

MODEL: Schedule Sheet 5
FILE NAME: V:\4216 - IL 9 Bloomington\CADD\C\ADD Sheets\D570855-sthschedule.dgn

Hutchison Engineering, Inc.

USER NAME = BDeCraene	DESIGNED -	REVISED -	
	DRAWN -	REVISED -	
PLOT SCALE = 0.16666633 ' / In.	CHECKED -	REVISED -	
PLOT DATE = 10/17/2023	DATE -	REVISED -	

STATE OF ILLINOIS
DEPARTMENT OF TRANSPORTATION

FAP 693 (IL RTE 9)
SCHEDULE OF QUANTITIES

SCALE: N/A | SHEET 5 OF 13 SHEETS | STA. | TO STA.

F.A.P. RTE.	SECTION	COUNTY	TOTAL SHEETS	SHEET NO.
693	(129)RS-4	McLEAN	218	28
		CONTRACT NO. 70855		
	ILLINOIS FED. AID PROJECT			

ADJUSTMENT SCHEDULE

STATION +/-	OFFSET	56109210 WATER VALVES TO BE ADJUSTED	60255700 MANHOLES TO BE ADJUSTED WITH NEW TYPE 1 FRAME, OPEN LID	60255800 MANHOLES TO BE ADJUSTED WITH NEW TYPE 1 FRAME, CLOSED LID	60260300 INLETS TO BE ADJUSTED WITH NEW TYPE 1 FRAME, OPEN LID	60260500 INLETS TO BE ADJUSTED WITH NEW TYPE 3 FRAME AND GRATE	X6024503 INLETS TO BE ADJUSTED WITH NEW FRAME AND GRATE (SPECIAL)	X6025800 MANHOLES TO BE ADJUSTED WITH NEW TYPE 1 FRAME, CLOSED LID (SPECIAL)	60500060 REMOVING INLETS
		EACH	EACH	EACH	EACH	EACH	EACH	EACH	EACH
W MARKET ST									
63+93.48	34' RT								1
64+55.13	37' RT			1					
65+88.85	34' RT					1			
66+06.16	35' LT					1			
69+51.09	34' RT					1			
69+63.92	35' LT					1			
70+09.95	40' RT			1					
70+92.77	35' LT					1			
71+90.63	28' RT			1					
72+16.10	50' RT	1							
72+21.82	35' LT						1		
72+26.47	22' RT							1	
72+52.41	43' RT	1							
72+55.48	45' RT	1							
72+72.28	21' RT							1	
72+79.10	6' LT							1	
72+89.00	3' LT							1	
72+99.75	35' LT						1		
73+08.84	35' LT					1			
73+13.69	45' RT		1						
73+21.60	39' RT						1		
73+60.05	7' RT							1	
73+76.71	28' LT	1							
73+80.51	33' LT	1							
74+13.84	34' LT						1		
74+15.72	41' RT		1						
74+16.22	1' LT							1	
74+34.36	34' RT								1
75+22.11	4' LT							1	
75+25.54	34' RT								1
75+40.75	33' LT						1		
75+42.36	40' RT		1						
75+76.68	34' LT	1							
75+79.87	24' RT	1							
75+80.65	3' RT							1	
76+24.37	39' RT		1						
76+29.33	34' RT						1		
76+29.80	33' LT					1			
77+59.63	44' RT		1						
77+77.90	33' LT						1		
78+22.31	5' LT							1	
78+48.37	55' RT	1							
78+50.58	13' RT							1	
78+59.86	58' RT	1							
78+69.96	39' LT				1				
78+70.03	33' LT						1		
80+40.62	37' RT		1						
80+42.13	33' RT						1		
80+44.50	34' LT						1		
80+54.74	38' LT				1				
81+27.77	5' LT							1	
81+45.79	12' RT							1	
82+35.87	5' LT							1	
82+72.13	10' RT							1	
82+84.12	40' RT		1						
83+32.99	41' RT		1						
83+34.85	54' LT								1
83+41.88	3' LT							1	
83+43.91	35' RT						1		
83+56.15	35' RT					1			
83+69.23	24' LT	1							

ADJUSTMENT SCHEDULE

STATION +/-	OFFSET	56109210 WATER VALVES TO BE ADJUSTED	60255700 MANHOLES TO BE ADJUSTED WITH NEW TYPE 1 FRAME, OPEN LID	60255800 MANHOLES TO BE ADJUSTED WITH NEW TYPE 1 FRAME, CLOSED LID	60260300 INLETS TO BE ADJUSTED WITH NEW TYPE 1 FRAME, OPEN LID	60260500 INLETS TO BE ADJUSTED WITH NEW TYPE 3 FRAME AND GRATE	X6024503 INLETS TO BE ADJUSTED WITH NEW FRAME AND GRATE (SPECIAL)	X6025800 MANHOLES TO BE ADJUSTED WITH NEW TYPE 1 FRAME, CLOSED LID (SPECIAL)	60500060 REMOVING INLETS
		EACH	EACH	EACH	EACH	EACH	EACH	EACH	EACH
83+95.50	36' LT	1							
84+02.61	44' RT		1						
84+72.29	42' RT		1						
84+90.08	43' RT		1						
84+94.30	37' RT		1						
84+94.65	31' LT					1			
84+95.19	34' RT						1		
85+12.78	47' RT						1		
85+16.10	0' RT							1	
85+48.87	47' RT						1		
85+51.30	21' LT	1							
85+53.91	41' RT								1
85+83.73	36' LT	1							
85+91.14	32' LT	1							
86+87.35	33' LT	1							
86+99.29	31' RT		1						
86+99.94	27' LT								1
87+00.05	27' RT						1		
87+37.64	32' LT	1							
88+27.97	31' RT			1					
88+29.74	25' LT					1			
88+60.06	4' RT							1	
88+86.98	27' RT								1
90+32.70	48' LT					1			
90+51.89	39' LT				1				
90+67.91	9' RT							1	
90+88.65	35' LT					1			
91+33.09	14' LT	1							
CAROLINE ST.									
401+56.26	4' LT							1	
401+95.77	31' RT						1		
401+97.00	14' LT								1
402+12.87	26' RT							1	
BROWN ST.									
500+97.78	19' LT								1
501+00.39	19' RT						1		
501+09.70	21' LT								1
501+12.31	20' RT					1			
WHITE OAK RD.									
202+07.03	1' RT								1
202+22.21	13' LT		1						
202+45.07	33' LT							1	
202+60.97	21' LT								1
202+64.61	6' LT							1	
202+68.46	5' RT								1
204+78.67	21' LT					1			
HINSHAW AVE.									
2+52.32	24' RT								1
2+56.94	24' LT								1
2+59.48	21' RT							1	
2+62.17	9' LT							1	
2+83.41	24' RT								1
2+84.83	24' RT	1							
2+88.91	24' LT								1
	TOTAL	18	14	4	3	14	17	24	17

COMBINATION CONCRETE CURB AND GUTTER

LOCATION				TYPE B-6.18	TYPE B-6.24	TYPE B-6.18 (ABUTTING EXISTING PAVEMENT)	TYPE B-6.24 (ABUTTING EXISTING PAVEMENT)
				60604400	60605000	60604500	60605100
STATION	TO	STATION	SIDE	FOOT	FOOT	FOOT	FOOT
W MARKET ST							
62+75.6	TO	64+81.8	LT				97
62+75.6	TO	64+88.2	RT				170
64+81.8	TO	67+55.5	LT				187
64+88.2	TO	67+45.2	RT				187
68+33.9	TO	72+48.5	RT			54	240
68+41.4	TO	72+42.6	LT			38	379
72+42.6	TO	82+78.4	LT			1030	
72+48.5	TO	78+57.4	RT			391	
78+57.4	TO	83+05.0	RT			386	
83+24.8	TO	85+35.3	RT			160	
83+88.1	TO	89+99.9	LT			612	
85+35.3	TO	88+61.7	RT			269	
88+61.7	TO	90+65.3	RT			176	
91+09.9	TO	91+41.7	LT			32	
91+17.5	TO	91+42.6	RT			31	
MARTIN LUTHER KING JR. DR							
0+32.20	TO	0+88.84	LT				89
0+33.20	TO	0+88.84	RT				86
PEGGY LN							
300+44.28	TO	301+67.64	LT		139		
300+45.28	TO	301+67.64	RT		131		
CAROLINE ST							
401+21.06	TO	402+68.18	LT	179			
401+22.06	TO	402+68.18	RT			164	
BROWN ST							
500+05.35	TO	501+67.68	LT	215			
500+06.35	TO	501+67.68	RT			122	
WHITE OAK RD							
200+21.7	TO	201+91.8	RT	241			
200+44.9	TO	202+45.3	LT	217			
202+01.8	TO	205+33.8	RT	370			
202+45.3	TO	204+56.5	LT	219			
204+56.5	TO	205+33.8	LT	75			
STILLWELL ST							
0+89.66	TO	1+70.09	LT			98	
0+90.66	TO	1+70.09	RT			94	
HOLTON DR							
0+22.19	TO	0+54.01	LT			36	
0+23.19	TO	0+54.01	RT			51	
N HINSHAW AVE							
+13.3	TO	2+67.6	RT			264	
+37.7	TO	2+74.4	LT			283	
2+67.6	TO	3+01.3	RT			34	
2+74.4	TO	3+01.3	LT			46	
			TOTAL	1516	270	4373	1435

STEEL PLATE BEAM GUARDRAIL

STATION +/-	TO	STATION +/-	SIDE	STEEL PLATE BEAM GUARDRAIL, TYPE A, 6 FOOT POSTS	TRAFFIC BARRIER TERMINAL, TYPE 6	TRAFFIC BARRIER TERMINAL, TYPE 1 (SPECIAL) TANGENT	GUARDRAIL REFLECTORS, TYPE A	LINEAR DELINEATOR PANELS, 6 INCH	TERMINAL MARKER - DIRECT APPLIED
				FOOT	EACH	EACH	EACH	EACH	EACH
				63000001	63100085	63100167	78200005	X6350206	72501000
W MARKET ST									
68+42.3	TO	69+55.2	LT	25.0	1	1	4	1	1
			TOTAL	25.0	1	1	4	1	1

TEMPORARY INFORMATION SIGNING

DIRECTION	STREET	70030850 SQ FT
WB	MARKET ST	21
FR	MARKFT ST	21
NB	HINSHAW AVE	21
SB	HINSHAW AVE	21
SB	MLK DR	21
NB	PEGGY LN	21
NB	CAROLINE ST	21
NB	BROWN ST	21
SB	WHITE OAK	21
	TOTAL	189

NOTE: SIGNS SHALL BE PLACED IN ADVANCE OF THE PROJECT LIMITS AT THE NOTED LOCATIONS.

CONCRETE RETAINING WALL REMOVAL

LOCATION			Z0075496	
STATION +/-	TO	STATION +/-	SIDE	FOOT
W MARKET ST				
84+29	TO	84+71	RT	52
85+74	TO	87+48	RT	178
87+51	TO	87+83	RT	40
87+86	TO	88+19	RT	39
88+22	TO	88+44	RT	25
		TOTAL		333

GUARDRAIL REMOVAL

STATION +/-	TO	STATION +/-	SIDE	63200310 FOOT
W MARKET ST				
68+44	TO	69+55	LT	113
		TOTAL		113

CONCRETE STEP REMOVAL

LOCATION		Z0012455
STATION	SIDE	EACH
W MARKET ST		
86+64.1	LT	1
87+14.8	LT	1
87+49.4	RT	1
87+72.4	LT	1
87+84.6	RT	1
88+08.3	LT	1
88+20.2	RT	1
88+72.8	LT	1
	TOTAL	8

RELOCATE BENCH

STATION	OFFSET	X0327149 EACH
W MARKET ST		
77+31	47' LT	1
79+02	40' RT	1
	TOTAL	2

ISLAND REMOVAL

STATION +/-	TO	STATION +/-	SIDE	X4402805 SQ FT
W MARKET ST (MARTIN LUTHER KING JR DR INTERSECTION)				
64+28.9	TO	64+48.8	LT	207
			TOTAL	207

SURVEY MARKER, TYPE 2 (SPECIAL)

STATION	OFFSET	TYPE	XZ193400 EACH
W MARKET ST			
62+82.87	9.89' RT		1
68+61.44	0.00' CL		1
71+00.08	4.32' LT		1
72+39.77	0.00' CL		1
73+83.78	4.45' RT		1
75+27.42	0.00' CL		1
82+52.99	0.00' CL		1
90+76.51	0.00' CL		1
	TOTAL		8

ISLANDS AND MEDIANS

LOCATION			60608582 COMBINATION CONCRETE CURB AND GUTTER, TYPE M-6.24	60605000 COMBINATION CONCRETE CURB AND GUTTER, TYPE B-6.24	X6060300 CONCRETE MEDIAN, TYPE SB-6.24 (SPECIAL)	60618300 CONCRETE MEDIAN SURFACE, 4 INCH
STATION	TO	STATION	FOOT	FOOT	SQ FT	SQ FT
W MARKET ST						
64+37	TO	64+62	39			213
81+43	TO	82+93			900	
83+12	TO	84+62		275		1162
		TOTAL	39	275	900	1375

MODEL: Schedule Sheet 7
FILE NAME: V:\4216 - IL 9 Bloomington\CADD\CADD Sheets\D570855-sht-sched1sht-sdu1.dgn

Hutchison Engineering, Inc.

USER NAME = BDeCraene	DESIGNED -	REVISED -	
	DRAWN -	REVISED -	
PLOT SCALE = 0.16666633 ' / In.	CHECKED -	REVISED -	
PLOT DATE = 10/17/2023	DATE -	REVISED -	

STATE OF ILLINOIS
DEPARTMENT OF TRANSPORTATION

FAP 693 (IL RTE 9)
SCHEDULE OF QUANTITIES

SCALE: N/A | SHEET 7 OF 13 SHEETS | STA. | TO STA.

F.A.P. RTE.	SECTION	COUNTY	TOTAL SHEETS	SHEET NO.
693	(129)RS-4	McLEAN	218	30
		CONTRACT NO. 70855		
	ILLINOIS FED. AID PROJECT			

70300100 SHORT TERM PAVEMENT MARKING
70300150 SHORT TERM PAVEMENT MARKING REMOVAL

						SHORT TERM PAVEMENT MARKING	SHORT TERM PAVEMENT MARKING REMOVAL	
						70300100	70300150	
LOCATION		STATION	TO	STATION	OFFSET	QUANTITY (FT)	QUANTITY (SQ FT)	COLOR
IL 9	DOUBLE	62+75.64		64+34.67	L.T.	317.9	106.0	YELLOW
IL 9	DOUBLE	62+75.64		64+34.66	L.T.	318.0	106.0	YELLOW
IL 9	SOLID	62+75.64		64+32.64	R.T.	157.1	52.4	WHITE
IL 9	SKIP DASH	62+75.64		64+32.42	L.T.	157.1	52.4	WHITE
IL 9	SKIP DASH	62+75.64		64+32.42	R.T.	157.1	52.4	WHITE
IL 9	DOUBLE	64+34.67		64+36.66	L.T.	12.6	4.2	YELLOW
IL 9	STOP BAR	64+34.66			L.T.	36.0	72.0	WHITE
MARTIN LUTHER KING DR	STOP BAR	64+37.42			L.T.	17.9	35.9	WHITE
MARTIN LUTHER KING DR	STOP BAR	64+61.76			L.T.	23.6	47.2	WHITE
PEGGY LN	STOP BAR	64+93.54			R.T.	12.6	25.2	WHITE
IL 9	DOUBLE	65+36.80		65+38.80	R.T.	12.6	4.2	YELLOW
IL 9	DOUBLE	65+38.80		66+00.00	R.T.	122.4	40.8	YELLOW
IL 9	DOUBLE	65+38.79		66+00.00	R.T.	122.4	40.8	YELLOW
IL 9	STOP BAR	65+39.79			L.T.	43.9	87.8	WHITE
IL 9	SOLID	65+40.84		66+00.00	L.T.	59.1	19.7	WHITE
IL 9	SKIP DASH	65+40.84		66+00.00	L.T.	59.1	19.7	WHITE
IL 9	SKIP DASH	65+40.84		66+00.00	R.T.	59.1	19.7	WHITE
IL 9	SOLID	63+73.27		64+32.66	L.T.	70.6	23.5	WHITE
IL 9	SOLID	64+28.81		64+61.77	L.T.	97.6	32.5	WHITE
MARTIN LUTHER KING DR	DOUBLE	64+82.96		62+86.25	L.T.	197.5	65.8	YELLOW
MARTIN LUTHER KING DR	DOUBLE	64+86.95		64+89.76	L.T.	198.2	66.1	YELLOW
MARTIN LUTHER KING DR	DOUBLE	62+86.25		64+89.76	L.T.	12.6	4.2	YELLOW
MARTIN LUTHER KING DR	SOLID	64+59.40		64+61.70	L.T.	96.8	32.3	WHITE
MARTIN LUTHER KING DR	SOLID	64+71.29		64+74.20	L.T.	129.6	43.2	WHITE
MARTIN LUTHER KING DR	SOLID	64+45.51		64+61.77	L.T.	81.6	27.2	WHITE
MARTIN LUTHER KING DR	SOLID	64+35.84		64+50.38	L.T.	62.6	20.9	WHITE
IL 9	SOLID	66+00.00		66+34.78	L.T.	34.8	11.6	WHITE
IL 9	DOUBLE	66+00.00		66+60.88	R.T.	121.8	40.6	YELLOW
IL 9	DOUBLE	66+00.00		67+50.99	R.T.	299.9	100.0	YELLOW
IL 9	SKIP DASH	66+00.00		67+53.57	L.T.	153.6	51.2	WHITE
IL 9	SKIP DASH	66+00.00		67+48.40	R.T.	148.4	49.5	WHITE
IL 9	DOUBLE	66+60.88		67+50.99	R.T.	177.0	59.0	YELLOW
IL 9	SKIP DASH	67+48.40		68+35.68	R.T.	86.1	28.7	WHITE
IL 9	SKIP DASH	67+53.57		68+40.49	L.T.	86.1	28.7	WHITE
IL 9	DOUBLE	67+50.99		67+89.57	L.T.	76.5	25.5	YELLOW
IL 9	DOUBLE	67+89.57		68+16.97	L.T.	54.8	18.3	YELLOW
IL 9	DOUBLE	67+50.99		68+17.27	R.T.	134.9	45.0	YELLOW
IL 9	SOLID	68+16.97		68+37.08	L.T.	20.9	7.0	YELLOW
IL 9	SKIP DASH	68+16.97		68+37.08	L.T.	21.0	7.0	YELLOW
IL 9	SOLID	68+17.27		68+35.97	R.T.	18.7	6.2	YELLOW
IL 9	SKIP DASH	68+17.27		68+35.97	R.T.	18.7	6.2	YELLOW
IL 9	SKIP DASH	68+35.68		71+00.00	R.T.	265.2	88.4	WHITE
IL 9	SKIP DASH	68+40.49		71+00.00	L.T.	262.3	87.4	WHITE
IL 9	SOLID	68+37.08		69+08.72	L.T.	71.5	23.8	YELLOW
IL 9	SKIP DASH	68+37.08		69+08.72	L.T.	17.9	6.0	YELLOW
IL 9	SOLID	68+35.97		69+08.53	R.T.	73.3	24.4	YELLOW
IL 9	SKIP DASH	68+35.97		69+08.53	R.T.	18.3	6.1	YELLOW
IL 9	DOUBLE	69+08.72		71+00.00	L.T.	383.6	127.9	YELLOW
IL 9	DOUBLE	69+08.53		71+00.00	R.T.	383.8	127.9	YELLOW
IL 9	SOLID	70+64.53		71+00.00	R.T.	35.3	11.8	WHITE

70300100 SHORT TERM PAVEMENT MARKING (CONTINUED)
70300150 SHORT TERM PAVEMENT MARKING REMOVAL (CONTINUED)

						SHORT TERM PAVEMENT MARKING	SHORT TERM PAVEMENT MARKING REMOVAL	
						70300100	70300150	
LOCATION		STATION	TO	STATION	OFFSET	QUANTITY (FT)	QUANTITY (SQ FT)	COLOR
IL 9	DOUBLE	71+00.00		71+81.53	L.T.	163.1	54.4	YELLOW
IL 9	DOUBLE	71+00.00		71+81.53	L.T.	163.1	54.4	YELLOW
IL 9	SKIP DASH	71+00.00		71+81.53	L.T.	80.2	26.7	WHITE
IL 9	SKIP DASH	71+00.00		71+68.92	R.T.	68.3	22.8	WHITE
IL 9	SOLID	71+00.00		71+79.53	R.T.	79.5	26.5	WHITE
IL 9	STOP BAR	71+69.96			R.T.	20.9	7.0	WHITE
IL 9	STOP BAR	71+80.53			L.T.	24.0	8.0	WHITE
IL 9	DOUBLE	71+81.53		71+83.52	L.T.	6.3	2.1	YELLOW
CAROLINE ST	STOP BAR	72+34.49			R.T.	12.0	24.0	WHITE
CAROLINE ST	STOP BAR	72+85.13			R.T.	17.2	34.4	WHITE
CAROLINE ST	STOP BAR	72+36.51			L.T.	10.9	21.8	WHITE
IL 9	STOP BAR	72+91.59			L.T.	13.0	26.1	WHITE
IL 9	STOP BAR	72+95.59			L.T.	12.0	24.0	WHITE
IL 9	DOUBLE	72+95.81		72+97.81	R.T.	6.3	2.1	YELLOW
IL 9	SOLID	72+96.91		74+14.81	L.T.	117.7	39.2	WHITE
IL 9	SKIP DASH	72+97.44		77+00.00	L.T.	401.0	133.7	WHITE
IL 9	STOP BAR	72+97.81			R.T.	12.0	4.0	WHITE
IL 9	DOUBLE	72+97.81		74+14.81	R.T.	117.2	39.1	YELLOW
IL 9	DOUBLE	72+97.81		75+27.42	R.T.	230.4	76.8	YELLOW
IL 9	SKIP DASH	73+00.00		77+00.00	R.T.	400.9	133.6	WHITE
IL 9	DOUBLE	74+14.81		75+27.42	R.T.	113.0	37.7	YELLOW
IL 9	DOUBLE	75+27.42		75+71.18	L.T.	43.5	14.5	YELLOW
IL 9	DOUBLE	75+27.42		75+71.26	R.T.	43.5	14.5	YELLOW
IL 9	SOLID	75+71.18		77+00.00	L.T.	128.9	43.0	YELLOW
IL 9	SKIP DASH	75+71.18		77+00.00	L.T.	128.9	43.0	YELLOW
IL 9	SOLID	75+71.26		77+00.00	R.T.	128.7	42.9	YELLOW
IL 9	SKIP DASH	75+71.26		77+00.00	R.T.	128.7	42.9	YELLOW
CAROLINE ST	SOLID	72+44.61		72+58.85	R.T.	122.3	40.8	WHITE
IL 9	SOLID	77+00.00		77+41.20	L.T.	41.2	13.7	YELLOW
IL 9	SKIP DASH	77+00.00		77+41.20	L.T.	41.2	13.7	YELLOW
IL 9	SOLID	77+00.00		77+41.19	R.T.	41.2	13.7	YELLOW
IL 9	SKIP DASH	77+00.00		77+41.19	R.T.	41.2	13.7	YELLOW
IL 9	SKIP DASH	77+00.00		77+60.23	R.T.	60.2	20.1	WHITE
IL 9	SKIP DASH	77+00.00		77+70.03	L.T.	70.0	23.3	WHITE
IL 9	DOUBLE	77+41.2		77+78.4	L.T.	79.2	26.4	YELLOW
IL 9	DOUBLE	77+41.19		77+74.8	R.T.	70.7	23.6	YELLOW
IL 9	STOP BAR	77+74.8			R.T.	32.1	10.7	WHITE
IL 9	DOUBLE	77+74.8		77+79.37	R.T.	14.9	5.0	YELLOW
BROWN ST	STOP BAR	78+32.00			R.T.	11.0	3.7	WHITE
BROWN ST	STOP BAR	78+70.63			R.T.	13.0	4.3	WHITE
IL 9	DOUBLE	78+80.80		78+82.80	R.T.	12.6	4.2	YELLOW
IL 9	DOUBLE	78+82.80		79+99.80	R.T.	234.0	78.0	YELLOW
IL 9	DOUBLE	78+82.80		81+44.46	R.T.	523.3	174.4	YELLOW
IL 9	STOP BAR	78+84.80			L.T.	35.9	71.7	WHITE
IL 9	SOLID	78+84.80		79+99.80	L.T.	115.0	38.3	WHITE
IL 9	SKIP DASH	78+84.80		82+00.00	L.T.	315.2	105.1	WHITE
IL 9	SKIP DASH	78+85.06		82+00.00	R.T.	315.2	105.1	WHITE
IL 9	DOUBLE	79+99.80		82+00.00	R.T.	401.3	133.8	YELLOW
BROWN ST	DOUBLE	78+32.00		78+50.47	R.T.	230.0	76.7	YELLOW
BROWN ST	SOLID	78+42.95		78+59.14	R.T.	119.5	39.8	WHITE

MODEL: default
FILE NAME: pw:\\kaskaskia.bentley.com:kaskaskia-pw-01\Documents\IDOT Projects\17-1137.00 ORD\0 IDOT\CAD Sheets\D57\0855-pmk-sign-schedd01.dgn

Kaskaskia Engineering Group, LLC
200 E. Main St., Suite 101, Belleville, Illinois 62220
618.233.5077 phone
618.233.5975 fax
www.kaskaskiaeng.com
PROFESSIONAL DESIGN FIRMS
Illinois Professional Design Firm
Professional Engineering Group
LICENSE NO.
184.005713
20-5800165

USER NAME = mscerest	DESIGNED - MMS	REVISED -	
	DRAWN - MMS	REVISED -	
PLOT SCALE = 40.000 ' / in.	CHECKED - EJL	REVISED -	
PLOT DATE = 10/11/2023	DATE - 10-02-2023	REVISED -	

STATE OF ILLINOIS
DEPARTMENT OF TRANSPORTATION

FAP 693 (IL RTE 9)
SCHEDULE OF QUANTITIES

SCALE: _____ | SHEET 8 OF 13 SHEETS | STA. | TO STA.

F.A.P. RTE.	SECTION	COUNTY	TOTAL SHEETS	SHEET NO.
693	(129,109)RS3(16,4,1)	MCLEAN	218	31
		CONTRACT NO. 70855		
		ILLINOIS	FED. AID PROJECT	

70300100 SHORT TERM PAVEMENT MARKING (CONTINUED)
70300150 SHORT TERM PAVEMENT MARKING REMOVAL (CONTINUED)

						SHORT TERM PAVEMENT MARKING	SHORT TERM PAVEMENT MARKING REMOVAL	
						70300100	70300150	
LOCATION		STATION	TO	STATION	OFFSET	QUANTITY (FT)	QUANTITY (SQ FT)	COLOR
IL 9	RR BAR	80+77.10			R.T.	23.8	47.7	WHITE
IL 9	RR BAR	81+26.96			R.T.	23.8	47.7	WHITE
IL 9	DOUBLE	82+00.00		82+88.10	L.T.	175.8	58.6	YELLOW
IL 9	SKIP DASH	82+00.00		82+52.99	L.T.	53.0	17.7	WHITE
IL 9	SKIP DASH	82+00.00		82+78.91	R.T.	78.9	26.3	WHITE
IL 9	STOP BAR	82+80.75			R.T.	24.0	48.0	WHITE
IL 9	DOUBLE	83+08.09		84+66.74	L.T.	317.5	105.8	YELLOW
IL 9	SKIP DASH	83+78.51		87+49.85	R.T.	370.4	123.5	WHITE
IL 9	STOP BAR	83+95.06			L.T.	12.0	24.0	WHITE
IL 9	SOLID	84+56.29		86+20.07	R.T.	163.8	54.6	YELLOW
IL 9	SKIP DASH	84+56.29		86+20.07	R.T.	163.8	54.6	YELLOW
IL 9	SOLID	84+66.74		86+12.06	L.T.	145.2	48.4	YELLOW
IL 9	SKIP DASH	84+66.74		86+12.06	L.T.	36.6	12.2	YELLOW
STLLWELL ST	STOP BAR	85+30.96			R.T.	13.4	26.8	WHITE
IL 9	RR BAR	85+46.93			L.T.	11.8	3.9	WHITE
IL 9	RR BAR	85+96.79			L.T.	11.8	3.9	WHITE
IL 9	DOUBLE	86+12.06		88+00.00	L.T.	375.8	125.3	YELLOW
IL 9	DOUBLE	86+20.07		88+00.00	R.T.	359.9	120.0	YELLOW
WHITE OAK RD	SKIP DASH	200+54.23		201+00.00	C.L.	45.8	15.3	YELLOW
STILLEWELL ST	DOUBLE	85+31.84		85+38.30	R.T.	117.1	39.0	YELLOW
IL 9	DOUBLE	88+00.00		88+84.63	L.T.	169.2	56.4	YELLOW
IL 9	DOUBLE	88+00.00		88+84.63	L.T.	169.3	56.4	YELLOW
IL 9	DOUBLE	88+84.63		90+24.63	L.T.	280.0	93.3	YELLOW
IL 9	STOP BAR	90+24.63			L.T.	12.0	24.0	WHITE
IL 9	STOP BAR	90+38.07			R.T.	16.7	33.4	WHITE
HINSHAW AVE	STOP BAR	90+95.1			R.T.	12.0	24.0	WHITE
HINSHAW AVE	STOP BAR	91+2.49			R.T.	10.6	21.1	WHITE
IL 9	STOP BAR	91+18.32			L.T.	11.4	22.8	WHITE
IL 9	STOP BAR	91+24.97			R.T.	11.2	22.4	WHITE
IL 9	DOUBLE	91+25.99		91+41.70	R.T.	31.7	10.6	YELLOW
N HINSHAW AVE	SOLID	0+47.05		1+00.00	L.T.	51.9	17.3	WHITE
HINSHAW AVE	STOP BAR	0+47.05			L.T.	11.5	23.0	WHITE
HINSHAW AVE	STOP BAR	0+54.80			L.T.	18.4	36.9	WHITE
HINSHAW AVE	STOP BAR	0+77.39			L.T.	12.0	24.0	WHITE
N HINSHAW AVE	DOUBLE	0+77.39		1+00.00	R.T.	43.2	14.4	YELLOW
WHITE OAK RD	STOP BAR	200+62.86			L.T.	14.9	29.9	WHITE
WHITE OAK RD	SKIP DASH	201+00.00		206+64.23	C.L.	2258.4	752.8	YELLOW
LOCUST ST	STOP BAR	100+45.41			L.T.	13.7	27.5	WHITE
LOCUST ST	SKIP DASH	100+64.81		107+94.84	L.T.	748.0	249.3	YELLOW
LOCUST	STOP BAR	0+9.48			L.T.	22.1	44.2	WHITE
N HINSHAW AVE	SOLID	1+00.00		1+63.99	L.T.	64.0	21.3	WHITE
N HINSHAW AVE	DOUBLE	1+00.00		2+47.39	R.T.	295.1	98.4	YELLOW
				TOTAL		17495.0	6663.0	

78000200 THERMOPLASTIC PAVEMENT MARKING - LINE 4"
78009004 MODIFIED URETHANE PAVEMENT MARKING - LINE 4"
78011025 GROOVING FOR RECESSED PAVEMENT MARKING 5"

						THERMOPLASTIC PAVEMENT MARKING - LINE 4"	MODEFIED URETHANE PAVEMENT MARKING - LINE 4"	GROOVING FOR RECESSED PAVEMENT MARKING 5"	
						78000200	78009004	78011025	
LOCATION		STATION	TO	STATION	OFFSET	QUANTITY (FT)	QUANTITY (FT)	QUANTITY (FT)	COLOR
IL 9	DOUBLE	62+75.64		64+34.67	L.T.	317.9		317.9	YELLOW
IL 9	DOUBLE	62+75.64		64+34.66	L.T.	318.0		318.0	YELLOW
IL 9	SOLID	62+75.64		64+32.64	R.T.	157.1		157.1	WHITE
IL 9	SKIP DASH	62+75.64		64+32.42	L.T.	39.3		39.3	WHITE
IL 9	SKIP DASH	62+75.64		64+32.42	R.T.	39.3		39.3	WHITE
IL 9	DOUBLE	64+34.67		64+36.66	L.T.	12.6		12.6	YELLOW
IL 9	DOUBLE	65+36.80		65+38.80	R.T.	12.6		12.6	YELLOW
IL 9	DOUBLE	65+38.80		66+00.00	R.T.	122.4		122.4	YELLOW
IL 9	DOUBLE	65+38.79		66+00.00	R.T.	122.4		122.4	YELLOW
IL 9	SOLID	65+40.84		66+00.00	L.T.	59.1		59.1	WHITE
IL 9	SKIP DASH	65+40.84		66+00.00	L.T.	14.8		14.8	WHITE
IL 9	SKIP DASH	65+40.84		66+00.00	R.T.	14.8		14.8	WHITE
IL 9	SOLID	63+73.27		64+32.66	L.T.	70.6		70.6	WHITE
IL 9	SOLID	64+28.81		64+61.77	L.T.	97.6		97.6	WHITE
MARTIN LUTHER KING DR	DOUBLE	64+82.96		62+86.25	L.T.	197.5		197.5	YELLOW
MARTIN LUTHER KING DR	DOUBLE	64+86.95		64+89.76	L.T.	198.2		198.2	YELLOW
MARTIN LUTHER KING DR	DOUBLE	62+86.25		64+89.76	L.T.	12.6		12.6	YELLOW
MARTIN LUTHER KING DR	SOLID	64+59.40		64+61.70	L.T.	96.8		96.8	WHITE
MARTIN LUTHER KING DR	SOLID	64+71.29		64+74.20	L.T.	129.6		129.6	WHITE
MARTIN LUTHER KING DR	SOLID	64+45.51		64+61.77	L.T.	81.6		81.6	WHITE
MARTIN LUTHER KING DR	SOLID	64+35.84		64+50.38	L.T.	62.6		62.6	WHITE
IL 9	SOLID	66+00.00		66+34.78	L.T.	34.8		34.8	WHITE
IL 9	DOUBLE	66+00.00		66+60.88	R.T.	121.8		121.8	YELLOW
IL 9	DOUBLE	66+00.00		67+50.99	R.T.	299.9		299.9	YELLOW
IL 9	SKIP DASH	66+00.00		67+53.57	L.T.	38.4		38.4	WHITE
IL 9	SKIP DASH	66+00.00		67+48.40	R.T.	37.1		37.1	WHITE
IL 9	DOUBLE	66+60.88		67+50.99	R.T.	177.0		177.0	YELLOW
IL 9	SKIP DASH	67+48.40		68+35.68	R.T.		21.5	21.5	WHITE
IL 9	SKIP DASH	67+53.57		68+40.49	L.T.		21.5	21.5	WHITE
IL 9	DOUBLE	67+50.99		67+89.57	L.T.		76.5	76.5	YELLOW
IL 9	DOUBLE	67+89.57		68+16.97	L.T.		54.8	54.8	YELLOW
IL 9	DOUBLE	67+50.99		68+17.27	R.T.		134.9	134.9	YELLOW
IL 9	SOLID	68+16.97		68+37.08	L.T.		86.1	86.1	WHITE
IL 9	SKIP DASH	68+35.68		71+00.00	R.T.	66.3		66.3	WHITE
IL 9	SKIP DASH	68+40.49		71+00.00	L.T.	65.6		65.6	WHITE
IL 9	SOLID	68+37.08		69+08.72	L.T.	71.5		71.5	YELLOW
IL 9	SKIP DASH	68+37.08		69+08.72	L.T.	17.9		17.9	YELLOW
IL 9	SOLID	68+35.97		69+08.53	R.T.	73.3		73.3	YELLOW
IL 9	SKIP DASH	68+35.97		69+08.53	R.T.	18.3		18.3	YELLOW
IL 9	DOUBLE	69+08.72		71+00.00	L.T.	383.6		383.6	YELLOW
IL 9	DOUBLE	69+08.53		71+00.00	R.T.	383.8		383.8	YELLOW
IL 9	SOLID	70+64.53		71+00.00	R.T.	35.3		35.3	WHITE

78000200 THERMOPLASTIC PAVEMENT MARKING - LINE 4" (CONTINUED)
78009004 MODIFIED URETHANE PAVEMENT MARKING - LINE 4" (CONTINUED)
78011025 GROOVING FOR RECESSED PAVEMENT MARKING 5" (CONTINUED)

						THERMOPLASTIC PAVEMENT MARKING - LINE 4"	MODEFIED URETHANE PAVEMENT MARKING - LINE 4"	GROOVING FOR RECESSED PAVEMENT MARKING 5"	
						78000200	78009004	78011025	
LOCATION		STATION	TO	STATION	OFFSET	QUANTITY (FT)	QUANTITY (FT)	QUANTITY (FT)	COLOR
IL 9	DOUBLE	71+00.00		71+81.53	L.T.	163.1		163.1	YELLOW
IL 9	DOUBLE	71+00.00		71+81.53	L.T.	163.1		163.1	YELLOW
IL 9	SKIP DASH	71+00.00		71+81.53	L.T.	20.1		20.1	WHITE
IL 9	SKIP DASH	71+00.00		71+68.92	R.T.	17.1		17.1	WHITE
IL 9	SOLID	71+00.00		71+79.53	R.T.	79.5		79.5	WHITE
IL 9	DOUBLE	71+81.53		71+83.52	L.T.	6.3		6.3	YELLOW
IL 9	DOUBLE	72+95.81		72+97.81	R.T.	6.3		6.3	YELLOW
IL 9	SOLID	72+96.91		74+14.81	L.T.	117.7		117.7	WHITE
IL 9	SKIP DASH	72+97.44		77+00.00	L.T.	100.2		100.2	WHITE
IL 9	DOUBLE	72+97.81		74+14.81	R.T.	117.2		117.2	YELLOW
IL 9	DOUBLE	72+97.81		75+27.42	R.T.	230.4		230.4	YELLOW
IL 9	SKIP DASH	73+00.00		77+00.00	R.T.	100.2		100.2	WHITE
IL 9	DOUBLE	74+14.81		75+27.42	R.T.	113.0		113.0	YELLOW
IL 9	DOUBLE	75+27.42		75+71.18	L.T.	43.5		43.5	YELLOW
IL 9	DOUBLE	75+27.42		75+71.26	R.T.	43.5		43.5	YELLOW
IL 9	SOLID	75+71.18		77+00.00	L.T.	128.9		128.9	YELLOW
IL 9	SKIP DASH	75+71.18		77+00.00	L.T.	32.2		32.2	YELLOW
IL 9	SOLID	75+71.26		77+00.00	R.T.	128.7		128.7	YELLOW
IL 9	SKIP DASH	75+71.26		77+00.00	R.T.	32.2		32.2	YELLOW
CAROLINE ST	SOLID	72+44.61		72+58.85	R.T.	122.3		122.3	WHITE
IL 9	SOLID	77+00.00		77+41.20	L.T.	41.2		41.2	YELLOW
IL 9	SKIP DASH	77+00.00		77+41.20	L.T.	10.3		10.3	YELLOW
IL 9	SOLID	77+00.00		77+41.19	R.T.	41.2		41.2	YELLOW
IL 9	SKIP DASH	77+00.00		77+41.19	R.T.	10.3		10.3	YELLOW
IL 9	SKIP DASH	77+00.00		77+60.23	R.T.	15.1		15.1	WHITE
IL 9	SKIP DASH	77+00.00		77+70.03	L.T.	17.5		17.5	WHITE
IL 9	DOUBLE	77+41.2		77+78.4	L.T.	79.2		79.2	YELLOW
IL 9	DOUBLE	77+41.19		77+74.8	R.T.	70.7		70.7	YELLOW
IL 9	DOUBLE	77+74.8		77+79.37	R.T.	14.9		14.9	YELLOW
IL 9	DOUBLE	78+80.80		78+82.80	R.T.	12.6		12.6	YELLOW
IL 9	DOUBLE	78+82.80		79+99.80	R.T.	234.0		234.0	YELLOW
IL 9	DOUBLE	78+82.80		81+44.46	R.T.	523.3		523.3	YELLOW
IL 9	SOLID	78+84.80		79+99.80	L.T.	115.0		115.0	WHITE
IL 9	SKIP DASH	78+84.80		82+00.00	L.T.	78.8		78.8	WHITE
IL 9	SKIP DASH	78+85.06		82+00.00	R.T.	78.8		78.8	WHITE
IL 9	DOUBLE	79+99.80		82+00.00	R.T.	401.3		401.3	YELLOW
BROWN ST	DOUBLE	78+32.00		78+50.47	R.T.	230.0		230.0	YELLOW
BROWN ST	SOLID	78+42.95		78+59.14	R.T.	119.5		119.5	WHITE

78000200 THERMOPLASTIC PAVEMENT MARKING - LINE 4" (CONTINUED)
78009004 MODIFIED URETHANE PAVEMENT MARKING - LINE 4" (CONTINUED)
78011025 GROOVING FOR RECESSED PAVEMENT MARKING 5" (CONTINUED)

						THERMOPLASTIC PAVEMENT MARKING - LINE 4"	MODEFIED URETHANE PAVEMENT MARKING - LINE 4"	GROOVING FOR RECESSED PAVEMENT MARKING 5"	
						78000200	78009004	78011025	
LOCATION		STATION	TO	STATION	OFFSET	QUANTITY (FT)	QUANTITY (FT)	QUANTITY (FT)	COLOR
IL 9	DOUBLE	82+00.00		82+88.10	L.T.	175.8		175.8	YELLOW
IL 9	SKIP DASH	82+00.00		82+52.99	L.T.	13.2		13.2	WHITE
IL 9	SKIP DASH	82+00.00		82+78.91	R.T.	19.7		19.7	WHITE
IL 9	DOUBLE	83+08.09		84+66.74	L.T.	317.5		317.5	YELLOW
IL 9	SKIP DASH	83+78.51		87+49.85	R.T.	92.6		92.6	WHITE
IL 9	SOLID	84+56.29		86+20.07	R.T.	163.8		163.8	YELLOW
IL 9	SKIP DASH	84+56.29		86+20.07	R.T.	41.0		41.0	YELLOW
IL 9	SOLID	84+66.74		86+12.06	L.T.	145.2		145.2	YELLOW
IL 9	SKIP DASH	84+66.74		86+12.06	L.T.	36.3		36.3	YELLOW
IL 9	DOUBLE	86+12.06		88+00.00	L.T.	375.8		375.8	YELLOW
IL 9	DOUBLE	86+20.07		88+00.00	R.T.	359.9		359.9	YELLOW
IL 9	LANE EXT	87+52.53		88+00.00	R.T.	47.1		47.1	WHITE
WHITE OAK RD	SKIP DASH	200+54.23		201+00.00	C.L.	45.8		45.8	YELLOW
STILLEWELL ST	DOUBLE	85+31.84		85+38.30	R.T.	117.1		117.1	YELLOW
IL 9	DOUBLE	88+00.00		88+84.63	L.T.	169.2		169.2	YELLOW
IL 9	DOUBLE	88+00.00		88+84.63	L.T.	169.3		169.3	YELLOW
IL 9	LANE EXT	88+00.00		88+84.69	L.T.	84.9		84.9	WHITE
IL 9	DOUBLE	88+84.63		90+24.63	L.T.	280.0		280.0	YELLOW
IL 9	DOUBLE	91+25.99		91+41.70	R.T.	31.7		31.7	YELLOW
N HINSHAW AVE	SOLID	0+47.05		1+00.00	L.T.	51.9		51.9	WHITE
N HINSHAW AVE	DOUBLE	0+77.39		1+00.00	R.T.	43.2		43.2	YELLOW
WHITE OAK RD	SKIP DASH	201+00.00		206+64.23	C.L.	141.2		141.2	YELLOW
LOCUST ST	SKIP DASH	100+64.81		107+94.84	L.T.	187.0		187.0	YELLOW
N HINSHAW AVE	SOLID	1+00.00		1+63.99	L.T.	64.0		64.0	WHITE
N HINSHAW AVE	DOUBLE	1+00.00		2+47.39	R.T.	295.1		295.1	YELLOW
N HINSHAW AVE	LANE EXT	1+63.39		2+47.39	R.T.	84.1		84.1	WHITE
				TOTAL		11413.0	396.0	11809.0	

78000200 THERMOPLASTIC PAVEMENT MARKING - LINE 24"
78011125 GROOVING FOR RECESSED PAVEMENT MARKING 25"

				THERMOPLASTIC PAVEMENT MARKING - LINE 24"	GROOVING FOR RECESSED PAVEMENT MARKING 25"	
				78000650	78011125	
LOCATION		STATION	Offset	QUANTITY (FT)	QUANTITY (FT)	COLOR
IL 9	STOP BAR	64+34.66	L.T.	36.0	36.0	WHITE
MARTIN LUTHER KING DR	STOP BAR	64+37.42	L.T.	17.9	17.9	WHITE
MARTIN LUTHER KING DR	STOP BAR	64+61.76	L.T.	23.6	23.6	WHITE
IL 9	STOP BAR	65+39.79	L.T.	43.9	43.9	WHITE
PEGGY LN	STOP BAR	64+93.54	R.T.	12.6	12.6	WHITE
IL 9	STOP BAR	71+69.96	R.T.	20.9	20.9	WHITE
IL 9	STOP BAR	71+80.53	L.T.	24.0	24.0	WHITE
CAROLINE ST	STOP BAR	72+34.49	R.T.	12.0	12.0	WHITE
CAROLINE ST	STOP BAR	72+85.13	R.T.	17.2	17.2	WHITE
CAROLINE ST	STOP BAR	72+36.51	L.T.	10.9	10.9	WHITE
IL 9	STOP BAR	72+91.59	L.T.	13.0	13.0	WHITE
IL 9	STOP BAR	72+95.59	L.T.	12.0	12.0	WHITE
IL 9	STOP BAR	72+97.81	R.T.	12.0	12.0	WHITE
IL 9	STOP BAR	77+74.8	R.T.	32.1	32.1	WHITE
BROWN ST	STOP BAR	78+32	R.T.	11.0	11.0	WHITE
BROWN ST	STOP BAR	78+70.63	R.T.	13.0	13.0	WHITE
IL 9	STOP BAR	78+84.80	L.T.	35.9	35.9	WHITE
IL 9	RR BAR	80+77.10	R.T.	23.8	23.8	WHITE
IL 9	RR BAR	81+26.96	R.T.	23.8	23.8	WHITE
IL 9	STOP BAR	82+80.75	R.T.	24.0	24.0	WHITE
WHITE OAK RD	STOP BAR	200+62.86	L.T.	14.9	14.9	WHITE
IL 9	STOP BAR	83+95.06	L.T.	12.0	12.0	WHITE
STLLWELL ST	STOP BAR	85+30.96	R.T.	13.4	13.4	WHITE
IL 9	RR BAR	85+46.93	L.T.	11.8	11.8	WHITE
IL 9	RR BAR	85+96.79	L.T.	11.8	11.8	WHITE
IL 9	STOP BAR	90+24.63	L.T.	12.0	12.0	WHITE
HINSHAW AVE	STOP BAR	0+54.80	L.T.	18.4	18.4	WHITE
HINSHAW AVE	STOP BAR	0+47.05	L.T.	11.5	11.5	WHITE
HINSHAW AVE	STOP BAR	0+77.39	L.T.	12.0	12.0	WHITE
IL 9	STOP BAR	90+38.07	R.T.	16.7	16.7	WHITE
HINSHAW AVE	STOP BAR	90+95.1	R.T.	12.0	12.0	WHITE
HINSHAW AVE	STOP BAR	91+2.49	R.T.	10.6	10.6	WHITE
IL 9	STOP BAR	91+18.32	L.T.	11.4	11.4	WHITE
IL 9	STOP BAR	91+24.97	R.T.	11.2	11.2	WHITE
LOCUST	STOP BAR	100+45.41	L.T.	13.7	13.7	WHITE
LOCUST	STOP BAR	0+9.48	L.T.	22.1	22.1	WHITE
		TOTAL		636.0	636.0	

MODEL: Default
FILE NAME: pw://keg-pw.bentley.com:keg-pw-01/Documents/IDOT Projects\17-11137.00 QRD\0 IDOT\CAD Sheets\DS70855-gmnt-sgn-sched003.dgn

Kaskaskia Engineering Group, LLC
PROFESSIONAL DESIGNATIONS
Illinois Professional Design Firm
Professional Engineering Group
LICENSE NO.
184.007733
20-5000165

USER NAME = msecrest	DESIGNED - MMS	REVISED -	
	DRAWN - MMS	REVISED -	
PLOT SCALE = 40.000 ' / in.	CHECKED - EJL	REVISED -	
PLOT DATE = 10/11/2023	DATE - 10-02-2023	REVISED -	

STATE OF ILLINOIS
DEPARTMENT OF TRANSPORTATION

FAP 693 (IL RTE 9)
SCHEDULE OF QUANTITIES

SCALE: _____ | SHEET 10 OF 13 SHEETS | STA. | TO STA.

F.A.P. RTE.	SECTION	COUNTY	TOTAL SHEETS	SHEET NO.
693	(129,109)RS3(16,4,1)	MCLEAN	218	33
		CONTRACT NO. 70855		
	ILLINOIS	FED. AID PROJECT		

78000400 THERMOPLASTIC PAVEMENT MARKING - LINE 6"
78011035 GROOVING FOR RECESSED PAVEMENT MARKING 7" (CONTINUED)

						THERMOPLASTIC PAVEMENT MARKING - LINE 6"	GROOVING FOR RECESSED PAVEMENT MARKING 7"	
						78000400	78011035	
LOCATION		STATION	TO	STATION	OFFSET	QUANTITY (FT)	QUANTITY (FT)	COLOR
IL 9	CROSSWALK	64+45.9			C.L.	129.8	129.8	WHITE
MARTIN LUTHER KING DR	CROSSWALK	64+91.5			L.T.	121.9	121.9	WHITE
PEGGY LANE	CROSSWALK	64+90.3			R.T.	74.8	74.8	WHITE
CAROLINE ST	CROSSWALK	72+44.6			R.T.	249.7	249.7	WHITE
CAROLINE ST	ISLAND	72+52.1			R.T.	139.5	139.5	WHITE
CAROLINE ST	CROSSWALK	72+46.8			L.T.	45.3	45.3	WHITE
IL 9	CROSSWALK	72+92.6			C.L.	156.6	156.6	WHITE
IL 9	CROSSWALK	77+83.4			C.L.	145.8	145.8	WHITE
BROWN ST	CROSSWALK	78+33.2			R.T.	200.1	200.1	WHITE
BROWN ST	ISLAND	78+48.9			R.T.	99.1	99.1	WHITE
IL 9		83+61.6		84+25.	L.T.	80.4	80.4	WHITE
STILLWELL ST	CROSSWALK	85+26.4			R.T.	98.4	98.4	WHITE
IL 9		88+59.9		89+37.3	L.T.	84.3	84.3	WHITE
HOLTON DR	CROSSWALK	88+64.2			R.T.	48.4	48.4	WHITE
IL 9	CROSSWALK	90+44.9			C.L.	155.7	155.7	WHITE
HINSHAW AVE	CROSSWALK	90+61.9			L.T.	115.3	115.3	WHITE
HINSHAW AVE	CROSSWALK	90+94.3			R.T.	117.3	117.3	WHITE
IL 9	CROSSWALK	91+12.3			C.L.	112.5	112.5	WHITE
LOCUST	CROSSWALK	100+37.7			C.L.	73.8	73.8	WHITE
LOCUST	CROSSWALK	+74.7			C.L.	84.8	84.8	WHITE
				TOTAL		2334.0	2334.0	

78000600 THERMOPLASTIC PAVEMENT MARKING - LINE 12"
78009012 MODIFIED URETHANE PAVEMENT MARKING - LINE 12"
78011065 GROOVING FOR RECESSED PAVEMENT MARKING 13"

				THERMOPLASTIC PAVEMENT MARKING - LINE 12"	MODEFIED URETHANE PAVEMENT MARKING - LINE 12"	GROOVING FOR RECESSED PAVEMENT MARKING 13"	
				78000600	78009012	78011065	
LOCATION		STATION	OFFSET	QUANTITY (FT)	QUANTITY (FT)	QUANTITY (FT)	COLOR
MARTIN LUTHER KING DR	DIAGONAL	63+73.59	L.T.	3.8		3.8	WHITE
MARTIN LUTHER KING DR	DIAGONAL	64+11.86	L.T.	10.6		10.6	WHITE
MARTIN LUTHER KING DR	DIAGONAL	64+26.27	L.T.	7.5		7.5	WHITE
MARTIN LUTHER KING DR	DIAGONAL	64+57.32	L.T.	2.9		2.9	WHITE
MARTIN LUTHER KING DR	DIAGONAL	64+61.75	L.T.	2.7		2.7	WHITE
MARTIN LUTHER KING DR	DIAGONAL	64+59.81	L.T.	1.3		1.3	WHITE
MARTIN LUTHER KING DR	DIAGONAL	64+61.75	L.T.	1.2		1.2	WHITE
MARTIN LUTHER KING DR	DIAGONAL	64+61.24	L.T.	0.3		0.3	WHITE
MARTIN LUTHER KING DR	DIAGONAL	64+61.72	L.T.	0.3		0.3	WHITE
IL 9	DIAGONAL	65+54.08	R.T.	4.2		4.2	YELLOW
IL 9	DIAGONAL	65+74.07	R.T.	4.2		4.2	YELLOW
IL 9	DIAGONAL	65+94.06	R.T.	4.2		4.2	YELLOW
IL 9	DIAGONAL	66+14.05	R.T.	4.2		4.2	YELLOW
IL 9	DIAGONAL	66+34.04	R.T.	4.2		4.2	YELLOW
IL 9	DIAGONAL	66+54.03	R.T.	4.2		4.2	YELLOW
IL 9	DIAGONAL	66+73.04	R.T.	5.6		5.6	YELLOW
IL 9	DIAGONAL	66+91.55	R.T.	7.7		7.7	YELLOW
IL 9	DIAGONAL	67+10.07	R.T.	9.8		9.8	YELLOW
IL 9	DIAGONAL	67+28.62	L.T.	11.9		11.9	YELLOW
IL 9	DIAGONAL	67+47.16	L.T.		13.9	13.9	YELLOW
IL 9	DIAGONAL	67+65.76	L.T.		15.9	15.9	YELLOW
IL 9	DIAGONAL	67+84.36	L.T.		17.8	17.8	YELLOW
IL 9	DIAGONAL	68+3.96	L.T.		18.4	18.4	YELLOW
IL 9	DIAGONAL	68+23.98	L.T.		18.4	18.4	YELLOW
IL 9	DIAGONAL	68+43.99	L.T.	18.4		18.4	YELLOW
IL 9	DIAGONAL	68+63.26	L.T.	18.4		18.4	YELLOW
IL 9	DIAGONAL	68+79.99	L.T.	18.4		18.4	YELLOW
IL 9	DIAGONAL	69+5.71	L.T.	19.0		19.0	YELLOW
IL 9	DIAGONAL	69+28.72	L.T.	18.1		18.1	YELLOW
IL 9	DIAGONAL	69+48.53	L.T.	16.7		16.7	YELLOW
IL 9	DIAGONAL	69+68.47	L.T.	14.9		14.9	YELLOW
IL 9	DIAGONAL	69+88.47	L.T.	13.0		13.0	YELLOW
IL 9	DIAGONAL	70+8.37	L.T.	10.9		10.9	YELLOW
IL 9	DIAGONAL	70+28.30	L.T.	8.5		8.5	YELLOW
IL 9	DIAGONAL	70+48.23	L.T.	6.0		6.0	YELLOW
IL 9	DIAGONAL	70+68.17	L.T.	4.2		4.2	YELLOW
IL 9	DIAGONAL	70+88.10	L.T.	4.2		4.2	YELLOW
IL 9	DIAGONAL	71+8.04	L.T.	4.2		4.2	YELLOW
IL 9	DIAGONAL	71+27.97	L.T.	4.2		4.2	YELLOW
IL 9	DIAGONAL	71+47.90	L.T.	4.3		4.3	YELLOW
IL 9	DIAGONAL	71+67.84	L.T.	4.3		4.3	YELLOW
CAROLINE ST	DIAGONAL	72+44.25	R.T.	12.3		12.3	WHITE
CAROLINE ST	DIAGONAL	72+70.8	R.T.	17.7		17.7	WHITE
CAROLINE ST	DIAGONAL	72+45.47	R.T.	9.9		9.9	WHITE
CAROLINE ST	DIAGONAL	72+65.04	R.T.	12.7		12.7	WHITE
CAROLINE ST	DIAGONAL	72+46.68	R.T.	7.4		7.4	WHITE
CAROLINE ST	DIAGONAL	72+60.08	R.T.	8.5		8.5	WHITE
CAROLINE ST	DIAGONAL	72+47.88	R.T.	4.7		4.7	WHITE
CAROLINE ST	DIAGONAL	72+55.94	R.T.	5.1		5.1	WHITE
CAROLINE ST	DIAGONAL	72+49.07	R.T.	2.0		2.0	WHITE
CAROLINE ST	DIAGONAL	72+52.65	R.T.	2.4		2.4	WHITE

78000600 THERMOPLASTIC PAVEMENT MARKING - LINE 12" (CONTINUED)
78009012 MODIFIED URETHANE PAVEMENT MARKING - LINE 12" (CONTINUED)
78011065 GROOVING FOR RECESSED PAVEMENT MARKING 13" (CONTINUED)

				THERMOPLASTIC PAVEMENT MARKING - LINE 12"	MODEFIED URETHANE PAVEMENT MARKING - LINE 12"	GROOVING FOR RECESSED PAVEMENT MARKING 13"	
				78000600	78009012	78011065	
LOCATION		STATION	OFFSET	QUANTITY (FT)	QUANTITY (FT)	QUANTITY (FT)	COLOR
IL 9	DIAGONAL	73+4.79	R.T.	4.2		4.2	YELLOW
IL 9	DIAGONAL	73+24.72	R.T.	4.2		4.2	YELLOW
IL 9	DIAGONAL	73+44.66	R.T.	4.2		4.2	YELLOW
IL 9	DIAGONAL	73+64.59	R.T.	4.2		4.2	YELLOW
IL 9	DIAGONAL	73+84.53	R.T.	4.2		4.2	YELLOW
IL 9	DIAGONAL	74+4.46	R.T.	4.2		4.2	YELLOW
IL 9	DIAGONAL	74+23.48	R.T.	5.5		5.5	YELLOW
IL 9	DIAGONAL	74+41.60	R.T.	8.1		8.1	YELLOW
IL 9	DIAGONAL	74+59.84	R.T.	10.5		10.5	YELLOW
IL 9	DIAGONAL	74+78.22	L.T.	12.7		12.7	YELLOW
IL 9	DIAGONAL	74+96.73	L.T.	14.7		14.7	YELLOW
IL 9	DIAGONAL	75+15.38	L.T.	16.5		16.5	YELLOW
IL 9	DIAGONAL	75+3423	L.T.	18.1		18.1	YELLOW
IL 9	DIAGONAL	75+53.11	L.T.	19.7		19.7	YELLOW
IL 9	DIAGONAL	77+46.27	L.T.	21.0		21.0	YELLOW
IL 9	DIAGONAL	77+65.75	L.T.	16.0		16.0	YELLOW
BROWN ST	DIAGONAL	78+43.37	R.T.	6.0		6.0	WHITE
BROWN ST	DIAGONAL	78+56.39	R.T.	8.6		8.6	WHITE
BROWN ST	DIAGONAL	78+44.79	R.T.	3.8		3.8	WHITE
BROWN ST	DIAGONAL	78+52.17	R.T.	4.7		4.7	WHITE
BROWN ST	DIAGONAL	78+46.20	R.T.	1.9		1.9	WHITE
BROWN ST	DIAGONAL	78+49.22	R.T.	1.9		1.9	WHITE
IL 9	DIAGONAL	78+89.79	R.T.	4.2		4.2	YELLOW
IL 9	DIAGONAL	79+9.79	R.T.	4.2		4.2	YELLOW
IL 9	DIAGONAL	79+29.79	R.T.	4.2		4.2	YELLOW
IL 9	DIAGONAL	79+49.79	R.T.	4.2		4.2	YELLOW
IL 9	DIAGONAL	79+69.79	R.T.	4.2		4.2	YELLOW
IL 9	DIAGONAL	79+89.79	R.T.	4.2		4.2	YELLOW
IL 9	DIAGONAL	80+9.08	R.T.	5.2		5.2	YELLOW
IL 9	DIAGONAL	80+27.67	R.T.	7.2		7.2	YELLOW
IL 9	DIAGONAL	80+46.25	R.T.	9.2		9.2	YELLOW
IL 9	DIAGONAL	80+64.84	L.T.	11.2		11.2	YELLOW
IL 9	DIAGONAL	80+83.43	L.T.	13.2		13.2	YELLOW
IL 9	DIAGONAL	81+2.02	L.T.	15.2		15.2	YELLOW
IL 9	DIAGONAL	81+20.60	L.T.	17.2		17.2	YELLOW
IL 9	DIAGONAL	81+39.19	L.T.	11.4		11.4	YELLOW
IL 9	DIAGONAL	81+57.78	L.T.	13.4		13.4	YELLOW
IL 9	DIAGONAL	81+77.75	L.T.	13.4		13.4	YELLOW
IL 9	DIAGONAL	81+97.75	L.T.	13.4		13.4	YELLOW
IL 9	DIAGONAL	82+17.75	L.T.	13.4		13.4	YELLOW
IL 9	DIAGONAL	82+35.75	L.T.	13.4		13.4	YELLOW
IL 9	DIAGONAL	82+57.88	L.T.	13.4		13.4	YELLOW
IL 9	DIAGONAL	82+77.88	L.T.	13.4		13.4	YELLOW
IL 9	DIAGONAL	83+16.65	L.T.	3.5		3.5	YELLOW
IL 9	DIAGONAL	83+36.65	L.T.	3.5		3.5	YELLOW
IL 9	DIAGONAL	83+56.65	L.T.	3.5		3.5	YELLOW
IL 9	DIAGONAL	83+76.65	L.T.	3.5		3.5	YELLOW
IL 9	DIAGONAL	83+96.65	L.T.	3.3		3.3	YELLOW
IL 9	DIAGONAL	84+16.65	L.T.	3.1		3.1	YELLOW
IL 9	DIAGONAL	84+36.65	L.T.	2.8		2.8	YELLOW
IL 9	DIAGONAL	84+56.65	L.T.	3.7		3.7	YELLOW
IL 9	DIAGONAL	86+12.39	L.T.	11.1		11.1	YELLOW

78000600 THERMOPLASTIC PAVEMENT MARKING - LINE 12" (CONTINUED)
78009012 MODIFIED URETHANE PAVEMENT MARKING - LINE 12" (CONTINUED)
78011065 GROOVING FOR RECESSED PAVEMENT MARKING 13" (CONTINUED)

				THERMOPLASTIC PAVEMENT MARKING - LINE 12"	MODEFIED URETHANE PAVEMENT MARKING - LINE 12"	GROOVING FOR RECESSED PAVEMENT MARKING 13"	
				78000600	78009012	78011065	
LOCATION		STATION	OFFSET	QUANTITY (FT)	QUANTITY (FT)	QUANTITY (FT)	COLOR
IL 9	DIAGONAL	86+32.39	L.T.	10.3		10.3	YELLOW
IL 9	DIAGONAL	86+52.39	L.T.	9.4		9.4	YELLOW
IL 9	DIAGONAL	86+72.39	L.T.	8.6		8.6	YELLOW
IL 9	DIAGONAL	86+92.39	L.T.	7.8		7.8	YELLOW
IL 9	DIAGONAL	87+12.39	L.T.	6.9		6.9	YELLOW
IL 9	DIAGONAL	87+32.38	L.T.	6.1		6.1	YELLOW
IL 9	DIAGONAL	87+52.38	L.T.	5.3		5.3	YELLOW
IL 9	DIAGONAL	87+72.38	L.T.	4.4		4.4	YELLOW
IL 9	DIAGONAL	87+92.38	L.T.	3.6		3.6	YELLOW
IL 9	DIAGONAL	88+12.38	L.T.	2.8		2.8	YELLOW
IL 9	DIAGONAL	88+32.38	L.T.	2.0		2.0	YELLOW
IL 9	DIAGONAL	88+52.38	L.T.	1.1		1.1	YELLOW
IL 9	DIAGONAL	83+76.12	L.T.	10.6		10.6	WHITE
IL 9	DIAGONAL	83+91.78	L.T.	16.1		16.1	WHITE
IL 9	DIAGONAL	84+11.76	L.T.	16.0		16.0	WHITE
IL 9	DIAGONAL	88+63.23	L.T.	9.5		9.5	WHITE
IL 9	DIAGONAL	88+74.24	L.T.	8.1		8.1	WHITE
IL 9	DIAGONAL	88+85.26	L.T.	6.7		6.7	WHITE
IL 9	DIAGONAL	88+96.27	L.T.	5.2		5.2	WHITE
IL 9	DIAGONAL	89+7.28	L.T.	3.8		3.8	WHITE
IL 9	DIAGONAL	89+18.29	L.T.	2.4		2.4	WHITE
IL 9	DIAGONAL	89+29.31	L.T.	1.0		1.0	WHITE
HINSHAW AVE	CROSSWALK	90+93.55	R.T.		158.0	158.0	WHITE
IL 9	CROSSWALK	91+9.77	C.L.		139.3	139.3	WHITE
		TOTAL		964.0	382.0	1345.0	

78000100 THERMOPLASTIC PAVEMENT MARKING - LETTERS AND SYMBOLS
78011000 GROOVING FOR RECESSED PAVEMENT MARKINGS, LETTERS AND SYMBOLS

				THERMOPLASTIC PAVEMENT MARKING - LETTERS AND SYBMOLS	GROOVING FOR RECESSED PAVEMENT MARKINGS, LETTERS AND SYMBOLS	
				78000100	78011000	
LOCATION	STATION	SYMBOL	OFFSET	QUANTITY (SQ FT)	QUANTITY (SQ FT)	COLOR
MARTIN LUTHER KING DR	64+47.14	LEFT ARROW	L.T.	15.6	15.6	WHITE
MARTIN LUTHER KING DR	64+52.22	LEFT ARROW	L.T.	15.6	15.6	WHITE
MARTIN LUTHER KING DR	64+67.75	THROUGH ARROW	L.T.	11.5	11.5	WHITE
MARTIN LUTHER KING DR	64+66.95	THROUGH ARROW	L.T.	11.5	11.5	WHITE
MARTIN LUTHER KING DR	64+82.42	RIGHT ARROW	L.T.	15.6	15.6	WHITE
MARTIN LUTHER KING DR	64+81.52	RIGHT ARROW	L.T.	15.6	15.6	WHITE
IL 9	65+53.97	LEFT ARROW	R.T.	15.6	15.6	WHITE
IL 9	66+33.96	LEFT ARROW	R.T.	15.6	15.6	WHITE
IL 9	64+19.54	LEFT ARROW	L.T.	15.6	15.6	WHITE
IL 9	63+39.54	LEFT ARROW	L.T.	15.6	15.6	WHITE
IL 9	70+86.17	LEFT ARROW	L.T.	15.6	15.6	WHITE
IL 9	71+66.15	LEFT ARROW	L.T.	15.6	15.6	WHITE
CAROLINE ST	72+43.14	LEFT AND THROUGH ARROW	R.T.	26	26	WHITE
CAROLINE ST	72+73.18	RIGHT ARROW	R.T.	15.6	15.6	WHITE
CAROLINE ST	72+53.52	LEFT AND THROUGH ARROW	R.T.	26	26	WHITE
CAROLINE ST	72+66.11	RIGHT ARROW	R.T.	15.6	15.6	WHITE
IL 9	73+13.18	LEFT ARROW	R.T.	15.6	15.6	WHITE
IL 9	73+93.28	LEFT ARROW	R.T.	15.6	15.6	WHITE
IL 9	76+53.74	LEFT ARROW	L.T.	15.6	15.6	WHITE
IL 9	76+65.02	LEFT ARROW	R.T.	15.6	15.6	WHITE
BROWN ST	78+36.65	LEFT ARROW	R.T.	15.6	15.6	WHITE
BROWN ST	78+43.50	LEFT ARROW	R.T.	15.6	15.6	WHITE
BROWN ST	78+61.38	RIGHT ARROW	R.T.	15.6	15.6	WHITE
BROWN ST	78+59.67	RIGHT ARROW	R.T.	15.6	15.6	WHITE
IL 9	78+97.91	LEFT ARROW	R.T.	15.6	15.6	WHITE
IL 9	79+77.93	LEFT ARROW	R.T.	15.6	15.6	WHITE
IL 9	81+2.02	RAIL ROAD	R.T.	61.2	61.2	WHITE
IL 9	81+1.96	RAIL ROAD	R.T.	61.2	61.2	WHITE
WHITE OAK RD	83+10.84	RIGHT ARROW	L.T.	15.6	15.6	WHITE
WHITE OAK RD	83+23.43	RIGHT ARROW	L.T.	15.6	15.6	WHITE
IL 9	85+71.91	RAIL ROAD	L.T.	61.2	61.2	WHITE
IL 9	89+31.48	LEFT ARROW	R.T.	15.6	15.6	WHITE
IL 9	90+11.54	LEFT ARROW	R.T.	15.6	15.6	WHITE
IL 9	89+51.04	RIGHT AND THROUGH ARROW	R.T.	26	26	WHITE
IL 9	90+31.11	RIGHT AND THROUGH ARROW	R.T.	26	26	WHITE
HINSHAW AVE	0+91.51	LEFT ARROW	L.T.	15.6	15.6	WHITE
HINSHAW AVE	1+58.51	LEFT ARROW	L.T.	15.6	15.6	WHITE
			TOTAL	747.4	747.4	

78300200 PAVEMENT MARKING REMOVAL - WATER BLASTING

						PAVEMENT MARKING REMOVAL - WATER BLASTING
						78300202
LOCATION		OFFSET	STATION	TO	STATION	QUANTITY (SQFT)
LOCUST	YELLOW SKIP	L.T.	100+45.8		107+43.	58.1
LOCUST	YELLOW SKIP	L.T.	+.		+9.5	0.8
LOCUST	STOP BAR	L.T.	100+45.4			27.0
LOCUST	CROSSWALK	C.L.	100+38.			36.9
LOCUST	STOP BAR	C.L.	+66.5			43.6
LOCUST	CROSSWALK	C.L.	+75.			42.4
LOCUST	PARKING SPACE	L.T.	100+65.8		101+05.8	21.3
LOCUST	PARKING SPACE	R.T.	100+65.8		101+05.8	21.3
LOCUST	PARKING SPACE	L.T.	101+33.8		101+95.8	31.3
LOCUST	PARKING SPACE	R.T.	101+33.8		101+95.8	31.3
LOCUST	PARKING SPACE	L.T.	102+33.1		102+95.1	31.3
LOCUST	PARKING SPACE	R.T.	102+33.1		102+95.1	31.3
LOCUST	PARKING SPACE	L.T.	103+37.4		103+77.5	21.3
LOCUST	PARKING SPACE	R.T.	103+37.4		103+77.5	21.3
LOCUST	PARKING SPACE	L.T.	104+11.8		104+51.7	21.3
LOCUST	PARKING SPACE	R.T.	104+11.8		104+51.7	21.3
LOCUST	PARKING SPACE	L.T.	104+80.6		105+42.6	31.3
LOCUST	PARKING SPACE	R.T.	104+80.6		105+42.6	31.3
LOCUST	PARKING SPACE	L.T.	105+85.3		106+05.2	12.0
LOCUST	PARKING SPACE	R.T.	105+85.3		106+05.2	12.0
LOCUST	PARKING SPACE	L.T.	106+36.		106+56.	12.0
LOCUST	PARKING SPACE	R.T.	106+36.		106+56.	12.0
LOCUST	PARKING SPACE	L.T.	106+85.8		107+05.9	12.0
LOCUST	PARKING SPACE	R.T.	106+85.8		107+05.9	12.0
LOCUST	PARKING SPACE	L.T.	107+41.6		+81.5	21.3
LOCUST	PARKING SPACE	R.T.	107+41.6		+81.5	21.3
IL 9	TEMP PVMT MRKING					12082.8
Martin Luther Kind Drive	TEMP PVMT MRKING					1059.3
Caroline Street	TEMP PVMT MRKING					679.5
Brown Street	TEMP PVMT MRKING					699.5
White Oak Road	TEMP PVMT MRKING					201.8
STILLWELL ST	TEMP PVMT MRKING					111.8
HOLTON ST	TEMP PVMT MRKING					48.4
N Hinshaw Ave	TEMP PVMT MRKING					993.5
Locust Street	TEMP PVMT MRKING					1027.4
					TOTAL	17544.0

MODEL: Default
FILE NAME: pw:\\kcspw.bentley.com:kcspw-01\Documents\IDOT Projects\17-1137.00 ORD\6 IDCT\CAD Sheets\D570835pmlk-sgn-sheet005.dgn

Kaskaskia Engineering Group, LLC
Professional Registration Illinois Professional Design Firm Professional Engineering Group
208 E. Main St., Suite 300 Mascoutah, Illinois 62258 618.233.5577 phone 618.233.5577 fax www.kaskaskiaeng.com
184.006826 Illinois 281.004775 Missouri 20 2980066

USER NAME = msecrest	DESIGNED - MMS	REVISED -	
	DRAWN - MMS	REVISED -	
PLOT SCALE = 40.000 ' / in.	CHECKED - EJL	REVISED -	
PLOT DATE = 10/11/2023	DATE - 10-02-2023	REVISED -	

STATE OF ILLINOIS
DEPARTMENT OF TRANSPORTATION

FAP 693 (IL RTE 9)
SCHEDULES OF QUANTITIES

SCALE: _____ | SHEET 12 OF 13 SHEETS | STA. | TO STA.

F.A.P. RTE.	SECTION	COUNTY	TOTAL SHEETS	SHEET NO.
693	(129,109)RS3(16,4,1)	MCLEAN	218	35
		CONTRACT NO. 70855		
	ILLINOIS FED. AID PROJECT			

78100100 RAISED REFLECTIVE PAVEMENT MARKER
78300200 RAISED REFLECTIVE PAVEMENT MARKER REMOVAL

						TWO WAY AMBER	ONE WAY CRYSTAL	RPM REMOVAL
						78100100	78100100	78100200
LOCATION		OFFSET	STATION	TO	STATION	QUANTITY (EA)	QUANTITY(EA)	QUANTITY (EA)
IL 9	MEDIAN	C.L.	62+75.6		64+34.7	4		4
IL 9	MEDINA	C.L.	62+75.6		64+34.7	4		4
IL 9	LANE LINE	L.T.	62+75.6		64+34.7		2	2
IL 9	LEFT TURN LANE	R.T.	62+75.6		64+34.7		4	4
IL 9	LANELINE	R.T.	62+75.6		64+34.7		2	2
IL 9	MEDIAN	C.L.	65+38.8		66+00.	2		2
IL 9	MEDIAN	C.L.	65+38.8		66+00.	2		2
IL 9	LANE LINE	L.T.	65+38.8		66+00.		1	1
IL 9	LEFT TURN LANE	L.T.	65+38.8		66+00.		2	2
IL 9	LANE LINE	R.T.	65+38.8		66+00.		1	1
IL 9	MEDIAN	C.L.	66+00.		71+00.		13	13
IL 9	MEDIAN	C.L.	66+00.		71+00.		13	13
IL 9	LANE LINE	L.T.	66+00.		71+00.		7	7
IL 9	LEFT TURN LANE	L.T.	66+00.		66+60.8		2	2
IL 9	LANE LINE	R.T.	66+00.		71+00.		7	7
IL 9	LEFT TURN LANE	R.T.	70+64.5		71+00.		1	1
IL 9	MEDIAN	L.T.	71+00.		71+83.5	3		3
IL 9	MEDIAN	L.T.	71+00.		71+83.5	3		3
IL 9	LANE LINE	L.T.	71+00.		71+83.5		2	2
IL 9	LEFT TURN LANE	R.T.	71+00.		71+83.5		3	3
IL 9	LANE LINE	R.T.	71+00.		71+70.		1	1
IL 9	MEDIAN	C.L.	72+97.8		74+14.8	3		3
IL 9	MEDIAN	C.L.	74+14.8		75+71.2		4	4
IL 9	MEDIAN	C.L.	75+71.2		77+00.	4		4
IL 9	MEDIAN	C.L.	72+97.8		74+14.8	3		3
IL 9	MEDIAN	C.L.	74+14.8		75+71.3		4	4
IL 9	MEDIAN	C.L.	75+71.3		77+00.	4		4
IL 9	LANE LINE	L.T.	72+91.6		77+00.		6	6
IL 9	LEFT TURN LANE	L.T.	72+95.6		74+14.8		3	3
IL 9	LANE LINE	R.T.	72+97.8		77+00.		6	6
IL 9	MEDIAN	C.L.	77+00.		77+41.2		2	2
IL 9	MEDIAN	C.L.	77+41.2		77+78.4	1		1
IL 9	MEDIAN	C.L.	77+00.		77+41.2		1	1
IL 9	MEDIAN	C.L.	77+00.		77+74.8	2		2
IL 9	LANE LINE	L.T.	77+00.		77+78.4		1	1
IL 9	LANE LINE	R.T.	77+00.		77+74.8		1	1
IL 9	MEDIAN	C.L.	78+82.8		79+99.8	3		3
IL 9	MEDIAN	C.L.	79+99.8		82+00.		6	6
IL 9	MEDIAN	C.L.	78+82.8		79+99.8	3		3
IL 9	MEDIAN	C.L.	79+99.8		81+44.5		4	4
IL 9	LANE LINE		78+84.8		82+00.		4	4
IL 9	LEFT TURN LANE		78+84.8		79+99.8		3	3
IL 9	LANE LINE		78+84.8		82+00.		4	4
IL 9	MEDIAN	L.T.	82+00.		82+88.1		3	3
IL 9	LANE LINE	L.T.	82+00.		82+88.1		2	2
IL 9	LANE LINE	R.T.	82+00.		82+88.1		2	2
IL 9	MEDIAN	L.T.	83+08.1		84+66.7		4	4
IL 9	MEDIAN	C.L.	84+66.7		86+12.1	4		4
IL 9	MEDIAN	C.L.	84+66.7		86+20.7	4		4
IL 9	MEDIAN	C.L.	86+12.1		88+00.		5	5
IL 9	MEDIAN	C.L.	86+20.7		88+00.		5	5
IL 9	LANE LINE	R.T.	83+77.4		87+49.5		5	5
IL 9	MEDIAN	L.T.	88+00.		88+84.6		2	2
IL 9	MEDIAN	L.T.	88+84.6		90+24.6	4		4
IL 9	MEDIAN	L.T.	88+00.		88+84.6		2	2
IL 9	MEDIAN	L.T.	88+84.6		90+24.6	4		4
IL 9	LEFT TURN LANE	R.T.	88+84.7		90+24.6		2	2
IL 9	MEDIAN	R.T.	91+25.		91+41.7	1		1
HINSHAW	MEDIAN	L.T.	+77.4		1+00.	1		1
HINSHAW	MEDIAN	L.T.	1+00.		2+47.4	4		4
HINSHAW	MEDIAN	L.T.	1+00.		2+47.4	4		4
					TOTALS	209		209

72000100 SIGN PANEL - TYPE 1
72400500 RELOCATE SIGN PANEL ASSEMPLY - TYPE A

STATION	OFFSET	TYPE	DESCRIPTION	DIMENSTIONS	RELOCATE SIGN PANEL ASSEMPLY - TYPE A	SIGN PANEL - TYPE 1	METAL POST - TYPE A	COMMENT
				(FEET)	(EACH)	(EACH)	(FEET)	
IL-9								
87+24	27.24 RT		CROSSWALK AHEAD		1		15	REMOVE AND RELOCATE
90+15	24.21 RT		CROSSWALK AHEAD		1		15	REMOVE AND RELOCATE
90+46	31.37 RT		WEST		1		18	REMOVE AND RELOCATE
90+46	31.37 RT		150		1			REMOVE AND RELOCATE
90+46	31.37 RT		ILLINOIS 9		1			REMOVE AND RELOCATE
90+46	31.37 RT		RIGHT ARROW		1			REMOVE AND RELOCATE
ON SIGNAL MAST ARM AT BROWN ST			BEGIN CLASS II TRUCK ROUTE		1			REMOVE AND RELOCATE
TOTAL					7		48	

70300221 TEMPORARY PAVEMENT MARKING - LINE 4" - PAINT
70300241 TEMPORARY PAVEMENT MARKING - LINE 6" - PAINT
70300261 TEMPORARY PAVEMENT MARKING - LINE 12" - PAINT
70300281 TEMPORARY PAVEMENT MARKING - LINE 24" - PAINT

LOCATION	TEMPORARY PAVEMENT MARKING - LETTERS AND SYMBOLS - PAINT	TEMPORARY PAVEMENT MARKING - LINE 4" - PAINT	TEMPORARY PAVEMENT MARKING - LINE 6" - PAINT	TEMPORARY PAVEMENT MARKING - LINE 12" - PAINT	TEMPORARY PAVEMENT MARKING - LINE 24" - PAINT
	70300211	70300221	70300241	70300261	70300281
	SQ FT	FOOT	FOOT	FOOT	FOOT
IL 9	454	9492	1038	1165	388
Martin Luther King Drive	85.4	779	197	42	42
Caroline Street	83.2	122	435	83	40
Brown Street	62.4	350	298	27	24
White Oak Road	31.2	187			15
Stillwell Street			98		14
Holton Street			48		
N Hinshaw Ave	31.2	538	233	158	64
Locust Street		833	159		36
TOTAL	747.4	12301	2506	1475	623

70306120 TEMPORARY PAVEMENT MARKING - LINE 4" - TYPE III TAPE
70300150 SHORT TERM PAVEMENT MARKING REMOVAL

STATION	TO	STATION	TEMPORARY PAVEMENT MARKING - LINE 4" - TYPE III TAPE			SHORT TERM PAVEMENT MARKING REMOVAL
			70306120			
			BRIDGE			
			SOLID	SOLID	SOLID	
			YELLOW	WHITE	WHITE	SQ FT
			EDGE LINE	EDGE LINE	SKIP DASH	70300150
STAGE 1						
W MARKET ST						
63+73.0	TO	72+15.9	200			66.7
STAGE 2						
W MARKET ST						
60+68.0	TO	70+20.9	436	100	30	188.7
STAGE 3						
W MARKET ST						
66+41.6	TO	77+07.0	436	100	30	188.7
TOTAL			1332			444

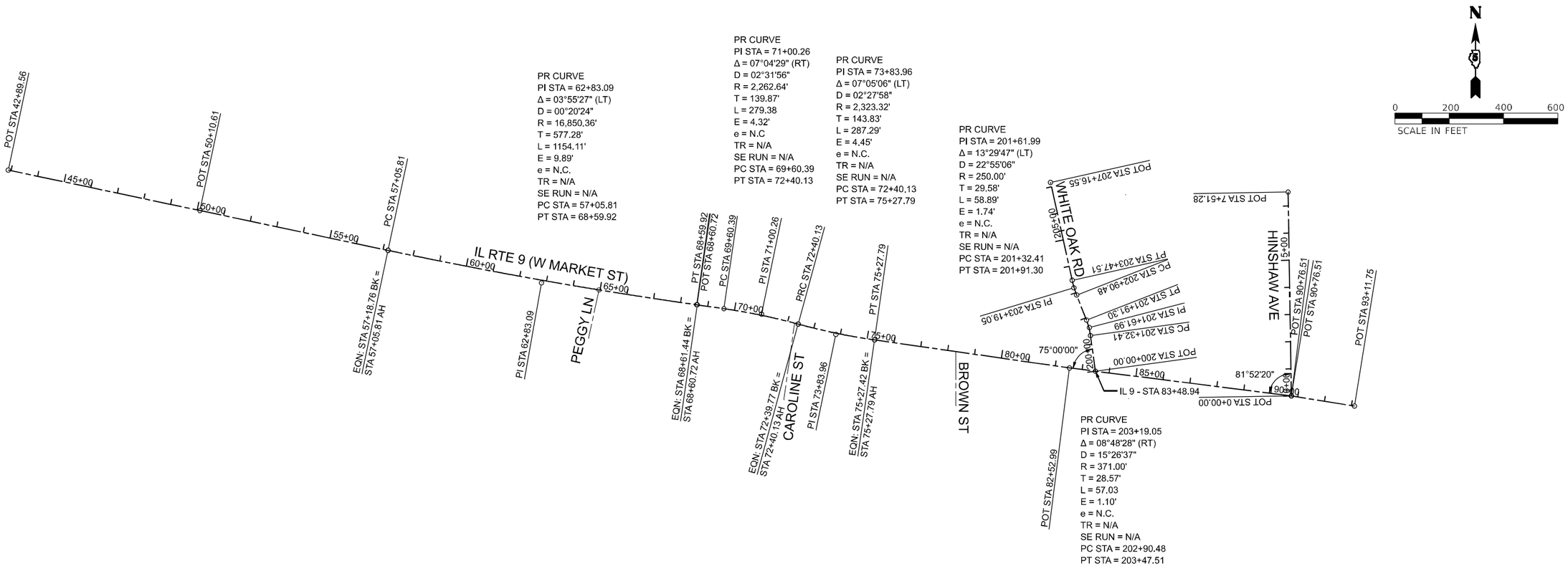

BENCHMARKS:

5016-01 TO REACH FROM THE INTERSECTION OF MARKET ST. (IL 9) AND MARTIN LUTHER KING JR DRIVE, GO EAST ALONG MARKET ST. FOR APPROX. 350' TO THE MARK ON THE RIGHT. SAID MARK IS A CHISELED SQUARE ON THE SE WINGWALL OF STRCT# 190.
ELEV=745.14'

5016-02 AT THE INTERSECTION OF MARKET ST (IL 9). MARK IS A CHISELED SQUARE ON THE NE CORNER OF RAILROAD FLASHING SIGNAL FOUNDATION IN THE SW QUAD OF INTERSECTION.
ELEV=760.975'

5016-03 AT THE INTERSECTION OF MARKET ST (IL 9) AND HINSHAW AVE. MARK IS A CHISELED SQUARE ON THE NORTH EDGE OF A TRAFFIC SIGNAL FOUNDATION IN THE NW QUAD OF INTERSECTION.
ELEV=776.211'

PT NUMBER	NORTHING	EASTING	STATION	OFFSET	CODE	DESCRIPTION	AFTER CONST
1	1390828.471	793413.654	68+61.44	0.00	835	PT	TYPE II Special
10	1390492.799	795601.659	90+76.51	0.00	803	INTERSECTION	TYPE II Special
11	1390909.442	792840.548	62+82.87	9.89	820	PI	TYPE II Special
15	1391175.953	791583.046	50+10.61	0.00	820	PI KINK	TYPE II Special
23	1391029.131	792275.808	57+18.76	0.00	832	STATION EQUATION	TYPE II Special
26	1390699.209	794066.811	75+27.42	0.00	832	STATION EQUATION	TYPE II Special
61	1390596.047	794784.640	82+52.99	0.00	820	PI KINK	TYPE II Special
83	1390719.669	793924.444	73+83.78	4.45	820	PI	TYPE II Special
84	1390757.533	793785.687	72+39.77	0.00	832	STATION EQUATION	TYPE II Special
85	1390794.354	793650.751	71+00.08	-4.32	820	PI	TYPE II Special

NOTE: ALL ALIGNMENTS SHOWN ARE PROPOSED CENTERLINES

MODEL: ATB-Sheet
FILE NAME: V:\4216 - IL 9 Bloomington\CADD\CADD Sheets\D570855-sht-ATB.dgn

Hutchison Engineering, Inc.

USER NAME = BDeCraene	DESIGNED -	REVISED -
	DRAWN -	REVISED -
PLOT SCALE = 0.16666633 ' / in.	CHECKED -	REVISED -
PLOT DATE = 10/17/2023	DATE -	REVISED -

STATE OF ILLINOIS
DEPARTMENT OF TRANSPORTATION

FAP 693 (IL RTE 9)
ALIGNMENT, TIES AND BENCHMARKS

SCALE: 1"=200' | SHEET 1 OF 1 SHEETS | STA. 200+00 | TO STA. 207+16.55

F.A.P. RTE.	SECTION	COUNTY	TOTAL SHEETS	SHEET NO.
693	(129)RS-4	McLEAN	218	37
		CONTRACT NO. 70855		
	ILLINOIS	FED. AID PROJECT		

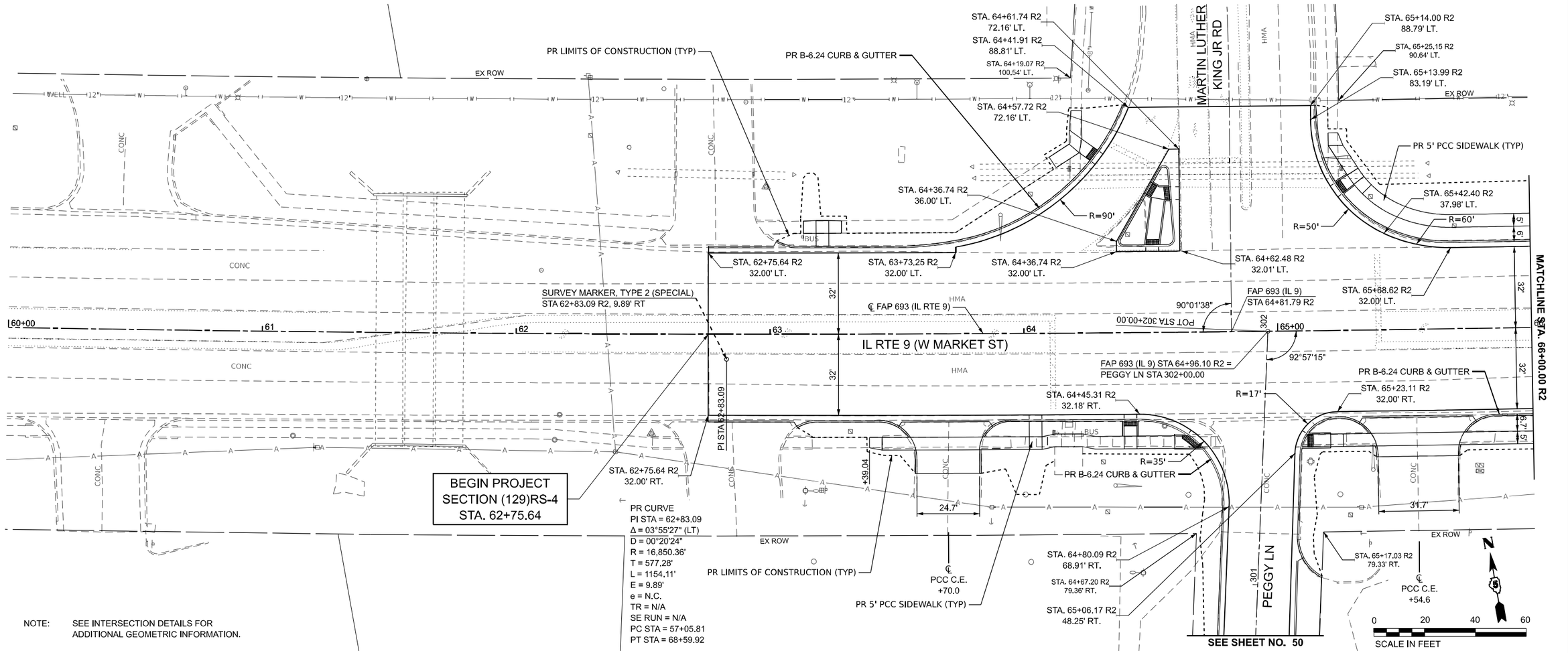

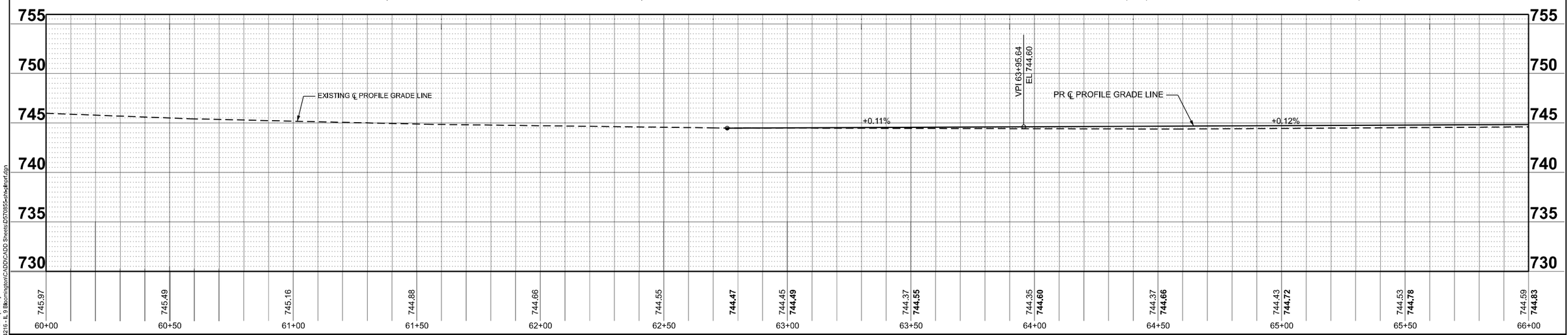

MODEL: IL_0_1 - Plan 1 [Sheet]
FILE NAME: V:\4216 - IL 9 Bloomington\CADD\CADD Sheets\D570855-sht-plansurf.dgn

Hutchison Engineering, Inc.	USER NAME = BDeCraene	DESIGNED -	REVISED -
		DRAWN -	REVISED -
	PLOT SCALE = 0.16666633 ' / In.	CHECKED -	REVISED -
	PLOT DATE = 10/17/2023	DATE -	REVISED -

STATE OF ILLINOIS
DEPARTMENT OF TRANSPORTATION

FAP 693 (IL RTE 9)
W MARKET ST PLAN AND PROFILE

SCALE: H=20 V=5 | SHEET 1 OF 18 SHEETS | STA. 60+00 R2 TO STA. 66+00 R2

F.A.P. RTE.	SECTION	COUNTY	TOTAL SHEETS	SHEET NO.
693	(129)RS-4	McLEAN	218	38
		CONTRACT NO. 70855		
	ILLINOIS	FED. AID PROJECT		

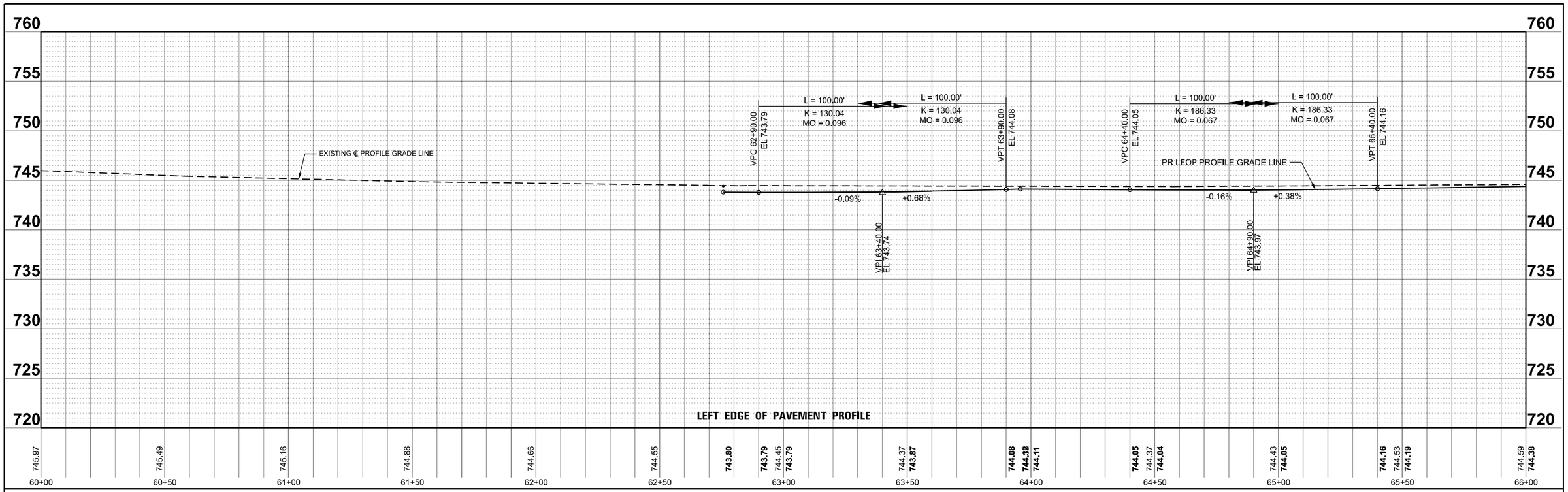

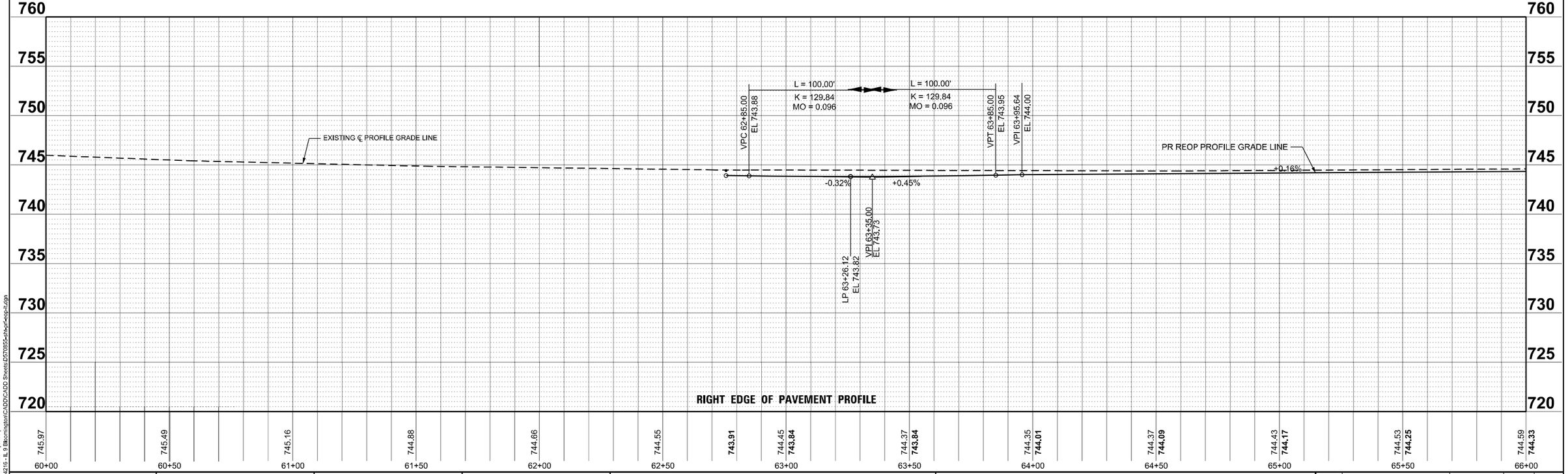

MODEL: IL_9_1 - Profile 1 [Sheet]
FILE NAME: V:\d216 - IL 9 Bloomington\CADD\CADD Sheets\D70855-sht-prf-loop-rt.dgn

Hutchison Engineering, Inc.

USER NAME = BDeCraene	DESIGNED -	REVISED -
	DRAWN -	REVISED -
PLOT SCALE = 0.16666633 ' / in.	CHECKED -	REVISED -
PLOT DATE = 10/17/2023	DATE -	REVISED -

STATE OF ILLINOIS
DEPARTMENT OF TRANSPORTATION

FAP 693 (IL RTE 9)
W MARKET ST EDGE OF PAVEMENT PROFILE

SCALE: H=20 V=5 | SHEET 2 OF 18 SHEETS | STA. 60+00 R2 | TO STA. 66+00 R2

F.A.P. RTE.	SECTION	COUNTY	TOTAL SHEETS	SHEET NO.
693	(129)RS-4	McLEAN	218	39
		CONTRACT NO. 70855		
	ILLINOIS FED. AID PROJECT			

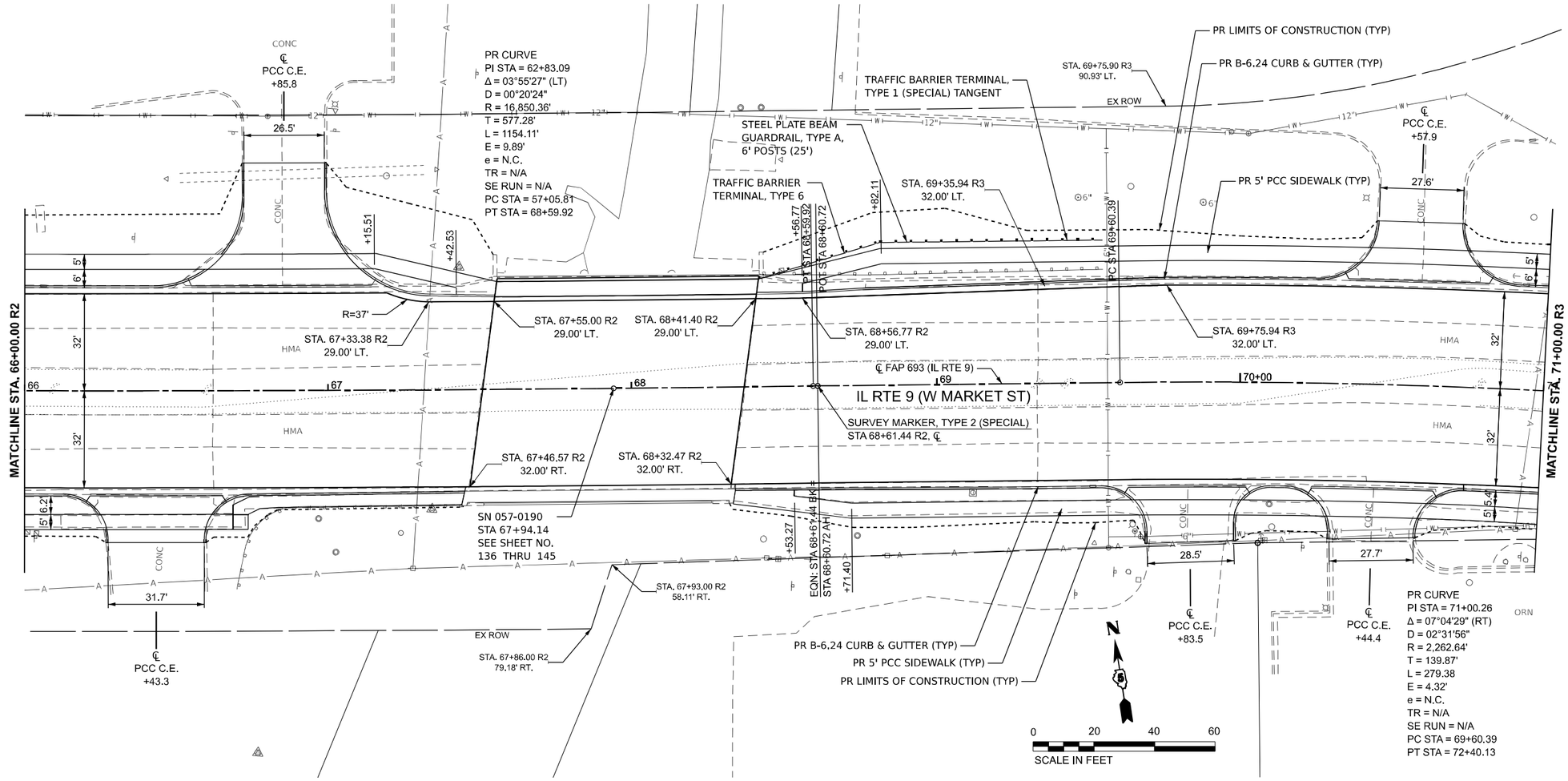

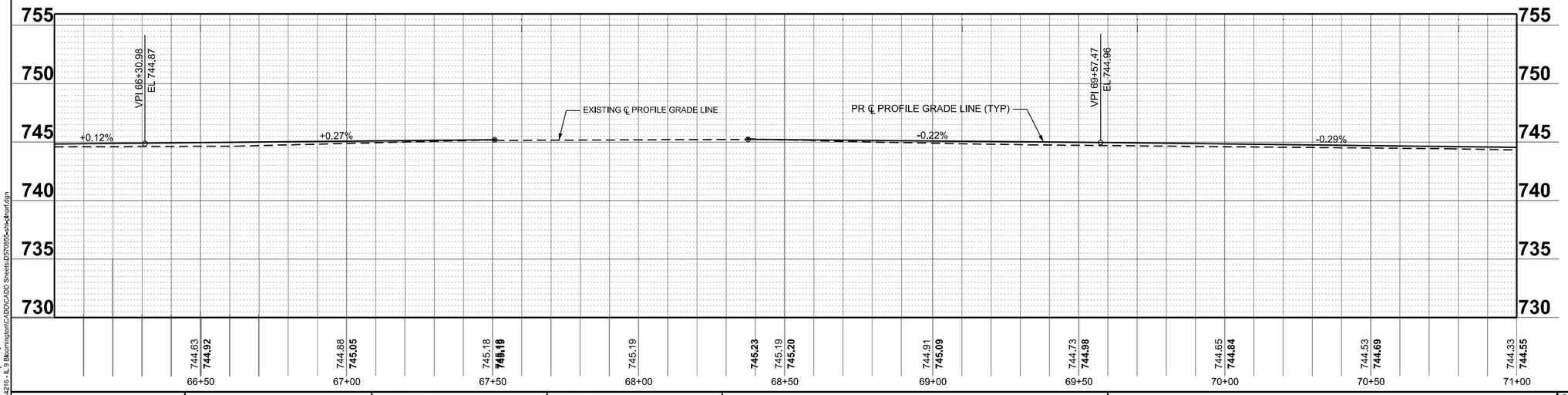

MODEL: IL_9_1 - Plan 2 [Sheet]
FILE NAME: V:\d216 - IL 9 Bloomington\CADD\CADD Sheets\D570855-sht-prof.dgn

USER NAME = BDeCraene	DESIGNED -	REVISED -	
	DRAWN -	REVISED -	
PLOT SCALE = 0.16666633 ' / in.	CHECKED -	REVISED -	
PLOT DATE = 10/17/2023	DATE -	REVISED -	

Hutchison Engineering, Inc.

STATE OF ILLINOIS
DEPARTMENT OF TRANSPORTATION

FAP 693 (IL RTE 9)
W MARKET ST PLAN AND PROFILE

SCALE: H=20 V=5 | SHEET 3 OF 18 SHEETS | STA. 66+00 R2 TO STA. 71+00 R3

F.A.P. RTE.	SECTION	COUNTY	TOTAL SHEETS	SHEET NO.
693	(129)RS-4	McLEAN	218	40
		CONTRACT NO. 70855		
	ILLINOIS FED. AID PROJECT			

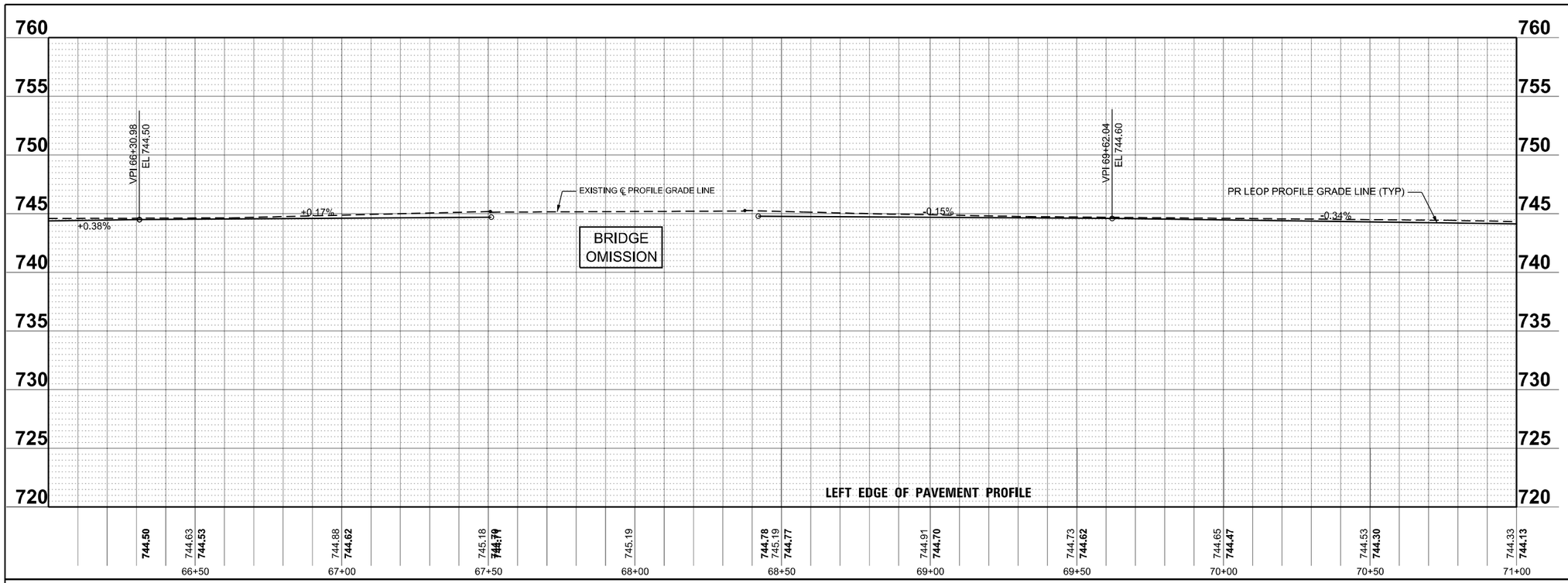

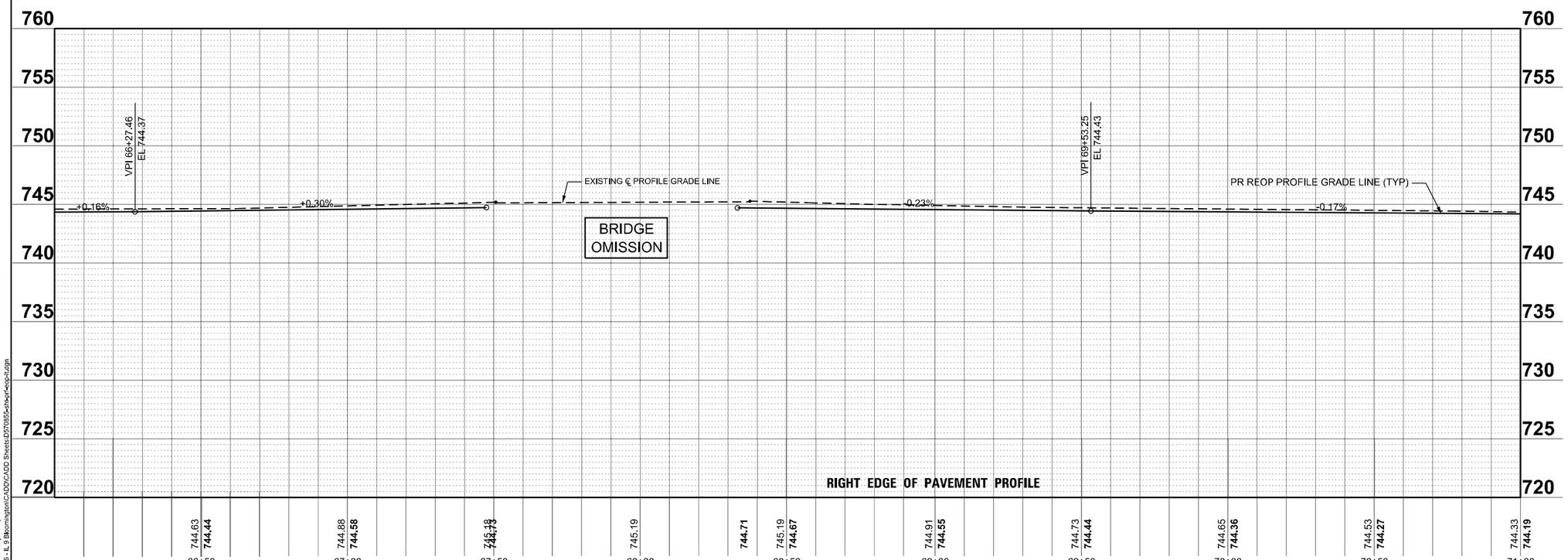

MODEL: IL_9_1 - Profile 2 [Sheet]
FILE NAME: V:\d216 - IL 9 Bloomington\CADD\CADD Sheets\D570855-sht-prf-leop-rt.dgn

Hutchison Engineering, Inc.

USER NAME = BDeCraene	DESIGNED -	REVISED -
	DRAWN -	REVISED -
PLOT SCALE = 0.16666633 ' / in.	CHECKED -	REVISED -
PLOT DATE = 10/17/2023	DATE -	REVISED -

STATE OF ILLINOIS
DEPARTMENT OF TRANSPORTATION

FAP 693 (IL RTE 9)
W MARKET ST EDGE OF PAVEMENT PROFILE

SCALE: H=20 V=5 | SHEET 4 OF 18 SHEETS | STA. 60+00 R2 | TO STA. 66+00 R2

F.A.P. RTE.	SECTION	COUNTY	TOTAL SHEETS	SHEET NO.
693	(129)RS-4	McLEAN	218	41
		CONTRACT NO. 70855		
	ILLINOIS FED. AID PROJECT			

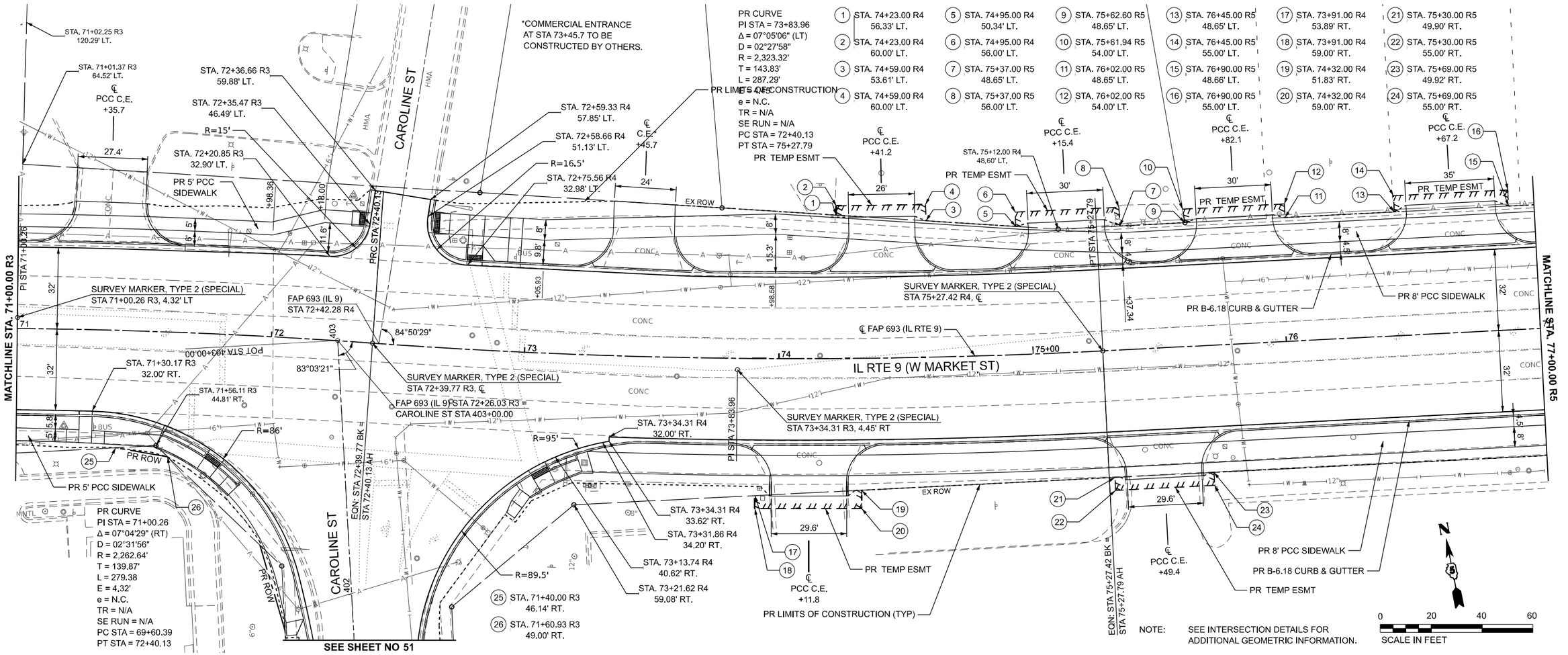

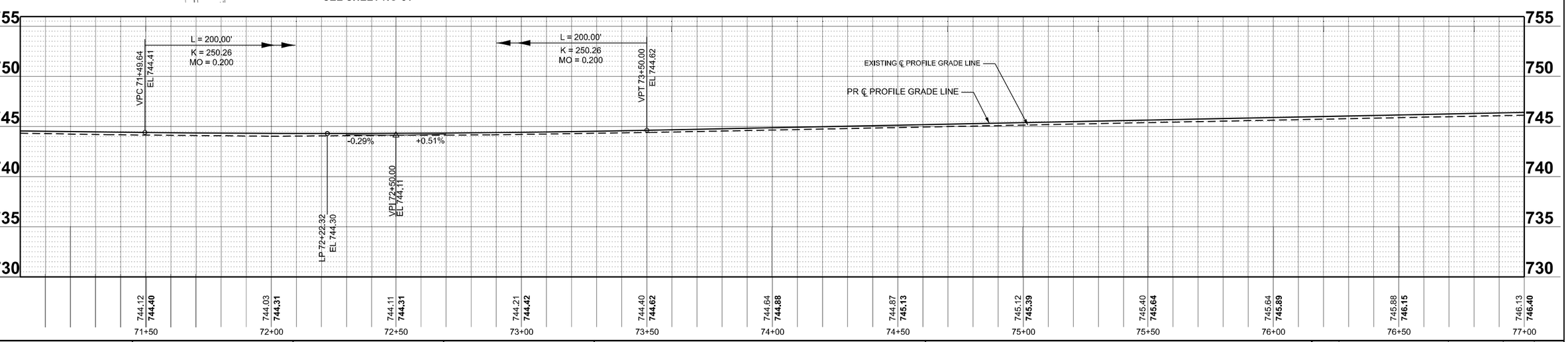

MODEL: IL_9_1 • Plan 3 [Sheet]
FILE NAME: V:\4216 - IL 9 Bloomington\CADD\CADD Sheets\D570855-sht-plan-prof.dgn

USER NAME = BDeCraene	DESIGNED -	REVISED -	STATE OF ILLINOIS DEPARTMENT OF TRANSPORTATION
	DRAWN -	REVISED -	
PLOT SCALE = 0.16666633 ' / in.	CHECKED -	REVISED -	
PLOT DATE = 10/17/2023	DATE -	REVISED -	

Hutchison Engineering, Inc.

FAP 693 (IL RTE 9)
W MARKET ST PLAN AND PROFILE

SCALE: H=20 V=5 | SHEET 5 OF 18 SHEETS | STA. 71+00 R3 TO STA. 77+00 R5

F.A.P. RTE.	SECTION	COUNTY	TOTAL SHEETS	SHEET NO.
693	(129)RS-4	McLEAN	218	42
		CONTRACT NO. 70855		
		ILLINOIS	FED. AID PROJECT	

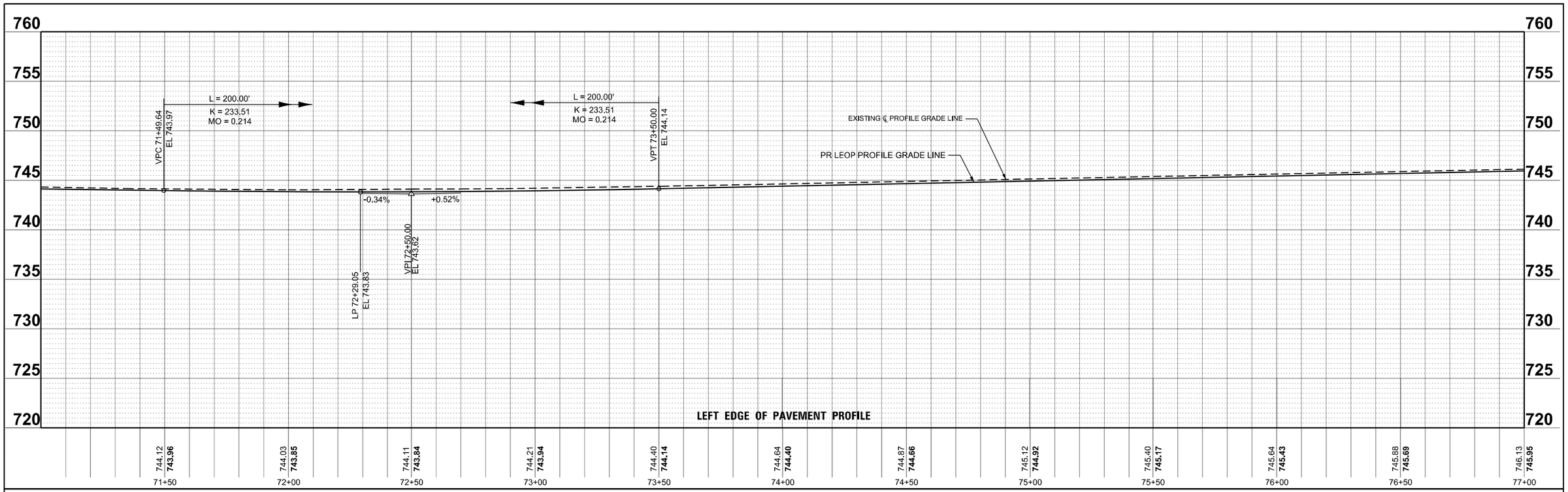

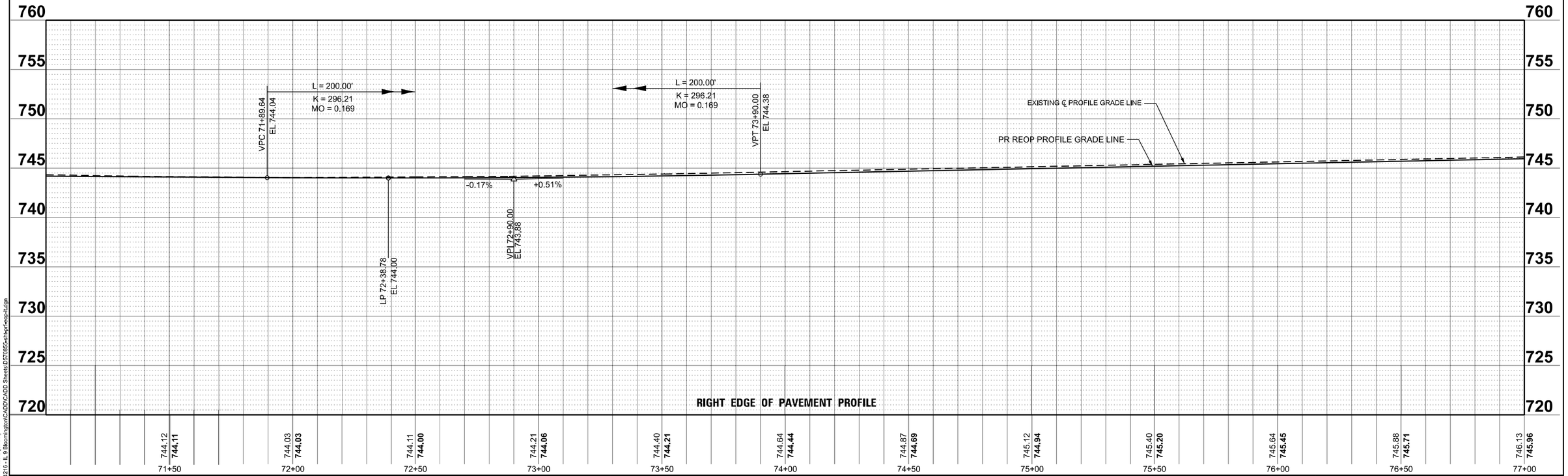

MODEL: IL_9_1 - Profile 3 [Sheet]
FILE NAME: V:\d216 - IL 9 Bloomington\CADD\CADD Sheets\D570855-sht-prf-reop-rt.dgn

Hutchison Engineering, Inc.

USER NAME = BDeCraene	DESIGNED -	REVISED -
	DRAWN -	REVISED -
PLOT SCALE = 0.16666633 ' / in.	CHECKED -	REVISED -
PLOT DATE = 10/17/2023	DATE -	REVISED -

STATE OF ILLINOIS
DEPARTMENT OF TRANSPORTATION

FAP 693 (IL RTE 9)
W MARKET ST EDGE OF PAVEMENT PROFILE

SCALE: H=20 V=5 | SHEET 6 OF 18 SHEETS | STA. 60+00 R2 | TO STA. 66+00 R2

F.A.P. RTE.	SECTION	COUNTY	TOTAL SHEETS	SHEET NO.
693	(129)RS-4	McLEAN	218	43
		CONTRACT NO. 70855		
	ILLINOIS FED. AID PROJECT			

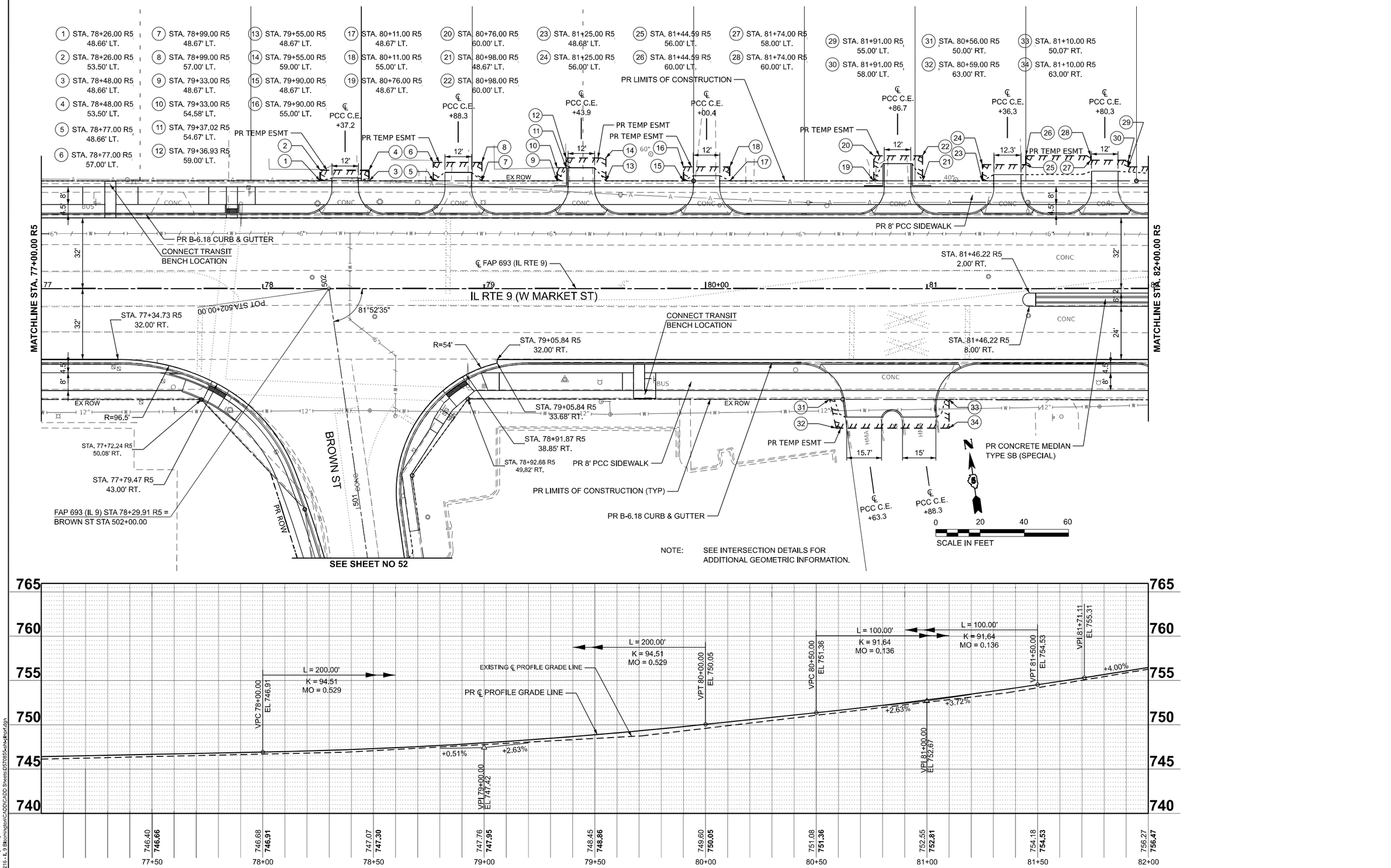

MODEL: IL_9_1 - Plan 4 [Sheet]
FILE NAME: V:\4216 - IL 9 Bloomington\CADD\CADD Sheets\D570855-sht-plnprf.dgn

Hutchison Engineering, Inc.

USER NAME = BDeCraene	DESIGNED -	REVISED -	
	DRAWN -	REVISED -	
PLOT SCALE = 0.16666633 ' / in.	CHECKED -	REVISED -	
PLOT DATE = 10/17/2023	DATE -	REVISED -	

STATE OF ILLINOIS
DEPARTMENT OF TRANSPORTATION

FAP 693 (IL RTE 9)
W MARKET ST PLAN AND PROFILE

SCALE: H=20 V=5 | SHEET 7 OF 18 SHEETS | STA. 77+00 R5 TO STA. 82+00 R5

F.A.P. RTE.	SECTION	COUNTY	TOTAL SHEETS	SHEET NO.
693	(129)RS-4	McLEAN	218	44

CONTRACT NO. 70855

ILLINOIS | FED. AID PROJECT

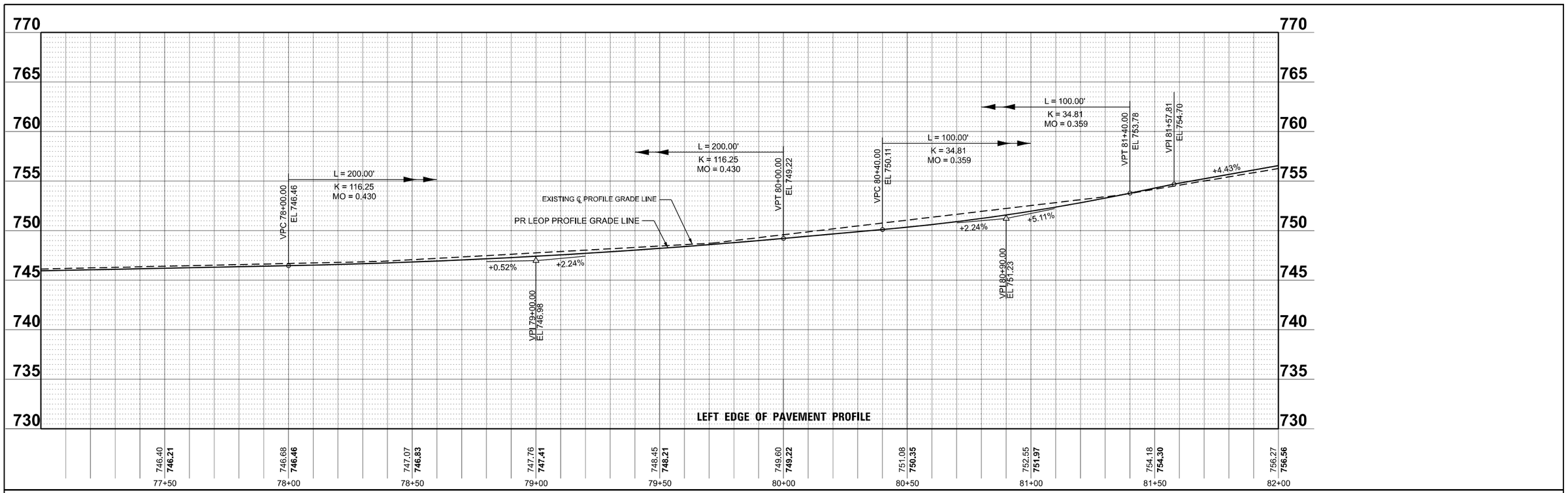

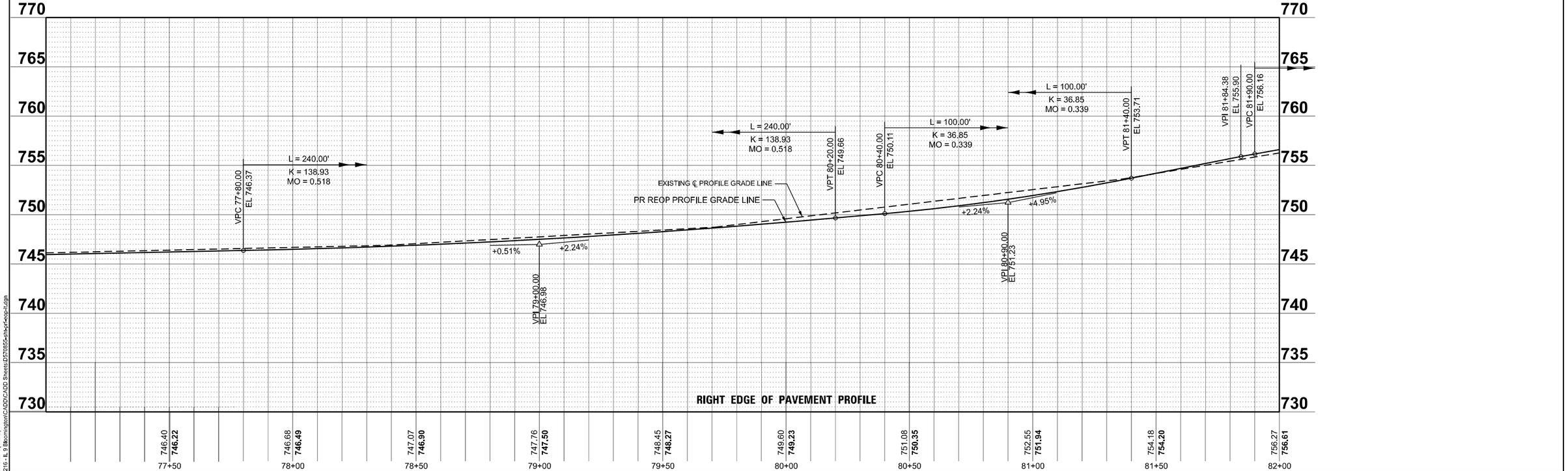

MODEL: IL_9_1 - Profile 4 [Sheet]
FILE NAME: V:\d216 - IL 9 Bloomington\CADD\CADD Sheets\D570855-sht-prf-loop-rt.dgn

Hutchison Engineering, Inc.

USER NAME = BDeCraene	DESIGNED -	REVISED -
	DRAWN -	REVISED -
PLOT SCALE = 0.16666633 ' / in.	CHECKED -	REVISED -
PLOT DATE = 10/17/2023	DATE -	REVISED -

STATE OF ILLINOIS
DEPARTMENT OF TRANSPORTATION

FAP 693 (IL RTE 9)
W MARKET ST EDGE OF PAVEMENT PROFILE

SCALE: H=20 V=5 | SHEET 8 OF 18 SHEETS | STA. 60+00 R2 | TO STA. 66+00 R2

F.A.P. RTE.	SECTION	COUNTY	TOTAL SHEETS	SHEET NO.
693	(129)RS-4	McLEAN	218	45
		CONTRACT NO. 70855		
	ILLINOIS FED. AID PROJECT			

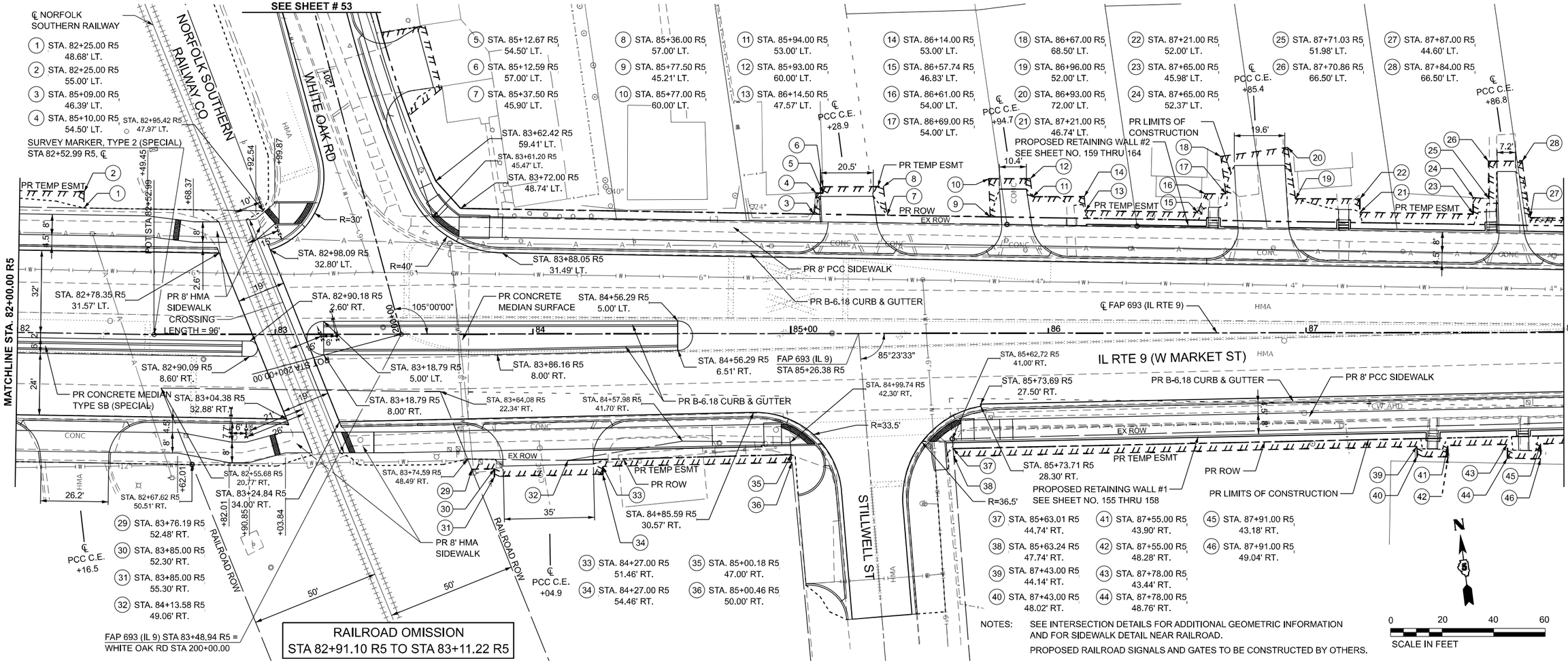

NOTES:
SEE INTERSECTION DETAILS FOR ADDITIONAL GEOMETRIC INFORMATION AND FOR SIDEWALK DETAIL NEAR RAILROAD.
PROPOSED RAILROAD SIGNALS AND GATES TO BE CONSTRUCTED BY OTHERS.

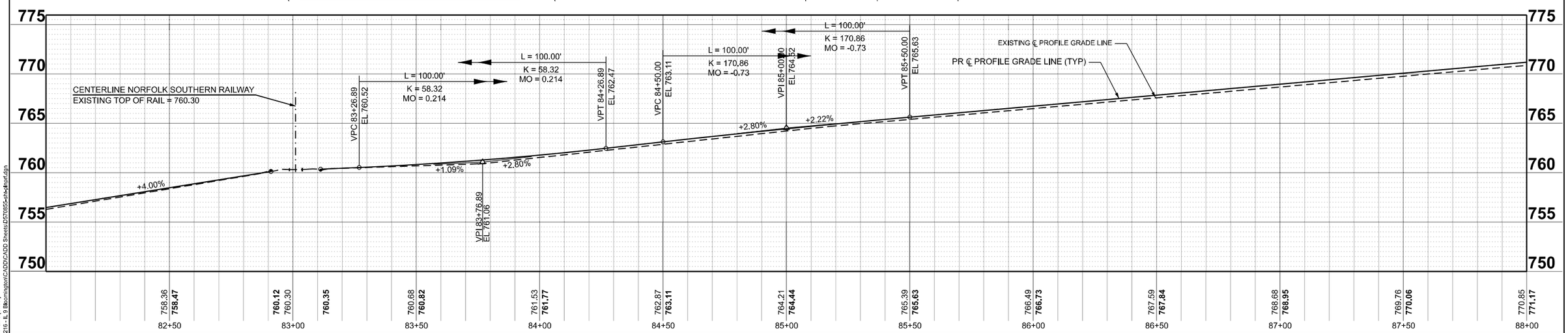

MODEL: IL_9_1 - Plan 5 [Sheet]
FILE NAME: V:\4216 - IL 9 Bloomington\CADD\CADD Sheets\D57085sthet-hort.dgn

Hutchison Engineering, Inc.	USER NAME = BDeCraene	DESIGNED -	REVISED - 11/16/2023	STATE OF ILLINOIS DEPARTMENT OF TRANSPORTATION	FAP 693 (IL RTE 9) W MARKET ST PLAN AND PROFILE
		DRAWN -	REVISED - 12/06/2023		
	PLOT SCALE = 0.16666633 ' / In.	CHECKED -	REVISED -		SCALE: H=20 V=5 | SHEET 9 OF 18 SHEETS | STA. 82+00 R5 TO STA. 88+00 R5
	PLOT DATE = 12/6/2023	DATE -	REVISED -		

F.A.P. RTE.	SECTION	COUNTY	TOTAL SHEETS	SHEET NO.
693	(129)RS-4	McLEAN	218	46
		CONTRACT NO. 70855		
	ILLINOIS FED. AID PROJECT			

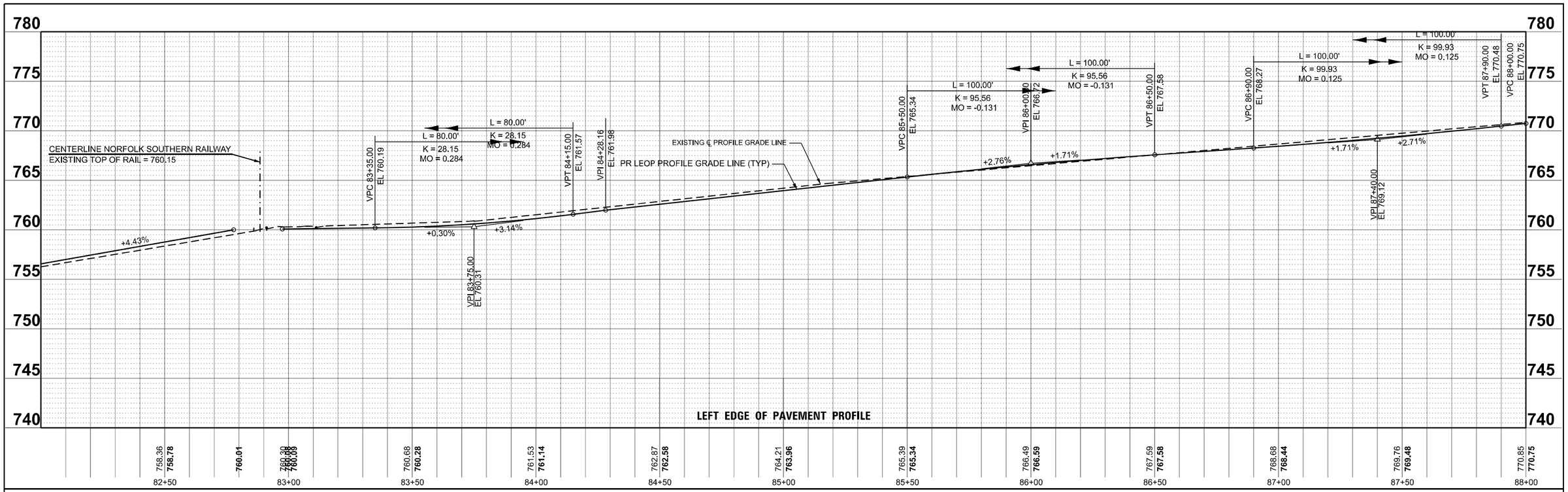

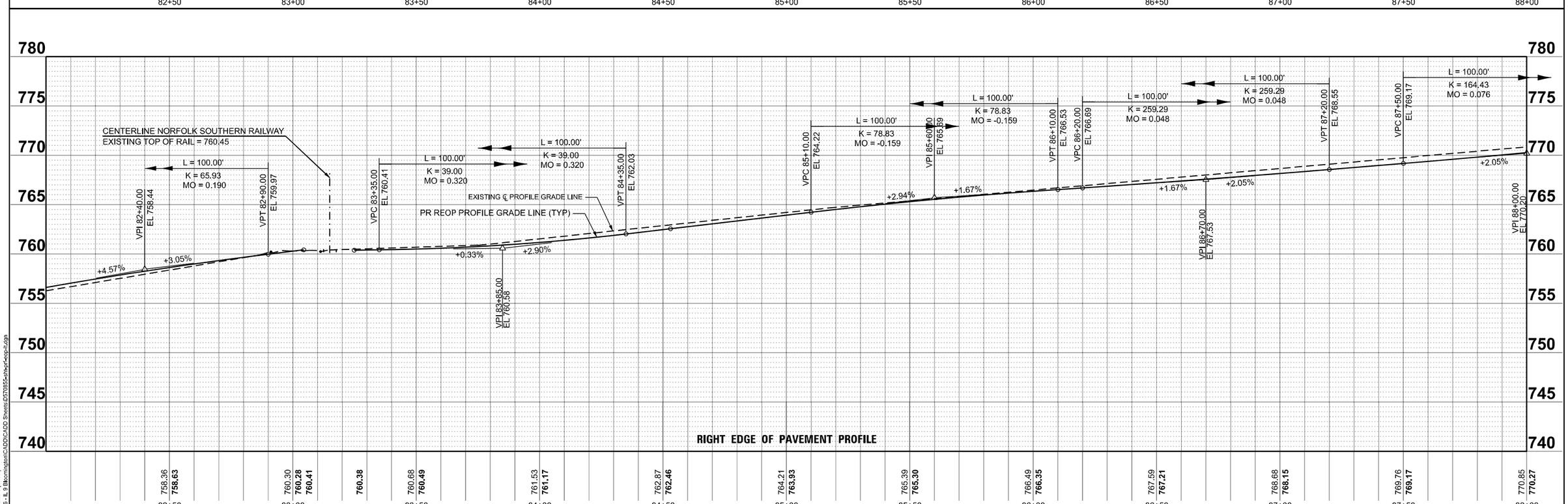

MODEL: IL_9_1 - Profile 5 [Sheet]
FILE NAME: V:\4216 - IL 9 Bloomington\CADD\CADD Sheets\D570855-sht-prf-eop-lt.dgn

Hutchison Engineering, Inc.	USER NAME = BDeCraene	DESIGNED -	REVISED - 11/16/2023
		DRAWN -	REVISED -
	PLOT SCALE = 0.16666633 ' / in.	CHECKED -	REVISED -
	PLOT DATE = 11/17/2023	DATE -	REVISED -

STATE OF ILLINOIS
DEPARTMENT OF TRANSPORTATION

FAP 693 (IL RTE 9)
W MARKET ST EDGE OF PAVEMENT PROFILE

SCALE: H=20 V=5 | SHEET 10 OF 18 SHEETS | STA. 60+00 R2 TO STA. 66+00 R2

F.A.P. RTE.	SECTION	COUNTY	TOTAL SHEETS	SHEET NO.
693	(129)RS-4	McLEAN	218	47

CONTRACT NO. 70855

ILLINOIS | FED. AID PROJECT

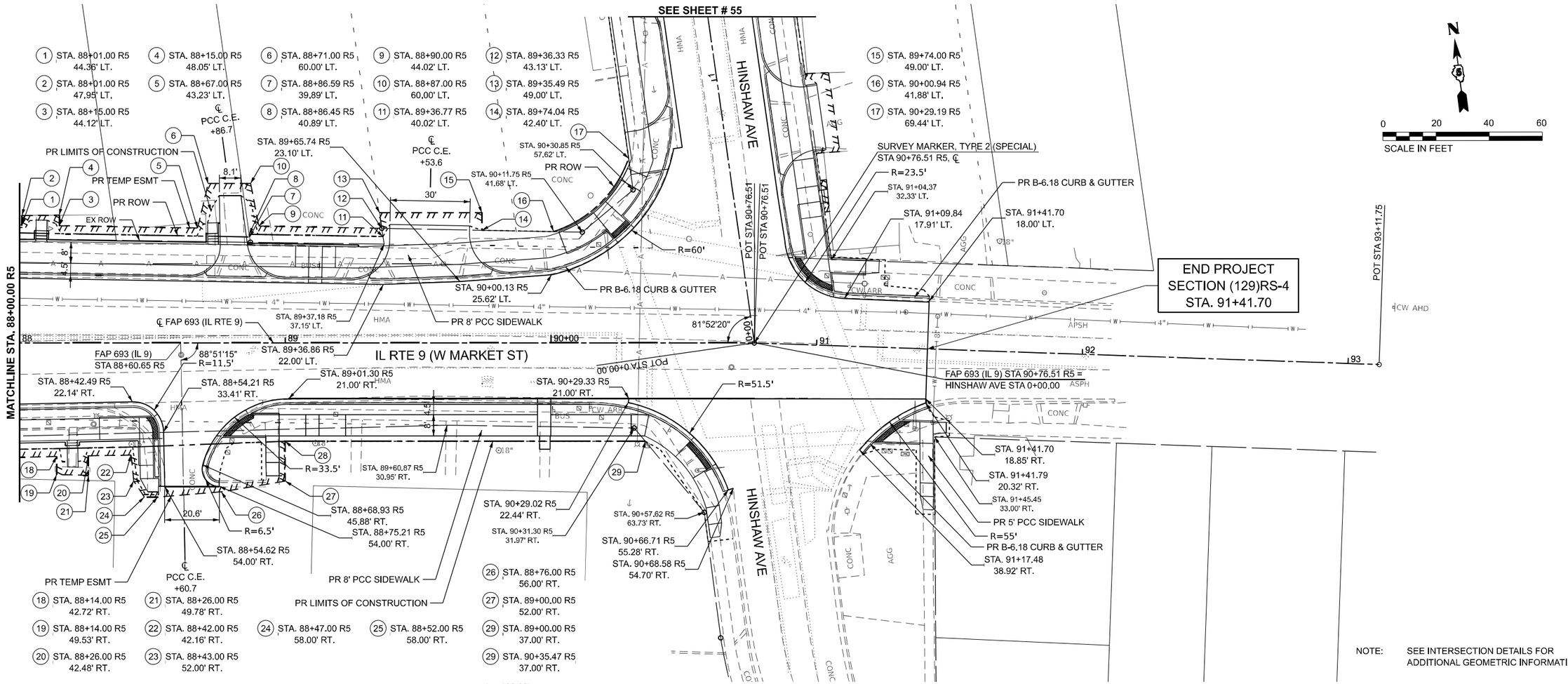

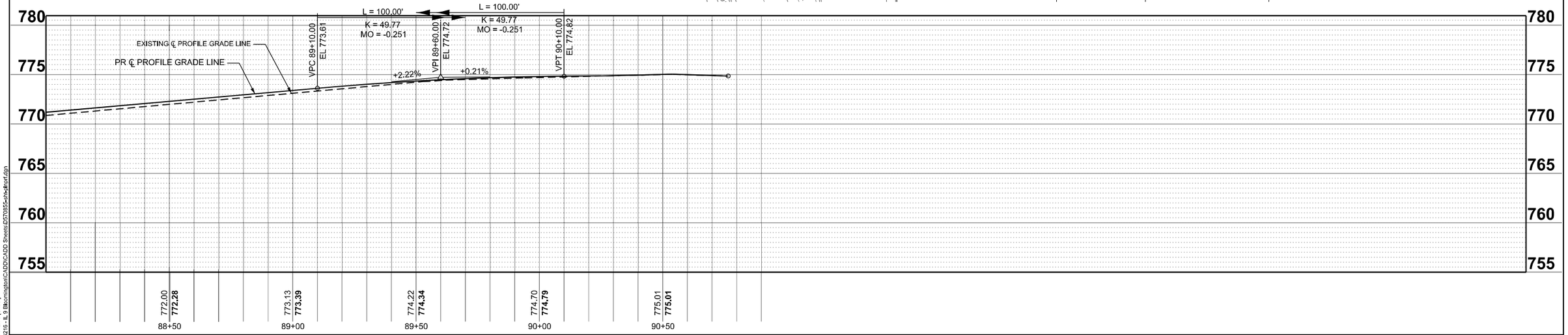

NOTE: SEE INTERSECTION DETAILS FOR ADDITIONAL GEOMETRIC INFORMATION.

MODEL: IL_D_1 - Plan 6 [Sheet]
FILE NAME: V:\4216 - IL 9 Bloomington\CADD\CADD Sheets\D570855-sht-hnkruf.dgn

Hutchison Engineering, Inc.

USER NAME = BDeCraene	DESIGNED -	REVISED -
	DRAWN -	REVISED -
PLOT SCALE = 0.16666633 ' / in.	CHECKED -	REVISED -
PLOT DATE = 10/17/2023	DATE -	REVISED -

STATE OF ILLINOIS
DEPARTMENT OF TRANSPORTATION

FAP 693 (IL RTE 9)
W MARKET ST PLAN AND PROFILE

SCALE: H=20 V=5 | SHEET 11 OF 18 SHEETS | STA. 88+00 R5 | TO STA. 93+11.75

F.A.P. RTE.	SECTION	COUNTY	TOTAL SHEETS	SHEET NO.
693	(129)RS-4	McLEAN	218	48
		CONTRACT NO. 70855		
	ILLINOIS FED. AID PROJECT			

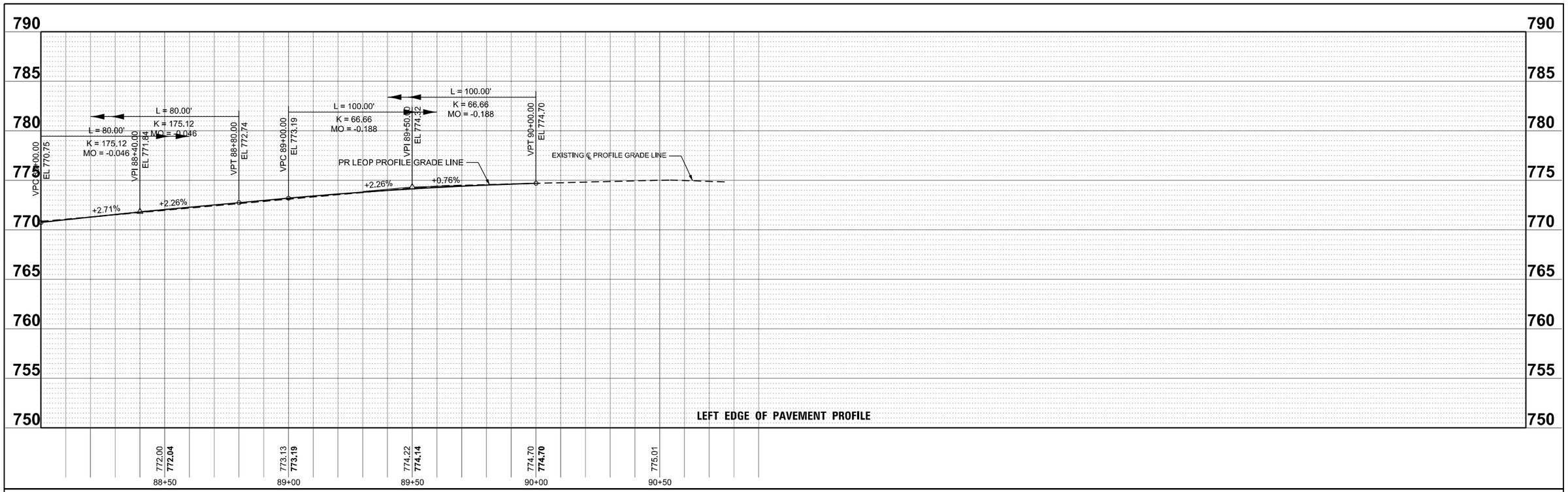

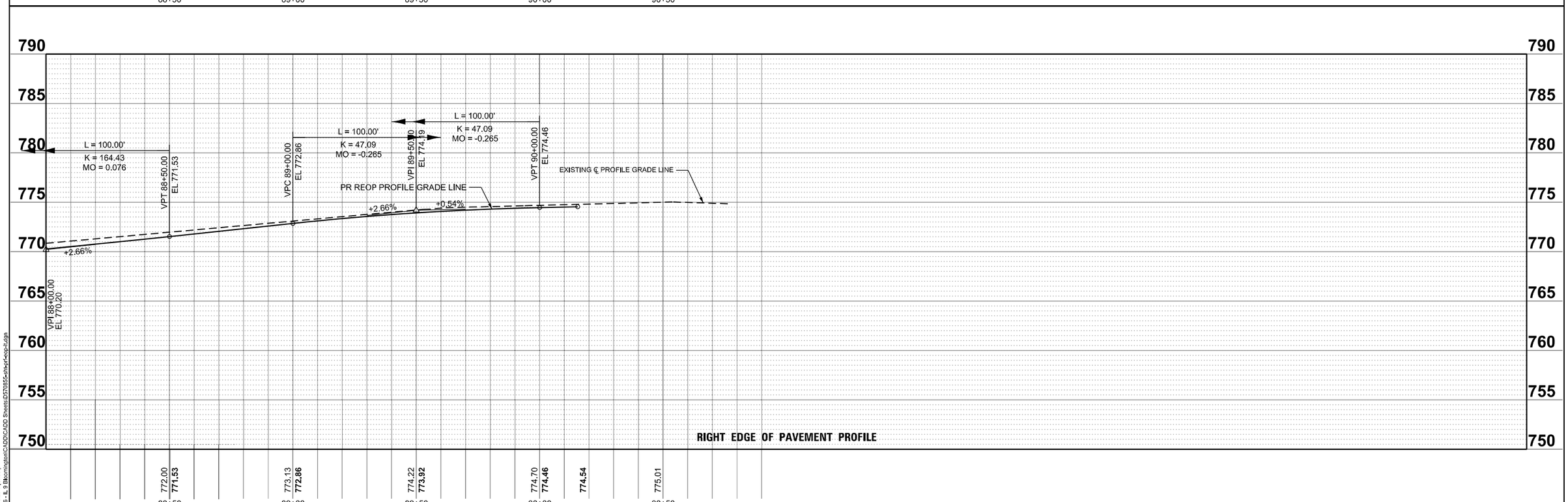

MODEL: IL_9_1 - Profile 6 [Sheet]
FILE NAME: V:\4216 - IL 9 Bloomington\CADD\CADD Sheets\D570855-sht-prf-eop-lt.dgn

Hutchison Engineering, Inc.	USER NAME = BDeCraene	DESIGNED -	REVISED -
		DRAWN -	REVISED -
	PLOT SCALE = 0.16666633 ' / in.	CHECKED -	REVISED -
	PLOT DATE = 10/17/2023	DATE -	REVISED -

STATE OF ILLINOIS
DEPARTMENT OF TRANSPORTATION

FAP 693 (IL RTE 9)
W MARKET ST EDGE OF PAVEMENT PROFILE

SCALE: H=20 V=5 | SHEET 12 OF 18 SHEETS | STA. 60+00 R2 TO STA. 66+00 R2

F.A.P. RTE.	SECTION	COUNTY	TOTAL SHEETS	SHEET NO.
693	(129)RS-4	McLEAN	218	49
		CONTRACT NO. 70855		
		ILLINOIS	FED. AID PROJECT	

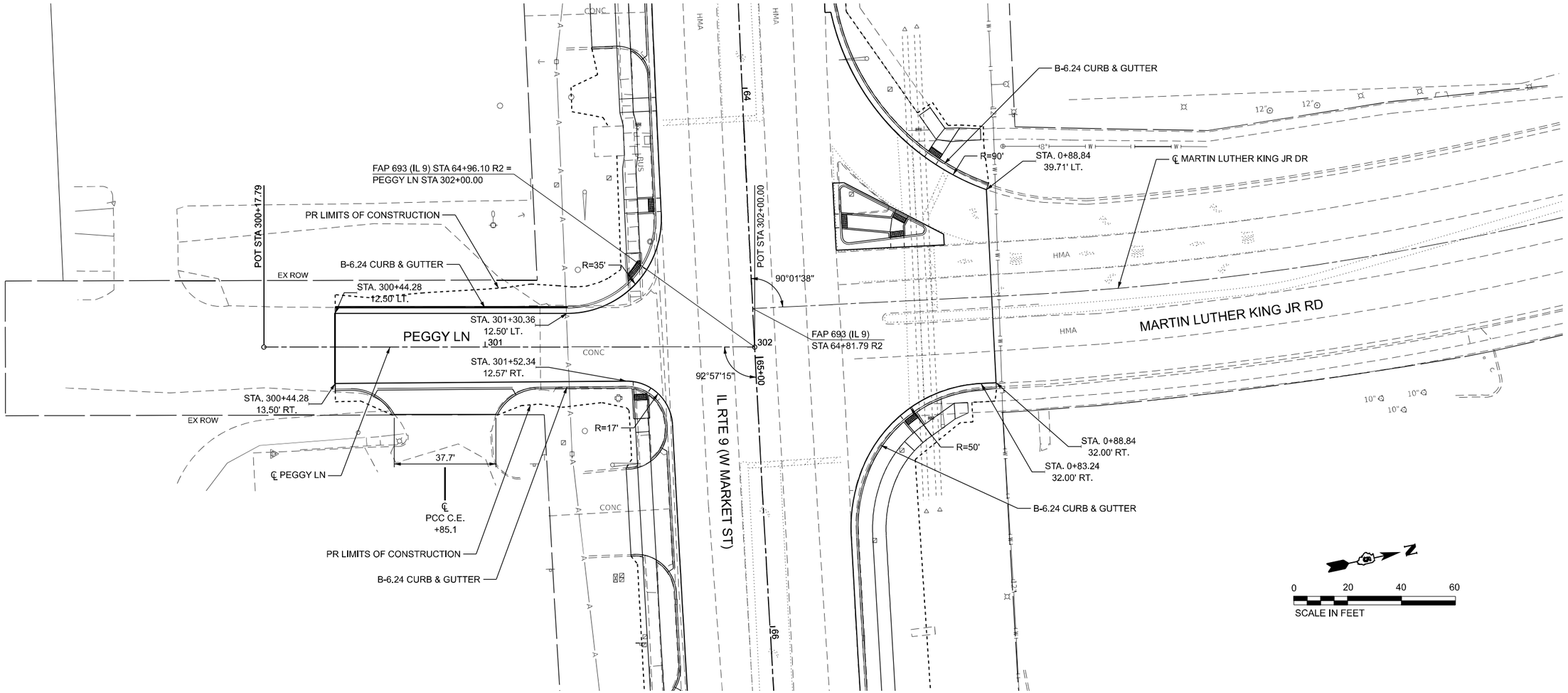

MODEL: EX_PEGGY - Plan 7 [Sheet]
FILE NAME: V:\4216 - IL 9 Bloomington\CADD\CADD Sheets\D570855-sht-plnprf.dgn

Hutchison Engineering, Inc.	USER NAME = BDeCraene	DESIGNED -	REVISED -
		DRAWN -	REVISED -
	PLOT SCALE = 0.16666633 ' / in.	CHECKED -	REVISED -
	PLOT DATE = 10/17/2023	DATE -	REVISED -

STATE OF ILLINOIS
DEPARTMENT OF TRANSPORTATION

FAP 693 (IL RTE 9)
PEGGY LN PLAN AND PROFILE

SCALE: H=20 V=5 | SHEET 13 OF 18 SHEETS | STA. 300+17.79 TO STA. 302+00

F.A.P. RTE.	SECTION	COUNTY	TOTAL SHEETS	SHEET NO.
693	(129)RS-4	McLEAN	218	50
		CONTRACT NO. 70855		
		ILLINOIS FED. AID PROJECT		

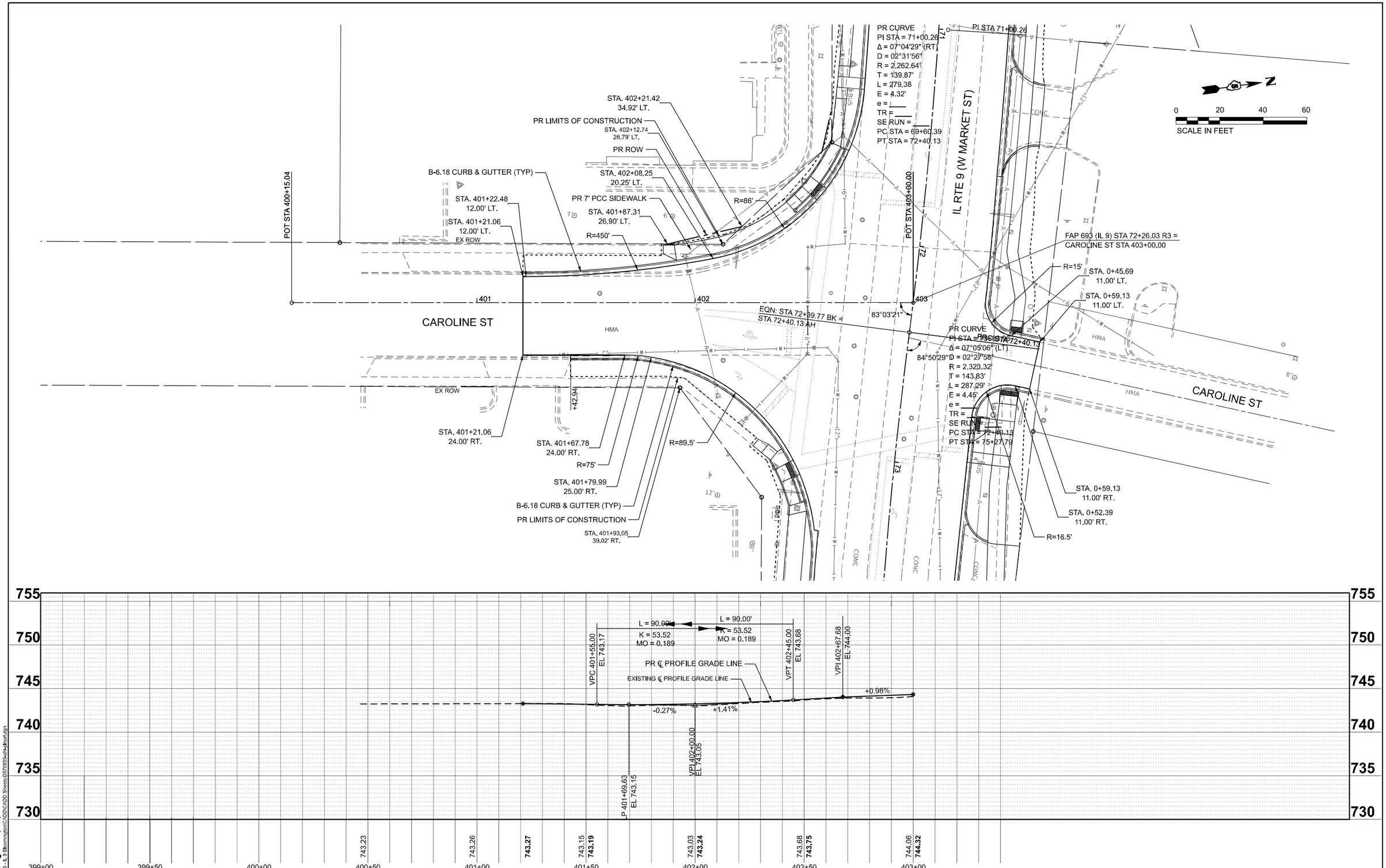

MODEL: EX_CAROLINE_S - Plan 8 [Sheet]
FILE NAME: V:\4216 - IL 9 Bloomington\CADD\CADD Sheets\D570855-sht-plnprf.dgn

Hutchison Engineering, Inc.

USER NAME = BDeCraene	DESIGNED -	REVISED -	
	DRAWN -	REVISED -	
PLOT SCALE = 0.16666633 ' / in.	CHECKED -	REVISED -	
PLOT DATE = 10/17/2023	DATE -	REVISED -	

STATE OF ILLINOIS
DEPARTMENT OF TRANSPORTATION

FAP 693 (IL RTE 9)
CAROLINE ST PLAN AND PROFILE

SCALE: H=20 V=5 | SHEET 14 OF 18 SHEETS | STA. 400+15.04 TO STA. 403+00

F.A.P. RTE.	SECTION	COUNTY	TOTAL SHEETS	SHEET NO.
693	(129)RS-4	McLEAN	218	51

CONTRACT NO. 70855

ILLINOIS | FED. AID PROJECT

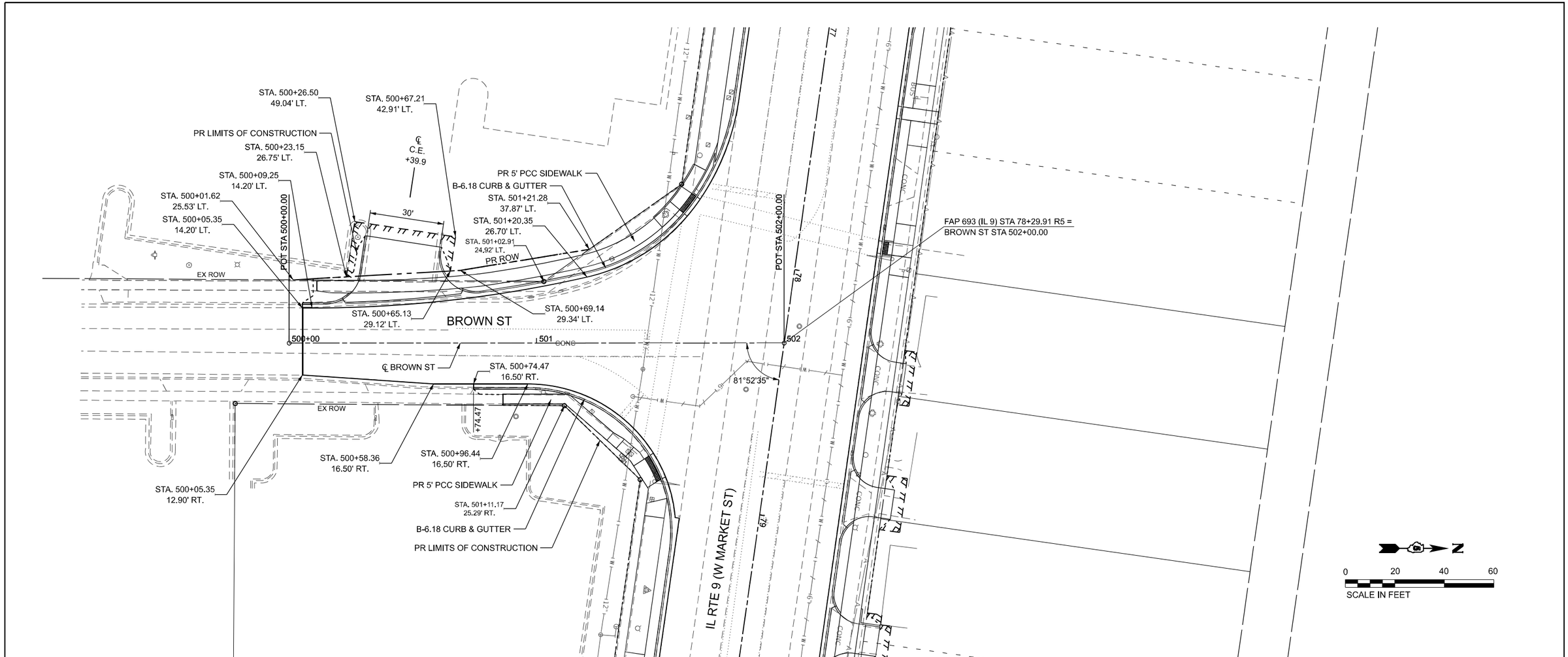

MODEL: EX_BROWN - Plan 1 [Sheet]
FILE NAME: V:\4216 - IL 9 Bloomington\CADD\CADD Sheets\D570855-sht-plnprf.dgn

Hutchison Engineering, Inc.	USER NAME = BDeCraene	DESIGNED -	REVISED -
		DRAWN -	REVISED -
	PLOT SCALE = 0.16666633 ' / in.	CHECKED -	REVISED -
	PLOT DATE = 10/17/2023	DATE -	REVISED -

STATE OF ILLINOIS
DEPARTMENT OF TRANSPORTATION

FAP 693 (IL RTE 9)
BROWN ST PLAN AND PROFILE

SCALE: H=20 V=5 | SHEET 15 OF 18 SHEETS | STA. 60+00 R2 TO STA. 66+00 R2

F.A.P. RTE.	SECTION	COUNTY	TOTAL SHEETS	SHEET NO.
693	(129)RS-4	McLEAN	218	52
		CONTRACT NO. 70855		
		ILLINOIS	FED. AID PROJECT	

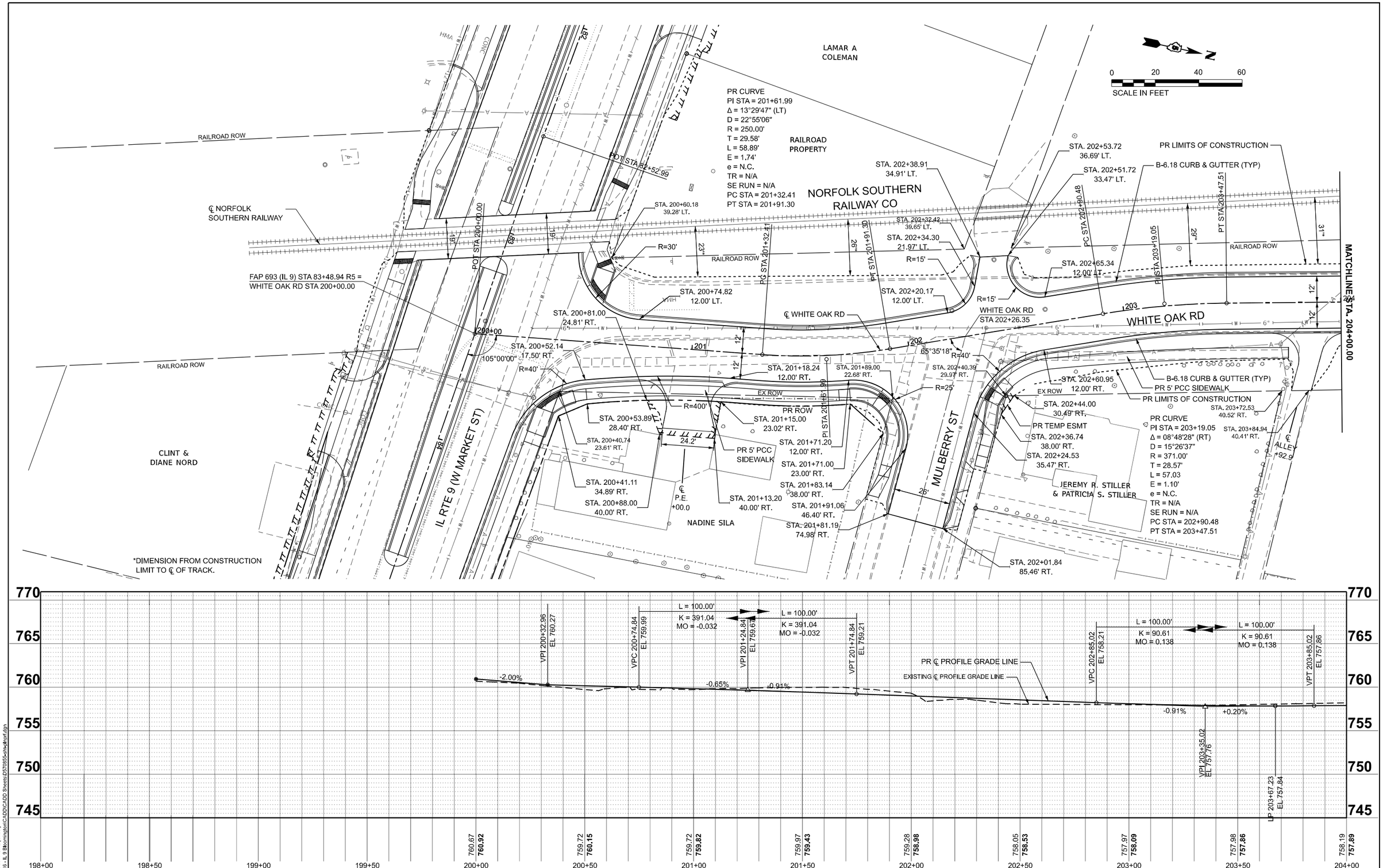

MODEL: WHITE_OAK - Plan 2 [Sheet]
FILE NAME: V:\4216 - IL 9 Bloomington\CADD\CADD Sheets\D570855-sht-plnprf.dgn

Hutchison Engineering, Inc.	USER NAME = BDeCraene	DESIGNED -	REVISED - 11/16/2023
		DRAWN -	REVISED -
	PLOT SCALE = 0.16666633 ' / in.	CHECKED -	REVISED -
	PLOT DATE = 11/17/2023	DATE -	REVISED -

STATE OF ILLINOIS
DEPARTMENT OF TRANSPORTATION

FAP 693 (IL RTE 9)
WHITE OAK RD PLAN AND PROFILE

SCALE: H=20 V=5 | SHEET 16 OF 18 SHEETS | STA. 200+00 TO STA. 204+00

F.A.P. RTE.	SECTION	COUNTY	TOTAL SHEETS	SHEET NO.
693	(129)RS-4	McLEAN	218	53
		CONTRACT NO. 70855		
		ILLINOIS FED. AID PROJECT		

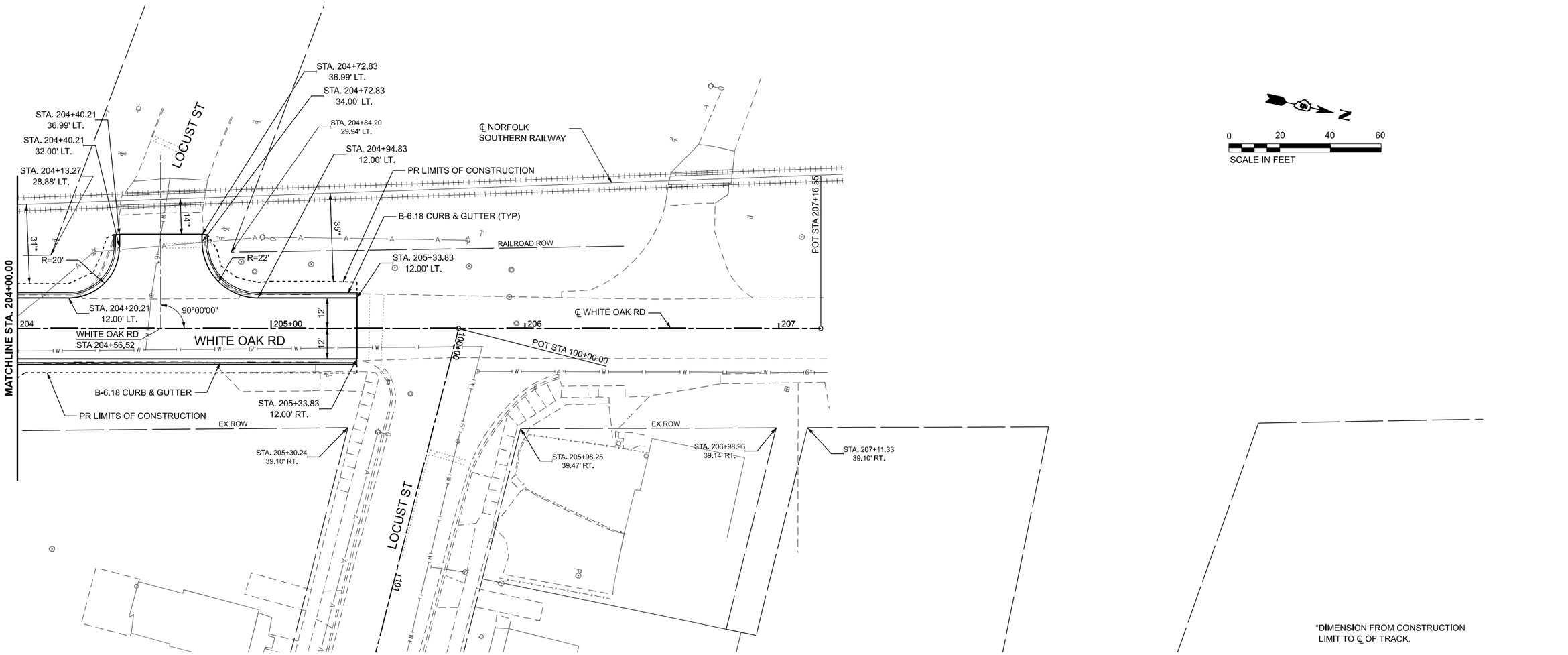

*DIMENSION FROM CONSTRUCTION LIMIT TO ℄ OF TRACK.

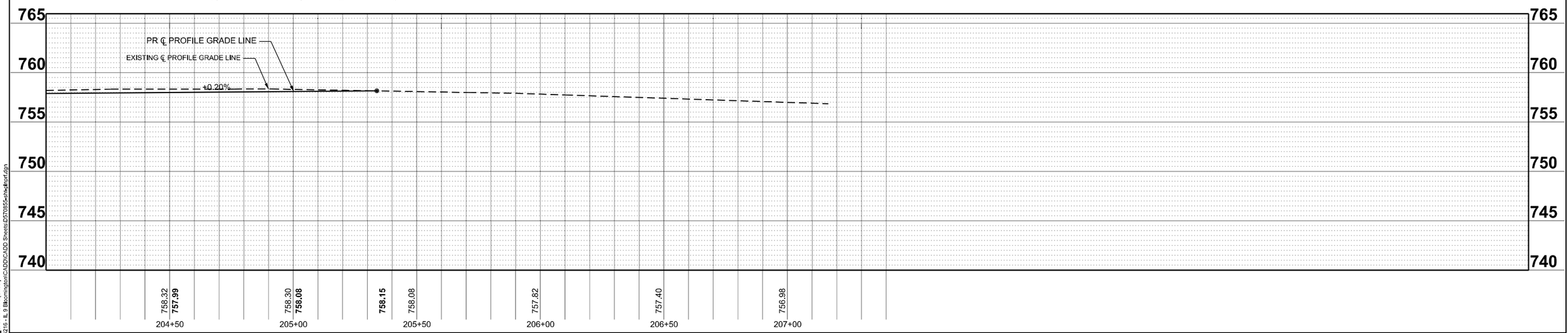

MODEL: WHITE_OAK - Plan 3 [Sheet]
FILE NAME: V:\4216 - IL 9 Bloomington\CADD\CADD Sheets\D57085sdhe4lsnf.dgn

Hutchison Engineering, Inc.	USER NAME = BDeCraene	DESIGNED -	REVISED - 11/16/2023	STATE OF ILLINOIS DEPARTMENT OF TRANSPORTATION	FAP 693 (IL RTE 9) WHITE OAK RD PLAN AND PROFILE
		DRAWN -	REVISED -		
	PLOT SCALE = 0.16666633 ' / in.	CHECKED -	REVISED -		SCALE: H=20 V=5 | SHEET 17 OF 18 SHEETS | STA. 204+00 TO STA. 207+16.55
	PLOT DATE = 11/17/2023	DATE -	REVISED -		

F.A.P. RTE.	SECTION	COUNTY	TOTAL SHEETS	SHEET NO.
693	(129)RS-4	McLEAN	218	54
		CONTRACT NO. 70855		
	ILLINOIS | FED. AID PROJECT			

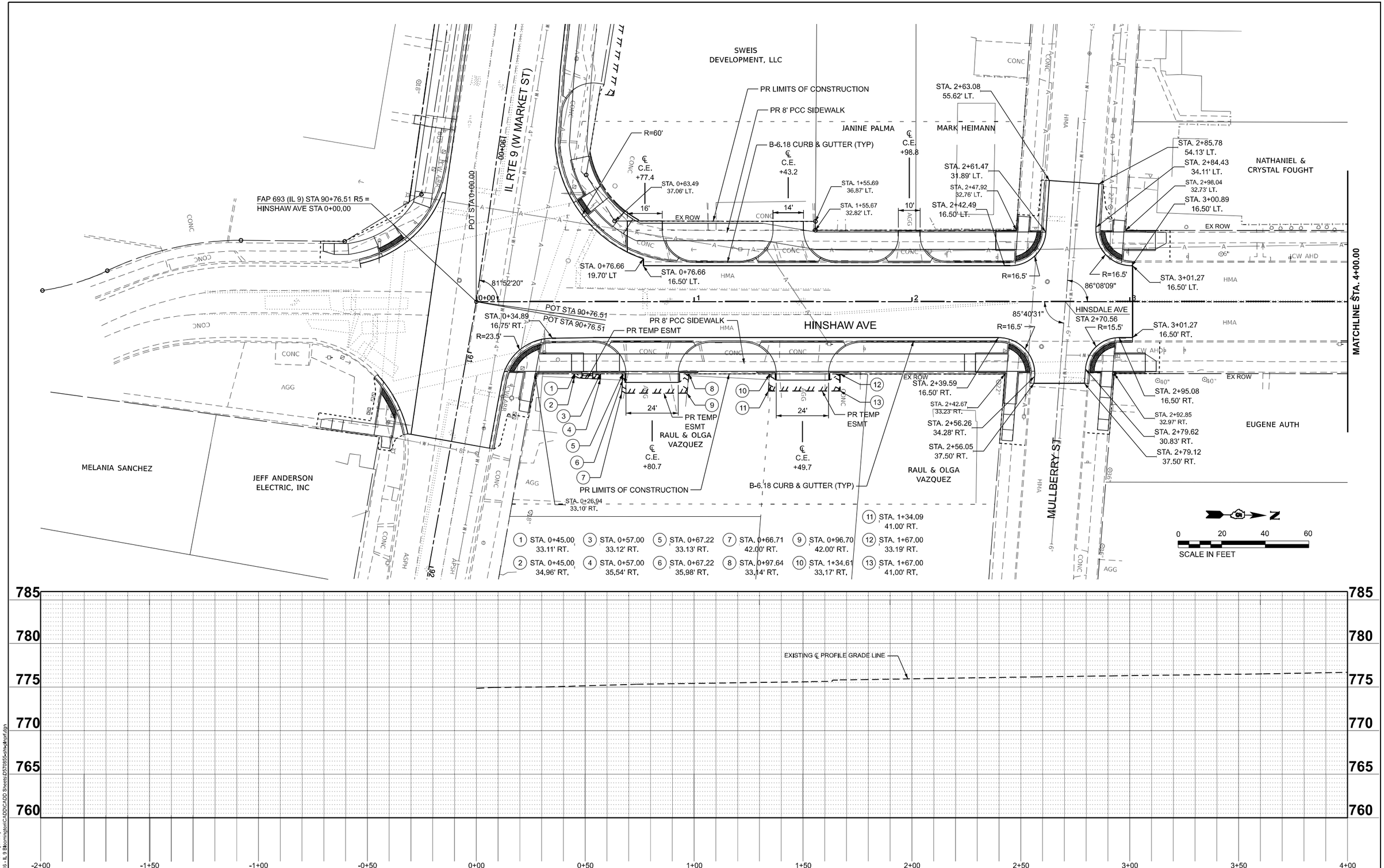

MODEL: HINSHAW - Plan 4 [Sheet]
FILE NAME: V:\4216 - IL 9 Bloomington\CADD\CADD Sheets\D570855-sht-plnprf.dgn

Hutchison Engineering, Inc.	USER NAME = BDeCraene	DESIGNED -	REVISED -
		DRAWN -	REVISED -
	PLOT SCALE = 0.16666633 ' / in.	CHECKED -	REVISED -
	PLOT DATE = 10/17/2023	DATE -	REVISED -

STATE OF ILLINOIS
DEPARTMENT OF TRANSPORTATION

FAP 693 (IL RTE 9)
HINSHAW AVE PLAN AND PROFILE

SCALE: H=20 V=5 | SHEET 18 OF 18 SHEETS | STA. 0+00 TO STA. 4+00

F.A.P. RTE.	SECTION	COUNTY	TOTAL SHEETS	SHEET NO.
693	(129)RS-4	McLEAN	218	55
		CONTRACT NO. 70855		
		ILLINOIS FED. AID PROJECT		

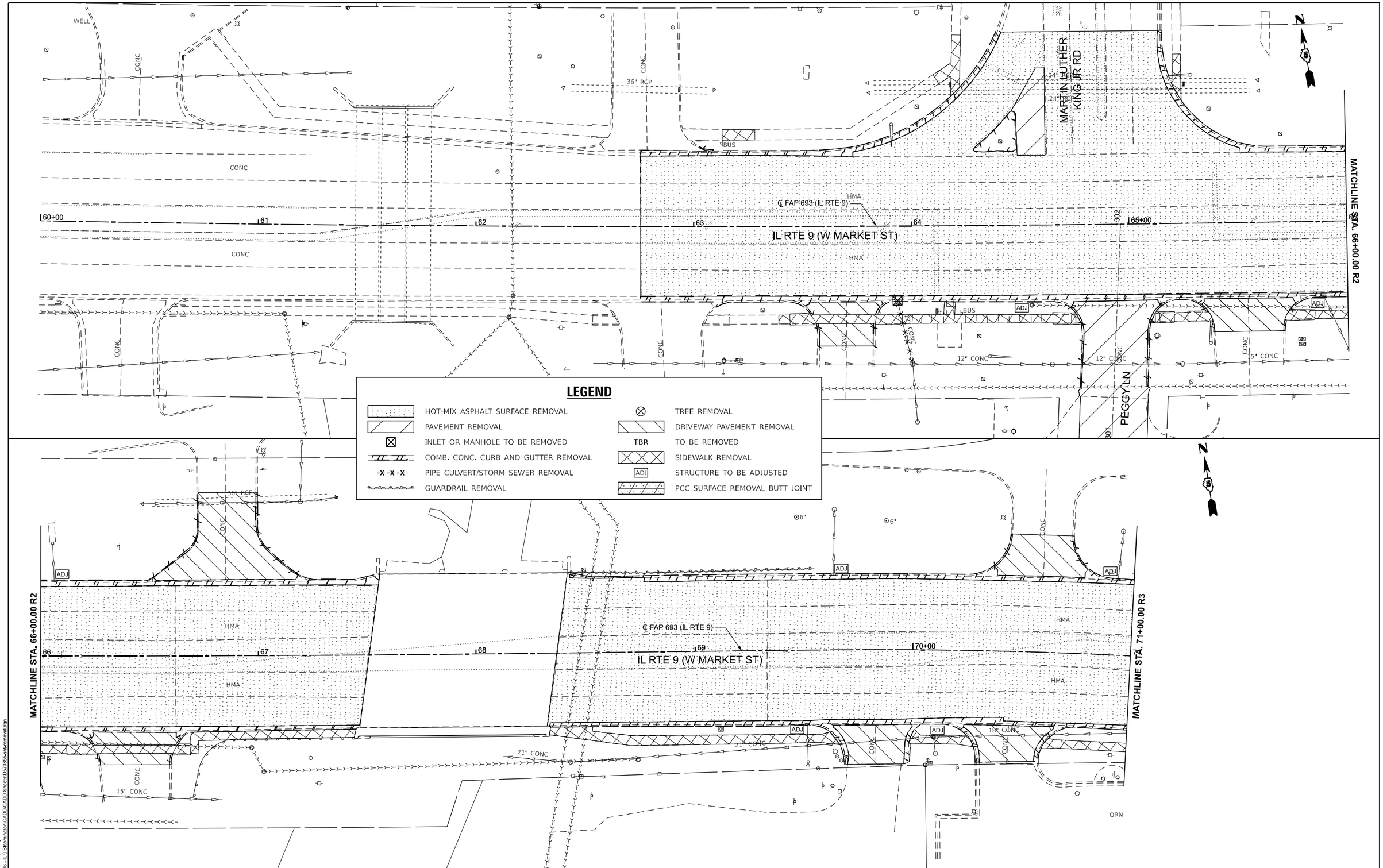

MODEL: IL_9_1 - Plan 5 [Sheet]
FILE NAME: V:\4216 - IL 9 Bloomington\CADD\CADD Sheets\D570855-sht-removal.dgn

Hutchison Engineering, Inc.	USER NAME = BDeCraene	DESIGNED -	REVISED -
		DRAWN -	REVISED -
	PLOT SCALE = 0.16666633 ' / in.	CHECKED -	REVISED -
	PLOT DATE = 10/17/2023	DATE -	REVISED -

STATE OF ILLINOIS
DEPARTMENT OF TRANSPORTATION

FAP 693 (IL RTE 9)
W MARKET ST REMOVAL PLAN

SCALE: 1"=20' | SHEET 1 OF 6 SHEETS | STA. 60+00 R2 TO STA. 71+00 R3

F.A.P. RTE.	SECTION	COUNTY	TOTAL SHEETS	SHEET NO.
693	(129)RS-4	McLEAN	218	56
		CONTRACT NO. 70855		
		ILLINOIS	FED. AID PROJECT	

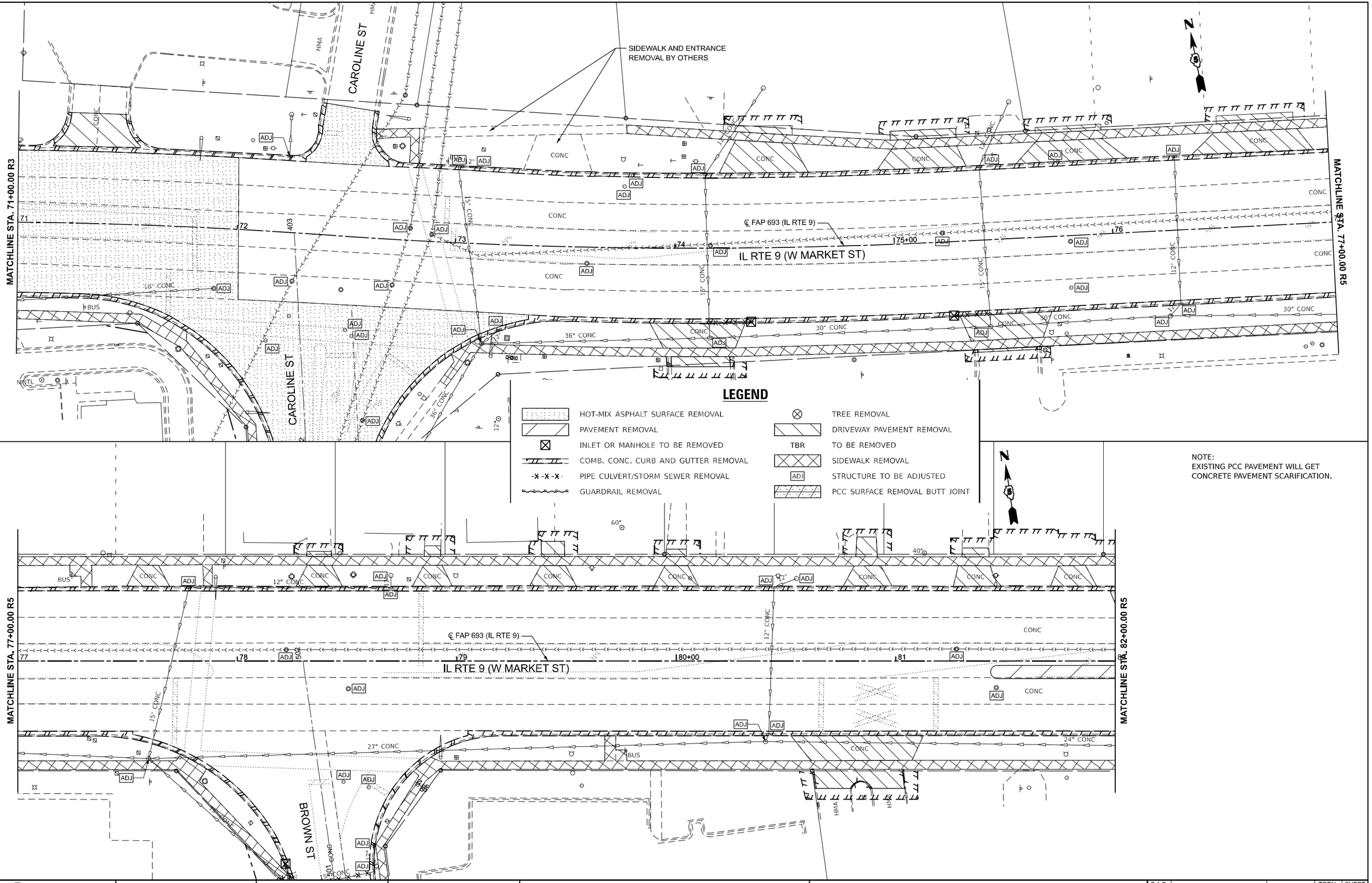

LEGEND

HOT-MIX ASPHALT SURFACE REMOVAL	TREE REMOVAL
PAVEMENT REMOVAL	DRIVEWAY PAVEMENT REMOVAL
INLET OR MANHOLE TO BE REMOVED	TBR TO BE REMOVED
COMB. CONC. CURB AND GUTTER REMOVAL	SIDEWALK REMOVAL
PIPE CULVERT/STORM SEWER REMOVAL	ADJ STRUCTURE TO BE ADJUSTED
GUARDRAIL REMOVAL	PCC SURFACE REMOVAL BUTT JOINT

NOTE:
EXISTING PCC PAVEMENT WILL GET CONCRETE PAVEMENT SCARIFICATION.

MODEL: IL_0_1 - Plan 7 [Sheet]
FILE NAME: V:\4216 - IL 9 Bloomington\CADD\CADD Sheets\D570855-smh-removal.dgn

Hutchison Engineering, Inc.

USER NAME = BDeCraene	DESIGNED -	REVISED -
	DRAWN -	REVISED -
PLOT SCALE = 0.16666633 ' / in.	CHECKED -	REVISED -
PLOT DATE = 10/17/2023	DATE -	REVISED -

STATE OF ILLINOIS
DEPARTMENT OF TRANSPORTATION

FAP 693 (IL RTE 9)
W MARKET ST REMOVAL PLAN

SCALE: 1"=20' | SHEET 2 OF 6 SHEETS | STA. 71+00 R3 TO STA. 82+00 R5

F.A.P. RTE.	SECTION	COUNTY	TOTAL SHEETS	SHEET NO.
693	(129)RS-4	McLEAN	218	57
		CONTRACT NO. 70855		
	ILLINOIS FED. AID PROJECT			

MATCHLINE STA. 82+00.00 R5

MATCHLINE STA. 88+00.00 R5

NORFOLK SOUTHERN RAILWAY CO

RAILROAD ROW

WHITE OAK RD

℄ NORFOLK SOUTHERN RAILWAY

℄ FAP 693 (IL RTE 9)

IL RTE 9 (W MARKET ST)

STILLWELL ST

HINSHAW AVE

CONCRETE STEP REMOVAL

RETAINING WALL REMOVAL

NOTE:
EXISTING PCC PAVEMENT WILL GET CONCRETE PAVEMENT SCARIFICATION.

LEGEND

- HOT-MIX ASPHALT SURFACE REMOVAL
- PAVEMENT REMOVAL
- INLET OR MANHOLE TO BE REMOVED
- COMB. CONC. CURB AND GUTTER REMOVAL
- PIPE CULVERT/STORM SEWER REMOVAL
- GUARDRAIL REMOVAL
- TREE REMOVAL
- DRIVEWAY PAVEMENT REMOVAL
- TBR TO BE REMOVED
- SIDEWALK REMOVAL
- ADJ STRUCTURE TO BE ADJUSTED
- PCC SURFACE REMOVAL BUTT JOINT

MODEL: IL_9_1 - IRan 9 [Sheet]
FILE NAME: V:\4216 - IL 9 Bloomington\CADD\CADD Sheets\D57085sitheremoval.dgn

Hutchison Engineering, Inc.

USER NAME = BDeCraene	DESIGNED -	REVISED -	11/16/2023
	DRAWN -	REVISED -	
PLOT SCALE = 0.16666633 ' / In.	CHECKED -	REVISED -	
PLOT DATE = 11/17/2023	DATE -	REVISED -	

STATE OF ILLINOIS
DEPARTMENT OF TRANSPORTATION

FAP 693 (IL RTE 9)
W MARKET ST REMOVAL PLAN

SCALE: 1"=20' | SHEET 3 OF 6 SHEETS | STA. 82+00 R5 | TO STA. 93+11.75

F.A.P. RTE.	SECTION	COUNTY	TOTAL SHEETS	SHEET NO.
693	(129)RS-4	McLEAN	218	58
		CONTRACT NO. 70855		
	ILLINOIS FED. AID PROJECT			

LEGEND

HOT-MIX ASPHALT SURFACE REMOVAL	TREE REMOVAL
PAVEMENT REMOVAL	DRIVEWAY PAVEMENT REMOVAL
INLET OR MANHOLE TO BE REMOVED	TBR TO BE REMOVED
COMB. CONC. CURB AND GUTTER REMOVAL	SIDEWALK REMOVAL
PIPE CULVERT/STORM SEWER REMOVAL	ADJ STRUCTURE TO BE ADJUSTED
GUARDRAIL REMOVAL	PCC SURFACE REMOVAL BUTT JOINT

IL RTE 9 (W MARKET ST)

PEGGY LN

℄ PEGGY LN

MARTIN LUTHER KING JR RD

CAROLINE ST

USER NAME = BDeCraene	DESIGNED -	REVISED -	
	DRAWN -	REVISED -	
PLOT SCALE = 0.16666633 ' / in.	CHECKED -	REVISED -	
PLOT DATE = 10/17/2023	DATE -	REVISED -	

Hutchison Engineering, Inc.

STATE OF ILLINOIS
DEPARTMENT OF TRANSPORTATION

FAP 693 (IL RTE 9)
PEGGY LN & CAROLINE ST ST REMOVAL PLAN

SCALE: 1"=20' | SHEET 4 OF 6 SHEETS | STA. VAR | TO STA. VAR

F.A.P. RTE.	SECTION	COUNTY	TOTAL SHEETS	SHEET NO.
693	(129)RS-4	McLEAN	218	59
		CONTRACT NO. 70855		
	ILLINOIS FED. AID PROJECT			

MODEL: EX_PEGGY - Plan 4 [Sheet]
FILE NAME: V:\4216 - IL 9 Bloomington\CADD\CADD Sheets\D570855-plh-removal.dgn

LEGEND

- HOT-MIX ASPHALT SURFACE REMOVAL
- PAVEMENT REMOVAL
- INLET OR MANHOLE TO BE REMOVED
- COMB. CONC. CURB AND GUTTER REMOVAL
- PIPE CULVERT/STORM SEWER REMOVAL
- GUARDRAIL REMOVAL
- TREE REMOVAL
- DRIVEWAY PAVEMENT REMOVAL
- TBR — TO BE REMOVED
- SIDEWALK REMOVAL
- ADJ — STRUCTURE TO BE ADJUSTED
- PCC SURFACE REMOVAL BUTT JOINT

RAILROAD ROW

℄ NORFOLK SOUTHERN RAILWAY

NORFOLK SOUTHERN RAILWAY CO

WHITE OAK RD

℄ WHITE OAK RD

RTE 9 (W MARKET ST)

MULBERRY ST

LOCUST ST

MATCHLINE STA. 204+00.00

MATCHLINE STA. 204+00.00

200+00 201 202 203 204 205+00 206 207

Hutchison Engineering, Inc.

USER NAME = BDeCraene	DESIGNED -	REVISED -	11/16/2023
	DRAWN -	REVISED -	
PLOT SCALE = 0.16666633 ' / In.	CHECKED -	REVISED -	
PLOT DATE = 11/17/2023	DATE -	REVISED -	

STATE OF ILLINOIS
DEPARTMENT OF TRANSPORTATION

FAP 693 (IL RTE 9)
WHITE OAK RD REMOVAL PLAN

SCALE: 1"=20' | SHEET 5 OF 6 SHEETS | STA. 200+00 | TO STA. 207+00

F.A.P. RTE.	SECTION	COUNTY	TOTAL SHEETS	SHEET NO.
693	(129)RS-4	McLEAN	218	60
		CONTRACT NO. 70855		
	ILLINOIS	FED. AID PROJECT		

MODEL: WHITE_OAK - Plan 1 [Sheet]
FILE NAME: \\14216 - IL 9 Bloomington\CADD\CADD Sheets\D570855-plh-removal.dgn

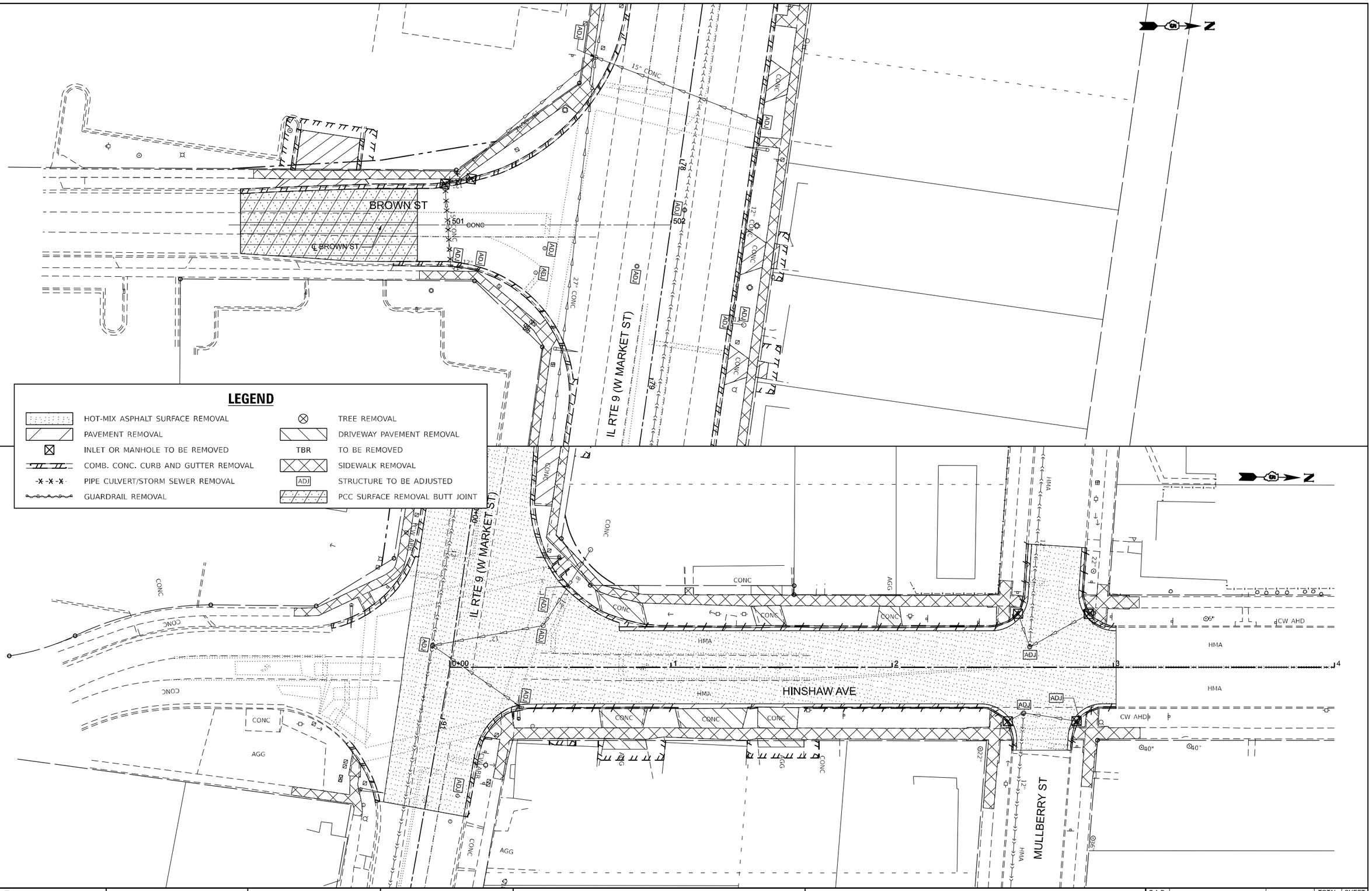

Hutchison Engineering, Inc.	USER NAME = BDeCraene	DESIGNED -	REVISED -
		DRAWN -	REVISED -
	PLOT SCALE = 0.16666633 ' / in.	CHECKED -	REVISED -
	PLOT DATE = 10/17/2023	DATE -	REVISED -

STATE OF ILLINOIS
DEPARTMENT OF TRANSPORTATION

FAP 693 (IL RTE 9)
BROWN ST & HINSHAW AVE REMOVAL PLAN

SCALE: 1"=20' | SHEET 6 OF 6 SHEETS | STA. VAR | TO STA. VAR

F.A.P. RTE.	SECTION	COUNTY	TOTAL SHEETS	SHEET NO.
693	(129)RS-4	McLEAN	218	61
		CONTRACT NO. 70855		
	ILLINOIS FED. AID PROJECT			

MODEL: EX_BROWN - Plan 6 [Sheet]
FILE NAME: V:\4216 - IL 9 Bloomington\CADD\CADD Sheets\D570855-plh-removal.dgn

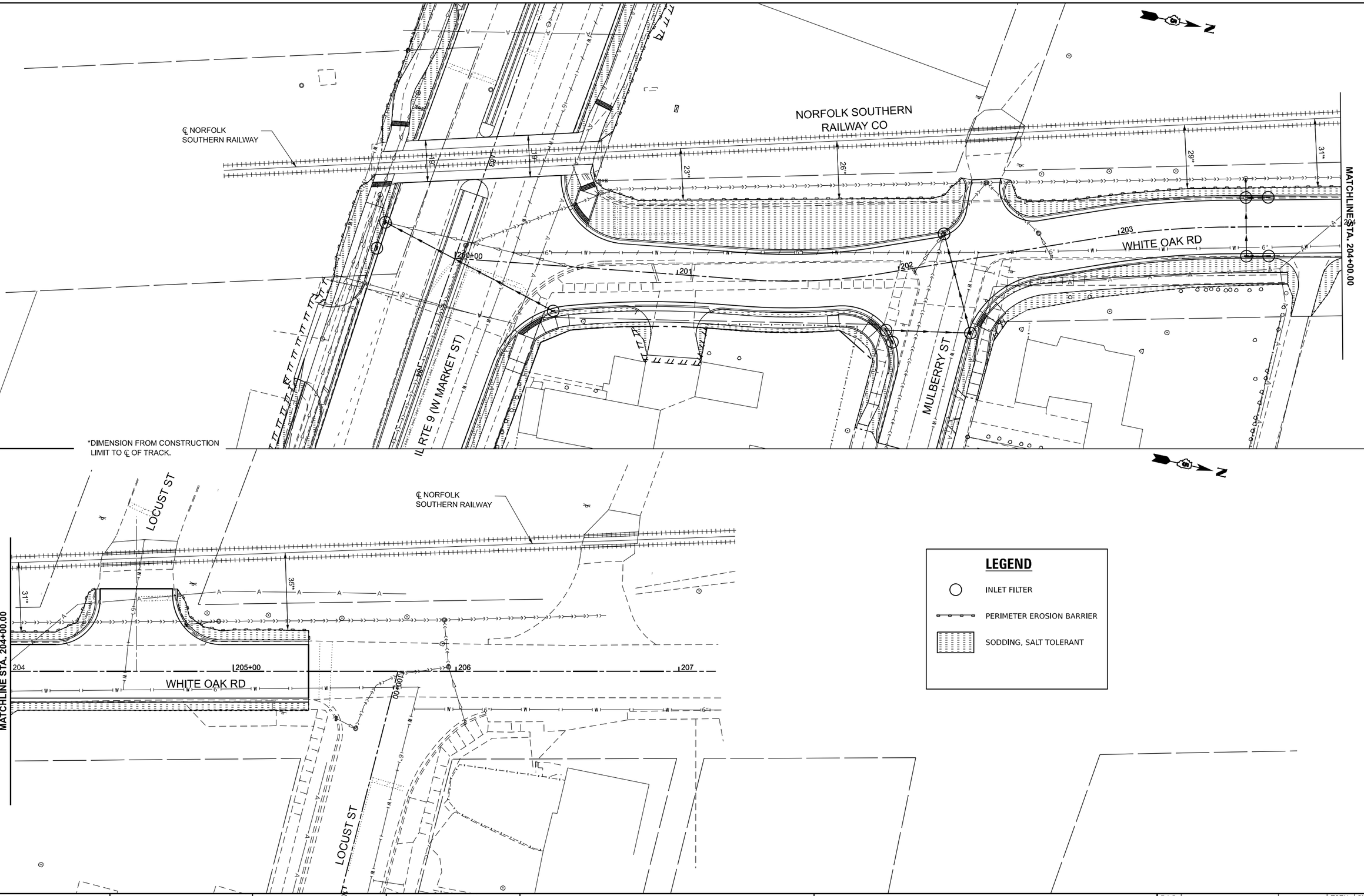

MODEL: WHITE_OAK - Plan 1 [Sheet]
FILE NAME: V:\4216 - IL 9 Bloomington\CADD\CADD Sheets\D570855-sht-erosion.dgn

Hutchison Engineering, Inc.

USER NAME = BDeCraene	DESIGNED -	REVISED - 11/16/2023
	DRAWN -	REVISED -
PLOT SCALE = 0.16666633 ' / In.	CHECKED -	REVISED -
PLOT DATE = 11/17/2023	DATE -	REVISED -

STATE OF ILLINOIS
DEPARTMENT OF TRANSPORTATION

FAP 693 (IL RTE 9)
WHITE OAK RD EROSION CONTROL PLAN

SCALE: 1"=20' | SHEET 1 OF 1 SHEETS | STA. 200+00 TO STA. 207+16.55

F.A.P. RTE.	SECTION	COUNTY	TOTAL SHEETS	SHEET NO.
693	(129)RS-4	McLEAN	218	62
		CONTRACT NO. 70855		
	ILLINOIS	FED. AID PROJECT		

STA 63+15.7, 59.6' LT
12" PRC FLARED END SECTION
INV = 739.37

PR STORM SEWER CL A T1
12" x 24' @ 0.60%

STA 63+15.4, 34.0' LT
PR INLET TA T3 F&G
RIM ELEV = 743.66
N INV = 739.52

PR CURVE
PI STA = 62+83.09
Δ = 03°55'27" (LT)
D = 09°20'24"
R = 16,850.36'
T = 577.28'
L = 1154.11'
E = 9.89'
e = ____
TR = ____
SE RUN = ____
PC STA = 57+05.81
PT STA = 68+59.92

MARTIN LUTHER KING JR RD

W MARKET ST

℄ FAP 693 (IL RTE 9)

IL RTE 9 (W MARKET ST)

60+00 61 62 63 64 65+00

PI STA 62+83.09

III 19.0

INLET TO BE REMOVED

12" STORM SEWER TO BE REMOVED

INV = 740.00*

BEGIN PROJECT
SECTION (129)RS-4
STA. 62+75.64

STA 63+20.6, 34.0' RT
PR INLET TA T3 F&G
RIM ELEV = 743.70
E INV = 740.51

PR STORM SEWER CL A T1
12" x 72' @ 0.40%

STA 63+95.6, 34.0' RT
PR INLET TB T3 F&G
RIM ELEV = 743.88
W INV = 740.21
S INV = 740.11

PR STORM SEWER CL A T1
12" x 26' @ 0.40%

MANHOLES TO BE ADJUSTED WITH NEW
TYPE 1 FRAME, CLOSED LID

INLETS TO BE ADJUSTED WITH
NEW TYPE 3 FRAME AND GRATE
RIM ELEV = 744.19

PEGGY LN

MATCHLINE STA 66+00.00 R2

*INVERT ELEVATION TO BE VERIFIED DURING CONSTRUCTION.

SCALE IN FEET
0 20 40 60

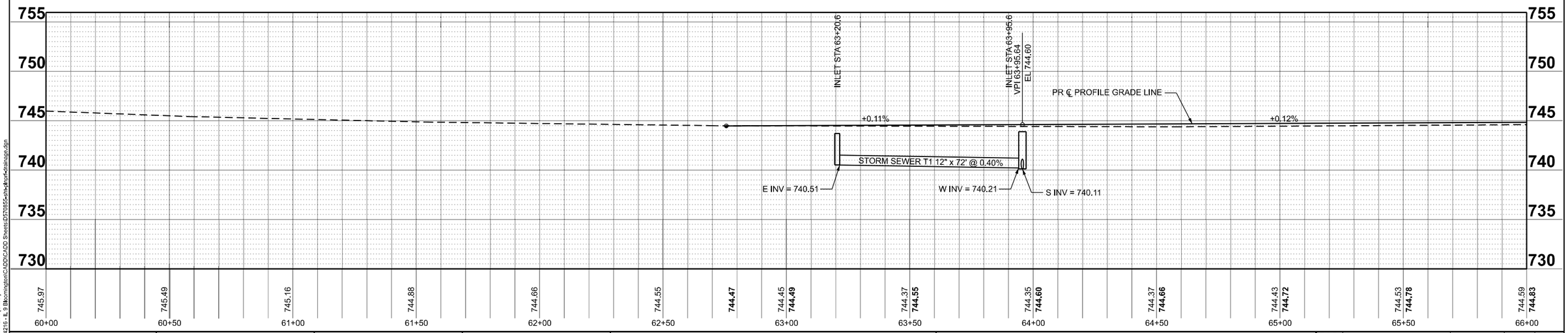

MODEL: IL_D_1 - Plan 1 [Sheet]
FILE NAME: V:\4216 - IL 9 Bloomington\CADD\CADD Sheets\D570855-sht-prof-drainage.dgn

Hutchison Engineering, Inc.

USER NAME = BDeCraene	DESIGNED -	REVISED -
	DRAWN -	REVISED -
PLOT SCALE = 0.16666633 ' / in.	CHECKED -	REVISED -
PLOT DATE = 10/17/2023	DATE -	REVISED -

STATE OF ILLINOIS
DEPARTMENT OF TRANSPORTATION

FAP 693 (IL RTE 9)
W MARKET ST DRAINAGE & UTILITY PLAN AND PROFILE

SCALE: H=20 V=5 | SHEET 1 OF 11 SHEETS | STA. 60+00 R2 TO STA. 66+00 R2

F.A.P. RTE.	SECTION	COUNTY	TOTAL SHEETS	SHEET NO.
693	(129)RS-4	McLEAN	218	63
		CONTRACT NO. 70855		
	ILLINOIS FED. AID PROJECT			

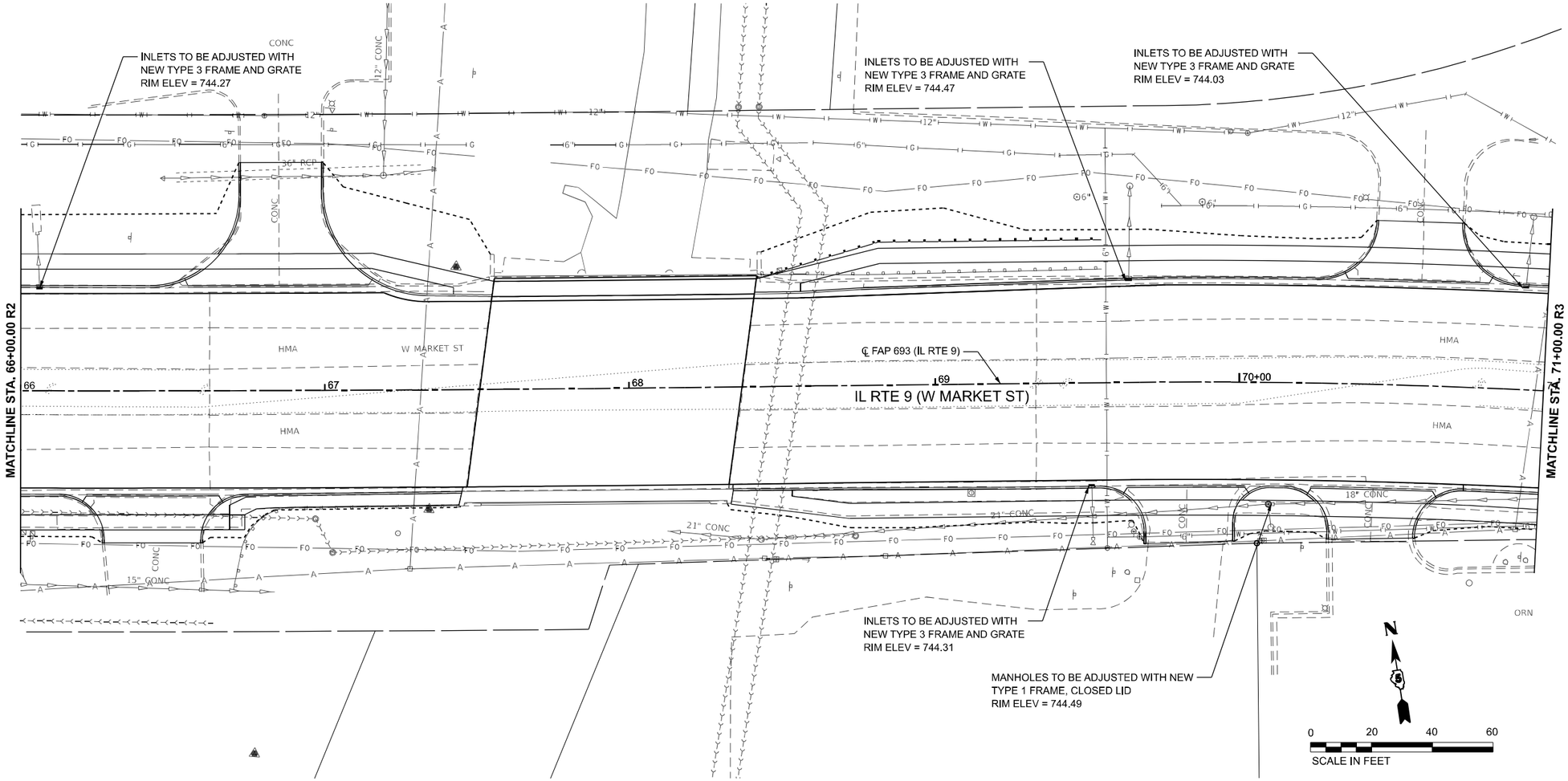

MODEL: IL_9_1 - Plan 2 [Sheet]
FILE NAME: V:\4216 - IL 9 Bloomington\CADD\CADD Sheets\D570855-sht-plnprf-drainage.dgn

Hutchison Engineering, Inc.

USER NAME = BDeCraene	DESIGNED -	REVISED -	
	DRAWN -	REVISED -	
PLOT SCALE = 0.16666633 ' / In.	CHECKED -	REVISED -	
PLOT DATE = 10/17/2023	DATE -	REVISED -	

STATE OF ILLINOIS
DEPARTMENT OF TRANSPORTATION

FAP 693 (IL RTE 9)
W MARKET ST DRAINAGE & UTILITY PLAN AND PROFILE

SCALE: H=20 V=5 | SHEET 2 OF 11 SHEETS | STA. 66+00 R2 TO STA. 71+00 R3

F.A.P. RTE.	SECTION	COUNTY	TOTAL SHEETS	SHEET NO.
693	(129)RS-4	McLEAN	218	64
		CONTRACT NO. 70855		
	ILLINOIS FED. AID PROJECT			

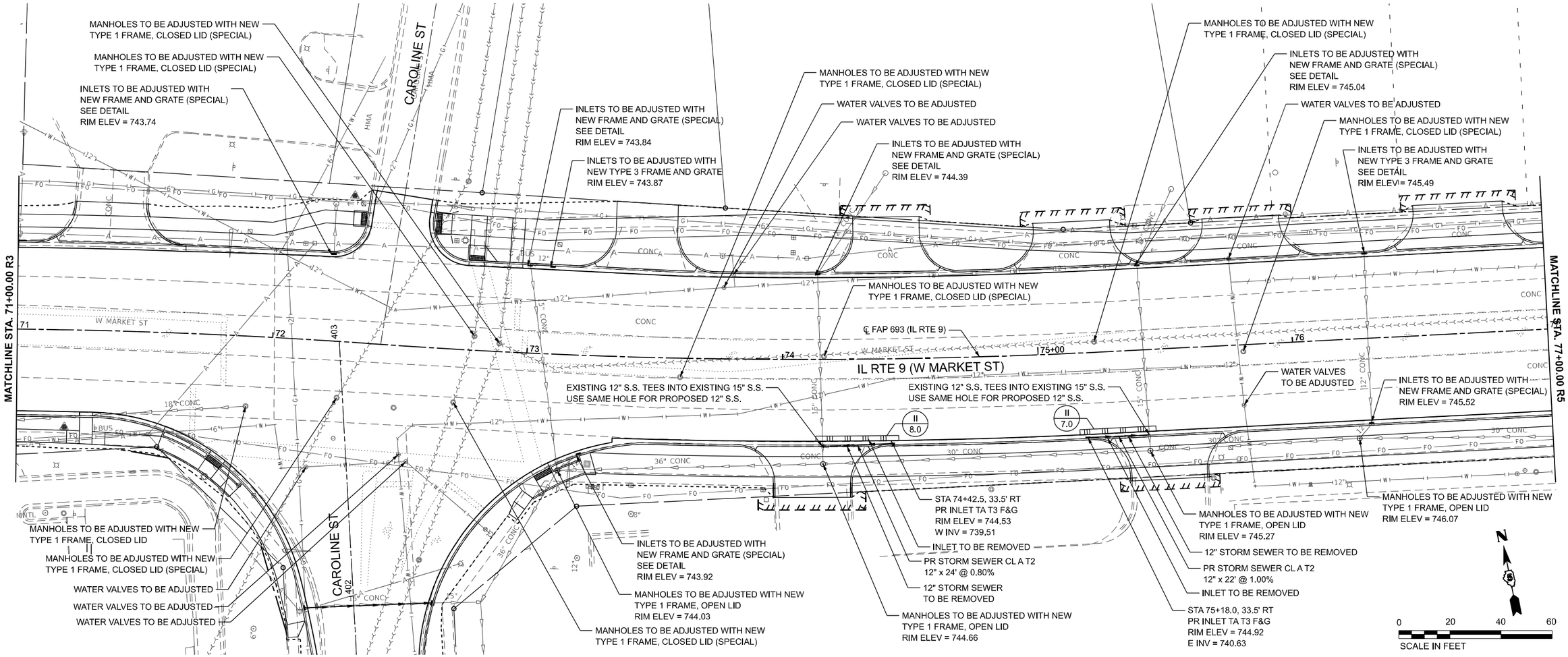

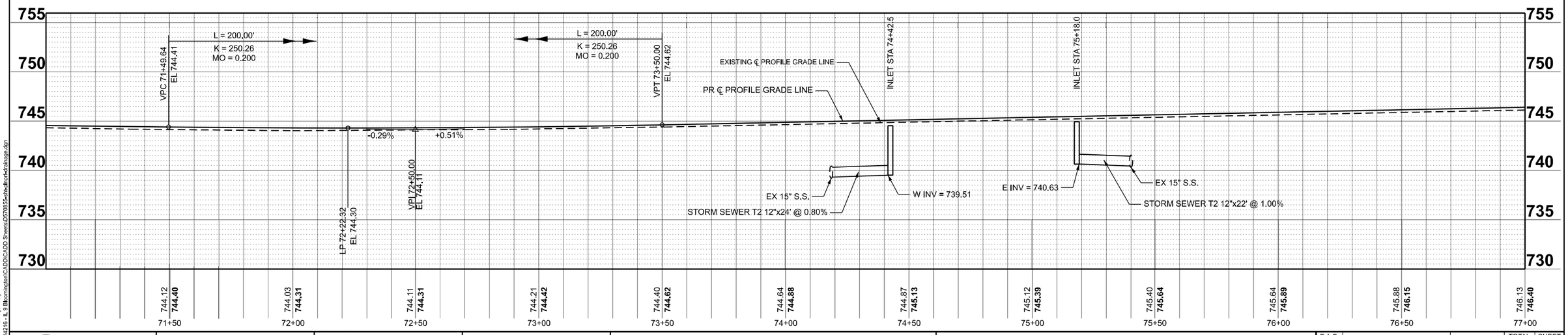

MODEL: IL_0_1 - Plan 3 [Sheet]
FILE NAME: V:\4216 - IL 9 Bloomington\CADD\CADD Sheets\D570855-sht-#sht-drainage.dgn

USER NAME = BDeCraene	DESIGNED -	REVISED -	
	DRAWN -	REVISED -	
PLOT SCALE = 0.16666633 ' / In.	CHECKED -	REVISED -	
PLOT DATE = 10/17/2023	DATE -	REVISED -	

Hutchison Engineering, Inc.

STATE OF ILLINOIS
DEPARTMENT OF TRANSPORTATION

FAP 693 (IL RTE 9)
W MARKET ST DRAINAGE & UTILITY PLAN AND PROFILE

SCALE: H=20 V=5 | SHEET 3 OF 11 SHEETS | STA. 71+00 R3 TO STA. 77+00 R5

F.A.P. RTE.	SECTION	COUNTY	TOTAL SHEETS	SHEET NO.
693	(129)RS-4	McLEAN	218	65
		CONTRACT NO. 70855		
	ILLINOIS FED. AID PROJECT			

INLETS TO BE ADJUSTED WITH NEW FRAME AND GRATE (SPECIAL) SEE DETAIL RIM ELEV = 746.26

MANHOLES TO BE ADJUSTED WITH NEW TYPE 1 FRAME, CLOSED LID (SPECIAL)

INLETS TO BE ADJUSTED WITH NEW TYPE 1 FRAME, OPEN LID RIM ELEV = 747.51

INLETS TO BE ADJUSTED WITH NEW FRAME AND GRATE (SPECIAL) SEE DETAIL RIM ELEV = 746.95

INLETS TO BE ADJUSTED WITH NEW TYPE 1 FRAME, OPEN LID RIM ELEV = 750.95

INLETS TO BE ADJUSTED WITH NEW FRAME AND GRATE (SPECIAL) SEE DETAIL RIM ELEV = 750.13

MANHOLES TO BE ADJUSTED WITH NEW TYPE 1 FRAME, CLOSED LID (SPECIAL)

MATCHLINE STA. 77+00.00 R5

MATCHLINE STA. 82+00.00 R5

℄ FAP 693 (IL RTE 9)

IL RTE 9 (W MARKET ST)

W MARKET ST

MANHOLES TO BE ADJUSTED WITH NEW TYPE 1 FRAME, CLOSED LID (SPECIAL)

MANHOLES TO BE ADJUSTED WITH NEW TYPE 1 FRAME, OPEN LID

WATER VALVES TO BE ADJUSTED

WATER VALVES TO BE ADJUSTED

MANHOLES TO BE ADJUSTED WITH NEW TYPE 1 FRAME, OPEN LID RIM ELEV = 750.61

INLETS TO BE ADJUSTED WITH NEW FRAME AND GRATE (SPECIAL) SEE DETAIL RIM ELEV = 750.11

MANHOLES TO BE ADJUSTED WITH NEW TYPE 1 FRAME, CLOSED LID (SPECIAL)

BROWN ST

N

0 20 40 60

SCALE IN FEET

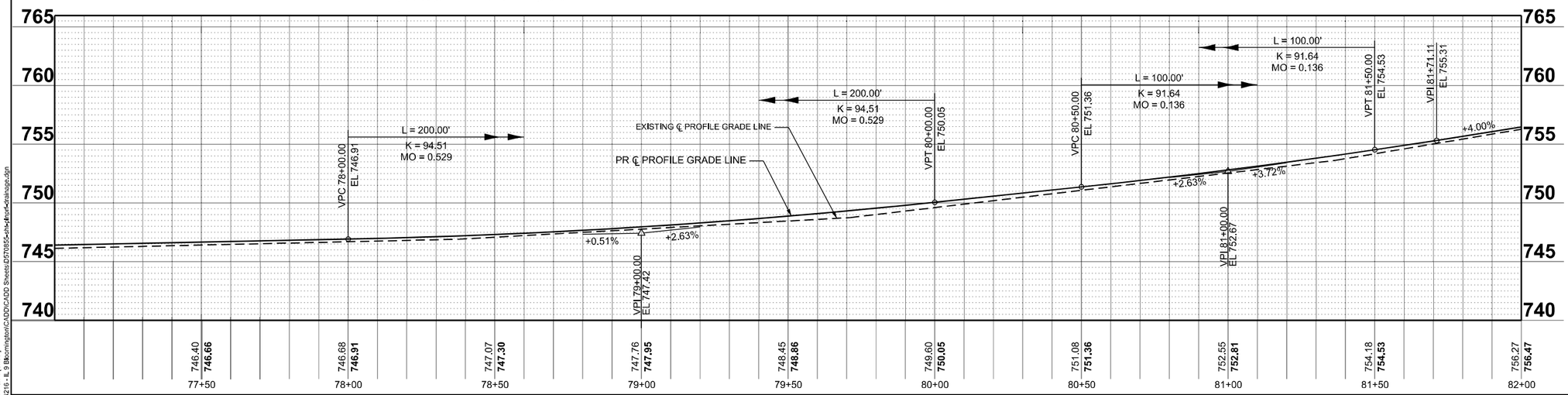

MODEL: IL_9_1 - Plan 4 [Sheet]
FILE NAME: V:\4216 - IL 9 Bloomington\CADD\CADD Sheets\D57655-sht-Plan4drainage.dgn

Hutchison Engineering, Inc.

USER NAME = BDeCraene	DESIGNED -	REVISED -	
	DRAWN -	REVISED -	
PLOT SCALE = 0.16666633 ' / In.	CHECKED -	REVISED -	
PLOT DATE = 10/17/2023	DATE -	REVISED -	

STATE OF ILLINOIS
DEPARTMENT OF TRANSPORTATION

FAP 693 (IL RTE 9)
W MARKET ST DRAINAGE & UTILITY PLAN AND PROFILE

SCALE: H=20 V=5 | SHEET 4 OF 11 SHEETS | STA. 77+00 R5 TO STA. 82+00 R5

F.A.P. RTE.	SECTION	COUNTY	TOTAL SHEETS	SHEET NO.
693	(129)RS-4	McLEAN	218	66
		CONTRACT NO. 70855		
	ILLINOIS FED. AID PROJECT			

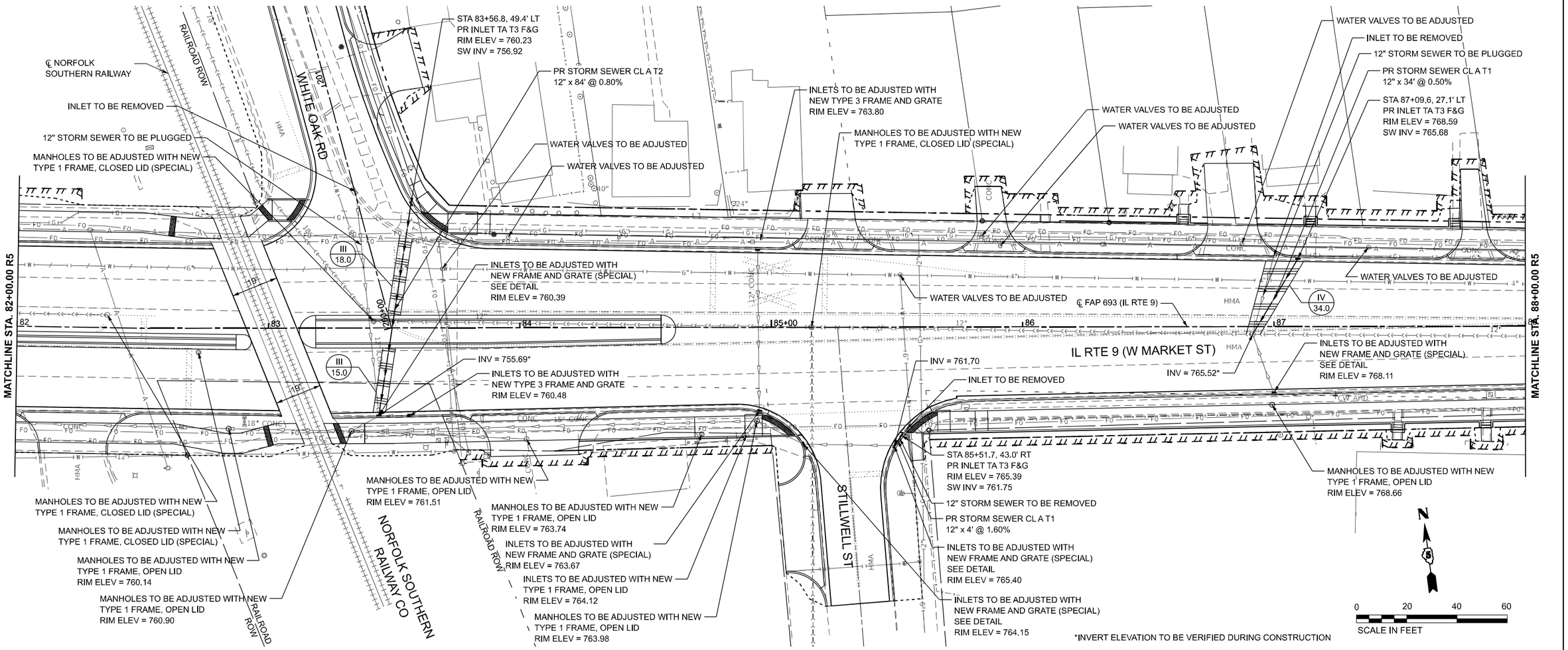

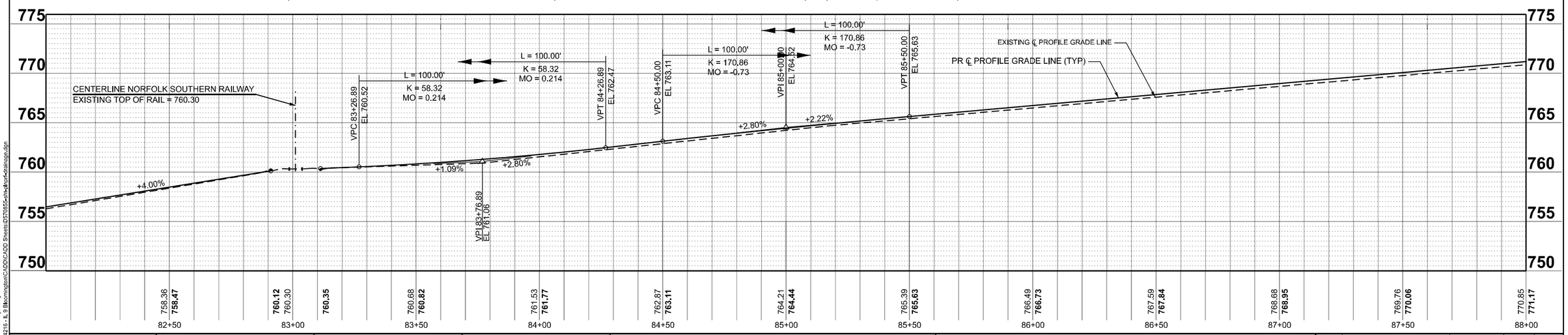

MODEL: fl_o_1 - Plan 5 [Sheet]
FILE NAME: V:\4216 - IL 9 Bloomington\CADD\C/ADD Sheets\D570855-sht-hor-drainage.dgn

Hutchison Engineering, Inc.	USER NAME = BDeCraene	DESIGNED -	REVISED - 11/16/2023	STATE OF ILLINOIS DEPARTMENT OF TRANSPORTATION	FAP 693 (IL RTE 9) W MARKET ST DRAINAGE & UTILITY PLAN AND PROFILE
		DRAWN -	REVISED -		
	PLOT SCALE = 0.16666633 ' / In.	CHECKED -	REVISED -		SCALE: H=20 V=5 | SHEET 5 OF 11 SHEETS | STA. 82+00 R5 TO STA. 88+00 R5
	PLOT DATE = 11/17/2023	DATE -	REVISED -		

F.A.P. RTE.	SECTION	COUNTY	TOTAL SHEETS	SHEET NO.
693	(129)RS-4	McLEAN	218	67
		CONTRACT NO. 70855		
	ILLINOIS FED. AID PROJECT			

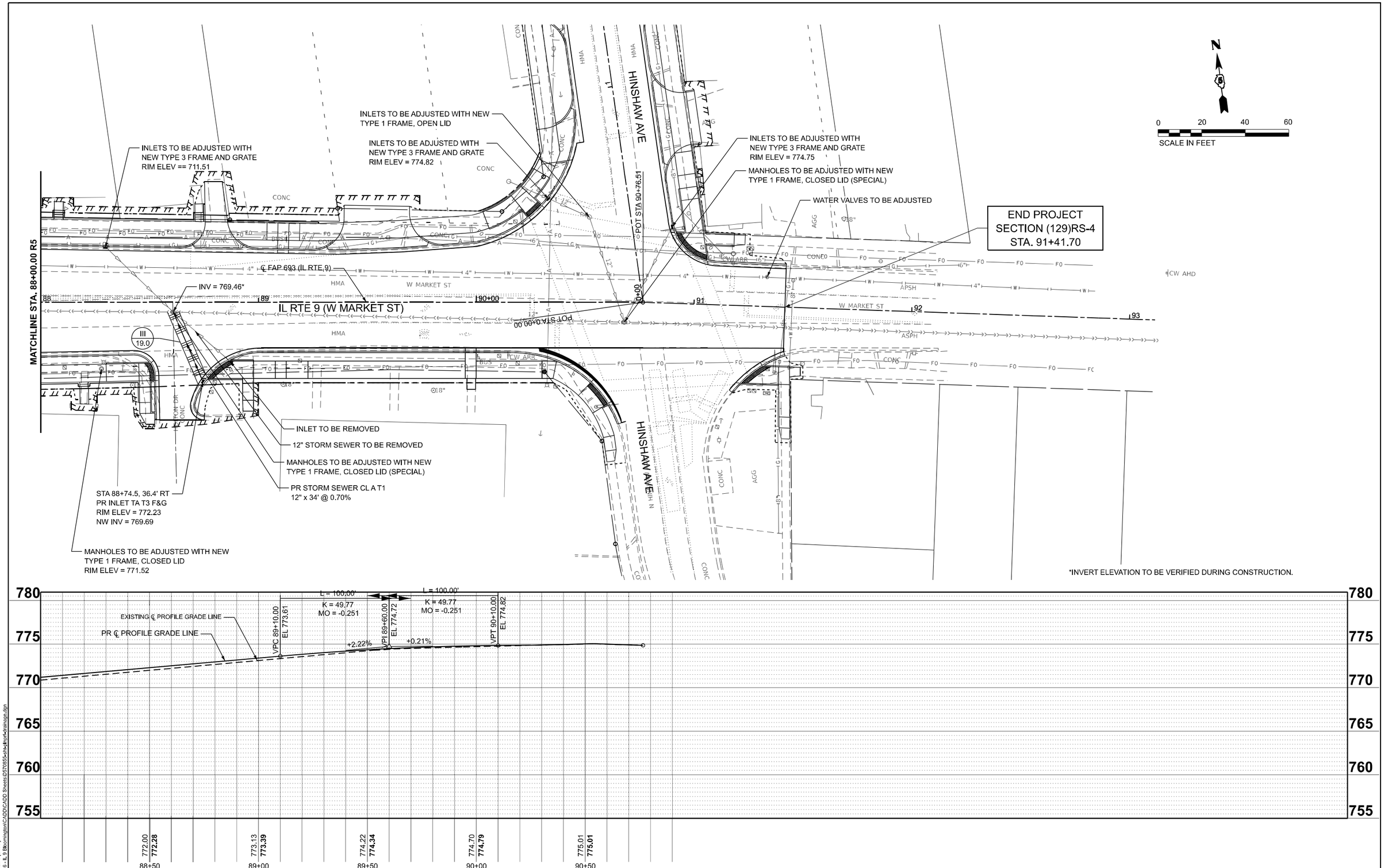

MODEL: IL_9_1 - Plan 6 [Sheet]
FILE NAME: V:\4216 - IL 9 Bloomington\CADD\CADD Sheets\D570855-sht-plnsrt-drainage.dgn

Hutchison Engineering, Inc.	USER NAME = BDeCraene	DESIGNED -	REVISED -
		DRAWN -	REVISED -
	PLOT SCALE = 0.16666633 ' / in.	CHECKED -	REVISED -
	PLOT DATE = 10/17/2023	DATE -	REVISED -

STATE OF ILLINOIS
DEPARTMENT OF TRANSPORTATION

FAP 693 (IL RTE 9)
W MARKET ST DRAINAGE & UTILITY PLAN AND PROFILE

SCALE: H=20 V=5 | SHEET 6 OF 11 SHEETS | STA. 88+00 R5 TO STA. 93+11.75

F.A.P. RTE.	SECTION	COUNTY	TOTAL SHEETS	SHEET NO.
693	(129)RS-4	McLEAN	218	68
		CONTRACT NO. 70855		
		ILLINOIS	FED. AID PROJECT	

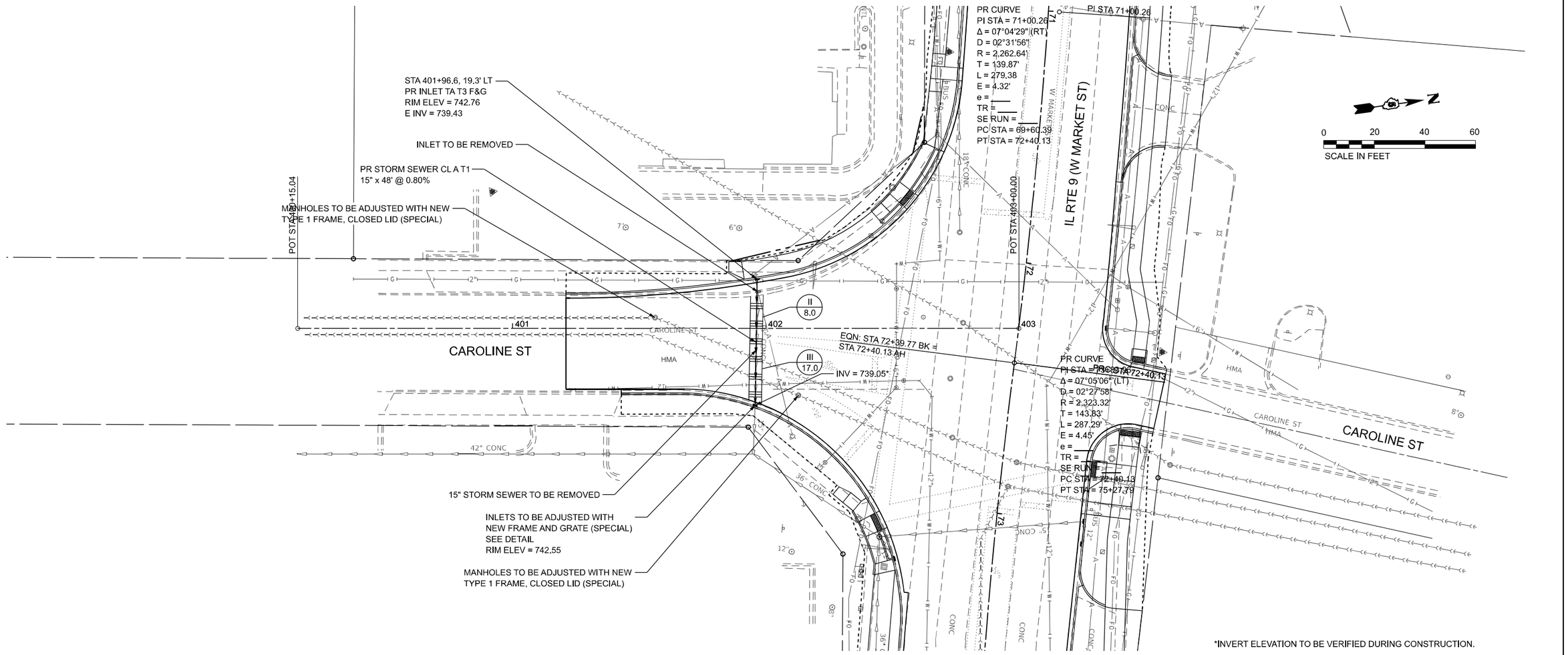

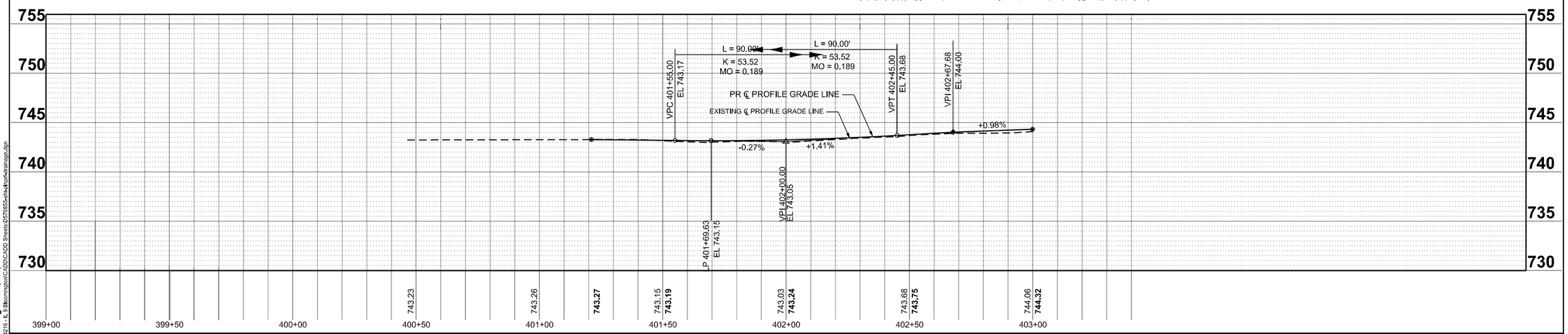

MODEL: EX_CAROLINE_S - Plan 8 [Sheet]
FILE NAME: V:\4216 - IL 9 Bloomington\CADD\C/ADD Sheets\D570855-sht-hor-drainage.dgn

Hutchison Engineering, Inc.	USER NAME = BDeCraene	DESIGNED -	REVISED -
		DRAWN -	REVISED -
	PLOT SCALE = 0.16666633 ' / In.	CHECKED -	REVISED -
	PLOT DATE = 10/17/2023	DATE -	REVISED -

STATE OF ILLINOIS
DEPARTMENT OF TRANSPORTATION

FAP 693 (IL RTE 9)
CAROLINE ST DRAINAGE & UTILITY PLAN AND PROFILE

SCALE: H=20 V=5 | SHEET 7 OF 11 SHEETS | STA. 400+15.04 | TO STA. 403+00

F.A.P. RTE.	SECTION	COUNTY	TOTAL SHEETS	SHEET NO.
693	(129)RS-4	McLEAN	218	69
		CONTRACT NO. 70855		
	ILLINOIS	FED. AID PROJECT		

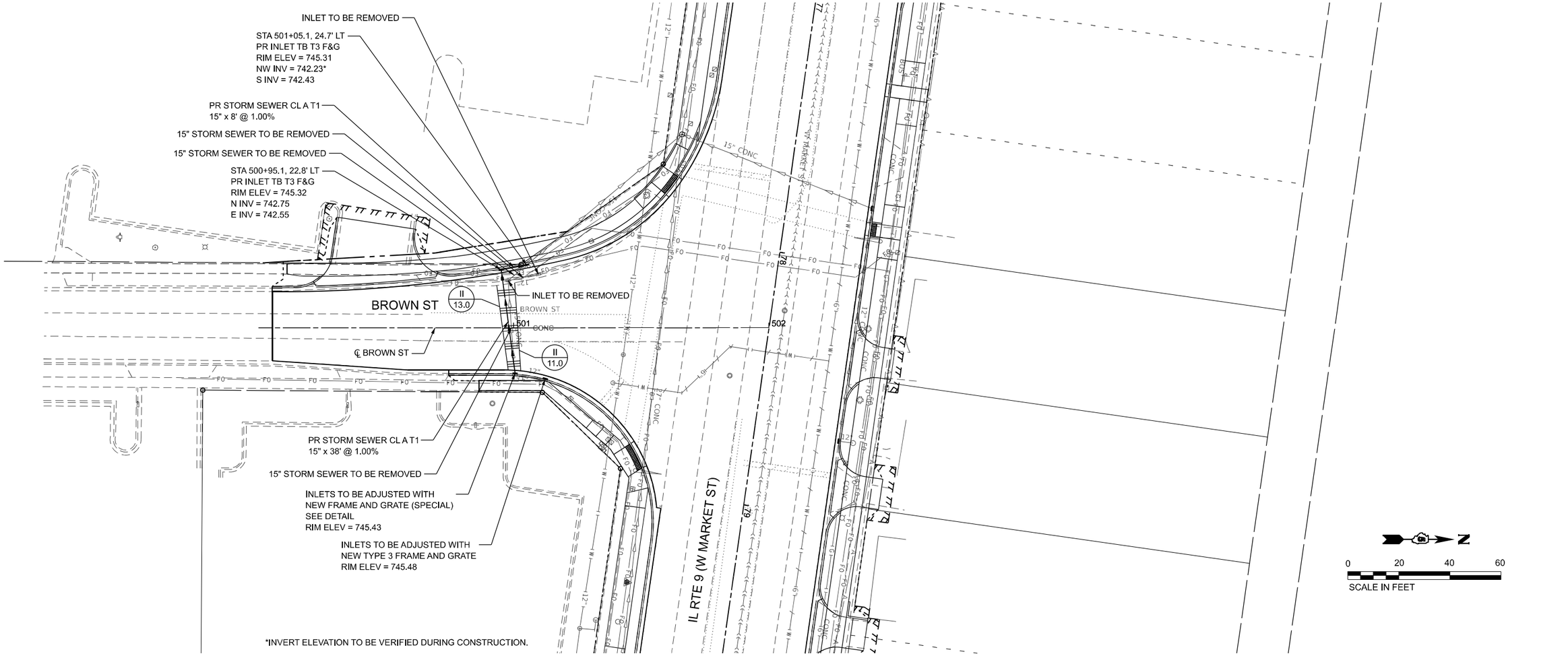

*INVERT ELEVATION TO BE VERIFIED DURING CONSTRUCTION.

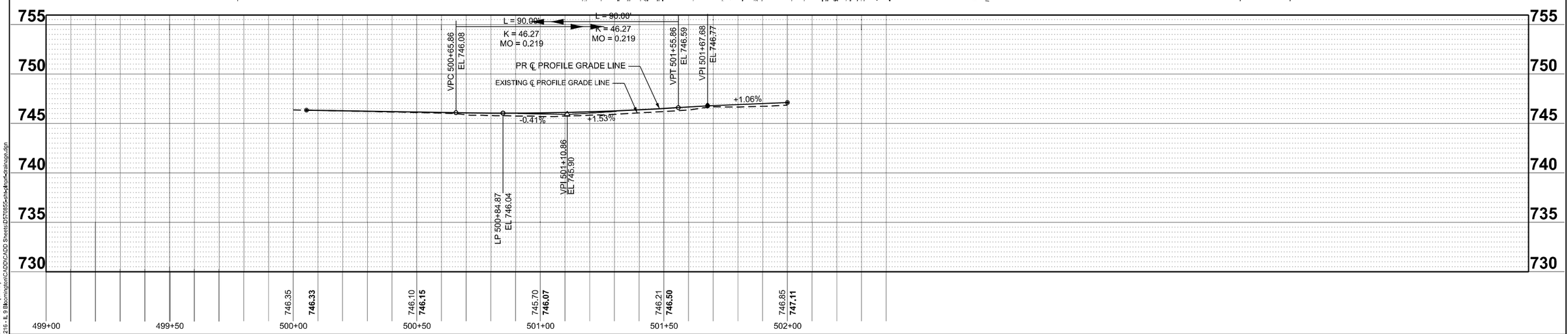

MODEL: EX_BROWN - Plan 1 [Sheet]
FILE NAME: V:\4216-IL 9 Bloomington\CADD\CADD Sheets\D570855-sht-prof-drainage.dgn

Hutchison Engineering, Inc.	USER NAME = BDeCraene	DESIGNED -	REVISED -	STATE OF ILLINOIS DEPARTMENT OF TRANSPORTATION	FAP 693 (IL RTE 9) BROWN ST DRAINAGE & UTILITY PLAN AND PROFILE
		DRAWN -	REVISED -		
	PLOT SCALE = 0.16666633 ' / in.	CHECKED -	REVISED -		
	PLOT DATE = 10/17/2023	DATE -	REVISED -		SCALE: H=20 V=5 | SHEET 8 OF 11 SHEETS | STA. 60+00 R2 TO STA. 66+00 R2

F.A.P. RTE.	SECTION	COUNTY	TOTAL SHEETS	SHEET NO.
693	(129)RS-4	McLEAN	218	70
		CONTRACT NO. 70855		
	ILLINOIS FED. AID PROJECT			

*INVERT ELEVATION TO BE VERIFIED DURING CONSTRUCTION.

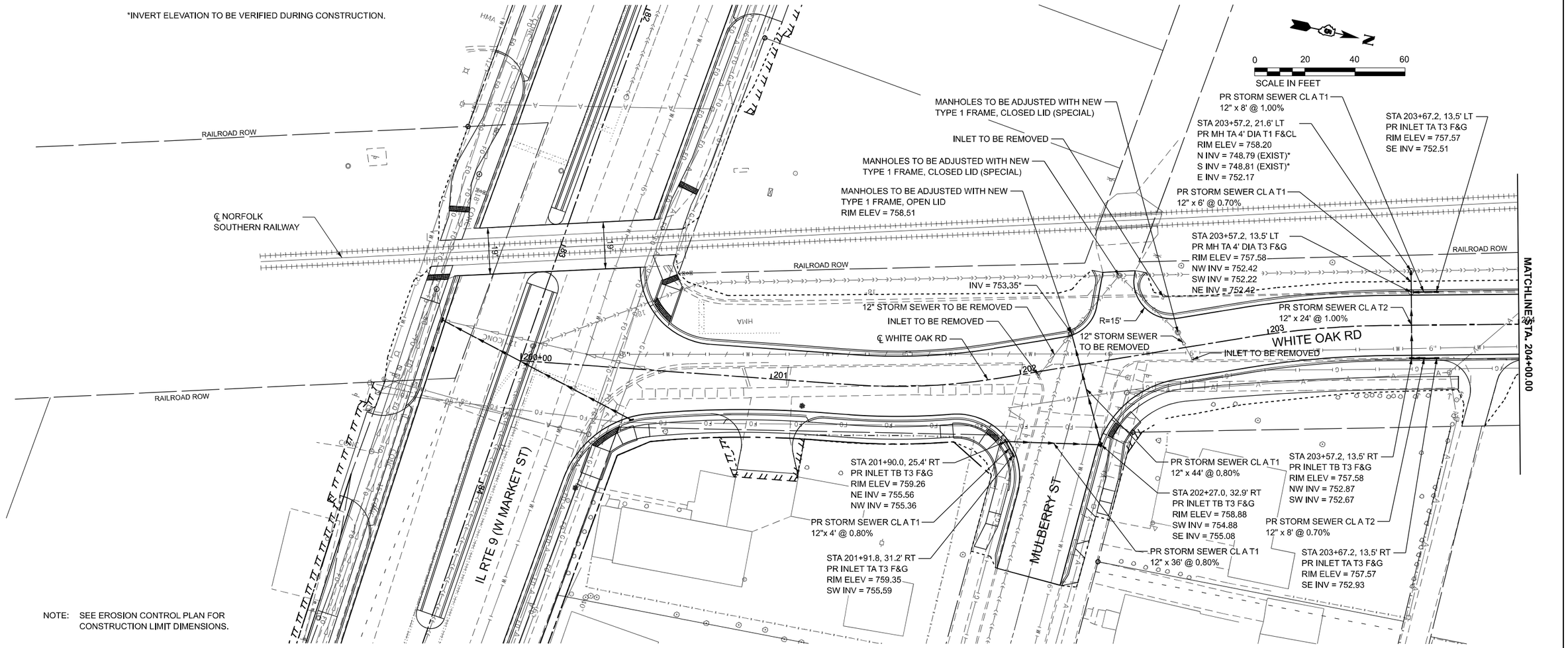

NOTE: SEE EROSION CONTROL PLAN FOR CONSTRUCTION LIMIT DIMENSIONS.

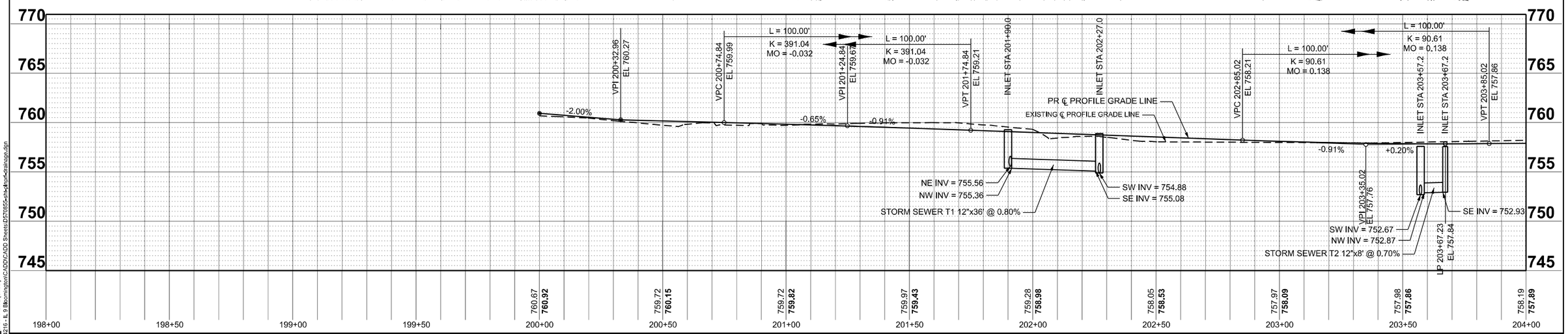

MODEL: WHITE_OAK - Plan 2 [Sheet]
FILE NAME: V:\4216 - IL 9 Bloomington\CADD\CADD Sheets\D570855-sht-plnprf-drainage.dgn

Hutchison Engineering, Inc.	USER NAME = BDeCraene	DESIGNED -	REVISED - 11/16/2023
		DRAWN -	REVISED -
	PLOT SCALE = 0.16666633 ' / in.	CHECKED -	REVISED -
	PLOT DATE = 11/17/2023	DATE -	REVISED -

STATE OF ILLINOIS
DEPARTMENT OF TRANSPORTATION

FAP 693 (IL RTE 9)
WHITE OAK RD DRAINAGE & UTILITY PLAN AND PROFILE

SCALE: H=20 V=5 | SHEET 9 OF 11 SHEETS | STA. 200+00 TO STA. 204+00

F.A.P. RTE.	SECTION	COUNTY	TOTAL SHEETS	SHEET NO.
693	(129)RS-4	McLEAN	218	71
		CONTRACT NO. 70855		
		ILLINOIS	FED. AID PROJECT	

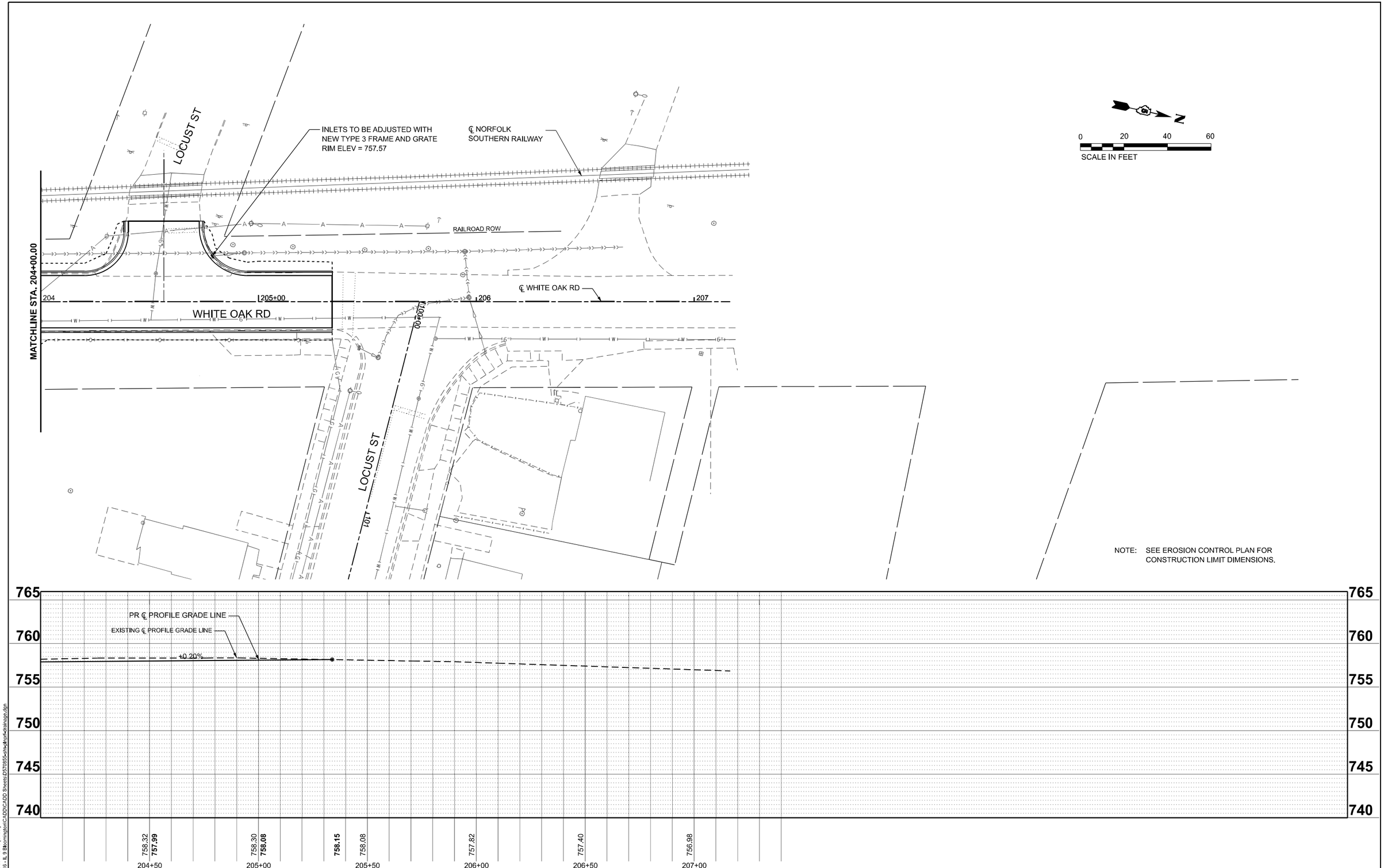

MODEL: WHITE_OAK - Plan 3 [Sheet]
FILE NAME: V:\4216 - IL 9 Bloomington\CADD\CADD Sheets\D570855-sht-plnprf-drainage.dgn

Hutchison Engineering, Inc.	USER NAME = BDeCraene	DESIGNED -	REVISED - 11/16/2023
		DRAWN -	REVISED -
	PLOT SCALE = 0.16666633 ' / in.	CHECKED -	REVISED -
	PLOT DATE = 11/17/2023	DATE -	REVISED -

STATE OF ILLINOIS
DEPARTMENT OF TRANSPORTATION

FAP 693 (IL RTE 9)
WHITE OAK RD DRAINAGE & UTILITY PLAN AND PROFILE

SCALE: H=20 V=5 | SHEET 10 OF 11 SHEETS | STA. 204+00 TO STA. 207+16.55

F.A.P. RTE.	SECTION	COUNTY	TOTAL SHEETS	SHEET NO.
693	(129)RS-4	McLEAN	218	72
		CONTRACT NO. 70855		
		ILLINOIS	FED. AID PROJECT	

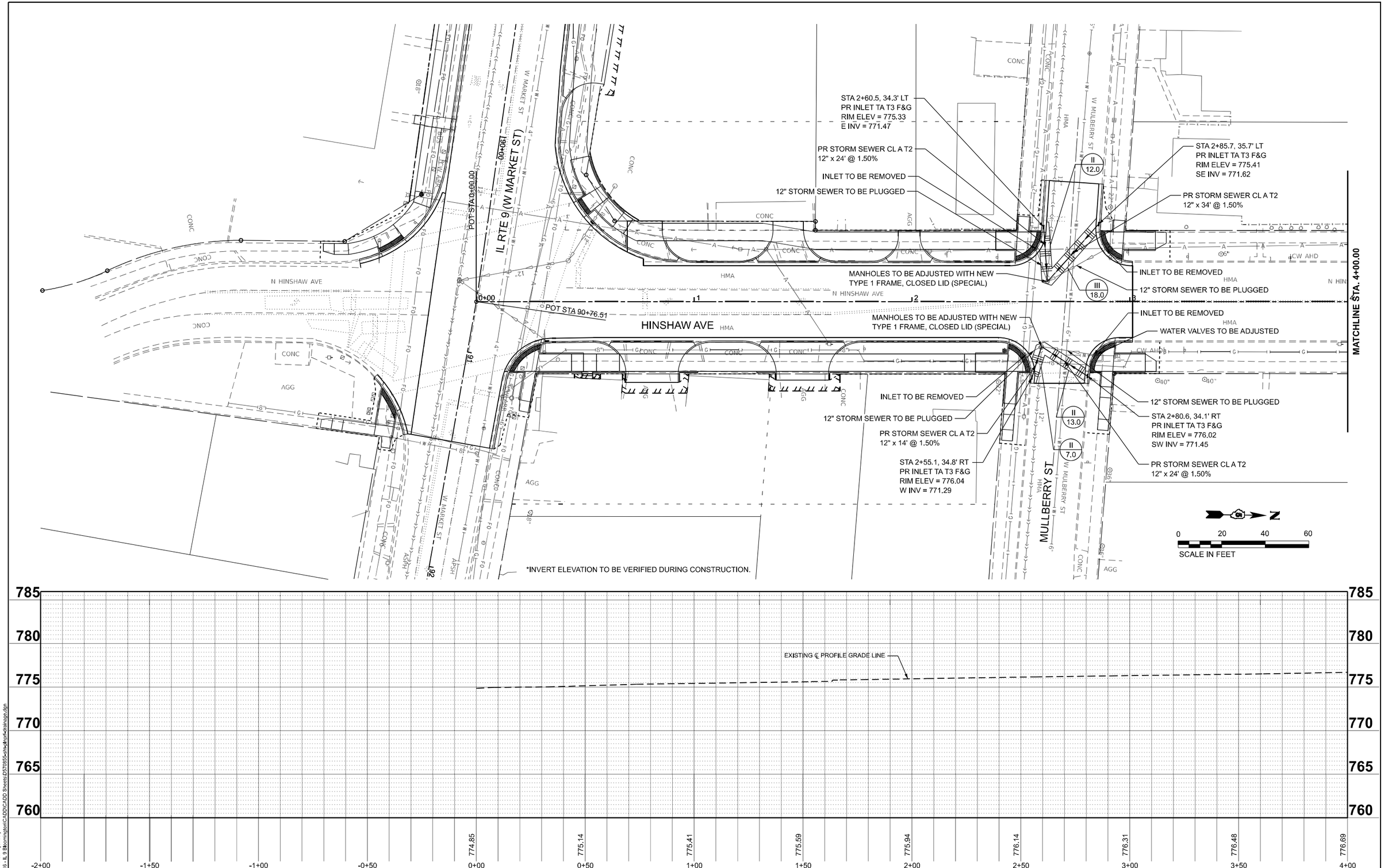

MODEL: HINSHAW - Plan 4 [Sheet]
FILE NAME: V:\4216 - IL 9 Bloomington\CADD\CADD Sheets\D570855-sht-plnprf-drainage.dgn

Hutchison Engineering, Inc.	USER NAME = BDeCraene	DESIGNED -	REVISED -
		DRAWN -	REVISED -
	PLOT SCALE = 0.16666633 ' / in.	CHECKED -	REVISED -
	PLOT DATE = 10/17/2023	DATE -	REVISED -

STATE OF ILLINOIS
DEPARTMENT OF TRANSPORTATION

FAP 693 (IL RTE 9)
W MARKET ST DRAINAGE & UTILITY PLAN AND PROFILE

SCALE: H=20 V=5 | SHEET 11 OF 11 SHEETS | STA. 0+00 TO STA. 4+00

F.A.P. RTE.	SECTION	COUNTY	TOTAL SHEETS	SHEET NO.
693	(129)RS-4	McLEAN	218	73
		CONTRACT NO. 70855		
		ILLINOIS	FED. AID PROJECT	

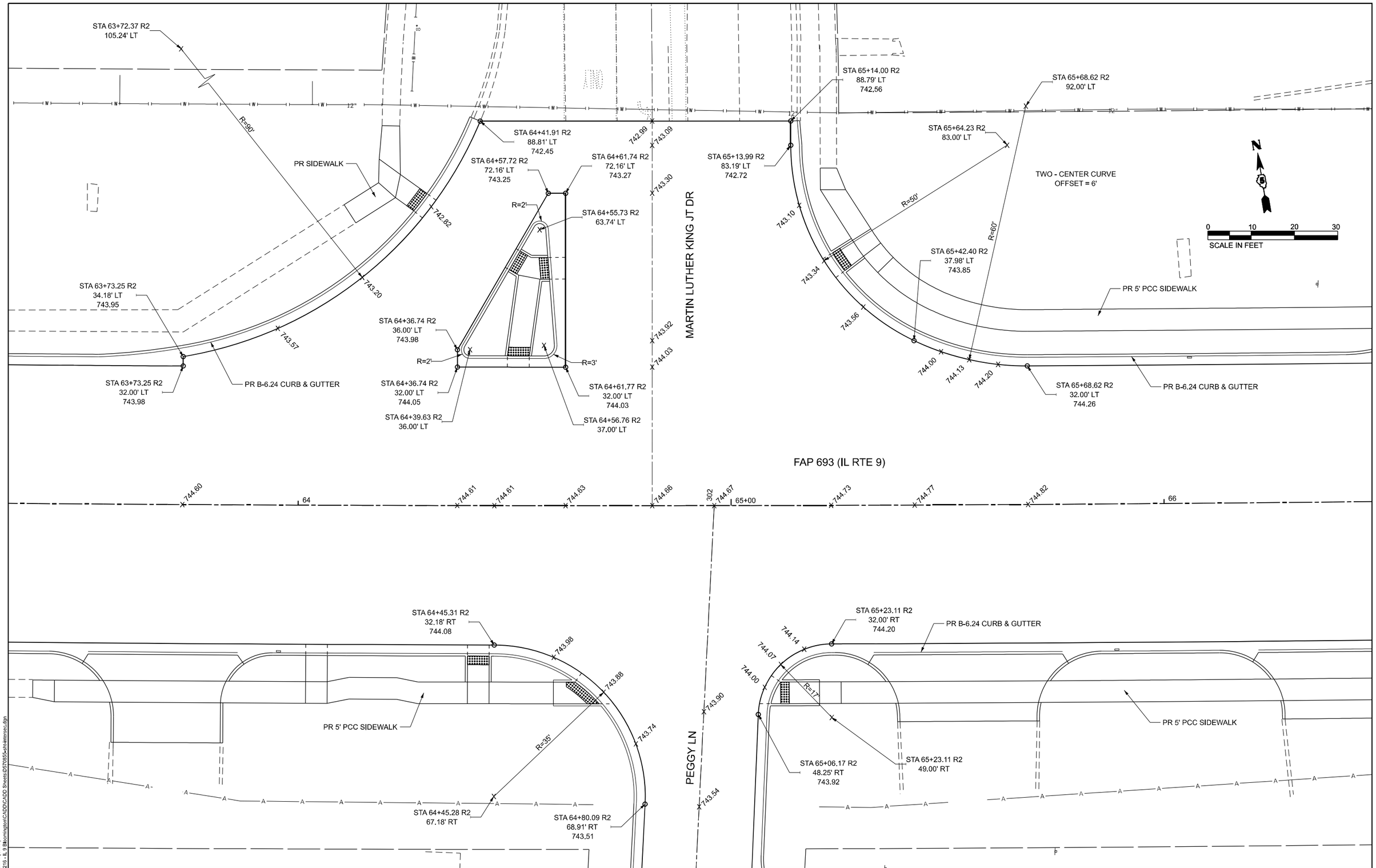

MODEL: intersection 1 [Sheet]
FILE NAME: V:\4216 - IL 9 Bloomington\CADD\CADD Sheets\D570855-sht-intersec.dgn

USER NAME = BDeCraene	DESIGNED -	REVISED -	
	DRAWN -	REVISED -	
PLOT SCALE = 0.16666633 ' / In.	CHECKED -	REVISED -	
PLOT DATE = 10/17/2023	DATE -	REVISED -	

Hutchison Engineering, Inc.

STATE OF ILLINOIS
DEPARTMENT OF TRANSPORTATION

FAP 693 (IL RTE 9)
W MARKET ST & MARTIN LUTHER KING JR DR INTERSECTION DETAILS

SCALE: 1"=10' | SHEET 1 OF 8 SHEETS | STA. | TO STA.

F.A.P. RTE.	SECTION	COUNTY	TOTAL SHEETS	SHEET NO.
693	(129)RS-4	McLEAN	218	74
		CONTRACT NO. 70855		
	ILLINOIS FED. AID PROJECT			

FAP 693 (IL RTE 9)

CAROLINE ST

71 744.44 | 72 744.32 | 403 | 73 744.51 | 744.58 744.59 | 74

STA 71+30.17 R3
32.00' RT
744.14

PR B-6.18 CURB & GUTTER

743.96

743.73

PR 5' PCC SIDEWALK

743.30

R=86'

STA 71+30.17 R3
118.00' RT

TWO - CENTER CURVE
OFFSET = 8.25'

STA 72+16.63 R3
93.43' RT
742.93

743.29

402

742.89

743.16

743.15

742.93

R=450'

742.97

STA 67+65.41 R2
194.79' RT

STA 72+36.39 R3
177.57' RT
743.00

STA 72+36.59 R3
178.98' RT
743.01

743.26
743.27

STA 72+70.61 R4
174.63' RT
742.95

STA 73+31.86 R4
34.20' RT
744.10

STA 73+34.31 R4
32.00' RT
744.15

STA 73+34.31 R4
33.62' RT
744.12

STA 73+13.74 R4
40.62' RT
743.94

743.98

744.02

744.06

PR 8' PCC SIDEWALK

743.57

PR B-6.18 CURB & GUTTER

742.97

742.66

R=89.5'

R=95'

THREE - CENTER CURVE
OFFSET 1 = 2'
OFFSET 2 = 1'

STA 72+65.17 R4
115.97' RT
742.69

742.72
742.74
742.76

R=75'

STA 72+65.57 R4
128.21' RT
742.78

STA 73+36.40 R4
120.64' RT

STA 73+50.13 R4
121.81' RT

STA 73+52.29 R4
126.82' RT

N

0 10 20 30
SCALE IN FEET

MODEL: Intersection 2 [Sheet]
FILE NAME: V:\4216 - IL 9 Bloomington\CADD\CADD Sheets\D570855-sht-intersec.dgn

Hutchison Engineering, Inc.

USER NAME = BDeCraene	DESIGNED -	REVISED -
	DRAWN -	REVISED -
PLOT SCALE = 0.16666633 ' / In.	CHECKED -	REVISED -
PLOT DATE = 10/17/2023	DATE -	REVISED -

STATE OF ILLINOIS
DEPARTMENT OF TRANSPORTATION

FAP 693 (IL RTE 9)
W MARKET ST & CAROLINE ST INTERSECTION DETAILS

SCALE: 1"=10' | SHEET 2 OF 8 SHEETS | STA. | TO STA.

F.A.P. RTE.	SECTION	COUNTY	TOTAL SHEETS	SHEET NO.
693	(129)RS-4	McLEAN	218	75
		CONTRACT NO. 70855		
	ILLINOIS FED. AID PROJECT			

FAP 693 (IL RTE 9)

L 77 — 746.56 — 746.82 — L 78 — 502 — 747.11 — 747.90 — L 79 — 748.09

STA 77+34.73 R5
32.00' RT
746.15

PR B-6.18 CURB & GUTTER

746.15 — 746.16 — 746.17

STA 77+79.47 R5
43.00' RT
746.14

746.05 — 745.91 — 745.71

PR 8' PCC SIDEWALK

W — W — 12"

R=96.5'

R=75'

STA 78+14.73 R5
82.62' RT
745.53

746.18

501

746.06

745.45

BROWN ST

745.66

746.11

745.87

746.32

STA 78+42.80 R5
190.84' RT
746.08

THREE - CENTER CURVE
OFFSET 1 = 11'
OFFSET 2 = 12.5'

STA 77+44.69 R5
109.45' RT

STA 77+34.73 R5
128.50' RT

R=500'

STA 73+65.92 R4
267.75' RT

STA 79+05.84 R5
32.00' RT
747.60

STA 79+05.84 R5
33.68' RT
747.55

PR B-6.18 CURB & GUTTER

STA 78+91.87 R5
38.85' RT
747.29

747.35 — 747.42 — 747.48

746.86

STA 79+05.65 R5
33.72' RT
747.55

W — W — R=54' — W — W — 12" — W — W

746.20

PR 8' PCC SIDEWALK

R=60'

745.61

STA 79+17.43 R5
86.42' RT

STA 79+20.27 R5
91.71' RT

TWO - CENTER CURVE
OFFSET = 2'

STA 78+60.88 R5
100.18' RT
745.55

STA 78+66.26 R5
137.89' RT
745.82

MBR BLOOMINGTON/NORMAL
PROPERTY, LLC

N

0 — 10 — 20 — 30
SCALE IN FEET

MODEL: Intersection 3 [Sheet]
FILE NAME: V:\4216 - IL 9 Bloomington\CADD\CADD Sheets\D570855-sht-Intersec.dgn

USER NAME = BDeCraene	DESIGNED -	REVISED -	
	DRAWN -	REVISED -	
PLOT SCALE = 0.16666633 ' / In.	CHECKED -	REVISED -	
PLOT DATE = 10/17/2023	DATE -	REVISED -	

Hutchison Engineering, Inc.

STATE OF ILLINOIS
DEPARTMENT OF TRANSPORTATION

FAP 693 (IL RTE 9)
W MARKET ST & BROWN ST INTERSECTION DETAILS

SCALE: 1"=10' | SHEET 3 OF 8 SHEETS | STA. | TO STA.

F.A.P. RTE.	SECTION	COUNTY	TOTAL SHEETS	SHEET NO.
693	(129)RS-4	McLEAN	218	76
		CONTRACT NO. 70855		
	ILLINOIS FED. AID PROJECT			

NOTES: SEE MEDIAN DETAILS FOR ADDITIONAL MEDIAN INFORMATION.

HMA SIDEWALK DEPTH WILL BE 5".

PROPOSED RAILROAD SIGNALS AND GATES TO BE CONSTRUCTED BY OTHERS.

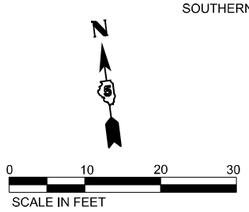

℄ NORFOLK SOUTHERN RAILWAY

RAILROAD ROW

WHITE OAK RD

201

PR 5' PCC SIDEWALK

STA 87+16.29 R5
220.85' LT

STA 83+29.92 R5
117.32' LT
759.51

R=400'

TWO - CENTER CURVE
OFFSET = 5.5'

STA 83+88.74 R5
71.49' LT

STA 83+52.34 R5
54.89' LT
760.22

R=40'

STA 83+17.98 R5
69.16' LT
759.81

STA 82+89.00 R5
61.40' LT

PR 8' HMA SIDEWALK | PR 8' PCC SIDEWALK

STA 82+98.09 R5
32.80' LT
760.09

R=30'

759.69
759.67
759.83
759.99
760.01
760.14
759.88
759.95
760.02
760.39
760.57
760.77

STA 83+88.05 R5
31.49' LT
760.98

PR 8' PCC SIDEWALK

PR B-6.18 CURB & GUTTER

PR 8' PCC SIDEWALK | PR 8' HMA SIDEWALK

PR 8' PCC SIDEWALK

PR B-6.18 CURB & GUTTER

FAP 693 (IL RTE 9)

CROSSING LENGTH = 96'

760.68
760.58
760.88
761.47

82

83

84

70'

72'

RAILROAD ROW

PR 8' HMA SIDEWALK | PR 8' PCC SIDEWALK

PR 8' PCC SIDEWALK | PR 8' HMA SIDEWALK

RAILROAD ROW

MODEL: intersection 4 [Sheet]
FILE NAME: V:\4216 - IL 9 Bloomington\CADD\C/ADD Sheets\D570855-sht-intersec-.dgn

Hutchison Engineering, Inc.	USER NAME = BDeCraene	DESIGNED -	REVISED - 11/16/2023	
		DRAWN -	REVISED - 12/06/2023	
	PLOT SCALE = 0.16666633 ' / In.	CHECKED -	REVISED -	
	PLOT DATE = 12/6/2023	DATE -	REVISED -	

STATE OF ILLINOIS
DEPARTMENT OF TRANSPORTATION

FAP 693 (IL RTE 9)
W MARKET ST & WHITE OAK RD INTERSECTION DETAILS

SCALE: 1"=10' | SHEET 4 OF 8 SHEETS | STA. | TO STA.

F.A.P. RTE.	SECTION	COUNTY	TOTAL SHEETS	SHEET NO.
693	(129)RS-4	McLEAN	218	77
		CONTRACT NO. 70855		
	ILLINOIS FED. AID PROJECT			

FAP 693 (IL RTE 9)

84

85+00

86

764.07

765.12

766.17

STA 84+85.59 R5
30.57' RT
763.58

PR B-6.18 CURB & GUTTER

PR 8' PCC SIDEWALK

763.81

764.05

764.31

R=33.5'

STA 84+86.30 R5
64.06' RT

765.25

765.40

STA 85+19.69 R5
61.37' RT
764.73

STILLWELL ST

CLINT &
DIANE NORD

STA 85+23.69 R5
110.92' RT
766.10

STA 85+73.69 R5
27.50' RT
765.89

STA 85+73.71 R5
28.30' RT
765.88

PR B-6.18 CURB & GUTTER

PR SIDEWALK

765.62

765.48

765.54

R=36.5'

STA 85+79.91 R5
64.27' RT

STA 85+43.60 R5
67.93' RT
765.62

STA 85+46.91 R5
109.05' RT
765.86

N

0 10 20 30
SCALE IN FEET

MODEL: Intersection 5 [Sheet]
FILE NAME: V:\4216-IL 9 Bloomington\CADD\CADD Sheets\D570855-sht-intersec.dgn

Hutchison Engineering, Inc.

USER NAME = BDeCraene	DESIGNED -	REVISED -	
	DRAWN -	REVISED -	
PLOT SCALE = 0.16666633 ' / in.	CHECKED -	REVISED -	
PLOT DATE = 10/17/2023	DATE -	REVISED -	

STATE OF ILLINOIS
DEPARTMENT OF TRANSPORTATION

FAP 693 (IL RTE 9)
W MARKET ST & STILLWELL ST INTERSECTION DETAILS

SCALE: 1"=10' | SHEET 5 OF 8 SHEETS | STA. | TO STA.

F.A.P. RTE.	SECTION	COUNTY	TOTAL SHEETS	SHEET NO.
693	(129)RS-4	McLEAN	218	78
		CONTRACT NO. 70855		
	ILLINOIS FED. AID PROJECT			

N

0 10 20 30
SCALE IN FEET

STA 89+87.21 R5
84.21' LT

STA 90+49.34 R5
73.56' LT
775.01

STA 90+46.17 R5
73.10' LT
774.98

R=60'

774.94

774.89

774.81

PR 8' PCC SIDEWALK

PR B-6.18 CURB & GUTTER

STA 89+36.86 R5
22.00' LT
773.97

STA 89+65.74 R5
23.10' LT
774.33

STA 90+00.13 R5
25.62' LT
774.68

HINSHAW AVE

775.07

775.02

STA 90+86.88
37.29' LT
774.86

PR 8' PCC SIDEWALK

STA 91+10.02
41.41' LT

R=23.5'

774.78

774.71

774.61

STA 91+09.84
17.91' LT
774.43

PR B-6.18 CURB & GUTTER

FAP 693 (IL RTE 9)

89

90+00

91

0+00

772.07 772.50 773.41 774.13 774.53 774.79 774.88 774.50 773.55

STA 91+41.70
18.85' RT
773.37

STA 91+41.79
20.32' RT
773.35

STA 88+42.49 R5
22.14' RT
771.40

STA 89+01.30 R5
21.00' RT
772.96

PR B-6.18 CURB & GUTTER

PR 8' PCC SIDEWALK

STA 90+29.33 R5
21.00' RT
774.66

STA 90+29.02 R5
22.44' RT
774.65

771.48 771.55 771.63 772.07 772.31 772.58 772.42 774.65 773.97 773.31

773.45 773.40 773.16

PR B-6.18 CURB & GUTTER

STA 88+54.21 R5
33.41' RT
771.71

R=11.5'

HOLTON DR

STA 88+68.93 R5
45.88' RT
772.51

R=23.5'

R=6.5'

772.28 772.40 772.53 772.55 772.52

STA 91+17.48
38.92' RT
772.86

R=55'

PR 5' PCC SIDEWALK

STA 88+75.22 R5
47.50' RT

STA 89+01.30 R5
54.50' RT

STA 88+54.62 R5
54.00' RT
772.32

STA 88+75.21 R5
54.00' RT
772.49

STA 88+42.71 R5
33.64' RT

R=51.5'

STA 90+66.71 R5
55.28' RT
772.81

HINSHAW AVE

STA 91+61.73
71.57' RT

STA 90+18.28 R5
72.81' RT

MODEL: intersection 6 [Sheet]
FILE NAME: V:\4216 - IL 9 Bloomington\CADD\C/ADD Sheets\D570855-sht-intersec-6.dgn

Hutchison Engineering, Inc.

USER NAME = BDeCraene	DESIGNED -	REVISED -	
	DRAWN -	REVISED -	
PLOT SCALE = 0.16666633 ' / In.	CHECKED -	REVISED -	
PLOT DATE = 10/17/2023	DATE -	REVISED -	

STATE OF ILLINOIS
DEPARTMENT OF TRANSPORTATION

FAP 693 (IL RTE 9)
W MARKET ST & HINSHAW AVE INTERSECTION DETAILS

SCALE: 1"=10' | SHEET 6 OF 8 SHEETS | STA. | TO STA.

F.A.P. RTE.	SECTION	COUNTY	TOTAL SHEETS	SHEET NO.
693	(129)RS-4	McLEAN	218	79
		CONTRACT NO. 70855		
	ILLINOIS FED. AID PROJECT			

N

0 10 20 30

SCALE IN FEET

PR B-6.18 CURB & GUTTER

PR 5' PCC SIDEWALK

PR B-6.18 CURB & GUTTER

203

WHITE OAK RD

STA 202+65.34
12.00' LT
758.21

STA 202+65.34
27.00' LT

STA 202+51.21
32.03' LT
758.08

STA 202+51.72
33.47' LT
758.07

R=15'

758.39
758.43
758.44
758.64
758.83
758.68
758.75
758.80
758.18
758.15
758.11
758.18
758.36
758.48
758.53
758.57

STA 202+60.95
12.00' RT
758.25

STA 202+60.95
52.00' RT

R=40'

STA 202+24.53
35.47' RT
759.03

STA 202+01.84
85.46' RT
760.57

759.89
759.07
761.08

MULBERRY ST

STA 202+38.91
34.91' LT
758.29

STA 202+34.30
21.97' LT
758.43

STA 202+20.17
27.00' LT

STA 202+20.17
12.00' LT
758.62

202

759.49
759.33
759.20
759.25

R=25'

STA 201+91.06
46.40' RT
759.70

STA 201+81.19
74.98' RT
760.41

STA 201+71.20
37.00' RT

STA 201+71.20
12.00' RT
759.07

PR B-6.18 CURB & GUTTER

PR B-6.18 CURB & GUTTER

PR 5' PCC SIDEWALK

MODEL: intersection 7 [Sheet]
FILE NAME: V:\4216 - IL 9 Bloomington\CADD\CADD Sheets\D570855-sht-intersec.dgn

Hutchison Engineering, Inc.

USER NAME = BDeCraene	DESIGNED -	REVISED -	
	DRAWN -	REVISED -	
PLOT SCALE = 0.16666633 ' / In.	CHECKED -	REVISED -	
PLOT DATE = 10/17/2023	DATE -	REVISED -	

STATE OF ILLINOIS
DEPARTMENT OF TRANSPORTATION

FAP 693 (IL RTE 9)
WHITE OAK RD & MULBERRY ST INTERSECTION DETAILS

SCALE: 1"=10' | SHEET 7 OF 8 SHEETS | STA. | TO STA.

F.A.P. RTE.	SECTION	COUNTY	TOTAL SHEETS	SHEET NO.
693	(129)RS-4	McLEAN	218	80
		CONTRACT NO. 70855		
	ILLINOIS	FED. AID PROJECT		

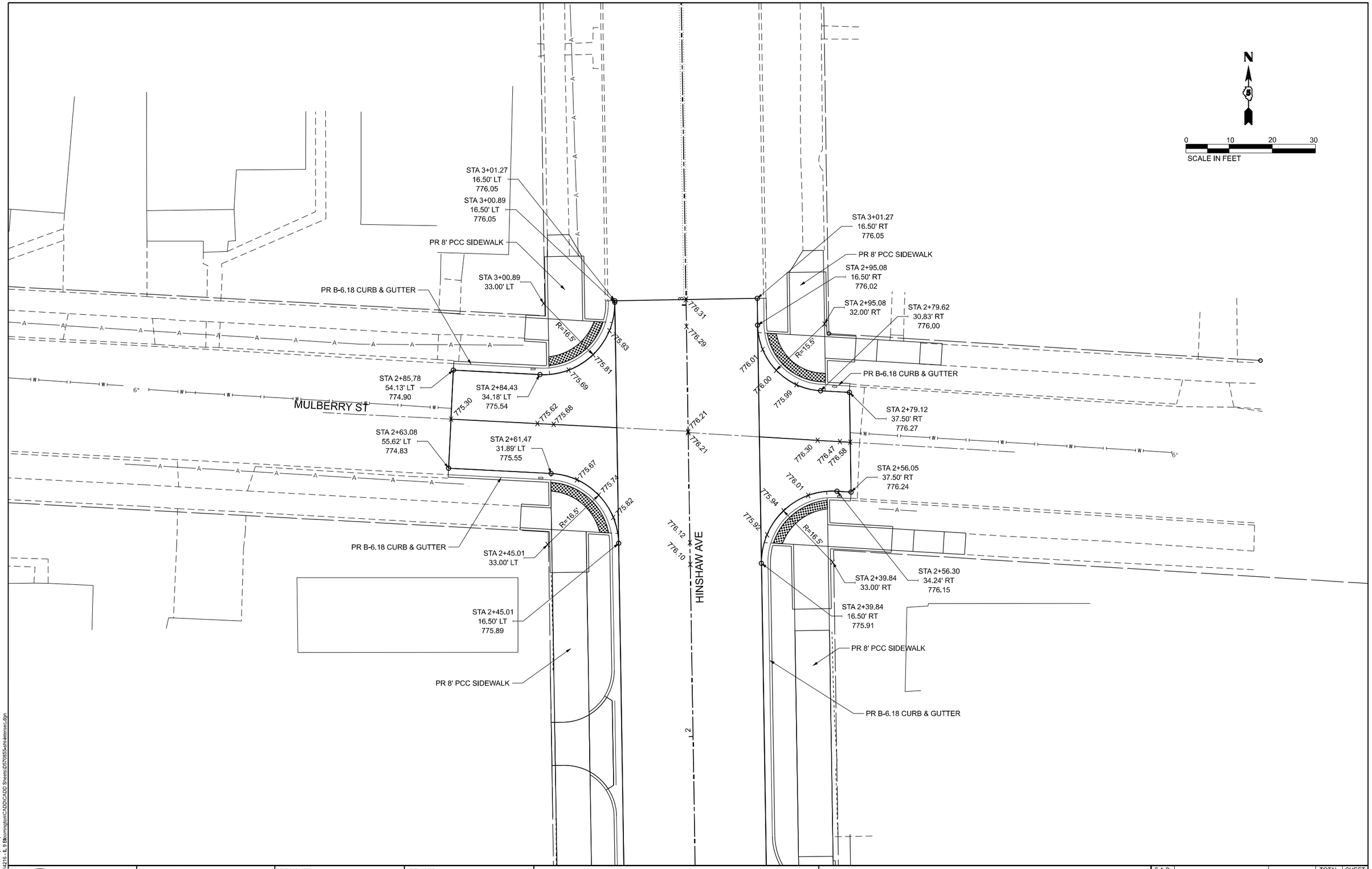

MODEL: intersection 9 [Sheet]
FILE NAME: V:\4216 - IL 9 Bloomington\CADD\C/ADD Sheets\D570855-sht-intersec.dgn

USER NAME = BDeCraene	DESIGNED -	REVISED -	
	DRAWN -	REVISED -	
PLOT SCALE = 0.16666633 ' / In.	CHECKED -	REVISED -	
PLOT DATE = 10/17/2023	DATE -	REVISED -	

Hutchison Engineering, Inc.

STATE OF ILLINOIS
DEPARTMENT OF TRANSPORTATION

FAP 693 (IL RTE 9)
HINSHAW AVE & MULBERRY ST INTERSECTION DETAILS

SCALE: 1"=10' | SHEET 8 OF 8 SHEETS | STA. | TO STA.

F.A.P. RTE.	SECTION	COUNTY	TOTAL SHEETS	SHEET NO.
693	(129)RS-4	McLEAN	218	81
		CONTRACT NO. 70855		
	ILLINOIS FED. AID PROJECT			

N.W. QUADRANT
IL 9 (W. MARKET ST.) & MARTIN LUTHER KING DR.

N

0 4 8 12
SCALE IN FEET

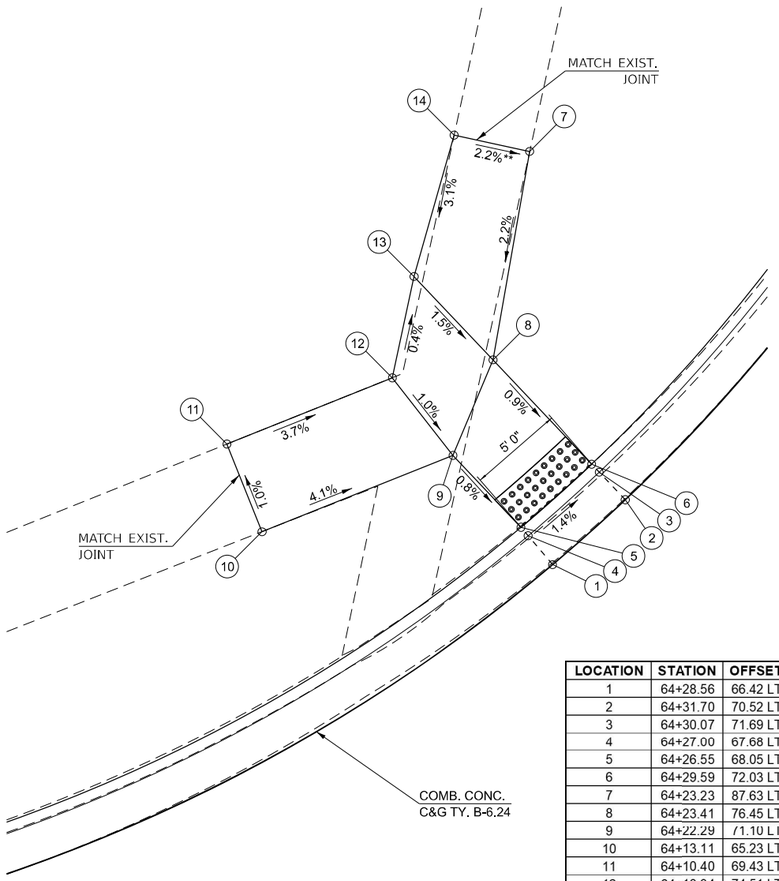

LOCATION	STATION	OFFSET	ELEVATION	
1	64+28.56	66.42 LT	742.88	
2	64+31.70	70.52 LT	742.79	
3	64+30.07	71.69 LT	742.69	
4	64+27.00	67.68 LT	742.78	
5	64+26.55	68.05 LT	742.82	
6	64+29.59	72.03 LT	742.73	
7	64+23.23	87.63 LT	743.04	*
8	64+23.41	76.45 LT	742.80	
9	64+22.29	71.10 LT	742.86	
10	64+13.11	65.23 LT	742.30	*
11	64+10.40	69.43 LT	743.26	*
12	64+18.34	74.51 LT	742.91	
13	64+18.47	79.99 LT	742.89	
14	64+19.14	87.72 LT	743.13	*

*MATCH EXISTING GRADE

**NON-COMPLIANT CROSS SLOPE ON PANEL TRANSITIONING TO EXISTING SIDEWALK

DETECTABLE WARNING

NOTES:

1. EXISTING CONDITIONS MAY VARY SLIGHTLY IN THE FIELD. THE ENGINEER MAY ADJUST GRADES AND TIE IN LOCATIONS AS NECESSARY TO CONSTRUCT RAMPS. ANY ADJUSTMENTS MADE BY THE ENGINEER SHALL MEET ADA REQUIREMENTS FOR CURB RAMPS.
2. MAX. ALLOWABLE RUNNING SLOPE OF RAMP = 1:12 (8.3%)
3. MAX. ALLOWABLE SLOPE OF TURNING SPACE - 1:50 (2%)
4. MIN. ALLOWABLE WIDTH OF RAMP = 4'
5. MAX. ALLOWABLE CROSS SLOPE OF SIDEWALK OR LANDING = 1:50 (2%)
6. SEE INTERSECTION DETAILS FOR ADDITIONAL ROADWAY INFORMATION
7. SEE REMOVAL PLANS FOR MORE INFORMATION ON ADA REMOVAL ITEMS

N.E. QUADRANT
IL 9 (W. MARKET ST.) & MARTIN LUTHER KING DR.

N

0 4 8 12
SCALE IN FEET

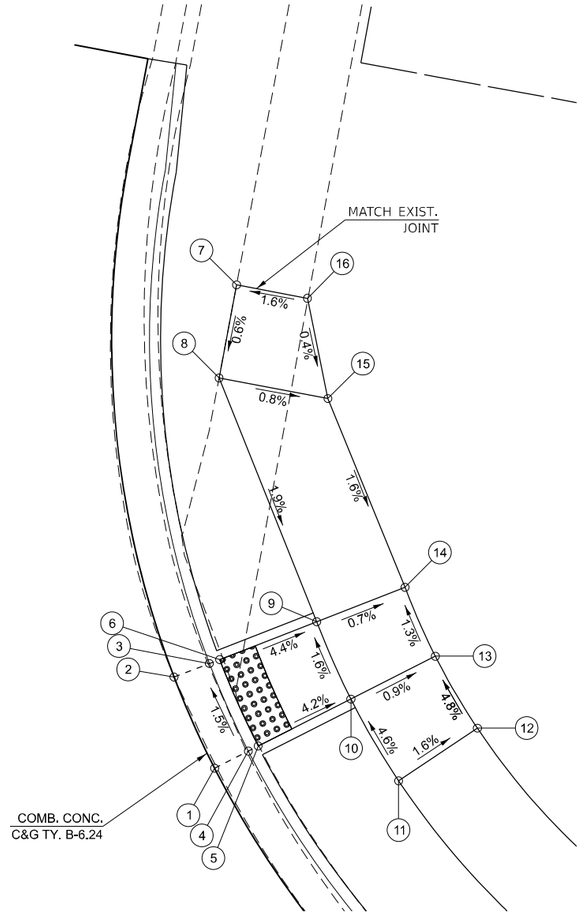

LOCATION	STATION	OFFSET	ELEVATION	
1	65+24.37	52.61 LT	743.41	
2	65+21.38	56.95 LT	743.34	
3	65+23.09	57.99 LT	743.24	
4	65+25.97	53.82 LT	743.31	
5	65+26.43	54.18 LT	743.35	
6	65+23.59	58.30 LT	743.28	
7	65+20.83	77.91 LT	743.23	*
8	65+20.82	72.91 LT	743.26	
9	65+28.28	61.20 LT	743.52	
10	65+30.81	57.51 LT	743.58	
11	65+34.10	53.74 LT	743.81	
12	65+37.57	57.35 LT	743.73	
13	65+34.79	60.55 LT	743.54	
14	65+32.54	63.84 LT	743.49	
15	65+26.69	72.90 LT	743.31	
16	65+24.65	77.90 LT	743.29	*

*MATCH EXISTING GRADE

DETECTABLE WARNING

MODEL: Default
FILE NAME: V:\2216 - IL 9 Bloomington\CADD\CADD Sheets\D570855-sht-detailMartinLutherKing1.dgn

Hutchison Engineering, Inc.

USER NAME = BDeCraene	DESIGNED -	REVISED -
	DRAWN -	REVISED -
PLOT SCALE = 8.000 ' / in.	CHECKED -	REVISED -
PLOT DATE = 10/17/2023	DATE -	REVISED -

STATE OF ILLINOIS
DEPARTMENT OF TRANSPORTATION

IL 9 (W. MARKET ST.) & MARTIN LUTHER KING DR.
RAMP DETAILS

SCALE: 1"=4' | SHEET 1 OF 18 SHEETS | STA. | TO STA.

F.A.P. RTE.	SECTION	COUNTY	TOTAL SHEETS	SHEET NO.
693	(129)RS-4	McLEAN	218	82
		CONTRACT NO. 70855		
	ILLINOIS	FED. AID PROJECT		

N.W. BUS STOP
IL 9 (W. MARKET ST.) & MARTIN LUTHER KING DR.

LOCATION	STATION	OFFSET	ELEVATION	
1	63+18.14	34.58 LT	744.18	
2	63+23.14	34.58 LT	744.18	
3	63+28.20	39.78 LT	744.09	*
4	63+23.19	39.77 LT	744.24	
5	63+18.17	39.76 LT	744.23	
6	63+13.16	39.73 LT	744.13	*
7	63+13.15	44.54 LT	744.04	*
8	63+18.17	44.76 LT	744.26	
9	63+23.18	44.77 LT	744.27	
10	63+28.19	44.63 LT	744.04	*

*MATCH EXISTING GRADE

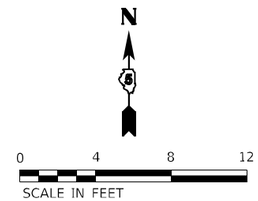

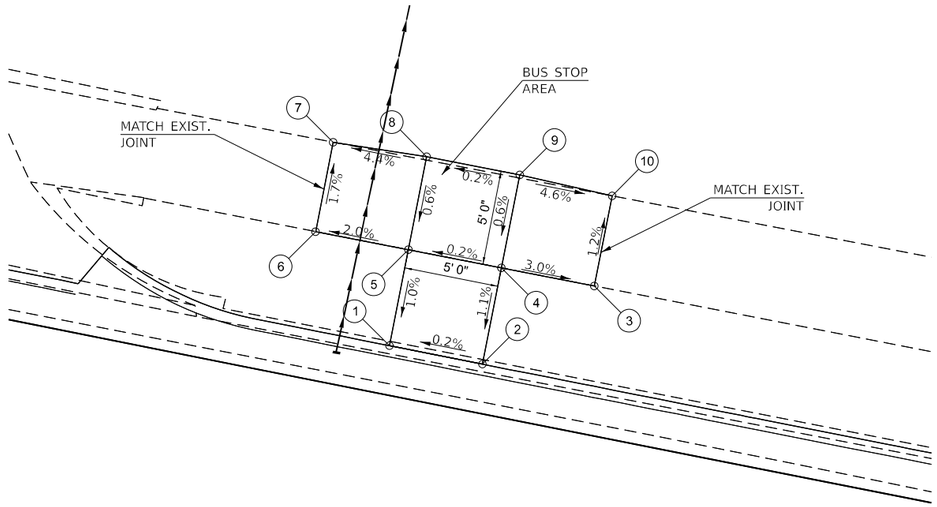

DETECTABLE WARNING

NORTH MEDIAN
IL 9 (W. MARKET ST.) & MARTIN LUTHER KING DR.

LOCATION	STATION	OFFSET	ELEVATION
1	64+48.31	32.00 LT	744.04
2	64+53.36	32.00 LT	744.03
3	64+61.76	52.34 LT	743.58
4	64+61.75	57.34 LT	743.50
5	64+50.28	59.36 LT	743.51
6	64+47.77	55.03 LT	743.60
7	64+48.31	34.00 LT	743.94
8	64+53.36	34.00 LT	743.93
9	64+58.61	52.34 LT	743.48
10	64+58.22	57.34 LT	743.40
11	64+50.72	59.11 LT	743.49
12	64+48.21	54.78 LT	743.58
13	64+48.31	34.58 LT	743.98
14	64+53.36	34.58 LT	743.97
15	64+58.02	52.34 LT	743.52
16	64+57.64	57.34 LT	743.44
17	64+51.23	58.82 LT	743.53
18	64+48.71	54.49 LT	743.62
19	64+55.82	52.34 LT	743.51
20	64+50.88	53.24 LT	743.54

*MATCH EXISTING GRADE

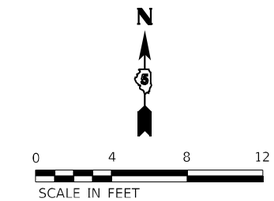

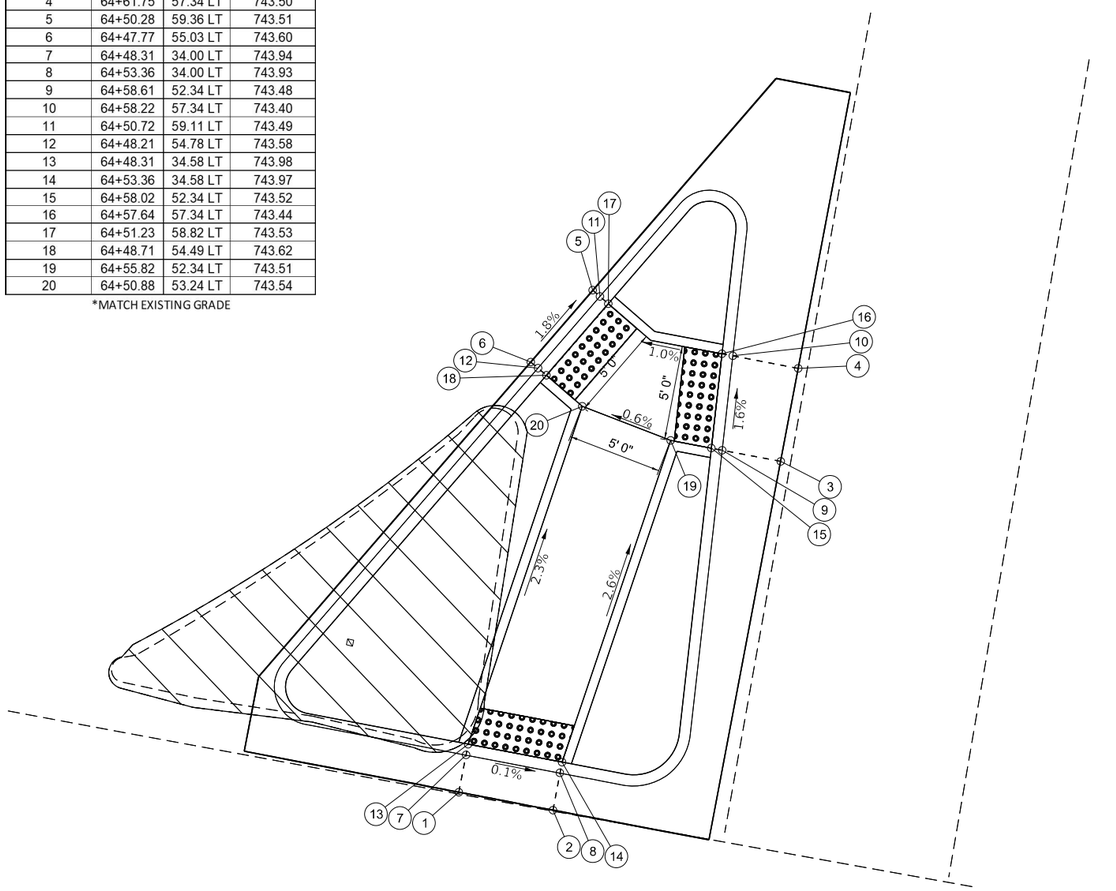

DETECTABLE WARNING

NOTES:

1. EXISTING CONDITIONS MAY VARY SLIGHTLY IN THE FIELD. THE ENGINEER MAY ADJUST GRADES AND TIE IN LOCATIONS AS NECESSARY TO CONSTRUCT RAMPS. ANY ADJUSTMENTS MADE BY THE ENGINEER SHALL MEET ADA REQUIREMENTS FOR CURB RAMPS.
2. MAX. ALLOWABLE RUNNING SLOPE OF RAMP = 1:12 (8.3%)
3. MAX. ALLOWABLE SLOPE OF TURNING SPACE - 1:50 (2%)
4. MIN. ALLOWABLE WIDTH OF RAMP = 4'
5. MAX. ALLOWABLE CROSS SLOPE OF SIDEWALK OR LANDING = 1:50 (2%)
6. SEE INTERSECTION DETAILS FOR ADDITIONAL ROADWAY INFORMATION
7. SEE REMOVAL PLANS FOR MORE INFORMATION ON ADA REMOVAL ITEMS

MODEL: Default
FILE NAME: V:\4216 - IL 9 Bloomington\CADD\CADD Sheets\D570855-sht-detail-MartinLutherKing2.dgn

Hutchison Engineering, Inc.	USER NAME = BDeCraene	DESIGNED -	REVISED -
		DRAWN -	REVISED -
	PLOT SCALE = 8,000 ' / in.	CHECKED -	REVISED -
	PLOT DATE = 10/17/2023	DATE -	REVISED -

STATE OF ILLINOIS
DEPARTMENT OF TRANSPORTATION

IL 9 (W. MARKET ST.) & MARTIN LUTHER KING DR.
RAMP DETAILS

SCALE: 1"=4' | SHEET 2 OF 18 SHEETS | STA. TO STA.

F.A.P. RTE.	SECTION	COUNTY	TOTAL SHEETS	SHEET NO.
693	(129)RS-4	McLEAN	218	83
		CONTRACT NO. 70855		
		ILLINOIS	FED. AID PROJECT	

S.W. QUADRANT
IL 9 (W. MARKET ST.) & PEGGY LN.

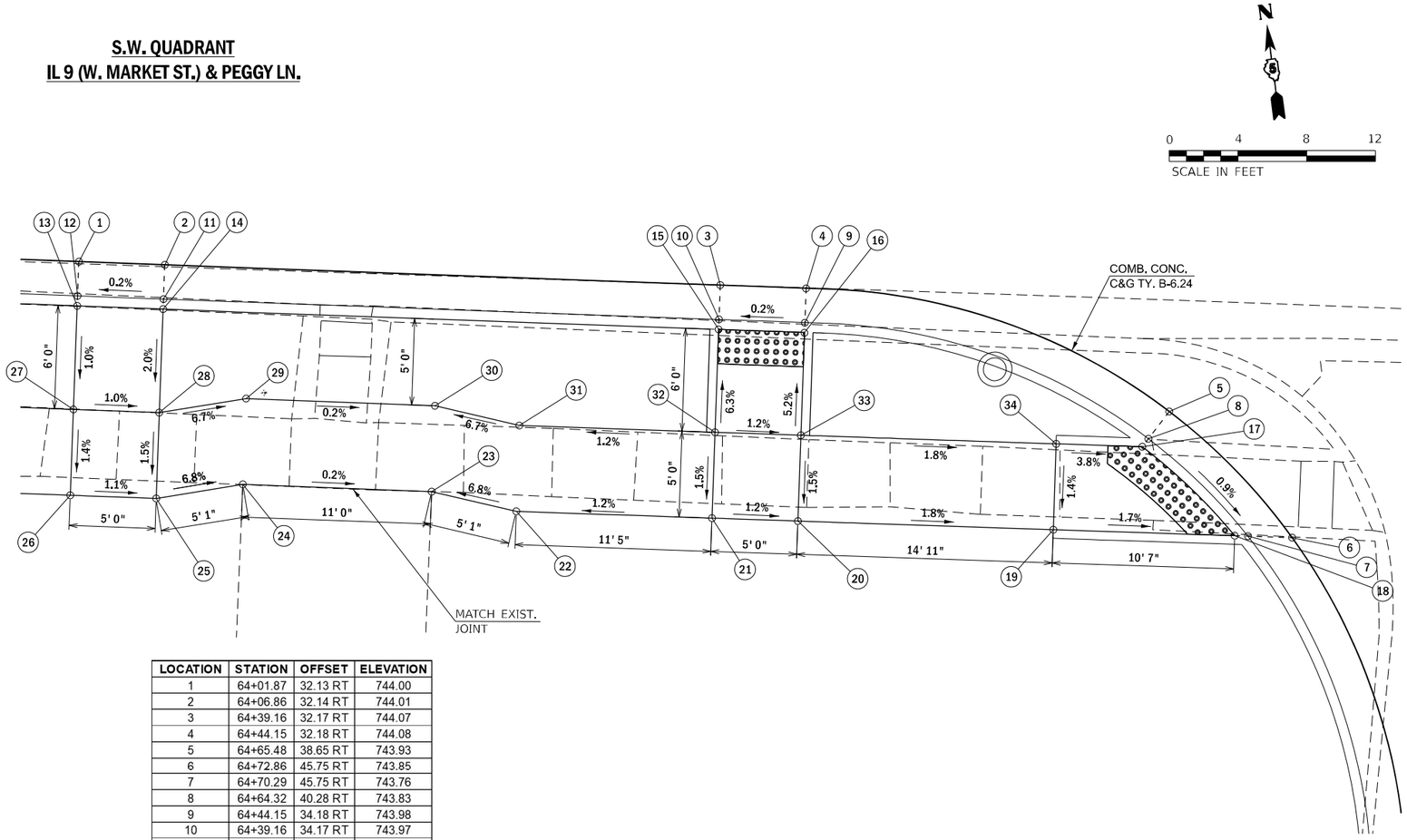

LOCATION	STATION	OFFSET	ELEVATION	
1	64+01.87	32.13 RT	744.00	
2	64+06.86	32.14 RT	744.01	
3	64+39.16	32.17 RT	744.07	
4	64+44.15	32.18 RT	744.08	
5	64+65.48	38.65 RT	743.93	
6	64+72.86	45.75 RT	743.85	
7	64+70.29	45.75 RT	743.76	
8	64+64.32	40.28 RT	743.83	
9	64+44.15	34.18 RT	743.98	
10	64+39.16	34.17 RT	743.97	
11	64+06.86	34.14 RT	743.89	
12	64+01.87	34.13 RT	743.88	
13	64+01.87	34.72 RT	744.38	
14	64+06.86	34.72 RT	744.39	
15	64+39.16	34.76 RT	744.01	
16	64+44.15	34.76 RT	744.02	
17	64+63.98	40.75 RT	743.87	
18	64+69.52	45.75 RT	743.80	
19	64+58.98	45.75 RT	743.99	
20	64+44.15	45.75 RT	744.26	
21	64+39.16	45.75 RT	744.32	
22	64+27.78	45.75 RT	744.18	
23	64+22.83	44.78 RT	743.83	*
24	64+11.86	44.75 RT	743.85	*
25	64+06.86	45.75 RT	744.20	
26	64+01.87	45.75 RT	744.25	
27	64+01.87	40.75 RT	744.32	
28	64+06.86	40.75 RT	744.27	
29	64+11.86	39.75 RT	743.93	
30	64+22.83	39.77 RT	743.91	
31	64+27.78	40.75 RT	744.25	
32	64+39.16	40.75 RT	744.39	
33	64+44.15	40.75 RT	744.33	
34	64+58.98	40.75 RT	744.06	

*MATCH EXISTING GRADE

DETECTABLE WARNING

S.E. QUADRANT
IL 9 (W. MARKET ST.) & PEGGY LN.

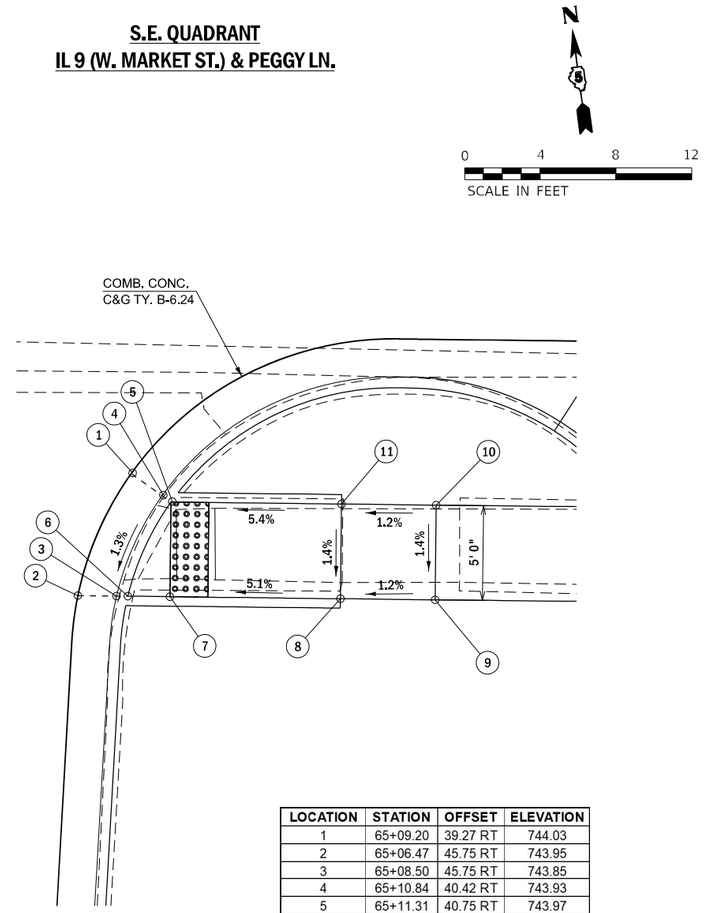

LOCATION	STATION	OFFSET	ELEVATION
1	65+09.20	39.27 RT	744.03
2	65+06.47	45.75 RT	743.95
3	65+08.50	45.75 RT	743.85
4	65+10.84	40.42 RT	743.93
5	65+11.31	40.75 RT	743.97
6	65+09.09	45.75 RT	743.89
7	65+11.31	45.75 RT	743.93
8	65+20.30	45.75 RT	744.39
9	65+25.28	45.75 RT	744.45
10	65+25.28	40.75 RT	744.52
11	65+20.30	40.75 RT	744.46

*MATCH EXISTING GRADE

DETECTABLE WARNING

NOTES:

1. EXISTING CONDITIONS MAY VARY SLIGHTLY IN THE FIELD. THE ENGINEER MAY ADJUST GRADES AND TIE IN LOCATIONS AS NECESSARY TO CONSTRUCT RAMPS. ANY ADJUSTMENTS MADE BY THE ENGINEER SHALL MEET ADA REQUIREMENTS FOR CURB RAMPS.
2. MAX. ALLOWABLE RUNNING SLOPE OF RAMP = 1:12 (8.3%)
3. MAX. ALLOWABLE SLOPE OF TURNING SPACE - 1:50 (2%)
4. MIN. ALLOWABLE WIDTH OF RAMP = 4'
5. MAX. ALLOWABLE CROSS SLOPE OF SIDEWALK OR LANDING = 1:50 (2%)
6. SEE INTERSECTION DETAILS FOR ADDITIONAL ROADWAY INFORMATION
7. SEE REMOVAL PLANS FOR MORE INFORMATION ON ADA REMOVAL ITEMS

MODEL: Default
FILE NAME: V:\4216 - IL 9 Bloomington\CADD\CADD Sheets\0570855-ahr-detailPeggyLn1.dgn

Hutchison Engineering, Inc.

USER NAME = BDeCraene	DESIGNED -	REVISED -
	DRAWN -	REVISED -
PLOT SCALE = 8.000 ' / in.	CHECKED -	REVISED -
PLOT DATE = 10/17/2023	DATE -	REVISED -

STATE OF ILLINOIS
DEPARTMENT OF TRANSPORTATION

IL 9 (W. MARKET ST.) & PEGGY LN.
RAMP DETAILS

SCALE: 1"=4' | SHEET 3 OF 18 SHEETS | STA. | TO STA.

F.A.P. RTE.	SECTION	COUNTY	TOTAL SHEETS	SHEET NO.
693	(129)RS-4	McLEAN	218	84
		CONTRACT NO. 70855		
	ILLINOIS FED. AID PROJECT			

N.W. QUADRANT
IL 9 (W. MARKET ST.) & CAROLINE ST.

N

0 4 8 12

SCALE IN FEET

LOCATION	STATION	OFFSET	ELEVATION	
1	72+35.38	45.70 LT	743.53	
2	72+35.88	51.00 LT	743.48	
3	72+36.66	59.88 LT	743.40	*
4	72+35.21	60.02 LT	743.31	*
5	72+34.40	51.00 LT	743.41	
6	72+33.93	45.92 LT	743.46	
7	72+33.36	46.00 LT	743.50	
8	72+33.83	51.00 LT	743.45	
9	72+28.47	51.00 LT	743.53	
10	72+23.58	51.00 LT	743.56	
11	72+23.57	46.00 LT	743.63	
12	72+28.47	46.00 LT	743.60	

*MATCH EXISTING GRADE

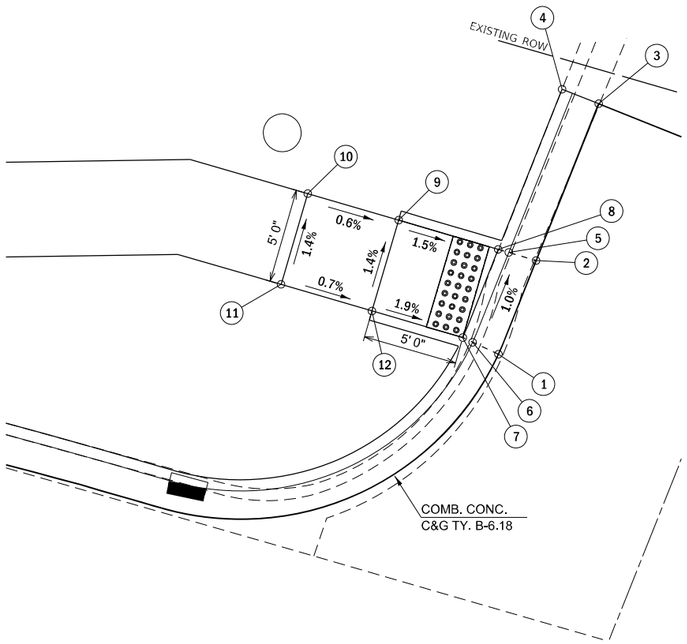

DETECTABLE WARNING

N.E. QUADRANT
IL 9 (W. MARKET ST.) & CAROLINE ST.

N

0 4 8 12

SCALE IN FEET

LOCATION	STATION	OFFSET	ELEVATION	
1	72+59.33	57.85 LT	743.42	*
2	72+58.85	53.03 LT	743.46	
3	72+59.28	44.84 LT	743.53	
4	72+75.35	32.98 LT	743.88	
5	72+81.46	33.01 LT	743.89	
6	72+96.68	33.04 LT	743.93	
7	72+96.68	34.54 LT	743.84	
8	72+81.46	34.51 LT	743.82	
9	72+75.36	34.48 LT	743.81	
10	72+60.88	44.84 LT	743.46	
11	72+60.38	52.89 LT	743.39	
12	72+60.86	57.70 LT	743.33	*
13	72+60.97	52.83 LT	743.43	
14	72+61.51	44.84 LT	743.50	
15	72+75.36	35.06 LT	743.85	
16	72+81.45	35.10 LT	743.86	

*MATCH EXISTING GRADE

LOCATION	STATION	OFFSET	ELEVATION
17	72+91.61	35.16 LT	744.32
18	72+96.68	35.14 LT	744.34
19	72+96.84	44.49 LT	744.48
20	72+96.97	52.48 LT	744.60
21	72+91.85	52.56 LT	744.54
22	72+81.62	52.67 LT	744.23
23	72+75.48	52.72 LT	744.18
24	72+67.67	52.76 LT	743.78
25	72+67.64	44.76 LT	743.79
26	72+75.43	44.72 LT	744.13
27	72+81.54	44.68 LT	744.17
28	72+91.74	44.56 LT	744.46
29	72+75.40	41.06 LT	744.02
30	72+81.51	41.10 LT	744.05
31	72+86.52	35.12 LT	744.31

*MATCH EXISTING GRADE

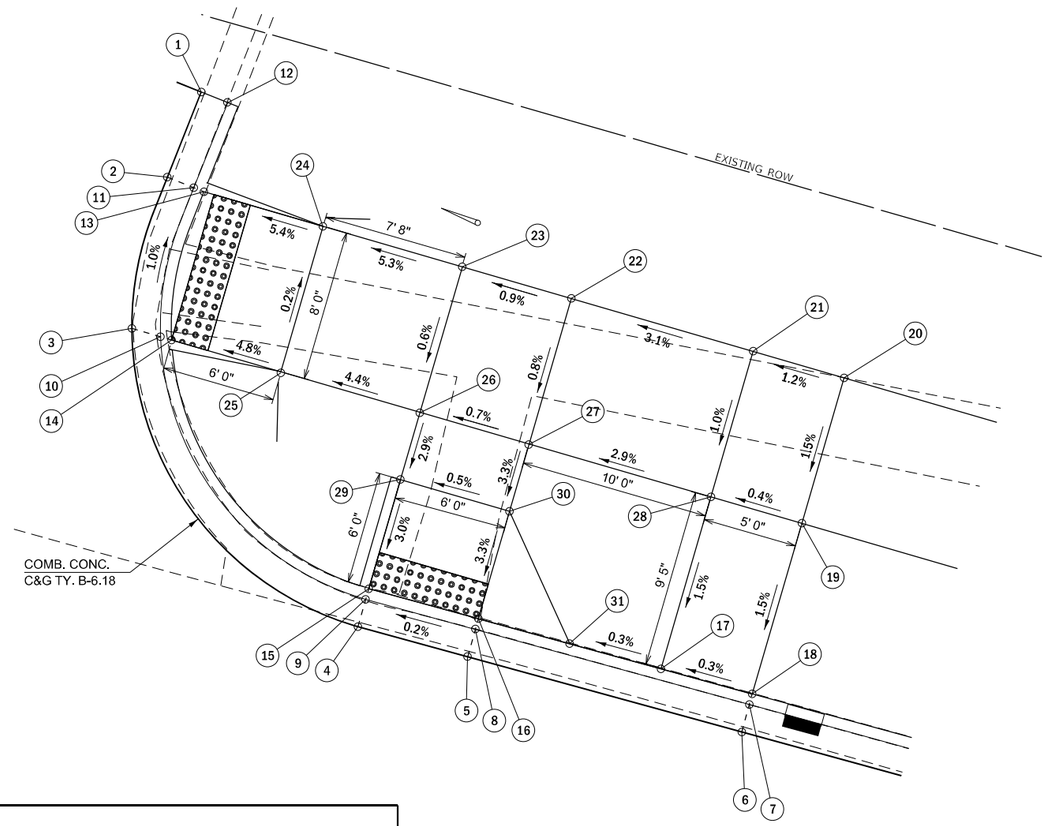

DETECTABLE WARNING

NOTES:

1. EXISTING CONDITIONS MAY VARY SLIGHTLY IN THE FIELD. THE ENGINEER MAY ADJUST GRADES AND TIE IN LOCATIONS AS NECESSARY TO CONSTRUCT RAMPS. ANY ADJUSTMENTS MADE BY THE ENGINEER SHALL MEET ADA REQUIREMENTS FOR CURB RAMPS.
2. MAX. ALLOWABLE RUNNING SLOPE OF RAMP = 1:12 (8.3%)
3. MAX. ALLOWABLE SLOPE OF TURNING SPACE - 1:50 (2%)
4. MIN. ALLOWABLE WIDTH OF RAMP = 4'
5. MAX. ALLOWABLE CROSS SLOPE OF SIDEWALK OR LANDING = 1:50 (2%)
6. SEE INTERSECTION DETAILS FOR ADDITIONAL ROADWAY INFORMATION
7. SEE REMOVAL PLANS FOR MORE INFORMATION ON ADA REMOVAL ITEMS

MODEL: Default
FILE NAME: V:\4216 - IL 9 Bloomington\CADD\CADD Sheets\D5 70855-sht-detail-Caroline1.dgn

Hutchison Engineering, Inc.

USER NAME = BDeCraene	DESIGNED -	REVISED -	
	DRAWN -	REVISED -	
PLOT SCALE = 8.000 ' / in.	CHECKED -	REVISED -	
PLOT DATE = 10/17/2023	DATE -	REVISED -	

STATE OF ILLINOIS
DEPARTMENT OF TRANSPORTATION

IL 9 (W. MARKET ST.) & CAROLINE ST.
RAMP DETAILS

SCALE: 1"=4' | SHEET 4 OF 18 SHEETS | STA. | TO STA.

F.A.P. RTE.	SECTION	COUNTY	TOTAL SHEETS	SHEET NO.
693	(129)RS-4	McLEAN	218	85
		CONTRACT NO. 70855		
	ILLINOIS FED. AID PROJECT			

S.W. QUADRANT
IL 9 (W. MARKET ST.) & CAROLINE ST.

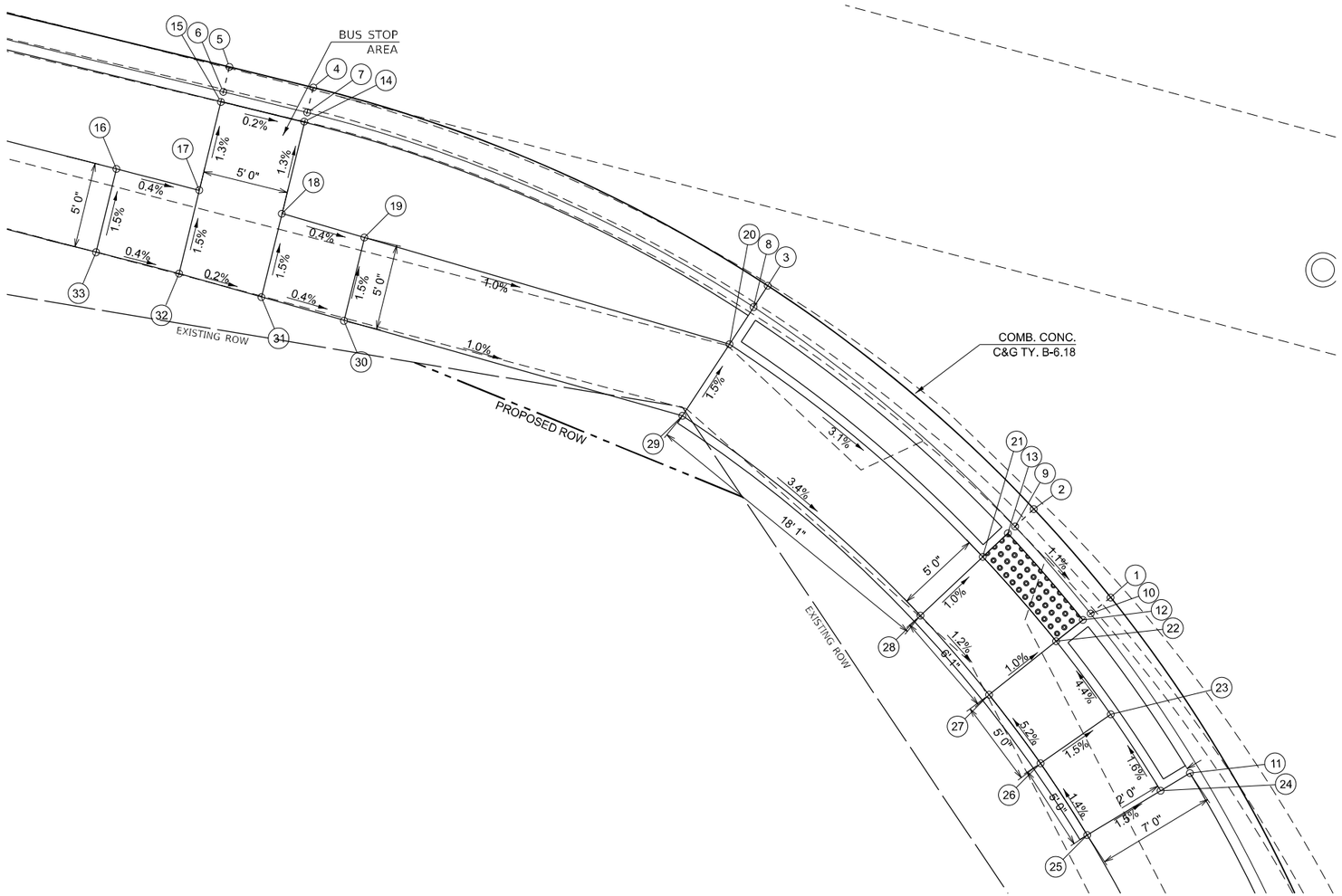

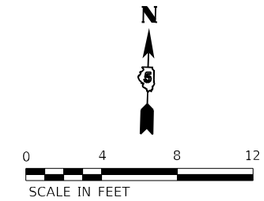

LOCATION	STATION	OFFSET	ELEVATION
1	71+83.68	49.14 RT	743.73
2	71+77.88	45.33 RT	743.80
3	71+59.21	36.70 RT	743.95
4	71+30.23	32.00 RT	744.14
5	71+25.13	32.00 RT	744.15
6	71+25.13	33.50 RT	744.06
7	71+30.23	33.50 RT	744.05
8	71+58.72	38.12 RT	743.86
9	71+77.08	46.60 RT	743.73
10	71+82.77	50.35 RT	743.66
11	71+91.01	57.80 RT	743.99
12	71+82.42	50.83 RT	743.70
13	71+76.76	47.10 RT	743.77
14	71+30.23	34.08 RT	744.55
15	71+25.13	34.08 RT	744.56
16	71+20.04	39.34 RT	744.65
17	71+25.13	39.41 RT	744.63
18	71+30.23	39.58 RT	744.62
19	71+35.32	39.79 RT	744.60
20	71+57.88	40.57 RT	744.39
21	71+75.69	48.80 RT	743.79
22	71+81.21	52.44 RT	743.72
23	71+85.51	55.72 RT	743.96
24	71+89.59	59.25 RT	744.03
25	71+86.06	62.88 RT	744.10
26	71+82.22	59.56 RT	744.03
27	71+78.18	56.47 RT	743.77
28	71+72.99	53.05 RT	743.84
29	71+56.24	45.30 RT	744.46
30	71+35.33	44.75 RT	744.67
31	71+30.23	44.58 RT	744.69
32	71+25.13	44.41 RT	744.70
33	71+20.03	44.34 RT	744.72

*MATCH EXISTING GRADE

NOTES:

1. EXISTING CONDITIONS MAY VARY SLIGHTLY IN THE FIELD. THE ENGINEER MAY ADJUST GRADES AND TIE IN LOCATIONS AS NECESSARY TO CONSTRUCT RAMPS. ANY ADJUSTMENTS MADE BY THE ENGINEER SHALL MEET ADA REQUIREMENTS FOR CURB RAMPS.
2. MAX. ALLOWABLE RUNNING SLOPE OF RAMP = 1:12 (8.3%)
3. MAX. ALLOWABLE SLOPE OF TURNING SPACE - 1:50 (2%)
4. MIN. ALLOWABLE WIDTH OF RAMP = 4'
5. MAX. ALLOWABLE CROSS SLOPE OF SIDEWALK OR LANDING = 1:50 (2%)
6. SEE INTERSECTION DETAILS FOR ADDITIONAL ROADWAY INFORMATION
7. SEE REMOVAL PLANS FOR MORE INFORMATION ON ADA REMOVAL ITEMS

DETECTABLE WARNING

MODEL: Default
FILE NAME: V:\4216 - IL 9 Bloomington\CADD\CADD Sheets\D570855-dtr-detail-Caroline2.dgn

Hutchison Engineering, Inc.

USER NAME = BDeCraene	DESIGNED -	REVISED -	
	DRAWN -	REVISED -	
PLOT SCALE = 8.000 ' / in.	CHECKED -	REVISED -	
PLOT DATE = 10/17/2023	DATE -	REVISED -	

STATE OF ILLINOIS
DEPARTMENT OF TRANSPORTATION

IL 9 (W. MARKET ST.) & CAROLINE ST.
RAMP DETAILS

SCALE: 1"=4' | SHEET 5 OF 18 SHEETS | STA. | TO STA.

F.A.P. RTE.	SECTION	COUNTY	TOTAL SHEETS	SHEET NO.
693	(129)RS-4	McLEAN	218	86
		CONTRACT NO. 70855		
	ILLINOIS FED. AID PROJECT			

S.E. QUADRANT
IL 9 (W. MARKET ST.) & CAROLINE ST.

LOCATION	STATION	OFFSET	ELEVATION	
1	73+09.81	42.64 RT	743.90	
2	73+03.70	46.34 RT	743.81	
3	73+04.50	47.59 RT	743.74	
4	73+10.50	43.96 RT	743.83	
5	73+26.00	38.00 RT	744.46	
6	73+21.90	39.39 RT	744.42	
7	73+22.58	41.27 RT	744.44	
8	73+11.70	46.24 RT	743.89	
9	73+10.78	44.48 RT	743.87	
10	73+04.81	48.08 RT	743.78	
11	72+99.30	52.09 RT	744.09	
12	73+00.66	53.89 RT	743.98	
13	72+97.77	58.35 RT	743.89	
14	72+96.02	63.15 RT	743.63	*
15	72+99.14	65.28 RT	743.73	*
16	73+01.83	61.12 RT	743.94	
17	73+04.72	56.66 RT	744.03	
18	73+08.55	53.95 RT	743.85	
19	73+14.02	50.64 RT	743.94	
20	73+21.28	46.00 RT	744.47	
21	73+28.48	46.00 RT	744.51	

*MATCH EXISTING GRADE

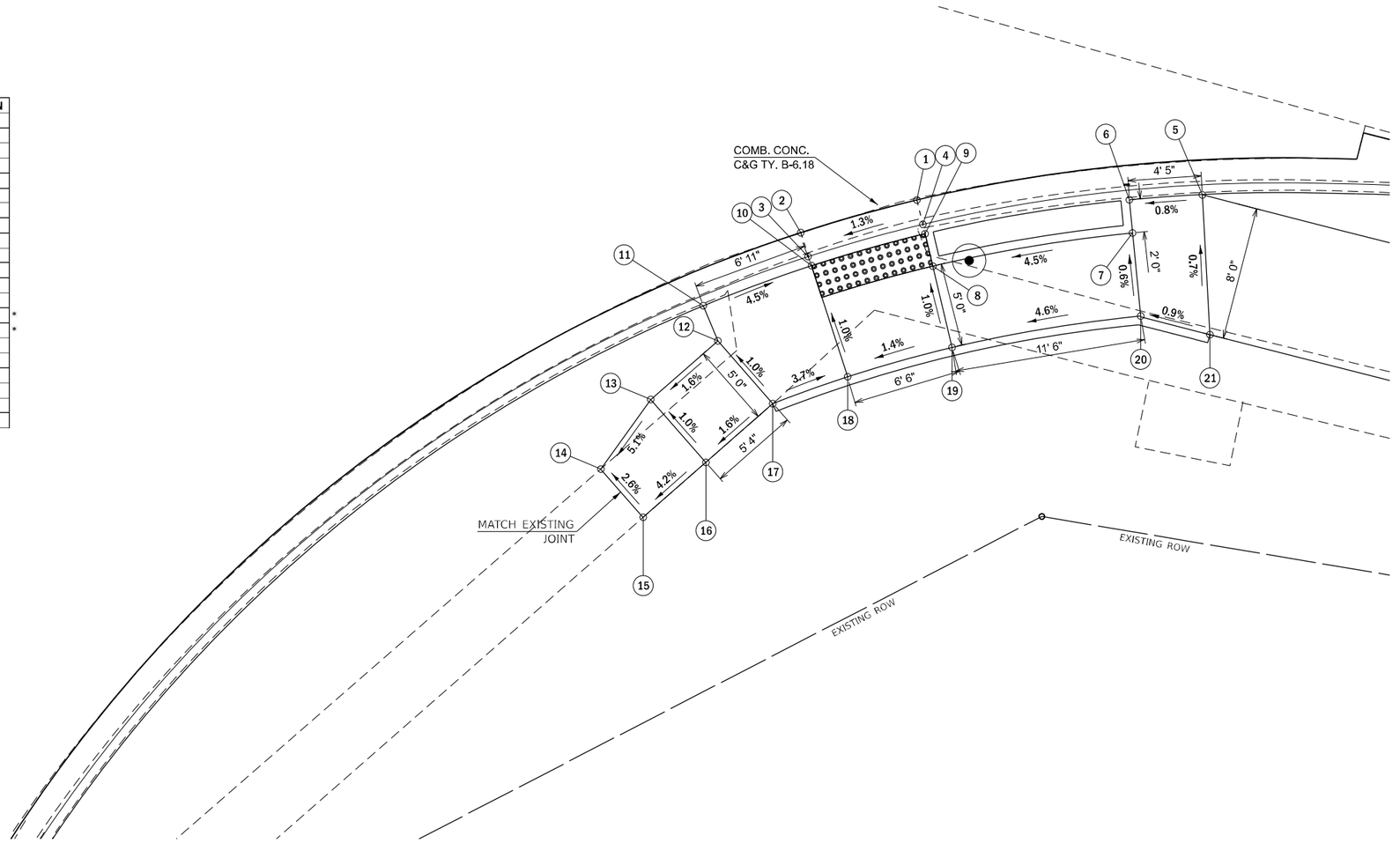

N

0 4 8 12

SCALE IN FEET

NOTES:

1. EXISTING CONDITIONS MAY VARY SLIGHTLY IN THE FIELD. THE ENGINEER MAY ADJUST GRADES AND TIE IN LOCATIONS AS NECESSARY TO CONSTRUCT RAMPS. ANY ADJUSTMENTS MADE BY THE ENGINEER SHALL MEET ADA REQUIREMENTS FOR CURB RAMPS.
2. MAX. ALLOWABLE RUNNING SLOPE OF RAMP = 1:12 (8.3%)
3. MAX. ALLOWABLE SLOPE OF TURNING SPACE - 1:50 (2%)
4. MIN. ALLOWABLE WIDTH OF RAMP = 4'
5. MAX. ALLOWABLE CROSS SLOPE OF SIDEWALK OR LANDING = 1:50 (2%)
6. SEE INTERSECTION DETAILS FOR ADDITIONAL ROADWAY INFORMATION
7. SEE REMOVAL PLANS FOR MORE INFORMATION ON ADA REMOVAL ITEMS

DETECTABLE WARNING

MODEL: Default
FILE NAME: V:\4216 - IL 9 Bloomington\CADD\CADD Sheets\95700855-ifm-detail-Caroline3.dgn

Hutchison Engineering, Inc.

USER NAME = BDeCraene	DESIGNED -	REVISED -
	DRAWN -	REVISED -
PLOT SCALE = 8.000 ' / in.	CHECKED -	REVISED -
PLOT DATE = 10/17/2023	DATE -	REVISED -

STATE OF ILLINOIS
DEPARTMENT OF TRANSPORTATION

IL 9 (W. MARKET ST.) & CAROLINE ST.
RAMP DETAILS

SCALE: 1"=4' | SHEET 6 OF 18 SHEETS | STA. | TO STA.

F.A.P. RTE.	SECTION	COUNTY	TOTAL SHEETS	SHEET NO.
693	(129)RS-4	McLEAN	218	87
		CONTRACT NO. 70855		
	ILLINOIS	FED. AID PROJECT		

N.W. QUADRANT
IL 9 (W. MARKET ST.) & BROWN ST.

LOCATION	STATION	OFFSET	ELEVATION
15	77+43.66	46.00 LT	746.74
16	77+33.66	46.00 LT	746.33
17	77+33.66	48.50 LT	746.28
18	77+28.66	48.50 LT	746.23
19	77+28.66	46.00 LT	746.28
20	77+18.66	46.00 LT	746.63
21	77+18.66	38.00 LT	746.51
22	77+28.66	38.00 LT	746.43
23	77+28.66	34.08 LT	746.51
24	77+28.66	33.50 LT	746.01
25	77+28.66	32.00 LT	746.10
26	77+33.66	32.00 LT	746.12
27	77+33.66	33.50 LT	746.03
28	77+33.66	34.08 LT	746.53
29	77+33.66	38.00 LT	746.47
30	77+43.66	38.00 LT	746.62

*MATCH EXISTING GRADE

LOCATION	STATION	OFFSET	ELEVATION
1	77+83.61	32.00 LT	746.38
2	77+88.61	32.00 LT	746.40
3	77+88.61	33.50 LT	746.33
4	77+83.61	33.50 LT	746.31
5	77+83.61	34.08 LT	746.35
6	77+88.61	34.08 LT	746.37
7	77+88.61	38.00 LT	746.60
8	77+96.61	38.00 LT	746.92
9	77+96.61	46.00 LT	747.04
10	77+88.61	46.00 LT	746.71
11	77+83.61	46.00 LT	746.65
12	77+75.61	46.00 LT	746.93
13	77+75.61	38.00 LT	746.81
14	77+83.61	38.00 LT	746.54

*MATCH EXISTING GRADE

N

0 4 8 12

SCALE IN FEET

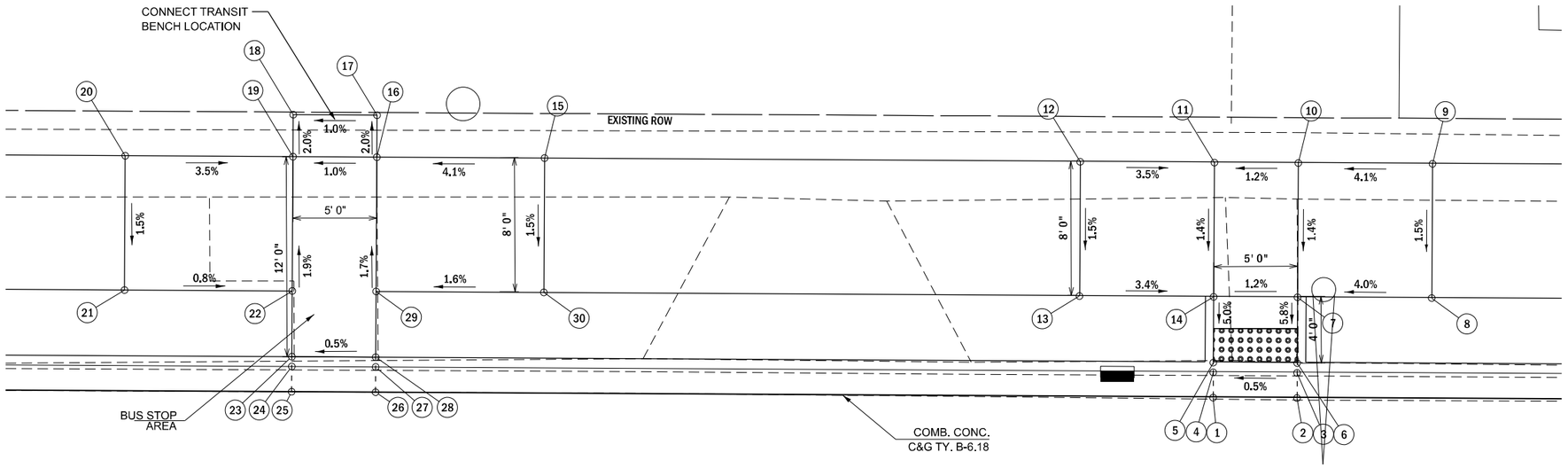

DETECTABLE WARNING

NOTES:

1. EXISTING CONDITIONS MAY VARY SLIGHTLY IN THE FIELD. THE ENGINEER MAY ADJUST GRADES AND TIE IN LOCATIONS AS NECESSARY TO CONSTRUCT RAMPS. ANY ADJUSTMENTS MADE BY THE ENGINEER SHALL MEET ADA REQUIREMENTS FOR CURB RAMPS.
2. MAX. ALLOWABLE RUNNING SLOPE OF RAMP = 1:12 (8.3%)
3. MAX. ALLOWABLE SLOPE OF TURNING SPACE - 1:50 (2%)
4. MIN. ALLOWABLE WIDTH OF RAMP = 4'
5. MAX. ALLOWABLE CROSS SLOPE OF SIDEWALK OR LANDING = 1:50 (2%)
6. SEE INTERSECTION DETAILS FOR ADDITIONAL ROADWAY INFORMATION
7. SEE REMOVAL PLANS FOR MORE INFORMATION ON ADA REMOVAL ITEMS

MODEL: Default
FILE NAME: V:\4216 - IL 9 Bloomington\CADD\CADD Sheets\0570855-dtl-detailBrown1.dgn

Hutchison Engineering, Inc.

USER NAME = BDeCraene	DESIGNED -	REVISED -
	DRAWN -	REVISED -
PLOT SCALE = 8.000 ' / in.	CHECKED -	REVISED -
PLOT DATE = 10/17/2023	DATE -	REVISED -

STATE OF ILLINOIS
DEPARTMENT OF TRANSPORTATION

IL 9 (W. MARKET ST.) & BROWN ST.
RAMP DETAILS

SCALE: 1"=4' | SHEET 7 OF 18 SHEETS | STA. | TO STA.

F.A.P. RTE.	SECTION	COUNTY	TOTAL SHEETS	SHEET NO.
693	(129)RS-4	McLEAN	218	88
		CONTRACT NO. 70855		
	ILLINOIS FED. AID PROJECT			

S.W. QUADRANT
IL 9 (W. MARKET ST.) & BROWN ST.

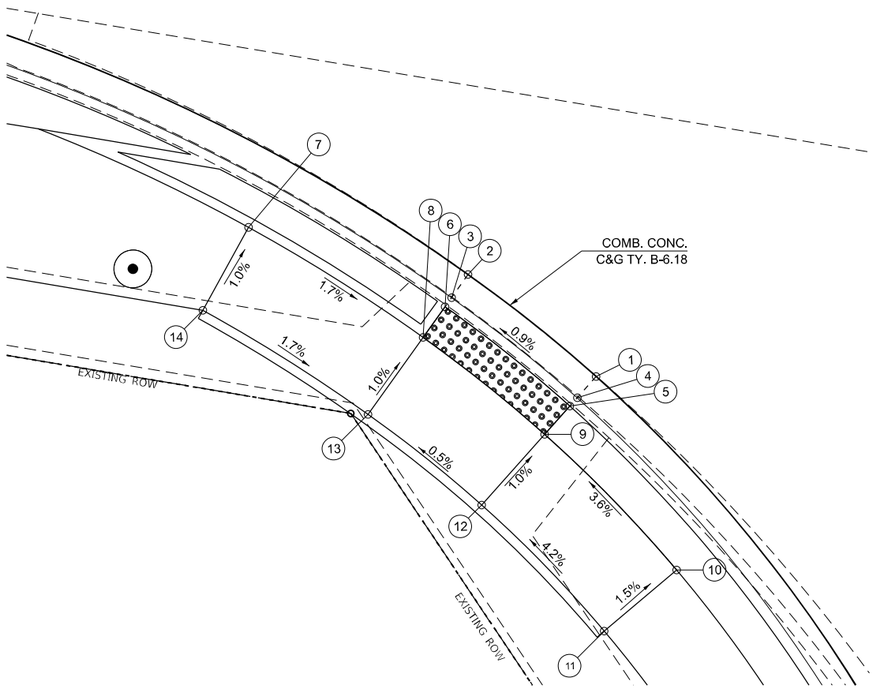

LOCATION	STATION	OFFSET	ELEVATION
1	77+84.70	46.01 RT	746.11
2	77+77.14	41.82 RT	746.15
3	77+76.48	43.17 RT	746.08
4	77+83.90	47.28 RT	746.04
5	77+83.59	47.77 RT	746.08
6	77+76.22	43.69 RT	746.12
7	77+65.28	41.28 RT	746.32
8	77+75.34	45.49 RT	746.14
9	77+82.52	49.47 RT	746.10
10	77+90.58	55.38 RT	746.46
11	77+87.34	59.19 RT	746.54
12	77+79.86	53.70 RT	746.15
13	77+73.14	49.98 RT	746.19
14	77+63.63	46.00 RT	746.37

*MATCH EXISTING GRADE

N

0 4 8 12

SCALE IN FEET

NOTES:

1. EXISTING CONDITIONS MAY VARY SLIGHTLY IN THE FIELD. THE ENGINEER MAY ADJUST GRADES AND TIE IN LOCATIONS AS NECESSARY TO CONSTRUCT RAMPS. ANY ADJUSTMENTS MADE BY THE ENGINEER SHALL MEET ADA REQUIREMENTS FOR CURB RAMPS.
2. MAX. ALLOWABLE RUNNING SLOPE OF RAMP = 1:12 (8.3%)
3. MAX. ALLOWABLE SLOPE OF TURNING SPACE - 1:50 (2%)
4. MIN. ALLOWABLE WIDTH OF RAMP = 4'
5. MAX. ALLOWABLE CROSS SLOPE OF SIDEWALK OR LANDING = 1:50 (2%)
6. SEE INTERSECTION DETAILS FOR ADDITIONAL ROADWAY INFORMATION
7. SEE REMOVAL PLANS FOR MORE INFORMATION ON ADA REMOVAL ITEMS

DETECTABLE WARNING

MODEL: Default
FILE NAME: V:\4216 - IL 9 Bloomington\CADD\C4DD Sheets\D570855-dhc-detailBrown2.dgn

Hutchison Engineering, Inc.

USER NAME = BDeCraene	DESIGNED -	REVISED -
	DRAWN -	REVISED -
PLOT SCALE = 8.000 ' / in.	CHECKED -	REVISED -
PLOT DATE = 10/17/2023	DATE -	REVISED -

STATE OF ILLINOIS
DEPARTMENT OF TRANSPORTATION

IL 9 (W. MARKET ST.) & BROWN ST.
RAMP DETAILS

SCALE: 1"=4' | SHEET 8 OF 18 SHEETS | STA. | TO STA.

F.A.P. RTE.	SECTION	COUNTY	TOTAL SHEETS	SHEET NO.
693	(129)RS-4	McLEAN	218	89
		CONTRACT NO. 70855		
	ILLINOIS FED. AID PROJECT			

S.E. QUADRANT
IL 9 (W. MARKET ST.) & BROWN ST.

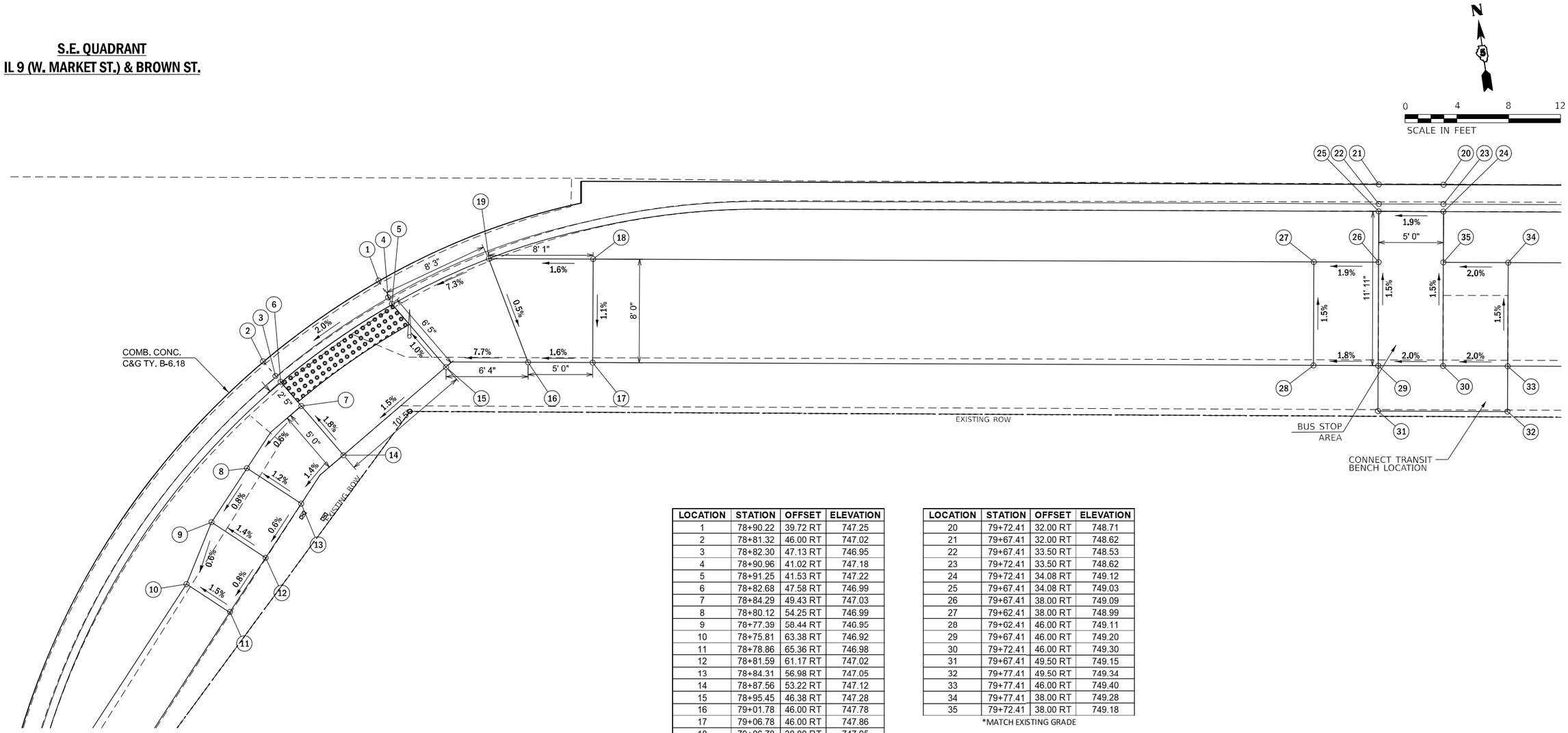

LOCATION	STATION	OFFSET	ELEVATION
1	78+90.22	39.72 RT	747.25
2	78+81.32	46.00 RT	747.02
3	78+82.30	47.13 RT	746.95
4	78+90.96	41.02 RT	747.18
5	78+91.25	41.53 RT	747.22
6	78+82.68	47.58 RT	746.99
7	78+84.29	49.43 RT	747.03
8	78+80.12	54.25 RT	746.99
9	78+77.39	58.44 RT	746.95
10	78+75.81	63.38 RT	746.92
11	78+78.86	65.36 RT	746.98
12	78+81.59	61.17 RT	747.02
13	78+84.31	56.98 RT	747.05
14	78+87.56	53.22 RT	747.12
15	78+95.45	46.38 RT	747.28
16	79+01.78	46.00 RT	747.78
17	79+06.78	46.00 RT	747.86
18	79+06.78	38.00 RT	747.95
19	78+98.71	38.00 RT	747.82

*MATCH EXISTING GRADE

LOCATION	STATION	OFFSET	ELEVATION
20	79+72.41	32.00 RT	748.71
21	79+67.41	32.00 RT	748.62
22	79+67.41	33.50 RT	748.53
23	79+72.41	33.50 RT	748.62
24	79+72.41	34.08 RT	749.12
25	79+67.41	34.08 RT	749.03
26	79+67.41	38.00 RT	749.09
27	79+62.41	38.00 RT	748.99
28	79+62.41	46.00 RT	749.11
29	79+67.41	46.00 RT	749.20
30	79+72.41	46.00 RT	749.30
31	79+67.41	49.50 RT	749.15
32	79+77.41	49.50 RT	749.34
33	79+77.41	46.00 RT	749.40
34	79+77.41	38.00 RT	749.28
35	79+72.41	38.00 RT	749.18

*MATCH EXISTING GRADE

DETECTABLE WARNING

NOTES:

1. EXISTING CONDITIONS MAY VARY SLIGHTLY IN THE FIELD. THE ENGINEER MAY ADJUST GRADES AND TIE IN LOCATIONS AS NECESSARY TO CONSTRUCT RAMPS. ANY ADJUSTMENTS MADE BY THE ENGINEER SHALL MEET ADA REQUIREMENTS FOR CURB RAMPS.
2. MAX. ALLOWABLE RUNNING SLOPE OF RAMP = 1:12 (8.3%)
3. MAX. ALLOWABLE SLOPE OF TURNING SPACE - 1:50 (2%)
4. MIN. ALLOWABLE WIDTH OF RAMP = 4'
5. MAX. ALLOWABLE CROSS SLOPE OF SIDEWALK OR LANDING = 1:50 (2%)
6. SEE INTERSECTION DETAILS FOR ADDITIONAL ROADWAY INFORMATION
7. SEE REMOVAL PLANS FOR MORE INFORMATION ON ADA REMOVAL ITEMS

MODEL: Default
FILE NAME: V:\4216 - IL 9 Bloomington\CADD\CADD Sheets\D570855-sht-detail-Brown3.dgn

Hutchison Engineering, Inc.

USER NAME = BDeCraene	DESIGNED -	REVISED -
	DRAWN -	REVISED -
PLOT SCALE = 8.000 ' / in.	CHECKED -	REVISED -
PLOT DATE = 10/17/2023	DATE -	REVISED -

STATE OF ILLINOIS
DEPARTMENT OF TRANSPORTATION

IL 9 (W. MARKET ST.) & BROWN ST.
RAMP DETAILS

SCALE: 1"=4' | SHEET 9 OF 18 SHEETS | STA. | TO STA.

F.A.P. RTE.	SECTION	COUNTY	TOTAL SHEETS	SHEET NO.
693	(129)RS-4	McLEAN	218	90
		CONTRACT NO. 70855		
	ILLINOIS	FED. AID PROJECT		

N.W. QUADRANT
IL 9 (W. MARKET ST.) & WHITE OAK RD.

LOCATION	STATION	OFFSET	ELEVATION	
1	83+17.14	51.00 LT	759.93	
2	83+11.57	41.63 LT	759.99	
3	83+10.44	42.62 LT	759.92	
4	83+15.54	51.00 LT	759.86	
5	83+14.91	51.00 LT	759.90	
6	83+10.00	43.00 LT	759.96	
7	83+00.03	43.00 LT	760.06	
8	82+92.07	36.14 LT	760.16	*
9	82+81.37	35.74 LT	760.17	*
10	82+68.32	35.74 LT	760.00	
11	82+62.41	36.49 LT	759.75	
12	82+63.41	44.37 LT	759.87	
13	82+68.37	43.74 LT	760.08	
14	82+78.16	43.74 LT	760.14	*
15	82+88.73	44.45 LT	760.12	*
16	82+92.54	44.71 LT	760.11	
17	82+99.87	51.00 LT	760.09	

*MATCH EXISTING GRADE

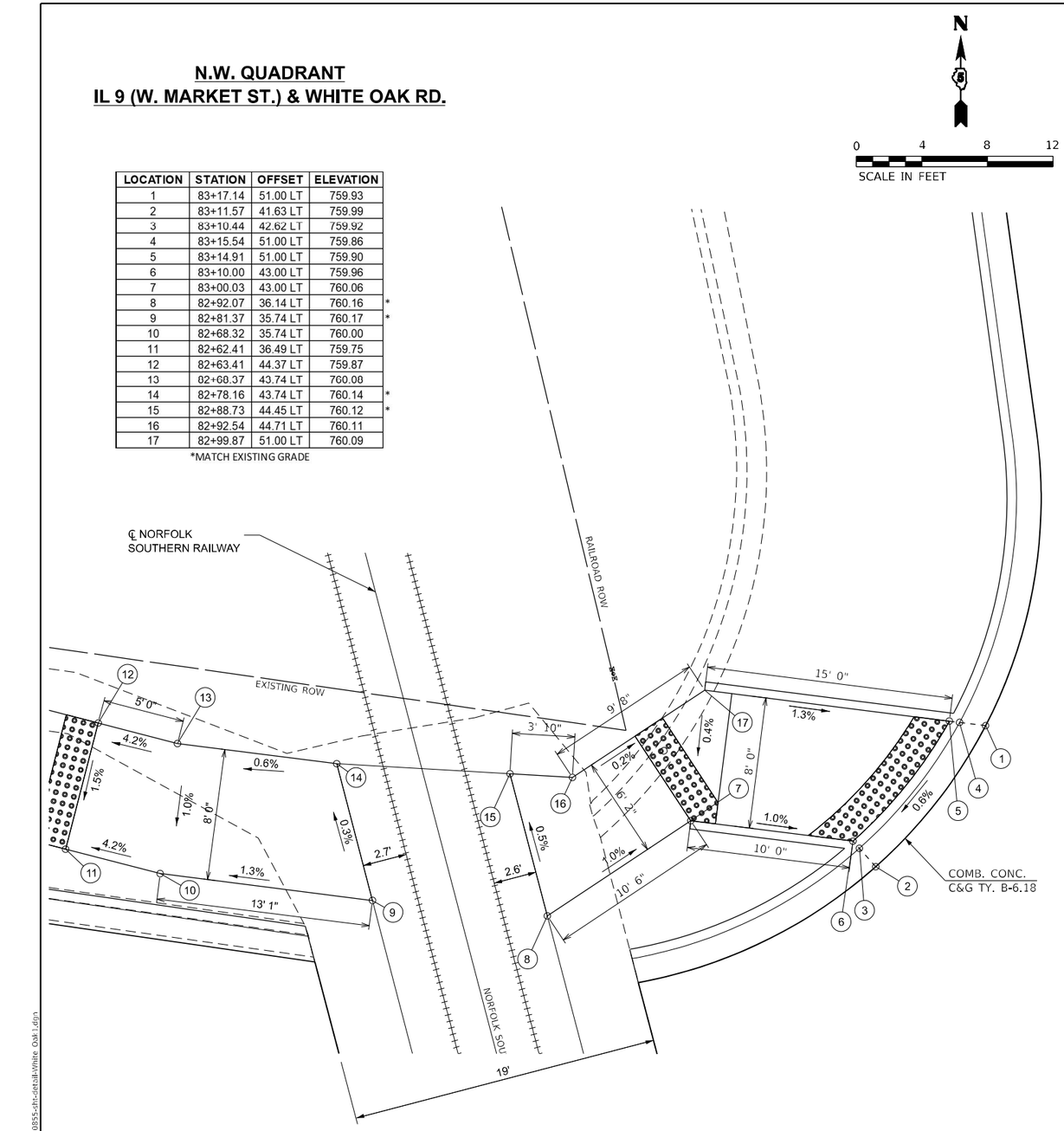

DETECTABLE WARNING

N.E. QUADRANT
IL 9 (W. MARKET ST.) & WHITE OAK RD.

LOCATION	STATION	OFFSET	ELEVATION
1	83+70.42	35.93 LT	760.64
2	83+57.90	46.01 LT	760.38
3	83+59.92	45.96 LT	760.33
4	83+71.10	37.26 LT	760.57
5	83+71.37	37.78 LT	760.61
6	83+60.72	45.94 LT	760.38
7	83+63.57	45.87 LT	760.41
8	83+59.10	51.20 LT	760.70
9	83+56.10	56.50 LT	760.75
10	83+60.64	58.59 LT	760.83
11	83+63.23	54.03 LT	760.78
12	83+67.07	49.43 LT	760.50
13	83+71.51	45.78 LT	760.57
14	83+83.29	45.58 LT	761.48
15	83+88.29	45.49 LT	761.57
16	83+88.29	37.49 LT	761.45
17	83+83.15	37.58 LT	761.39

*MATCH EXISTING GRADE

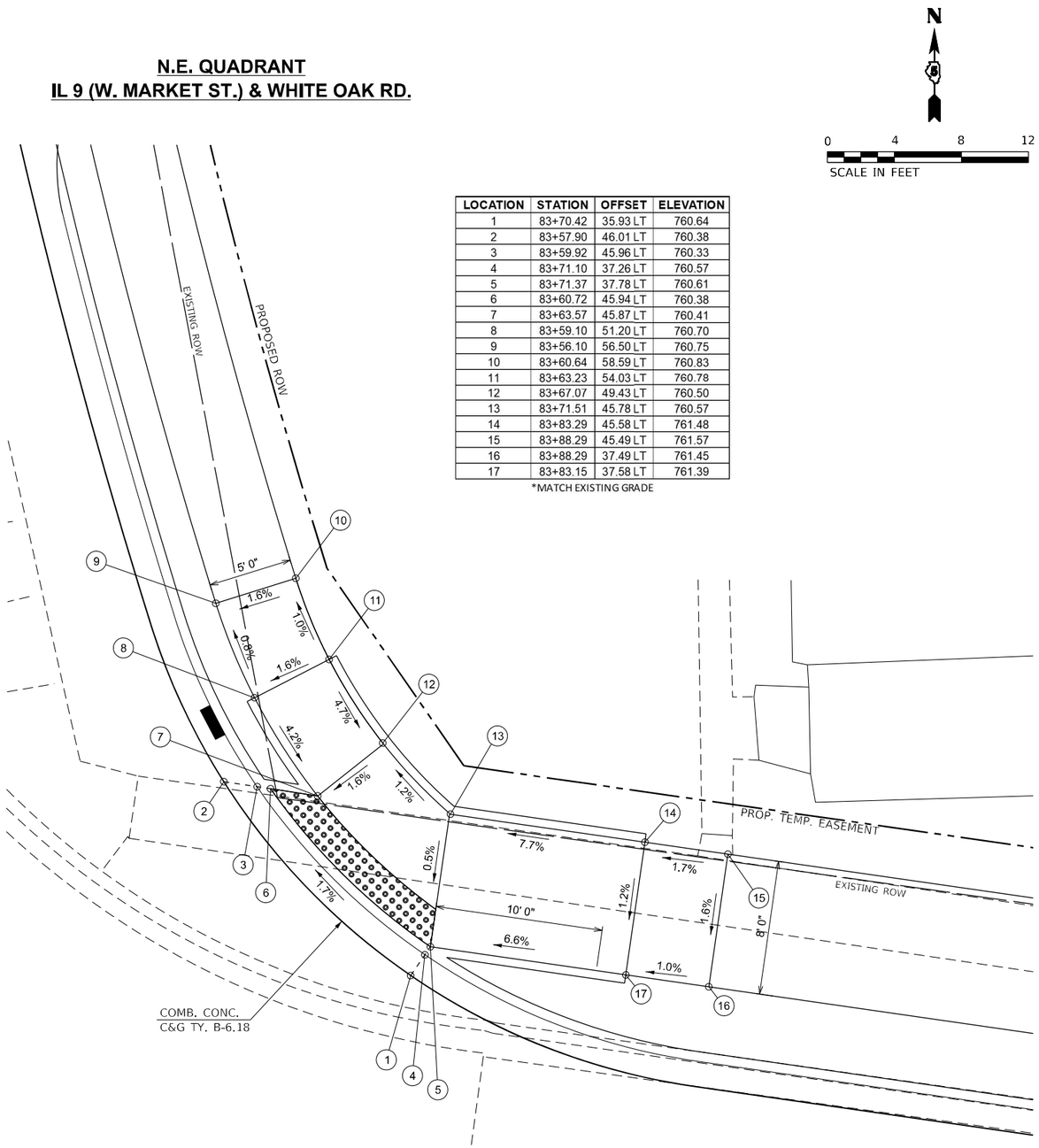

DETECTABLE WARNING

NOTES:

1. EXISTING CONDITIONS MAY VARY SLIGHTLY IN THE FIELD. THE ENGINEER MAY ADJUST GRADES AND TIE IN LOCATIONS AS NECESSARY TO CONSTRUCT RAMPS. ANY ADJUSTMENTS MADE BY THE ENGINEER SHALL MEET ADA REQUIREMENTS FOR CURB RAMPS.
2. MAX. ALLOWABLE RUNNING SLOPE OF RAMP = 1:12 (8.3%)
3. MAX. ALLOWABLE SLOPE OF TURNING SPACE - 1:50 (2%)
4. MIN. ALLOWABLE WIDTH OF RAMP = 4'
5. MAX. ALLOWABLE CROSS SLOPE OF SIDEWALK OR LANDING = 1:50 (2%)
6. SEE INTERSECTION DETAILS FOR ADDITIONAL ROADWAY INFORMATION
7. SEE REMOVAL PLANS FOR MORE INFORMATION ON ADA REMOVAL ITEMS

Hutchison Engineering, Inc.

USER NAME = BDeCraene	DESIGNED -	REVISED - 11/16/2023	
	DRAWN -	REVISED -	
PLOT SCALE = 8.000 ' / in.	CHECKED -	REVISED -	
PLOT DATE = 11/17/2023	DATE -	REVISED -	

STATE OF ILLINOIS
DEPARTMENT OF TRANSPORTATION

IL 9 (W. MARKET ST.) & WHITE OAK RD.
RAMP DETAILS

SCALE: 1"=4' | SHEET 10 OF 18 SHEETS | STA. | TO STA.

F.A.P. RTE.	SECTION	COUNTY	TOTAL SHEETS	SHEET NO.
693	(129)RS-4	McLEAN	218	91
		CONTRACT NO. 70855		
	ILLINOIS FED. AID PROJECT			

MODEL: Default
FILE NAME: V:\4216 - IL 9 Bloomington\CADD\CADD Sheets\0570855-sht-detail-White Oak 1.dgn

S.W. QUADRANT
IL 9 (W. MARKET ST.) & STILLWELL ST.

LOCATION	STATION	OFFSET	ELEVATION
1	84+85.59	30.57 RT	763.58
2	84+99.11	33.11 RT	763.82
3	85+12.16	42.76 RT	764.12
4	85+10.21	42.80 RT	764.02
5	84+98.54	34.50 RT	763.75
6	84+85.62	32.07 RT	763.49
7	84+98.32	35.04 RT	763.79
8	85+09.44	42.81 RT	764.05
9	84+96.48	43.07 RT	763.96
10	84+89.58	43.21 RT	764.06
11	84+69.58	43.61 RT	763.67
12	84+69.42	35.61 RT	763.55
13	84+89.42	35.21 RT	763.92
14	84+96.32	35.08 RT	763.82

*MATCH EXISTING GRADE

N

0 4 8 12

SCALE IN FEET

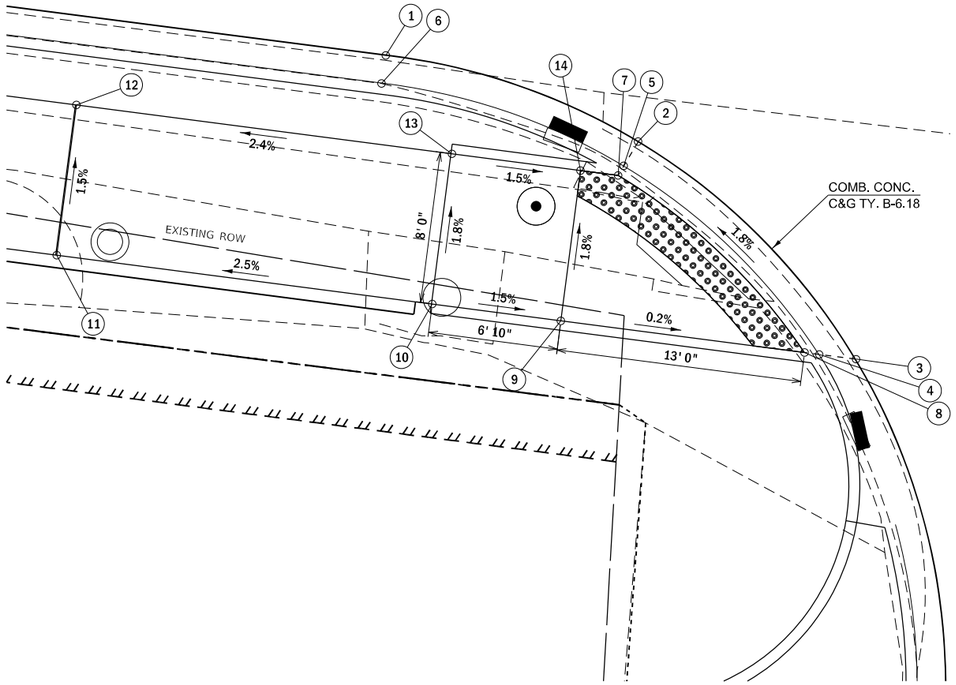

DETECTABLE WARNING

S.E. QUADRANT
IL 9 (W. MARKET ST.) & STILLWELL ST.

LOCATION	STATION	OFFSET	ELEVATION	
1	85+73.71	28.30 RT	765.88	
2	85+63.11	31.87 RT	765.67	
3	85+51.01	41.98 RT	765.48	
4	85+52.96	41.94 RT	765.41	
5	85+63.80	33.20 RT	765.60	
6	85+73.97	29.78 RT	765.79	
7	85+64.06	33.72 RT	765.64	
8	85+53.73	41.93 RT	765.45	
9	85+54.73	41.91 RT	765.46	
10	85+56.19	53.12 RT	765.92	*
11	85+60.61	52.77 RT	765.99	*
12	85+59.74	41.81 RT	765.52	
13	85+66.23	41.68 RT	765.60	
14	85+71.23	41.58 RT	765.95	
15	85+81.23	41.38 RT	766.65	
16	85+86.22	41.28 RT	766.72	
17	85+86.06	33.28 RT	766.60	
18	85+81.07	33.38 RT	766.53	
19	85+71.07	33.58 RT	765.96	
20	85+66.07	33.68 RT	765.67	

*MATCH EXISTING GRADE

N

0 4 8 12

SCALE IN FEET

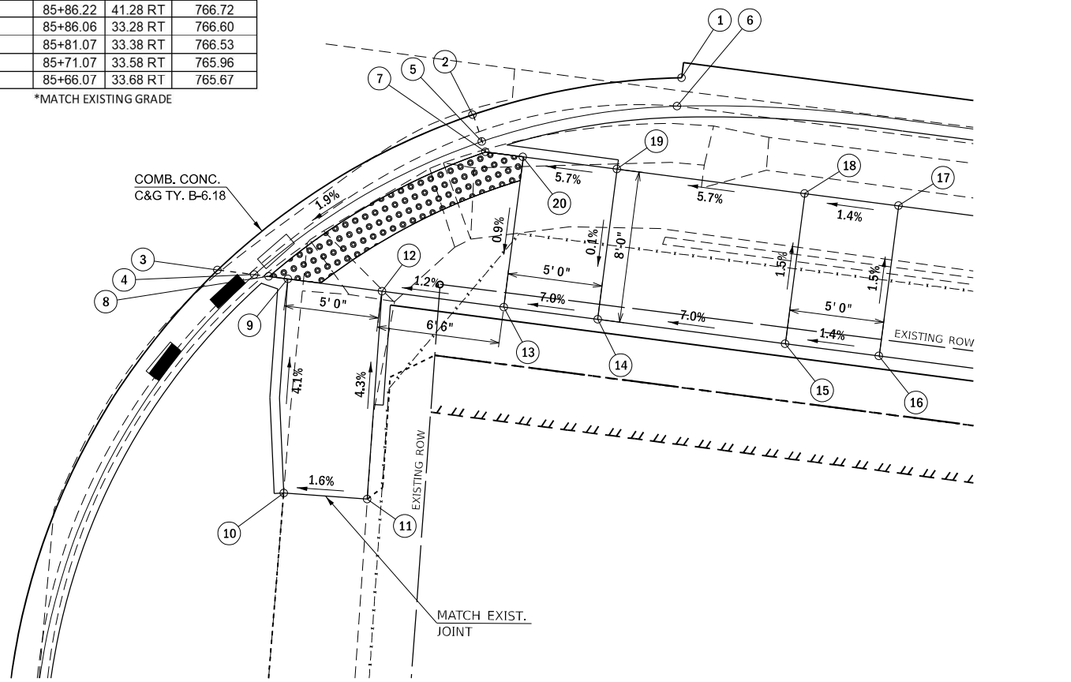

DETECTABLE WARNING

NOTES:

1. EXISTING CONDITIONS MAY VARY SLIGHTLY IN THE FIELD. THE ENGINEER MAY ADJUST GRADES AND TIE IN LOCATIONS AS NECESSARY TO CONSTRUCT RAMPS. ANY ADJUSTMENTS MADE BY THE ENGINEER SHALL MEET ADA REQUIREMENTS FOR CURB RAMPS.
2. MAX. ALLOWABLE RUNNING SLOPE OF RAMP = 1:12 (8.3%)
3. MAX. ALLOWABLE SLOPE OF TURNING SPACE - 1:50 (2%)
4. MIN. ALLOWABLE WIDTH OF RAMP = 4'
5. MAX. ALLOWABLE CROSS SLOPE OF SIDEWALK OR LANDING = 1:50 (2%)
6. SEE INTERSECTION DETAILS FOR ADDITIONAL ROADWAY INFORMATION
7. SEE REMOVAL PLANS FOR MORE INFORMATION ON ADA REMOVAL ITEMS

Hutchison Engineering, Inc.

USER NAME = BDeCraene	DESIGNED -	REVISED -	
	DRAWN -	REVISED -	
PLOT SCALE = 8.000 ' / in.	CHECKED -	REVISED -	
PLOT DATE = 10/17/2023	DATE -	REVISED -	

STATE OF ILLINOIS
DEPARTMENT OF TRANSPORTATION

IL 9 (W. MARKET ST.) & STILLWELL ST.
RAMP DETAILS

SCALE: 1"=4' | SHEET 11 OF 18 SHEETS | STA. | TO STA.

F.A.P. RTE.	SECTION	COUNTY	TOTAL SHEETS	SHEET NO.
693	(129)RS-4	McLEAN	218	92
		CONTRACT NO. 70855		
	ILLINOIS FED. AID PROJECT			

MODEL: Default
FILE NAME: V:\4216 - IL 9 Bloomington\CADD\CADD Sheets\0570855-sht-detail-Stillwell.dgn

S.W. QUADRANT
IL 9 (W. MARKET ST.) & HOLTON DR.

N

0 4 8 12
SCALE IN FEET

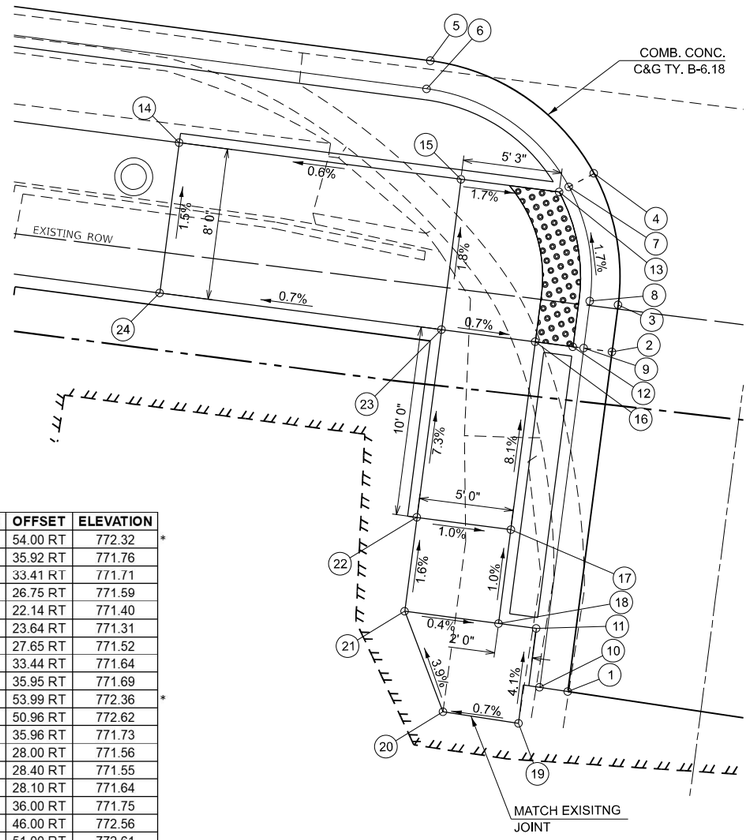

LOCATION	STATION	OFFSET	ELEVATION	
1	88+54.62	54.00 RT	772.32	*
2	88+54.26	35.92 RT	771.76	
3	88+54.21	33.41 RT	771.71	
4	88+51.92	26.75 RT	771.59	
5	88+42.49	22.14 RT	771.40	
6	88+42.52	23.64 RT	771.31	
7	88+50.72	27.65 RT	771.52	
8	88+52.71	33.44 RT	771.64	
9	88+52.76	35.95 RT	771.69	
10	88+53.12	53.99 RT	772.36	*
11	88+52.48	50.96 RT	772.62	
12	88+52.18	35.96 RT	771.73	
13	88+50.25	28.00 RT	771.56	
14	88+30.02	28.40 RT	771.55	
15	88+45.02	28.10 RT	771.64	
16	88+50.18	36.00 RT	771.75	
17	88+50.38	46.00 RT	772.56	
18	88+50.48	51.00 RT	772.61	
19	88+52.29	56.06 RT	772.84	*
20	88+48.26	56.05 RT	772.81	*
21	88+45.48	51.10 RT	772.59	
22	88+45.38	46.10 RT	772.51	
23	88+45.18	36.10 RT	771.78	
24	88+30.18	36.40 RT	771.67	

*MATCH EXISTING GRADE

DETECTABLE WARNING

S.E. QUADRANT
IL 9 (W. MARKET ST.) & HOLTON DR.

LOCATION	STATION	OFFSET	ELEVATION	
1	89+01.30	21.00 RT	772.96	
2	88+85.10	25.18 RT	772.49	
3	88+74.06	35.00 RT	772.32	
4	00+75.21	54.00 RT	772.49	*
5	88+75.21	52.50 RT	772.40	*
6	88+75.93	35.00 RT	772.24	
7	88+85.83	26.49 RT	772.42	
8	89+01.30	22.50 RT	772.87	
9	88+86.11	27.00 RT	772.46	
10	88+76.67	35.00 RT	772.28	
11	88+92.71	35.00 RT	772.57	
12	88+92.71	45.00 RT	773.04	
13	88+92.85	50.00 RT	773.17	*
14	88+97.71	50.00 RT	773.37	*
15	88+97.71	45.00 RT	773.13	
16	88+97.71	35.00 RT	772.64	
17	89+07.71	35.00 RT	773.43	
18	89+12.71	35.00 RT	773.51	
19	88+22.71	35.00 RT	774.00	
20	88+22.71	27.00 RT	773.88	
21	89+12.71	27.00 RT	773.39	
22	89+07.71	27.00 RT	773.32	
23	88+97.71	27.00 RT	772.60	
24	88+92.71	27.00 RT	772.54	

*MATCH EXISTING GRADE

N

0 4 8 12
SCALE IN FEET

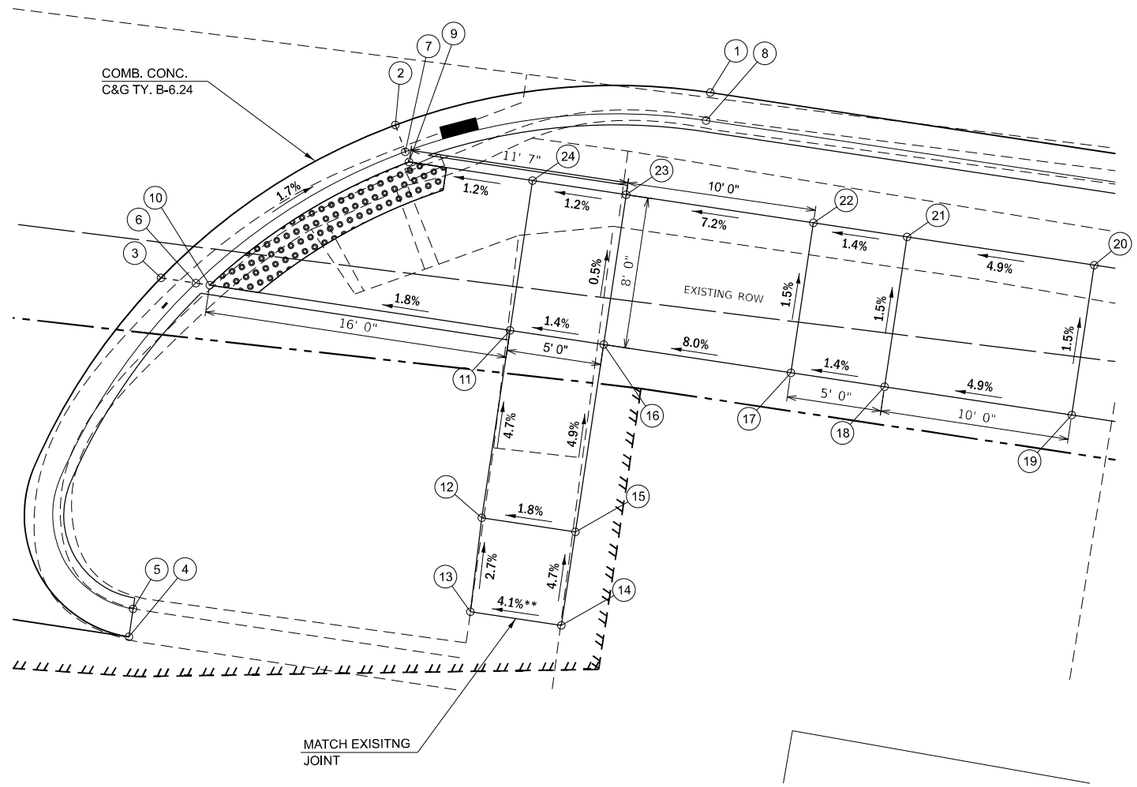

**NON-COMPLIANT CROSS SLOPE ON PANEL TRANSITIONING TO EXISTING SIDEWALK

DETECTABLE WARNING

NOTES:

1. EXISTING CONDITIONS MAY VARY SLIGHTLY IN THE FIELD. THE ENGINEER MAY ADJUST GRADES AND TIE IN LOCATIONS AS NECESSARY TO CONSTRUCT RAMPS. ANY ADJUSTMENTS MADE BY THE ENGINEER SHALL MEET ADA REQUIREMENTS FOR CURB RAMPS.
2. MAX. ALLOWABLE RUNNING SLOPE OF RAMP = 1:12 (8.3%)
3. MAX. ALLOWABLE SLOPE OF TURNING SPACE - 1:50 (2%)
4. MIN. ALLOWABLE WIDTH OF RAMP = 4'
5. MAX. ALLOWABLE CROSS SLOPE OF SIDEWALK OR LANDING = 1:50 (2%)
6. SEE INTERSECTION DETAILS FOR ADDITIONAL ROADWAY INFORMATION
7. SEE REMOVAL PLANS FOR MORE INFORMATION ON ADA REMOVAL ITEMS

Hutchison Engineering, Inc.

USER NAME = BDeCraene	DESIGNED -	REVISED -
	DRAWN -	REVISED -
PLOT SCALE = 8.000 ' / in.	CHECKED -	REVISED -
PLOT DATE = 10/17/2023	DATE -	REVISED -

STATE OF ILLINOIS
DEPARTMENT OF TRANSPORTATION

IL 9 (W. MARKET ST.) & HOLTON DR.
RAMP DETAILS

SCALE: 1"=4' | SHEET 12 OF 18 SHEETS | STA. | TO STA.

RTE.	SECTION	COUNTY	TOTAL SHEETS	SHEET NO.
693	(129)RS-4	McLEAN	218	93
		CONTRACT NO. 70855		
	ILLINOIS	FED. AID PROJECT		

MODEL: Default
FILE NAME: V:\4216 - IL 9 Bloomington\CADD\CADD Sheets\0570855-sht-detailHolton1.dgn

N.W. QUADRANT
IL 9 (W. MARKET ST.) & N. HINSHAW AVE.

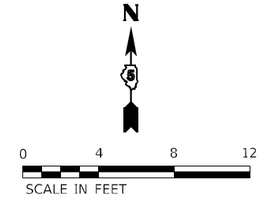

LOCATION	STATION	OFFSET	ELEVATION
1	90+25.18	37.76 LT	774.87
2	90+31.16	43.37 LT	774.90
3	90+30.07	44.39 LT	774.83
4	90+24.23	38.92 LT	774.80
5	90+23.86	39.37 LT	774.84
6	90+29.64	44.79 LT	774.87
7	90+36.08	62.46 LT	775.73
8	90+33.40	57.22 LT	775.65
9	90+26.40	47.80 LT	774.90
10	90+21.07	42.79 LT	774.87
11	90+50.85	34.06 LT	775.39
12	90+03.04	41.56 LT	775.51
13	90+16.00	48.98 LT	774.93
14	90+20.54	53.24 LT	774.97
15	90+26.49	61.26 LT	775.77
16	90+28.78	65.71 LT	775.85

*MATCH EXISTING GRADE

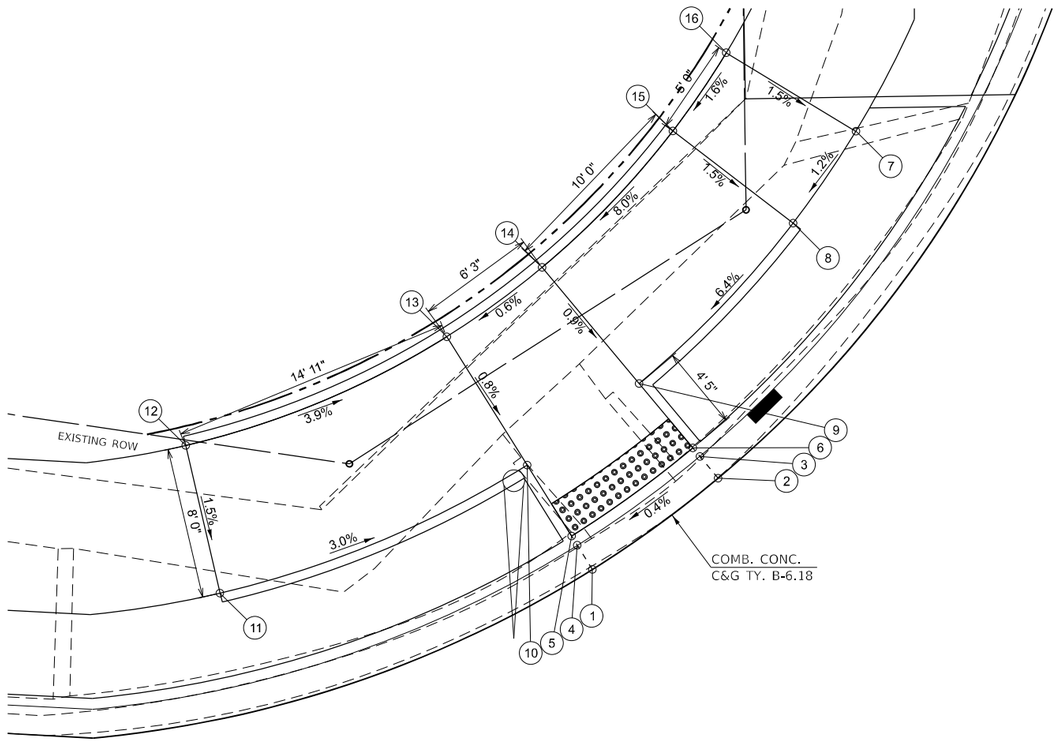

DETECTABLE WARNING

N.E. QUADRANT
IL 9 (W. MARKET ST.) & N. HINSHAW AVE.

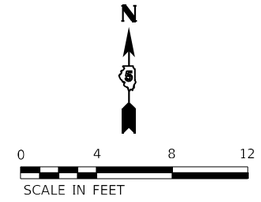

LOCATION	STATION	OFFSET	ELEVATION	
1	90+88.29	32.50 LT	774.81	
2	91+05.75	18.33 LT	774.53	
3	91+05.47	19.91 LT	774.47	
4	90+89.92	32.50 LT	774.74	
5	90+90.56	32.50 LT	774.78	
6	91+05.35	20.53 LT	774.51	
7	91+04.11	27.50 LT	774.65	
8	91+17.36	27.50 LT	775.23	
9	81+22.36	28.08 LT	775.17	*
10	91+22.41	32.96 LT	775.55	*
11	91+17.41	32.50 LT	775.32	
12	91+03.22	32.50 LT	774.74	
13	91+00.34	48.67 LT	776.05	
14	90+99.39	53.99 LT	776.15	
15	90+98.34	59.90 LT	776.11	
16	90+96.49	70.30 LT	775.68	
17	90+88.61	68.90 LT	775.55	
18	90+90.47	58.47 LT	775.96	
19	90+91.52	52.56 LT	776.04	
20	90+92.47	47.27 LT	775.96	
21	90+95.10	32.50 LT	774.76	

*MATCH EXISTING GRADE

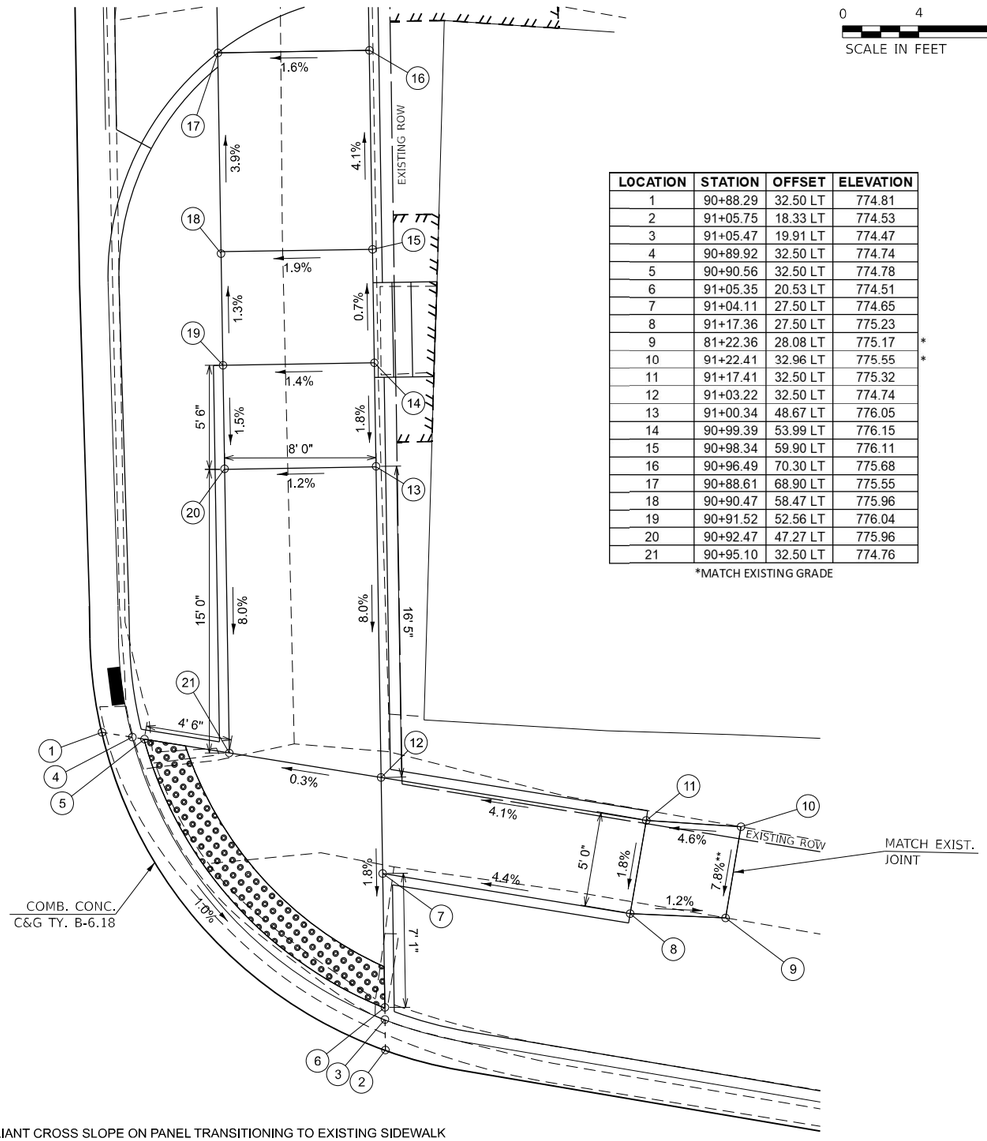

**NON-COMPLIANT CROSS SLOPE ON PANEL TRANSITIONING TO EXISTING SIDEWALK

DETECTABLE WARNING

NOTES:

1. EXISTING CONDITIONS MAY VARY SLIGHTLY IN THE FIELD. THE ENGINEER MAY ADJUST GRADES AND TIE IN LOCATIONS AS NECESSARY TO CONSTRUCT RAMPS. ANY ADJUSTMENTS MADE BY THE ENGINEER SHALL MEET ADA REQUIREMENTS FOR CURB RAMPS.
2. MAX. ALLOWABLE RUNNING SLOPE OF RAMP = 1:12 (8.3%)
3. MAX. ALLOWABLE SLOPE OF TURNING SPACE - 1:50 (2%)
4. MIN. ALLOWABLE WIDTH OF RAMP = 4'
5. MAX. ALLOWABLE CROSS SLOPE OF SIDEWALK OR LANDING = 1:50 (2%)
6. SEE INTERSECTION DETAILS FOR ADDITIONAL ROADWAY INFORMATION
7. SEE REMOVAL PLANS FOR MORE INFORMATION ON ADA REMOVAL ITEMS

Hutchison Engineering, Inc.

USER NAME = BDeCraene	DESIGNED -	REVISED -	
	DRAWN -	REVISED -	
PLOT SCALE = 8.000 ' / in.	CHECKED -	REVISED -	
PLOT DATE = 10/17/2023	DATE -	REVISED -	

STATE OF ILLINOIS
DEPARTMENT OF TRANSPORTATION

IL 9 (W. MARKET ST.) & N. HINSHAW AVE.
RAMP DETAILS

SCALE: 1"=4' | SHEET 13 OF 18 SHEETS | STA. | TO STA.

F.A.P. RTE.	SECTION	COUNTY	TOTAL SHEETS	SHEET NO.
693	(129)RS-4	McLEAN	218	94
		CONTRACT NO. 70855		
	ILLINOIS	FED. AID PROJECT		

MODEL: Default
FILE NAME: V:\4216 - IL 9 Bloomington\CADD\CADD Sheets\D570855-sht-dets1B-Hinshaw1.dgn

S.W. QUADRANT
IL 9 (W. MARKET ST.) & N. HINSHAW AVE.

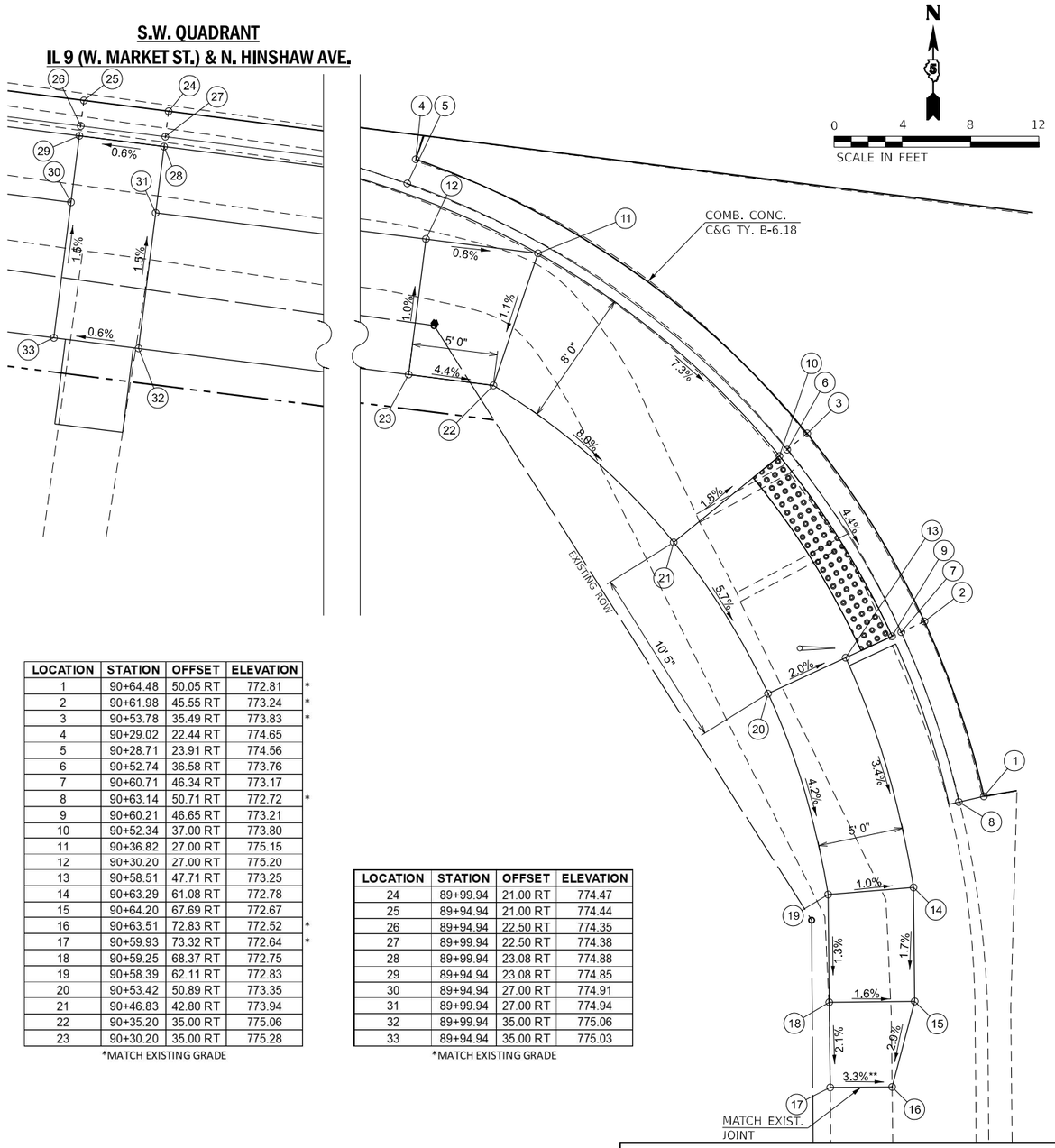

LOCATION	STATION	OFFSET	ELEVATION	
1	90+64.48	50.05 RT	772.81	*
2	90+61.98	45.55 RT	773.24	*
3	90+53.78	35.49 RT	773.83	*
4	90+29.02	22.44 RT	774.65	
5	90+28.71	23.91 RT	774.56	
6	90+52.74	36.58 RT	773.76	
7	90+60.71	46.34 RT	773.17	
8	90+63.14	50.71 RT	772.72	*
9	90+60.21	46.65 RT	773.21	
10	90+52.34	37.00 RT	773.80	
11	90+36.82	27.00 RT	775.15	
12	90+30.20	27.00 RT	775.20	
13	90+58.51	47.71 RT	773.25	
14	90+63.29	61.08 RT	772.78	
15	90+64.20	67.69 RT	772.67	
16	90+63.51	72.83 RT	772.52	*
17	90+59.93	73.32 RT	772.64	*
18	90+59.25	68.37 RT	772.75	
19	90+58.39	62.11 RT	772.83	
20	90+53.42	50.89 RT	773.35	
21	90+46.83	42.80 RT	773.94	
22	90+35.20	35.00 RT	775.06	
23	90+30.20	35.00 RT	775.28	

*MATCH EXISTING GRADE

LOCATION	STATION	OFFSET	ELEVATION
24	89+99.94	21.00 RT	774.47
25	89+94.94	21.00 RT	774.44
26	89+94.94	22.50 RT	774.35
27	89+99.94	22.50 RT	774.38
28	89+99.94	23.08 RT	774.88
29	89+94.94	23.08 RT	774.85
30	89+94.94	27.00 RT	774.91
31	89+99.94	27.00 RT	774.94
32	89+99.94	35.00 RT	775.06
33	89+94.94	35.00 RT	775.03

*MATCH EXISTING GRADE

DETECTABLE WARNING

**NON-COMPLIANT CROSS SLOPE ON PANEL TRANSITIONING TO EXISTING SIDEWALK

S.E. QUADRANT
IL 9 (W. MARKET ST.) & N. HINSHAW AVE.

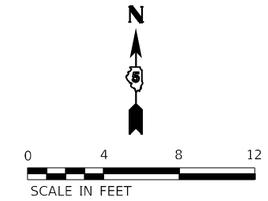

LOCATION	STATION	OFFSET	ELEVATION	
1	91+17.48	38.92 RT	772.86	*
2	91+20.28	35.44 RT	773.02	*
3	91+31.42	25.70 RT	773.45	*
4	91+41.79	20.32 RT	773.35	*
5	91+42.34	21.71 RT	773.26	*
6	91+32.25	26.95 RT	773.38	
7	91+22.29	35.44 RT	773.01	
8	91+18.68	39.81 RT	772.77	*
9	91+23.09	35.44 RT	773.07	
10	91+32.57	27.44 RT	773.42	
11	91+44.73	27.44 RT	773.53	
12	91+49.73	27.36 RT	773.62	*
13	91+49.89	31.33 RT	773.60	*
14	91+44.91	31.87 RT	773.45	
15	91+45.05	35.44 RT	773.39	
16	91+45.67	50.44 RT	772.90	
17	91+45.87	55.44 RT	772.85	
18	91+45.92	60.44 RT	772.77	*
19	91+42.11	60.44 RT	772.67	*
20	91+40.87	55.44 RT	772.81	
21	91+40.66	50.44 RT	772.86	
22	91+40.05	35.44 RT	773.30	
23	91+39.72	27.44 RT	773.44	

*MATCH EXISTING GRADE

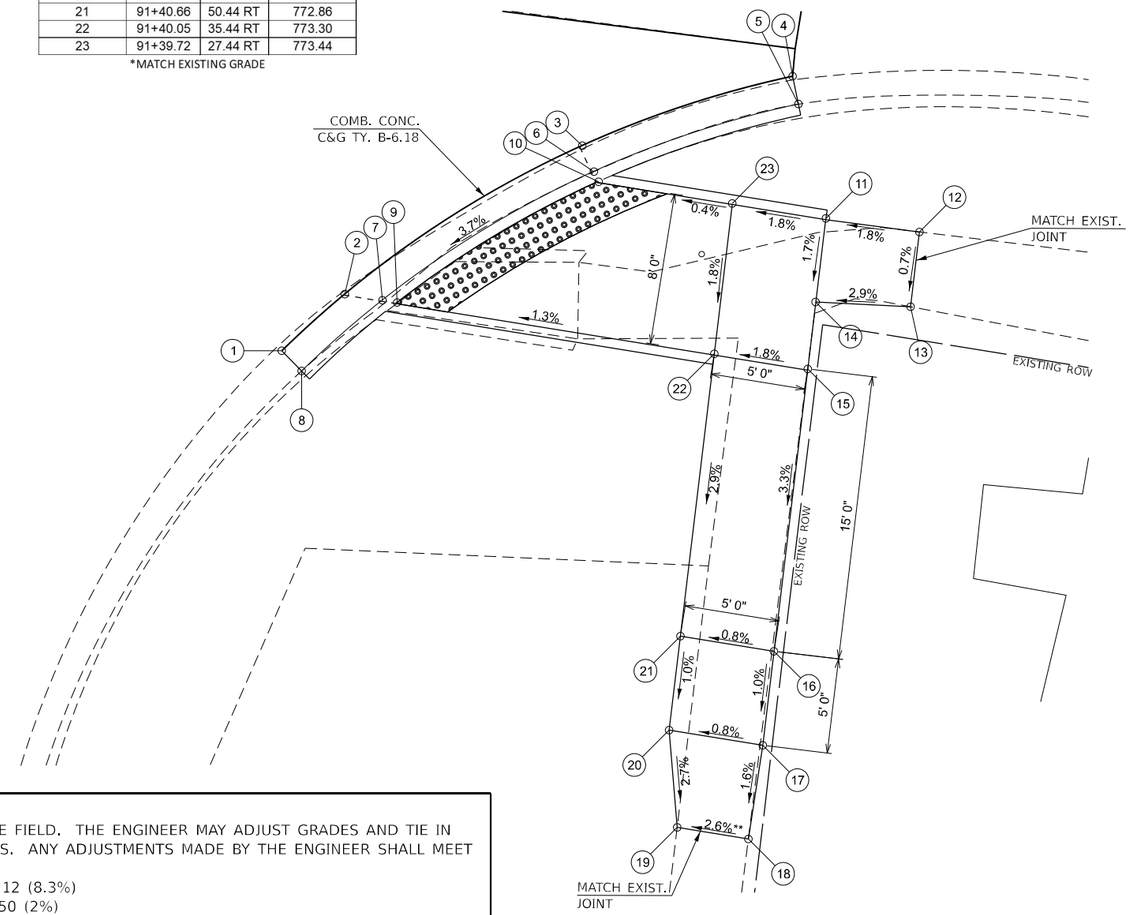

DETECTABLE WARNING

**NON-COMPLIANT CROSS SLOPE ON PANEL TRANSITIONING TO EXISTING SIDEWALK

NOTES:

1. EXISTING CONDITIONS MAY VARY SLIGHTLY IN THE FIELD. THE ENGINEER MAY ADJUST GRADES AND TIE IN LOCATIONS AS NECESSARY TO CONSTRUCT RAMPS. ANY ADJUSTMENTS MADE BY THE ENGINEER SHALL MEET ADA REQUIREMENTS FOR CURB RAMPS.
2. MAX. ALLOWABLE RUNNING SLOPE OF RAMP = 1:12 (8.3%)
3. MAX. ALLOWABLE SLOPE OF TURNING SPACE - 1:50 (2%)
4. MIN. ALLOWABLE WIDTH OF RAMP = 4'
5. MAX. ALLOWABLE CROSS SLOPE OF SIDEWALK OR LANDING = 1:50 (2%)
6. SEE INTERSECTION DETAILS FOR ADDITIONAL ROADWAY INFORMATION
7. SEE REMOVAL PLANS FOR MORE INFORMATION ON ADA REMOVAL ITEMS

Hutchison Engineering, Inc.

USER NAME = BDeCraene	DESIGNED -	REVISED -
	DRAWN -	REVISED -
PLOT SCALE = 8.000 ' / in.	CHECKED -	REVISED -
PLOT DATE = 10/17/2023	DATE -	REVISED -

STATE OF ILLINOIS
DEPARTMENT OF TRANSPORTATION

IL 9 (W. MARKET ST.) & N. HINSHAW AVE.
RAMP DETAILS

SCALE: 1"=4' | SHEET 14 OF 18 SHEETS | STA. | TO STA.

F.A.P. RTE.	SECTION	COUNTY	TOTAL SHEETS	SHEET NO.
693	(129)RS-4	McLEAN	218	95
		CONTRACT NO. 70855		
	ILLINOIS	FED. AID PROJECT		

MODEL: Default
FILE NAME: V:\4216 - IL 9 Bloomington\CADD\CADD Sheets\D570855-sht-detail-Hinshaw2.dgn

N.W. BUS STOP
IL 9 (W. MARKET ST.) & N. HINSHAW AVE.

LOCATION	STATION	OFFSET	ELEVATION
1	89+08.76	22.49 LT	773.44
2	89+13.82	22.40 LT	773.55
3	89+13.82	23.90 LT	773.46
4	89+08.76	23.99 LT	773.35
5	89+08.76	24.95 LT	773.85
6	79+13.76	24.91 LT	773.96
7	89+18.82	28.33 LT	774.11
8	89+13.82	28.42 LT	774.01
9	89+08.82	28.50 LT	773.91
10	89+03.82	28.59 LT	773.81
11	89+03.96	36.59 LT	773.93
12	89+08.96	36.50 LT	774.03
13	89+13.86	36.42 LT	774.13
14	89+18.86	36.33 LT	774.23

*MATCH EXISTING GRADE

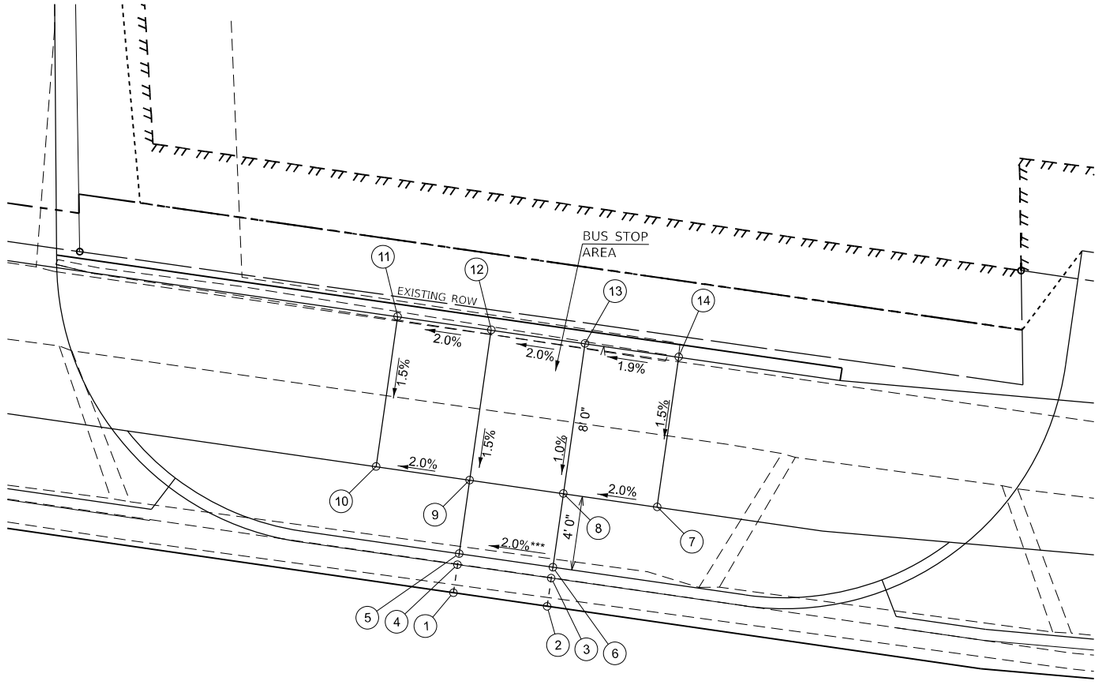

***RAMP CROSS SLOPE MATCHES LONGITUDINAL GRADE OF MARKET STREET

NOTES:

1. EXISTING CONDITIONS MAY VARY SLIGHTLY IN THE FIELD. THE ENGINEER MAY ADJUST GRADES AND TIE IN LOCATIONS AS NECESSARY TO CONSTRUCT RAMPS. ANY ADJUSTMENTS MADE BY THE ENGINEER SHALL MEET ADA REQUIREMENTS FOR CURB RAMPS.
2. MAX. ALLOWABLE RUNNING SLOPE OF RAMP = 1:12 (8.3%)
3. MAX. ALLOWABLE SLOPE OF TURNING SPACE - 1:50 (2%)
4. MIN. ALLOWABLE WIDTH OF RAMP = 4'
5. MAX. ALLOWABLE CROSS SLOPE OF SIDEWALK OR LANDING = 1:50 (2%)
6. SEE INTERSECTION DETAILS FOR ADDITIONAL ROADWAY INFORMATION
7. SEE REMOVAL PLANS FOR MORE INFORMATION ON ADA REMOVAL ITEMS

MODEL: Default
FILE NAME: V:\4216 - IL 9 Bloomington\CADD\CADD Sheets\0570855-dht-detail4hinshaw3.dgn

Hutchison Engineering, Inc.

USER NAME = BDeCraene	DESIGNED -	REVISED -
	DRAWN -	REVISED -
PLOT SCALE = 8.000 ' / in.	CHECKED -	REVISED -
PLOT DATE = 10/17/2023	DATE -	REVISED -

STATE OF ILLINOIS
DEPARTMENT OF TRANSPORTATION

IL 9 (W. MARKET ST.) & N. HINSHAW AVE.
RAMP DETAILS

SCALE: 1"=4' | SHEET 15 OF 18 SHEETS | STA. | TO STA.

F.A.P. RTE.	SECTION	COUNTY	TOTAL SHEETS	SHEET NO.
693	(129)RS-4	McLEAN	218	96
		CONTRACT NO. 70855		
	ILLINOIS	FED. AID PROJECT		

N.E. QUADRANT
W. MULBERRY ST. & WHITE OAK RD.

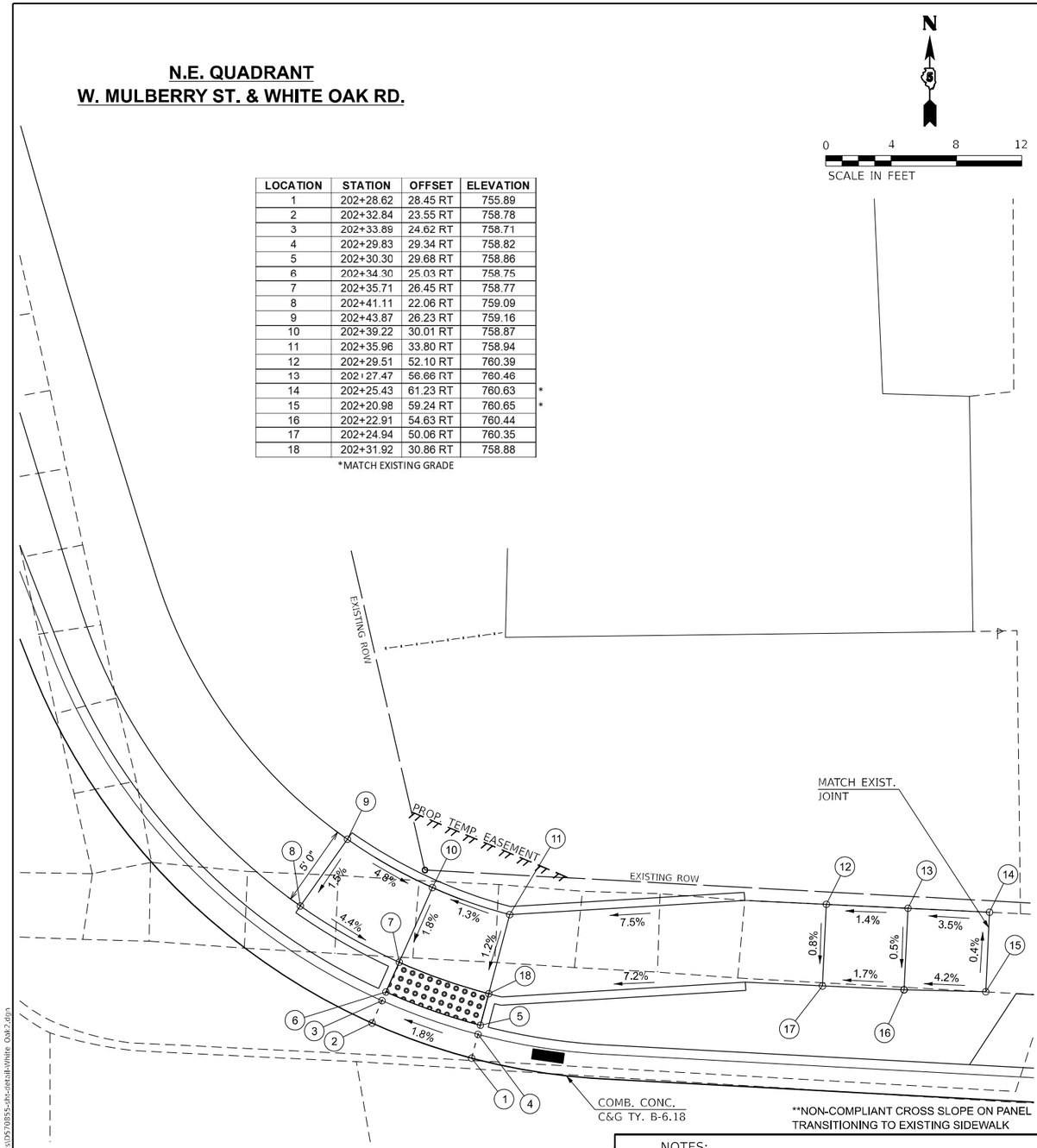

LOCATION	STATION	OFFSET	ELEVATION	
1	202+28.62	28.45 RT	755.89	
2	202+32.84	23.55 RT	758.78	
3	202+33.89	24.62 RT	758.71	
4	202+29.83	29.34 RT	758.82	
5	202+30.30	29.68 RT	758.86	
6	202+34.30	25.03 RT	758.75	
7	202+35.71	26.45 RT	758.77	
8	202+41.11	22.06 RT	759.09	
9	202+43.87	26.23 RT	759.16	
10	202+39.22	30.01 RT	758.87	
11	202+35.96	33.80 RT	758.94	
12	202+29.51	52.10 RT	760.39	
13	202+27.47	56.66 RT	760.46	
14	202+25.43	61.23 RT	760.63	*
15	202+20.98	59.24 RT	760.65	*
16	202+22.91	54.63 RT	760.44	
17	202+24.94	50.06 RT	760.35	
18	202+31.92	30.86 RT	758.88	

*MATCH EXISTING GRADE

**NON-COMPLIANT CROSS SLOPE ON PANEL TRANSITIONING TO EXISTING SIDEWALK

S.E. QUADRANT
W. MULBERRY ST. & WHITE OAK RD.

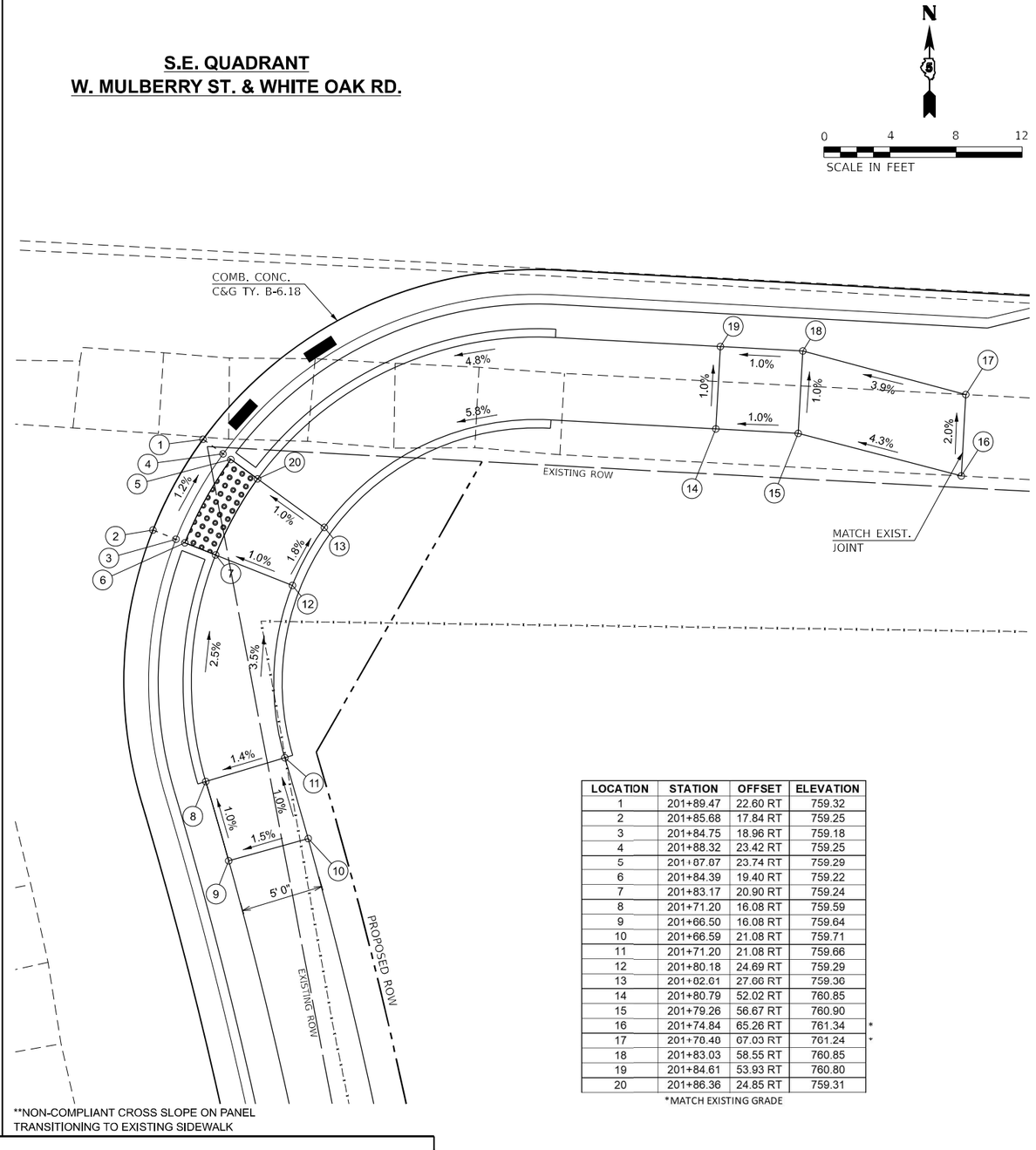

LOCATION	STATION	OFFSET	ELEVATION	
1	201+89.47	22.60 RT	759.32	
2	201+85.68	17.84 RT	759.25	
3	201+84.75	18.96 RT	759.18	
4	201+88.32	23.42 RT	759.25	
5	201+87.87	23.74 RT	759.29	
6	201+84.39	19.40 RT	759.22	
7	201+83.17	20.90 RT	759.24	
8	201+71.20	16.08 RT	759.59	
9	201+66.50	16.08 RT	759.64	
10	201+66.59	21.08 RT	759.71	
11	201+71.20	21.08 RT	759.66	
12	201+80.18	24.69 RT	759.29	
13	201+02.61	27.66 RT	759.36	
14	201+80.79	52.02 RT	760.85	
15	201+79.26	56.67 RT	760.90	
16	201+74.84	65.26 RT	761.34	*
17	201+70.40	67.03 RT	761.24	*
18	201+83.03	58.55 RT	760.85	
19	201+84.61	53.93 RT	760.80	
20	201+86.36	24.85 RT	759.31	

*MATCH EXISTING GRADE

**NON-COMPLIANT CROSS SLOPE ON PANEL TRANSITIONING TO EXISTING SIDEWALK

DETECTABLE WARNING

DETECTABLE WARNING

NOTES:

1. EXISTING CONDITIONS MAY VARY SLIGHTLY IN THE FIELD. THE ENGINEER MAY ADJUST GRADES AND TIE IN LOCATIONS AS NECESSARY TO CONSTRUCT RAMPS. ANY ADJUSTMENTS MADE BY THE ENGINEER SHALL MEET ADA REQUIREMENTS FOR CURB RAMPS.
2. MAX. ALLOWABLE RUNNING SLOPE OF RAMP = 1:12 (8.3%)
3. MAX. ALLOWABLE SLOPE OF TURNING SPACE - 1:50 (2%)
4. MIN. ALLOWABLE WIDTH OF RAMP = 4'
5. MAX. ALLOWABLE CROSS SLOPE OF SIDEWALK OR LANDING = 1:50 (2%)
6. SEE INTERSECTION DETAILS FOR ADDITIONAL ROADWAY INFORMATION
7. SEE REMOVAL PLANS FOR MORE INFORMATION ON ADA REMOVAL ITEMS

MODEL: Default
FILE NAME: V:\d216 - IL 9 Bloomington\CADD\CADD Sheets\0570855-sht-detail-White Oak2.dgn

Hutchison Engineering, Inc.

USER NAME = BDeCraene	DESIGNED -	REVISED -
	DRAWN -	REVISED -
PLOT SCALE = 8.000 ' / in.	CHECKED -	REVISED -
PLOT DATE = 10/17/2023	DATE -	REVISED -

STATE OF ILLINOIS
DEPARTMENT OF TRANSPORTATION

W. MULBERRY ST. & WHITE OAK RD.
RAMP DETAILS

SCALE: 1"=4' | SHEET 16 OF 18 SHEETS | STA. | TO STA.

F.A.P. RTE.	SECTION	COUNTY	TOTAL SHEETS	SHEET NO.
693	(129)RS-4	McLEAN	218	97
		CONTRACT NO. 70855		
	ILLINOIS FED. AID PROJECT			

N.W. QUADRANT
N. HINSHAW AVE. & W. MULBERRY ST.

LOCATION	STATION	OFFSET	ELEVATION	
1	2+85.78	54.13 LT	774.94	*
2	2+84.48	32.00 LT	775.59	
3	2+96.22	17.27 LT	775.96	
4	3+01.27	16.60 LT	776.04	*
5	3+01.27	18.10 LT	775.95	*
6	2+96.34	18.82 LT	775.89	
7	2+85.98	32.00 LT	775.52	
8	2+87.28	54.03 LT	774.85	*
9	2+86.57	32.00 LT	775.57	
10	2+96.69	19.42 LT	775.94	
11	3+16.73	26.85 LT	776.52	*
12	3+11.73	24.00 LT	776.48	
13	2+96.73	24.00 LT	775.87	
14	2+92.31	32.00 LT	775.67	
15	2+92.72	37.54 LT	775.78	*
16	2+97.71	37.17 LT	775.87	*
17	2+97.32	32.00 LT	775.77	
18	3+11.73	32.00 LT	776.56	
19	3+16.73	31.87 LT	776.58	*

*MATCH EXISTING GRADE

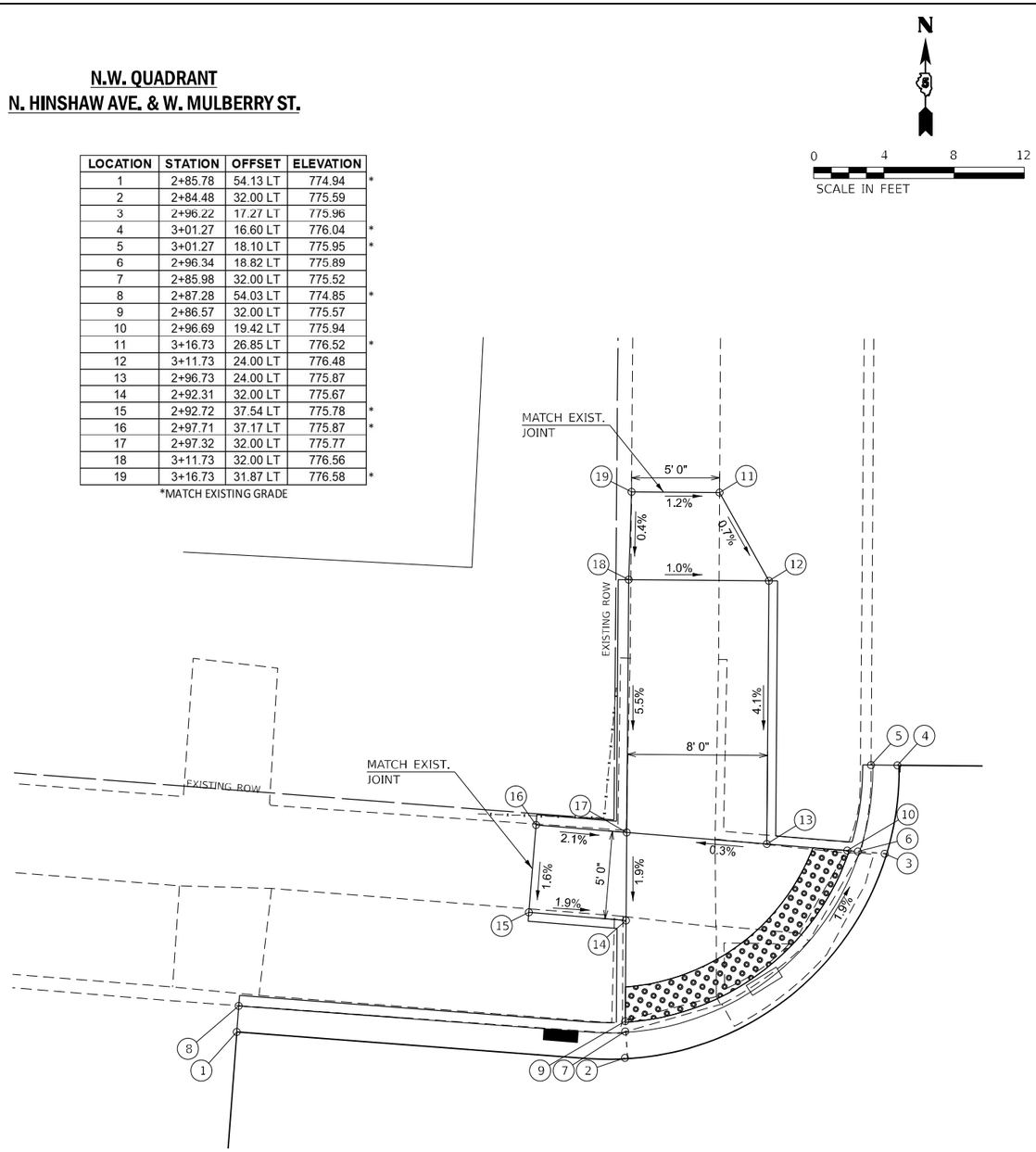

N.E. QUADRANT
N. HINSHAW AVE. & W. MULBERRY ST.

LOCATION	STATION	OFFSET	ELEVATION	
1	2+98.18	16.50 RT	776.05	*
2	2+93.30	16.61 RT	776.02	
3	2+79.58	32.00 RT	776.00	
4	2+79.09	37.30 RT	776.26	*
5	2+80.60	37.28 RT	776.17	*
6	2+81.09	32.00 RT	775.93	
7	2+93.19	18.14 RT	775.95	
8	2+98.18	18.00 RT	775.96	*
9	2+93.15	18.74 RT	776.00	
10	2+81.68	32.00 RT	775.97	
11	2+85.13	58.80 RT	777.49	*
12	2+85.50	53.82 RT	777.45	
13	2+86.26	43.85 RT	776.70	
14	2+86.63	38.66 RT	776.61	
15	2+87.14	32.00 RT	776.09	
16	2+92.75	24.00 RT	776.07	
17	3+07.16	24.00 RT	777.21	
18	3+12.16	27.27 RT	777.33	*
19	3+12.16	32.00 RT	777.52	*
20	3+07.16	32.00 RT	777.35	
21	2+92.16	32.00 RT	776.19	
22	2+91.62	39.23 RT	776.71	
23	2+91.24	44.22 RT	776.78	
24	2+90.49	54.19 RT	777.55	
25	2+90.11	59.18 RT	777.64	*

*MATCH EXISTING GRADE

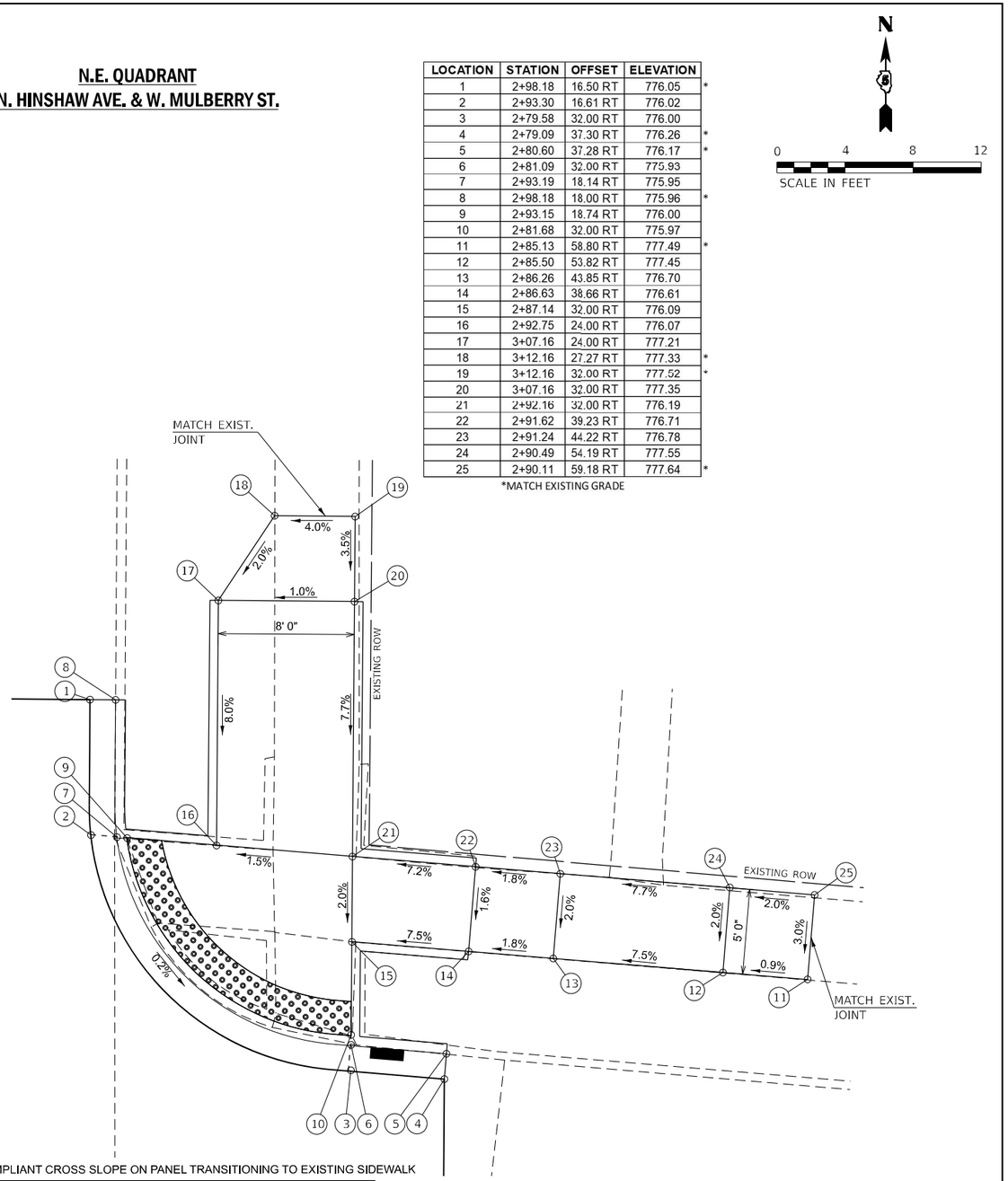

**NON-COMPLIANT CROSS SLOPE ON PANEL TRANSITIONING TO EXISTING SIDEWALK

DETECTABLE WARNING

NOTES:

1. EXISTING CONDITIONS MAY VARY SLIGHTLY IN THE FIELD. THE ENGINEER MAY ADJUST GRADES AND TIE IN LOCATIONS AS NECESSARY TO CONSTRUCT RAMPS. ANY ADJUSTMENTS MADE BY THE ENGINEER SHALL MEET ADA REQUIREMENTS FOR CURB RAMPS.
2. MAX. ALLOWABLE RUNNING SLOPE OF RAMP = 1:12 (8.3%)
3. MAX. ALLOWABLE SLOPE OF TURNING SPACE - 1:50 (2%)
4. MIN. ALLOWABLE WIDTH OF RAMP = 4'
5. MAX. ALLOWABLE CROSS SLOPE OF SIDEWALK OR LANDING = 1:50 (2%)
6. SEE INTERSECTION DETAILS FOR ADDITIONAL ROADWAY INFORMATION
7. SEE REMOVAL PLANS FOR MORE INFORMATION ON ADA REMOVAL ITEMS

DETECTABLE WARNING

Hutchison Engineering, Inc.

USER NAME = BDeCraene	DESIGNED -	REVISED -
	DRAWN -	REVISED -
PLOT SCALE = 8.000 ' / in.	CHECKED -	REVISED -
PLOT DATE = 10/17/2023	DATE -	REVISED -

STATE OF ILLINOIS
DEPARTMENT OF TRANSPORTATION

N. HINSHAW AVE. & W. MULBERRY ST.
RAMP DETAILS

SCALE: 1"=4' | SHEET 17 OF 18 SHEETS | STA. | TO STA.

F.A.P. RTE.	SECTION	COUNTY	TOTAL SHEETS	SHEET NO.
693	(129)RS-4	McLEAN	218	98
		CONTRACT NO. 70855		
	ILLINOIS FED. AID PROJECT			

MODEL: Default
FILE NAME: V:\d216 - IL 9 Bloomington\CADD\CADD Sheets\0570855-sht-detail-Mulberry.dgn

S.W. QUADRANT
N. HINSHAW AVE. & W. MULBERRY ST.

LOCATION	STATION	OFFSET	ELEVATION	
1	2+47.35	16.98 LT	775.87	
2	2+61.48	32.00 LT	775.56	
3	2+63.08	55.62 LT	774.83	*
4	2+61.58	55.72 LT	774.74	*
5	2+59.97	32.00 LT	775.49	
6	2+47.47	18.52 LT	775.80	
7	2+47.51	19.11 LT	775.84	
8	2+59.39	32.00 LT	775.53	
9	2+54.00	38.92 LT	775.99	*
10	2+53.49	32.00 LT	775.64	
11	2+47.88	24.00 LT	775.79	
12	2+38.48	24.00 LT	776.32	
13	2+38.48	32.00 LT	776.40	
14	2+48.47	32.00 LT	775.74	
15	2+49.02	39.29 LT	776.07	*

*MATCH EXISTING GRADE

N

0 4 8 12

SCALE IN FEET

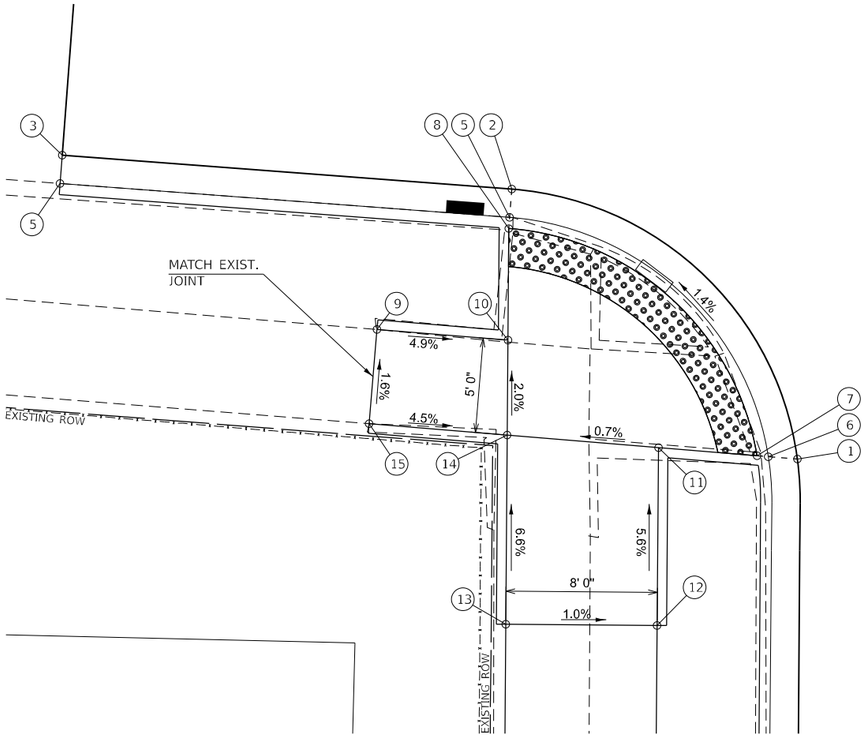

DETECTABLE WARNING

S.E. QUADRANT
N. HINSHAW AVE. & W. MULBERRY ST.

N

0 4 8 12

SCALE IN FEET

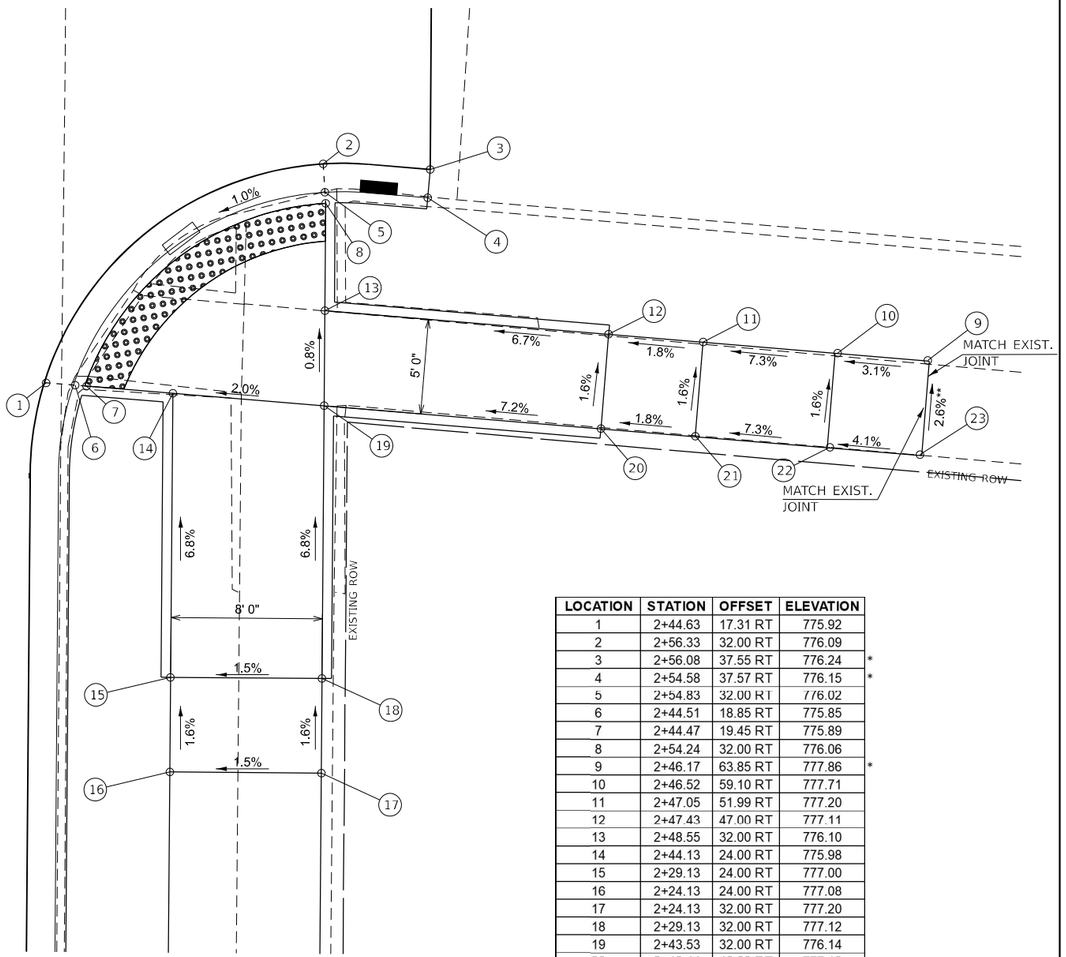

LOCATION	STATION	OFFSET	ELEVATION	
1	2+44.63	17.31 RT	775.92	
2	2+56.33	32.00 RT	776.09	
3	2+56.08	37.55 RT	776.24	*
4	2+54.58	37.57 RT	776.15	*
5	2+54.83	32.00 RT	776.02	
6	2+44.51	18.85 RT	775.85	
7	2+44.47	19.45 RT	775.89	
8	2+54.24	32.00 RT	776.06	
9	2+46.17	63.85 RT	777.86	*
10	2+46.52	59.10 RT	777.71	
11	2+47.05	51.99 RT	777.20	
12	2+47.43	47.00 RT	777.11	
13	2+48.55	32.00 RT	776.10	
14	2+44.13	24.00 RT	775.98	
15	2+29.13	24.00 RT	777.00	
16	2+24.13	24.00 RT	777.08	
17	2+24.13	32.00 RT	777.20	
18	2+29.13	32.00 RT	777.12	
19	2+43.53	32.00 RT	776.14	
20	2+42.44	46.63 RT	777.19	
21	2+42.07	51.61 RT	777.28	
22	2+41.54	58.73 RT	777.79	
23	2+41.18	63.48 RT	777.99	*

*MATCH EXISTING GRADE

DETECTABLE WARNING

**NON-COMPLIANT CROSS SLOPE ON PANEL TRANSITIONING TO EXISTING SIDEWALK

NOTES:

1. EXISTING CONDITIONS MAY VARY SLIGHTLY IN THE FIELD. THE ENGINEER MAY ADJUST GRADES AND TIE IN LOCATIONS AS NECESSARY TO CONSTRUCT RAMPS. ANY ADJUSTMENTS MADE BY THE ENGINEER SHALL MEET ADA REQUIREMENTS FOR CURB RAMPS.
2. MAX. ALLOWABLE RUNNING SLOPE OF RAMP = 1:12 (8.3%)
3. MAX. ALLOWABLE SLOPE OF TURNING SPACE - 1:50 (2%)
4. MIN. ALLOWABLE WIDTH OF RAMP = 4'
5. MAX. ALLOWABLE CROSS SLOPE OF SIDEWALK OR LANDING = 1:50 (2%)
6. SEE INTERSECTION DETAILS FOR ADDITIONAL ROADWAY INFORMATION
7. SEE REMOVAL PLANS FOR MORE INFORMATION ON ADA REMOVAL ITEMS

MODEL: Default
FILE NAME: V:\4216 - IL 9 Bloomington\CADD\CADD Sheets\0570855-sht-detail-Mulberry2.dgn

Hutchison Engineering, Inc.

USER NAME = BDeCraene	DESIGNED -	REVISED -
	DRAWN -	REVISED -
PLOT SCALE = 8.000 ' / in.	CHECKED -	REVISED -
PLOT DATE = 10/17/2023	DATE -	REVISED -

STATE OF ILLINOIS
DEPARTMENT OF TRANSPORTATION

N. HINSHAW AVE. & W. MULBERRY ST.
RAMP DETAILS

SCALE: 1"=4' | SHEET 18 OF 18 SHEETS | STA. | TO STA.

F.A.P. RTE.	SECTION	COUNTY	TOTAL SHEETS	SHEET NO.
693	(129)RS-4	McLEAN	218	99
		CONTRACT NO. 70855		
	ILLINOIS	FED. AID PROJECT		

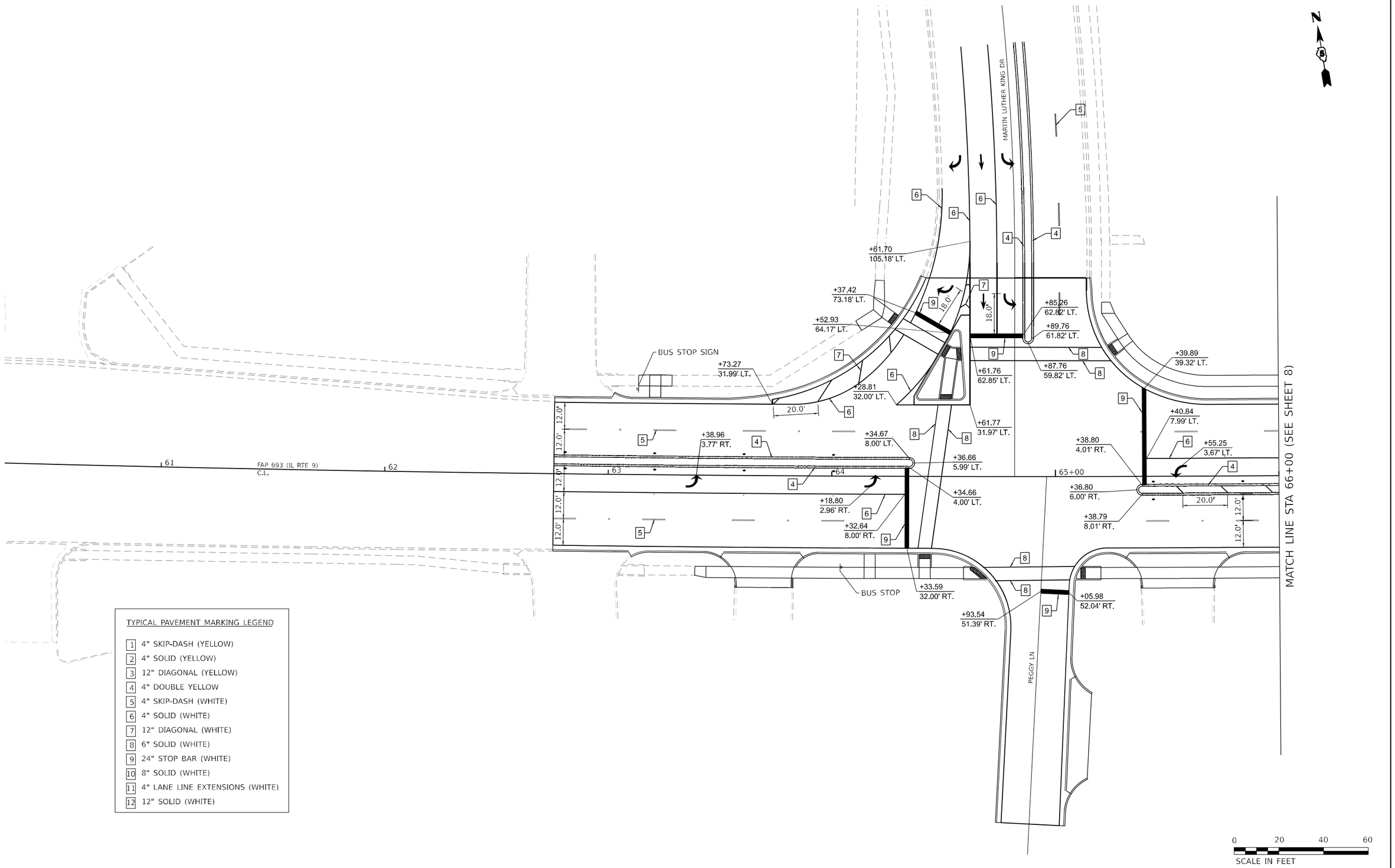

TYPICAL PAVEMENT MARKING LEGEND

1	4" SKIP-DASH (YELLOW)
2	4" SOLID (YELLOW)
3	12" DIAGONAL (YELLOW)
4	4" DOUBLE YELLOW
5	4" SKIP-DASH (WHITE)
6	4" SOLID (WHITE)
7	12" DIAGONAL (WHITE)
8	6" SOLID (WHITE)
9	24" STOP BAR (WHITE)
10	8" SOLID (WHITE)
11	4" LANE LINE EXTENSIONS (WHITE)
12	12" SOLID (WHITE)

MODEL: Default
FILE NAME: c:\projectwise.bentley.com\ke-pw-91\Documents\IDOT Projects\17-1137.00 GNB\0_IDOT\CAD Sheets\D570855-pmk-sgn007.dgn

Kaskaskia Engineering Group, LLC
299 E. Main St., Suite 100
Belleville, Illinois 62220
618.233.5077 phone
618.233.5077 fax
www.kaskaskiaeng.com
Illinois Professional Design Firm
Professional Engineering Group
184.007773
20.000016

USER NAME = msecrest	DESIGNED - MMS	REVISED -	
	DRAWN - MMS	REVISED -	
PLOT SCALE = 40.000 ' / in.	CHECKED - EJL	REVISED -	
PLOT DATE = 10/11/2023	DATE - 10-02-2023	REVISED -	

STATE OF ILLINOIS
DEPARTMENT OF TRANSPORTATION

FAP 693 (IL RTE 9)
PROPOSED PAVEMENT MARKINGS AND SIGNS

SCALE: 1" = 20' | SHEET 1 OF 10 SHEETS | STA. | TO STA.

F.A.P. RTE.	SECTION	COUNTY	TOTAL SHEETS	SHEET NO.
693	(129,109)RS3(16,4,1)	MCLEAN	218	100
		CONTRACT NO. 70855		
	ILLINOIS	FED. AID PROJECT		

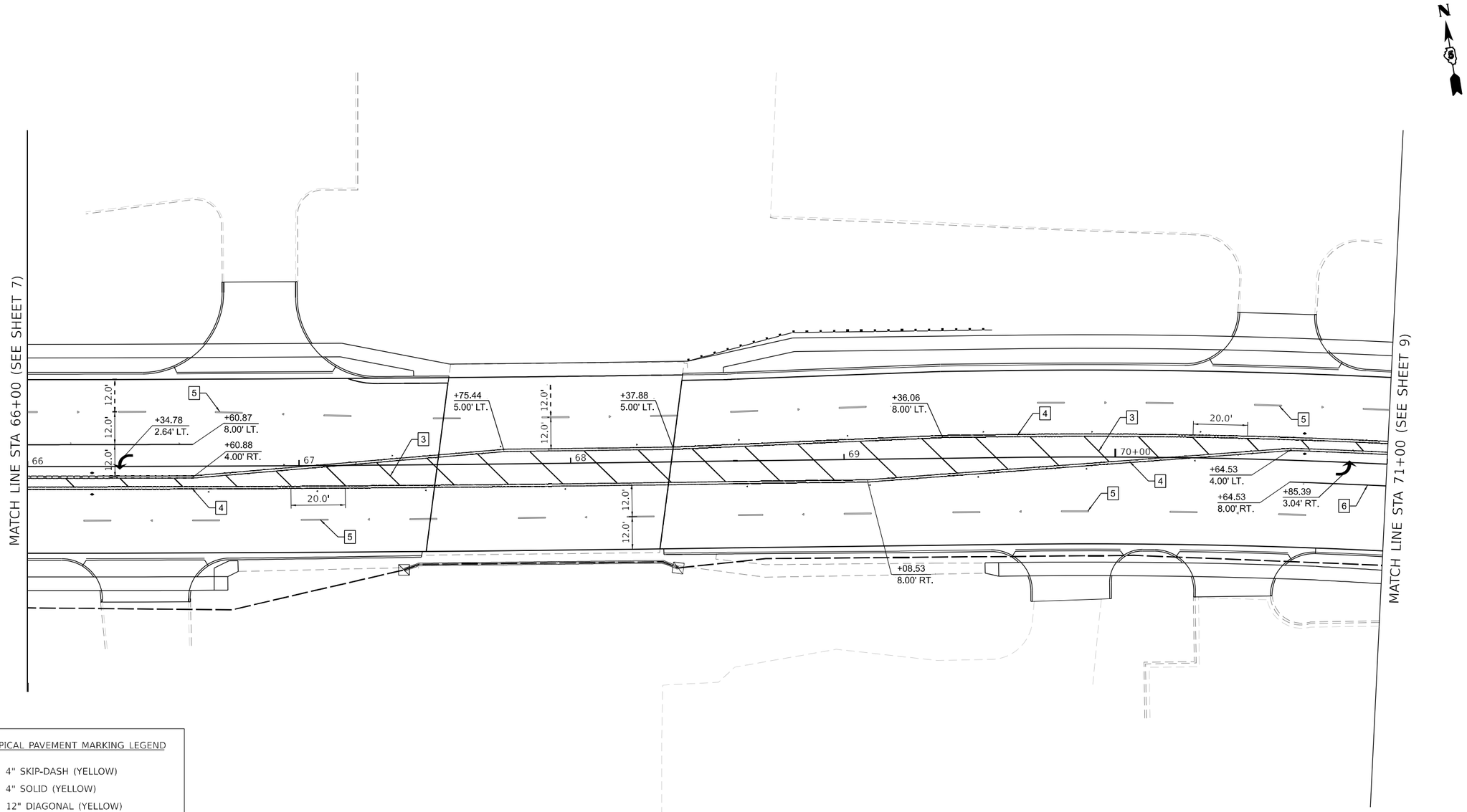

TYPICAL PAVEMENT MARKING LEGEND

1. 4" SKIP-DASH (YELLOW)
2. 4" SOLID (YELLOW)
3. 12" DIAGONAL (YELLOW)
4. 4" DOUBLE YELLOW
5. 4" SKIP-DASH (WHITE)
6. 4" SOLID (WHITE)
7. 12" DIAGONAL (WHITE)
8. 6" SOLID (WHITE)
9. 24" STOP BAR (WHITE)
10. 8" SOLID (WHITE)
11. 4" LANE LINE EXTENSIONS (WHITE)
12. 12" SOLID (WHITE)

FOR INFORMATION NOT SHOWN SEE DISTRICT 5 DETAIL 780AAA

0 20 40 60
SCALE IN FEET

MODEL: Default
FILE NAME: pw://keg-pw.bentley.com:keg-pw-01/Documents/IDOT Projects/17-1137.00 ORD/0 IDOT/CAD_Sheets/D570855-pmk-sgn008.dgn

Kaskaskia Engineering Group, LLC
PROFESSIONAL REGISTRATION
Illinois Professional Design Firm
Professional Engineering Group

USER NAME = msecrest	DESIGNED - MMS	REVISED -	
	DRAWN - MMS	REVISED -	
PLOT SCALE = 40.000 ' / in.	CHECKED - EJL	REVISED -	
PLOT DATE = 10/11/2023	DATE - 10-02-2023	REVISED -	

STATE OF ILLINOIS
DEPARTMENT OF TRANSPORTATION

FAP 693 (IL RTE 9)
PROPOSED PAVEMENT MARKINGS AND SIGNS

SCALE: 1" = 20' | SHEET 2 OF 10 SHEETS | STA. TO STA.

F.A.P. RTE.	SECTION	COUNTY	TOTAL SHEETS	SHEET NO.
693	(129,109)RS3(16,4,1)	MCLEAN	218	101
		CONTRACT NO. 70855		
		ILLINOIS FED. AID PROJECT		

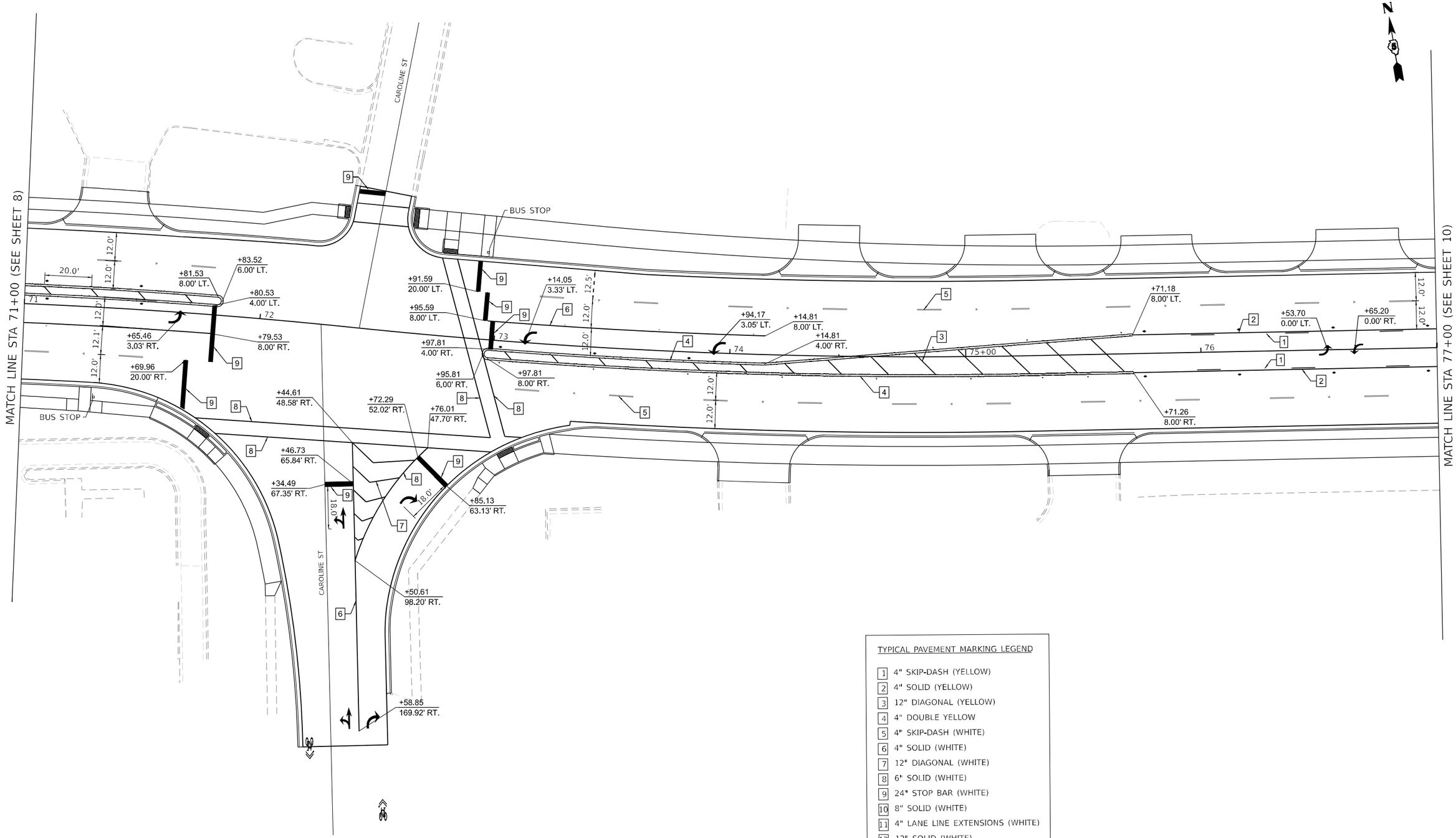

TYPICAL PAVEMENT MARKING LEGEND

1. 4" SKIP-DASH (YELLOW)
2. 4" SOLID (YELLOW)
3. 12" DIAGONAL (YELLOW)
4. 4" DOUBLE YELLOW
5. 4" SKIP-DASH (WHITE)
6. 4" SOLID (WHITE)
7. 12" DIAGONAL (WHITE)
8. 6" SOLID (WHITE)
9. 24" STOP BAR (WHITE)
10. 8" SOLID (WHITE)
11. 4" LANE LINE EXTENSIONS (WHITE)
12. 12" SOLID (WHITE)

MODEL: Default
FILE NAME: pw://keg-pw.bentley.com:keg-pw-01/Documents/IDOT Projects/17-1137.00 ORD/0_IDOT/CAD_Sheets/D570855-pmk-sgn009.dgn

Kaskaskia Engineering Group, LLC
200 E. Main St., Suite 100
Belleville, Illinois 62220
618.233.5077 phone
618.233.5077 fax
www.kaskaskiaeng.com
PROFESSIONAL REGISTRATIONS
Illinois Professional Design Firm
Professional Engineering Group
LICENSE NO.
184.001773
20.5000186

USER NAME = msecrest	DESIGNED - MMS	REVISED -	
	DRAWN - MMS	REVISED -	
PLOT SCALE = 40.000 ' / in.	CHECKED - EJL	REVISED -	
PLOT DATE = 10/11/2023	DATE - 10-02-2023	REVISED -	

STATE OF ILLINOIS
DEPARTMENT OF TRANSPORTATION

FAP 693 (IL RTE 9)
PROPOSED PAVEMENT MARKINGS AND SIGNS

SCALE: 1" = 20' | SHEET 3 OF 10 SHEETS | STA. TO STA.

F.A.P. RTE.	SECTION	COUNTY	TOTAL SHEETS	SHEET NO.
693	(129,109)RS3(16,4,1)	MCLEAN	218	102
		CONTRACT NO. 70855		
		ILLINOIS	FED. AID PROJECT	

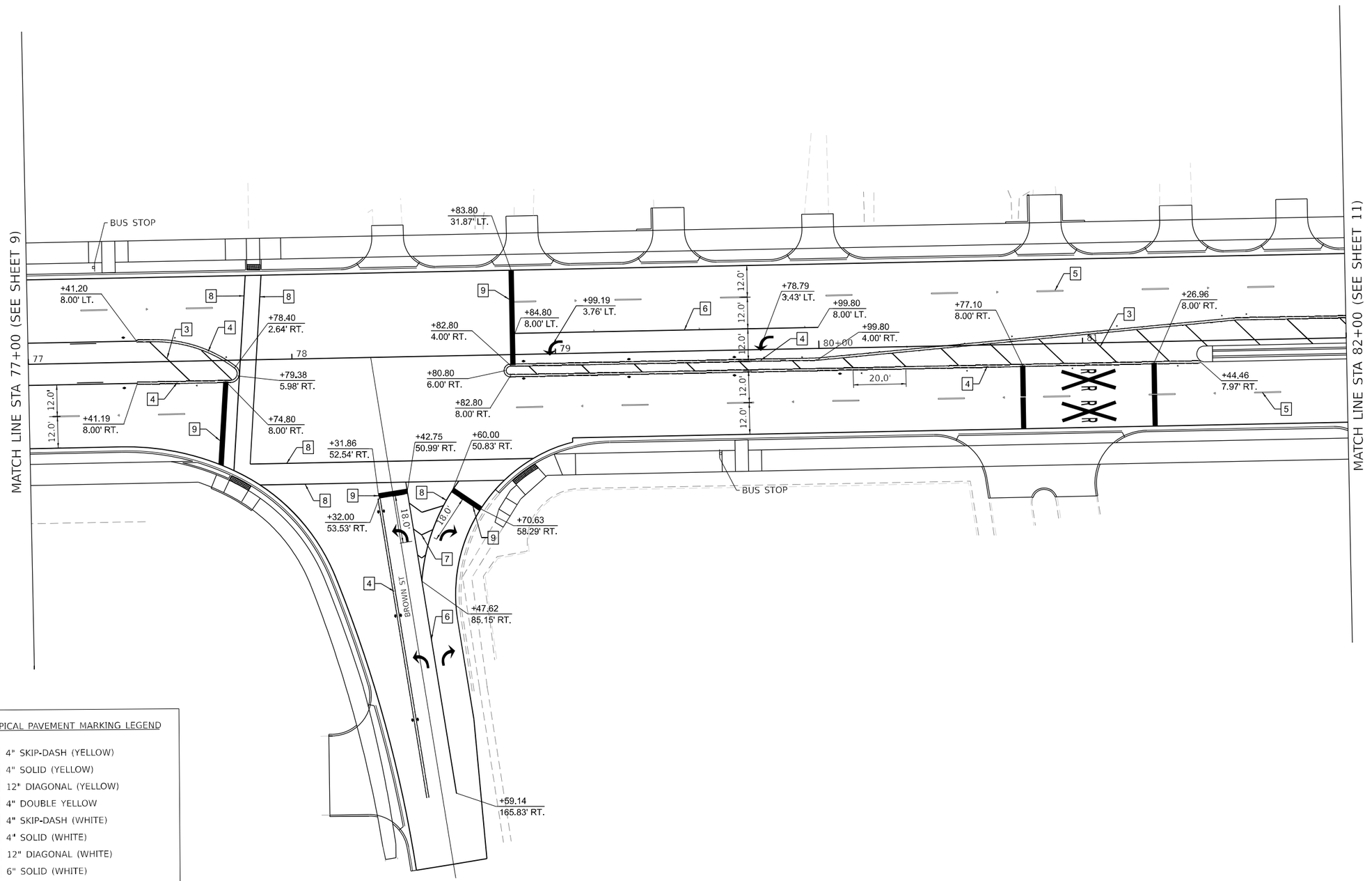

TYPICAL PAVEMENT MARKING LEGEND

1. 4" SKIP-DASH (YELLOW)
2. 4" SOLID (YELLOW)
3. 12" DIAGONAL (YELLOW)
4. 4" DOUBLE YELLOW
5. 4" SKIP-DASH (WHITE)
6. 4" SOLID (WHITE)
7. 12" DIAGONAL (WHITE)
8. 6" SOLID (WHITE)
9. 24" STOP BAR (WHITE)
10. 8" SOLID (WHITE)
11. 4" LANE LINE EXTENSIONS (WHITE)
12. 12" SOLID (WHITE)

0 20 40 60
SCALE IN FEET

MODEL: Default
FILE NAME: pw://keg-pw.bentley.com:keg-pw-01/Documents/IDOT Projects/17-1137.00 ORD/0_IDOT/CAD_Sheets/D570855-pmk-sgn010.dgn

Kaskaskia Engineering Group, LLC
PROFESSIONAL REGISTRATION
Illinois Professional Design Firm
Professional Engineering Group
LICENSE NO.
184.001773
20.0000186

USER NAME = msecrest	DESIGNED - MMS	REVISED -	
	DRAWN - MMS	REVISED -	
PLOT SCALE = 40.000 ' / in.	CHECKED - EJL	REVISED -	
PLOT DATE = 10/11/2023	DATE - 10-02-2023	REVISED -	

STATE OF ILLINOIS
DEPARTMENT OF TRANSPORTATION

FAP 693 (IL RTE 9)
PROPOSED PAVEMENT MARKINGS AND SIGNS

SCALE: 1" = 20' | SHEET 4 OF 10 SHEETS | STA. TO STA.

F.A.P. RTE.	SECTION	COUNTY	TOTAL SHEETS	SHEET NO.
693	(129,109)RS3(16,4,1)	MCLEAN	218	103
		CONTRACT NO. 70855		
		ILLINOIS	FED. AID PROJECT	

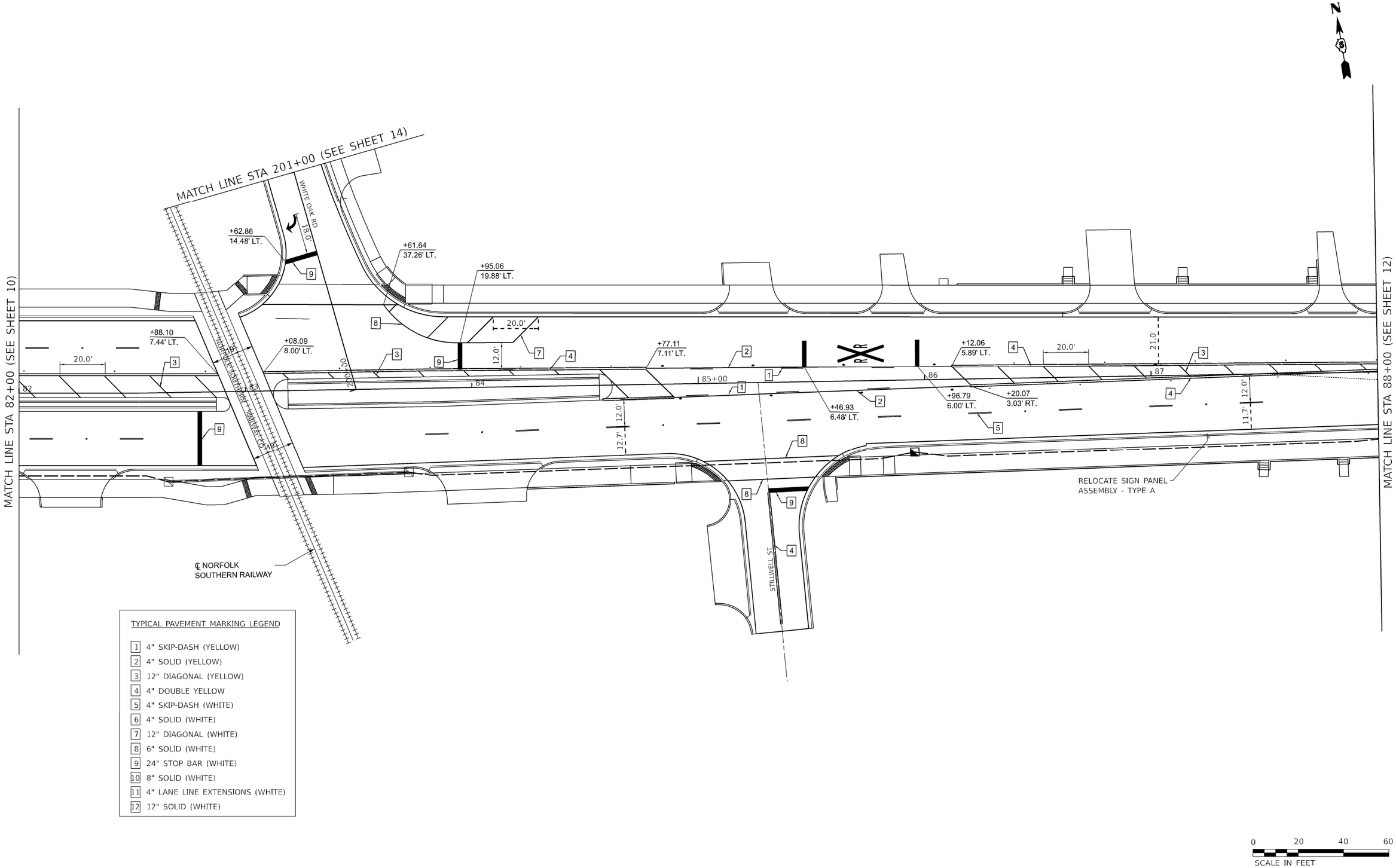

TYPICAL PAVEMENT MARKING LEGEND

1. 4" SKIP-DASH (YELLOW)
2. 4" SOLID (YELLOW)
3. 12" DIAGONAL (YELLOW)
4. 4" DOUBLE YELLOW
5. 4" SKIP-DASH (WHITE)
6. 4" SOLID (WHITE)
7. 12" DIAGONAL (WHITE)
8. 6" SOLID (WHITE)
9. 24" STOP BAR (WHITE)
10. 8" SOLID (WHITE)
11. 4" LANE LINE EXTENSIONS (WHITE)
12. 12" SOLID (WHITE)

MODEL: Default
FILE NAME: V:\4216 - IL 9 Bloomington\Subconsultant Coordination\From Kaskaskia\Final Files\D570855-sht008-TS_Market_MLK_CAD\D570855-pmk-sgn011.dgn

Kaskaskia Engineering Group, LLC
PROFESSIONAL REGISTRATION: Illinois Professional Design Firm, Professional Engineering Group
LICENSE NO.: 184.019773, 20-5000166

USER NAME = BDeCraene	DESIGNED - MMS	REVISED - 11/16/2023	
	DRAWN - MMS	REVISED -	
PLOT SCALE = 40.004 ' / in.	CHECKED - EJL	REVISED -	
PLOT DATE = 11/17/2023	DATE - 10-02-2023	REVISED -	

STATE OF ILLINOIS
DEPARTMENT OF TRANSPORTATION

FAP 693 (IL RTE 9)
PROPOSED PAVEMENT MARKINGS AND SIGNS

SCALE: 1" = 20' | SHEET 5 OF 10 SHEETS | STA. TO STA.

F.A.P. RTE.	SECTION	COUNTY	TOTAL SHEETS	SHEET NO.
693	(129,109)RS3(16,4,1)	MCLEAN	218	104
		CONTRACT NO. 70855		
		ILLINOIS	FED. AID PROJECT	

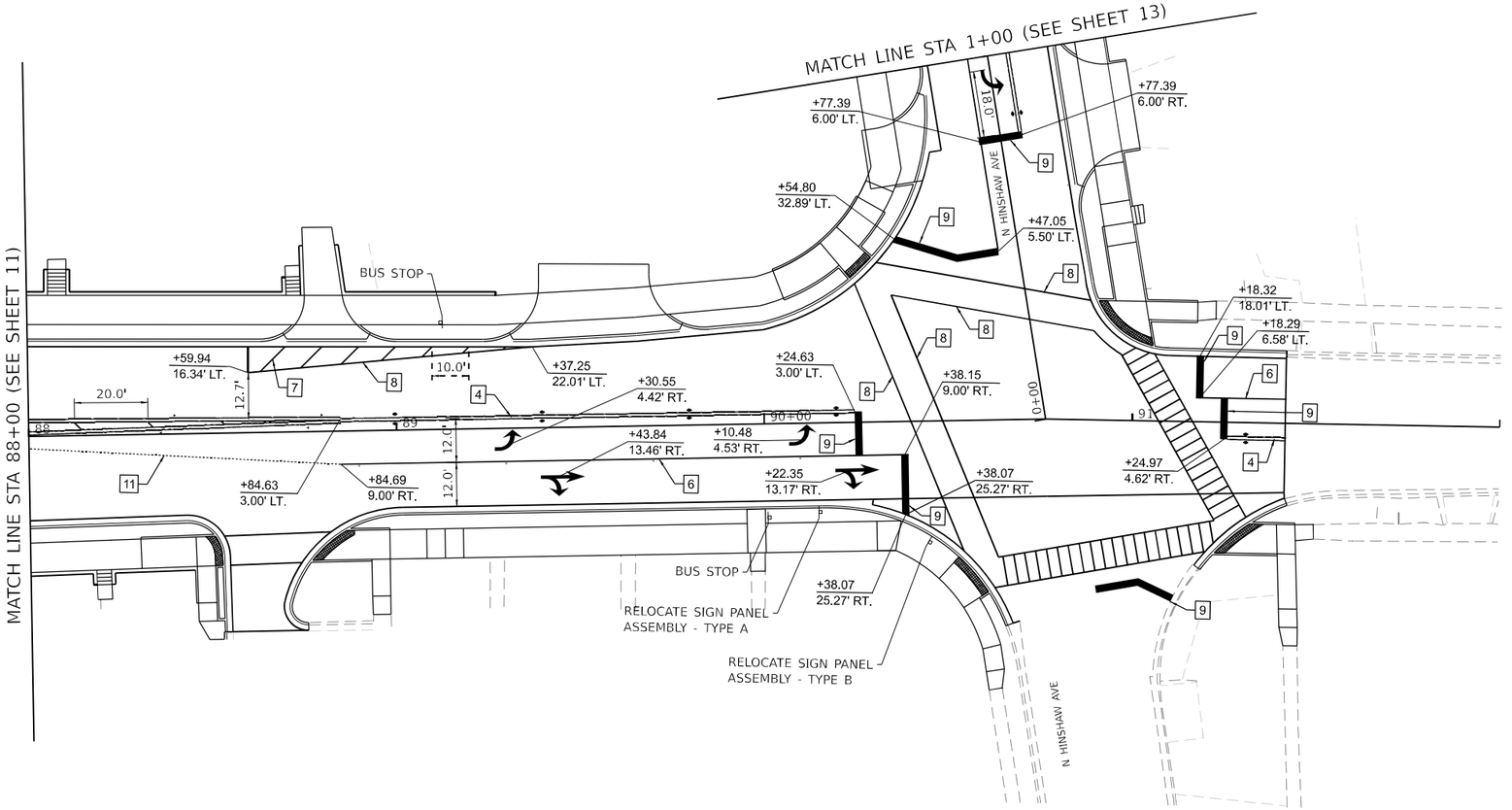

TYPICAL PAVEMENT MARKING LEGEND

1	4" SKIP-DASH (YELLOW)
2	4" SOLID (YELLOW)
3	12" DIAGONAL (YELLOW)
4	4" DOUBLE YELLOW
5	4" SKIP-DASH (WHITE)
6	4" SOLID (WHITE)
7	12" DIAGONAL (WHITE)
8	6" SOLID (WHITE)
9	24" STOP BAR (WHITE)
10	8" SOLID (WHITE)
11	4" LANE LINE EXTENSIONS (WHITE)
12	12" SOLID (WHITE)

CONTINENTAL CROSSWALK

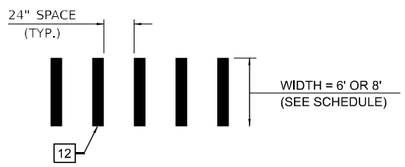

CONTINENTAL CROSSWALK MARKINGS TO BE PLACED PARALLEL TO LANE LINE MARKINGS.

0 20 40 60
SCALE IN FEET

MODEL: Default
FILE NAME: pw:\\fed-pw.bentley.com:fed-pw01\Documents\IDOT Projects\17-11370_00_ORD\0_IDOT\CAD_Sheets\0957085S_pmk-sht012.dgn

Kaskaskia Engineering Group, LLC
700 E. Main St., Suite 100, Belleville, Illinois 62220, 618.233.5077 phone, 618.233.5077 fax, www.kaskaskiaeng.com
PROFESSIONAL REGISTRATIONS: Illinois Professional Design Firm: 184.007572; Professional Engineering Group: 20-3480046
LICENSE NO.

USER NAME = mscerest	DESIGNED - MMS	REVISED -	STATE OF ILLINOIS DEPARTMENT OF TRANSPORTATION	FAP 693 (IL RTE 9) PROPOSED PAVEMENT MARKINGS AND SIGNS	
	DRAWN - MMS	REVISED -			
PLOT SCALE = 40.000 ' / in.	CHECKED - EJL	REVISED -			
PLOT DATE = 10/11/2023	DATE - 10-02-2023	REVISED -		SCALE: 1" = 20' SHEET 6 OF 10 SHEETS STA. TO STA.	

F.A.P. RTE.	SECTION	COUNTY	TOTAL SHEETS	SHEET NO.
693	(129,109)RS3(16,4,1)	MCLEAN	218	105
		CONTRACT NO. 70855		
	ILLINOIS	FED. AID PROJECT		

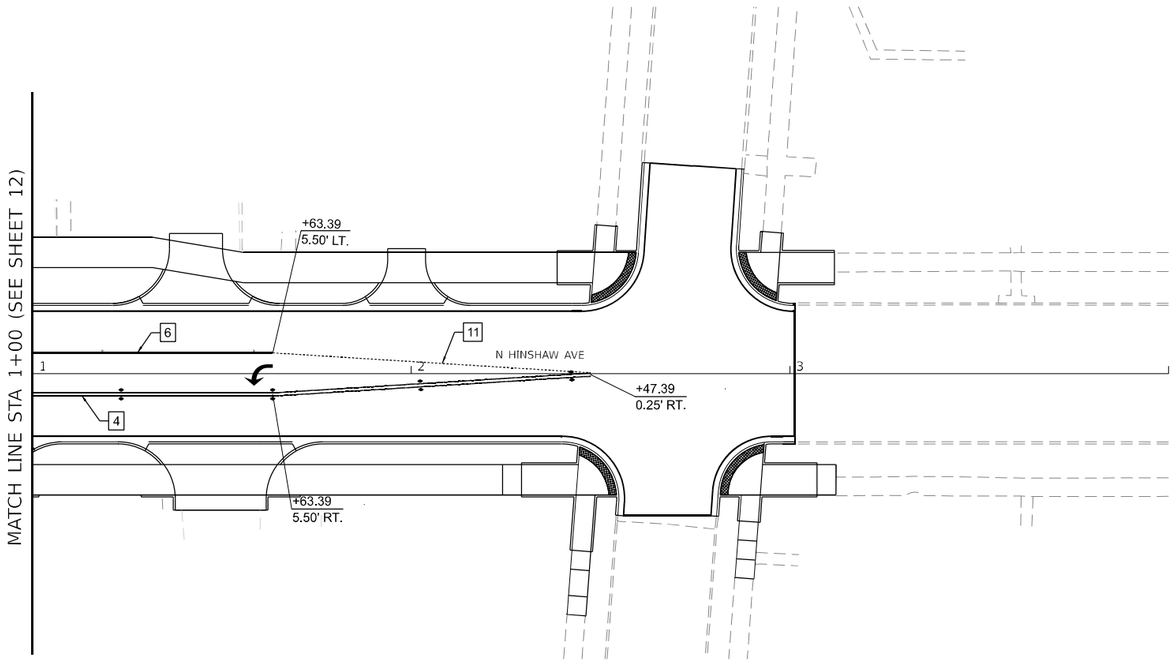

TYPICAL PAVEMENT MARKING LEGEND

1	4" SKIP-DASH (YELLOW)
2	4" SOLID (YELLOW)
3	12" DIAGONAL (YELLOW)
4	4" DOUBLE YELLOW
5	4" SKIP-DASH (WHITE)
6	4" SOLID (WHITE)
7	12" DIAGONAL (WHITE)
8	6" SOLID (WHITE)
9	24" STOP BAR (WHITE)
10	8" SOLID (WHITE)
11	4" LANE LINE EXTENSIONS (WHITE)
12	12" SOLID (WHITE)

0 20 40 60
SCALE IN FEET

MODEL: Default
FILE NAME: pw:\\kaskaskia.bentley.com:kaskaskia-pw-01\Documents\IDOT Projects\17-11370_00_0R0\0_IDOT\CAD_Sheets\D572085-pmk-sgn013.dgn

Kaskaskia Engineering Group, LLC
200 E. Main St., Suite 100, Belleville, Illinois 62220, 618.233.5077 phone, 618.233.5075 fax, www.kaskaskiaeng.com
PROFESSIONAL REGISTRATIONS: Illinois Professional Design Firm; Professional Engineering Group
LICENSE NO.: 184.005772; 20-3000166

USER NAME = mscerest	DESIGNED - MMS	REVISED -			
	DRAWN - MMS	REVISED -			
PLOT SCALE = 40.000 ' / in.	CHECKED - EJL	REVISED -			
PLOT DATE = 10/11/2023	DATE - 10-02-2023	REVISED -			

STATE OF ILLINOIS
DEPARTMENT OF TRANSPORTATION

FAP 693 (IL RTE 9)
PROPOSED PAVEMENT MARKINGS AND SIGNS

SCALE: 1" = 20' | SHEET 7 OF 10 SHEETS | STA. | TO STA.

F.A.P. RTE.	SECTION	COUNTY	TOTAL SHEETS	SHEET NO.
693	(129,109)RS3(16,4,1)	MCLEAN	218	106
		CONTRACT NO. 70855		
	ILLINOIS FED. AID PROJECT			

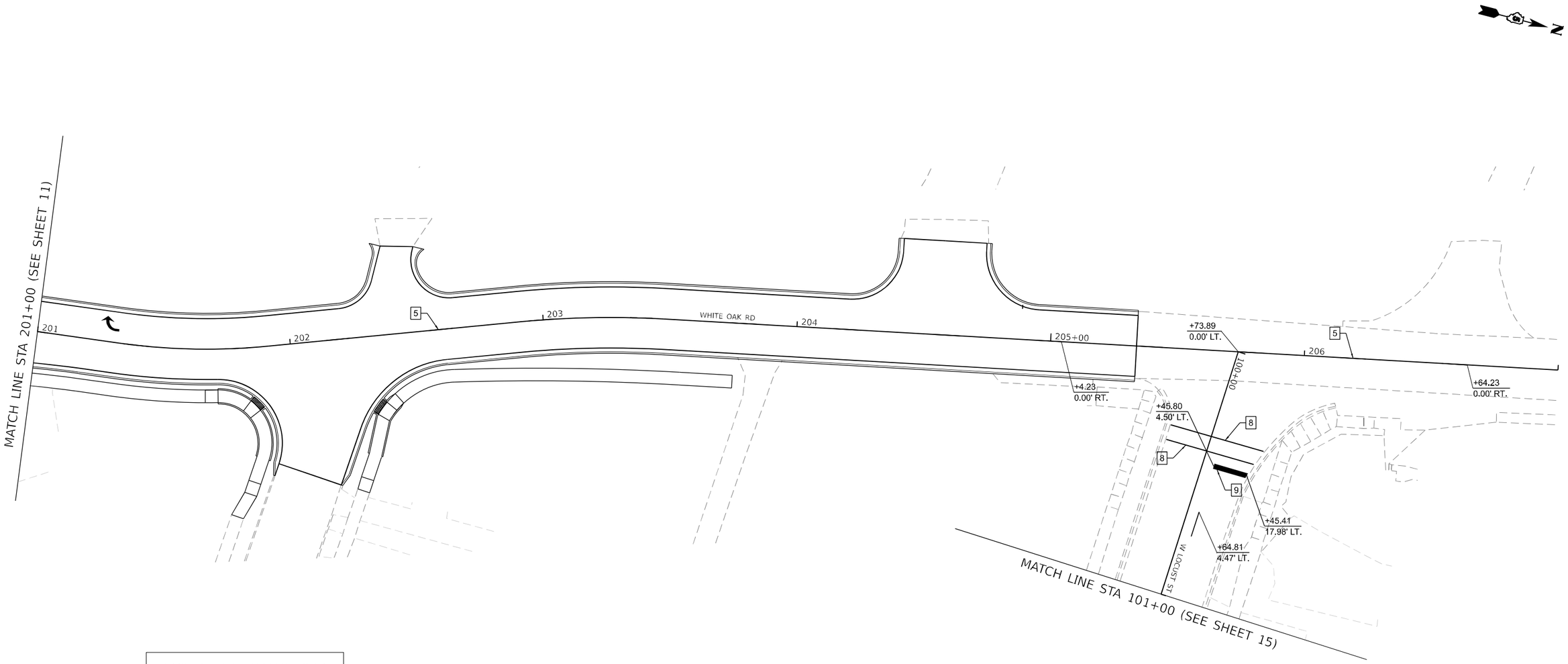

TYPICAL PAVEMENT MARKING LEGEND

1. 4" SKIP-DASH (YELLOW)
2. 4" SOLID (YELLOW)
3. 12" DIAGONAL (YELLOW)
4. 4" DOUBLE YELLOW
5. 4" SKIP-DASH (WHITE)
6. 4" SOLID (WHITE)
7. 12" DIAGONAL (WHITE)
8. 6" SOLID (WHITE)
9. 24" STOP BAR (WHITE)
10. 8" SOLID (WHITE)
11. 4" LANE LINE EXTENSIONS (WHITE)
12. 12" SOLID (WHITE)

NOTE: REMOVE EXISTING PAVEMENT MARKINGS ON LOCUST BETWEEN WHITE OAK AND RD AND HINSHAW PRIOR TO PLACING PROPOSED PAVEMENT MARKINGS

0 20 40 60
SCALE IN FEET

MODEL: Default
FILE NAME: pw://keg-pw.bentley.com:keg-pw-01/Documents/IDOT Projects/17-1137.00 ORD/0_IDOT/CAD_Sheets/D570855-pmk-sgn014.dgn

Kaskaskia Engineering Group, LLC
PROFESSIONAL REGISTRATIONS
Illinois Professional Design Firm
Professional Engineering Group
LICENSE NO.
184.004773
20.6000186

USER NAME = msecrest	DESIGNED - MMS	REVISED -	
	DRAWN - MMS	REVISED -	
PLOT SCALE = 40.000 ' / in.	CHECKED - EJL	REVISED -	
PLOT DATE = 10/11/2023	DATE - 10-02-2023	REVISED -	

STATE OF ILLINOIS
DEPARTMENT OF TRANSPORTATION

FAP 693 (IL RTE 9)
PROPOSED PAVEMENT MARKINGS AND SIGNS

SCALE: 1" = 20' | SHEET 8 OF 10 SHEETS | STA. TO STA.

F.A.P. RTE.	SECTION	COUNTY	TOTAL SHEETS	SHEET NO.
693	(129,109)RS3(16,4,1)	MCLEAN	218	107
		CONTRACT NO. 70855		
		ILLINOIS	FED. AID PROJECT	

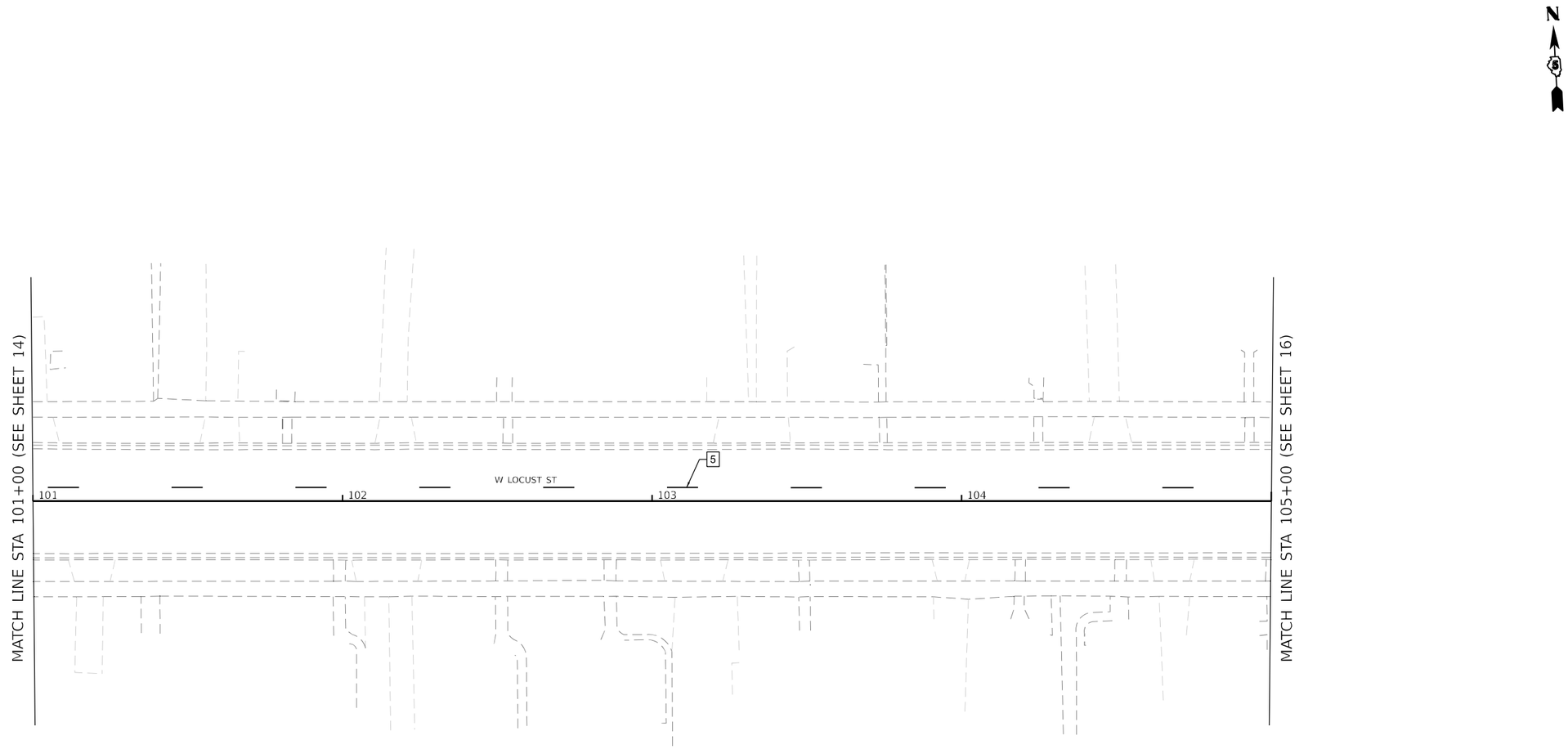

TYPICAL PAVEMENT MARKING LEGEND

1. 4" SKIP-DASH (YELLOW)
2. 4" SOLID (YELLOW)
3. 12" DIAGONAL (YELLOW)
4. 4" DOUBLE YELLOW
5. 4" SKIP-DASH (WHITE)
6. 4" SOLID (WHITE)
7. 12" DIAGONAL (WHITE)
8. 6" SOLID (WHITE)
9. 24" STOP BAR (WHITE)
10. 8" SOLID (WHITE)
11. 4" LANE LINE EXTENSIONS (WHITE)
12. 12" SOLID (WHITE)

NOTE: REMOVE EXISTING PAVEMENT MARKINGS ON LOCUST BETWEEN WHITE OAK AND RD AND HINSHAW PRIOR TO PLACING PROPOSED PAVEMENT MARKINGS

0 20 40 60
SCALE IN FEET

MODEL: Default
FILE NAME: pw://keg-pw.bentley.com:keg-pw-01/Documents/IDOT Projects/17-1137.00 ORD/0_IDOT/CAD_Sheets/D570855-pmk-sgn015.dgn

Kaskaskia Engineering Group, LLC
208 E. Main St., Suite 100
Belleville, Illinois 62220
618.233.5877 phone
618.233.5977 fax
www.kaskaskiaeng.com
PROFESSIONAL REGISTRATIONS LICENSE NO.
Illinois Professional Design Firm 184.001773
Professional Engineering Group 20.5008586

USER NAME = msecrest	DESIGNED - MMS	REVISED -	
	DRAWN - MMS	REVISED -	
PLOT SCALE = 40.002 ' / in.	CHECKED - EJL	REVISED -	
PLOT DATE = 10/11/2023	DATE - 10-02-2023	REVISED -	

STATE OF ILLINOIS
DEPARTMENT OF TRANSPORTATION

FAP 693 (IL RTE 9)
PROPOSED PAVEMENT MARKINGS AND SIGNS

SCALE: 1" = 20' | SHEET 9 OF 10 SHEETS | STA. TO STA.

F.A.P. RTE.	SECTION	COUNTY	TOTAL SHEETS	SHEET NO.
693	(129,109)RS3(16,4,1)	MCLEAN	218	108
		CONTRACT NO. 70855		
		ILLINOIS	FED. AID PROJECT	

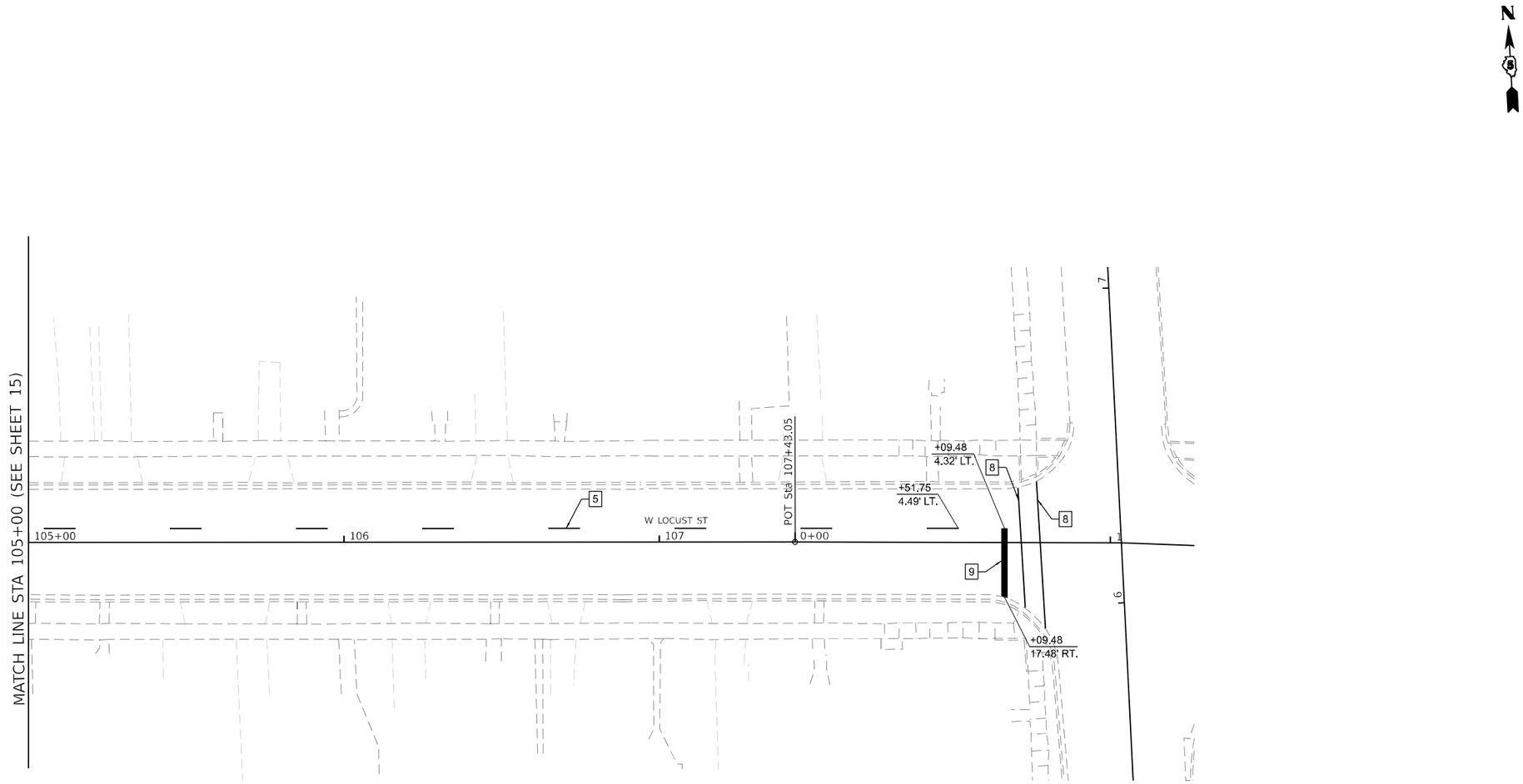

TYPICAL PAVEMENT MARKING LEGEND

1. 4" SKIP-DASH (YELLOW)
2. 4" SOLID (YELLOW)
3. 12" DIAGONAL (YELLOW)
4. 4" DOUBLE YELLOW
5. 4" SKIP-DASH (WHITE)
6. 4" SOLID (WHITE)
7. 12" DIAGONAL (WHITE)
8. 6" SOLID (WHITE)
9. 24" STOP BAR (WHITE)
10. 8" SOLID (WHITE)
11. 4" LANE LINE EXTENSIONS (WHITE)
12. 12" SOLID (WHITE)

NOTE: REMOVE EXISTING PAVEMENT MARKINGS ON LOCUST BETWEEN WHITE OAK AND RD AND HINSHAW PRIOR TO PLACING PROPOSED PAVEMENT MARKINGS

0 20 40 60
SCALE IN FEET

MODEL: Default
FILE NAME: pw://keg-pw.bentley.com:keg-pw-01/Documents/IDOT Projects/17-1137.00 ORD/0_IDOT/CAD_Sheets/D570855-pmk-sgn016.dgn

Kaskaskia Engineering Group, LLC
200 E. Main St., Suite 100
Belleville, Illinois 62220
618.233.5677 phone
618.233.5677 fax
www.kaskaskiaeng.com
PROFESSIONAL REGISTRATIONS
Illinois Professional Design Firm
Professional Engineering Group
LICENSE NO.
184.004773
20-1000186

USER NAME = msecrest	DESIGNED - MMS	REVISED -	
	DRAWN - MMS	REVISED -	
PLOT SCALE = 40.000 ' / in.	CHECKED - EJL	REVISED -	
PLOT DATE = 10/11/2023	DATE - 10-02-2023	REVISED -	

STATE OF ILLINOIS
DEPARTMENT OF TRANSPORTATION

FAP 693 (IL RTE 9)
PROPOSED PAVEMENT MARKINGS AND SIGNS

SCALE: 1" = 20' | SHEET 10 OF 10 SHEETS | STA. TO STA.

F.A.P. RTE.	SECTION	COUNTY	TOTAL SHEETS	SHEET NO.
693	(129,109)RS3(16,4,1)	MCLEAN	218	109
		CONTRACT NO. 70855		
		ILLINOIS	FED. AID PROJECT	

TRAFFIC SIGNAL QUANTITIES

ITEM	UNIT	TOTAL QUANTITIES	0021 80% FEDERAL 10% STATE 10% LOCAL MARKET ST & MLK DR	0021 80% FEDERAL 10% STATE 10% LOCAL MARKET ST & CAROLINE ST	0021 80% FEDERAL 13.4% STATE 6.6% LOCAL MARKET ST & BROWN ST	0021 80% FEDERAL 10% STATE 10% LOCAL MARKET ST & HINSHAW AVE	0021 100% LOCAL
SIGN PANEL - TYPE 1	SQ FT	109	38	21	12	38	
SIGN PANEL - TYPE 2	SQ FT	165	55	45	20	45	
SERVICE INSTALLATION - GROUND MOUNTED	EACH	4	1	1	1	1	
UNDERGROUND CONDUIT, PVC, 2" DIA.	FOOT	3,290	284	969	753	1,284	
UNDERGROUND CONDUIT, PVC, 2 1/2" DIA.	FOOT	439	66	322	19	32	
UNDERGROUND CONDUIT, PVC, 3" DIA.	FOOT	249	90	0	77	82	
UNDERGROUND CONDUIT PVC, 3 1/2" DIA.	FOOT	260	0	89	171	0	
UNDERGROUND CONDUIT, PVC, 4" DIA.	FOOT	338	144	20	44	130	
UNDERGROUND CONDUIT, PVC, 5" DIA.	FOOT	153	74	0	0	79	
HANDHOLE	EACH	19	5	4	3	7	
DOUBLE HANDHOLE	EACH	4	1	1	1	1	
MAINTENANCE OF EXISTING TRAFFIC SIGNAL INSTALLATION	EACH	4	1	1	1	1	
PAINT NEW TRAFFIC SIGNAL POST	EACH	13	-	-	-	-	13
PAINT NEW MAST ARM AND POLE, UNDER 40 FOOT	EACH	3	-	-	-	-	3
PAINT NEW MAST ARM AND POLE, 40 FOOT AND OVER	EACH	3	-	-	-	-	3
PAINT NEW COMBINATION MAST ARM AND POLE, UNDER 40 FOOT	EACH	3	-	-	-	-	3
PAINT NEW COMBINATION MAST ARM AND POLE, 40 FOOT AND OVER	EACH	5	-	-	-	-	5
FULL-ACTUATED CONTROLLER AND TYPE V CABINET	EACH	4	1	1	1	1	
UNINTERRUPTABLE POWER SUPPLY, STANDARD	EACH	4	1	1	1	1	
ELECTRIC CABLE IN CONDUIT, TRACER, NO. 14 1C	FOOT	3,856	947	843	684	1,382	
ELECTRIC CABLE IN CONDUIT, SIGNAL NO. 14 2C	FOOT	5,345	2,259	948	643	1,495	
ELECTRIC CABLE IN CONDUIT, SIGNAL NO. 14 3C	FOOT	5,640	2,212	962	979	1,487	
ELECTRIC CABLE IN CONDUIT, SIGNAL NO. 14 5C	FOOT	10,877	3,435	2,867	2,266	2,309	
ELECTRIC CABLE IN CONDUIT, SIGNAL NO. 14 7C	FOOT	5,228	1,520	854	1,099	1,755	
ELECTRIC CABLE IN CONDUIT, SERVICE, NO. 6 2 C	FOOT	399	132	106	102	59	
ELECTRIC CABLE IN CONDUIT, EQUIPMENT GROUNDING CONDUCTOR, NO. 6 1C	FOOT	2,586	718	723	614	531	
TRAFFIC SIGNAL POST, ALUMINUM 10 FT.	EACH	1	1	-	-	-	
TRAFFIC SIGNAL POST, ALUMINUM 14 FT.	EACH	5	-	2	1	2	
TRAFFIC SIGNAL POST, ALUMINUM 15 FT.	EACH	5	3	1	1	-	
TRAFFIC SIGNAL POST, ALUMINUM 16 FT.	EACH	2	1	-	1	-	
PEDESTRIAN PUSH-BUTTON POST, TYPE II	EACH	15	2	4	3	6	
STEEL MAST ARM ASSEMBLY AND POLE, 26 FT.	EACH	1	-	-	-	1	
STEEL MAST ARM ASSEMBLY AND POLE, 30 FT.	EACH	1	-	1	-	-	
STEEL MAST ARM ASSEMBLY AND POLE, 36 FT.	EACH	1	-	-	-	1	
STEEL MAST ARM ASSEMBLY AND POLE, 42 FT.	EACH	2	-	-	-	2	
STEEL MAST ARM ASSEMBLY AND POLE, 46 FT.	EACH	1	-	1	-	-	
STEEL COMBINATION MAST ARM ASSEMBLY AND POLE 18 FT.	EACH	1	1	-	-	-	
STEEL COMBINATION MAST ARM ASSEMBLY AND POLE 34 FT.	EACH	1	1	-	-	-	
STEEL COMBINATION MAST ARM ASSEMBLY AND POLE 36 FT.	EACH	1	-	-	1	-	
STEEL COMBINATION MAST ARM ASSEMBLY AND POLE 45 FT.	EACH	1	-	-	1	-	

TRAFFIC SIGNAL QUANTITIES

ITEM	UNIT	TOTAL QUANTITIES	0021 80% FEDERAL 10% STATE 10% LOCAL MARKET ST & MLK DR	0021 80% FEDERAL 10% STATE 10% LOCAL MARKET ST & CAROLINE ST	0021 80% FEDERAL 13.4% STATE 6.6% LOCAL MARKET ST & BROWN ST	0021 80% FEDERAL 10% STATE 10% LOCAL MARKET ST & HINSHAW AVE	0021 100% LOCAL
STEEL COMBINATION MAST ARM ASSEMBLY AND POLE 46 FT.	EACH	2	1	1	-	-	
STEEL COMBINATION MAST ARM ASSEMBLY AND POLE, 50 FT.	EACH	1	-	1	-	-	
STEEL COMBINATION MAST ARM ASSEMBLY AND POLE, 54 FT.	EACH	1	1	-	-	-	
CONCRETE FOUNDATION, TYPE A	FOOT	39	15	9	9	6	
CONCRETE FOUNDATION, TYPE C	FOOT	12	3	3	3	3	
CONCRETE FOUNDATION, TYPE E 30-INCH DIAMETER	FOOT	20	10	-	-	10	
CONCRETE FOUNDATION, TYPE E 36-INCH DIAMETER	FOOT	152	39	52	24	37	
DRILL EXISTING HANDHOLE	EACH	4	-	2	-	2	
SIGNAL HEAD, POLYCARBONATE, LED, 1-FACE, 3-SECTION, BRACKET MOUNTED	EACH	19	5	6	4	4	
SIGNAL HEAD, POLYCARBONATE, LED, 1-FACE, 3-SECTION, MAST ARM MOUNTED	EACH	27	7	8	4	8	
SIGNAL HEAD, POLYCARBONATE, LED, 1-FACE, 4-SECTION, BRACKET MOUNTED	EACH	9	2	2	1	4	
SIGNAL HEAD, POLYCARBONATE, LED, 1-FACE, 4-SECTION, MAST ARM MOUNTED	EACH	9	2	2	1	4	
SIGNAL HEAD, POLYCARBONATE, LED, 1-FACE, 5-SECTION, BRACKET MOUNTED	EACH	3	1	-	2	0	
SIGNAL HEAD, POLYCARBONATE, LED, 1-FACE, 5-SECTION, MAST ARM MOUNTED	EACH	1	1	-	-	-	
PEDESTRIAN SIGNAL HEAD, POLYCARBONATE, LED, 1-FACE, BRACKET MOUNTED WITH COUNT DOWN TIMER	EACH	26	8	6	4	8	
TRAFFIC SIGNAL BACKPLATE, RETROREFLECTIVE B7382 TRAFFIC SIGNAL BACKPLATE, RETROREFLECTIVE	EACH	37	10	10	5	12	
REMOVE EXISTING TRAFFIC SIGNAL EQUIPMENT	EACH	4	1	1	1	1	
REMOVE EXISTING HANDHOLE	EACH	33	11	8	4	10	
REMOVE EXISTING DOUBLE HANDHOLE	EACH	4	1	1	1	1	
REMOVE EXISTING CONCRETE FOUNDATION	EACH	24	8	7	5	4	
FIBER OPTIC CABLE IN CONDUIT, 12 FIBERS, SINGLE MODE	FOOT	3,856	947	843	684	1,382	
VIDEO DETECTION SYSTEM COMPLETE	EACH	4	1	1	1	1	
MODIFY EXISTING FIBER OPTIC CABINET	EACH	1	1				
ETHERNET SWITCH	EACH	4	1	1	1	1	
ACCESSIBLE PEDESTRIAN SIGNALS	EACH	26	8	6	4	8	
EMERGENCY VEHICLE PRIORITY SYSTEM	EACH	4					4

Kaskaskia Engineering Group, LLC
PROFESSIONAL DESIGN FIRM — LICENSE NO.
Illinois Professional Design Firm — 184.005775
Professional Engineering Group — 20-5800585

USER NAME = mscrest	DESIGNED - RJO	REVISED -	STATE OF ILLINOIS DEPARTMENT OF TRANSPORTATION	TRAFFIC SIGNAL SUMMARY OF QUANTITIES FAP 693 (IL RTE 9)
	DRAWN - RJO	REVISED -		
PLOT SCALE = 2.000 ' / in.	CHECKED - EJL	REVISED -		SCALE: NTS | SHEET 1 OF 26 SHEETS | STA. | TO STA.
PLOT DATE = 10/11/2023	DATE - 10-02-2023	REVISED -		

F.A.P. RTE.	SECTION	COUNTY	TOTAL SHEETS	SHEET NO.
693	(129,109)RS3(16,4,1)	MCLEAN	218	110
		CONTRACT NO. 70855		
	ILLINOIS | FED. AID PROJECT			

MODEL: Default
FILE NAME: pw:\\kegpw.bentley.com:kegpw-pw01\Documents\IDOT Projects\17-1137.00 ORD\0 IDOT\CAD Sheets\D570855-sht001-TS SQQ.dgn

SCHEDULE OF POST & FOUNDATION QUANTITIES

REF.	LOCATION	TYPE	FOUNDATION TYPE	FOUNDATION DEPTH	STATION	OFFSET
MARKET ST & MARTIN LUTHER KING JR DR						
MA-3	NORTHWEST QUADRANT	STL COMB MAA&P 46	CONC FDN TY E 36D	13.0 FT.	63+86.29	46.44' LT
TSP-4	NORTHWEST QUADRANT	TS POST A 10	CONC FDN TY A	3.0 FT	64+25.76	76.00' LT
TSP-3	NORTHWEST QUADRANT	TS POST A 15	CONC FDN TY A	3.0 FT.	64+54.60	58.83' LT
TSP-5	SOUTHWEST QUADRANT	TS POST A 15	CONC FDN TY A	3.0 FT.	64+45.65	39.75' RT
MA-4	SOUTHWEST QUADRANT	STL COMB MAA&P 18	CONC FDN TY E 30D	10.0 FT.	64+62.84	47.50' RT
TSP-1	SOUTHEAST QUANDRANT	TS POST A 16	CONC FDN TY A	3.0 FT.	65+14.49	47.25' RT
MA-2	NORTHEAST QUADRANT	STL COMB MAA&P 34	CONC FDN TY E 36D	11.0 FT	65+28.47	72.93' LT
TSP-2	NORTHEAST QUADRANT	TS POST A 15	CONC FDN TY A	3.0 FT	65+30+95	55.73' LT
MA-1	SOUTHEAST QUANDRANT	STL COMB MAA&P 54	CONC FDN TY E 36D	15.0 FT	65+32.16	55.00' RT
SERVICE					65+32.04	69.80' RT
APS-5	SOUTHWEST QUADRANT	PED PUSH-BUT POST T2			64+47.63	36.99' LT
APS-8	NORTHWEST QUADRANT	PED PUSH-BUT POST T2			64+59.48	39.75' RT
MARKET ST & CAROLINE ST						
TSP-8	SOUTHWEST QUADRANT	TS POST A 15	CONC FDN TY A	3.0 FT	71+72.18	54.32' RT
MA-7	NORTHWEST QUADRANT	STL COMB MAA&P 46	CONC FDN TY E 36D	13.0 FT	71+77.00	46.50' LT
MA-8	SOUTHWEST QUADRANT	STL MAA&P 46	CONC FDN TY E 36D	13.0 FT	71+94.60	74.61' RT
TSP-7	NORTHWEST QUADRANT	TS POST A 14	CONC FDN TY A	3.0 FT	72+27.62	45.00' LT
MA-6	NORTHEAST QUADRANT	STL MAA&P 30	CONC FDN TY E 36D	11.0 FT	72+72.60	58.91' LT
TSP-6	SOUTHEAST QUADRANT	TS POST A 14	CONC FDN TY A	3.0 FT	72+94.64	63.46' RT
MA-5	SOUTHEAST QUADRANT	STL COMB MAA&P 50	CONC FDN TY E 36D	15.0 FT	73+22.52	50.00' RT
SERVICE					72+78.58	83.61' RT
APS-14	SOUTHWEST QUADRANT	PED PUSH-BUT POST T2			71+82.56	52.22' RT
APS-12	NORTHEAST QUADRANT	PED PUSH-BUT POST T2			72+63.56	53.82 LT
APS-11	NORTHEAST QUADRANT	PED PUSH-BUT POST T2			72+74.36	37.52 LT
APS-9/10	SOUTHEAST QUADRANT	PED PUSH-BUT POST T2			73+05.20	49.61 RT
MARKET ST & BROWN ST						
TSP-11	SOUTHWEST QUADRANT	TS POST A 15	CONC FDN TY A	3.0 FT	77+80.00	55.86' RT
MA-10	NORTHWEST QUADRANT	STL COMB MAA&P 45	CONC FDN TY E 36D	13.0 FT	77+84.80	46.50' LT
TSP-10	NORTHWEST QUADRANT	TS POST A 14	CONC FDN TY A	3.0 FT	78+23.20	47.00' LT
TSP-9	NORTHEAST QUADRANT	TS POST A 16	CONC FDN TY A	3.0 FT	78+52.84	47.00' LT
MA-9	SOUTHEAST QUADRANT	STL COMB MAA&P 36	CONC FDN TYE 36D	11.0 FT	78+98.00	47.50' RT
SERVICE					78+63.39	93.52' RT
APS-18	NORTHWEST QUADRANT	PED PUSH-BUT POST T2			77+82.60	37.5' LT
APS-16/17	SOUTHWEST QUADRANT	PED PUSH-BUT POST T2			77+83.21	49.3' RT
APS-15	SOUTHEAST QUADRANT	PED PUSH-BUT POST T2			78+83.58	49.38' RT
MARKET ST & HINSHAW AVE						
MA-13	NORTHWEST QUADRANT	STL MAA&P 42	CONC FDN TY E 36D	13.0 FT	90+15.85	40.80' LT
TSP-12	SOUTHWEST QUADRANT	TS POST A 14	CONC FDN TY A	3.0 FT	90+26.51	36.00' RT
MA-14	SOUTHWEST QUADRANT	STL MAA&P 36	CONC FDN TY E 36D	11.0FT	90+52.82	52.80' RT
MA-12	NORTHEAST QUADRANT	STL MAA&P 26	CONC FDN TY E 30D	10.0 FT	90+95.16	39.22' LT
TSP-11	NORTHEAST QUADRANT	TS POST A 14	CONC FDN TY A	3.0 FT	91+05.90	26.00' LT
MA-11	SOUTHEAST QUADRANT	STL MAA&P 42	CONC FDN TY E 36D	13.0 FT	91+30.00	43.00' RT
SERVICE					91+13.59	62.04' RT
APS-23/24	NORTHWEST QUADRANT	PED PUSH-BUT POST T2			90+27.81	47.85' LT
APS-22	SOUTHWEST QUADRANT	PED PUSH-BUT POST T2			90+50.31	38.40' RT
APS-21	SOUTHWEST QUADRANT	PED PUSH-BUT POST T2			90+58.62	48.82' RT
APS-25	NORTHEAST QUADRANT	PED PUSH-BUT POST T2			90+92.19	33.50' LT
APS-20	SOUTHEAST QUADRANT	PED PUSH-BUT POST T2			91+25.40	36.50' RT
APS-19	SOUTHEAST QUADRANT	PED PUSH-BUT POST T2			91+37.40	26.50' RT

NOTE:
THE FOUNDATION DEPTH SHOWN WAS TAKEN FROM STANDARD DETAIL 878001-10, CONCRETE FOUNDATION DETAILS.
ACTUAL DEPTH MAY VARY BASED ON GEOTECTICAL INVESTIGATION

SCHEDULE OF SIGNAL HEAD QUANTITIES

QTY.	UNIT	ITEM	SIGNAL #
MARKET ST & MARTIN LUTHER KING JR DR			
5	EACH	SH P LED 1F 3S BM	5, 9, 13, 14, 18
7	EACH	SH P LED 1F 3S MAM	2, 3, 6, 7, 11, 12, 16
2	EACH	SH P LED 1F 4S BM	8, 17
2	EACH	SH P LED 1F 4S MAM	1, 10
10	EACH	TS BCKPLT L F PL SPL	1, 2, 3, 6, 7, 10, 11, 12, 15, 16
1	EACH	SH P LED 1F 5S BM	4
1	EACH	SH P LED 1F 5S MAM	15
8	EACH	PED, SH, P, LED, 1F, BM CT	
MARKET ST & CAROLINE ST			
6	EACH	SH P LED 1F 3S BM	22, 23, 27, 31, 32, 36
8	EACH	SH P LED 1F 3S MAM	20, 21, 24, 25, 29, 30, 33, 34
2	EACH	SH P LED 1F 4S BM	26, 35
2	EACH	SH P LED 1F 4S MAM	19, 28,
10	EACH	TS BCKPLT L F PL SPL	19, 20, 21, 24, 25, 28, 29, 30, 33, 34
0	EACH	SH P LED 1F 5S BM	
0	EACH	SH P LED 1F 5S MAM	
6	EACH	PED, SH, P, LED, 1F, BM CT	
MARKET ST & BROWN ST			
4	EACH	SH P LED 1F 3S BM	41, 42, 46, 48
4	EACH	SH P LED 1F 3S MAM	37, 38, 44, 45
1	EACH	SH P LED 1F 4S BM	47
1	EACH	SH P LED 1F 4S MAM	43
5	EACH	TS BCKPLT L F PL SPL	37, 38, 43, 44, 45
2	EACH	SH P LED 1F 5S BM	39, 40
0	EACH	SH P LED 1F 5S MAM	
4	EACH	PED, SH, P, LED, 1F, BM CT	
MARKET ST & HINSHAW AVE			
4	EACH	SH P LED 1F 3S BM	53, 58, 63, 68
8	EACH	SH P LED 1F 3S MAM	50, 51, 55, 56, 60, 61, 65, 66
4	EACH	SH P LED 1F 4S BM	52, 57, 62, 67
4	EACH	SH P LED 1F 4S MAM	49, 54, 59, 64
12	EACH	TS BCKPLT L F PL SPL	49 50, 51, 54, 55, 56, 59, 60, 61, 64, 65, 66
0	EACH	SH P LED 1F 5S BM	
0	EACH	SH P LED 1F 5S MAM	
8	EACH	PED, SH, P, LED, 1F, BM CT	

SCHEDULE OF HANDHOLE QUANTITIES

REF.	LOCATION	TYPE	STATION	OFFSET
MARKET ST & MARTIN LUTHER KING JR DR				
HH-5	NORTHWEST QUADRANT	HANDHOLE PCC	64+13.00	58.00' LT
HH-4	NORTHWEST QUADRANT	HANDHOLE PCC	64+45.00	42.50' LT
HH-6	SOUTHWEST QUADRANT	HANDHOLE PCC	64+55.00	68.00' RT
HH-2	SOUTHEAST QUADRANT	HANDHOLE PCC	65+20.00	70.00' RT
HH-3	NORTHEAST QUADRANT	HANDHOLE PCC	65+35.00	49.00' LT
DHH-1	SOUTHEAST QUADRANT	DBL HANDHOLE PCC	65+90.00	52.00' RT
MARKET ST & CAROLINE ST				
HH-11	SOUTHWEST QUADRANT	HANDHOLE PCC	71+85.00	66.00' RT
HH-10	NORTHWEST QUADRANT	HANDHOLE PCC	72+20.00	40.00' LT
HH-8	SOUTHEAST QUADRANT	HANDHOLE PCC	72+95.61	58.25' RT
HH-9	NORTHEAST QUADRANT	HANDHOLE PCC	73+20.00	40.00' LT
DHH-7	SOUTHEAST QUADRANT	DBL HANDHOLE PCC	73+35.00	47.66' RT
MARKET ST & BROWN ST				
HH-13	SOUTHWEST QUADRANT	HANDHOLE PCC	77+45.00	36.39' RT
HH-14	NORTHWEST QUADRANT	HANDHOLE PCC	77+70.00	36.04' LT
HH-15	NORTHWEST QUADRANT	HANDHOLE PCC	78+15.00	36.00' LT
DHH-12	SOUTHEAST QUADRANT	DBL HANDHOLE PCC	79+16.00	36.33' RT
MARKET ST & HINSHAW AVE				
HH-19	NORTHWEST QUADRANT	HANDHOLE PCC	90+11.00	33.56' LT
HH-18	SOUTHWEST QUADRANT	HANDHOLE PCC	90+45.00	45.00' RT
HH-20	NORTHEAST QUADRANT	HANDHOLE PCC	90+90.56	41.21' LT
HH-17	SOUTHEAST QUADRANT	HANDHOLE PCC	91+16.82	54.72' RT
DHH-16	SOUTHEAST QUADRANT	DBL HANDHOLE PCC	91+25.08	46.80' RT

MODEL: Default
FILE NAME: pw://ikeg-pw.bentley.com:ikeg-pw-01/Documents/IDOT Projects/17-11137-00 GRID/0 IDOT/CAD Sheets/D570855-sht-0027-TS Schedules.dgn

Kaskaskia Engineering Group, LLC
300 E. Main St., Suite 300, Belleville, Illinois 62220
618.233.5577 phone
618.233.5577 fax
www.kaskaskiaeng.com
PROFESSIONAL DESIGN FIRM
Illinois Professional Design Firm: LICENSE NO. 184.007731
Professional Engineering Group: 20-5000165

USER NAME = msecrest	DESIGNED - RJO	REVISED -	
	DRAWN - RJO	REVISED -	
PLOT SCALE = 2.000 ' / in.	CHECKED - EJL	REVISED -	
PLOT DATE = 10/11/2023	DATE - 10-02-2023	REVISED -	

STATE OF ILLINOIS
DEPARTMENT OF TRANSPORTATION

TRAFFIC SIGNAL SCHEDULES
FAP 693 (IL RTE 9)

SCALE: NTS | SHEET 2 OF 26 SHEETS | STA. | TO STA.

F.A.P. RTE.	SECTION	COUNTY	TOTAL SHEETS	SHEET NO.
693	(129,109)RS3(16,4,1)	MCLEAN	218	111
		CONTRACT NO. 70855		
	ILLINOIS	FED. AID PROJECT		

ELECTRICAL GENERAL NOTES

1. ALL SIGNAL HEADS SHALL HAVE 12" SECTIONS. MOUNTING HARDWARE SHALL BE UNPAINTED ALUMINUM. ALL BOLTS, SCREWS, NUTS AND WASHERS SHALL BE STAINLESS STEEL. ANTI-SEIZE PAST COMPOUND SHALL BE USED ON ALL MOUNTING HARDWARE CONNECTIONS.

2. BACKPLATES SHALL BE ABS PLASTIC, POLYCARBONATE, LOUVERED FORMED BACKPLATES WITH FLUORESCENT YELLOW SHEETING.

3. THE LOCATION OF MAST ARM SUPPORTS SHALL BE APPROVED BY THE ENGINEER BEFORE FOUNDATIONS ARE CONSTRUCTED. MAST ARM POLES SHALL BE LOCATED A MINIMUM OF 10 FEET FROM THE EDGE OF PAVEMENT OR 2 FEET FROM THE EDGE OF SHOULDER, WHICHEVER DISTANCE IS GREATER. IN CURBED SECTION, THE MAST ARM POLES SHALL BE LOCATED A MINIMUM OF 5 FEET FROM THE FACE OF THE CURB. THESE DISTANCES ARE TO THE NEAR FACE OF THE MAST ARM POLE.

4. ALL TRAFFIC SIGNAL CABLES SHALL BE #14 A.W.G. STRANDED COPPER UNLESS OTHERWISE SPECIFIED.

5. ALL HANDHOLE'S SHALL BE CAST-IN-PLACE PORTLAND CEMENT CONCRETE (PER ARTICLE 814.03). THE CAST-IN-PLACE LEGEND IN THE COVER SHALL BE "TRAFFIC SIGNALS". SLOPE HANDHOLE COVERS TO MATCH PROPOSED GRADE ELEVATIONS. HANDHOLE LIDS SHALL OPEN SO THAT YOU ARE FACING THE ROAD.

6. MAST ARM FOUNDATION DEPTHS SHOWN ARE APPROXIMATE. THE ENGINEER WILL PROVIDE SOIL BORINGS TO DETERMINE ACTUAL MAST ARM FOUNDATION DEPTHS. THE CONTRACTOR SHALL VERIFY REQUIRED DEPTHS PRIOR TO STEEL FABRICATION AND CONSTRUCTION OF CONCRETE FOUNDATIONS.

7. PROPOSED CONTROLLER EQUIPMENT SHALL BE COMPATIBLE WITH EXISTING DISTRICT MOBOTREX TRAFFIC SIGNAL EQUIPMENT MONITORING EQUIPMENT AND SOFTWARE.

8. CONDUIT SPLICES WILL NOT BE PAID FOR SEPARATELY, BUT SHALL BE CONSIDERED PART OF THE NEW CONDUIT INSTALLATION.

9. THE LOCATION OF SIGNAL HEADS ON MAST ARMS SHALL BE APPROVED BY THE ENGINEER BEFORE MAST ARMS ARE INSTALLED.

10. ALL CONDUIT IN TRENCH SHALL BE P.V.C. CONDUIT PUSHED MAY BE PVC OR GALVANIZED STEEL. CONDUIT ATTACHED TO STRUCTURE SHALL BE GALVANIZED STEEL.

11. ALL TRAFFIC SIGNAL WIRING SHALL EXTEND FROM CONTROLLER TO SIGNAL. SPLICES IN HANDHOLES AND JUNCTION BOXES WILL NOT BE ALLOWED.

12. ALL VEHICLE AND PEDESTRIAN SIGNAL HEADS SHALL HAVE POLYCARBONATE BLACK HOUSING AND STEEL OR ALUMINUM BRACKETS.

13. THE ELEVATION OF THE TOP OF THE DOUBLE HANDHOLE SHALL BE LESS THAN THE ELEVATION OF THE TOP OF THE CONTROLLER FOUNDATION. THE DOUBLE HANDHOLES INSTALLED CLOSE TO THE ROADWAY SHALL OPEN UP TOWARDS THE ROADWAY SO THE ELECTRICAL MAINTAINER IS NOT EXPOSED TO TRAFFIC WHEN WORKING.

14. ALL TRAFFIC SIGNAL CONTROLLERS SHALL INCLUDE NTCIP AND THE VIDEO DETECTION SHALL USE VIDEO G.

15. ALL UTILITIES SHALL BE LOCATED IN THE FIELD PRIOR TO ANY ATTEMPT TO CONSTRUCT ANY COMPONENT OF THE VARIOUS TRAFFIC SIGNAL INSTALLATIONS.

16. SIGN SHEETING FOR MAST ARM SIGNS SHALL BE TYPE ZZ SHEETING.

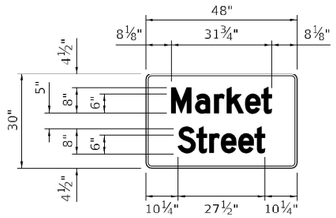

A

FURNISH & INSTALL SIX (6) EACH SIGN

DETAIL OF

SIGN PANEL - TYPE 2

(NOT TO SCALE)

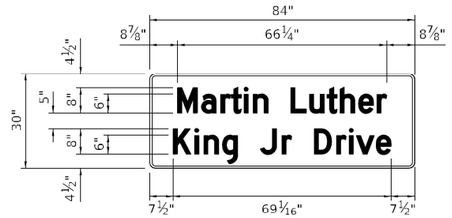

B

FURNISH & INSTALL TWO (2) EACH SIGN

DETAIL OF

SIGN PANEL - TYPE 2

(NOT TO SCALE)

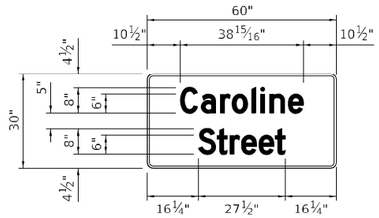

C

FURNISH & INSTALL TWO (2) EACH SIGN

DETAIL OF

SIGN PANEL - TYPE 2

(NOT TO SCALE)

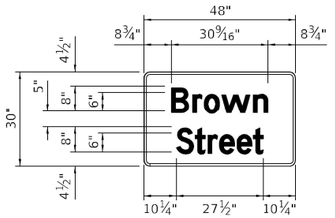

D

FURNISH & INSTALL TWO (2) EACH SIGN

DETAIL OF

SIGN PANEL - TYPE 2

(NOT TO SCALE)

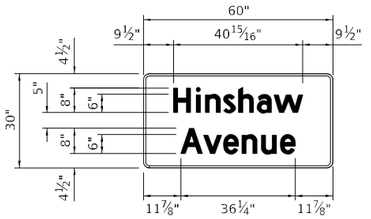

E

FURNISH & INSTALL TWO (2) EACH SIGN

DETAIL OF

SIGN PANEL - TYPE 2

(NOT TO SCALE)

R10-27a
30x36

F

FURNISH & INSTALL NINE (9) EACH SIGN

DETAIL OF

SIGN PANEL - TYPE 1

(NOT TO SCALE)

R10-12
30x36

G

FURNISH & INSTALL TWO (2) EACH SIGN

DETAIL OF

SIGN PANEL - TYPE 1

(NOT TO SCALE)

R10-3e
9"x15"

H

FURNISH & INSTALL TWELVE (12) EACH SIGN

DETAIL OF

SIGN PANEL - TYPE 1

(NOT TO SCALE)

R10-3e
9"x15"

I

FURNISH & INSTALL FOURTEEN (14) EACH SIGN

DETAIL OF

SIGN PANEL - TYPE 1

(NOT TO SCALE)

MODEL: Default
FILE NAME: pw:\\Kaspw.bentley.com:kesp-pw01\Documents\IDOT Projects\17-1137.00 ORD\0 IDOT\CAD Sheets\D5705855-sht003-TS Notes.dgn

Kaskaskia Engineering Group, LLC
PROFESSIONAL ENGINEERING FIRM
Illinois Professional Design Firm
Professional Engineering Group
LICENSE NO.
184.007713
EXPIRATION
20-30SEP26

USER NAME = msecrest	DESIGNED - RJO	REVISED -	
	DRAWN - RJO	REVISED -	
PLOT SCALE = 2.000 ' / in.	CHECKED - EJL	REVISED -	
PLOT DATE = 10/11/2023	DATE - 10-02-2023	REVISED -	

STATE OF ILLINOIS
DEPARTMENT OF TRANSPORTATION

TRAFFIC SIGNAL GENERAL NOTES & SIGNS
FAP 693 (IL RTE 9)

SCALE: NTS | SHEET 3 OF 26 SHEETS | STA. | TO STA.

F.A.P. RTE.	SECTION	COUNTY	TOTAL SHEETS	SHEET NO.
693	(129,109)RS3(16,4,1)	MCLEAN	218	112
		CONTRACT NO. 70855		
	ILLINOIS	FED. AID PROJECT		

GENERAL SIGNAL NOTES:

1. BEFORE STARTING ANY EXCAVATION, THE CONTRACTOR SHALL CALL "J.U.L.I.E." AT (800)-892-0123 OR 811 FOR FIELD LOCATIONS OF BURIED ELECTRIC, TELEPHONE AND GAS, 48-HOUR NOTIFICATION IS REQUIRED.

2. THE CONTRACTOR SHALL CONTACT THE TRAFFIC CONTROL SUPERVISOR AT 72-HOURS IN ADVANCE OF BEGINNING WORK.

3. IT SHALL BE THE CONTRACTOR'S RESPONSIBILITY TO VERIFY ALL DIMENSIONS AND CONDITIONS EXISTING IN THE FIELD PRIOR TO ORDERING MATERIALS AND BEGINNING CONSTRUCTION. THIS SHALL INCLUDED LOCATING THE MAST ARM FOUNDATIONS AND VERIFYING THE MAST ARM LENGTHS.

4. THE EXACT LOCATION OF ALL UTILITIES SHALL BE FIELD VERIFIED BY THE CONTRACTOR BEFORE ORDERING ANY MATERIALS AND STARTING ANY WORK. FOR LOCATIONS OF UTILITIES, LOCALLY OWNED EQUIPMENT, LEASED ENFORCEMENT CAMERA SYSTEM FACILITIES AND IDOT UNDERGROUND FACILITIES, CONTACT THE LOCATION COUNTIES, MUNICIPALITIES AND IDOT FOR LOCATES, THE CONTRACTOR SHALL CALL"J.U.L.I.E." AT (800)-892-0123.

5. IF THE CONTRACT REQUIRES THE SERVICES OF AN ELECTRICAL CONTRACTOR, THE CONTRACTOR SHALL BE RESPONSIBLE AT HIS/HER OWN EXPENSE FOR LOCATING EXISTING IDOT ELECTRICAL FACILITIES PRIOR TO PERFORMING ANY WORK. IF THIS CONTRACT DOES NOT REQUIRE THE SERVICES OF AN ELECTRICAL CONTRACTOR, THE CONTRACTOR MAY REQUEST ON FREE LOCATE FOR EXISTING IDOT ELECTRICAL FACILITIES FROM THE DISTRICT TWO ELECTRICAL MAINTENANCE CONTRACTOR PRIOR TO THE START OF ANY WORK. ADDITIONAL REQUEST MAY BE AT THE EXPENSE OF THE CONTRACTOR. THE LOCATION OF UNDERGROUND TRAFFIC FACILITIES DOES NOT RELIEVE THE CONTRACTOR OF THEIR RESPONSIBILITY TO REPAIR ANY FACILITIES DAMAGED DURING THE CONSTRUCTION AT THEIR EXPENSE.

6. THE CONTRACTOR SHALL CHECK THE PROPOSED TRAFFIC SIGNAL EQUIPMENT LOCATIONS FOR UNDERGROUND AND OVERHEAD UTILITY CONFLICTS. THE CONTRACTOR SHALL NOTIFY THE AREA ENGINEER, THE RESIDENT ENGINEER, AND ANY IMPACTED UTILITY COMPANY OF THE CONFLICT AND SHALL COORDINATE AND RESOLVE THE ISSUE PRIOR TO ORDERING MATERIALS, AND PRIOR TO POURING FOUNDATIONS.

7. THE CONTRACTOR SHALL COORDINATE CONSTRUCTION ACTIVITIES WITH UTILITY COMPANIES, LOCAL GOVERNMENT AGENCIES, AND IDOT.

8. RESTORATION OF THE TRAFFIC SIGNAL WORK AREA SHALL BE INCLUDED IN THE RELATED PAY ITEMS SUCH AS FOUNDATION, CONDUIT, HANDHOLE, ETC., AND NO EXTRA COMPENSATION SHALL BE ALLOWED. ALL ROADWAY SURFACES SUCH AS SHOULDERS, MEDIAN, SIDEWALKS, PAVEMENT, ETC. SHALL BE REPLACED IN KIND. ALL DAMAGE TO MOWED LAWN SHALL BE REPLACED WITH AN APPROVED SOD, AND ALL DAMAGE TO UNMOWED FIELDS SHALL BE SEEDED IN ACCORDANCE WITH STANDARD SPECIFICATIONS 252 AND 250 RESPECTIVELY.

9. PARTIAL PAYMENT AS DESCRIBED IN ARTICLE 109.07(b) OF THE STANDARD SPECIFICATIONS WILL NOT BE ALLOWED FOR ITEMS INCLUDED IN THIS CONTRACT.

10. LOCATION WITH PEDESTRIAN EQUIPMENT HAVE BEEN DESIGNED TO BE ADA COMPLIANT. ANY DEVIATIONS FROM THE PLANS FOR TRAFFIC SIGNAL MAST ARM/POST THAT HAVE PEDESTRIAN EQUIPMENT WILL HAVE TO BE APPROVED BY THE ENGINEER TO ENSURE ADA COMPLIANCE.

11. CONTACT GARY SIMS - IDOT OPERATIONS ENGINEER (217) 251-4859, TWO WEEKS IN ADVANCE TO DISCUSS PROPOSED CONSTRUCTION TRAFFIC PLANS AND TO ASSIST WITH SIGNAL TIMINGS.

REMOVAL AND RELOCATION NOTES:

THE FOLLOWING ITEMS SHALL BE REMOVED BY THE CONTRACTOR AND SHALL BE DISPOSED BY THEM OUTSIDE THE RIGHT-OF-WAY AT THEIR EXPENSE. THE SALVAGE VALUE OF THE REMOVED EQUIPMENT SHALL BE REFLECTED IN THE CONTRACT BID PRICE:

1	EACH	CONTROLLER AND CABINET (COMPLETE)
4	EACH	STEEL MAST ARM AND POLE
1	EACH	TRAFFIC SIGNAL POST
4	EACH	PEDESTRIAN SIGNAL HEAD
4	EACH	PEDESTRIAN PUSH-BUTTON
3	EACH	PEDESTRIAN PUSH-BUTTON POST
5	EACH	3-SECTION SIGNAL HEAD
8	EACH	5-SECTION SIGNAL HEAD
1	EACH	SERVICE INSTALLATION
13	EACH	TRAFFIC SIGNAL BACKPLATE
2	EACH	EVP

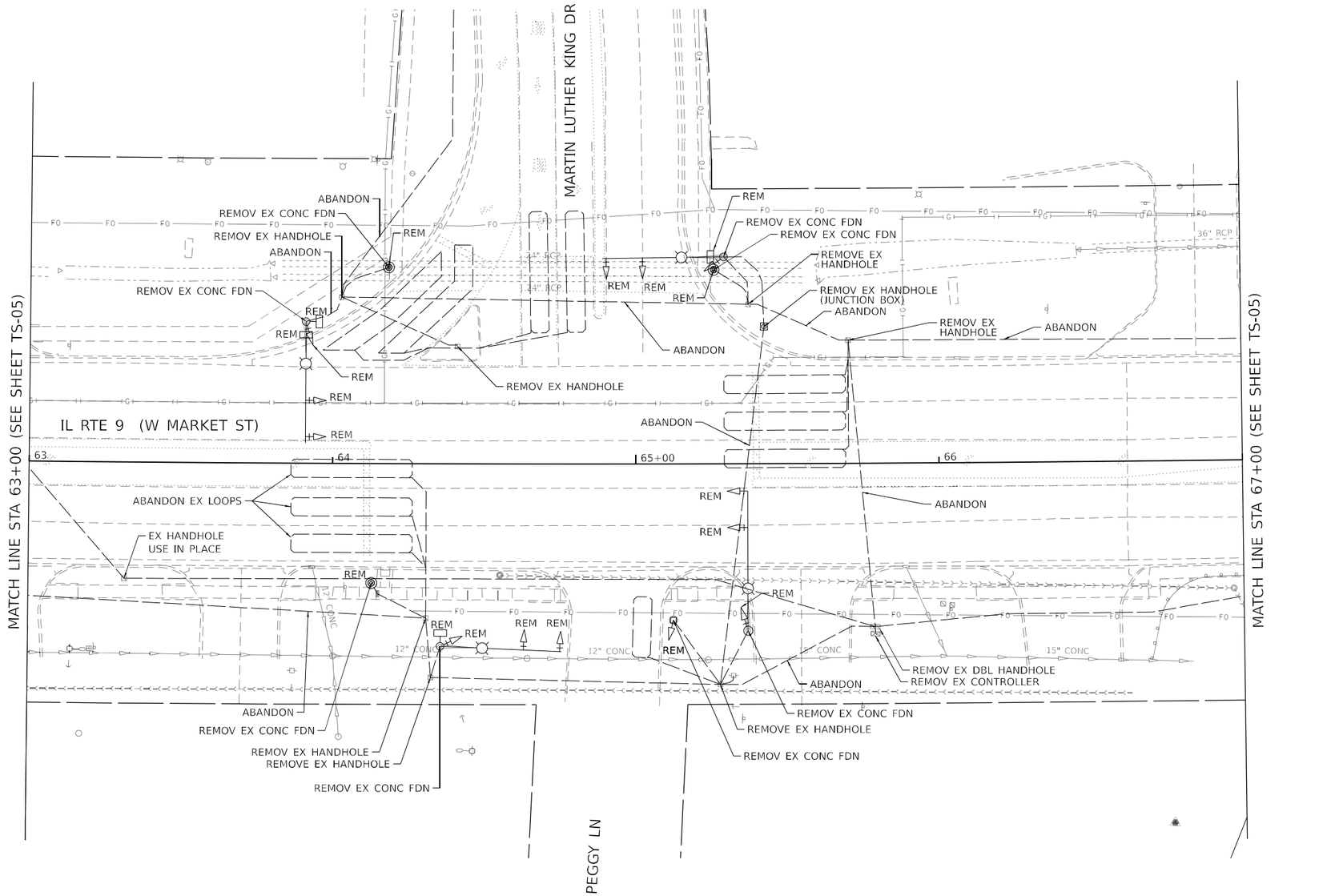

0 20 40 60
SCALE IN FEET

MODEL: Default
FILE NAME: pw:\\kaskaskia.bentley.com:kes-pw-01\Documents\IDOT Projects\17-1137.00 ORD\0_IDOT\CAD Sheets\D570855-sht004-TS Market MLK Rem.dgn

Kaskaskia Engineering Group, LLC
200 E. Main St., Suite 100, Belleville, Illinois 62220, 618.233.5077 phone, 618.233.5955 fax, www.kaskaskiaeng.com
PROFESSIONAL REGISTRATION: Illinois Professional Design Firm: 184.007773; Professional Engineering Group: 20.6000100

USER NAME = mscrest	DESIGNED - RJO	REVISED -	
	DRAWN - RJO	REVISED -	
PLOT SCALE = 40.0000 ' / in.	CHECKED - EJL	REVISED -	
PLOT DATE = 10/11/2023	DATE - 10-02-2023	REVISED -	

STATE OF ILLINOIS
DEPARTMENT OF TRANSPORTATION

EXISTING TRAFFIC SIGNAL EQUIPMENT REMOVAL
FAP 693 (IL RTE 9) - W. MARKET ST. & MARTIN LUTHER KING DR.

SCALE: 1"= 20' | SHEET 4 OF 26 SHEETS | STA. | TO STA.

F.A.P. RTE.	SECTION	COUNTY	TOTAL SHEETS	SHEET NO.
693	(129,109)RS3(16,4,1)	MCLEAN	218	113
		CONTRACT NO. 70855		
	ILLINOIS	FED. AID PROJECT		

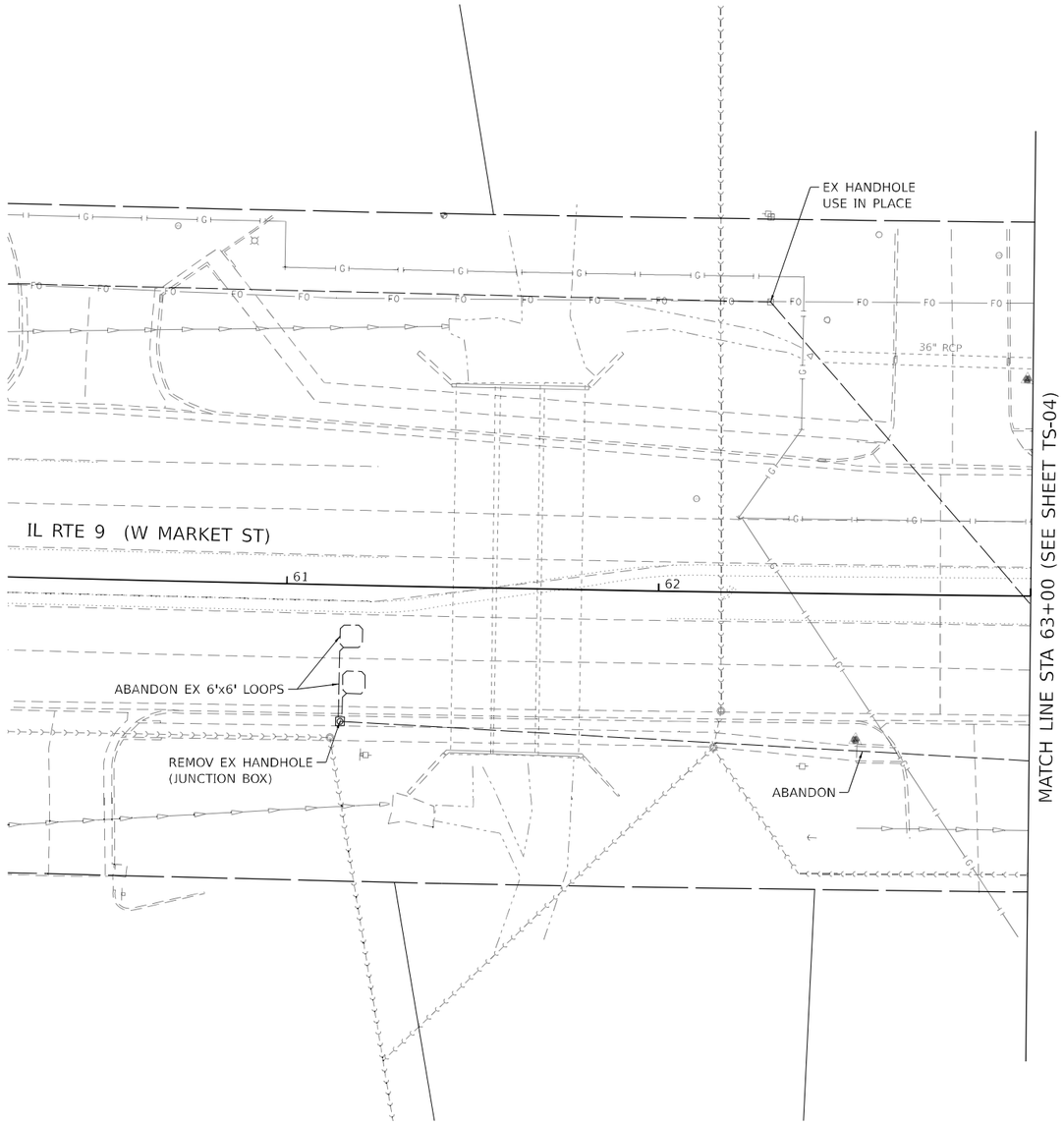

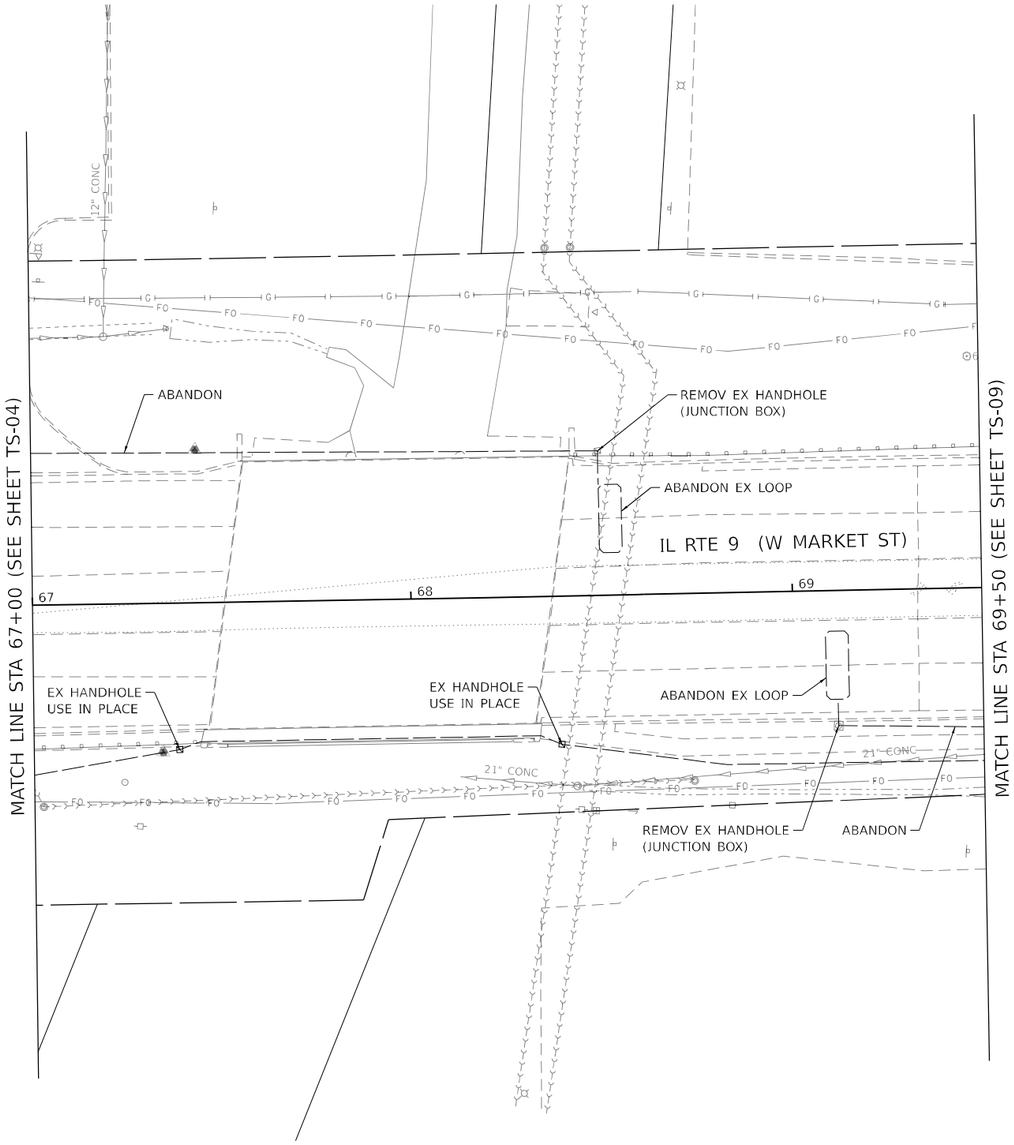

0 20 40 60
SCALE IN FEET

MODEL: Default
FILE NAME: pw://fieg-pw.bentley.com:fieg-pw-01/Documents/IDOT Projects/17-1137.00 ORD/0_IDOT/CAD Sheets/D570855-sht005-TS Market MLK Rem.dgn

Kaskaskia Engineering Group, LLC
PROFESSIONAL DESIGN FIRM
Illinois Professional Design Firm
Professional Engineering Group
200 E. Main St., Suite 100
Belleville, Illinois 62220
618.233.5077 phone
618.233.5077 fax
www.kaskaskiaeng.com
DESIGN FIRM NO. 184.007753
20.3680186

USER NAME = msecrest	DESIGNED - RJO	REVISED -	
	DRAWN - RJO	REVISED -	
PLOT SCALE = 40.0000 ' / in.	CHECKED - EJL	REVISED -	
PLOT DATE = 10/11/2023	DATE - 10-02-2023	REVISED -	

STATE OF ILLINOIS
DEPARTMENT OF TRANSPORTATION

EXISTING TRAFFIC SIGNAL EQUIPMENT REMOVAL
FAP 693 (IL RTE 9) - W. MARKET ST. & MARTIN LUTHER KING DR.

SCALE: 1"= 20' | SHEET 5 OF 26 SHEETS | STA. | TO STA.

F.A.P. RTE.	SECTION	COUNTY	TOTAL SHEETS	SHEET NO.
693	(129,109)RS3(16,4,1)	MCLEAN	218	114
		CONTRACT NO. 70855		
	ILLINOIS	FED. AID PROJECT		

TRAFFIC SIGNAL PLAN LEGEND

ITEM	PROPOSED
MAST ARM ASSEMBLY AND POLE	
STEEL COMBINATION MAST ARM ASSEMBLY AND POLE WITH LUMINAIRE	
SIGNAL POST	
CONTROLLER CABINET	
SERVICE INSTALLATION (P) POLE OR (G) GROUND MOUNT	
SIGNAL HEAD	
SIGNAL HEAD WITH BACK PLATE	
PEDESTRIAN SIGNAL HEAD	
PEDESTRIAN PUSH-BUTTON -APS (ACCESSIBLE PEDESTRIAN PUSH-BUTTON)	APS
PRIORITY VEHICLE DETECTOR	
VIDEO DETECTOR SYSTEM	V
HANDHOLE	
DOUBLE HANDHOLE	
UNDERGROUND CONDUIT (UC)	
PROPOSED SIGN	

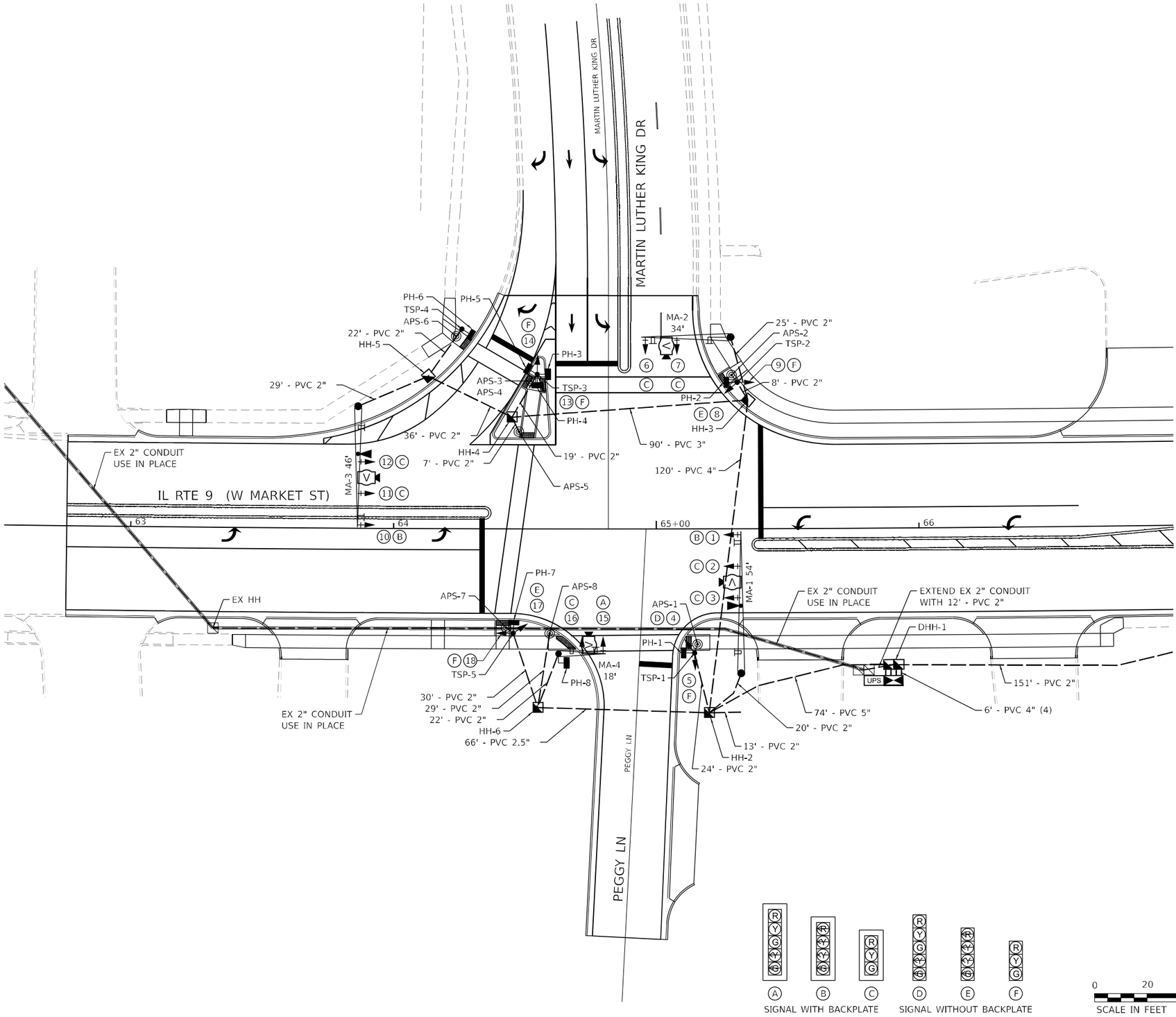

MODEL: Default
FILE NAME: pw://files-pw.bentley.com:keg-pw-01/Documents/IDOT Projects/17-1137.00 ORD0_IDOT/CAD Sheets/DS70855-sht006-TS Market MLK.dgn

Kaskaskia Engineering Group, LLC
200 E. Main St., Suite 100, Belleville, Illinois 62220
618.233.5077 phone
618.233.5955 fax
www.kaskaskiaeng.com
PROFESSIONAL REGISTRATIONS — LICENSE NO.
Illinois Professional Design Firm: 184.005773
Professional Engineering Group: 20.6000186

USER NAME = msecrest	DESIGNED - RJO	REVISED -	
	DRAWN - RJO	REVISED -	
PLOT SCALE = 40.0000 ' / in.	CHECKED - EJL	REVISED -	
PLOT DATE = 10/11/2023	DATE - 10-02-2023	REVISED -	

STATE OF ILLINOIS
DEPARTMENT OF TRANSPORTATION

PROPOSED TRAFFIC SIGNALS
FAP 693 (IL RTE 9) - W. MARKET ST. & MARTIN LUTHER KING DR.

SCALE: 1"= 20' | SHEET 6 OF 26 SHEETS | STA. | TO STA.

F.A.P. RTE.	SECTION	COUNTY	TOTAL SHEETS	SHEET NO.
693	(129,109)RS3(16,4,1)	MCLEAN	218	115
		CONTRACT NO. 70855		
	ILLINOIS	FED. AID PROJECT		

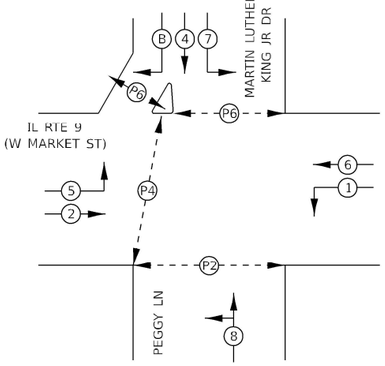

PHASE DESIGNATION DIAGRAM

2 — VEHICULAR MOVEMENT

P2 — PEDESTRIAN MOVEMENT

NUMBER REFERS TO ASSOCIATED PHASE

CABLE DIAGRAM LEGEND

———	ELECTRIC CABLE IN CONDUIT
5/C	NUMBER OF CONDUCTORS IN CABLE
—■—	PROPOSED SERVICE INSTALLATION
NO. 6	AMERICAN WIRE GAUGE (AWG) SIZE 6 CONDUCTORS (SEE GENERAL NOTES)
APS	PEDESTRIAN PUSH BUTTON -(APS) ACCESSIBLE PEDESTRIAN PUSH-BUTTON
	PEDESTRIAN SIGNAL HEAD WITH COUNTDOWN DISPLAY
	EMERGENGY VEHICLE PREEMPTION DETECTOR AND BEACON
V	PROPOSED TRAFFIC SIGNAL VIDEO DETECTOR SYSTEM
	GROUND ROD AT (C) CONTROLLER, (H) HANDHOLE, (P) POST, (M) MAST ARM. OR (S) SERVICE

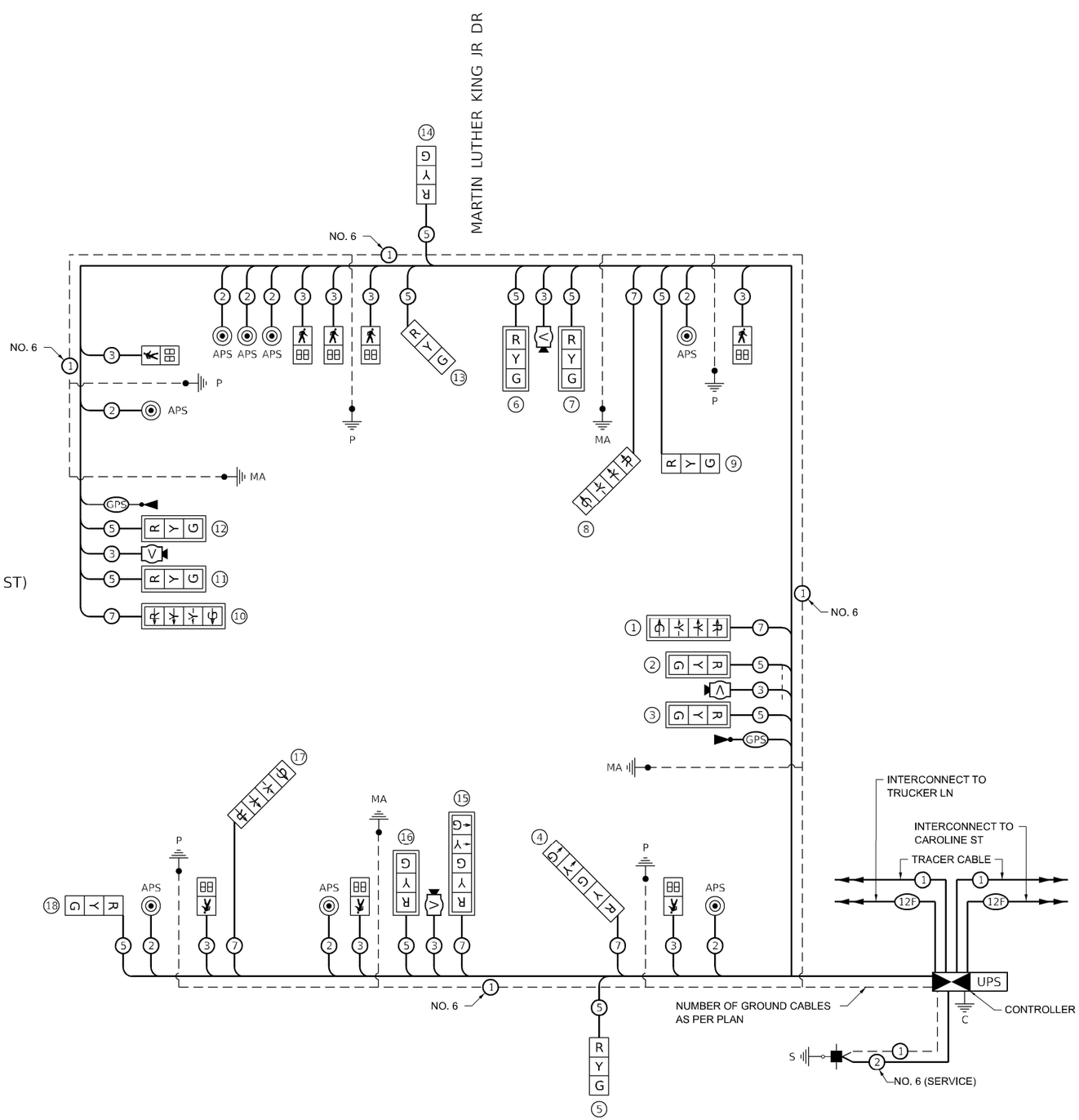

Kaskaskia Engineering Group, LLC
PROFESSIONAL DESIGN FIRM — Illinois Professional Design Firm: Professional Engineering Group — LICENSE NO. 184.007753 — 20-3880585

USER NAME = msecrest	DESIGNED - RJO	REVISED -	
	DRAWN - RJO	REVISED -	
PLOT SCALE = 40.0000 ' / in.	CHECKED - EJL	REVISED -	
PLOT DATE = 10/11/2023	DATE - 10-02-2023	REVISED -	

STATE OF ILLINOIS
DEPARTMENT OF TRANSPORTATION

TRAFFIC SIGNAL CABLE DIAGRAM
FAP 693 (IL RTE 9) - W. MARKET ST. & MARTIN LUTHER KING DR.

SCALE: NTS | SHEET 7 OF 26 SHEETS | STA. | TO STA.

F.A.P. RTE.	SECTION	COUNTY	TOTAL SHEETS	SHEET NO.
693	(129,109)RS3(16,4,1)	MCLEAN	218	116
		CONTRACT NO. 70855		
	ILLINOIS	FED. AID PROJECT		

MODEL: Default
FILE NAME: pw:///fsgpw.bentley.com:kaskpw-pw01/Documents/IDOT Projects/17-1137.00 ORD/0 IDOT/CAD Sheets/D570855-sht0027-TS Market MLK Cable.dgn

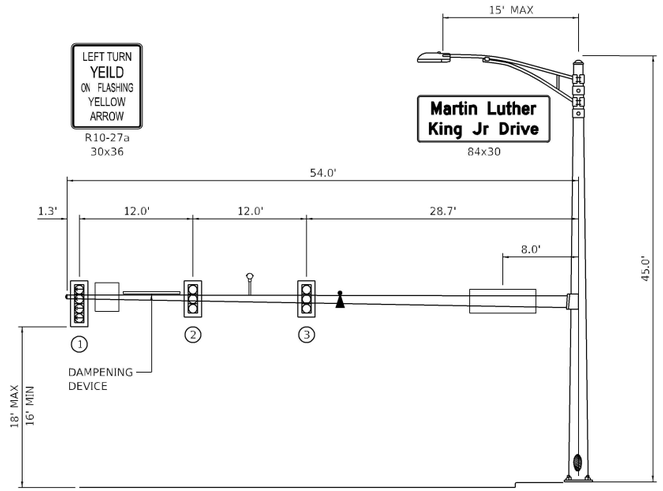

MA-1 54'

EASTBOUND TRAFFIC SIGNAL
IL RTE 9 (MARKET ST) & MARTIN LUTHER KING JR DR

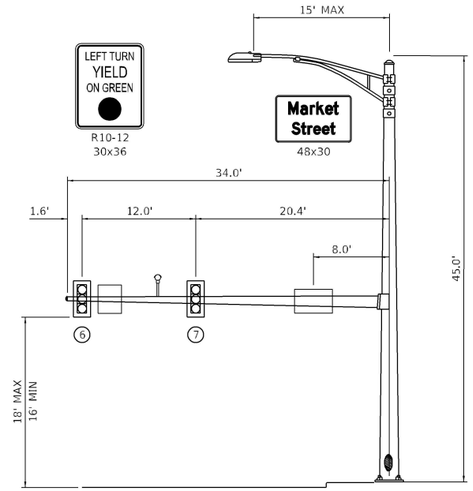

MA-2 34'

NORTHBOUND TRAFFIC SIGNAL
IL RTE 9 (MARKET ST) & MARTIN LUTHER KING JR DR

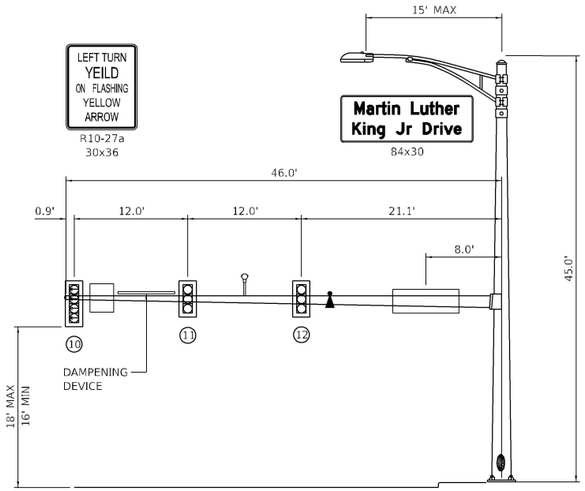

MA-3 46'

WESTBOUND TRAFFIC SIGNAL
IL RTE 9 (MARKET ST) & MARTIN LUTHER KING JR DR

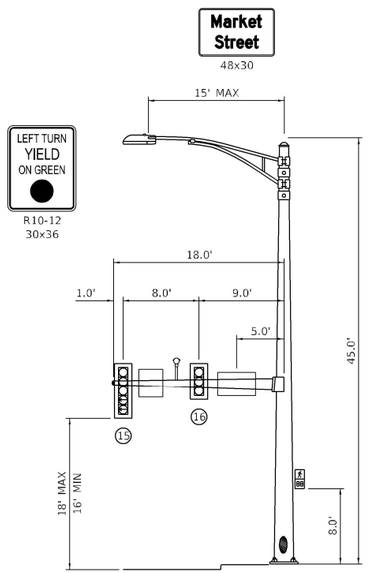

MA-4 18'

SOUTHBOUND TRAFFIC SIGNAL
IL RTE 9 (MARKET ST) & MARTIN LUTHER KING JR DR

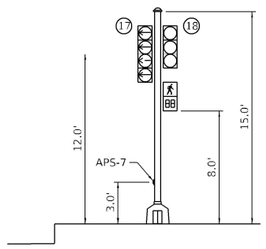

SOUTHWEST QUAD

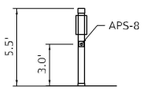

APS-8
SOUTHWEST QUAD

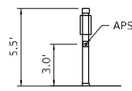

APS-5
NORTHWEST QUAD ISLAND

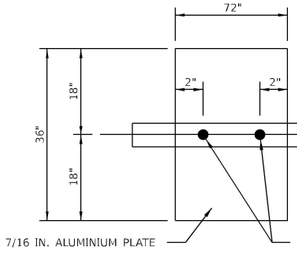

DAMPENING PLATE DETAIL

(TOP VIEW) INCIDENTAL TO MAST ARM QUANTITY

NOT TO SCALE

NOTE: FOR MAST ARMS OVER 42' INSTALL DAMPENING DEVICE. DAMPENING DEVICE SHALL CONSIST OF A 72" X 36" TYPE 1 UNPAINTED ALUMINUM SIGN STOCK MOUNTED HORIZONTALLY ON TOP OF MAST ARM WITH THE 36" LENGTH PERPENDICULAR TO THE ARM. THE COST OF THE DAMPENING DEVICE IS INCLUDED IN THE COST OF THE MAST ARM PAY ITEM.

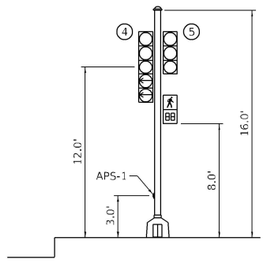

TSP-1
SOUTHEAST QUAD

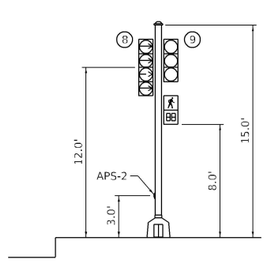

TSP-2
NORTHEAST QUAD

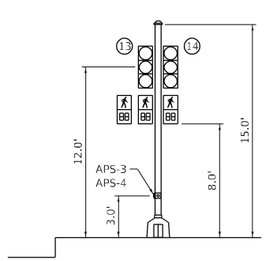

TSP-3
NORTHWEST QUAD ISLAND

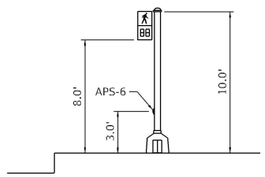

TSP-4
NORTHWEST QUAD

MODEL: Default
FILE NAME: pw://kaspw.bentley.com:kesp-pw01/Documents/IDOT Projects/17-1137.00 QRD/0 IDOT/CAD Sheets/D570855-sht008-TS Market MLK Det&Ss.dgn

Kaskaskia Engineering Group, LLC
Illinois Professional Design Firm
Professional Engineering Group
700 E. Main St., Suite 160
Belleville, Illinois 62220
618.233.5077 phone
618.233.5075 fax
www.kaskaskiaeng.com
184.006753
25-5860566

USER NAME = msecrest	DESIGNED - RJO	REVISED -	
	DRAWN - RJO	REVISED -	
PLOT SCALE = 16.0000 ' / in.	CHECKED - EJL	REVISED -	
PLOT DATE = 10/11/2023	DATE - 10-02-2023	REVISED -	

STATE OF ILLINOIS
DEPARTMENT OF TRANSPORTATION

TRAFFIC SIGNAL DETAILS
FAP 693 (IL RTE 9) - W. MARKET ST. & MARTIN LUTHER KING DR.

SCALE: NTS | SHEET 8 OF 26 SHEETS | STA. | TO STA.

F.A.P. RTE.	SECTION	COUNTY	TOTAL SHEETS	SHEET NO.
693	(129,109)RS3(16,4,1)	MCLEAN	218	117
		CONTRACT NO. 70855		
		ILLINOIS	FED. AID PROJECT	

GENERAL SIGNAL NOTES:

1. BEFORE STARTING ANY EXCAVATION, THE CONTRACTOR SHALL CALL "J.U.L.I.E." AT (800)-892-0123 OR 811 FOR FIELD LOCATIONS OF BURIED ELECTRIC, TELEPHONE AND GAS, 48-HOUR NOTIFICATION IS REQUIRED.

2. THE CONTRACTOR SHALL CONTACT THE TRAFFIC CONTROL SUPERVISOR AT 72-HOURS IN ADVANCE OF BEGINNING WORK.

3. IT SHALL BE THE CONTRACTOR'S RESPONSIBILITY TO VERIFY ALL DIMENSIONS AND CONDITIONS EXISTING IN THE FIELD PRIOR TO ORDERING MATERIALS AND BEGINNING CONSTRUCTION. THIS SHALL INCLUDED LOCATING THE MAST ARM FOUNDATIONS AND VERIFYING THE MAST ARM LENGTHS.

4. THE EXACT LOCATION OF ALL UTILITIES SHALL BE FIELD VERIFIED BY THE CONTRACTOR BEFORE ORDERING ANY MATERIALS AND STARTING ANY WORK. FOR LOCATIONS OF UTILITIES, LOCALLY OWNED EQUIPMENT, LEASED ENFORCEMENT CAMERA SYSTEM FACILITIES AND IDOT UNDERGROUND FACILITIES, CONTACT THE LOCATION COUNTIES, MUNICIPALITIES AND IDOT FOR LOCATES, THE CONTRACTOR SHALL CALL"J.U.L.I.E." AT (800)-892-0123.

5. IF THE CONTRACT REQUIRES THE SERVICES OF AN ELECTRICAL CONTRACTOR, THE CONTRACTOR SHALL BE RESPONSIBLE AT HIS/HER OWN EXPENSE FOR LOCATING EXISTING IDOT ELECTRICAL FACILITIES PRIOR TO PERFORMING ANY WORK. IF THIS CONTRACT DOES NOT REQUIRE THE SERVICES OF AN ELECTRICAL CONTRACTOR, THE CONTRACTOR MAY REQUEST ON FREE LOCATE FOR EXISTING IDOT ELECTRICAL FACILITIES FROM THE DISTRICT TWO ELECTRICAL MAINTENANCE CONTRACTOR PRIOR TO THE START OF ANY WORK. ADDITIONAL REQUEST MAY BE AT THE EXPENSE OF THE CONTRACTOR. THE LOCATION OF UNDERGROUND TRAFFIC FACILITIES DOES NOT RELIEVE THE CONTRACTOR OF THEIR RESPONSIBILITY TO REPAIR ANY FACILITIES DAMAGED DURING THE CONSTRUCTION AT THEIR EXPENSE.

6. THE CONTRACTOR SHALL CHECK THE PROPOSED TRAFFIC SIGNAL EQUIPMENT LOCATIONS FOR UNDERGROUND AND OVERHEAD UTILITY CONFLICTS. THE CONTRACTOR SHALL NOTIFY THE AREA ENGINEER, THE RESIDENT ENGINEER, AND ANY IMPACTED UTILITY COMPANY OF THE CONFLICT AND SHALL COORDINATE AND RESOLVE THE ISSUE PRIOR TO ORDERING MATERIALS, AND PRIOR TO POURING FOUNDATIONS.

7. THE CONTRACTOR SHALL COORDINATE CONSTRUCTION ACTIVITIES WITH UTILITY COMPANIES, LOCAL GOVERNMENT AGENCIES, AND IDOT.

8. RESTORATION OF THE TRAFFIC SIGNAL WORK AREA SHALL BE INCLUDED IN THE RELATED PAY ITEMS SUCH AS FOUNDATION, CONDUIT, HANDHOLE, ETC., AND NO EXTRA COMPENSATION SHALL BE ALLOWED. ALL ROADWAY SURFACES SUCH AS SHOULDERS, MEDIAN, SIDEWALKS, PAVEMENT, ETC. SHALL BE REPLACED IN KIND. ALL DAMAGE TO MOWED LAWN SHALL BE REPLACED WITH AN APPROVED SOD, AND ALL DAMAGE TO UNMOWED FIELDS SHALL BE SEEDED IN ACCORDANCE WITH STANDARD SPECIFICATIONS 252 AND 250 RESPECTIVELY.

9. PARTIAL PAYMENT AS DESCRIBED IN ARTICLE 109.07(b) OF THE STANDARD SPECIFICATIONS WILL NOT BE ALLOWED FOR ITEMS INCLUDED IN THIS CONTRACT.

10. LOCATION WITH PEDESTRIAN EQUIPMENT HAVE BEEN DESIGNED TO BE ADA COMPLIANT. ANY DEVIATIONS FROM THE PLANS FOR TRAFFIC SIGNAL MAST ARM/POST THAT HAVE PEDESTRIAN EQUIPMENT WILL HAVE TO BE APPROVED BY THE ENGINEER TO ENSURE ADA COMPLIANCE.

11. CONTACT GARY SIMS - IDOT OPERATIONS ENGINEER (217) 251-4859, TWO WEEKS IN ADVANCE TO DISCUSS PROPOSED CONSTRUCTION TRAFFIC PLANS AND TO ASSIST WITH SIGNAL TIMINGS.

REMOVAL AND RELOCATION NOTES:

THE FOLLOWING ITEMS SHALL BE REMOVED BY THE CONTRACTOR AND SHALL BE DISPOSED BY THEM OUTSIDE THE RIGHT-OF-WAY AT THEIR EXPENSE. THE SALVAGE VALUE OF THE REMOVED EQUIPMENT SHALL BE REFLECTED IN THE CONTRACT BID PRICE:

1	EACH	CONTROLLER AND CABINET (COMPLETE)
4	EACH	STEEL MAST ARM AND POLE
3	EACH	TRAFFIC SIGNAL POST
4	EACH	PEDESTRIAN SIGNAL HEAD
3	EACH	PEDESTRIAN PUSH-BUTTON
0	EACH	PEDESTRIAN PUSH-BUTTON POST
6	EACH	3-SECTION SIGNAL HEAD
4	EACH	5-SECTION SIGNAL HEAD
1	EACH	SERVICE INSTALLATION
10	EACH	TRAFFIC SIGNAL BACKPLATE
2	EACH	EVP

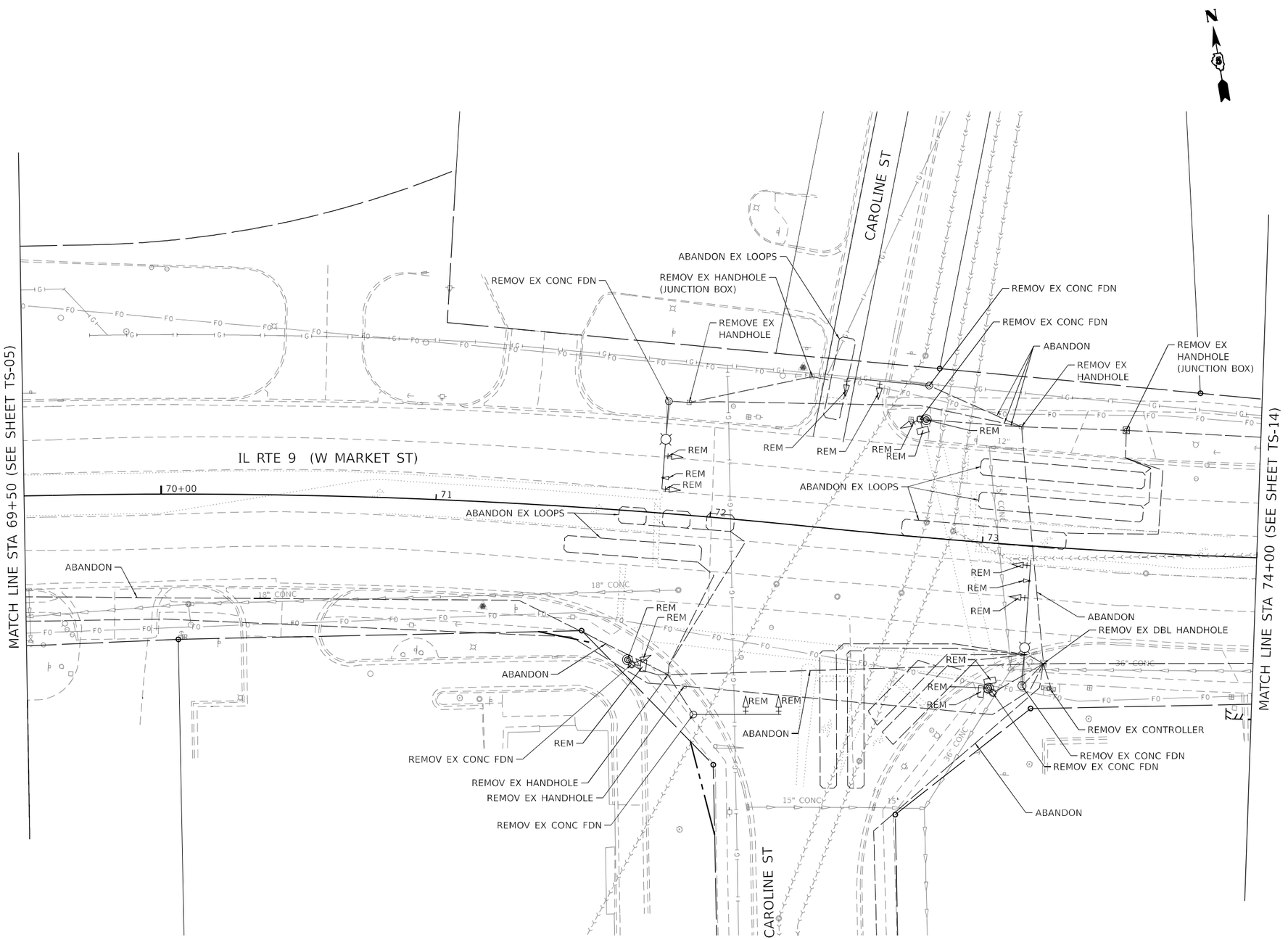

TRAFFIC SIGNAL PLAN LEGEND

ITEM	PROPOSED
MAST ARM ASSEMBLY AND POLE	
STEEL COMBINATION MAST ARM ASSEMBLY AND POLE WITH LUMINAIRE	
SIGNAL POST	
CONTROLLER CABINET	
SERVICE INSTALLATION (P) POLE OR (G) GROUND MOUNT	
SIGNAL HEAD	
SIGNAL HEAD WITH BACK PLATE	
PEDESTRIAN SIGNAL HEAD	
PEDESTRIAN PUSH-BUTTON -APS (ACCESSIBLE PEDESTRIAN PUSH-BUTTON)	APS
PRIORITY VEHICLE DETECTOR	
VIDEO DETECTOR SYSTEM	V
HANDHOLE	
DOUBLE HANDHOLE	
UNDERGROUND CONDUIT (UC)	
PROPOSED SIGN	

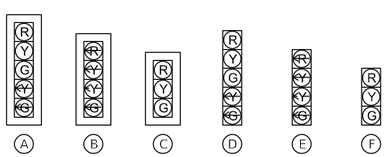

SIGNAL WITH BACKPLATE SIGNAL WITHOUT BACKPLATE

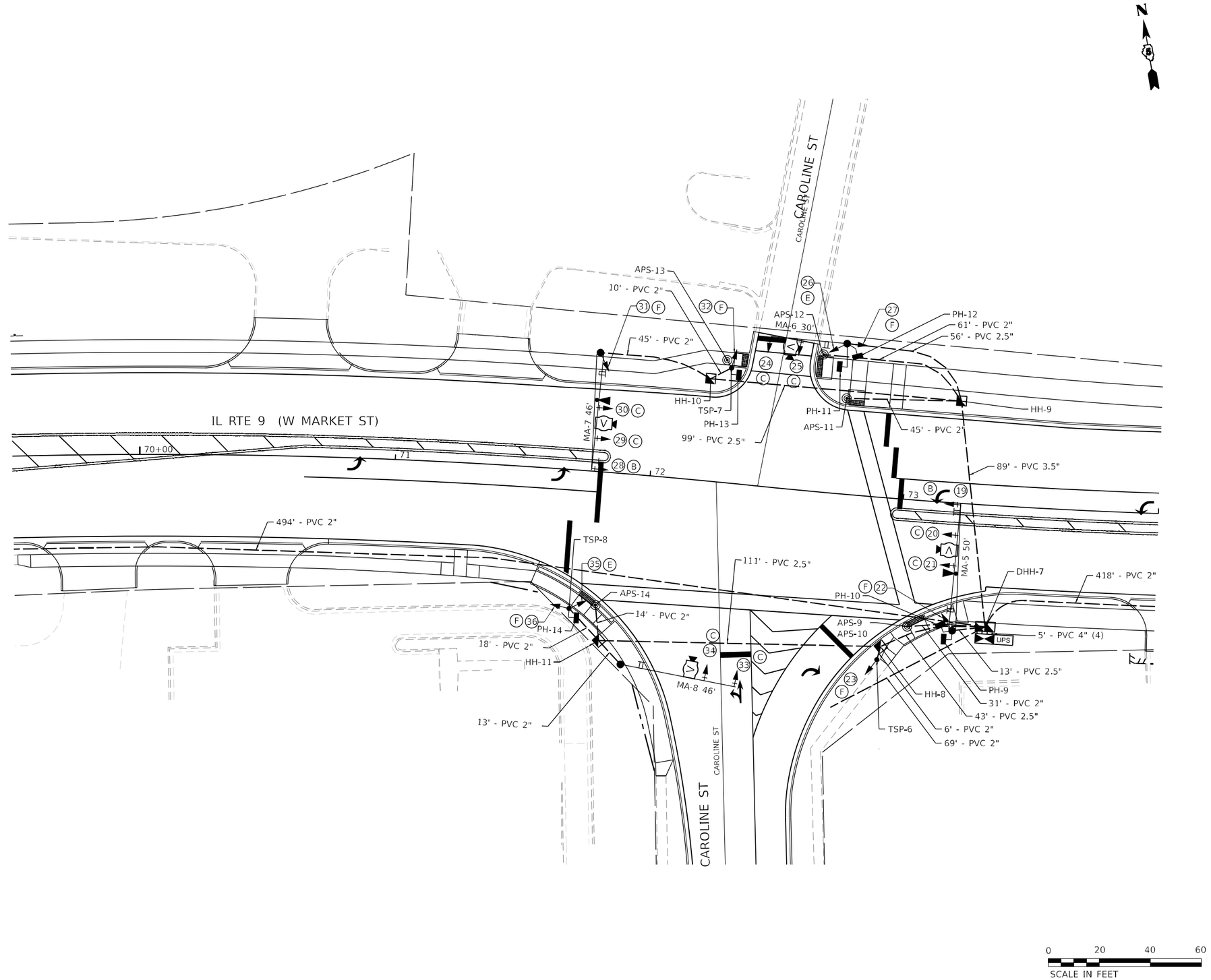

MODEL: Default
FILE NAME: pw://keg-pw.bentley.com:keg-pw-01/Documents/IDOT Projects/17-1137.00 ORD/0_IDOT/CAD_Sheets/D570855-sht010-TS_Market_Caroline.dgn

PROFESSIONAL REGISTRATIONS Illinois Professional Design Firm Professional Engineering Group	200 E. Main St., Suite 100 Belleville, Illinois 62220 618.233.5077 phone 618.233.5077 fax www.kaskaskiaeng.com LICENSE NO. 184.004773 20-5000186	USER NAME = msecrest	DESIGNED - RJO
			DRAWN - RJO
		PLOT SCALE = 40.0000 ' / in.	CHECKED - EJL
		PLOT DATE = 10/11/2023	DATE - 10-02-2023

REVISED -		
REVISED -		
REVISED -		
REVISED -		

STATE OF ILLINOIS
DEPARTMENT OF TRANSPORTATION

PROPOSED TRAFFIC SIGNALS
FAP 693 (IL RTE 9) - W. MARKET ST. & CAROLINE ST.

SCALE: | SHEET 10 OF 26 SHEETS | STA. | TO STA.

F.A.P. RTE.	SECTION	COUNTY	TOTAL SHEETS	SHEET NO.
693	(129,109)RS3(16,4,1)	MCLEAN	218	119
		CONTRACT NO. 70855		
		ILLINOIS	FED. AID PROJECT	

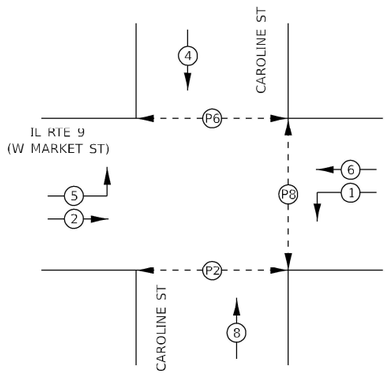

PHASE DESIGNATION DIAGRAM

(2) VEHICULAR MOVEMENT

(P2) – PEDESTRIAN MOVEMENT

NUMBER REFERS TO ASSOCIATED PHASE

CABLE DIAGRAM LEGEND

	ELECTRIC CABLE IN CONDUIT
5/C	NUMBER OF CONDUCTORS IN CABLE
	PROPOSED SERVICE INSTALLATION
NO. 6	AMERICAN WIRE GAUGE (AWG) SIZE 6 CONDUCTORS (SEE GENERAL NOTES)
APS	PEDESTRIAN PUSH BUTTON -(APS) ACCESSIBLE PEDESTRIAN PUSH-BUTTON
	PEDESTRIAN SIGNAL HEAD WITH COUNTDOWN DISPLAY
	EMERGENGY VEHICLE PREEMPTION DETECTOR AND BEACON
V	PROPOSED TRAFFIC SIGNAL VIDEO DETECTOR SYSTEM
	GROUND ROD AT (C) CONTROLLER, (H) HANDHOLE, (P) POST, (M) MAST ARM. OR (S) SERVICE

IL RTE 9 (W MARKET ST)

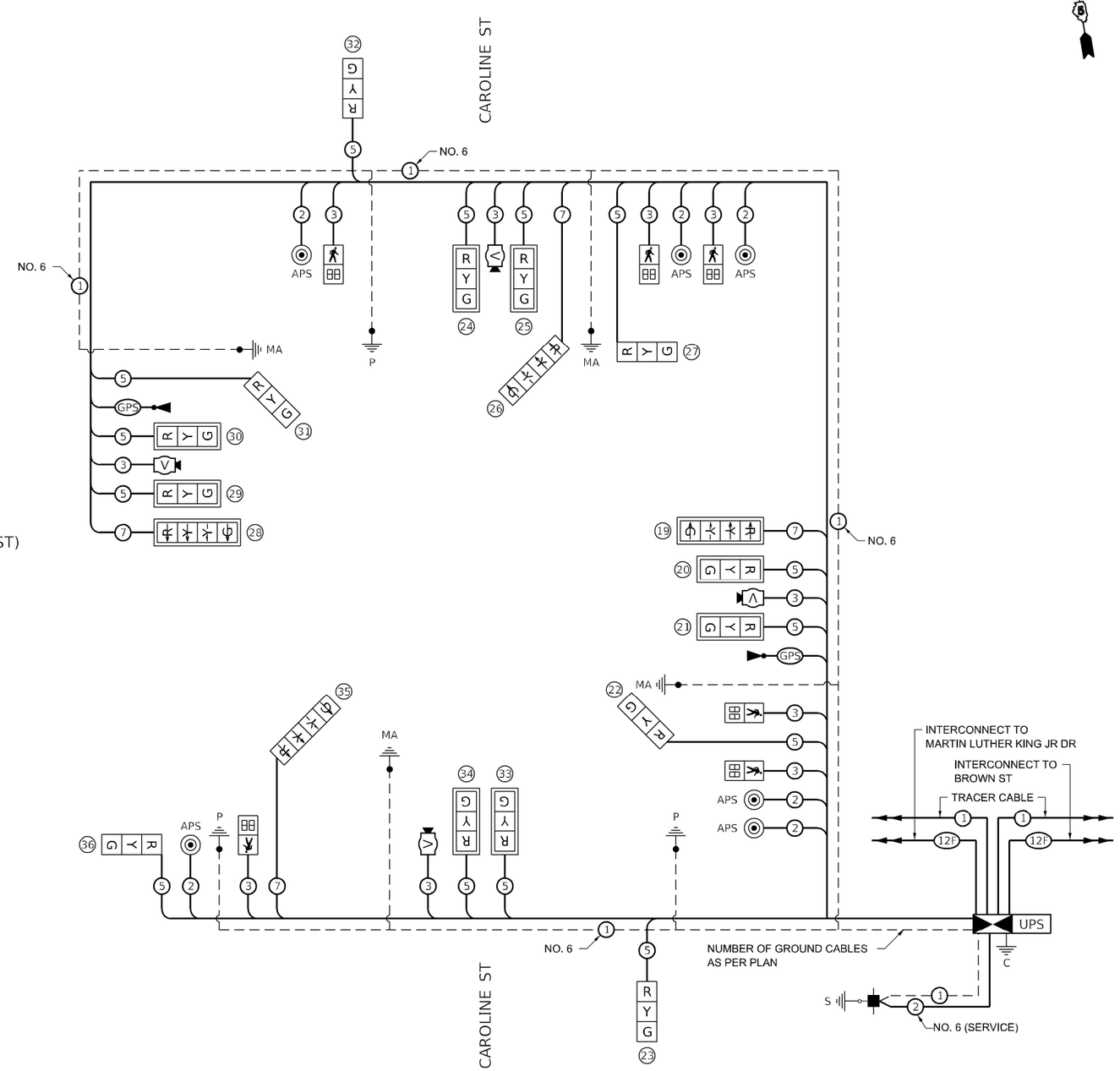

MODEL: Default
FILE NAME: pw://kegpw.bentley.com:keg-pw-01/Documents/IDOT Projects/17-1137.00 ORD/0 IDOT/CAD Sheets/D570855-sht011-TS Market Caroline Cable.dgn

Kaskaskia Engineering Group, LLC — 300 E. Main St., Suite 100, Belleville, Illinois 62220, 618.233.5877 phone, 618.233.5975 fax, www.kaskaskiaeng.com; PROFESSIONAL DESIGN STATIONS: Illinois Professional Design Firm, Professional Engineering Group; LICENSE NO.: 184.005775, 20-5800585	USER NAME = mscrest	DESIGNED - RJO	REVISED -	STATE OF ILLINOIS DEPARTMENT OF TRANSPORTATION	TRAFFIC SIGNAL CABLE DIAGRAM FAP 693 (IL RTE 9) - W. MARKET ST. & CAROLINE ST.
		DRAWN - RJO	REVISED -		
	PLOT SCALE = 40.0000 ' / in.	CHECKED - EJL	REVISED -		
	PLOT DATE = 10/11/2023	DATE - 10-02-2023	REVISED -		SCALE: SHEET 11 OF 26 SHEETS STA. TO STA.

F.A.P. RTE.	SECTION	COUNTY	TOTAL SHEETS	SHEET NO.
693	(129,109)RS3(16,4,1)	MCLEAN	218	120
		CONTRACT NO. 70855		
	ILLINOIS FED. AID PROJECT			

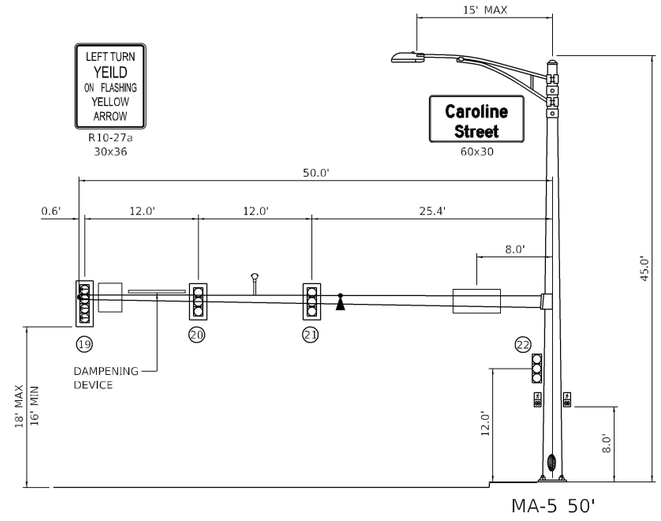

MA-5 50'

EASTBOUND TRAFFIC SIGNAL
IL RTE 9 (MARKET ST) & CAROLINE ST

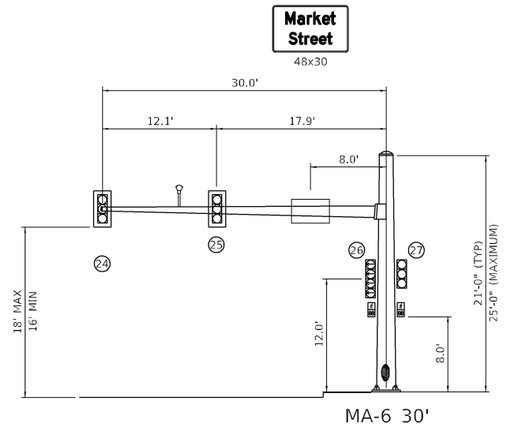

MA-6 30'

NORTHBOUND TRAFFIC SIGNAL
IL RTE 9 (MARKET ST) & CAROLINE ST

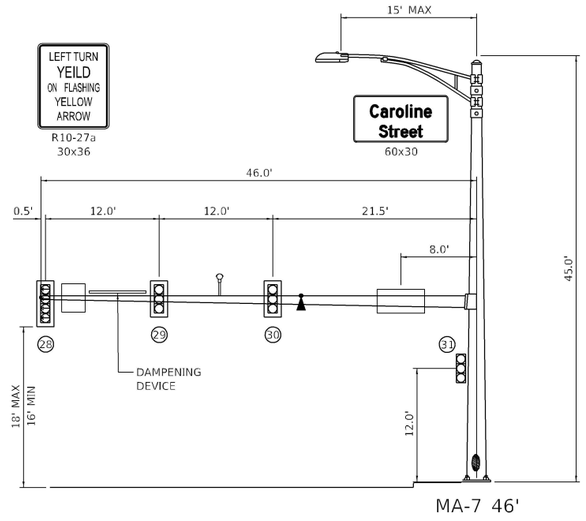

MA-7 46'

WESTBOUND TRAFFIC SIGNAL
IL RTE 9 (MARKET ST) & CAROLINE ST

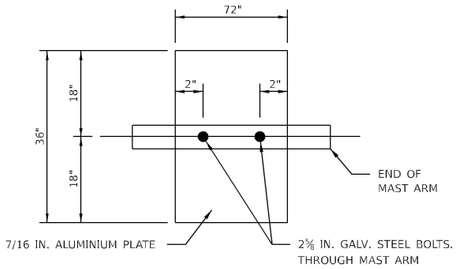

DAMPENING PLATE DETAIL

(TOP VIEW) INCIDENTAL TO MAST ARM QUANTITY
NOT TO SCALE

NOTE: FOR MAST ARMS OVER 42' INSTALL DAMPENING DEVICE. DAMPENING DEVICE SHALL CONSIST OF A 72" X 36" TYPE 1 UNPAINTED ALUMINUM SIGN STOCK MOUNTED HORIZONTALLY ON TOP OF MAST ARM WITH THE 36" LENGTH PERPENDICULAR TO THE ARM. THE COST OF THE DAMPENING DEVICE IS INCLUDED IN THE COST OF THE MAST ARM PAY ITEM.

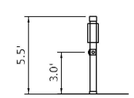

APS-9 & APS-10
SOUTHEAST QUAD

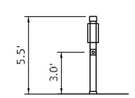

APS-11
NORTHEAST QUAD

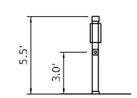

APS-12
NORTHEAST QUAD

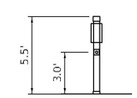

APS-14
SOUTHWEST QUAD

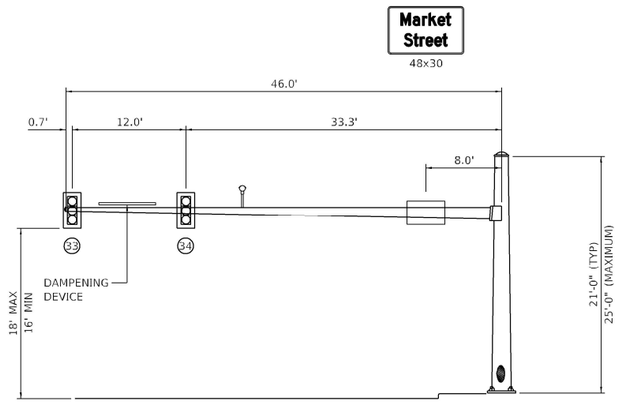

MA-8 46'

SOUTHBOUND TRAFFIC SIGNAL
IL RTE 9 (MARKET ST) & CAROLINE ST

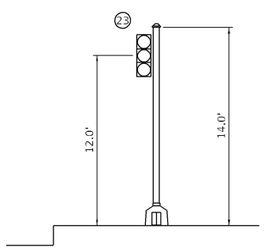

TSP-6
SOUTHEAST QUAD

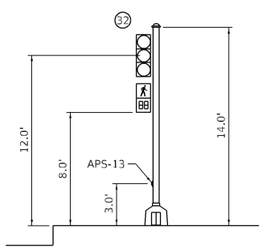

TSP-7
NORTHWEST QUAD

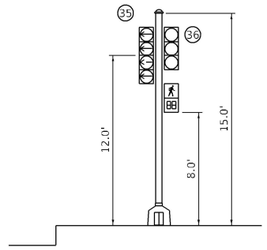

TSP-8
SOUTHWEST QUAD

MODEL: Default
FILE NAME: pw://keg-pw.bentley.com:keg-pw-01/Documents/IDOT Projects/17-1137.00 ORD/0 IDOT/CAD Sheets/D570855-sht012-TS Market Caroline Details.dgn

Kaskaskia Engineering Group, LLC
PROFESSIONAL REGISTRATIONS
Illinois Professional Design Firm
Professional Engineering Group
LICENSE NO.
184.004773
20-5000186

USER NAME = msecrest	DESIGNED - RJO	REVISED -	
	DRAWN - RJO	REVISED -	
PLOT SCALE = 16.0000 ' / in.	CHECKED - EJL	REVISED -	
PLOT DATE = 10/11/2023	DATE - 10-02-2023	REVISED -	

STATE OF ILLINOIS
DEPARTMENT OF TRANSPORTATION

TRAFFIC SIGNAL DETAILS
FAP 693 (IL RTE 9) - W. MARKET ST. & CAROLINE ST.

SCALE: NTS | SHEET 12 OF 26 SHEETS | STA. TO STA.

F.A.P. RTE.	SECTION	COUNTY	TOTAL SHEETS	SHEET NO.
693	(129,109)RS3(16,4,1)	MCLEAN	218	121
		CONTRACT NO. 70855		
		ILLINOIS	FED. AID PROJECT	

GENERAL SIGNAL NOTES:

1. BEFORE STARTING ANY EXCAVATION, THE CONTRACTOR SHALL CALL "J.U.L.I.E." AT (800)-892-0123 OR 811 FOR FIELD LOCATIONS OF BURIED ELECTRIC, TELEPHONE AND GAS, 48-HOUR NOTIFICATION IS REQUIRED.

2. THE CONTRACTOR SHALL CONTACT THE TRAFFIC CONTROL SUPERVISOR AT 72-HOURS IN ADVANCE OF BEGINNING WORK.

3. IT SHALL BE THE CONTRACTOR'S RESPONSIBILITY TO VERIFY ALL DIMENSIONS AND CONDITIONS EXISTING IN THE FIELD PRIOR TO ORDERING MATERIALS AND BEGINNING CONSTRUCTION. THIS SHALL INCLUDED LOCATING THE MAST ARM FOUNDATIONS AND VERIFYING THE MAST ARM LENGTHS.

4. THE EXACT LOCATION OF ALL UTILITIES SHALL BE FIELD VERIFIED BY THE CONTRACTOR BEFORE ORDERING ANY MATERIALS AND STARTING ANY WORK. FOR LOCATIONS OF UTILITIES, LOCALLY OWNED EQUIPMENT, LEASED ENFORCEMENT CAMERA SYSTEM FACILITIES AND IDOT UNDERGROUND FACILITIES, CONTACT THE LOCATION COUNTIES, MUNICIPALITIES AND IDOT FOR LOCATES, THE CONTRACTOR SHALL CALL"J.U.L.I.E." AT (800)-892-0123.

5. IF THE CONTRACT REQUIRES THE SERVICES OF AN ELECTRICAL CONTRACTOR, THE CONTRACTOR SHALL BE RESPONSIBLE AT HIS/HER OWN EXPENSE FOR LOCATING EXISTING IDOT ELECTRICAL FACILITIES PRIOR TO PERFORMING ANY WORK. IF THIS CONTRACT DOES NOT REQUIRE THE SERVICES OF AN ELECTRICAL CONTRACTOR, THE CONTRACTOR MAY REQUEST ON FREE LOCATE FOR EXISTING IDOT ELECTRICAL FACILITIES FROM THE DISTRICT TWO ELECTRICAL MAINTENANCE CONTRACTOR PRIOR TO THE START OF ANY WORK. ADDITIONAL REQUEST MAY BE AT THE EXPENSE OF THE CONTRACTOR. THE LOCATION OF UNDERGROUND TRAFFIC FACILITIES DOES NOT RELIEVE THE CONTRACTOR OF THEIR RESPONSIBILITY TO REPAIR ANY FACILITIES DAMAGED DURING THE CONSTRUCTION AT THEIR EXPENSE.

6. THE CONTRACTOR SHALL CHECK THE PROPOSED TRAFFIC SIGNAL EQUIPMENT LOCATIONS FOR UNDERGROUND AND OVERHEAD UTILITY CONFLICTS. THE CONTRACTOR SHALL NOTIFY THE AREA ENGINEER, THE RESIDENT ENGINEER, AND ANY IMPACTED UTILITY COMPANY OF THE CONFLICT AND SHALL COORDINATE AND RESOLVE THE ISSUE PRIOR TO ORDERING MATERIALS, AND PRIOR TO POURING FOUNDATIONS.

7. THE CONTRACTOR SHALL COORDINATE CONSTRUCTION ACTIVITIES WITH UTILITY COMPANIES, LOCAL GOVERNMENT AGENCIES, AND IDOT.

8. RESTORATION OF THE TRAFFIC SIGNAL WORK AREA SHALL BE INCLUDED IN THE RELATED PAY ITEMS SUCH AS FOUNDATION, CONDUIT, HANDHOLE, ETC., AND NO EXTRA COMPENSATION SHALL BE ALLOWED. ALL ROADWAY SURFACES SUCH AS SHOULDERS, MEDIAN, SIDEWALKS, PAVEMENT, ETC. SHALL BE REPLACED IN KIND. ALL DAMAGE TO MOWED LAWN SHALL BE REPLACED WITH AN APPROVED SOD, AND ALL DAMAGE TO UNMOWED FIELDS SHALL BE SEEDED IN ACCORDANCE WITH STANDARD SPECIFICATIONS 252 AND 250 RESPECTIVELY.

9. PARTIAL PAYMENT AS DESCRIBED IN ARTICLE 109.07(b) OF THE STANDARD SPECIFICATIONS WILL NOT BE ALLOWED FOR ITEMS INCLUDED IN THIS CONTRACT.

10. LOCATION WITH PEDESTRIAN EQUIPMENT HAVE BEEN DESIGNED TO BE ADA COMPLIANT. ANY DEVIATIONS FROM THE PLANS FOR TRAFFIC SIGNAL MAST ARM/POST THAT HAVE PEDESTRIAN EQUIPMENT WILL HAVE TO BE APPROVED BY THE ENGINEER TO ENSURE ADA COMPLIANCE.

11. CONTACT GARY SIMS - IDOT OPERATIONS ENGINEER (217) 251-4859, TWO WEEKS IN ADVANCE TO DISCUSS PROPOSED CONSTRUCTION TRAFFIC PLANS AND TO ASSIST WITH SIGNAL TIMINGS.

REMOVAL AND RELOCATION NOTES:

THE FOLLOWING ITEMS SHALL BE REMOVED BY THE CONTRACTOR AND SHALL BE DISPOSED BY THEM OUTSIDE THE RIGHT-OF-WAY AT THEIR EXPENSE. THE SALVAGE VALUE OF THE REMOVED EQUIPMENT SHALL BE REFLECTED IN THE CONTRACT BID PRICE:

1	EACH	CONTROLLER AND CABINET (COMPLETE)
2	EACH	STEEL MAST ARM AND POLE
3	EACH	TRAFFIC SIGNAL POST
4	EACH	PEDESTRIAN SIGNAL HEAD
4	EACH	PEDESTRIAN PUSH-BUTTON
0	EACH	PEDESTRIAN PUSH-BUTTON POST
3	EACH	3-SECTION SIGNAL HEAD
4	EACH	5-SECTION SIGNAL HEAD
1	EACH	SERVICE INSTALLATION
9	EACH	TRAFFIC SIGNAL BACKPLATE
2	EACH	EVP

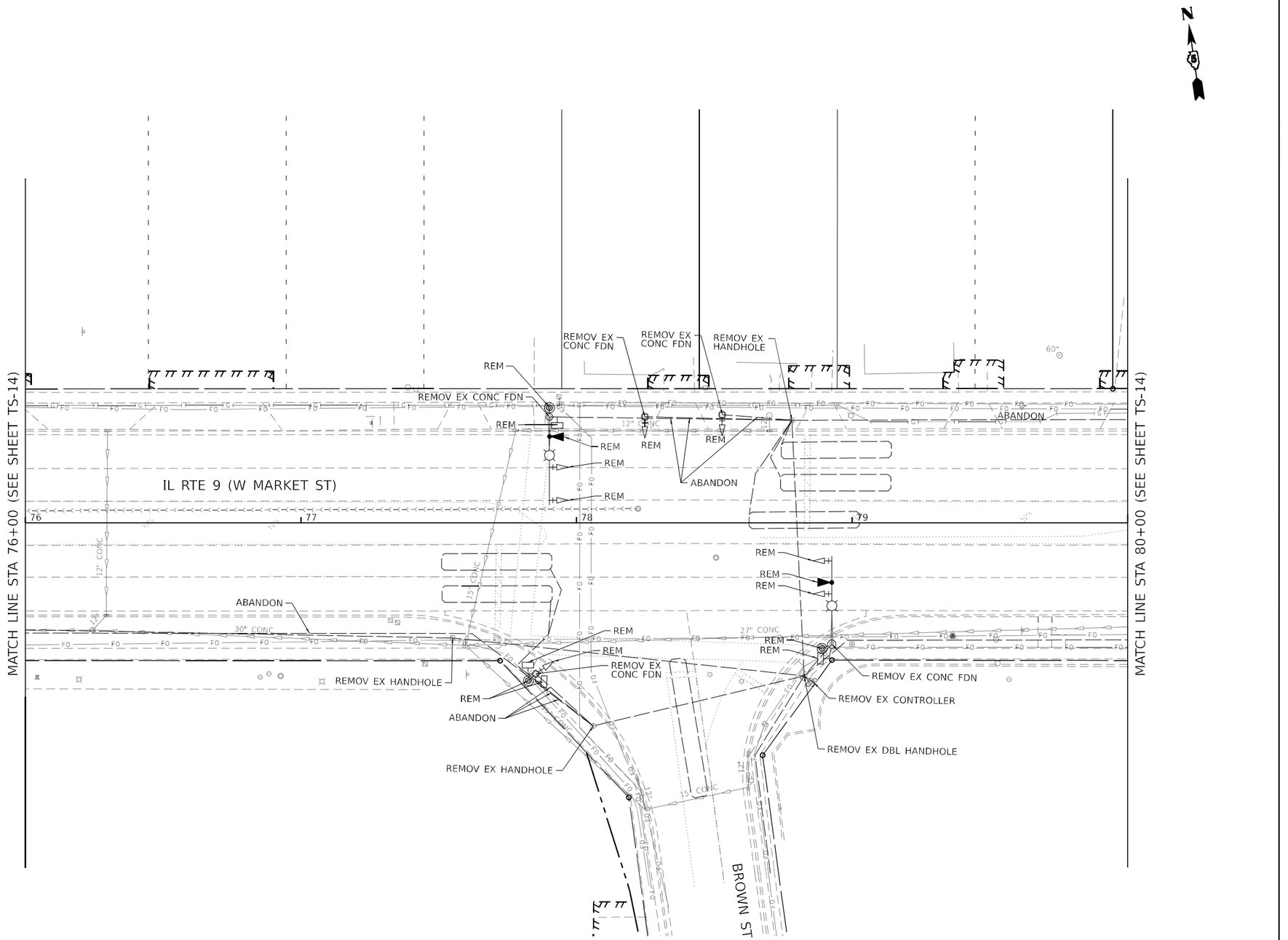

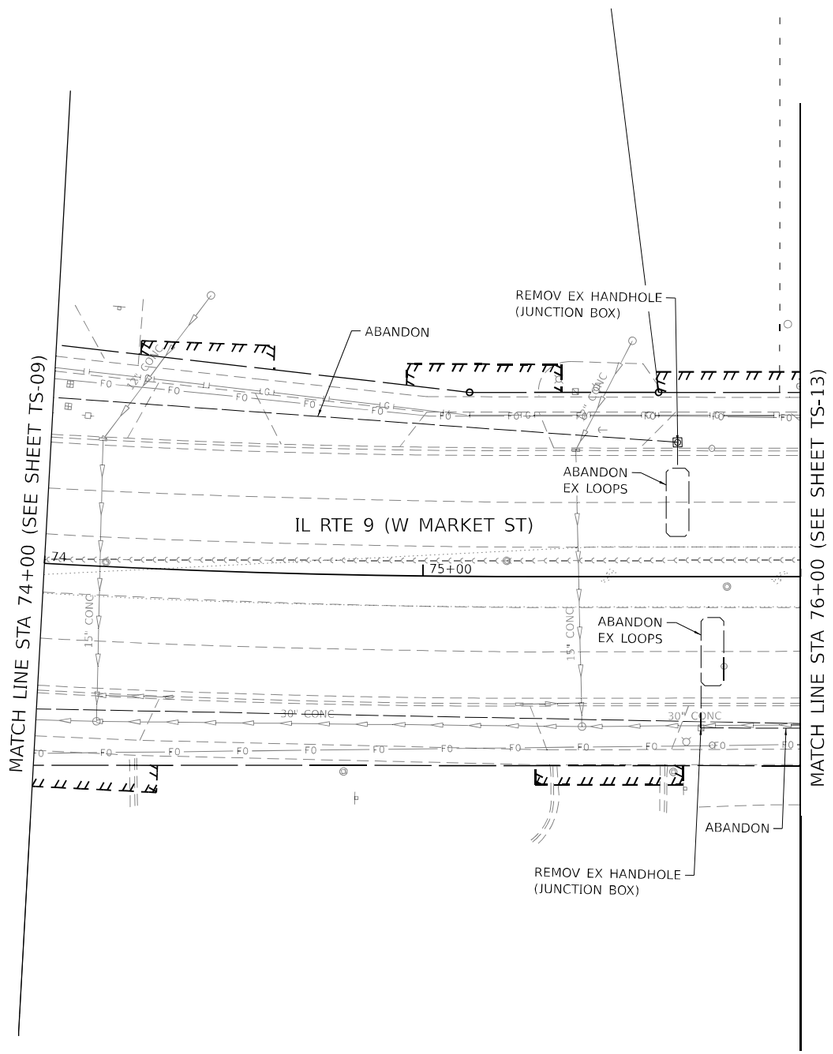

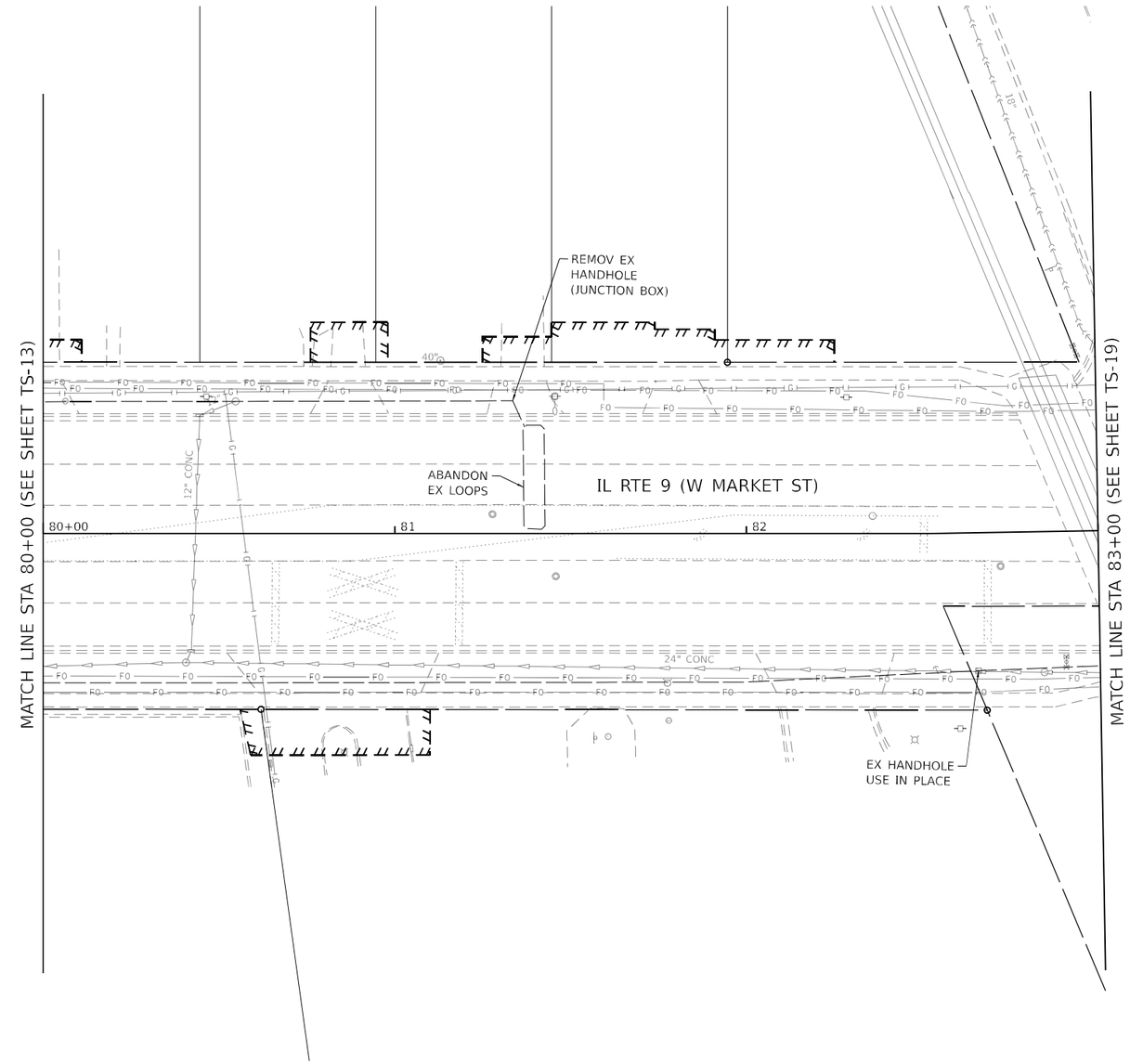

0 20 40 60
SCALE IN FEET

MODEL: Default
FILE NAME: pw://keg-pw.bentley.com:keg-pw-01/Documents/IDOT Projects/17-1137.00 ORD/0_IDOT/CAD_Sheets/D570855-sht014-TS_Market_Brown_Rem.dgn

Kaskaskia Engineering Group, LLC
200 E. Main St., Suite 100
Belleville, Illinois 62220
618.233.5677 phone
618.233.5677 fax
www.kaskaskiaeng.com
PROFESSIONAL REGISTRATIONS
Illinois Professional Design Firm
Professional Engineering Group
LICENSE NO.
184.004773
20-3000186

USER NAME = msecrest	DESIGNED - RJO	REVISED -	
	DRAWN - RJO	REVISED -	
PLOT SCALE = 40.0000 ' / in.	CHECKED - EJL	REVISED -	
PLOT DATE = 10/11/2023	DATE - 10-02-2023	REVISED -	

STATE OF ILLINOIS
DEPARTMENT OF TRANSPORTATION

EXISTING TRAFFIC SIGNAL EQUIPMENT REMOVAL
FAP 693 (IL RTE 9) - W. MARKET ST. & BROWN ST.

SCALE: | SHEET 14 OF 26 SHEETS | STA. | TO STA.

F.A.P. RTE.	SECTION	COUNTY	TOTAL SHEETS	SHEET NO.
693	(129,109)RS3(16,4,1)	MCLEAN	218	123
		CONTRACT NO. 70855		
		ILLINOIS	FED. AID PROJECT	

TRAFFIC SIGNAL PLAN LEGEND

ITEM	PROPOSED
MAST ARM ASSEMBLY AND POLE	
STEEL COMBINATION MAST ARM ASSEMBLY AND POLE WITH LUMINAIRE	
SIGNAL POST	
CONTROLLER CABINET	
SERVICE INSTALLATION (P) POLE OR (G) GROUND MOUNT	
SIGNAL HEAD	
SIGNAL HEAD WITH BACK PLATE	
PEDESTRIAN SIGNAL HEAD	
PEDESTRIAN PUSH-BUTTON -APS (ACCESSIBLE PEDESTRIAN PUSH-BUTTON)	APS
PRIORITY VEHICLE DETECTOR	
VIDEO DETECTOR SYSTEM	V
HANDHOLE	
DOUBLE HANDHOLE	
UNDERGROUND CONDUIT (UC)	
PROPOSED SIGN	

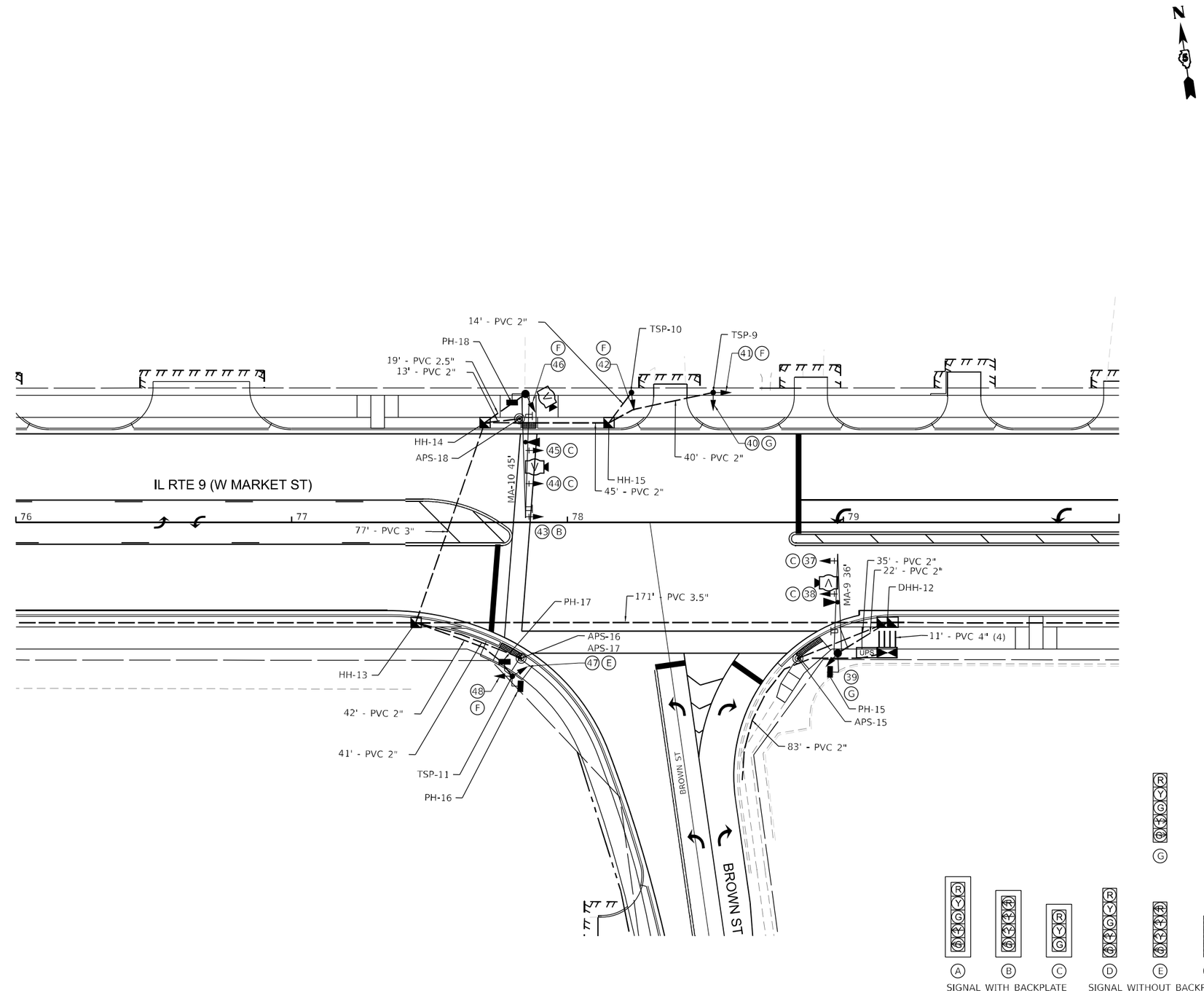

MODEL: Default
FILE NAME: pw://keg-pw.bentley.com:keg-pw-01/Documents/IDOT Projects/17-1137.00 ORD/0_IDOT/CAD_Sheets/D570855-sht015-TS_Market_Brown.dgn

Kaskaskia Engineering Group, LLC
PROFESSIONAL REGISTRATIONS
Illinois Professional Design Firm
Professional Engineering Group

USER NAME = msecrest	DESIGNED - RJO	REVISED -	
	DRAWN - RJO	REVISED -	
PLOT SCALE = 40.0078 ' / in.	CHECKED - EJL	REVISED -	
PLOT DATE = 10/11/2023	DATE - 10-02-2023	REVISED -	

STATE OF ILLINOIS
DEPARTMENT OF TRANSPORTATION

PROPOSED TRAFFIC SIGNALS
FAP 693 (IL RTE 9) - W. MARKET ST. & BROWN ST.

SCALE: | SHEET 15 OF 26 SHEETS | STA. | TO STA.

F.A.P. RTE.	SECTION	COUNTY	TOTAL SHEETS	SHEET NO.
693	(129,109)RS3(16,4,1)	MCLEAN	218	124
		CONTRACT NO. 70855		
		ILLINOIS	FED. AID PROJECT	

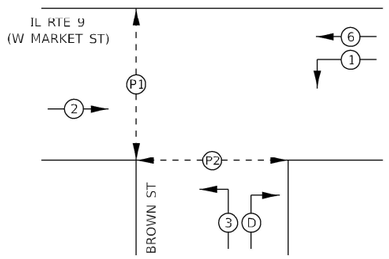

PHASE DESIGNATION DIAGRAM

- 2 — VEHICULAR MOVEMENT
- P2 — PEDESTRIAN MOVEMENT

NUMBER REFERS TO ASSOCIATED PHASE

CABLE DIAGRAM LEGEND

	ELECTRIC CABLE IN CONDUIT
5/C	NUMBER OF CONDUCTORS IN CABLE
	PROPOSED SERVICE INSTALLATION
NO. 6	AMERICAN WIRE GAUGE (AWG) SIZE 6 CONDUCTORS (SEE GENERAL NOTES)
APS	PEDESTRIAN PUSH BUTTON -(APS) ACCESSIBLE PEDESTRIAN PUSH-BUTTON
	PEDESTRIAN SIGNAL HEAD WITH COUNTDOWN DISPLAY
	EMERGENGY VEHICLE PREEMPTION DETECTOR AND BEACON
V	PROPOSED TRAFFIC SIGNAL VIDEO DETECTOR SYSTEM
	GROUND ROD AT (C) CONTROLLER, (H) HANDHOLE, (P) POST, (M) MAST ARM. OR (S) SERVICE

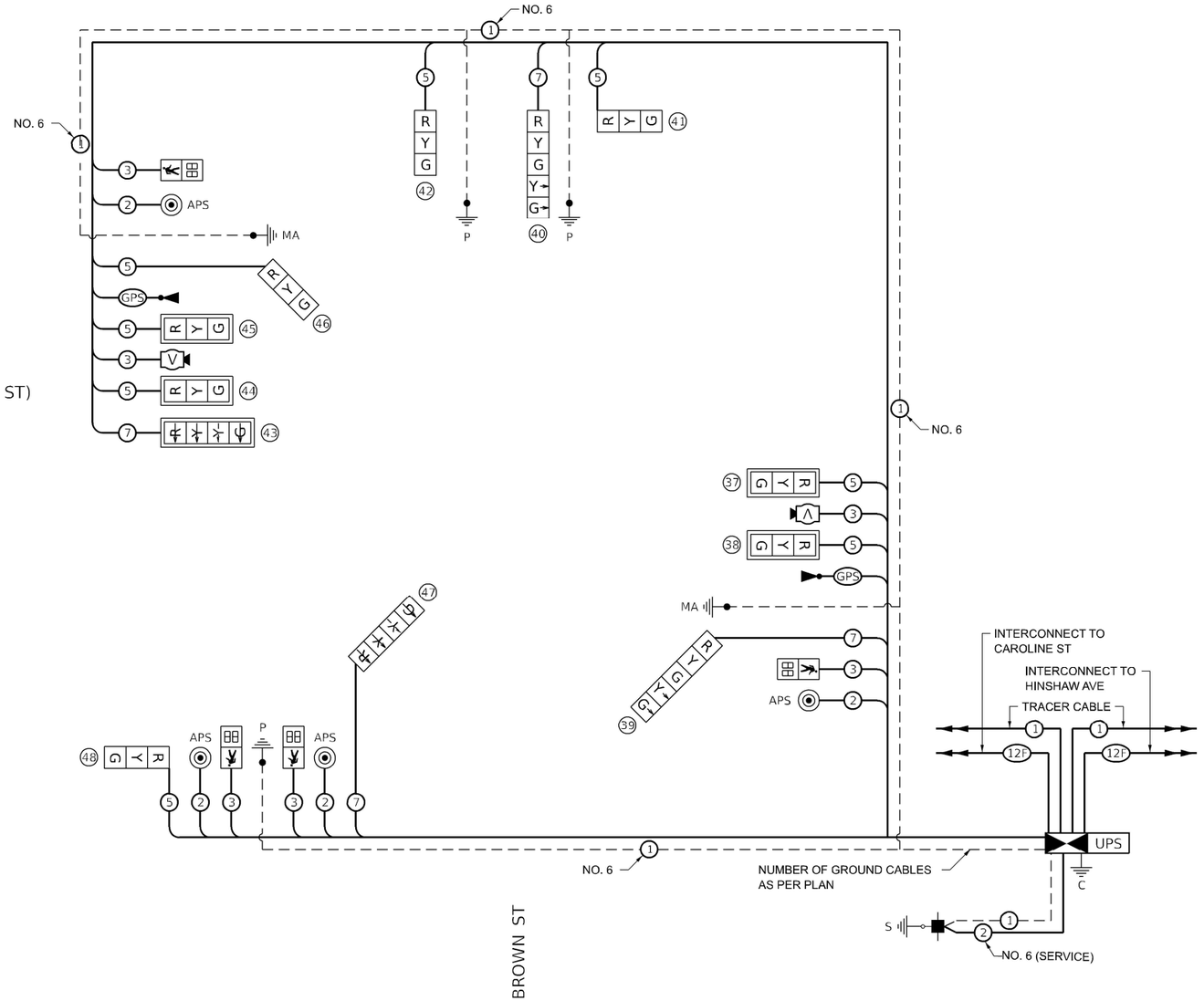

MODEL: Default
FILE NAME: pw://keg-pw.bentley.com:keg-pw-01/Documents/IDOT Projects/17-1137.00 ORD/0 IDOT/CAD Sheets/D570855-sht016-TS Market Brown Cable.dgn

Kaskaskia Engineering Group, LLC
PROFESSIONAL REGISTRATIONS
Illinois Professional Design Firm
Professional Engineering Group

USER NAME = msecrest	DESIGNED - RJO	REVISED -	
	DRAWN - RJO	REVISED -	
PLOT SCALE = 40.0000 ' / in.	CHECKED - EJL	REVISED -	
PLOT DATE = 10/11/2023	DATE - 10-02-2023	REVISED -	

STATE OF ILLINOIS
DEPARTMENT OF TRANSPORTATION

TRAFFIC SIGNAL CABLE DIAGRAM
FAP 693 (IL RTE 9) - W. MARKET ST. & BROWN ST.

SCALE: | SHEET 16 OF 26 SHEETS | STA. TO STA.

F.A.P. RTE.	SECTION	COUNTY	TOTAL SHEETS	SHEET NO.
693	(129,109)RS3(16,4,1)	MCLEAN	218	125

CONTRACT NO. 70855

ILLINOIS | FED. AID PROJECT

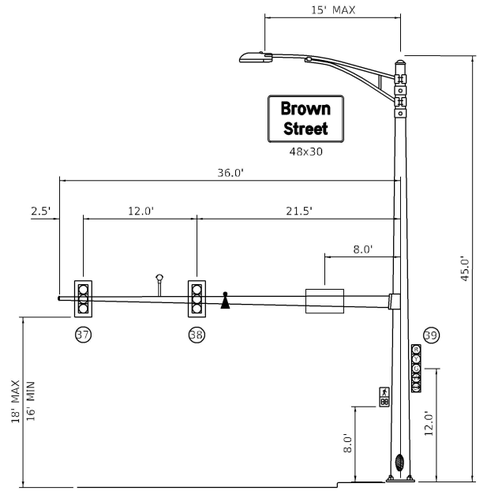

MA-9 36'

EASTBOUND TRAFFIC SIGNAL
IL RTE 9 (MARKET ST) & BROWN ST

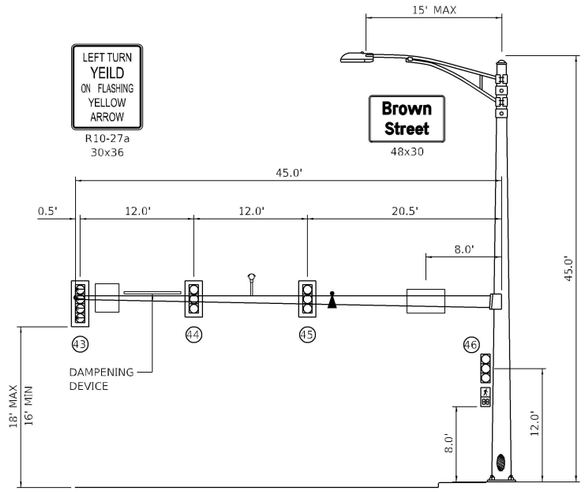

MA-10 45'

WESTBOUND TRAFFIC SIGNAL
IL RTE 9 (MARKET ST) & BROWN ST

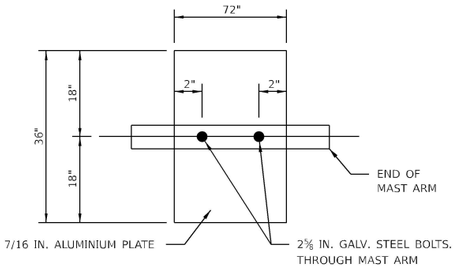

DAMPENING PLATE DETAIL

(TOP VIEW) INCIDENTAL TO MAST ARM QUANTITY

NOT TO SCALE

NOTE: FOR MAST ARMS OVER 42' INSTALL DAMPENING DEVICE. DAMPENING DEVICE SHALL CONSIST OF A 72" X 36" TYPE 1 UNPAINTED ALUMINUM SIGN STOCK MOUNTED HORIZONTALLY ON TOP OF MAST ARM WITH THE 36" LENGTH PERPENDICULAR TO THE ARM. THE COST OF THE DAMPENING DEVICE IS INCLUDED IN THE COST OF THE MAST ARM PAY ITEM.

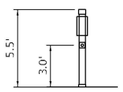

APS-15
SOUTHEAST QUAD

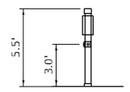

APS-16 & APS 17
SOUTHWEST QUAD

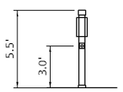

APS-18
NORTHWEST QUAD

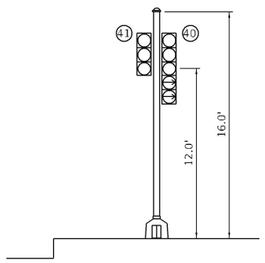

TSP-9
NORTHEAST QUAD

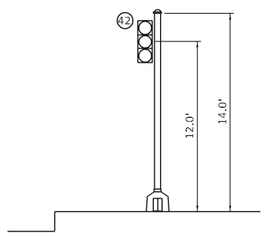

TSP-10
NORTHWEST QUAD

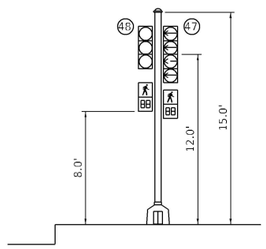

TSP-11
SOUTHWEST QUAD

MODEL: Default
FILE NAME: pw:\\fasp-pw.bentley.com:fasp-pw-01\Documents\IDOT Projects\17-1137.00 ORD\0 IDOT\CAD Sheets\D5708S-std017-TS Market Brown Details.dgn

Kaskaskia Engineering Group, LLC
300 E. Main St., Suite 300, Barlow, Illinois 62205
618.453.5077 phone
618.233.5077 fax
www.kaskaskiaeng.com
PROFESSIONAL ENGINEERING
Illinois Professional Design Firm: Professional Engineering Group
LICENSE NO. 184.005773
20-5880165

USER NAME = mscrest	DESIGNED - RJO	REVISED -
	DRAWN - RJO	REVISED -
PLOT SCALE = 16.0000 ' / in.	CHECKED - EJL	REVISED -
PLOT DATE = 10/11/2023	DATE - 10-02-2023	REVISED -

STATE OF ILLINOIS
DEPARTMENT OF TRANSPORTATION

TRAFFIC SIGNAL DETAILS
FAP 693 (IL RTE 9) - W. MARKET ST. & BROWN ST.

SCALE: NTS | SHEET 17 OF 26 SHEETS | STA. | TO STA.

F.A.P. RTE.	SECTION	COUNTY	TOTAL SHEETS	SHEET NO.
693	(129,109)RS3(16,4,1)	MCLEAN	218	126
		CONTRACT NO. 70855		
		ILLINOIS	FED. AID PROJECT	

GENERAL SIGNAL NOTES:

1. BEFORE STARTING ANY EXCAVATION, THE CONTRACTOR SHALL CALL "J.U.L.I.E." AT (800)-892-0123 OR 811 FOR FIELD LOCATIONS OF BURIED ELECTRIC, TELEPHONE AND GAS, 48-HOUR NOTIFICATION IS REQUIRED.

2. THE CONTRACTOR SHALL CONTACT THE TRAFFIC CONTROL SUPERVISOR AT 72-HOURS IN ADVANCE OF BEGINNING WORK.

3. IT SHALL BE THE CONTRACTOR'S RESPONSIBILITY TO VERIFY ALL DIMENSIONS AND CONDITIONS EXISTING IN THE FIELD PRIOR TO ORDERING MATERIALS AND BEGINNING CONSTRUCTION. THIS SHALL INCLUDED LOCATING THE MAST ARM FOUNDATIONS AND VERIFYING THE MAST ARM LENGTHS.

4. THE EXACT LOCATION OF ALL UTILITIES SHALL BE FIELD VERIFIED BY THE CONTRACTOR BEFORE ORDERING ANY MATERIALS AND STARTING ANY WORK. FOR LOCATIONS OF UTILITIES, LOCALLY OWNED EQUIPMENT, LEASED ENFORCEMENT CAMERA SYSTEM FACILITIES AND IDOT UNDERGROUND FACILITIES, CONTACT THE LOCATION COUNTIES, MUNICIPALITIES AND IDOT FOR LOCATES, THE CONTRACTOR SHALL CALL"J.U.L.I.E." AT (800)-892-0123.

5. IF THE CONTRACT REQUIRES THE SERVICES OF AN ELECTRICAL CONTRACTOR, THE CONTRACTOR SHALL BE RESPONSIBLE AT HIS/HER OWN EXPENSE FOR LOCATING EXISTING IDOT ELECTRICAL FACILITIES PRIOR TO PERFORMING ANY WORK. IF THIS CONTRACT DOES NOT REQUIRE THE SERVICES OF AN ELECTRICAL CONTRACTOR, THE CONTRACTOR MAY REQUEST ON FREE LOCATE FOR EXISTING IDOT ELECTRICAL FACILITIES FROM THE DISTRICT TWO ELECTRICAL MAINTENANCE CONTRACTOR PRIOR TO THE START OF ANY WORK. ADDITIONAL REQUEST MAY BE AT THE EXPENSE OF THE CONTRACTOR. THE LOCATION OF UNDERGROUND TRAFFIC FACILITIES DOES NOT RELIEVE THE CONTRACTOR OF THEIR RESPONSIBILITY TO REPAIR ANY FACILITIES DAMAGED DURING THE CONSTRUCTION AT THEIR EXPENSE.

6. THE CONTRACTOR SHALL CHECK THE PROPOSED TRAFFIC SIGNAL EQUIPMENT LOCATIONS FOR UNDERGROUND AND OVERHEAD UTILITY CONFLICTS. THE CONTRACTOR SHALL NOTIFY THE AREA ENGINEER, THE RESIDENT ENGINEER, AND ANY IMPACTED UTILITY COMPANY OF THE CONFLICT AND SHALL COORDINATE AND RESOLVE THE ISSUE PRIOR TO ORDERING MATERIALS, AND PRIOR TO POURING FOUNDATIONS.

7. THE CONTRACTOR SHALL COORDINATE CONSTRUCTION ACTIVITIES WITH UTILITY COMPANIES, LOCAL GOVERNMENT AGENCIES, AND IDOT.

8. RESTORATION OF THE TRAFFIC SIGNAL WORK AREA SHALL BE INCLUDED IN THE RELATED PAY ITEMS SUCH AS FOUNDATION, CONDUIT, HANDHOLE, ETC., AND NO EXTRA COMPENSATION SHALL BE ALLOWED. ALL ROADWAY SURFACES SUCH AS SHOULDERS, MEDIAN, SIDEWALKS, PAVEMENT, ETC. SHALL BE REPLACED IN KIND. ALL DAMAGE TO MOWED LAWN SHALL BE REPLACED WITH AN APPROVED SOD, AND ALL DAMAGE TO UNMOWED FIELDS SHALL BE SEEDED IN ACCORDANCE WITH STANDARD SPECIFICATIONS 252 AND 250 RESPECTIVELY.

9. PARTIAL PAYMENT AS DESCRIBED IN ARTICLE 109.07(b) OF THE STANDARD SPECIFICATIONS WILL NOT BE ALLOWED FOR ITEMS INCLUDED IN THIS CONTRACT.

10. LOCATION WITH PEDESTRIAN EQUIPMENT HAVE BEEN DESIGNED TO BE ADA COMPLIANT. ANY DEVIATIONS FROM THE PLANS FOR TRAFFIC SIGNAL MAST ARM/POST THAT HAVE PEDESTRIAN EQUIPMENT WILL HAVE TO BE APPROVED BY THE ENGINEER TO ENSURE ADA COMPLIANCE.

11. CONTACT GARY SIMS - IDOT OPERATIONS ENGINEER (217) 251-4859, TWO WEEKS IN ADVANCE TO DISCUSS PROPOSED CONSTRUCTION TRAFFIC PLANS AND TO ASSIST WITH SIGNAL TIMINGS.

REMOVAL AND RELOCATION NOTES:

THE FOLLOWING ITEMS SHALL BE REMOVED BY THE CONTRACTOR AND SHALL BE DISPOSED BY THEM OUTSIDE THE RIGHT-OF-WAY AT THEIR EXPENSE. THE SALVAGE VALUE OF THE REMOVED EQUIPMENT SHALL BE REFLECTED IN THE CONTRACT BID PRICE:

1	EACH	CONTROLLER AND CABINET (COMPLETE)
4	EACH	STEEL MAST ARM AND POLE
0	EACH	TRAFFIC SIGNAL POST
8	EACH	PEDESTRIAN SIGNAL HEAD
4	EACH	PEDESTRIAN PUSH-BUTTON
0	EACH	PEDESTRIAN PUSH-BUTTON POST
4	EACH	3-SECTION SIGNAL HEAD
8	EACH	5-SECTION SIGNAL HEAD
1	EACH	SERVICE INSTALLATION
12	EACH	TRAFFIC SIGNAL BACKPLATE
2	EACH	EVP

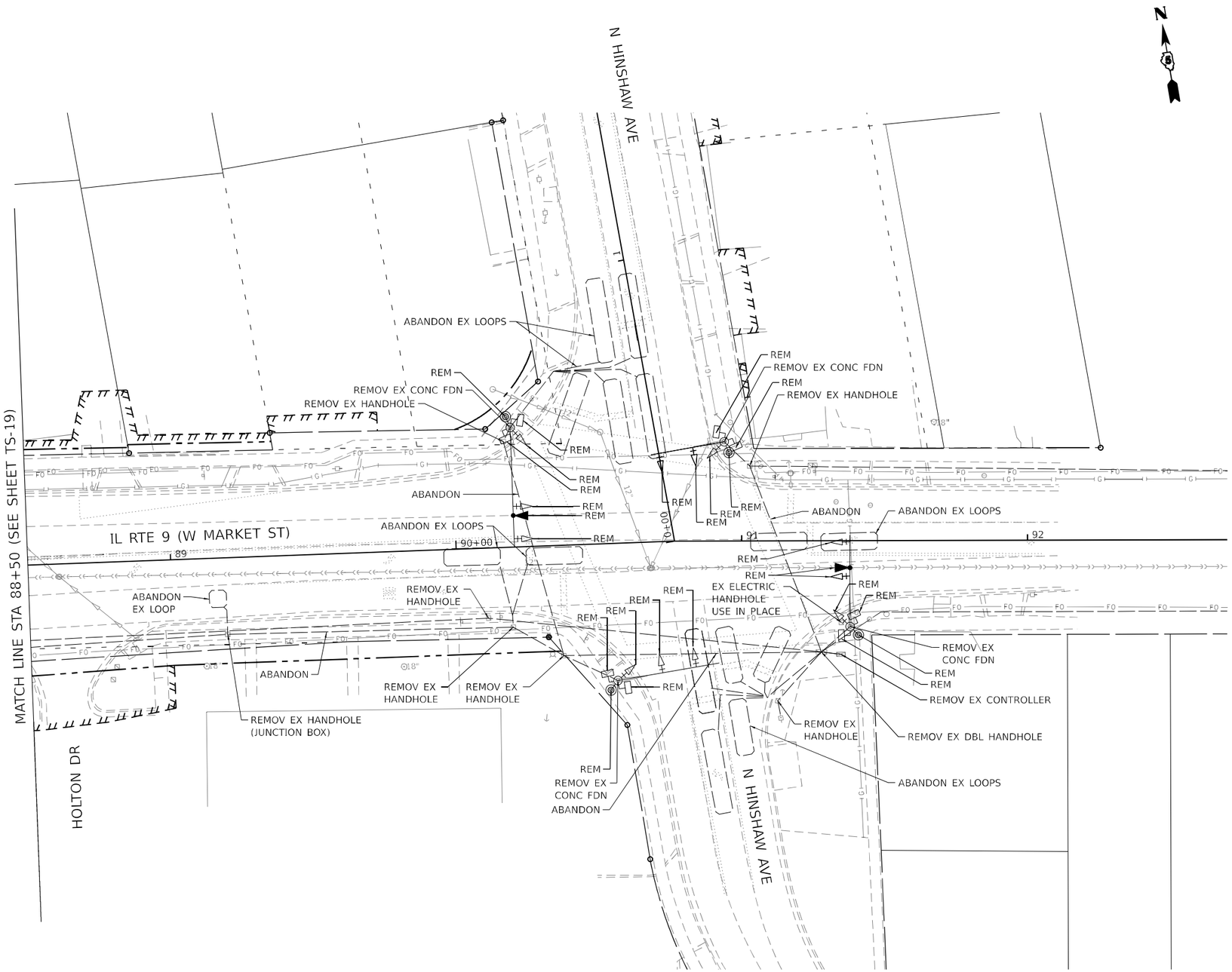

Kaskaskia Engineering Group, LLC
200 E. Main St., Suite 100, Belleville, Illinois 62220
618.233.5077 phone
618.233.5955 fax
www.kaskaskiaeng.com
PROFESSIONAL REGISTRATIONS
Illinois Professional Design Firm: 184.007773
Professional Engineering Group: 20.6000186

USER NAME = msecrest	DESIGNED - RJO	REVISED -	
	DRAWN - RJO	REVISED -	
PLOT SCALE = 40.0000 ' / in.	CHECKED - EJL	REVISED -	
PLOT DATE = 10/11/2023	DATE - 10-02-2023	REVISED -	

STATE OF ILLINOIS
DEPARTMENT OF TRANSPORTATION

EXISTING TRAFFIC SIGNAL EQUIPMENT REMOVAL
FAP 693 (IL RTE 9) - W. MARKET ST. & N. HINSHAW AVE.

SCALE: | SHEET 18 OF 26 SHEETS | STA. | TO STA.

F.A.P. RTE.	SECTION	COUNTY	TOTAL SHEETS	SHEET NO.
693	(129,109)RS3(16,4,1)	MCLEAN	218	127
		CONTRACT NO. 70855		
	ILLINOIS FED. AID PROJECT			

MODEL: Default
FILE NAME: pw:\\fileg-pw.bentley.com:fileg-pw-01\Documents\IDOT Projects\17-1137.00 GHD\0_IDOT\CAD Sheets\D5708S5-sht0118-TS Market Hinshaw Rem.dgn

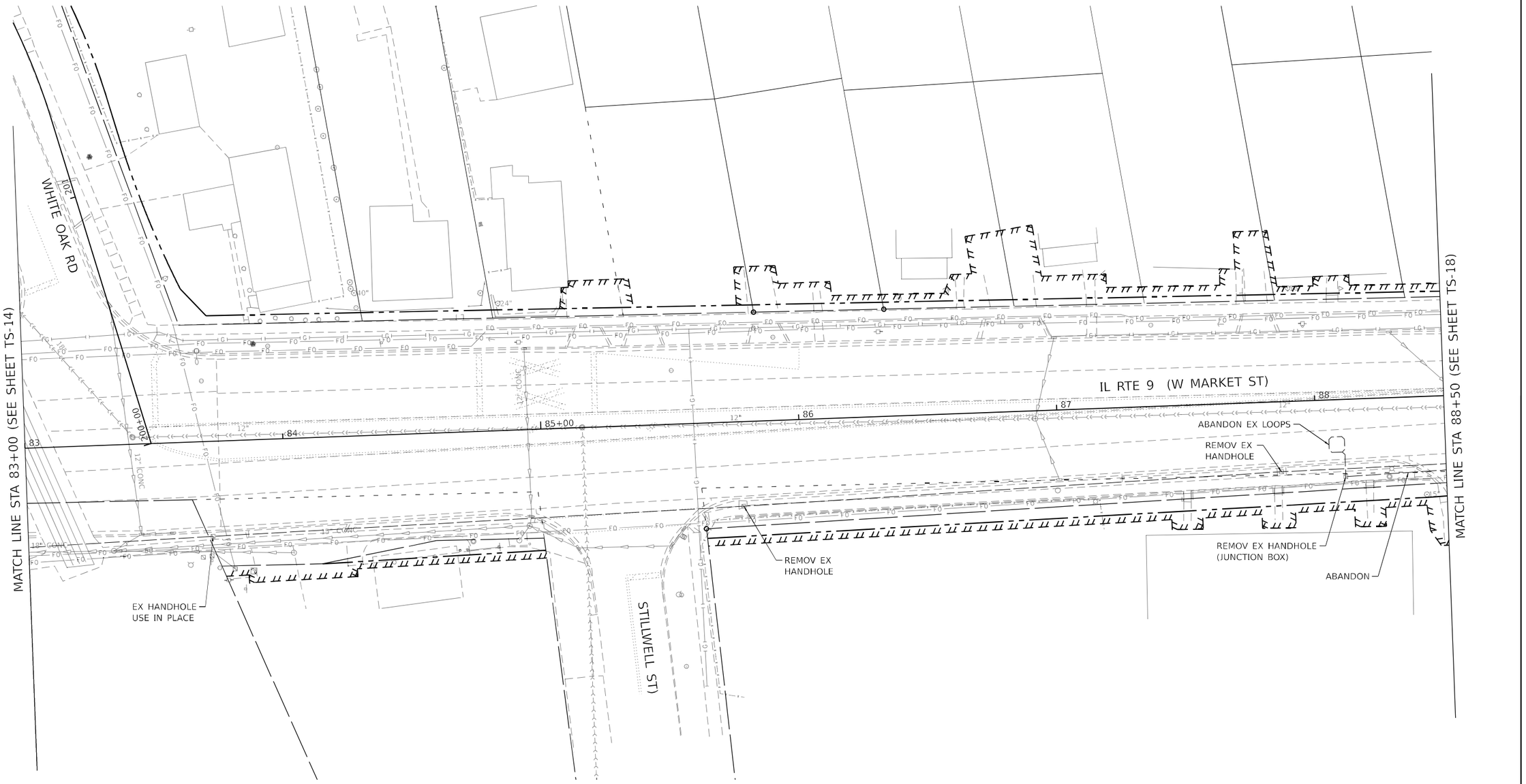

MODEL: Default
FILE NAME: pw://keg-pw.bentley.com:keg-pw-01/Documents/IDOT Projects/17-1137.00 ORD/0 IDOT/CAD_Sheets/D570855-sht019-TS_Market_Hinshaw_Rem.dgn

Kaskaskia Engineering Group, LLC
200 E. Main St., Suite 100
Belleville, Illinois 62220
618.233.5677 phone
618.233.5697 fax
www.kaskaskiaeng.com
PROFESSIONAL REGISTRATIONS
Illinois Professional Design Firm
Professional Engineering Group
LICENSE NO.
184.004773
20-5000186

USER NAME = msecrest	DESIGNED - RJO	REVISED -	
	DRAWN - RJO	REVISED -	
PLOT SCALE = 40.0000 ' / in.	CHECKED - EJL	REVISED -	
PLOT DATE = 10/11/2023	DATE - 10-02-2023	REVISED -	

STATE OF ILLINOIS
DEPARTMENT OF TRANSPORTATION

EXISTING TRAFFIC SIGNAL EQUIPMENT REMOVAL
FAP 693 (IL RTE 9) - W. MARKET ST. & N. HINSHAW AVE.

SCALE: | SHEET 19 OF 26 SHEETS | STA. | TO STA.

F.A.P. RTE.	SECTION	COUNTY	TOTAL SHEETS	SHEET NO.
693	(129,109)RS3(16,4,1)	MCLEAN	218	128
		CONTRACT NO. 70855		
		ILLINOIS	FED. AID PROJECT	

TRAFFIC SIGNAL PLAN LEGEND

ITEM	PROPOSED
MAST ARM ASSEMBLY AND POLE	
STEEL COMBINATION MAST ARM ASSEMBLY AND POLE WITH LUMINAIRE	
SIGNAL POST	
CONTROLLER CABINET	
SERVICE INSTALLATION (P) POLE OR (G) GROUND MOUNT	
SIGNAL HEAD	
SIGNAL HEAD WITH BACK PLATE	
PEDESTRIAN SIGNAL HEAD	
PEDESTRIAN PUSH-BUTTON -APS (ACCESSIBLE PEDESTRIAN PUSH-BUTTON)	APS
PRIORITY VEHICLE DETECTOR	
VIDEO DETECTOR SYSTEM	V
HANDHOLE	
DOUBLE HANDHOLE	
UNDERGROUND CONDUIT (UC)	
PROPOSED SIGN	

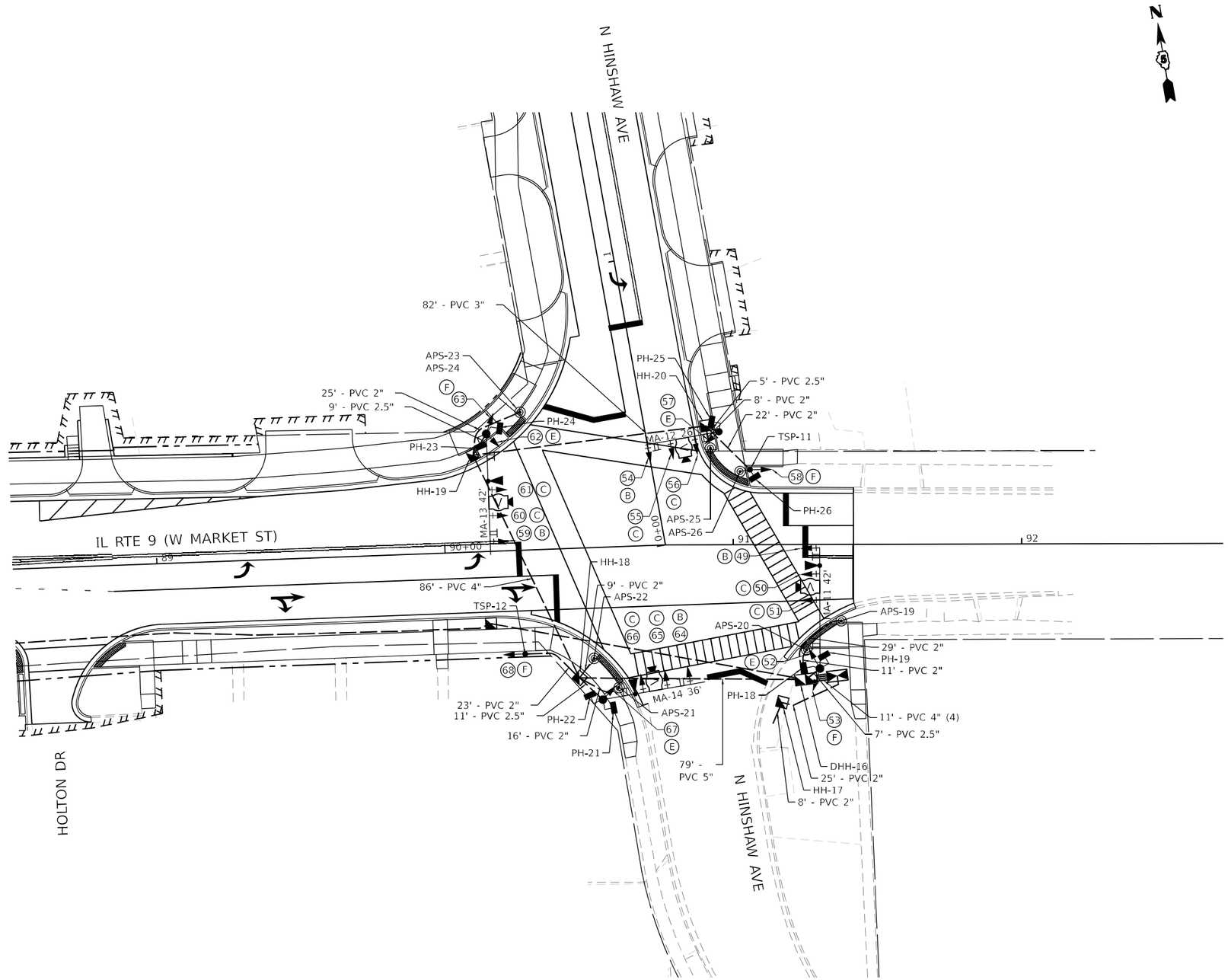

Kaskaskia Engineering Group, LLC	USER NAME = mserest	DESIGNED - RJO	REVISED -	**STATE OF ILLINOIS DEPARTMENT OF TRANSPORTATION**	**PROPOSED TRAFFIC SIGNALS FAP 693 (IL RTE 9) - W. MARKET ST. & N. HINSHAW AVE.**
		DRAWN - RJO	REVISED -		
	PLOT SCALE = 40.0000 ' / in.	CHECKED - EJL	REVISED -		SCALE: SHEET 20 OF 26 SHEETS STA. TO STA.
	PLOT DATE = 10/11/2023	DATE - 10-02-2023	REVISED -		

F.A.P. RTE.	SECTION	COUNTY	TOTAL SHEETS	SHEET NO.
693	(129,109)RS3(16,4,1)	MCLEAN	218	129
		CONTRACT NO. 70855		
	ILLINOIS FED. AID PROJECT			

MODEL: Default
FILE NAME: pw:\\keg-pw.bentley.com:keg-pw01\Documents\IDOT Projects\17-1137.00 ORD\0 IDOT\CAD Sheets\D5709855-sht020-TS Market Hinshaw.dgn

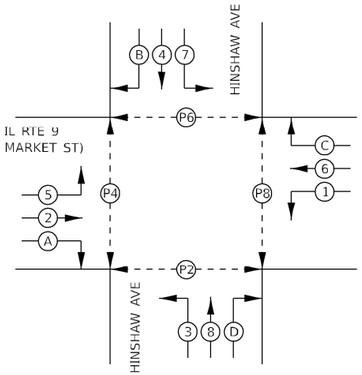

PHASE DESIGNATION DIAGRAM

(2) — VEHICULAR MOVEMENT

(P2) — PEDESTRIAN MOVEMENT

NUMBER REFERS TO ASSOCIATED PHASE

CABLE DIAGRAM LEGEND

———	ELECTRIC CABLE IN CONDUIT
5/C	NUMBER OF CONDUCTORS IN CABLE
■	PROPOSED SERVICE INSTALLATION
NO. 6	AMERICAN WIRE GAUGE (AWG) SIZE 6 CONDUCTORS (SEE GENERAL NOTES)
APS	PEDESTRIAN PUSH BUTTON -(APS) ACCESSIBLE PEDESTRIAN PUSH-BUTTON
	PEDESTRIAN SIGNAL HEAD WITH COUNTDOWN DISPLAY
	EMERGENGY VEHICLE PREEMPTION DETECTOR AND BEACON
V	PROPOSED TRAFFIC SIGNAL VIDEO DETECTOR SYSTEM
	GROUND ROD AT (C) CONTROLLER, (H) HANDHOLE, (P) POST, (M) MAST ARM. OR (S) SERVICE

IL RTE 9 (W MARKET ST)

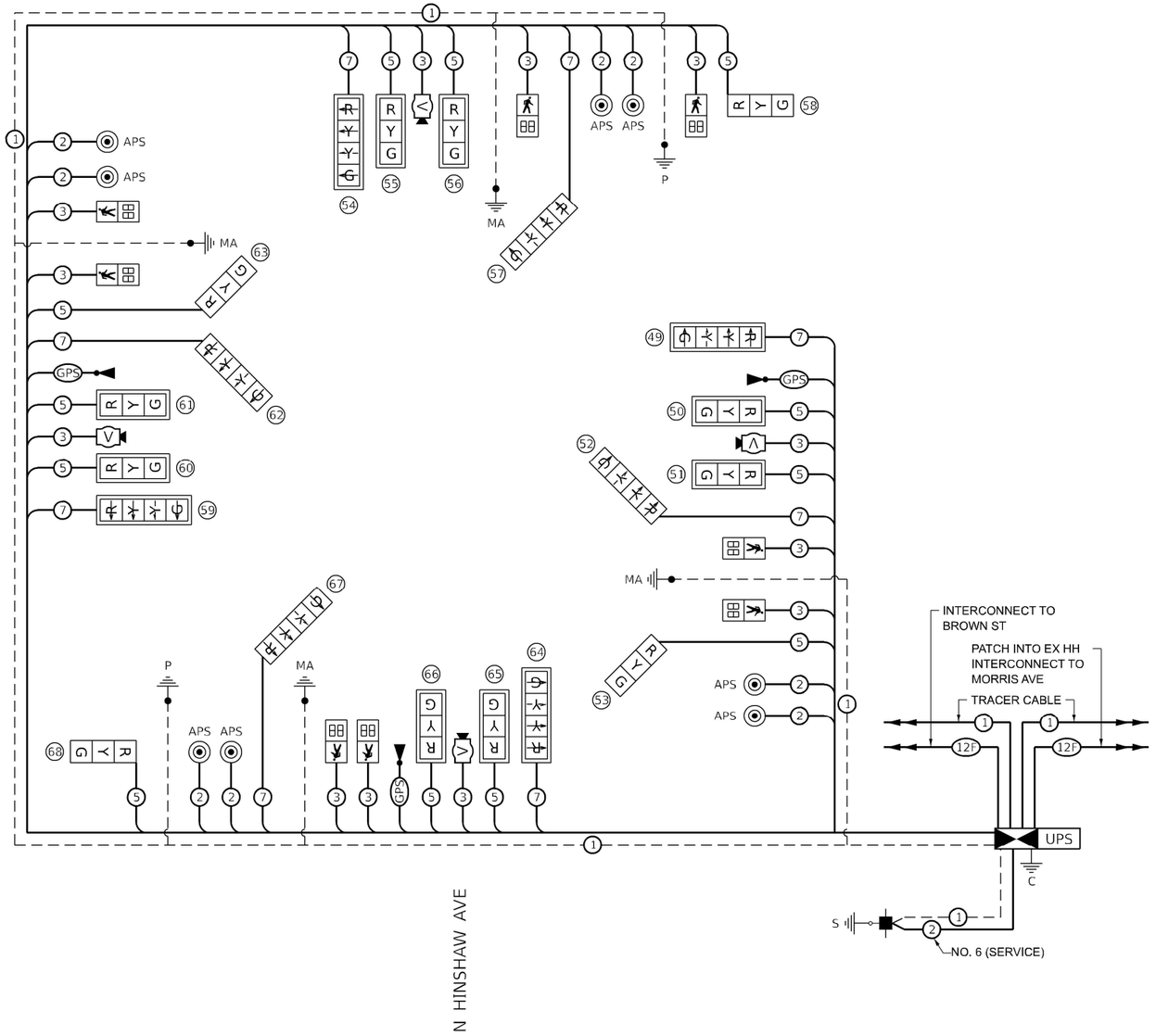

MODEL: Default
FILE NAME: pw://kag-pw.bentley.com:kag-pw-01/Jobs/Illinois/dIDOT Projects/17-1137.00 DRD/0 ID07/CAD Sheet/d557085S-sht021-TS Market -Hinshaw Cable.dgn

Kaskaskia Engineering Group, LLC
PROFESSIONAL REGISTRATIONS
Illinois Professional Design Firm: 184.005773
Professional Engineering Group: 20-5000345
LICENSE NO.
200 E. Main St., Suite 100
Red Bud, Illinois 62278
618.559.3077 Phone
www.kaskaskiaeng.com

USER NAME = msecrest	DESIGNED - RJO	REVISED -	
	DRAWN - RJO	REVISED -	
PLOT SCALE = 40.0000 ' / in.	CHECKED - EJL	REVISED -	
PLOT DATE = 10/11/2023	DATE - 10-02-2023	REVISED -	

STATE OF ILLINOIS
DEPARTMENT OF TRANSPORTATION

TRAFFIC SIGNAL CABLE DIAGRAM
FAP 693 (IL RTE 9) - W. MARKET ST. & N. HINSHAW AVE.

SCALE: | SHEET 21 OF 26 SHEETS | STA. | TO STA.

F.A.P. RTE.	SECTION	COUNTY	TOTAL SHEETS	SHEET NO.
693	(129,109)RS3(16,4,1)	MCLEAN	218	130
		CONTRACT NO. 70855		
		ILLINOIS	FED. AID PROJECT	

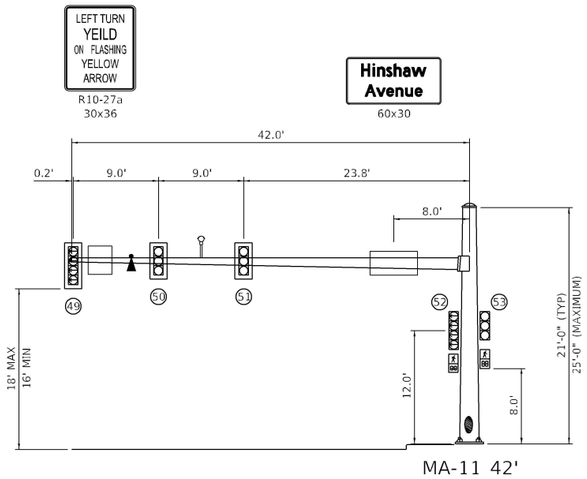

MA-11 42'

EASTBOUND TRAFFIC SIGNAL
IL RTE 9 (MARKET ST) & HINSHAW AVE

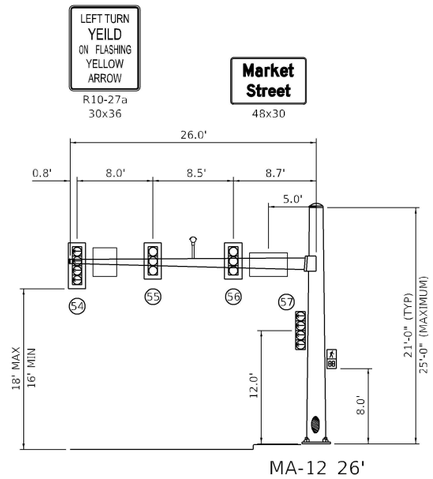

MA-12 26'

NORTHBOUND TRAFFIC SIGNAL
IL RTE 9 (MARKET ST) & HINSHAW AVE

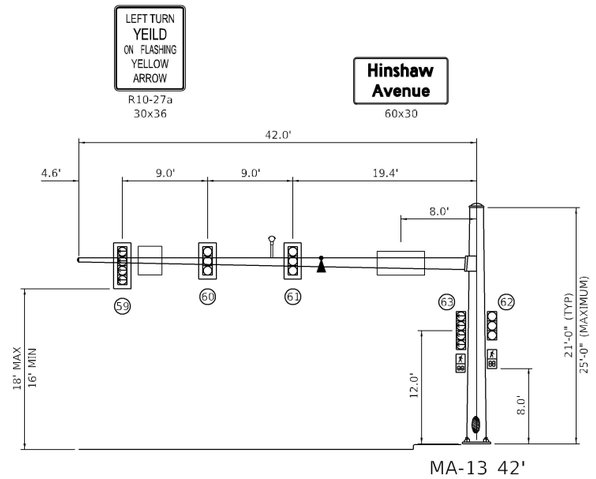

MA-13 42'

WESTBOUND TRAFFIC SIGNAL
IL RTE 9 (MARKET ST) & HINSHAW AVE

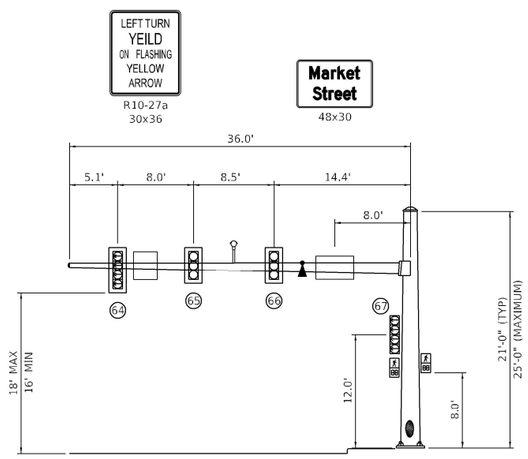

MA-14 36'

EASTBOUND TRAFFIC SIGNAL
IL RTE 9 (MARKET ST) & HINSHAW AVE

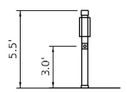

APS-19
SOUTHEAST QUAD

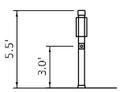

APS-20
SOUTHEAST QUAD

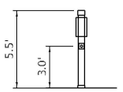

APS-21
SOUTHWEST QUAD

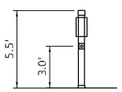

APS-22
SOUTHWEST QUAD

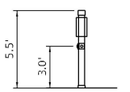

APS-23 & APS-24
NORTHWEST QUAD

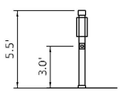

APS-25
NORTHEAST QUAD

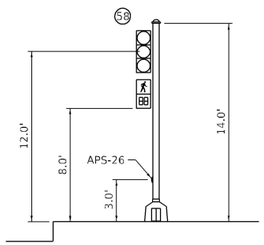

TSP-11
NORTHEAST QUAD

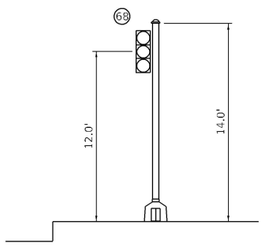

TSP-12
SOUTHWEST QUAD

MODEL: Default
FILE NAME: pw://kaspw.bentley.com:kaspw-pw01/Documents/IDOT Projects\17-1137.00 QRD\0 IDOT\CAD Sheets\D5700855-sht022-TS Market -Hinshaw Details.dgn

Kaskaskia Engineering Group, LLC
Illinois Professional Design Firm
Professional Engineering Group
200 E. Main St., Suite 300
Belleville, Illinois 62220
618.233.5077 phone
618.233.5075 fax
www.KaskaskiaEng.com
184.007973
20.5800350

USER NAME = msecrest	DESIGNED - RJO	REVISED -	
	DRAWN - RJO	REVISED -	
PLOT SCALE = 16.0000 ' / in.	CHECKED - EJL	REVISED -	
PLOT DATE = 10/11/2023	DATE - 10-02-2023	REVISED -	

STATE OF ILLINOIS
DEPARTMENT OF TRANSPORTATION

TRAFFIC SIGNAL DETAILS
FAP 693 (IL RTE 9) - W. MARKET ST. & N. HINSHAW AVE.

SCALE: NTS | SHEET 22 OF 26 SHEETS | STA. | TO STA.

F.A.P. RTE.	SECTION	COUNTY	TOTAL SHEETS	SHEET NO.
693	(129,109)RS3(16,4,1)	MCLEAN	218	131
		CONTRACT NO. 70855		
		ILLINOIS	FED. AID PROJECT	

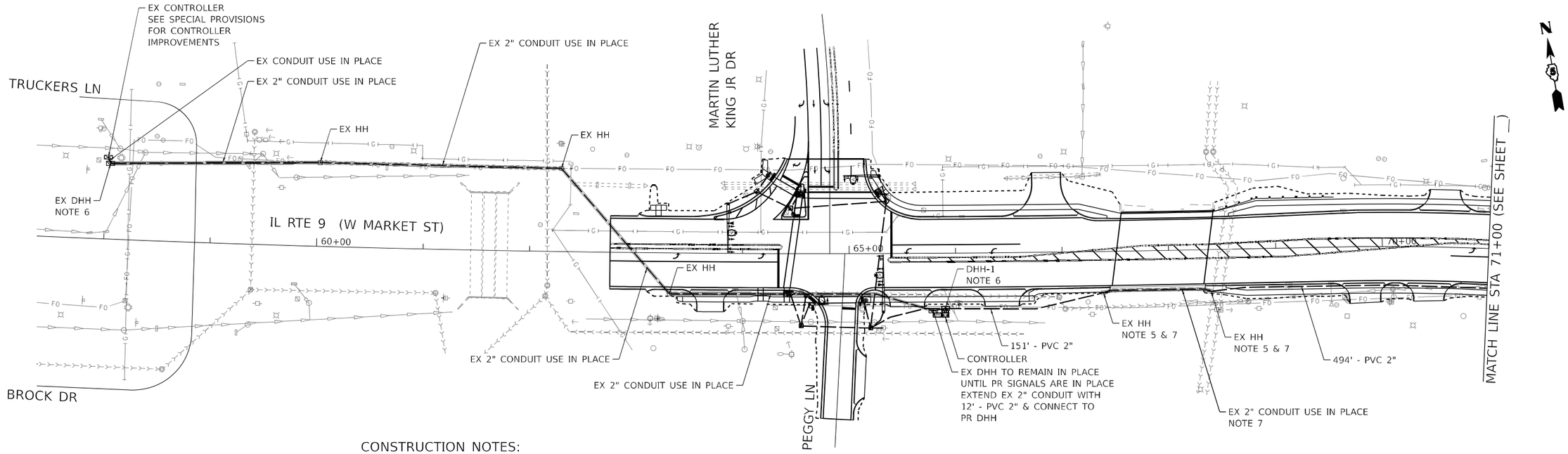

CONSTRUCTION NOTES:

1. INSTALL HANDHOLE. PROSED CONDUIT SHALL BE CONNECTED TO THE PROPOSED HANDHOLE AS INCIDENTAL TO THIS ITEM.
2. THE CONTRACTOR SHALL INSTALL THE PROPOSED CONDUIT SO THAT DAMAGE TO THE TREES AND SHRUBS WILL BE MINIMIZED, REPLACE THE DAMAGED SHRUBS WITH SIMILAR PLANTINGS, AND REPLACE DISTURBED LANDSCAPING MATERIAL WITH SIMILAR MATERIAL.
3. INTERCONNECT CABLE AND CONDUIT QUANTITIES ARE CALCULATED BETWEEN TRAFFIC SIGNAL CONTROLLER CABINETS AT THE INTERSECTIONS NOTED. CONTROLLER AND CONTROLLER CABINET ARE SHOWN ON THE PLAN SHEET FOR EACH INTERSECTION.
4. PROPOSED CABLES SHALL BE NEATLY WOUND ON HOOKS IN EACH HANDHOLE. THIS WILL BE CONSIDERED INCIDENTAL TO THE COST OF EACH CABLE.
5. DRILL EXISTING HANDHOLE OR DOUBLE HANDHOLE.
6. LEAVE 40' SLACK OF INTERCONNECT CABLE IN DOUBLE HANDHOLE.
7. USE EXISTING DOUBLE HANDHOLES, HANDHOLES, AND CONDUIT AT THE EXISTING BRIDGE AND UNDER RAILROAD.

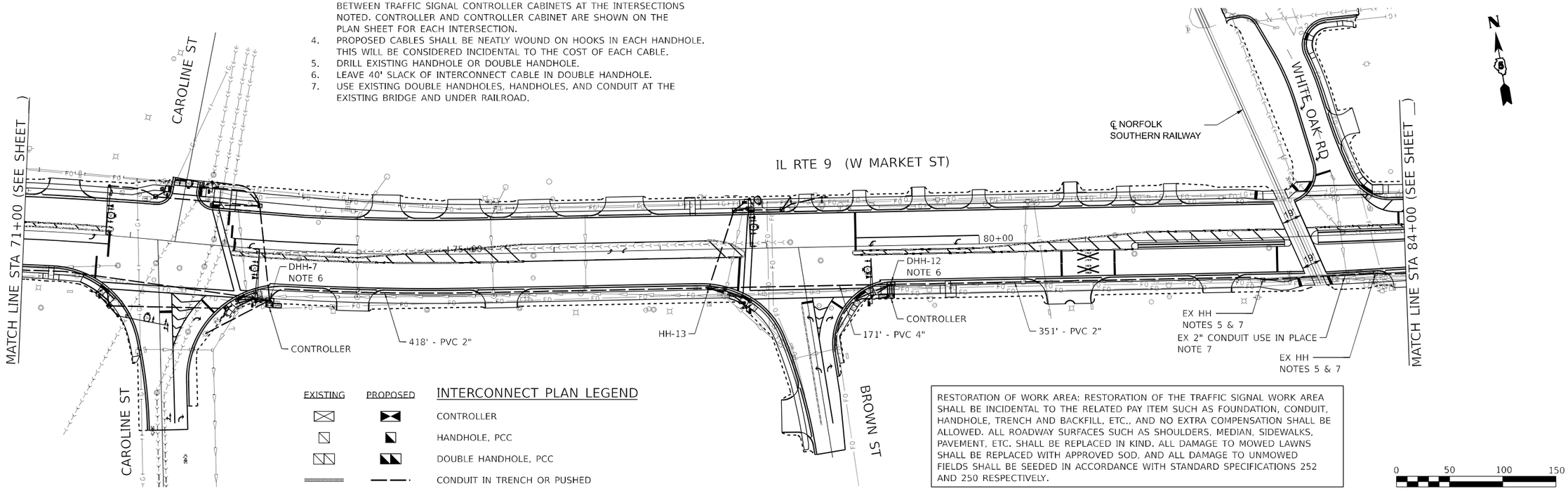

EXISTING PROPOSED

INTERCONNECT PLAN LEGEND

- CONTROLLER
- HANDHOLE, PCC
- DOUBLE HANDHOLE, PCC
- CONDUIT IN TRENCH OR PUSHED

RESTORATION OF WORK AREA: RESTORATION OF THE TRAFFIC SIGNAL WORK AREA SHALL BE INCIDENTAL TO THE RELATED PAY ITEM SUCH AS FOUNDATION, CONDUIT, HANDHOLE, TRENCH AND BACKFILL, ETC., AND NO EXTRA COMPENSATION SHALL BE ALLOWED. ALL ROADWAY SURFACES SUCH AS SHOULDERS, MEDIAN, SIDEWALKS, PAVEMENT, ETC. SHALL BE REPLACED IN KIND. ALL DAMAGE TO MOWED LAWNS SHALL BE REPLACED WITH APPROVED SOD, AND ALL DAMAGE TO UNMOWED FIELDS SHALL BE SEEDED IN ACCORDANCE WITH STANDARD SPECIFICATIONS 252 AND 250 RESPECTIVELY.

0 50 100 150
SCALE IN FEET

MODEL: Default
FILE NAME: V:\4216 - IL 9 Bloomington\Subconsultant Coordination\From Kaskaskia\Final file\0057085-int008-TS_Market_MLK_CAD\057085-int023-TS Interconnect.dgn

Kaskaskia Engineering Group, LLC
Professional Engineering Services
Illinois Professional Design Firm: 184.007773
Professional Engineering Group: 20.6000186
200 E. Main St., Suite 100
Belleville, Illinois 62220
618.233.5077 phone
618.233.5955 fax
www.kaskaskiaeng.com

USER NAME = BDeCraene	DESIGNED - MMS	REVISED - 11/16/2023	
	DRAWN - MMS	REVISED -	
PLOT SCALE = 100.000 ' / in.	CHECKED - EJL	REVISED -	
PLOT DATE = 11/17/2023	DATE - 10-02-2023	REVISED -	

STATE OF ILLINOIS
DEPARTMENT OF TRANSPORTATION

PROPOSED INTERCONNECT PLAN
FAP 693 (IL RTE 9) - W. MARKET ST. (TRUCKERS LN. TO HINSHAW AVE.)

SCALE: 1"= 50' | SHEET 23 OF 26 SHEETS | STA. | TO STA.

F.A.P. RTE.	SECTION	COUNTY	TOTAL SHEETS	SHEET NO.
693	(129,109)RS3(16,4,1)	MCLEAN	218	132
		CONTRACT NO. 70855		
	ILLINOIS	FED. AID PROJECT		

INTERCONNECT PLAN LEGEND

EXISTING	PROPOSED	
⊠	⊠	CONTROLLER
▯	◪	HANDHOLE, PCC
▯▯	◪◪	DOUBLE HANDHOLE, PCC
═══	— — —	CONDUIT IN TRENCH OR PUSHED

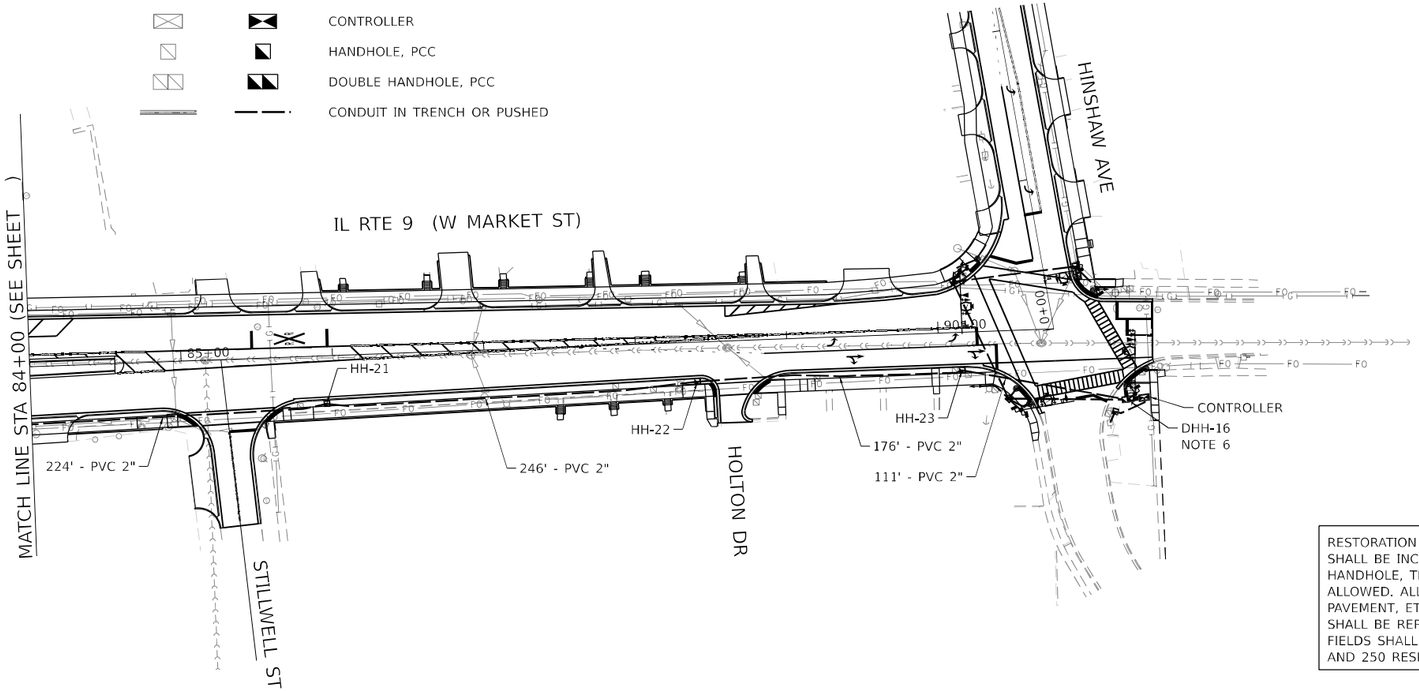

CONSTRUCTION NOTES:

1. INSTALL HANDHOLE. PROSED CONDUIT SHALL BE CONNECTED TO THE PROPOSED HANDHOLE AS INCIDENTAL TO THIS ITEM.
2. THE CONTRACTOR SHALL INSTALL THE PROPOSED CONDUIT SO THAT DAMAGE TO THE TREES AND SHRUBS WILL BE MINIMIZED, REPLACE THE DAMAGED SHRUBS WITH SIMILAR PLANTINGS, AND REPLACE DISTURBED LANDSCAPING MATERIAL WITH SIMILAR MATERIAL.
3. INTERCONNECT CABLE AND CONDUIT QUANTITIES ARE CALCULATED BETWEEN TRAFFIC SIGNAL CONTROLLER CABINETS AT THE INTERSECTIONS NOTED. CONTROLLER AND CONTROLLER CABINET ARE SHOWN ON THE PLAN SHEET FOR EACH INTERSECTION.
4. PROPOSED CABLES SHALL BE NEATLY WOUND ON HOOKS IN EACH HANDHOLE. THIS WILL BE CONSIDERED INCIDENTAL TO THE COST OF EACH CABLE.
5. DRILL EXISTING HANDHOLE OR DOUBLE HANDHOLE.
6. LEAVE 40' SLACK OF INTERCONNECT CABLE IN DOUBLE HANDHOLE.
7. USE EXISTING DOUBLE HANDHOLES, HANDHOLES, AND CONDUIT AT THE EXISTING BRIDGE AND UNDER RAILROAD.

RESTORATION OF WORK AREA: RESTORATION OF THE TRAFFIC SIGNAL WORK AREA SHALL BE INCIDENTAL TO THE RELATED PAY ITEM SUCH AS FOUNDATION, CONDUIT, HANDHOLE, TRENCH AND BACKFILL, ETC., AND NO EXTRA COMPENSATION SHALL BE ALLOWED. ALL ROADWAY SURFACES SUCH AS SHOULDERS, MEDIAN, SIDEWALKS, PAVEMENT, ETC. SHALL BE REPLACED IN KIND. ALL DAMAGE TO MOWED LAWNS SHALL BE REPLACED WITH APPROVED SOD, AND ALL DAMAGE TO UNMOWED FIELDS SHALL BE SEEDED IN ACCORDANCE WITH STANDARD SPECIFICATIONS 252 AND 250 RESPECTIVELY.

0 50 100 150
SCALE IN FEET

SCHEDULE OF QUANTITIES

CODE NO.	ITEM DESCRIPTION	ABBREVIATED ITEM NAME	UNIT	QUANTITY	TOTAL USED	NOTES
81028350	UNDERGROUND CONDUIT, PVC, 2" DIA.	UNDRGRD C PVC 2	FOOT	2,183		USE EX CONDUIT TRUCKERS LN- MLK, BRIDGE, & RR
81400100	HANDHOLE	HANDHOLE	EACH	3	11	7 EX HH & 1 PR HH SEE SIGNAL PLAN
81400300	DOUBLE HANDHOLE	DBL HANDHOLE	EACH		5	1 EX DHH & 4 PR HH SEE SIGNAL PLAN
87300925	ELECTRIC CABLE IN CONDUIT, TRACER, NO. 14 1C	ELCBL C TRACER 14 1C	FOOT	3,856		
87900200	DRILL EXISTING HANDHOLE	DRILL EX HANDHOLE	EACH	4		
X1400006	FIBER OPTIC CABLE IN CONDUIT, 12 FIBERS, SINGLE MODE	FO CAB C 12F SM	FOOT	3,856		

SCHEDULE OF HANDHOLE QUANTITIES

REF.	LOCATION	TYPE	STATION	OFFSET	NOTES
MARKET ST INTERCONNECT (TRUCKERS LN TO HINSHAW AVE)					
EX DHH	NORTHWEST QUADRANT	EX DBL HANDHOLE	58+03.7	71.2' LT	USE IN PLACE
EX HH	NORTHEAST QUADRANT	EX HANDHOLE	60+01.2	78.7' LT	USE IN PLACE
EX HH	NORTH SIDE	EX HANDHOLE	62+28.9	78.1' LT	USE IN PLACE
EX HH	SOUTH SIDE	EX HANDHOLE	63+31.6	38.4' RT	USE IN PLACE
EX DHH	SOUTHEAST QUADRANT	EX DBL HANDHOLE	65+78.7	53.9' RT	TO BE REMOVED
DHH-1	SOUTHEAST QUADRANT	DBL HANDHOLE PCC	65+90.0	52.00' RT	SEE SIGNAL PLAN
EX HH	SOUTH SIDE	EX HANDHOLE	67+38.3	38.7' RT	USE IN PLACE
EX HH	SOUTH SIDE	EX HANDHOLE	68+39.0	39.1' RT	USE IN PLACE
DHH-7	SOUTHEAST QUADRANT	DBL HANDHOLE PCC	73+35.0	47.66' RT	SEE SIGNAL PLAN
HH-13	SOUTHWEST QUADRANT	HANDHOLE PCC	77+45.0	36.39' RT	SEE SIGNAL PLAN
DHH-12	SOUTHEAST QUADRANT	DBL HANDHOLE PCC	79+16.0	36.33' RT	SEE SIGNAL PLAN
EX HH	SOUTH SIDE	EX HANDHOLE	82+65.4	39.3' RT	USE IN PLACE
EX HH	SOUTH SIDE	EX HANDHOLE	83+71.6	36.8' RT	USE IN PLACE
HH-21	SOUTH SIDE	HANDHOLE PCC	85+95.0	31.7' RT	
HH-22	SOUTH SIDE	HANDHOLE PCC	88+40.0	26.0' RT	
HH-23	SOUTHWEST QUADRANT	HANDHOLE PCC	90+15.0	25.0' RT	
DHH-16	SOUTHEAST QUADRANT	DBL HANDHOLE PCC	91+25.08	46.80' RT	SEE SIGNAL PLAN

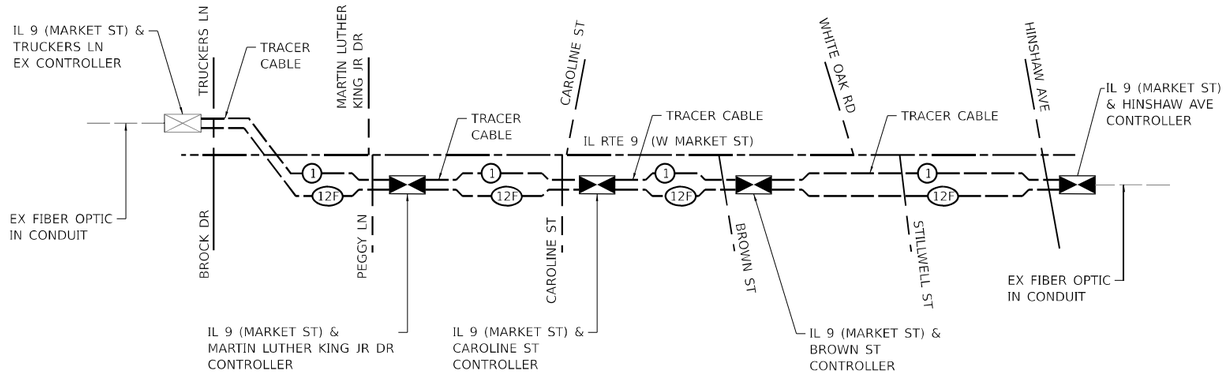

INTERCONNECT SCHEMATIC

Kaskaskia Engineering Group, LLC
700 E. Main St., Suite 100, Belleville, Illinois 62220
618.233.1077 phone
618.233.1033 fax
www.kaskaskiaengineering.com
ILLINOIS REGISTERED CORPORATION
Illinois Professional Design Firm: 184.007773
Professional Engineering Group: 20.1000180
LICENSE NO.

USER NAME = msecrest	DESIGNED - RJO	REVISED -	
	DRAWN - RJO	REVISED -	
PLOT SCALE = 100.000 ' / in.	CHECKED - EJL	REVISED -	
PLOT DATE = 10/11/2023	DATE - 10-02-2023	REVISED -	

STATE OF ILLINOIS
DEPARTMENT OF TRANSPORTATION

PROPOSED INTERCONNECT PLAN
FAP 693 (IL RTE 9) - W. MARKET ST. (TRUCKERS LN. TO HINSHAW AVE.)

SCALE: 1"= 50' | SHEET 24 OF 26 SHEETS | STA. | TO STA.

F.A.P. RTE.	SECTION	COUNTY	TOTAL SHEETS	SHEET NO.
693	(129,109)RS3(16,4,1)	MCLEAN	218	133
		CONTRACT NO. 70855		
	ILLINOIS	FED. AID PROJECT		

MODEL: Default
FILE NAME: p:\projects\bentley.cs\mkegs-pw-01\Documents\IDOT Projects\17-1137.00 04B10_IDOT\CAD Sheets\d0570885s-sht024-TS Intercon-sect.dgn

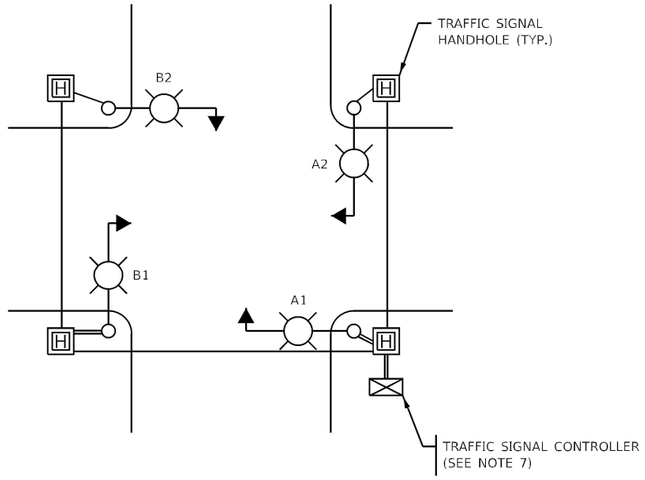

TYPICAL LIGHTING CIRCUIT

(NOT TO SCALE)

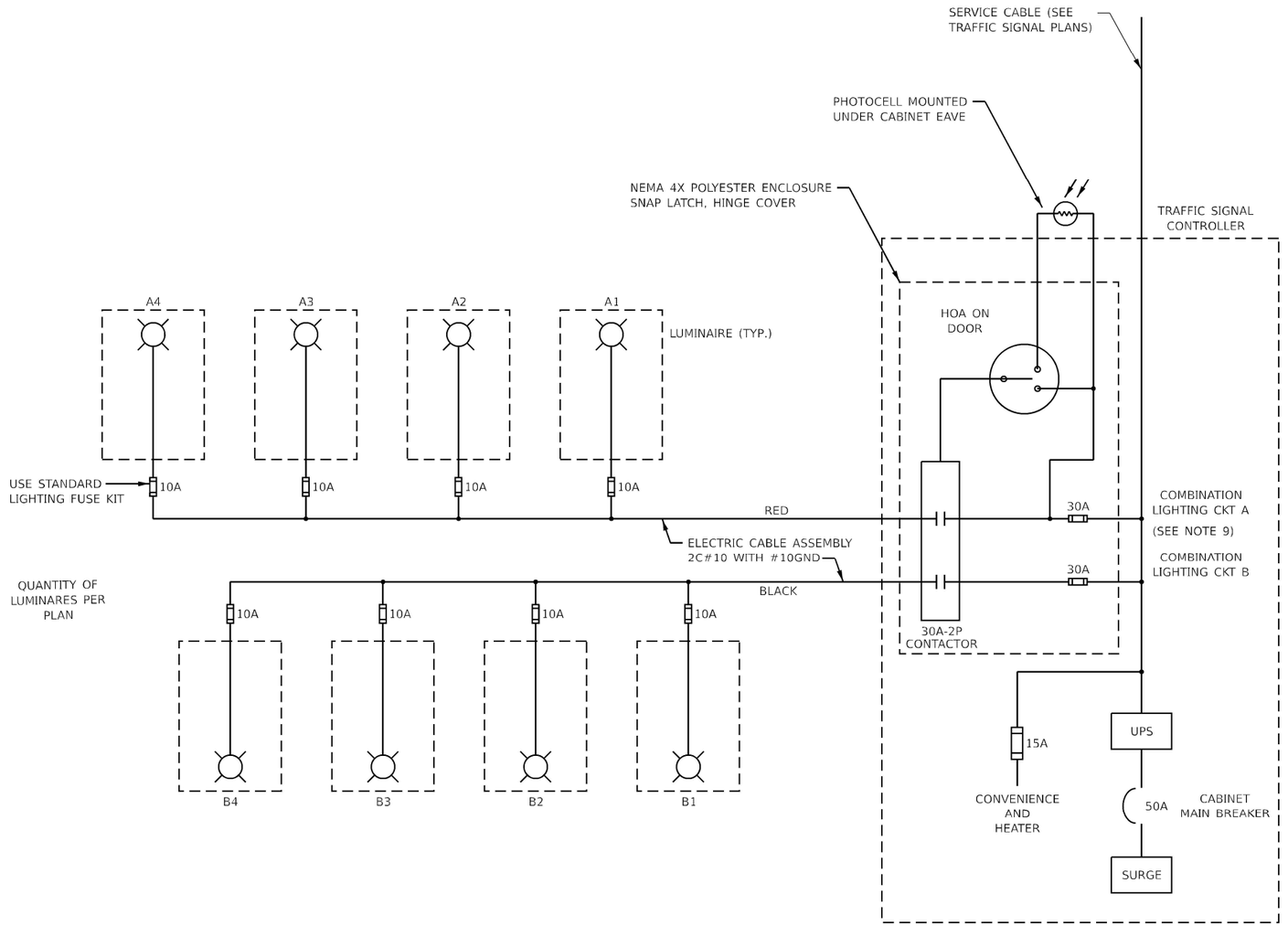

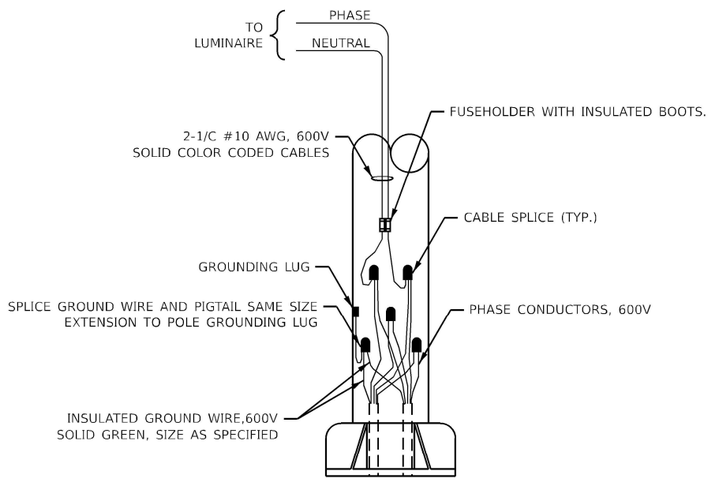

COMBINATION POLE WIRING DETAIL

(NOT TO SCALE)

NOTES:

1. 4 LUMINAIRES PER CIRCUIT, MAXIMUM.
2. MULTI-CONDUCTOR CABLE ASSEMBLY FOR LIGHTING CIRCUITS.
3. ROUTE LIGHTING CIRCUITS IN TRAFFIC SIGNAL CONDUIT SYSTEM.
4. ALL SPLICES AND CONNECTIONS FOR ROADWAY LIGHTING SHALL BE AT POLE BASE ONLY.
5. ALL CONTROLLERS TO HAVE TWO FUSED LIGHTING BRANCH CIRCUITS.
6. ALL WIRING SHALL BE NEATLY DRESSED, IDENTIFIED BY TAGS, AND SUPPORTED. (UNDERGROUND SPLICING OF LIGHTING CONDUCTORS IS NOT PERMITTED.
7. RECORD DRAWING SHALL INCLUDE:
   - TRAFFIC SIGNAL PLAN SHEET(S)
   - TRAFFIC SIGNAL CABLE PLAN SHEET(S)
   - LIGHTING PLANS
   - THIS DETAIL
8. THE H.O.A. SWITCH SHALL BE LABELED AS "LIGHTING CONTROL" WITH THE POSITIONS "AUTO", "OFF" AND "TEST" WITH ENGRAVED NAME PLATES.
9. LIGHTING CONNECTED TO UPS BYPASS CIRCUIT.

MODEL: Default
FILE NAME: pw://keg-pw.bentley.com:keg-pw-01/Documents/IDOT Projects/17-1137.00 ORD/0 IDOT/CAD Sheets/D570855-sht025-TS Lighting.dgn

Kaskaskia Engineering Group, LLC
PROFESSIONAL ENGINEERING LICENSE NO.
Illinois Professional Design Firm 184.004773
Professional Engineering Group 20-5080185

USER NAME = msecrest	DESIGNED - RJO	REVISED -	
	DRAWN - RJO	REVISED -	
PLOT SCALE = 2.000 ' / in.	CHECKED - EJL	REVISED -	
PLOT DATE = 10/11/2023	DATE - 10-02-2023	REVISED -	

STATE OF ILLINOIS
DEPARTMENT OF TRANSPORTATION

COMBINATION LIGHTING, TRAFFIC SIGNAL SCHEMATIC

SCALE: NTS | SHEET 25 OF 26 SHEETS | STA. TO STA.

F.A.P. RTE.	SECTION	COUNTY	TOTAL SHEETS	SHEET NO.
693	(129,109)RS3(16,4,1)	MCLEAN	218	134

CONTRACT NO. 70855

ILLINOIS | FED. AID PROJECT

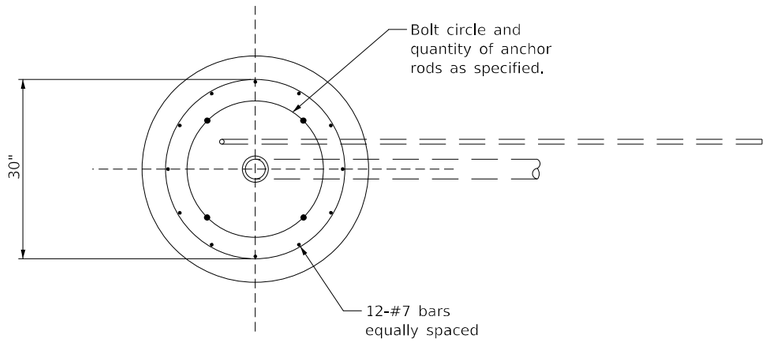

TOP VIEW

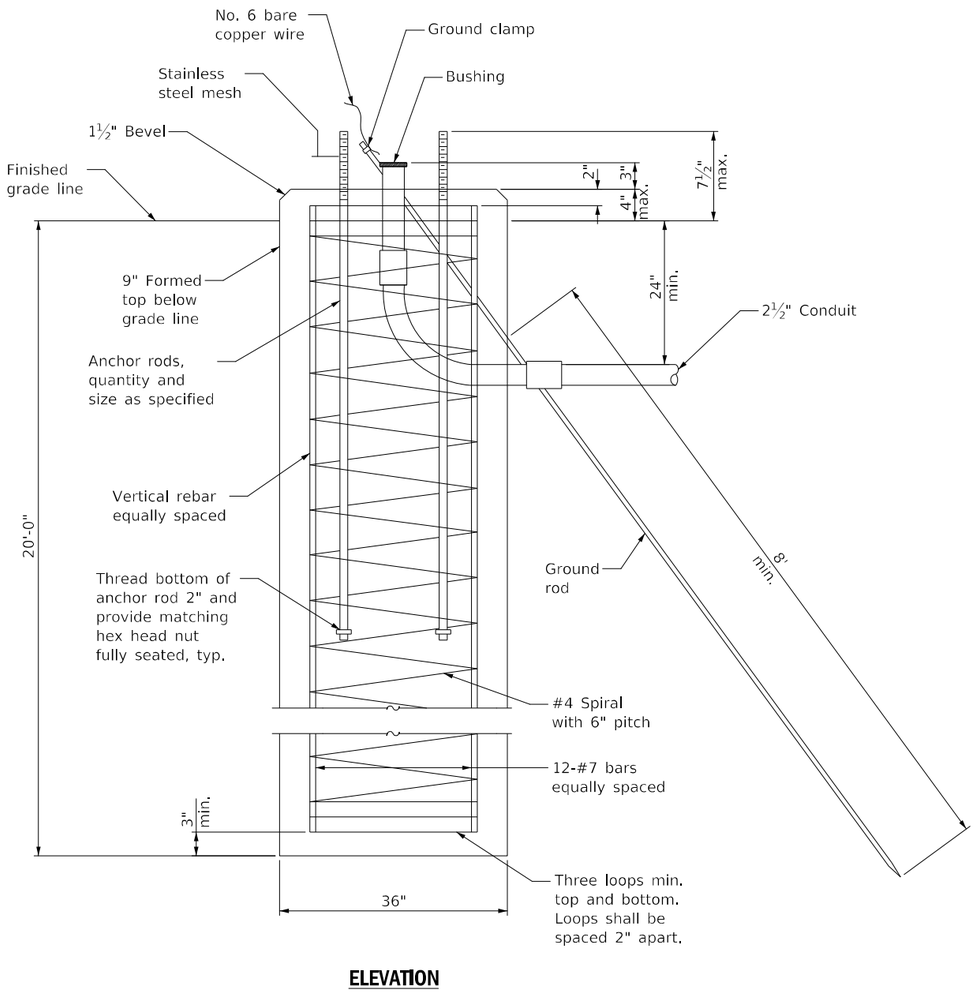

ELEVATION

DESIGN STRESSES

(FIELD UNITS)
f'c = 3,500 p.s.i.
fy = 60,000 p.s.i. (Rein.)

MODEL: $MODELNAME$
FILE NAME: V:\4216 - IL 9 Resurfacing (IDOT)\CADD\Foundation Details\D570855-drt-Founcation_Detail01.dgn

Hutchison Engineering, Inc.

USER NAME = BBorgman	DESIGNED -	REVISED -
	DRAWN -	REVISED -
PLOT SCALE = 8.0000 ' / in.	CHECKED -	REVISED -
PLOT DATE = 9/26/2023	DATE -	REVISED -

STATE OF ILLINOIS
DEPARTMENT OF TRANSPORTATION

MA–5, MA–7, MA–9, MA–10, & MA–11
CONCRETE FOUNDATION DETAILS

SCALE: | SHEET 26 OF 26 SHEETS | STA. | TO STA.

F.A.P. RTE.	SECTION	COUNTY	TOTAL SHEETS	SHEET NO.
693	(129,109)RS3(16,4,1)	MCLEAN	218	135
		CONTRACT NO. 70855		
	ILLINOIS	FED. AID PROJECT		

Existing Structure: SN 057-0190 was built in 1980 as FA Rte. 693, Section 129 B-1 at Sta. 67+94. The superstructure was removed and replaced in 2007. The structure is a three-span PPC deck beam bridge supported on pile bent abutments and piers. The bridge measures 89'-4½" back to back abutments and 75'-0" out to out, with a 8°00'00" left forward skew. Stage construction will be utilized to maintain at least one lane of traffic in each direction.

INDEX OF SHEETS

1. General Plan and Elevation
2-3. Stage Construction Details
4. Wearing Surface Repair Plan
5-6. Wearing Surface Repair Details
7. Superstructure Details
8-9. Sidewalk Details
10. Aluminum Railing, Type L
11. Bar Splicer Assembly Details

TOTAL BILL OF MATERIAL

ITEM	UNIT	SUPER	SUB	TOTAL
Hot-Mix Asphalt Surface Removal, 5"	Sq. Yd.	17	-	17
Concrete Removal	Cu. Yd.	7.0	-	7.0
Floor Drains	Each	3	-	3
Concrete Superstructure	Cu. Yd.	42.2	-	42.2
Bridge Deck Grooving	Sq. Yd.	122	-	122
Protective Coat	Sq. Yd.	218	-	218
Reinforcement Bars, Epoxy Coated	Pound	4,940	-	4,940
Bar Splicers	Each	53	-	53
Mechanical Splicers	Each	253	-	253
Aluminum Railing, Type L	Foot	75	-	75
Concrete Wearing Surface Removal	Sq. Yd.	187	-	187
Concrete Wearing Surface, 5"	Sq. Yd.	124	-	124

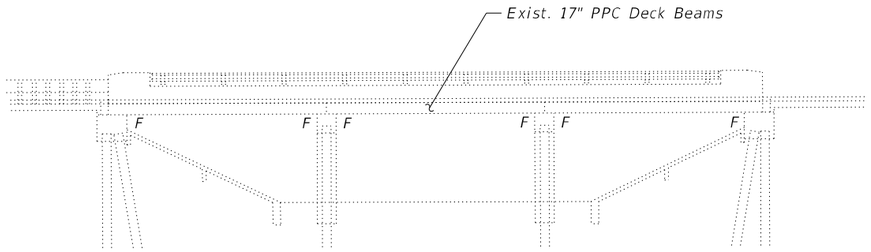

ELEVATION

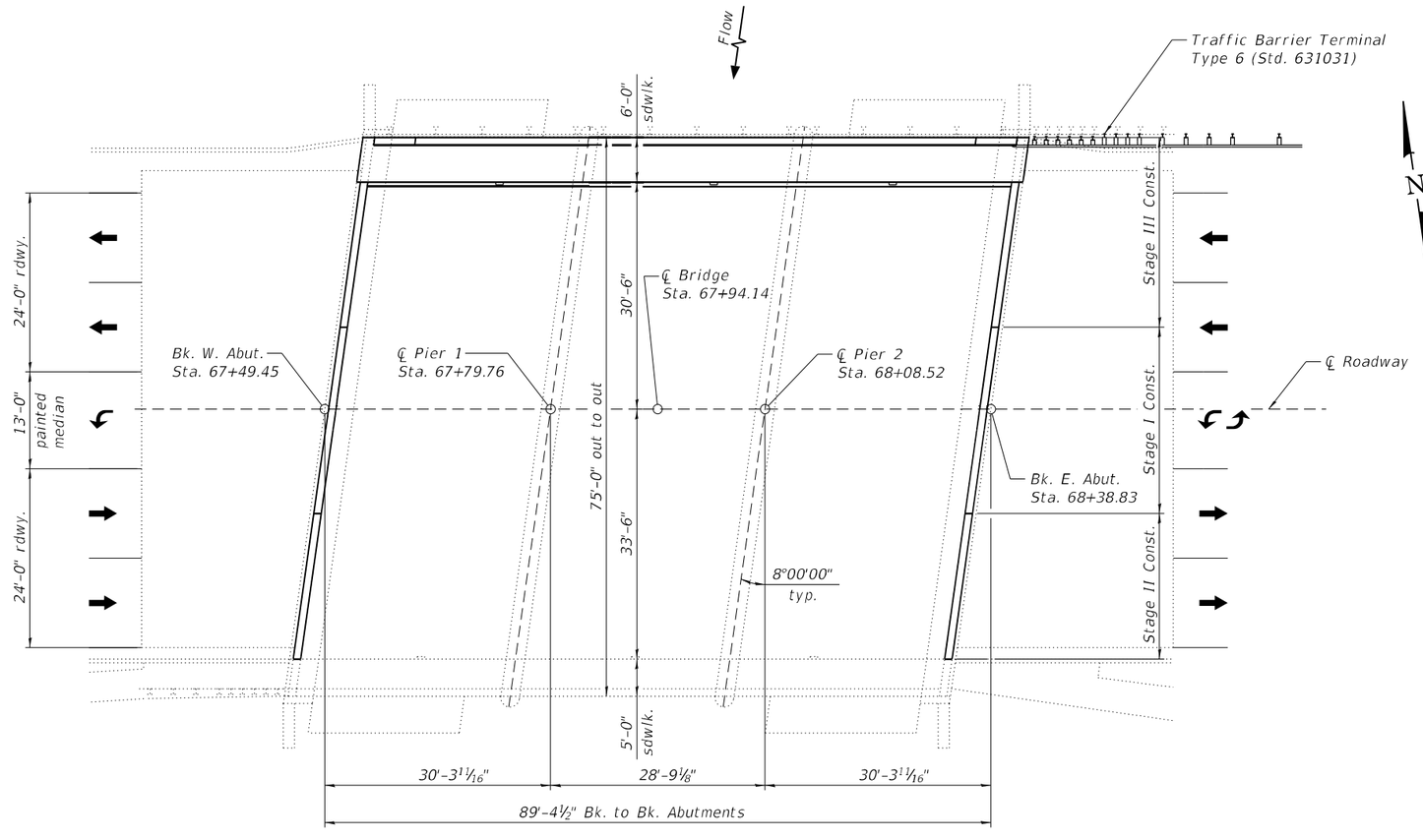

PLAN

GENERAL NOTES

Reinforcement bars designated (E) shall be epoxy coated.

Plan dimensions and details relative to the existing structure have been taken from existing plans are subject to nominal construction variations. The Contactor shall field verify existing dimensions and details affecting new construction and make necessary approved adjustments prior to construction or ordering of materials. Such variations shall not be cause for additional compensation for a change in scope of the work, however, the Contractor will be paid for the quantity actually furnished at the unit price bid for the work.

Existing reinforcement shall be cleaned, straightened and incorporated into the new construction. Cost included with Concrete Wearing Surface Removal.

Protective coat shall be applied to the top surface of the new concrete overlay and the top and inside surfaces of the new sidewalk and barrier.

The Contractor shall use extreme care during concrete removal so as not to damage the beams.

Any reinforcement bars that are damaged during concrete removal operations shall be repaired or replaced using an approved bar splicer or anchorage system. Cost incidental to "Concrete Removal".

SCOPE OF WORK

1. Hatch block and portions of concrete wearing surface to be repaired.
2. Construct a new sidewalk with barrier and railing along the north edge of bridge.
3. Provide floor drains beneath new sidewalk.

LICENSED STRUCTURAL ENGINEER ★ MICHAEL T. HALEY 081-005991 CHATHAM ★ STATE OF ILLINOIS

Michael T. Haley 10/02/2023

Michael T. Haley — Date
Licensed Structural Engineer
State of Illinois No. 081-005991
Expires 11/30/2024

DESIGN SPECIFICATIONS

(New Construction)
2002 AASHTO Standard Specifications for Highway Bridges, 17th Edition

DESIGN STRESSES

FIELD UNITS - NEW CONSTRUCTION
f'c = 4,000 psi (Superstructure)
fy = 60,000 psi (Reinforcement)

LOADING HS-20

(Original Construction)
Allow 25 #/sq. ft. for future wearing surface.

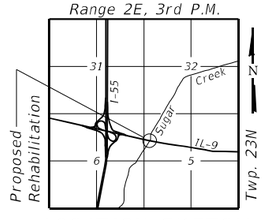

LOCATION SKETCH

GENERAL PLAN AND ELEVATION
IL RTE. 9 OVER SUGAR CREEK
F.A.P. RTE. 693 SECTION (129)RS-4
MCLEAN COUNTY
STATION 67+94.14
STRUCTURE NO. 057-0190

MODEL: Default
FILE NAME: E:\1713\Struct\SN 057-0190\Final Design\CADD\CADD_Sheets\057O190-70855-001-GPE.dgn

10/9/2023 10:07:47 AM

LIN ENGINEERING, LTD.
Consulting Engineers
Springfield, Illinois

USER NAME =	DESIGNED - MTH	REVISED -	
	CHECKED - CZ	REVISED -	
PLOT SCALE =	DRAWN - AJF	REVISED -	
PLOT DATE = 10/9/2023	CHECKED - CZ	REVISED -	

STATE OF ILLINOIS
DEPARTMENT OF TRANSPORTATION

SHEET 1 OF 11 SHEETS

F.A.P. RTE.	SECTION	COUNTY	TOTAL SHEETS	SHEET NO.
693	(129)RS-4	MCLEAN	218	136
		CONTRACT NO. 70855		
	ILLINOIS	FED. AID PROJECT		

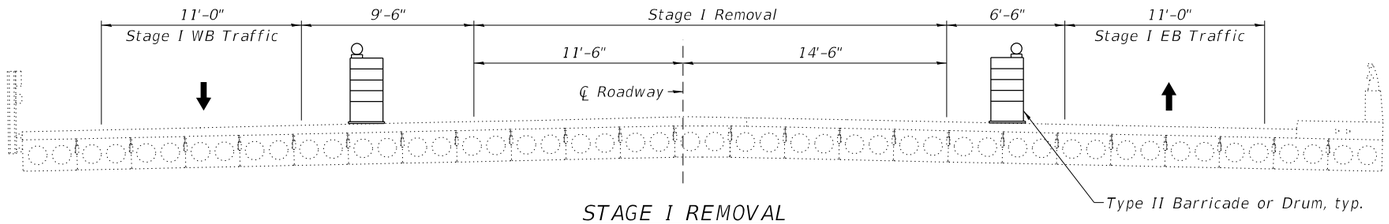

STAGE I REMOVAL

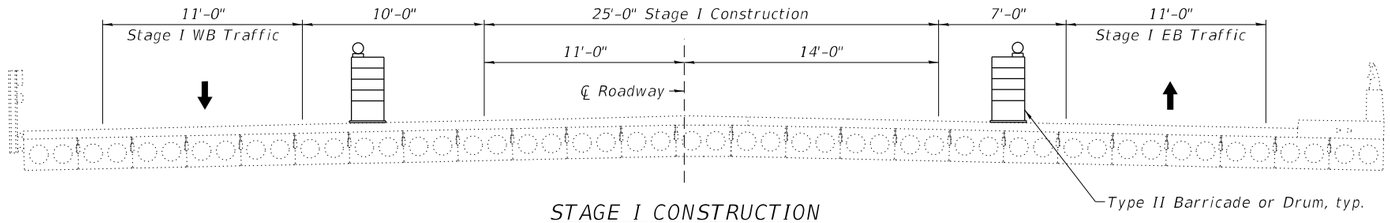

STAGE I CONSTRUCTION

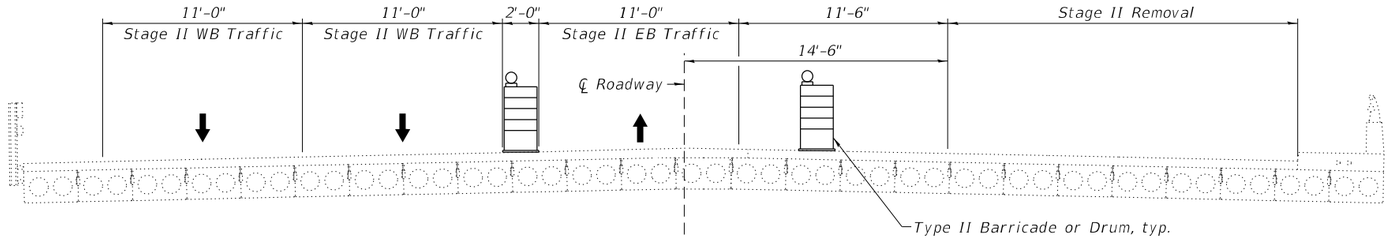

STAGE II REMOVAL

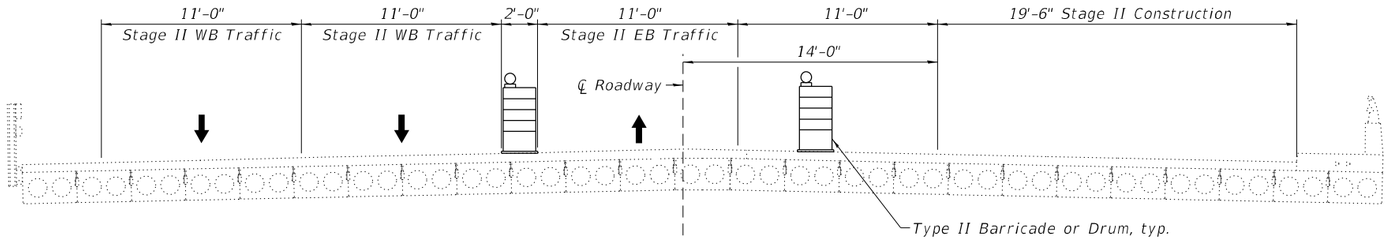

STAGE II CONSTRUCTION

Notes:
All sections are looking East.
See roadway plans for temporary barrier quantities.

MODEL: Default
FILE NAME: E:\1713\Struct\SN 057-0190\Final Design\CADD\CADD_Sheets\0570190-70855-002-Stage Const DIL.dgn

10/9/2023 10:07:48 AM

LIN ENGINEERING, LTD.
Consulting Engineers
Springfield, Illinois

USER NAME =	DESIGNED - MTH	REVISED -	
	CHECKED - CZ	REVISED -	
PLOT SCALE =	DRAWN - AJF	REVISED -	
PLOT DATE = 10/9/2023	CHECKED - CZ	REVISED -	

STATE OF ILLINOIS
DEPARTMENT OF TRANSPORTATION

STAGE CONSTRUCTION DETAILS
STRUCTURE NO. 057-0190
SHEET 2 OF 11 SHEETS

F.A.P. RTE.	SECTION	COUNTY	TOTAL SHEETS	SHEET NO.
693	(129)RS-4	MCLEAN	218	137
		CONTRACT NO. 70855		
	ILLINOIS	FED. AID PROJECT		

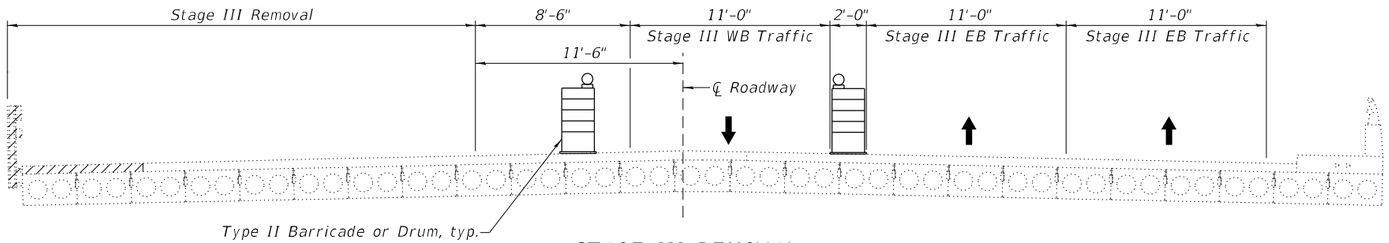

STAGE III REMOVAL

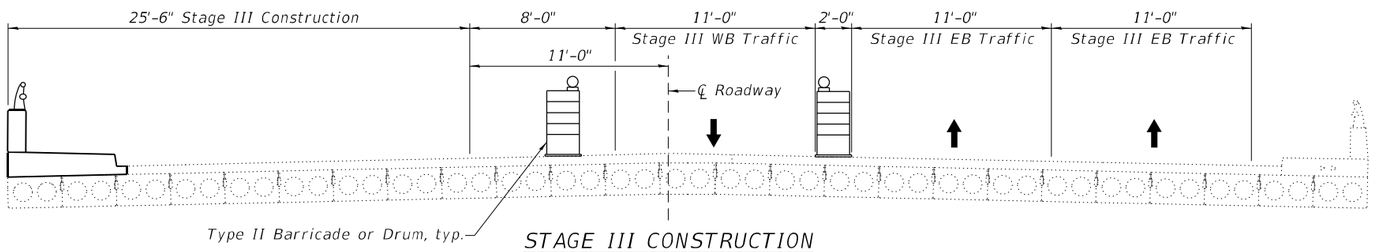

STAGE III CONSTRUCTION

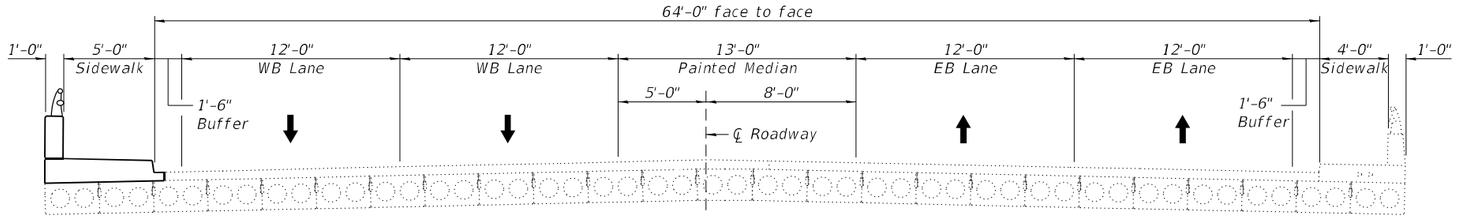

PROPOSED CROSS SECTION

Notes:
All sections are looking East.
See roadway plans for temporary barrier quantities.
Hatched area represents limit of Concrete Removal.
Cost of removing Steel Bridge Rail is included with Concrete Wearing Surface Removal.

MODEL: Default
FILE NAME: E:\1713\Struct\SN 057-0190\Final Design\CADD\CADD_Sheets\057019O-70855-003-Stage Const DIL.dgn
10/9/2023 10:07:48 AM

LIN ENGINEERING,LTD.
Consulting Engineers
Springfield, Illinois

USER NAME =	DESIGNED - MTH	REVISED -	
	CHECKED - CZ	REVISED -	
PLOT SCALE =	DRAWN - AJF	REVISED -	
PLOT DATE = 10/9/2023	CHECKED - CZ	REVISED -	

STATE OF ILLINOIS
DEPARTMENT OF TRANSPORTATION

STAGE CONSTRUCTION DETAILS
STRUCTURE NO. 057-0190
SHEET 3 OF 11 SHEETS

F.A.P. RTE.	SECTION	COUNTY	TOTAL SHEETS	SHEET NO.
693	(129)RS-4	MCLEAN	218	138
		CONTRACT NO. 70855		
	ILLINOIS	FED. AID PROJECT		

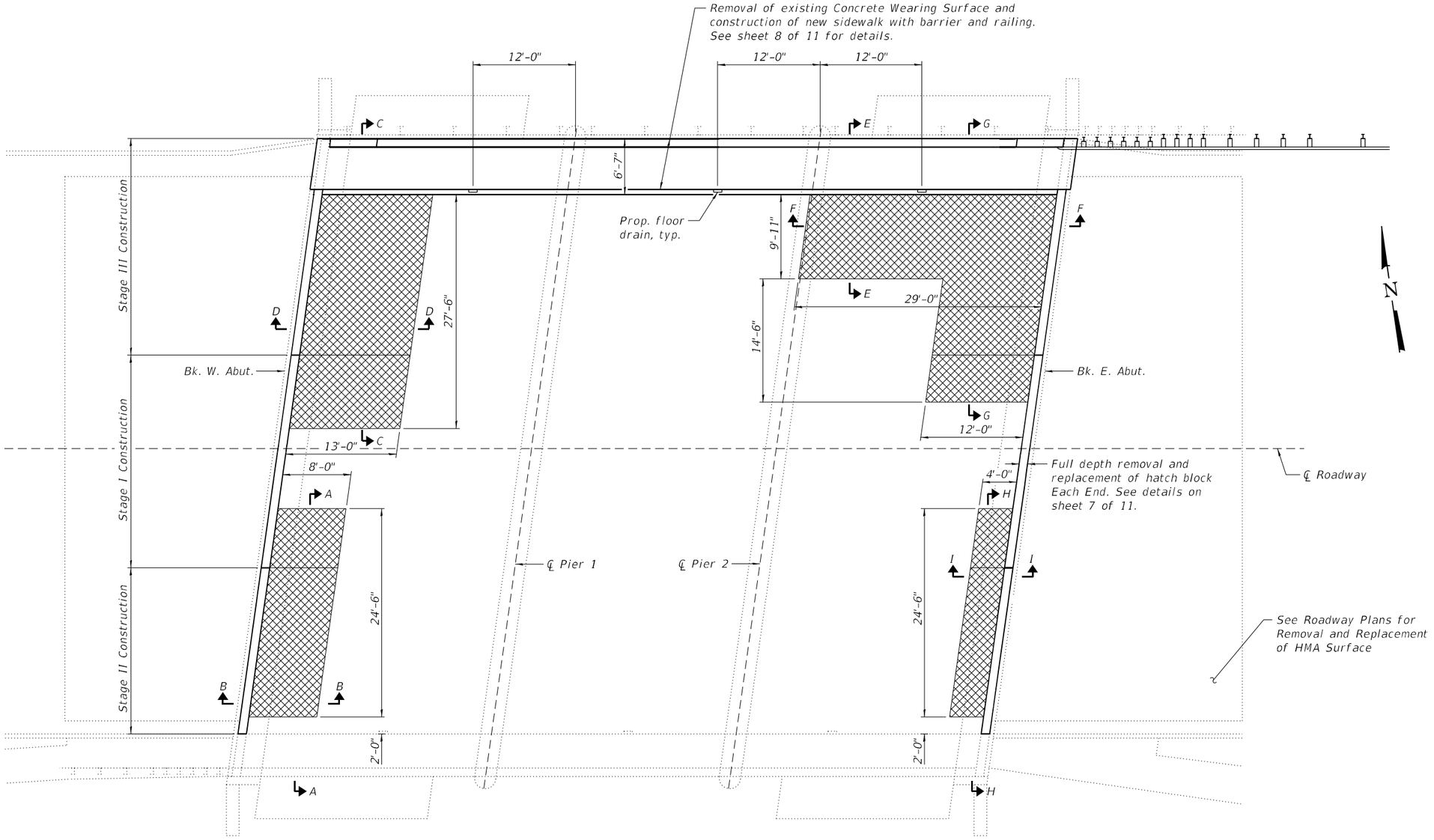

LEGEND

Remove and replace existing 5" concrete wearing surface

PLAN

Notes:

Contractor to verify patch sizes prior to ordering material and fabrication.

Repair areas shown are estimated. The Engineer shall document actual locations of repairs on as-built plans.

See sheets 5 and 6 of 11 for Sections A-A thru I-I.

MODEL: Default
FILE NAME: E:\1713\Struct\SN 057-0190\Final Design\CADD\CADD_Sheets\057019O-70855-004-Wrg Srf Rpr Plan.dgn
10/9/2023 10:07:49 AM

LIN ENGINEERING, LTD.
Consulting Engineers
Springfield, Illinois

USER NAME =	DESIGNED - MTH	REVISED -	
	CHECKED - CZ	REVISED -	
PLOT SCALE =	DRAWN - AJF	REVISED -	
PLOT DATE = 10/9/2023	CHECKED - CZ	REVISED -	

STATE OF ILLINOIS
DEPARTMENT OF TRANSPORTATION

WEARING SURFACE REPAIR PLAN
STRUCTURE NO. 057-0190
SHEET 4 OF 11 SHEETS

F.A.P. RTE.	SECTION	COUNTY	TOTAL SHEETS	SHEET NO.
693	(129)RS-4	MCLEAN	218	139
		CONTRACT NO. 70855		
	ILLINOIS FED. AID PROJECT			

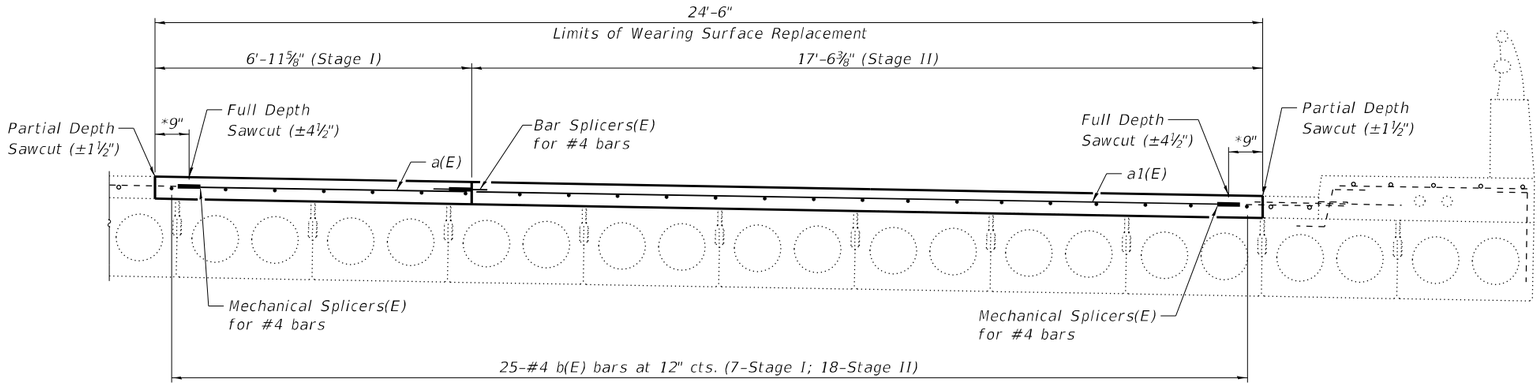

SECTION A-A

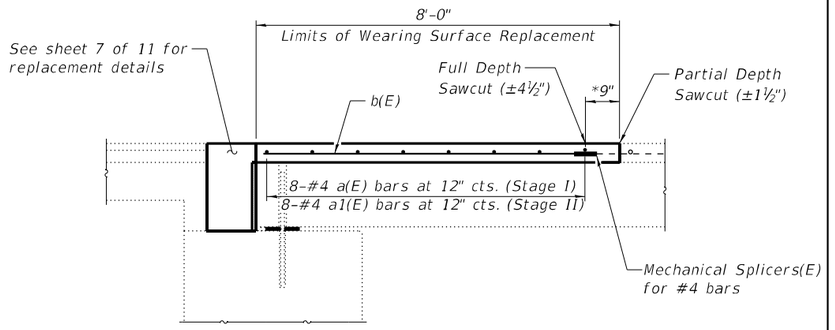

SECTION B-B

*Incorporate ±9" of existing rebar into new construction.

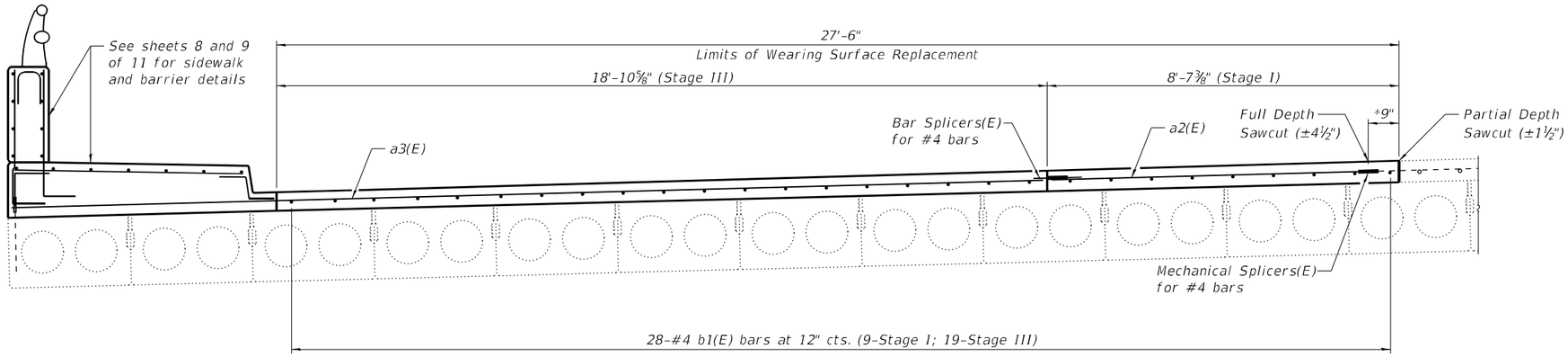

SECTION C-C

Notes:
Contractor to verify patch sizes prior to ordering material and fabrication.
See approved list of mechanical splicers for alternatives.
See Sheet 6 of 11 for bar list and bill of material.

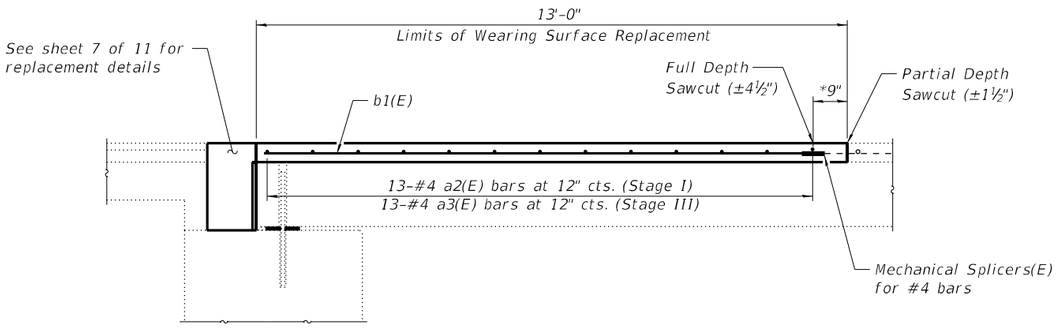

SECTION D-D

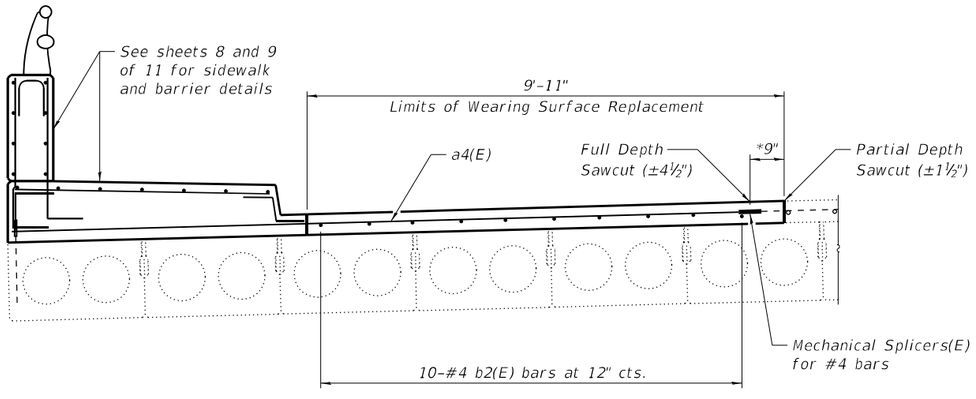

SECTION E-E

LIN ENGINEERING, LTD. Consulting Engineers Springfield, Illinois	USER NAME =	DESIGNED - MTH	REVISED -	STATE OF ILLINOIS DEPARTMENT OF TRANSPORTATION	WEARING SURFACE REPAIR DETAILS STRUCTURE NO. 057-0190
		CHECKED - CZ	REVISED -		
	PLOT SCALE =	DRAWN - AJF	REVISED -		
	PLOT DATE = 10/9/2023	CHECKED - CZ	REVISED -		SHEET 5 OF 11 SHEETS

F.A.P. RTE.	SECTION	COUNTY	TOTAL SHEETS	SHEET NO.
693	(129)RS-4	MCLEAN	218	140
			CONTRACT NO. 70855	
		ILLINOIS	FED. AID PROJECT	

MODEL: Default
FILE NAME: E:\1713\Struct\SN 057-0190\Final Design\CADD\CADD_Sheets\0570190-70855-005-Wrg Srf Rpr Dtls.dgn

10/9/2023 10:07:49 AM

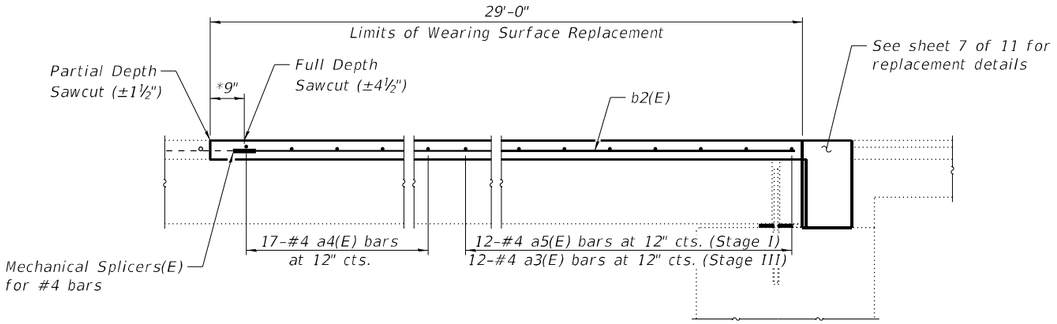

SECTION F-F

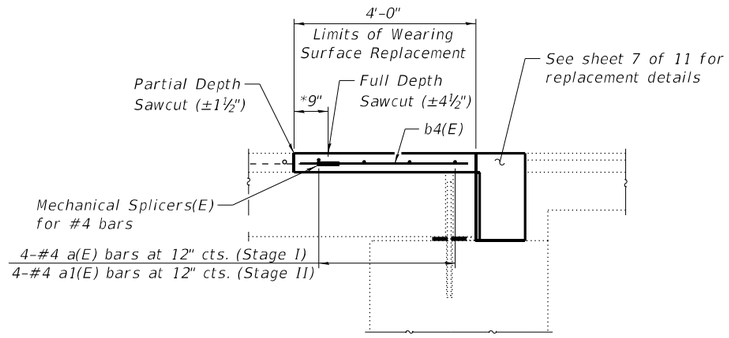

SECTION I-I

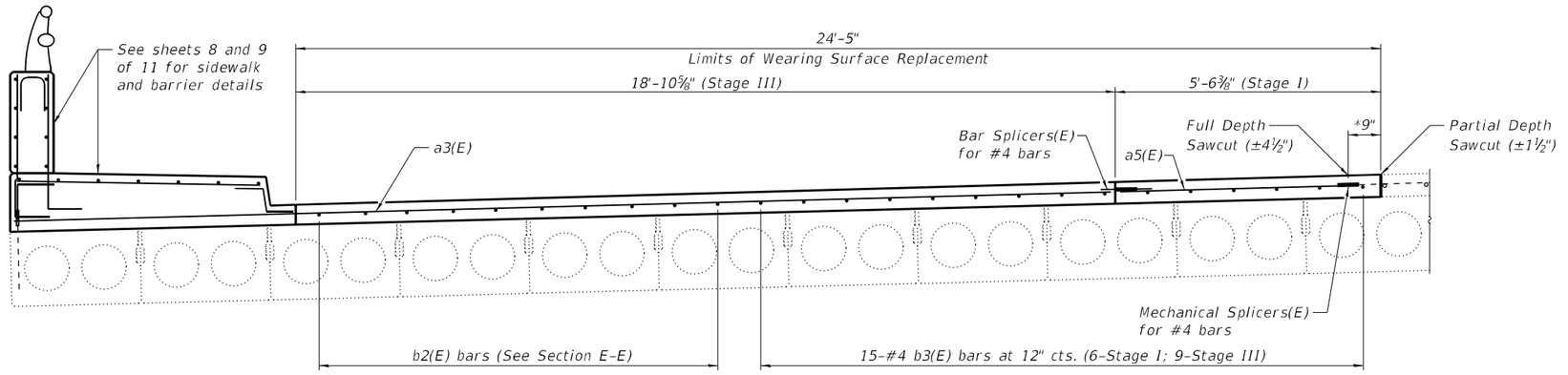

SECTION G-G

*Incorporate ±9" of existing rebar into new construction.

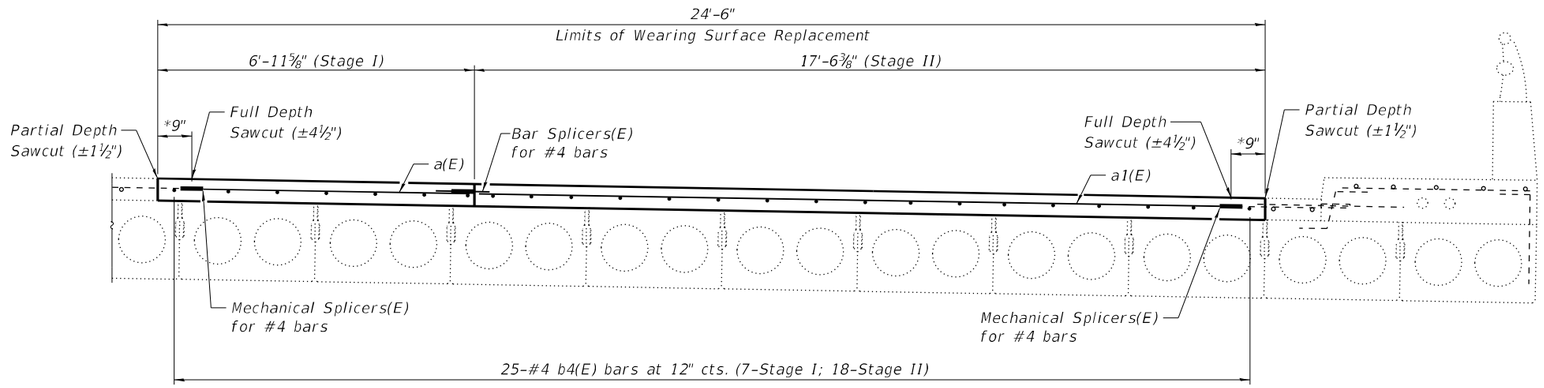

SECTION H-H

BILL OF MATERIAL

Bar	No.	Size	Length	Shape
a(E)	12	#4	6'-1"	———
a1(E)	12	#4	16'-8"	———
a2(E)	13	#4	7'-9"	———
a3(E)	25	#4	25'-2"	———
a4(E)	17	#4	15'-7"	———
a5(E)	12	#4	4'-8"	———
b(E)	25	#4	7'-1"	———
b1(E)	28	#4	12'-1"	———
b2(E)	10	#4	28'-1"	———
b3(E)	15	#4	11'-1"	———
b4(E)	25	#4	3'-1"	———
Reinforcement Bars, Epoxy Coated		Pound	1,590	
Bar Splicers		Each	37	
Mechanical Splicers		Each	169	
Concrete Wearing Surface Removal		Sq. Yd.	124	
Concrete Wearing Surface, 5"		Sq. Yd.	124	

Notes:
Contractor to verify patch sizes prior to ordering material and fabrication.
See approved list of mechanical splicers for alternatives.

MODEL: Default
FILE NAME: E:\1713\Struct\SN 057-0190\Final Design\CADD\CADD_Sheets\0570190-70855-006-Wrg Srf Rpr Dtl.dgn

LIN ENGINEERING, LTD.
Consulting Engineers
Springfield, Illinois

USER NAME =		DESIGNED - MTH	REVISED -	
		CHECKED - CZ	REVISED -	
PLOT SCALE =		DRAWN - AJF	REVISED -	
PLOT DATE =	10/9/2023	CHECKED - CZ	REVISED -	

STATE OF ILLINOIS
DEPARTMENT OF TRANSPORTATION

WEARING SURFACE REPAIR DETAILS
STRUCTURE NO. 057-0190
SHEET 6 OF 11 SHEETS

F.A.P. RTE.	SECTION	COUNTY	TOTAL SHEETS	SHEET NO.
693	(129)RS-4	MCLEAN	218	141
		CONTRACT NO. 70855		
	ILLINOIS	FED. AID PROJECT		

10/9/2023 10:07:50 AM

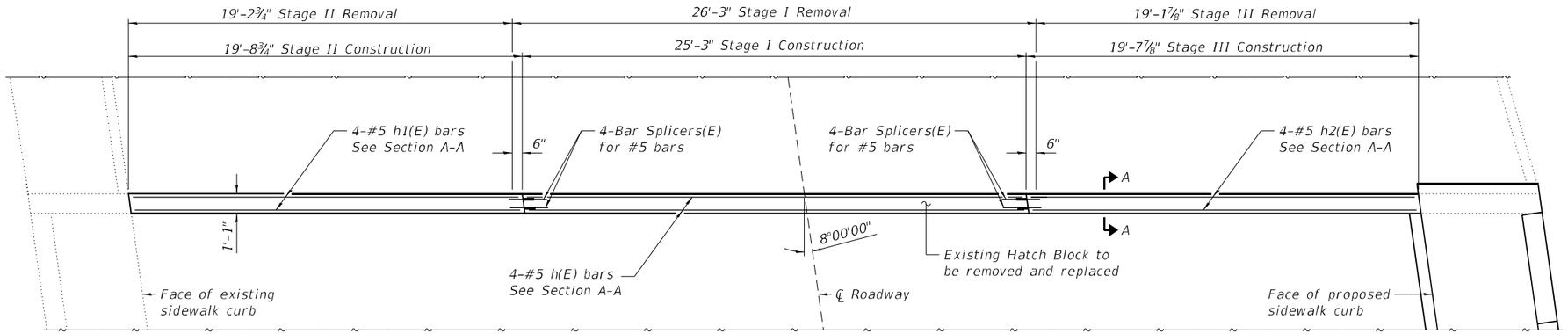

PLAN

(Showing West Abutment; East Abutment similar)

N

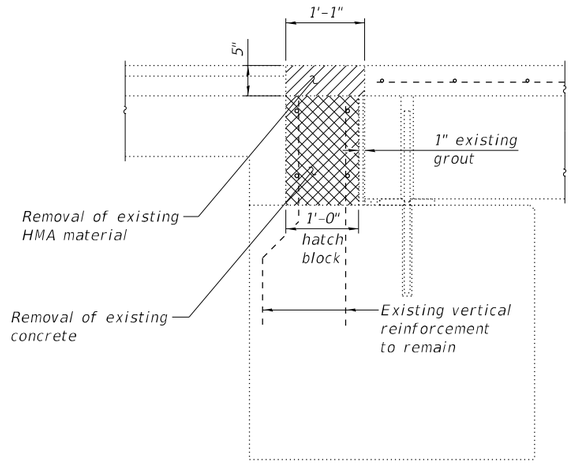

SECTION A-A

(Showing removal)

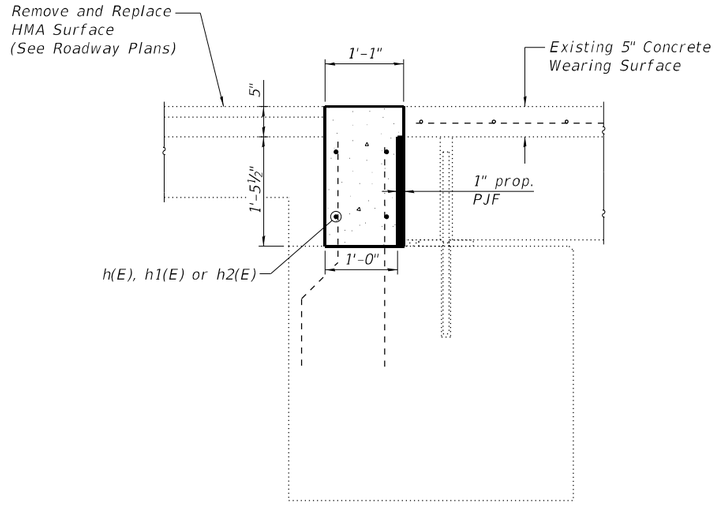

SECTION A-A

(Showing proposed)

BILL OF MATERIAL
TWO ABUTMENTS

Bar	No.	Size	Length	Shape
h(E)	8	#5	24'-11"	——
h1(E)	8	#5	19'-5"	——
h2(E)	8	#5	19'-4"	——
Hot-Mix Asphalt Surface Removal, 5"		Sq. Yd.	17	
Concrete Removal		Cu. Yd.	7.0	
Concrete Superstructure		Cu. Yd.	9.0	
Reinforcement Bars, Epoxy Coated		Pound	540	

Note:
See Sheet 11 of 11 for Bar Splicer details.

MODEL: Default
FILE NAME: E:\1713\Struct\SN 057-0190\Final Design\CADD\CADD_Sheets\0570190-70855-007-Super Dtls.dgn

10/9/2023 10:07:50 AM

LIN ENGINEERING, LTD.
Consulting Engineers
Springfield, Illinois

USER NAME =	DESIGNED - MTH	REVISED -	
	CHECKED - CZ	REVISED -	
PLOT SCALE =	DRAWN - AJF	REVISED -	
PLOT DATE = 10/9/2023	CHECKED - CZ	REVISED -	

STATE OF ILLINOIS
DEPARTMENT OF TRANSPORTATION

SUPERSTRUCTURE DETAILS
STRUCTURE NO. 057-0190
SHEET 7 OF 11 SHEETS

F.A.P. RTE.	SECTION	COUNTY	TOTAL SHEETS	SHEET NO.
693	(129)RS-4	MCLEAN	218	142
		CONTRACT NO. 70855		
	ILLINOIS	FED. AID PROJECT		

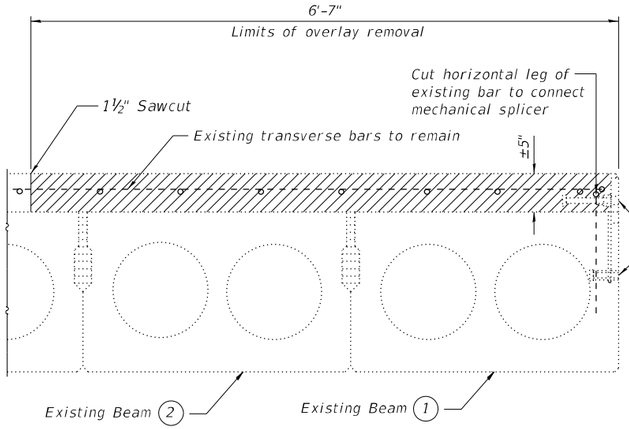

REMOVAL LIMITS AT NORTH SIDEWALK

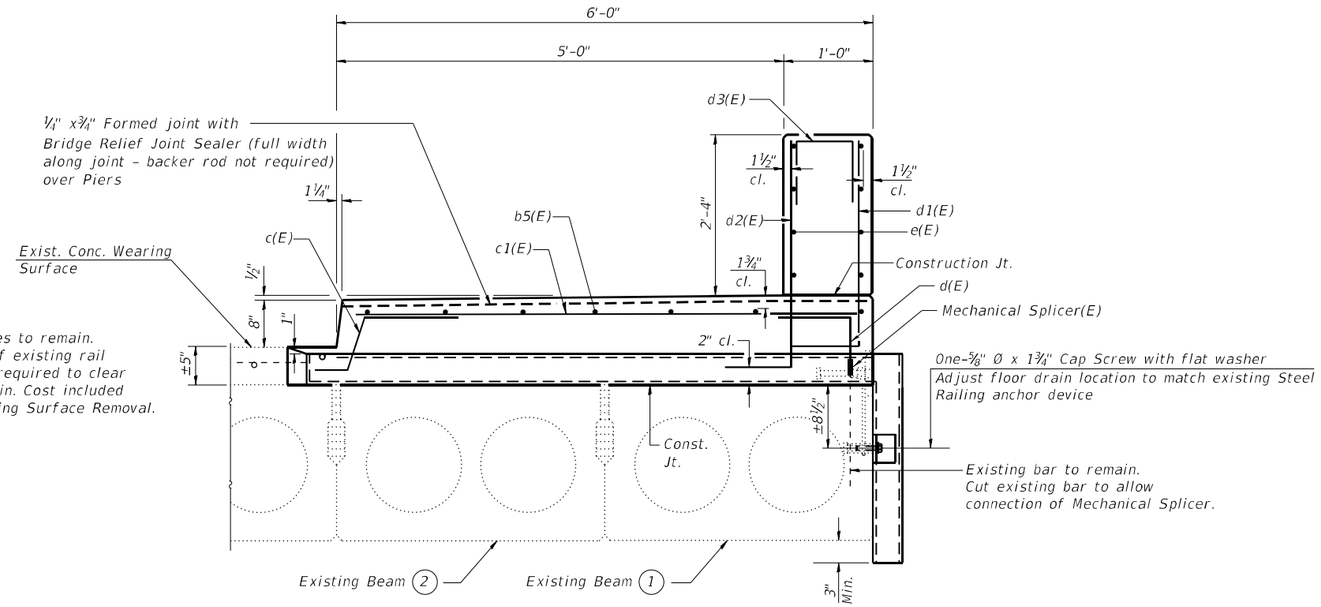

SECTION B-B

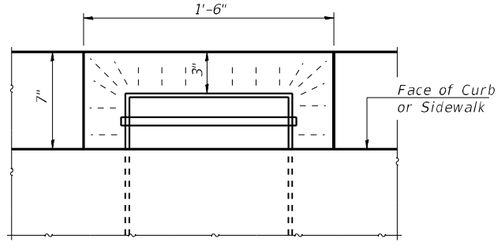

PLAN AT FLOOR DRAIN

Notes:
The exterior surfaces of the floor drains shall be coated by the manufacturer with a color that matches the concrete.
All cap screws and washers shall be galvanized according to AASHTO M 232.
See sheet 9 of 11 for bar details, Bill of Material and location of Section B-B.

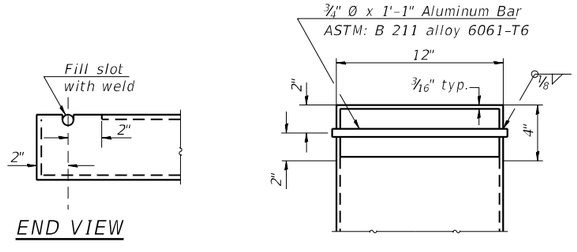

FLOOR DRAIN INLET DETAILS

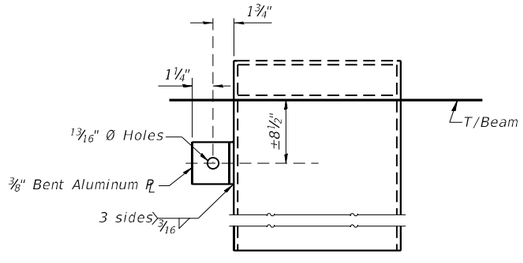

SECTION C-C

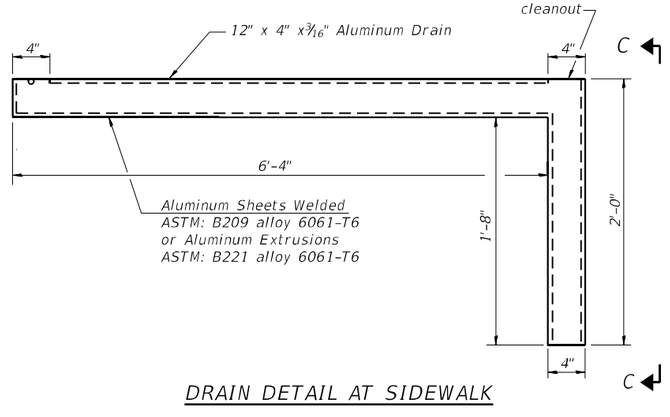

DRAIN DETAIL AT SIDEWALK

*

MODEL: Default
FILE NAME: E:\7133\Struct\SN 057-0190\Final Design\CADD\CADD_Sheets\057090-70855-008-Super Dtls.dgn

10/9/2023 10:07:51 AM

LIN ENGINEERING, LTD. Consulting Engineers Springfield, Illinois	USER NAME =	DESIGNED - MTH	REVISED -	STATE OF ILLINOIS DEPARTMENT OF TRANSPORTATION	SIDEWALK DETAILS STRUCTURE NO. 057-0190
		CHECKED - CZ	REVISED -		
	PLOT SCALE =	DRAWN - AJF	REVISED -		
	PLOT DATE = 10/9/2023	CHECKED - CZ	REVISED -		SHEET 8 OF 11 SHEETS

F.A.P. RTE.	SECTION	COUNTY	TOTAL SHEETS	SHEET NO.
693	(129)RS-4	MCLEAN	218	143
		CONTRACT NO. 70855		
	ILLINOIS	FED. AID PROJECT		

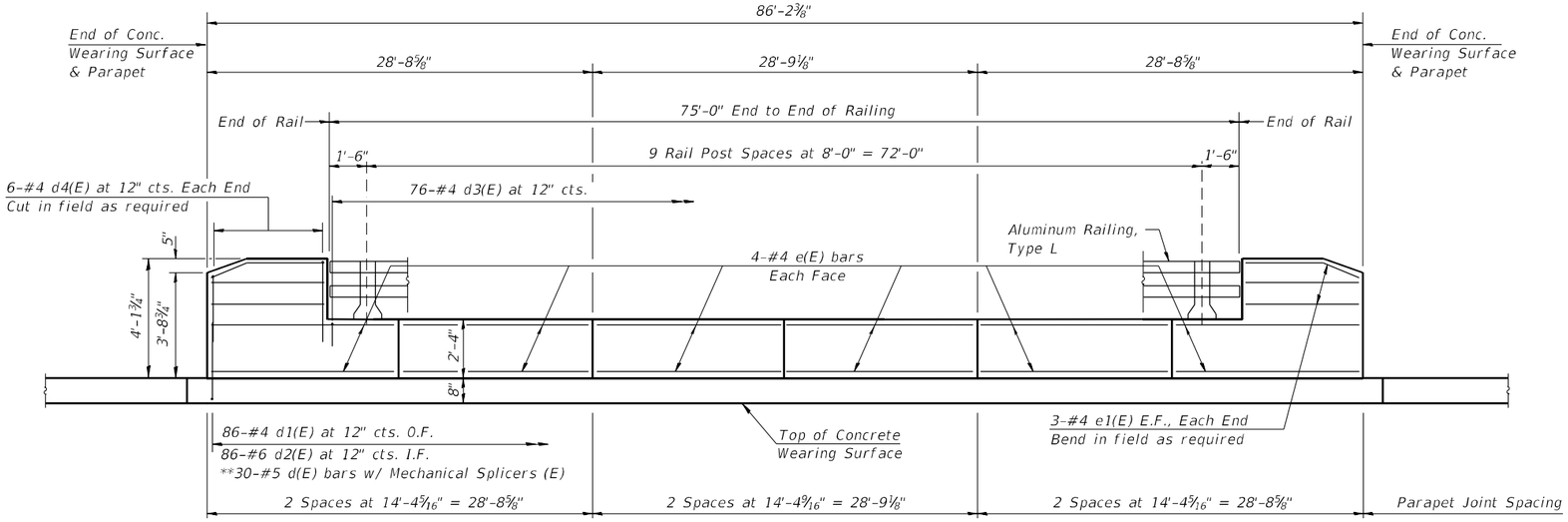

INSIDE ELEVATION OF NORTH PARAPET

(North Side - Looking South)

* Formed joint in Sidewalk over Piers.
See Sec. B-B on sheet 8 of 11.
** Two at each existing rail post

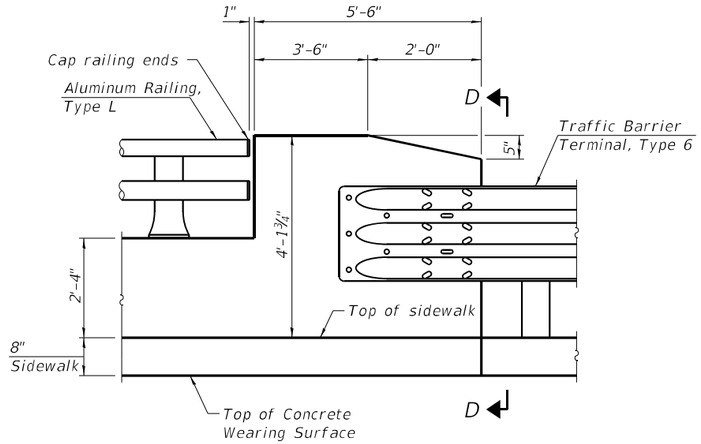

TYPE 6 RAIL ATTACHMENT DETAIL

(NE Corner)

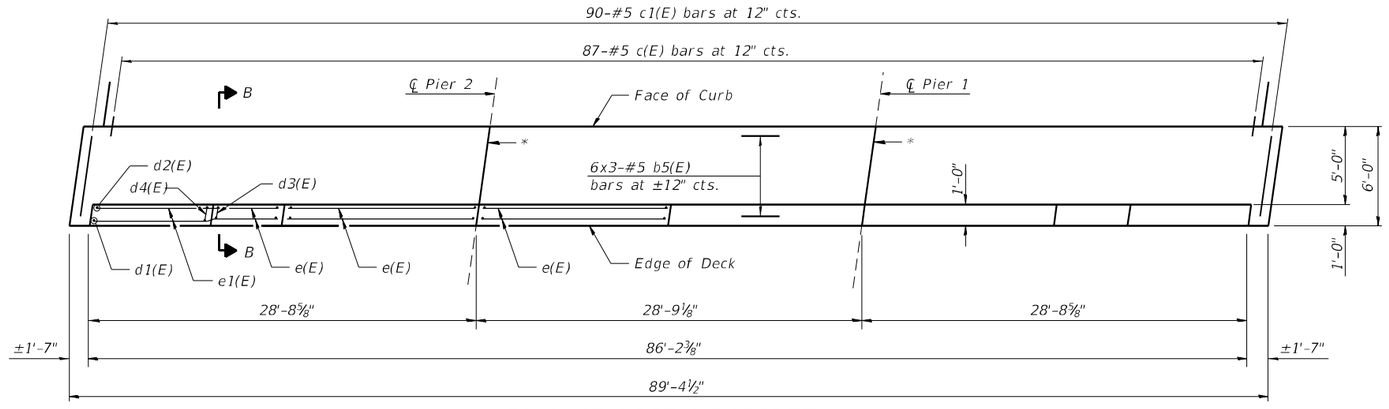

PLAN AT NORTH PARAPET

(Showing Concrete Sidewalk and Parapet)

E.F. - Each Face
O.F. - Outside Face
I.F. - Inside Face

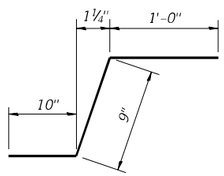

BAR c(E)

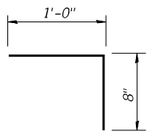

BAR d(E)

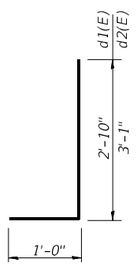

BARS d1(E) & d2(E)

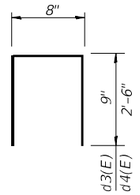

BARS d3(E) & d4(E)

MIN. BAR LAP

#5 bar = 3'-6"

Notes:
See sheet 8 of 11 for Section B-B.
See sheet 10 of 11 for bridge railing and rail post anchor device details.
The Polyurethane Sealant shall be according to Article 1050.04 of the Std. Spec. and the color shall be gray.
Bars indicated thus 6x3-#5 etc. indicates 6 lines of bars with 3 lengths per line.

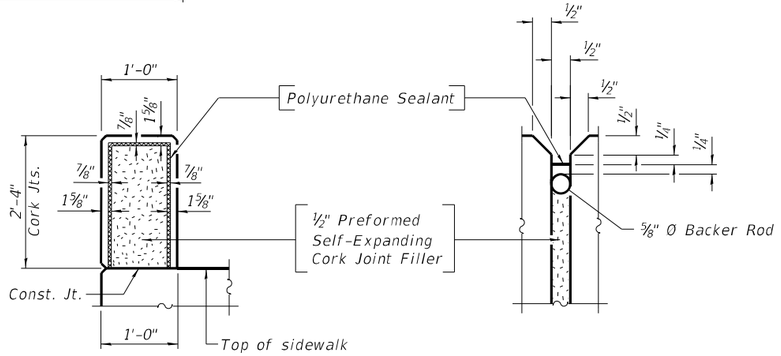

PARAPET JOINT DETAILS

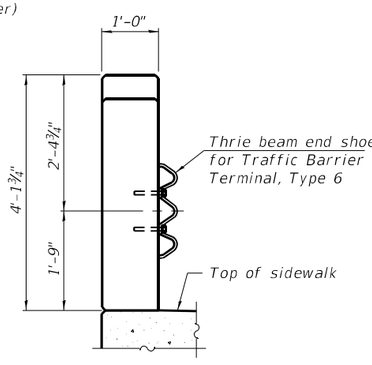

SECTION D-D

SIDEWALK BILL OF MATERIAL

Bar	No.	Size	Length	Shape
b5(E)	18	#5	32'-2"	
c(E)	87	#5	2'-7"	
c1(E)	90	#5	5'-7"	
d(E)	30	#5	1'-8"	
d1(E)	86	#4	3'-10"	
d2(E)	86	#6	4'-1"	
d3(E)	76	#4	2'-2"	
d4(E)	12	#4	5'-8"	
e(E)	48	#4	14'-0"	
e1(E)	12	#4	5'-2"	
Floor Drains			Each	3
Concrete Superstructure			Cu. Yd.	33.2
Reinforcement Bars, Epoxy Coated			Pound	2,810
Mechanical Splicers			Each	84
Concrete Wearing Surface Removal			Sq. Yd.	63

MODEL: Default
FILE NAME: E:\1713\Struct\SN 057-0190\Final Design\CADD\CADD_Sheets\0570190-70855-009-Super Dtls.dgn
10/9/2023 10:07:51 AM

LIN ENGINEERING, LTD.
Consulting Engineers
Springfield, Illinois

USER NAME =
PLOT SCALE =
PLOT DATE = 10/9/2023

DESIGNED - MTH
CHECKED - CZ
DRAWN - AJF
CHECKED - CZ

REVISED -
REVISED -
REVISED -
REVISED -

STATE OF ILLINOIS
DEPARTMENT OF TRANSPORTATION

SIDEWALK DETAILS
STRUCTURE NO. 057-0190
SHEET 9 OF 11 SHEETS

F.A.P. RTE.	SECTION	COUNTY	TOTAL SHEETS	SHEET NO.
693	(129)RS-4	MCLEAN	218	144
		CONTRACT NO. 70855		
	ILLINOIS FED. AID PROJECT			

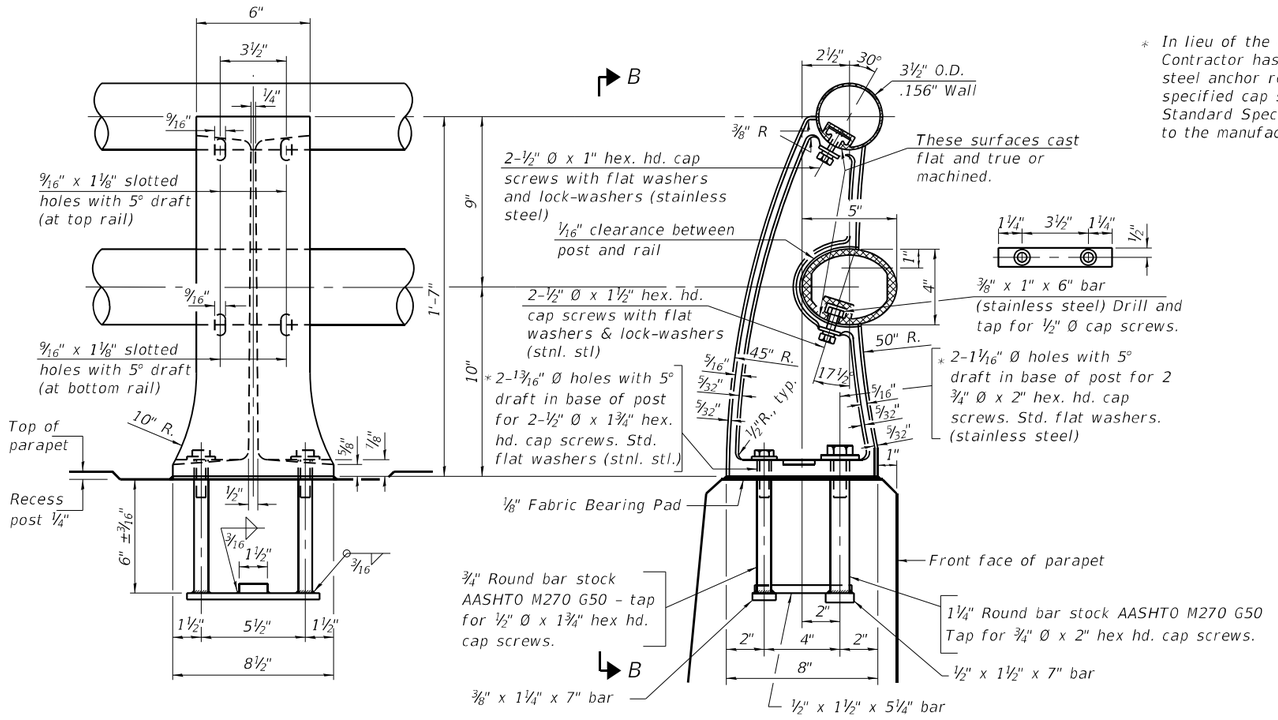

* *In lieu of the cast-in-place anchor device shown, the Contractor has the option of drilling and setting stainless steel anchor rods of the same diameter and grade as the specified cap screws according to Article 509.06 of the Standard Specifications. Embedment shall be according to the manufacturer's specifications.*

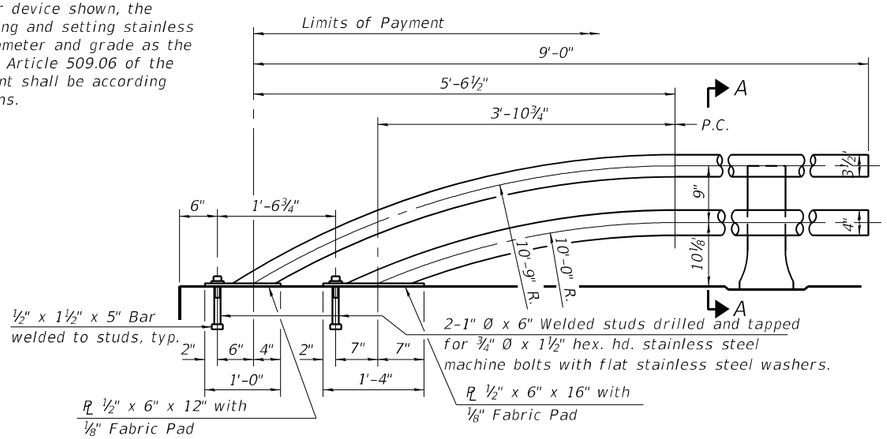

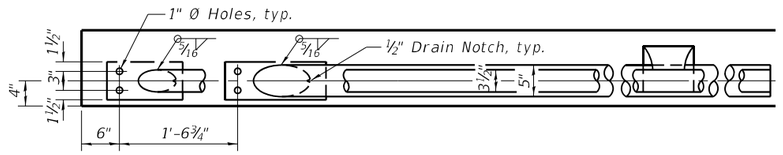

RAIL TERMINAL SECTION

Note: The end rail post shall be set back as required for the terminal rail section.

VIEW B-B

SECTION A-A

RAIL POST DETAILS

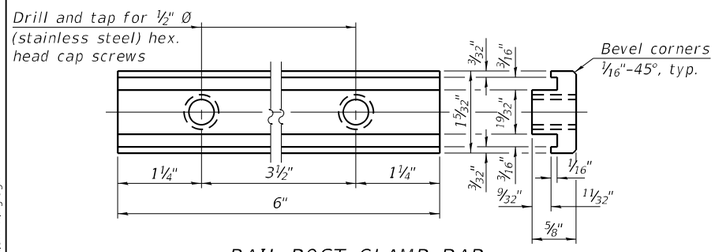

RAIL POST CLAMP BAR

For Top Rail

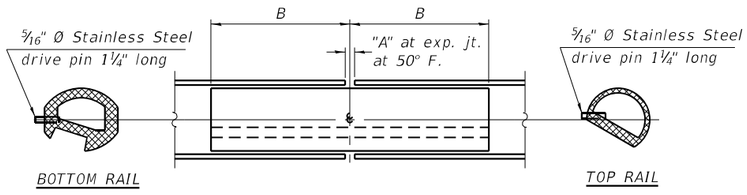

RAIL SPLICE

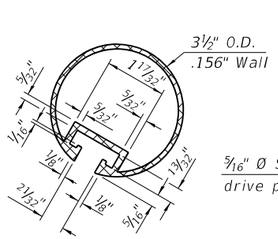

SECTION THRU TOP RAIL

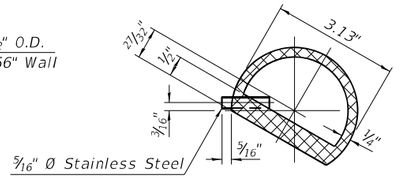

SECTION THRU TOP RAIL SPLICE

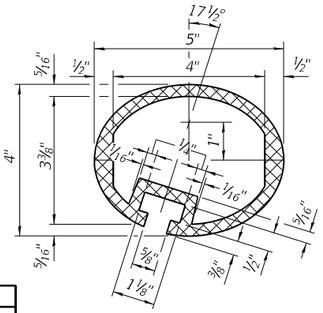

SECTION THRU BOTTOM RAIL

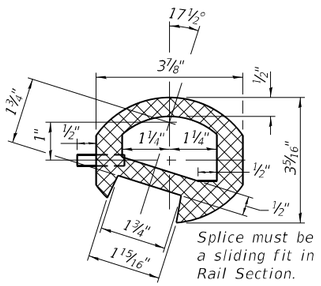

SECTION THRU BOTTOM RAIL SPLICE

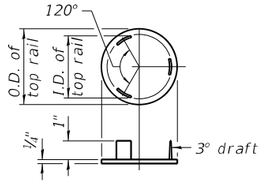

CAST END CAP

For top rail
Drive Fit Type

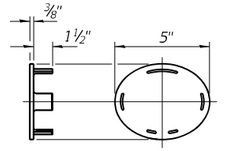

CAST END CAP

For bottom rail
Drive Fit Type

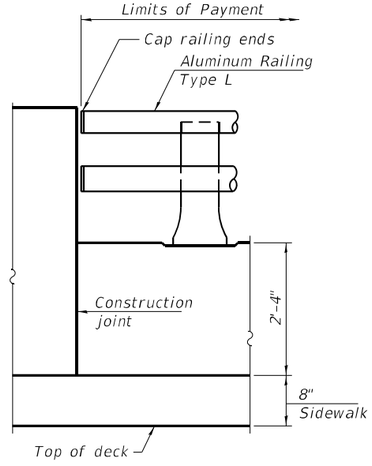

RAIL END TREATMENT FOR TYPE 5 AND 6 TERMINAL

RAILING CRITERIA

NCHRP 350 Test Level	4
Post Spacing Range	7'-0" - 10'-0"
Rail Weight (plf)	40

SPLICE DIMENSIONS

Location	T	A	B
All locs. not over exp. jts.	0	⅜"	1'-2"
Over Strip Seal Jt.	≤4"	2½"	1'-2"
Over Finger or Modular Jt.	≤9½"	5½"	1'-7¾"
Over Finger or Modular Jt.	≤15"	8¼"	2'-1¼"

T = ; total movement along centerline of roadway at expansion joint.

BILL OF MATERIAL

Item	Unit	Quantity
Aluminum Railing, Type L	Foot	75

Notes:

All Posts shall be normal to parapet.

All joints in rail shall be spliced per detail.

All exposed rail ends shall be capped per detail.

Provide 1-⅛" and 2-1/16" Aluminum Shims for 25% of the Posts. Rail elements shall be parallel to Grade, high spots shall be ground and low spots shimmed.

Place reinforcement bars to miss anchor rod locations.

See sheet 9 of 11 for rail post spacing.

R-20 10-12-2021

LIN ENGINEERING, LTD. Consulting Engineers Springfield, Illinois

USER NAME =	DESIGNED - MTH	REVISED -	
	CHECKED - CZ	REVISED -	
PLOT SCALE =	DRAWN - AJF	REVISED -	
PLOT DATE = 10/9/2023	CHECKED - CZ	REVISED -	

STATE OF ILLINOIS
DEPARTMENT OF TRANSPORTATION

ALUMINUM RAILING, TYPE L
STRUCTURE NO. 057-0190
SHEET 10 OF 11 SHEETS

F.A.P. RTE.	SECTION	COUNTY	TOTAL SHEETS	SHEET NO.
693	(129)RS-4	MCLEAN	218	145
		CONTRACT NO. 70855		
		ILLINOIS	FED. AID PROJECT	

MODEL: Default
FILE NAME: E:\1713\Struct\SN 057-0190\Final Design\CADD\CADD_Sheets\0570190-70855-010-Alum Rlng.dgn

10/9/2023 10:07:52 AM

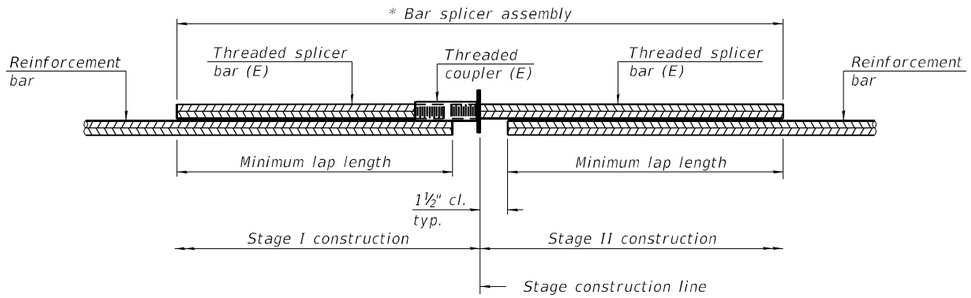

STANDARD BAR SPLICER ASSEMBLY PLAN

Only bar splicer assemblies as presented on the approved QPL list may be used.

Threaded splicer bar length = min. lap length + 1½" + thread length

* Epoxy not required on Bar Splicer Assembly components used in conjunction with black bars.

Location	Bar size	No. assemblies required	Minimum lap length
Hatch Block	#5	16	3'-4"
Wearing Surface	#4	37	2'-5"

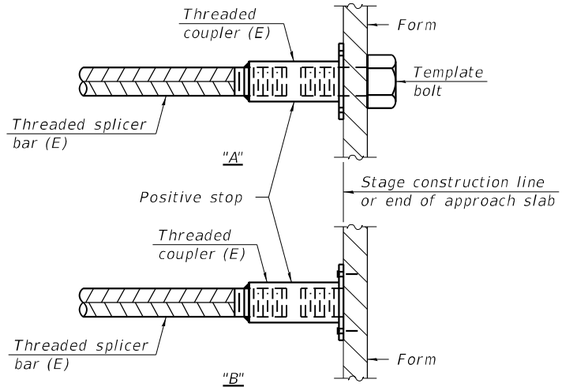

INSTALLATION AND SETTING METHODS

"A" : Set bar splicer assembly by means of a template bolt.
"B" : Set bar splicer assembly by nailing to wood forms or cementing to steel forms.
(E) : Indicates epoxy coating.

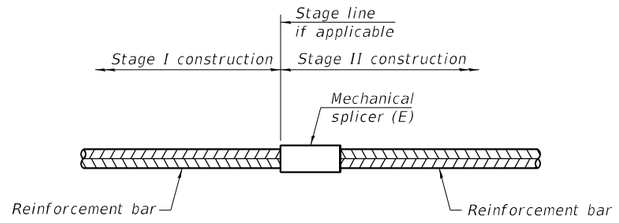

STANDARD MECHANICAL SPLICER

Location	Bar size	No. assemblies required
Sidewalk	#5	84
Wearing Surface	#4	169

Notes:
Splicer bars shall be deformed with threaded ends and have a minimum 60 ksi yield strength.
All reinforcement shall be lapped and tied to the splicer bars.
Bar splicer assemblies shall be epoxy coated according to the requirements for reinforcement bars. See Section 508 of the Standard Specifications.
See approved list of bar splicer assemblies and mechanical splicers for alternatives.

BSD-1 2-1-2023

LIN ENGINEERING,LTD. Consulting Engineers Springfield, Illinois

USER NAME =	DESIGNED - MTH	REVISED -	
	CHECKED - CZ	REVISED -	
PLOT SCALE =	DRAWN - AJF	REVISED -	
PLOT DATE = 10/9/2023	CHECKED - CZ	REVISED -	

STATE OF ILLINOIS
DEPARTMENT OF TRANSPORTATION

BAR SPLICER ASSEMBLY DETAILS
STRUCTURE NO. 057-0190
SHEET 11 OF 11 SHEETS

F.A.P. RTE.	SECTION	COUNTY	TOTAL SHEETS	SHEET NO.
693	(129)RS-4	MCLEAN	218	146
		CONTRACT NO. 70855		
	ILLINOIS	FED. AID PROJECT		

MODEL: Default
FILE NAME: E:\1713\Struct\SN 057-0190\Final Design\CADD\CADD_Sheets\057019O-70855-011-Bar Splicer.dgn
10/9/2023 10:07:53 AM

STAGE 1 CONSTRUCTION

INSTALL TRAFFIC CONTROL SIGNING, DEVICES, AND TEMPORARY PAVEMENT MARKING.

FULL DEPTH REMOVAL AND REPLACEMENT OF HATCH BLOCK FOR THE MIDDLE PORTION OF EXISTING STRUCTURE NO. 057-0190.

REMOVAL AND REPLACEMENT OF 5" CONCRETE WEARING SURFACE FOR THE MIDDLE PORTION OF EXISTING STRUCTURE NO. 057-0190.

TRAFFIC CONTROL AND PROTECTION

TRAFFIC CONTROL AND PROTECTION SHALL BE PERFORMED IN ACCORDANCE WITH THE TRAFFIC CONTROL PLAN, SECTION 701 OF THE STANDARD SPECIFICATIONS, AND HIGHWAY STANDARD 701602-10.

TWO-WAY TRAFFIC SHALL BE ACCOMMODATED AT ALL TIMES ON MARKET ST, EXCEPT DURING ISOLATED FLAGGER CONTROLLED LANE CLOSURES.

FLAGGER CONTROLLED LANE CLOSURES SHOULD BE PLANNED TO AVOID LANE CLOSURES DURING THE AM AND PM PEAK HOURS.

EXISTING TRAFFIC CONTROL SIGNS AND DEVICES WILL BE REMOVED OR BRACED BY THE CONTRACTOR AFTER THE PROPOSED TRAFFIC CONTROL REQUIREMENTS ARE MET, OR AS AUTHORIZED BY THE ENGINEER. SIGNS OR DEVICES LEFT IN PLACE AT THIS TIME ARE TO BE PROTECTED FROM DAMAGE BY THE CONTRACTOR.

THE CONTRACTOR SHALL SCHEDULE OPERATIONS TO ENSURE THAT NO DROP-OFF OF GREATER THAN 12" WITHIN 8' OF THE TRAVEL LANE IS PRESENT DURING NON-WORKING HOURS.

THE FOLLOWING TRAFFIC CONTROL STANDARDS ARE THE MINIMUM REQUIREMENTS FOR THE TRAFFIC FOR THIS PROJECT: 701501, 701602, 701701, 701801, AND 701901.

THE CONTRACTOR MUST MAINTAIN ACCESS TO ALL PROPERTIES AND ENTRANCES AT ALL TIMES.

PORTABLE CHANGEABLE MESSAGE SIGNS SHALL BE PLACED AND APPROVED BY THE ENGINEER. THE MESSAGES SHALL BE PROVIDED BY THE ENGINEER AND SHALL BE IN PLACE 7 DAYS PRIOR TO A STAGE CHANGE. THIS WORK SHALL BE PAID FOR AS "CHANGEABLE MESSAGE SIGN" PER CALENDAR DAY.

DEPICTED TRAFFIC CONTROL IS A MINIMUM REQUIREMENT AND OTHER WORK OR SIGNING MAY BE REQUIRED AS PER THE INSTRUCTION OF THE ENGINEER. THE COST INCURRED TO COMPLY WILL BE INCLUDED IN THE PAY ITEM "TRAFFIC CONTROL AND PROTECTION (SPECIAL)."

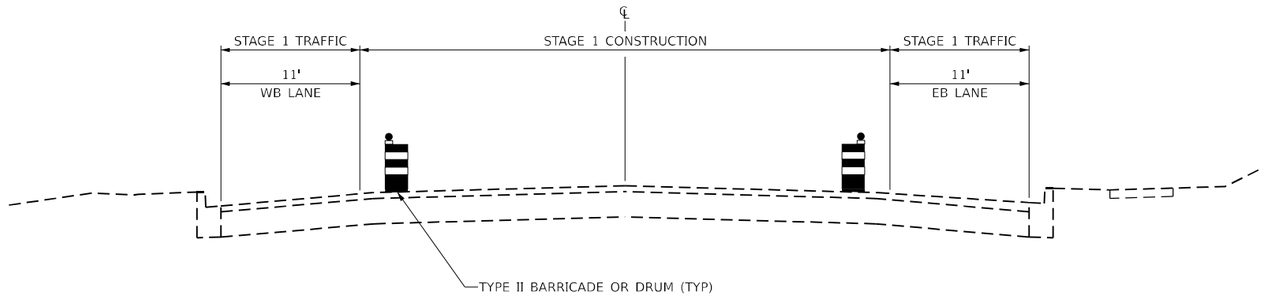

STAGE 1 TYPICAL SECTION

MARKET STREET

STA 63+72.99 TO STA 72+15.93

NOTES:

1. SEE STAGE 1 CONSTRUCTION AND TRAFFIC CONTROL PLANS FOR MORE INFORMATION.
2. SEE STRUCTURAL PLANS FOR MORE INFORMATION.

FINAL SURVEY	BY	DATE
NOTE BOOK		
NO.		
SURVEYED		
PLOTTED		
TEMPLATE		
AREAS		
AREAS CHECKED		

ORIGINAL SURVEY	BY	DATE
NOTE BOOK		
NO.		
SURVEYED		
PLOTTED		
TEMPLATE		
AREAS		
AREAS CHECKED		

MODEL: Stage 1 Typical
FILE NAME: V:\4216 - IL 9 Bloomington\CADD\CADD Sheets\D570855-sht-staging-typicals.dgn

Hutchison Engineering, Inc.

USER NAME = BDeCraene	DESIGNED -	REVISED -
	DRAWN -	REVISED -
PLOT SCALE = 0.16666633 ' / In.	CHECKED -	REVISED -
PLOT DATE = 10/17/2023	DATE -	REVISED -

STATE OF ILLINOIS
DEPARTMENT OF TRANSPORTATION

FAP 693 (IL RTE 9)
STAGE 1 CONSTRUCTION NOTES & TYPICAL SECTION

SCALE: N/A | SHEET 1 OF 1 SHEETS | STA. | TO STA.

F.A.P. RTE.	SECTION	COUNTY	TOTAL SHEETS	SHEET NO.
693	(129)RS-4	McLEAN	218	147
		CONTRACT NO. 70855		
	ILLINOIS	FED. AID PROJECT		

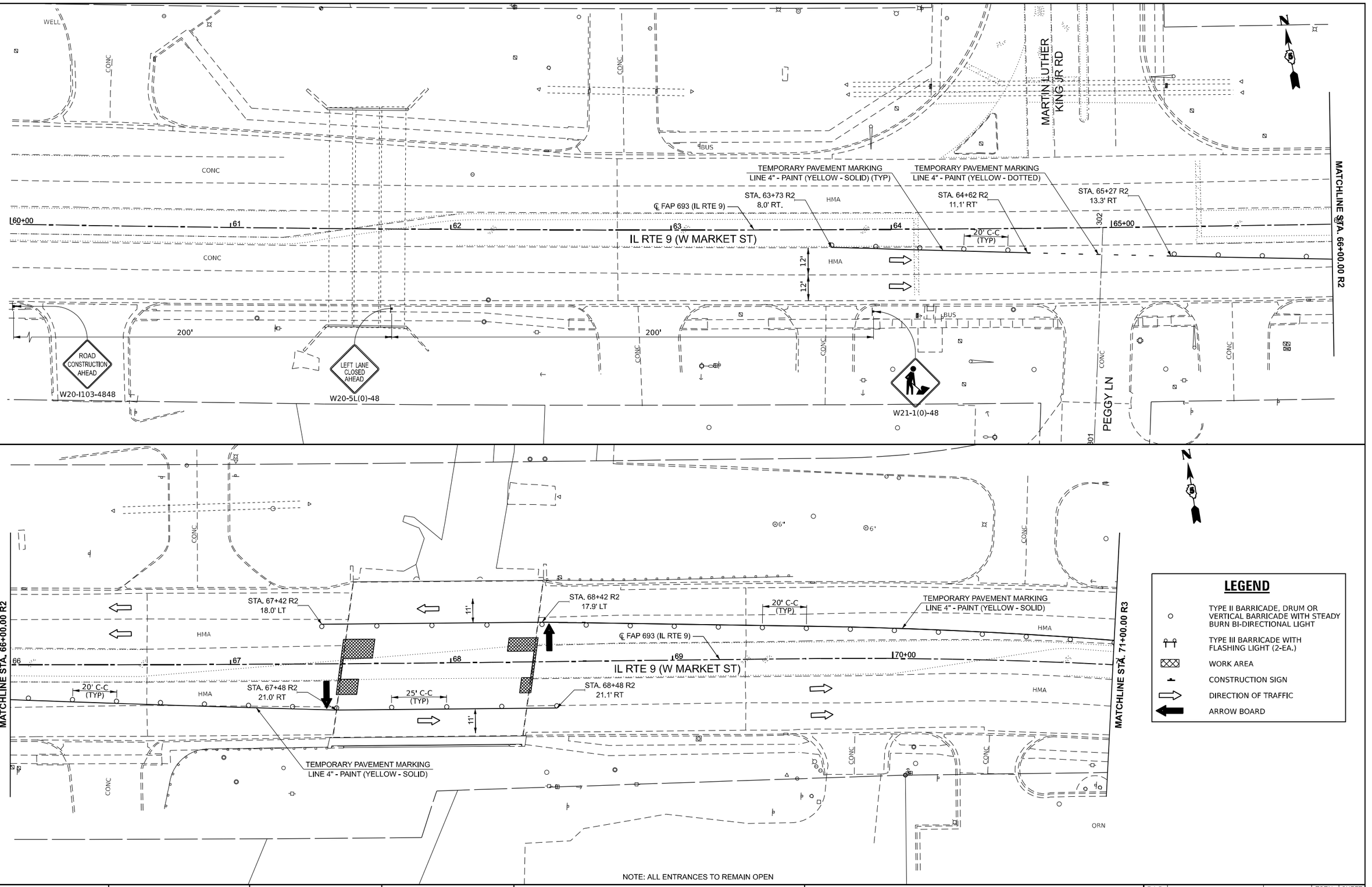

LEGEND

- TYPE II BARRICADE, DRUM OR VERTICAL BARRICADE WITH STEADY BURN BI-DIRECTIONAL LIGHT
- TYPE III BARRICADE WITH FLASHING LIGHT (2-EA.)
- WORK AREA
- CONSTRUCTION SIGN
- DIRECTION OF TRAFFIC
- ARROW BOARD

NOTE: ALL ENTRANCES TO REMAIN OPEN

MODEL: IL_3_1 - Plan 5 [Sheet]
FILE NAME: V:\v216 - IL 9 Bloomington\CADD\CADD Sheets\D570855-sht-staging1.dgn

Hutchison Engineering, Inc.

USER NAME = BDeCraene	DESIGNED -	REVISED -
	DRAWN -	REVISED -
PLOT SCALE = 0.16666633 ' / in.	CHECKED -	REVISED -
PLOT DATE = 10/17/2023	DATE -	REVISED -

STATE OF ILLINOIS
DEPARTMENT OF TRANSPORTATION

FAP 693 (IL RTE 9)
STAGE 1 CONSTRUCTION & TRAFFIC CONTROL PLAN

SCALE: 1"=20' | SHEET 1 OF 2 SHEETS | STA. 60+00 R2 TO STA. 71+00 R3

F.A.P. RTE.	SECTION	COUNTY	TOTAL SHEETS	SHEET NO.
693	(129)RS-4	McLEAN	218	148
		CONTRACT NO. 70855		
	ILLINOIS FED. AID PROJECT			

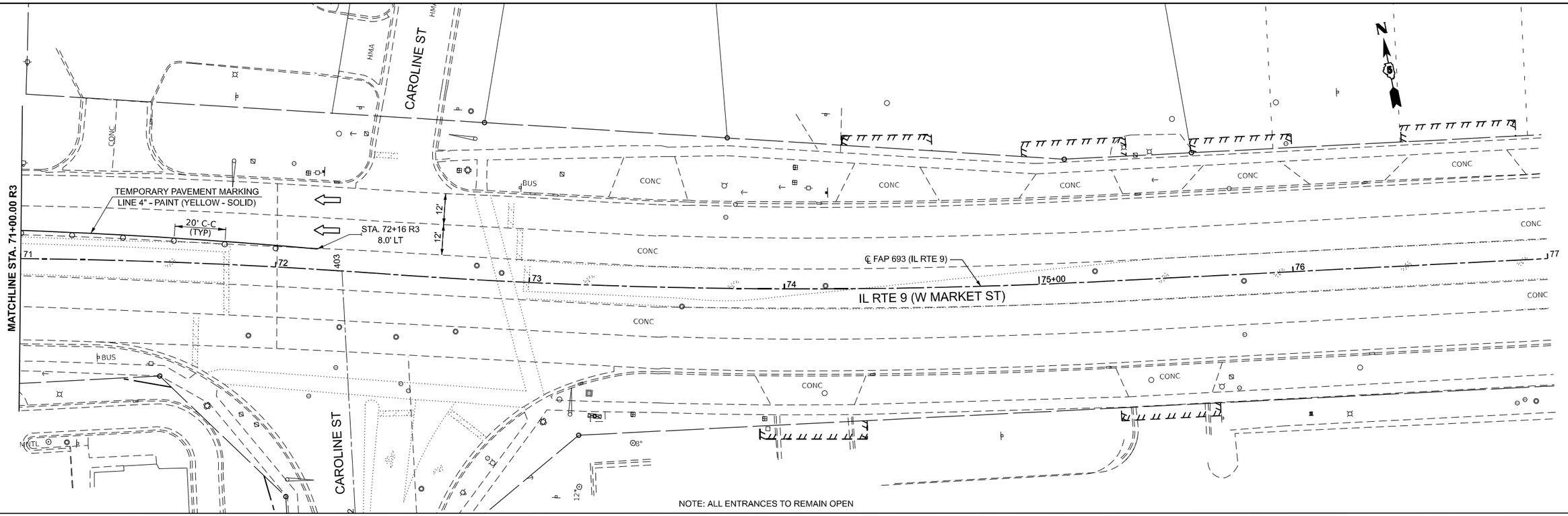

NOTE: ALL ENTRANCES TO REMAIN OPEN

LEGEND

○	TYPE II BARRICADE, DRUM OR VERTICAL BARRICADE WITH STEADY BURN BI-DIRECTIONAL LIGHT
	TYPE III BARRICADE WITH FLASHING LIGHT (2-EA.)
	WORK AREA
	CONSTRUCTION SIGN
	DIRECTION OF TRAFFIC
	ARROW BOARD

MODEL: IL_3_1 - Plan 1 [Sheet]
FILE NAME: V:\4216 - IL 9 Bloomington\CADD\CADD Sheets\D570855-sht-staging1.dgn

Hutchison Engineering, Inc.

USER NAME = BDeCraene	DESIGNED -	REVISED -
	DRAWN -	REVISED -
PLOT SCALE = 0.16666633 ' / in.	CHECKED -	REVISED -
PLOT DATE = 10/17/2023	DATE -	REVISED -

STATE OF ILLINOIS
DEPARTMENT OF TRANSPORTATION

FAP 693 (IL RTE 9)
STAGE 1 CONSTRUCTION & TRAFFIC CONTROL PLAN

SCALE: 1"=20' | SHEET 2 OF 2 SHEETS | STA. 71+00 R3 | TO STA. 82+00 R5

F.A.P. RTE.	SECTION	COUNTY	TOTAL SHEETS	SHEET NO.
693	(129)RS-4	McLEAN	218	149
		CONTRACT NO. 70855		
	ILLINOIS	FED. AID PROJECT		

STAGE 2 CONSTRUCTION

INSTALL TRAFFIC CONTROL SIGNING, DEVICES, AND TEMPORARY PAVEMENT MARKING.

FULL DEPTH REMOVAL AND REPLACEMENT OF HATCH BLOCK FOR THE SOUTHERN PORTION OF EXISTING STRUCTURE NO. 057-0190.

REMOVAL AND REPLACEMENT OF 5" CONCRETE WEARING SURFACE FOR THE SOUTHERN PORTION OF EXISTING STRUCTURE NO. 057-0190.

TRAFFIC CONTROL AND PROTECTION

TRAFFIC CONTROL AND PROTECTION SHALL BE PERFORMED IN ACCORDANCE WITH THE TRAFFIC CONTROL PLAN, SECTION 701 OF THE STANDARD SPECIFICATIONS, AND HIGHWAY STANDARD 701602-10.

TWO-WAY TRAFFIC SHALL BE ACCOMMODATED AT ALL TIMES ON MARKET ST, EXCEPT DURING ISOLATED FLAGGER CONTROLLED LANE CLOSURES.

FLAGGER CONTROLLED LANE CLOSURES SHOULD BE PLANNED TO AVOID LANE CLOSURES DURING THE AM AND PM PEAK HOURS.

EXISTING TRAFFIC CONTROL SIGNS AND DEVICES WILL BE REMOVED OR BRACED BY THE CONTRACTOR AFTER THE PROPOSED TRAFFIC CONTROL REQUIREMENTS ARE MET, OR AS AUTHORIZED BY THE ENGINEER. SIGNS OR DEVICES LEFT IN PLACE AT THIS TIME ARE TO BE PROTECTED FROM DAMAGE BY THE CONTRACTOR.

THE CONTRACTOR SHALL SCHEDULE OPERATIONS TO ENSURE THAT NO DROP-OFF OF GREATER THAN 12" WITHIN 8' OF THE TRAVEL LANE IS PRESENT DURING NON-WORKING HOURS.

THE FOLLOWING TRAFFIC CONTROL STANDARDS ARE THE MINIMUM REQUIREMENTS FOR THE TRAFFIC FOR THIS PROJECT: 701501, 701602, 701701, 701801, AND 701901.

THE CONTRACTOR MUST MAINTAIN ACCESS TO ALL PROPERTIES AND ENTRANCES AT ALL TIMES.

PORTABLE CHANGEABLE MESSAGE SIGNS SHALL BE PLACED AND APPROVED BY THE ENGINEER. THE MESSAGES SHALL BE PROVIDED BY THE ENGINEER AND SHALL BE IN PLACE 7 DAYS PRIOR TO A STAGE CHANGE. THIS WORK SHALL BE PAID FOR AS "CHANGEABLE MESSAGE SIGN" PER CALENDAR DAY.

DEPICTED TRAFFIC CONTROL IS A MINIMUM REQUIREMENT AND OTHER WORK OR SIGNING MAY BE REQUIRED AS PER THE INSTRUCTION OF THE ENGINEER. THE COST INCURRED TO COMPLY WILL BE INCLUDED IN THE PAY ITEM "TRAFFIC CONTROL AND PROTECTION (SPECIAL)."

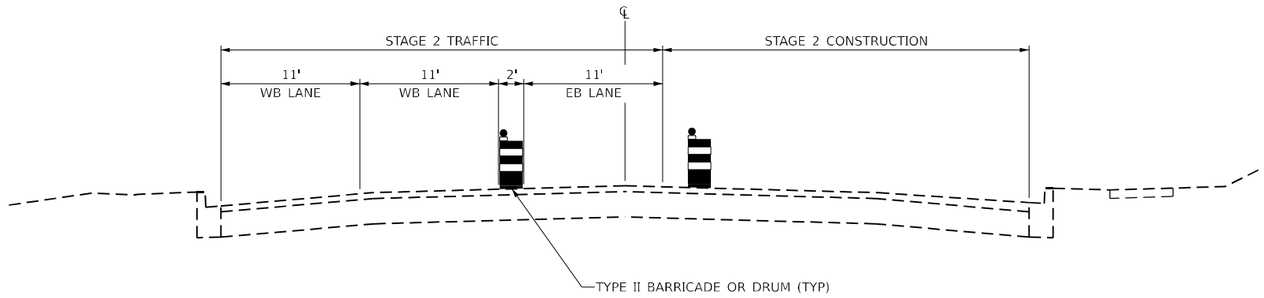

STAGE 2 TYPICAL SECTION

MARKET STREET

STA 60+67.98 TO STA 70+20.92

NOTES:

1. SEE STAGE 2 CONSTRUCTION AND TRAFFIC CONTROL PLANS FOR MORE INFORMATION.
2. SEE STRUCTURAL PLANS FOR MORE INFORMATION.

ORIGINAL SURVEY		BY	DATE
NOTE BOOK	SURVEYED		
NO.	PLOTTED		
	TEMPLATE		
	AREAS		
	AREAS CHECKED		

FINAL SURVEY		BY	DATE
NOTE BOOK	SURVEYED		
NO.	PLOTTED		
	TEMPLATE		
	AREAS		
	AREAS CHECKED		

MODEL: Stage 2 Typical
FILE NAME: V:\4216 - IL 9 Bloomington\CADD\CADD Sheets\D570855-sht-stagingtypicalts.dgn

Hutchison Engineering, Inc.

USER NAME = BDeCraene	DESIGNED -	REVISED -
	DRAWN -	REVISED -
PLOT SCALE = 0.16666633 ' / In.	CHECKED -	REVISED -
PLOT DATE = 10/17/2023	DATE -	REVISED -

STATE OF ILLINOIS
DEPARTMENT OF TRANSPORTATION

FAP 693 (IL RTE 9)
STAGE 2 CONSTRUCTION NOTES & TYPICAL SECTION

SCALE: N/A | SHEET 1 OF 1 SHEETS | STA. | TO STA.

F.A.P. RTE.	SECTION	COUNTY	TOTAL SHEETS	SHEET NO.
693	(129)RS-4	McLEAN	218	150
		CONTRACT NO. 70855		
	ILLINOIS	FED. AID PROJECT		

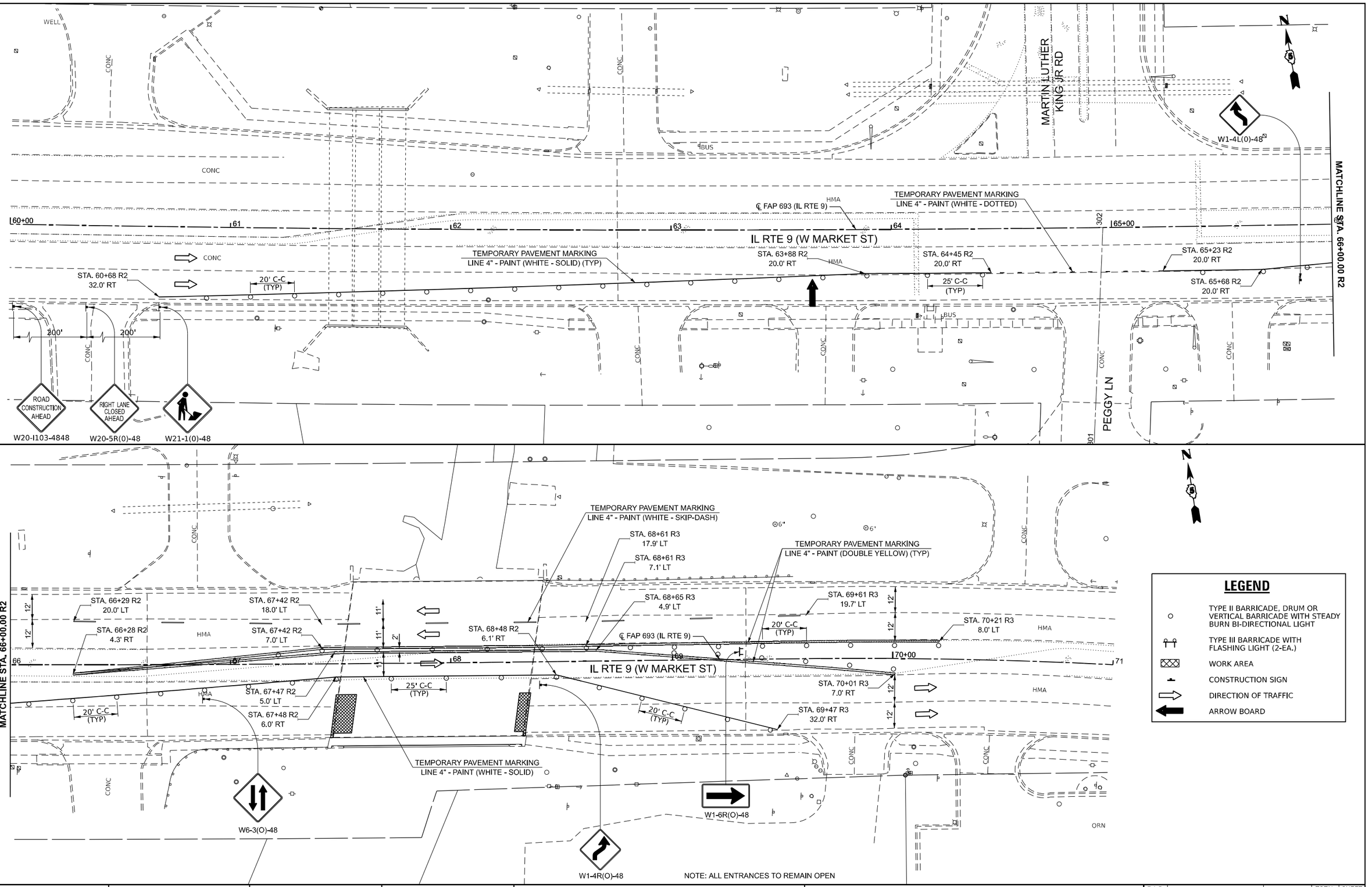

MODEL: IL_3_1 - Plan 5 [Sheet]
FILE NAME: V:\d216 - IL 9 Bloomington\CADD\CADD Sheets\D570855-sht+stage2.dgn

Hutchison Engineering, Inc.

USER NAME = BDeCraene	DESIGNED -	REVISED -	
	DRAWN -	REVISED -	
PLOT SCALE = 0.16666633 ' / in.	CHECKED -	REVISED -	
PLOT DATE = 10/17/2023	DATE -	REVISED -	

STATE OF ILLINOIS
DEPARTMENT OF TRANSPORTATION

FAP 693 (IL RTE 9)
STAGE 2 CONSTRUCTION & TRAFFIC CONTROL PLAN

SCALE: 1"=20' | SHEET 1 OF 1 SHEETS | STA. 60+00 R2 TO STA. 71+00 R3

F.A.P. RTE.	SECTION	COUNTY	TOTAL SHEETS	SHEET NO.
693	(129)RS-4	McLEAN	218	151
		CONTRACT NO. 70855		
	ILLINOIS FED. AID PROJECT			

STAGE 3 CONSTRUCTION

INSTALL TRAFFIC CONTROL SIGNING, DEVICES, AND TEMPORARY PAVEMENT MARKING.

FULL DEPTH REMOVAL AND REPLACEMENT OF HATCH BLOCK FOR THE NORTHERN PORTION OF EXISTING STRUCTURE NO. 057-0190.

REMOVAL AND REPLACEMENT OF 5" CONCRETE WEARING SURFACE FOR THE NORTHERN PORTION OF EXISTING STRUCTURE NO. 057-0190.

CONSTRUCT NEW SIDEWALK WITH BARRIER AND RAILING FOR THE NORTH SIDE OF EXISTING STRUCTURE NO. 057-0190.

TRAFFIC CONTROL AND PROTECTION

TRAFFIC CONTROL AND PROTECTION SHALL BE PERFORMED IN ACCORDANCE WITH THE TRAFFIC CONTROL PLAN, SECTION 701 OF THE STANDARD SPECIFICATIONS, AND HIGHWAY STANDARD 701602-10.

TWO-WAY TRAFFIC SHALL BE ACCOMMODATED AT ALL TIMES ON MARKET ST, EXCEPT DURING ISOLATED FLAGGER CONTROLLED LANE CLOSURES.

FLAGGER CONTROLLED LANE CLOSURES SHOULD BE PLANNED TO AVOID LANE CLOSURES DURING THE AM AND PM PEAK HOURS.

EXISTING TRAFFIC CONTROL SIGNS AND DEVICES WILL BE REMOVED OR BRACED BY THE CONTRACTOR AFTER THE PROPOSED TRAFFIC CONTROL REQUIREMENTS ARE MET, OR AS AUTHORIZED BY THE ENGINEER. SIGNS OR DEVICES LEFT IN PLACE AT THIS TIME ARE TO BE PROTECTED FROM DAMAGE BY THE CONTRACTOR.

THE CONTRACTOR SHALL SCHEDULE OPERATIONS TO ENSURE THAT NO DROP-OFF OF GREATER THAN 12" WITHIN 8' OF THE TRAVEL LANE IS PRESENT DURING NON-WORKING HOURS.

THE FOLLOWING TRAFFIC CONTROL STANDARDS ARE THE MINIMUM REQUIREMENTS FOR THE TRAFFIC FOR THIS PROJECT: 701501, 701602, 701701, 701801, AND 701901.

THE CONTRACTOR MUST MAINTAIN ACCESS TO ALL PROPERTIES AND ENTRANCES AT ALL TIMES.

PORTABLE CHANGEABLE MESSAGE SIGNS SHALL BE PLACED AND APPROVED BY THE ENGINEER. THE MESSAGES SHALL BE PROVIDED BY THE ENGINEER AND SHALL BE IN PLACE 7 DAYS PRIOR TO A STAGE CHANGE. THIS WORK SHALL BE PAID FOR AS "CHANGEABLE MESSAGE SIGN" PER CALENDAR DAY.

DEPICTED TRAFFIC CONTROL IS A MINIMUM REQUIREMENT AND OTHER WORK OR SIGNING MAY BE REQUIRED AS PER THE INSTRUCTION OF THE ENGINEER. THE COST INCURRED TO COMPLY WILL BE INCLUDED IN THE PAY ITEM "TRAFFIC CONTROL AND PROTECTION (SPECIAL)."

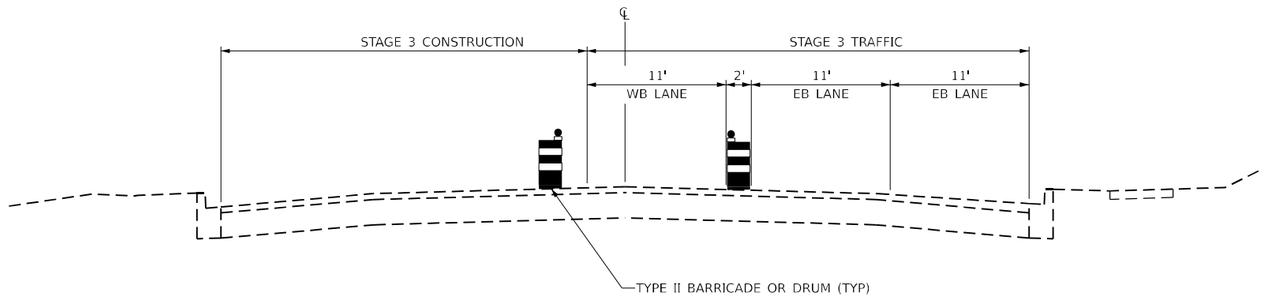

STAGE 3 TYPICAL SECTION
MARKET STREET
STA 66+41.58 TO STA 77+06.95

NOTES:

1. SEE STAGE 3 CONSTRUCTION AND TRAFFIC CONTROL PLANS FOR MORE INFORMATION.
2. SEE STRUCTURAL PLANS FOR MORE INFORMATION.

FINAL SURVEY		BY	DATE
NOTE BOOK	SURVEYED		
NO.	PLOTTED		
	TEMPLATE		
	AREAS		
	AREAS CHECKED		

ORIGINAL SURVEY		BY	DATE
NOTE BOOK	SURVEYED		
NO.	PLOTTED		
	TEMPLATE		
	AREAS		
	AREAS CHECKED		

MODEL: Stage 3 Typical
FILE NAME: V:\4216 - IL 9 Bloomington\CADD\CADD Sheets\D570855-sht-staging-typicals.dgn

Hutchison Engineering, Inc.

USER NAME = BDeCraene	DESIGNED -	REVISED -	STATE OF ILLINOIS DEPARTMENT OF TRANSPORTATION
	DRAWN -	REVISED -	
PLOT SCALE = 0.16666633 ' / in.	CHECKED -	REVISED -	
PLOT DATE = 10/17/2023	DATE -	REVISED -	

FAP 693 (IL RTE 9)
STAGE 3 CONSTRUCTION NOTES & TYPICAL SECTION

SCALE: N/A | SHEET 1 OF 1 SHEETS | STA. | TO STA.

F.A.P. RTE.	SECTION	COUNTY	TOTAL SHEETS	SHEET NO.
693	(129,109)RS3(16,4.1)CS(10FR)RS	McLEAN	218	152

CONTRACT NO. 70855

ILLINOIS | FED. AID PROJECT

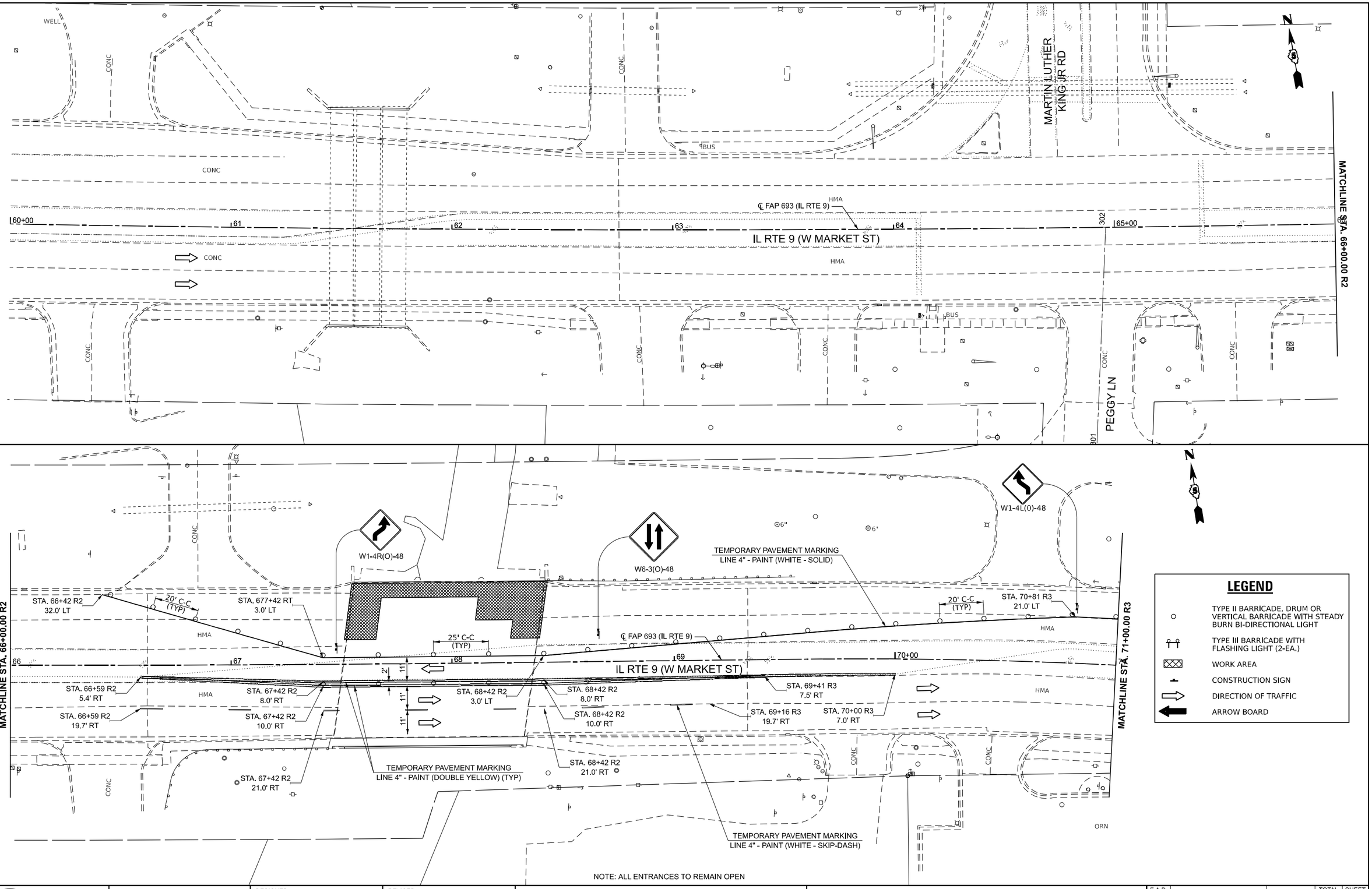

NOTE: ALL ENTRANCES TO REMAIN OPEN

MODEL: fl_o_1 - Plan 5 [Sheet]
FILE NAME: V:\4216 - IL 9 Bloomington\CADD\CADD Sheets\D570855-sht-staging3.dgn

Hutchison Engineering, Inc.

USER NAME = BDeCraene	DESIGNED -	REVISED -	
	DRAWN -	REVISED -	
PLOT SCALE = 0.16666633 ' / In.	CHECKED -	REVISED -	
PLOT DATE = 10/17/2023	DATE -	REVISED -	

STATE OF ILLINOIS
DEPARTMENT OF TRANSPORTATION

FAP 693 (IL RTE 9)
STAGE 3 CONSTRUCTION PLAN & TYPICAL SECTION

SCALE: 1"=20' | SHEET 1 OF 2 SHEETS | STA. 60+00 R2 TO STA. 71+00 R3

F.A.P. RTE.	SECTION	COUNTY	TOTAL SHEETS	SHEET NO.
693	(129)RS-4	McLEAN	218	153
		CONTRACT NO. 70855		
	ILLINOIS FED. AID PROJECT			

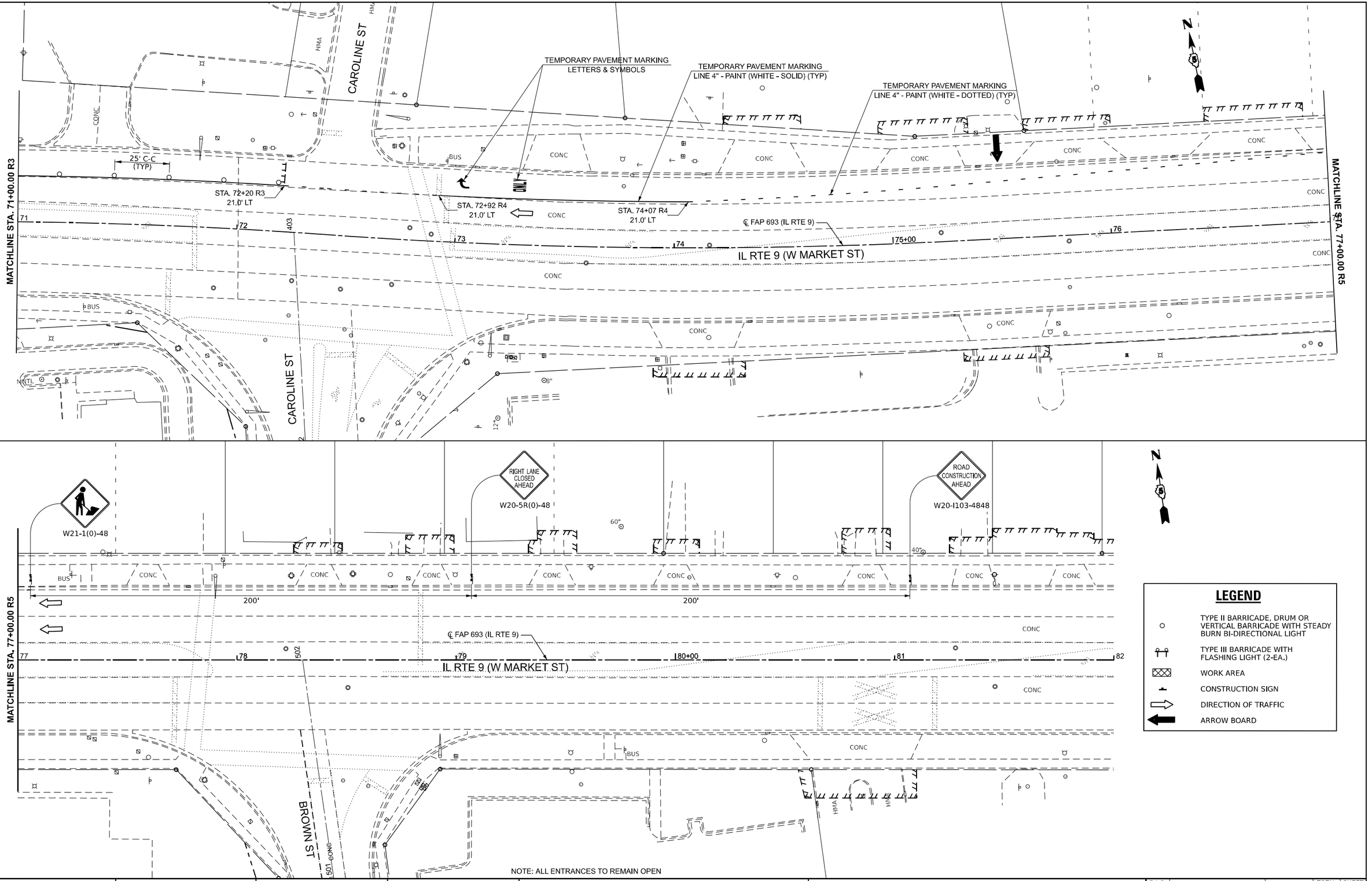

NOTE: ALL ENTRANCES TO REMAIN OPEN

MODEL: IL_D_1 - Plan 7 [Sheet]
FILE NAME: V:\4216 - IL 9 Bloomington\CADD\CADD Sheets\D570855-ph1staging3.dgn

Hutchison Engineering, Inc.

USER NAME = BDeCraene	DESIGNED -	REVISED -
	DRAWN -	REVISED -
PLOT SCALE = 0.16666633 ' / In.	CHECKED -	REVISED -
PLOT DATE = 10/17/2023	DATE -	REVISED -

STATE OF ILLINOIS
DEPARTMENT OF TRANSPORTATION

FAP 693 (IL RTE 9)
STAGE 3 CONSTRUCTION PLAN & TYPICAL SECTION

SCALE: 1"=20' | SHEET 2 OF 2 SHEETS | STA. 71+00 R3 TO STA. 82+00 R5

F.A.P. RTE.	SECTION	COUNTY	TOTAL SHEETS	SHEET NO.
693	(129)RS-4	McLEAN	218	154
		CONTRACT NO. 70855		
	ILLINOIS	FED. AID PROJECT		

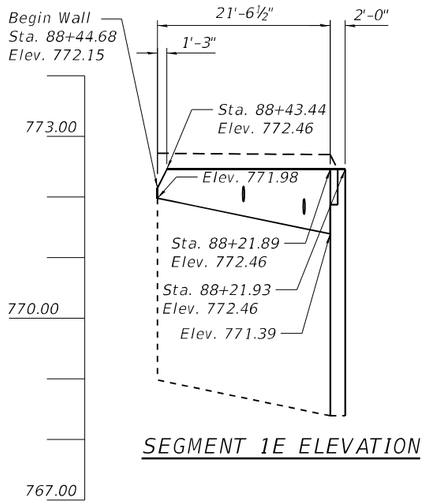

SEGMENT 1E ELEVATION

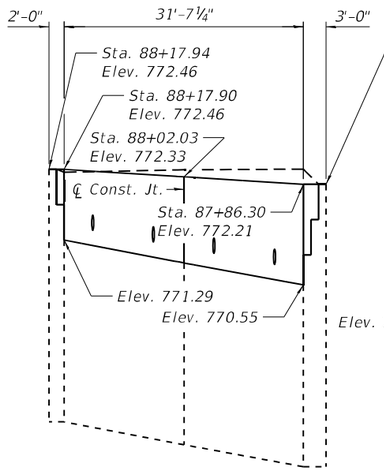

SEGMENT 1D ELEVATION

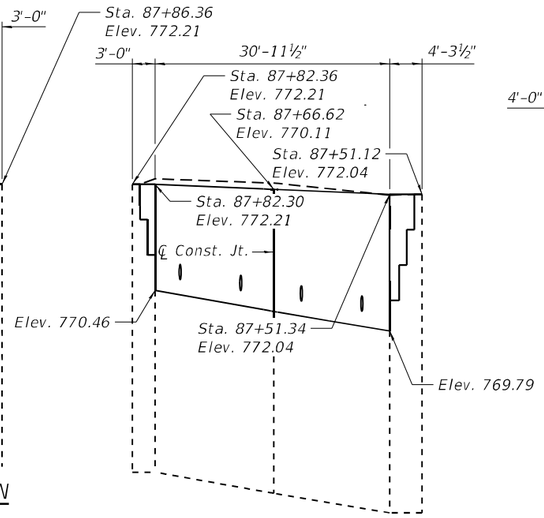

SEGMENT 1C ELEVATION

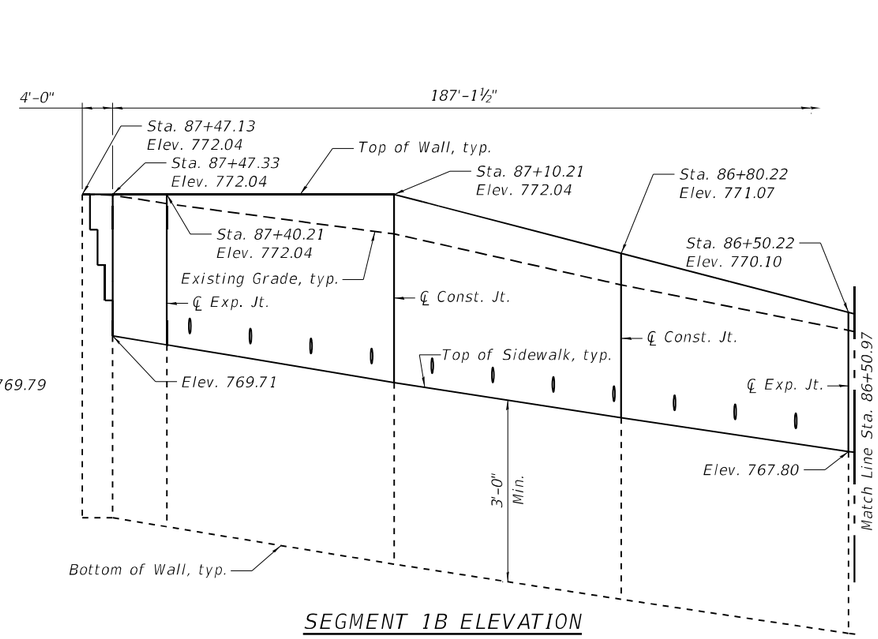

SEGMENT 1B ELEVATION

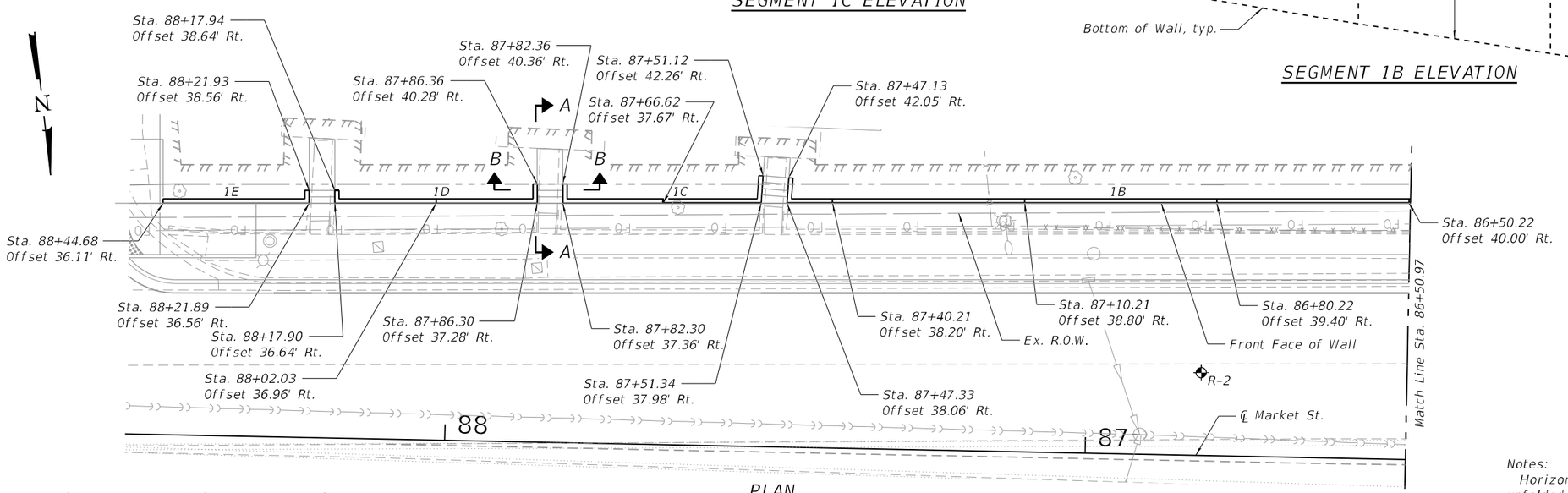

PLAN

N

Boring

LEGEND

- Boring
- Ex. Lightpole
- Ex. Manhole
- Ex. Power Pole
- Ex. Sanitary Sewer
- Ex. Sign
- Ex. Storm Sewer
- Pr. Inlet
- Pr. Storm Sewer
- Drainage Tile
- Ex. Fence

Notes:
Horizontal dimensions measured along front face of wall unfolded, looking at front of wall.
All offsets measured to front face of retaining wall.

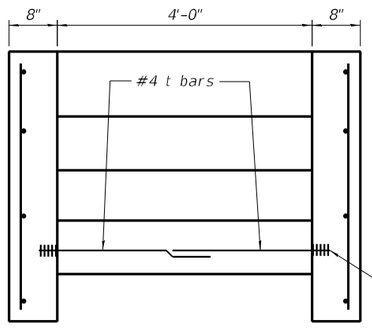

SECTION B-B

DESIGN STRESSES

FIELD UNITS
f'c = 3,500 psi
fy = 60,000 psi

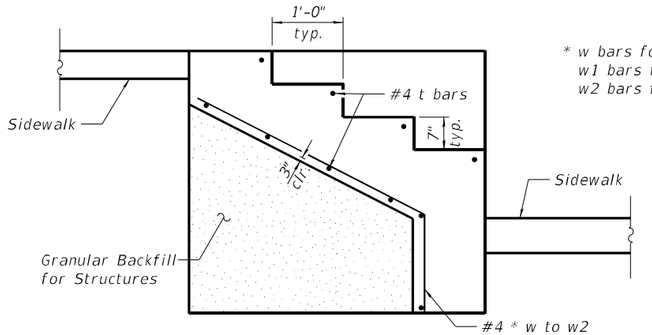

SECTION A-A

* w bars for 4-step stairs.
w1 bars for 3-step stairs.
w2 bars for 2-step stairs.

TOTAL BILL OF MATERIAL

ITEM	UNIT	TOTAL
Concrete Structures (Retaining Wall)	Cu. Yd.	42.3
Reinforcement Bars	Pound	2,480
Structure Excavation	Cu. Yd.	74
Granular Backfill for Structures	Cu. Yd.	49
Geocomposite Wall Drain	Sq. Yd.	53
Concrete Retaining Wall Removal	Foot	333
Pipe Handrail (Special)	Foot	5
Concrete Step Removal	Each	3
Concrete Steps	Cu. Yd.	2.0

MODEL: Default
FILE NAME: E:\1713\Struct\70855 Walls\CADD\CADD_Sheets\70855-wall01-sht01.dgn
10/12/2023 5:43:49 PM

LIN ENGINEERING, LTD.
Consulting Engineers
Springfield, Illinois

USER NAME =	DESIGNED - CL	REVISED -	
	CHECKED - CZ	REVISED -	
PLOT SCALE =	DRAWN - AJF	REVISED -	
PLOT DATE = 10/12/2023	CHECKED - CZ	REVISED -	

STATE OF ILLINOIS
DEPARTMENT OF TRANSPORTATION

PROPOSED RETAINING WALL
RETAINING WALL NO. **1**
SHEET 1 OF 4 SHEETS

F.A.P. RTE.	SECTION	COUNTY	TOTAL SHEETS	SHEET NO.
693	(129)RS-4	MCLEAN	218	155
		CONTRACT NO. 70855		
	ILLINOIS FED. AID PROJECT			

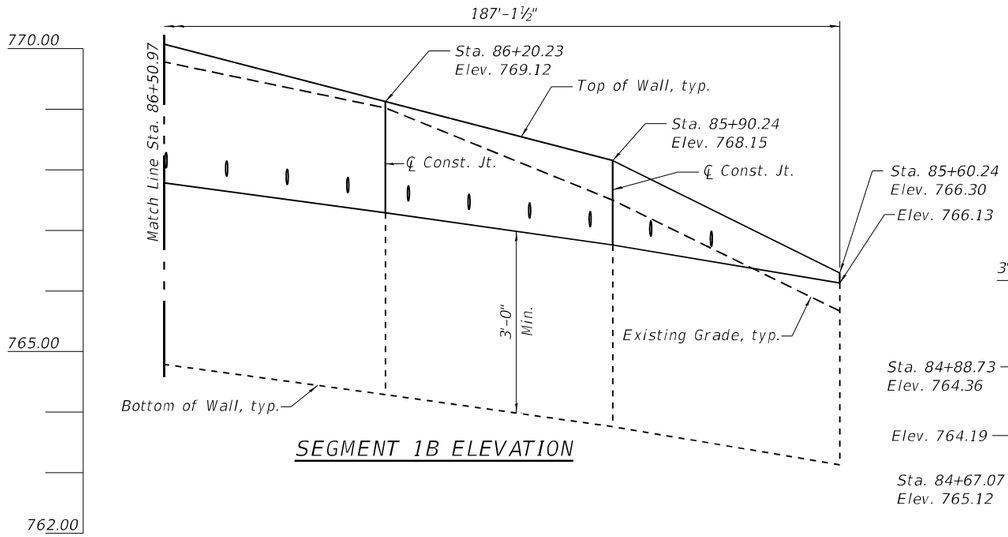

SEGMENT 1B ELEVATION

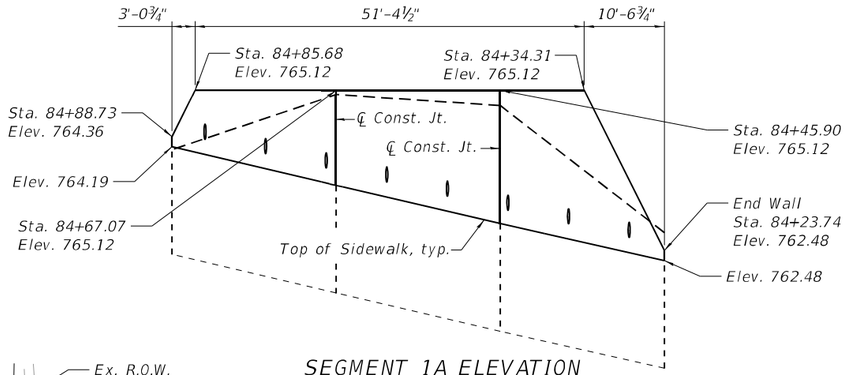

SEGMENT 1A ELEVATION

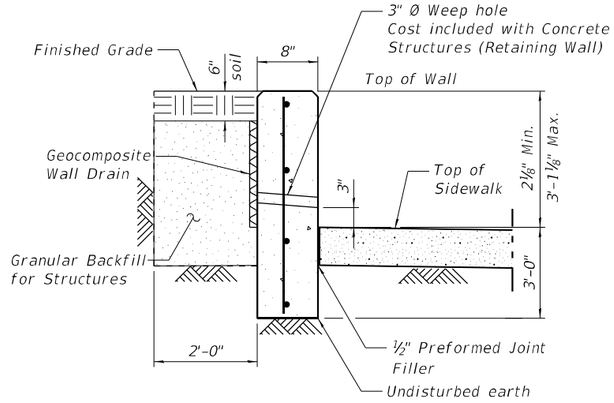

SECTION THRU WALL

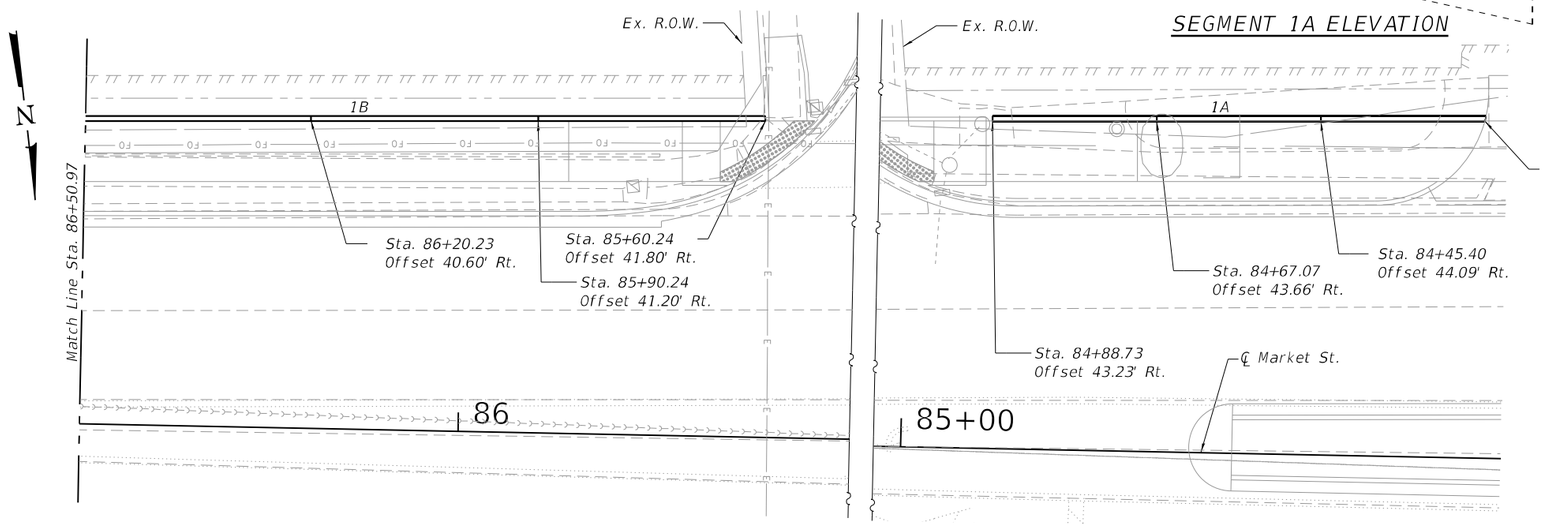

PLAN

LEGEND

- Boring
- Ex. Lightpole
- Ex. Manhole
- Ex. Power Pole
- Ex. Sanitary Sewer
- Ex. Sign
- Ex. Storm Sewer
- Pr. Inlet
- Pr. Storm Sewer
- Drainage Tile
- Ex. Fence

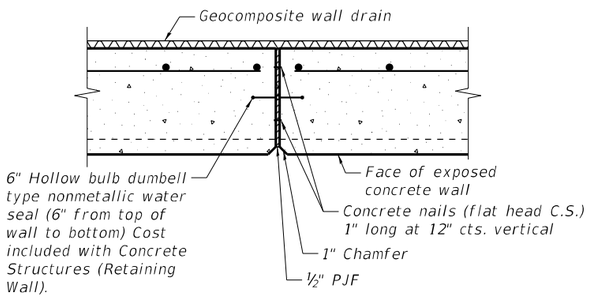

EXPANSION JOINT

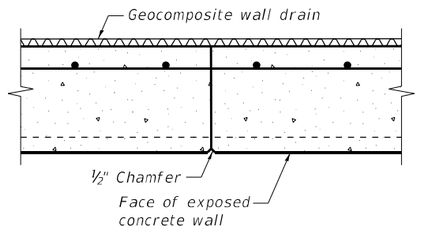

CONSTRUCTION JOINT

Notes:
Horizontal dimensions measured along front face of wall unfolded, looking at front of wall.
All offsets measured to front face of retaining wall.

MODEL: Default
FILE NAME: E:\1713\Struct\70855 Walls\CADD\CADD_Sheets\70855-wall01-sht02.dgn

10/12/2023 5:43:50 PM

LIN ENGINEERING,LTD. Consulting Engineers Springfield, Illinois	USER NAME =	DESIGNED - CL	REVISED -	STATE OF ILLINOIS DEPARTMENT OF TRANSPORTATION	PROPOSED RETAINING WALL RETAINING WALL NO. 1
		CHECKED - CZ	REVISED -		
	PLOT SCALE =	DRAWN - AJF	REVISED -		
	PLOT DATE = 10/12/2023	CHECKED - CZ	REVISED -		SHEET 2 OF 4 SHEETS

F.A.P. RTE.	SECTION	COUNTY	TOTAL SHEETS	SHEET NO.
693	(129)RS-4	MCLEAN	218	156
		CONTRACT NO. 70855		
	ILLINOIS	FED. AID PROJECT		

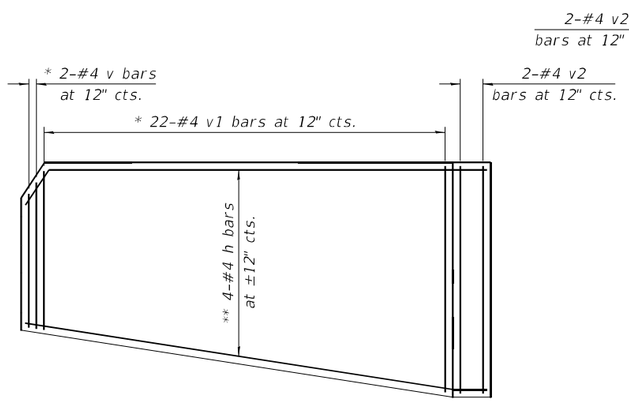

SEGMENT 1E ELEVATION

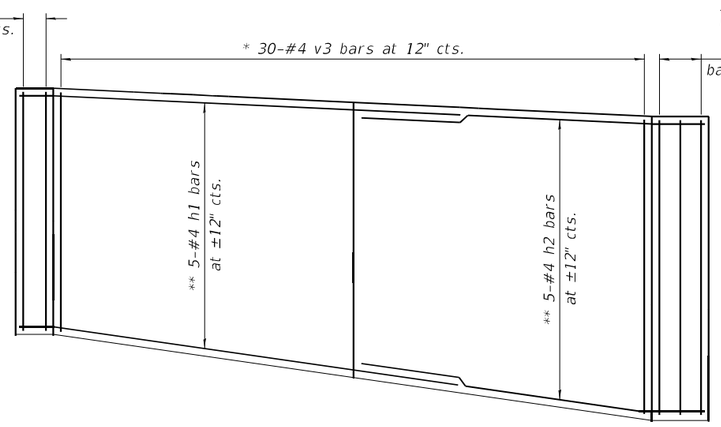

SEGMENT 1D ELEVATION

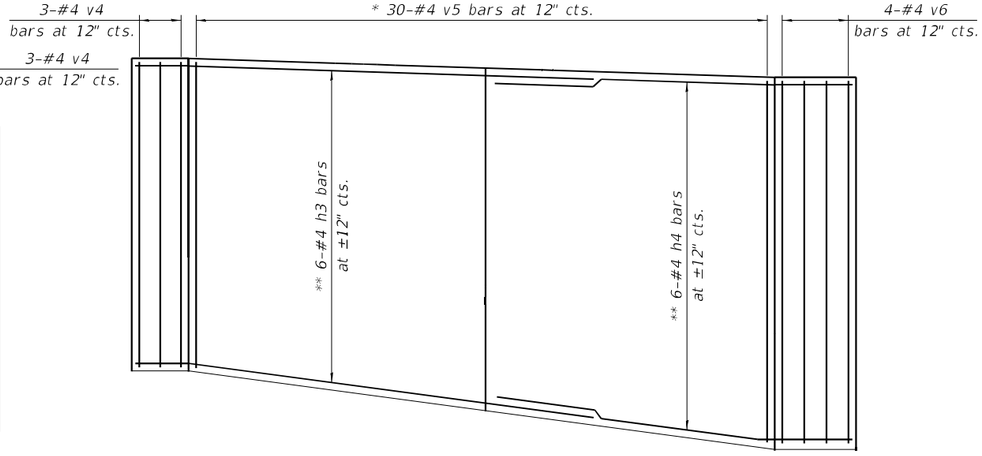

SEGMENT 1C ELEVATION

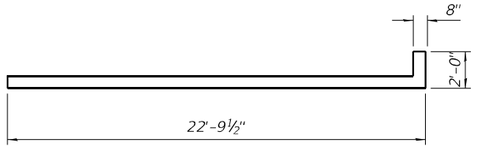

SEGMENT 1E PLAN

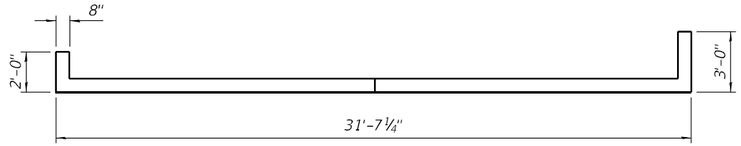

SEGMENT 1D PLAN

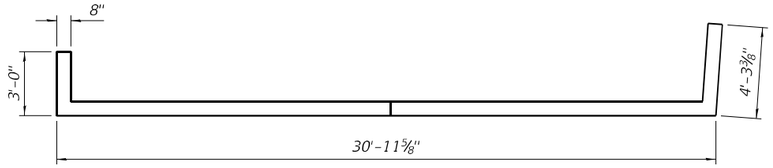

SEGMENT 1C PLAN

* See Cutting Diagram on sheet 4 of 4.
** Cut or bend as needed.

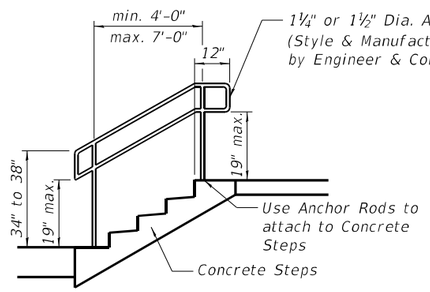

HANDRAIL FOR CONCRETE STEPS

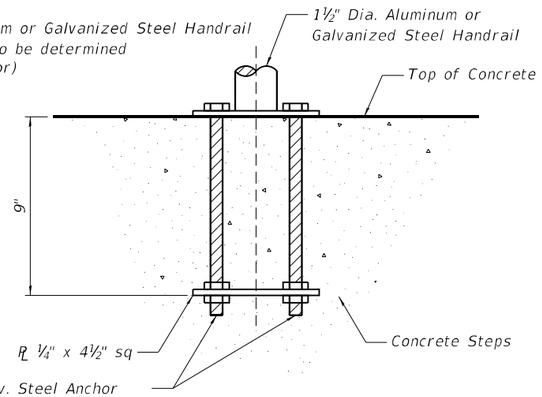

ANCHOR ROD DETAIL
(Included in the cost of Hand or Safety Rail)

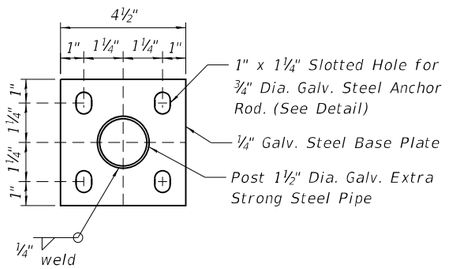

POST BASE PLATE DETAIL
(Included in the cost of Hand or Safety Rail)

Notes:

Stairways shall have continuous handrails one side of stairs.

Gripping surfaces shall be uninterrupted by construction elements or obstructions.

Ends of handrail shall be either rounded or returned smoothly to floor, wall, or post.

Hand & safety rails shall not rotate within their fittings.

The clear space between handrails and any wall shall be 1½".

Handrail shall conform to Section 509 with the exception that all pipe and connections shall be welded galvanized or aluminum according to Article 1006.30, or 1006.34.

The diameter of the gripping surface of the handrail shall be 1-¼" to 1-½".

This work shall be paid for at the contract unit price per FOOT for Pipe Handrail, special.

MODEL: Default
FILE NAME: E:\1713\Struct\70855 Walls\CADD\CADD_Sheets\70855-wall01-sht03.dgn

10/12/2023 5:43:51 PM

LIN ENGINEERING,LTD.
Consulting Engineers
Springfield, Illinois

USER NAME =		DESIGNED -	CL	REVISED -	
		CHECKED -	CZ	REVISED -	
PLOT SCALE =		DRAWN -	AJF	REVISED -	
PLOT DATE =	10/12/2023	CHECKED -	CZ	REVISED -	

STATE OF ILLINOIS
DEPARTMENT OF TRANSPORTATION

WALL PLAN AND ELEVATION
RETAINING WALL NO. **1**
SHEET 3 OF 4 SHEETS

F.A.P. RTE.	SECTION	COUNTY	TOTAL SHEETS	SHEET NO.
693	(129)RS-4	MCLEAN	218	157
		CONTRACT NO. 70855		
	ILLINOIS	FED. AID PROJECT		

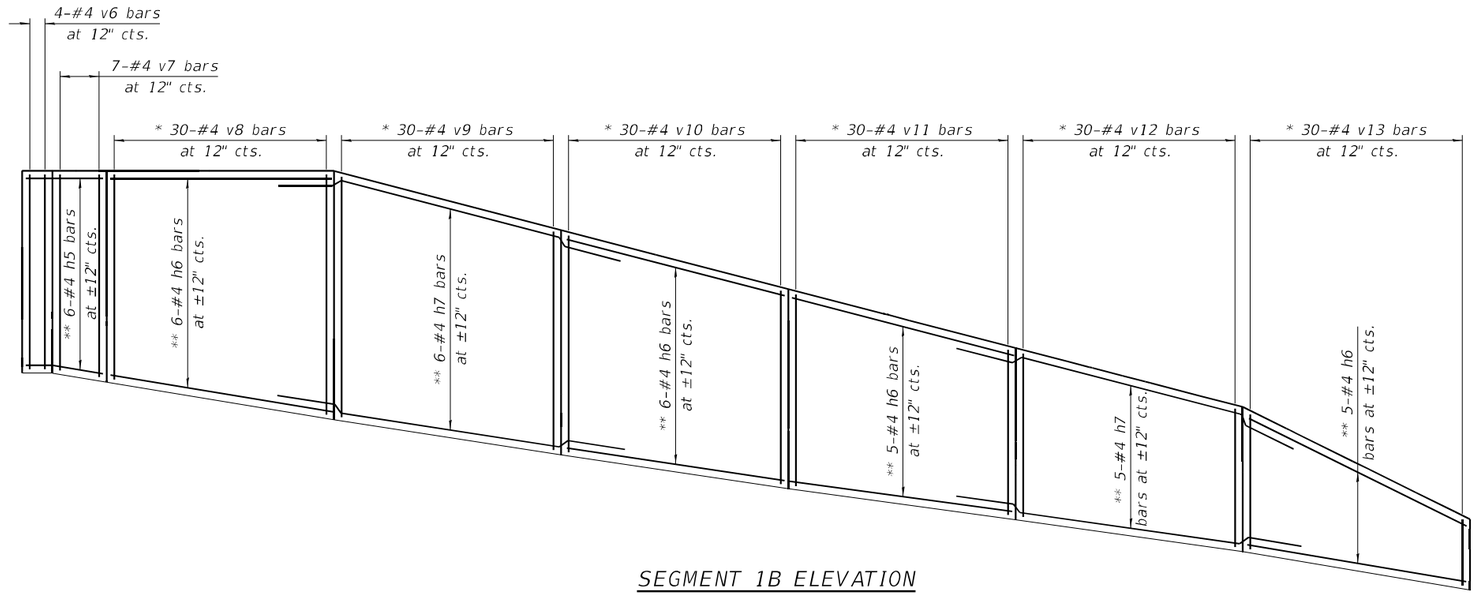

SEGMENT 1B ELEVATION

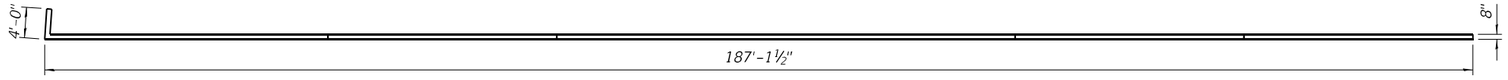

SEGMENT 1B PLAN

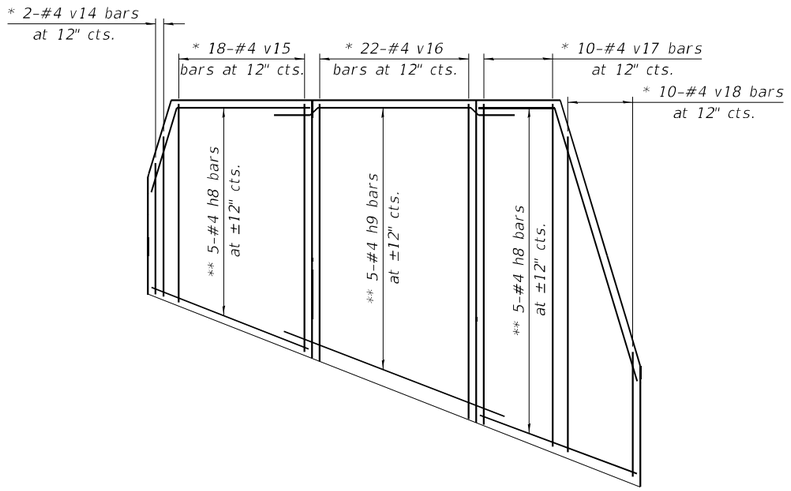

SEGMENT 1A ELEVATION

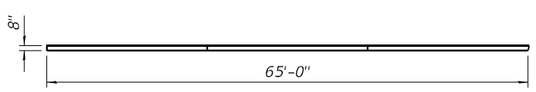

SEGMENT 1A PLAN

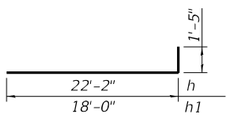

h & h1 BARS

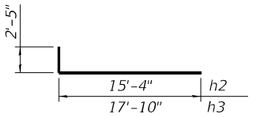

h2 & h3 BARS

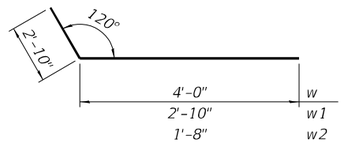

w, w1 & w2 BARS

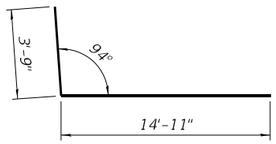

h4 BAR

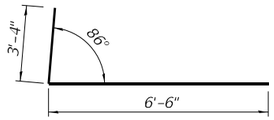

h5 BAR

* See Cutting Diagram on this sheet.
** Cut or bend as needed.

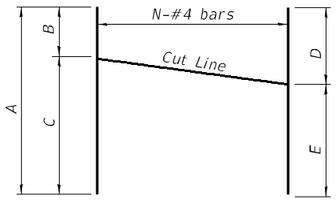

FIELD CUTTING DIAGRAM

Order full length bars and spaced at 12" cts. Cut as shown and use remainder of bars in the other half.

RETAINING WALL 1
BILL OF MATERIAL

Bar	No.	Size	Length	Shape
h	4	#4	23'-7"	
h1	5	#4	19'-5"	
h2	5	#4	17'-9"	
h3	6	#4	20'-3"	
h4	6	#4	18'-8"	
h5	6	#4	9'-10"	
h6	22	#4	29'-10"	
h7	11	#4	35'-2"	
h8	10	#4	21'-6"	
h9	5	#4	26'-10"	
v	1	#4	6'-0"	
v1	11	#4	6'-11"	
v2	4	#4	3'-9"	
v3	15	#4	8'-2"	
v4	6	#4	4'-4"	
v5	15	#4	9'-4"	
v6	8	#4	4'-8"	
v7	7	#4	5'-2"	
v8	15	#4	10'-11"	
v9	15	#4	11'-2"	
v10	15	#4	10'-4"	
v11	15	#4	9'-5"	
v12	15	#4	8'-7"	
v13	15	#4	6'-11"	
v14	1	#4	6'-6"	
v15	9	#4	7'-11"	
v16	11	#4	9'-1"	
v17	5	#4	10'-1"	
v18	5	#4	8'-0"	
t	24	#4	3'-8"	
w	4	#4	6'-10"	
w1	4	#4	5'-8"	
w2	4	#4	4'-6"	
Concrete Structure (Retaining Wall)			Cu. Yd.	42.3
Reinforcement Bars			Pound	2,480
Structure Excavation			Cu. Yd.	74
Granular Backfill for Structures			Cu. Yd.	49
Geocomposite Wall Drain			Sq. Yd.	53
Pipe Handrail (Special)			Foot	5
Concrete Steps			Cu. Yd.	2.0

MINIMUM BAR LAP

#4 bar = 2'-7"

Bar	A	B	C	D	E	N
v	6'-0"	2'-11"	3'-1"	-	-	1
v1	6'-11"	3'-2"	3'-9"	3'-5"	3'-6"	11
v3	8'-2"	3'-10"	4'-4"	4'-1"	4'-1"	15
v5	9'-4"	4'-5"	4'-11"	4'-8"	4'-8"	15
v8	10'-11"	5'-2"	5'-9"	5'-5"	5'-6"	15
v9	11'-2"	5'-5"	5'-9"	5'-7"	5'-7"	15
v10	10'-4"	5'-0"	5'-4"	5'-2"	5'-2"	15
v11	9'-5"	4'-6"	4'-11"	4'-8"	4'-9"	15
v12	8'-7"	4'-1"	4'-6"	4'-3"	4'-4"	15
v13	6'-11"	2'-11"	4'-0"	3'-5"	3'-6"	15
v14	6'-6"	3'-1"	3'-5"	-	-	1
v15	7'-11"	3'-9"	4'-2"	3'-11"	4'-0"	9
v16	9'-1"	4'-3"	4'-10"	4'-6"	4'-7"	11
v17	10'-1"	4'-11"	5'-2"	5'-0"	5'-1"	5
v18	8'-0"	3'-0"	5'-0"	3'-11"	4'-1"	5

MODEL: Default
FILE NAME: E:\1713\Struct\70855 Walls\CADD\CADD_Sheets\70855-wall01-sht04.dgn

10/12/2023 5:43:51 PM

LIN ENGINEERING, LTD.
Consulting Engineers
Springfield, Illinois

USER NAME =	DESIGNED - CL	REVISED -	
	CHECKED - CZ	REVISED -	
PLOT SCALE =	DRAWN - AJF	REVISED -	
PLOT DATE = 10/12/2023	CHECKED - CZ	REVISED -	

STATE OF ILLINOIS
DEPARTMENT OF TRANSPORTATION

WALL PLAN AND ELEVATION
RETAINING WALL NO. **1**
SHEET 4 OF 4 SHEETS

F.A.P. RTE.	SECTION	COUNTY	TOTAL SHEETS	SHEET NO.
693	(129)RS-4	MCLEAN	218	158
		CONTRACT NO. 70855		
	ILLINOIS	FED. AID PROJECT		

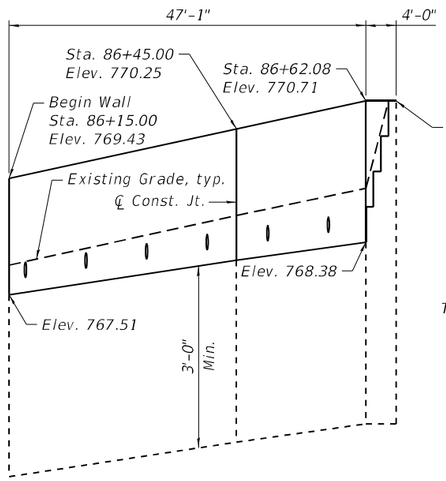

SEGMENT 2A ELEVATION

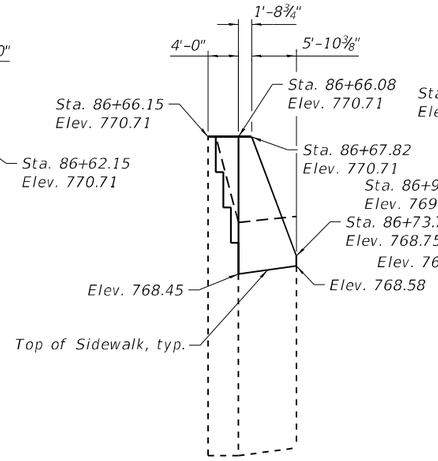

SEGMENT 2B ELEVATION

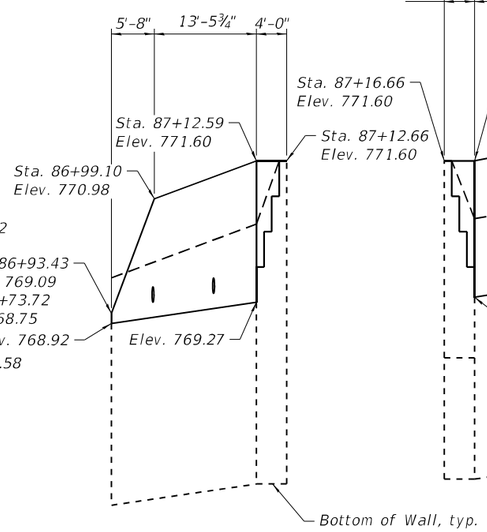

SEGMENT 2C ELEVATION

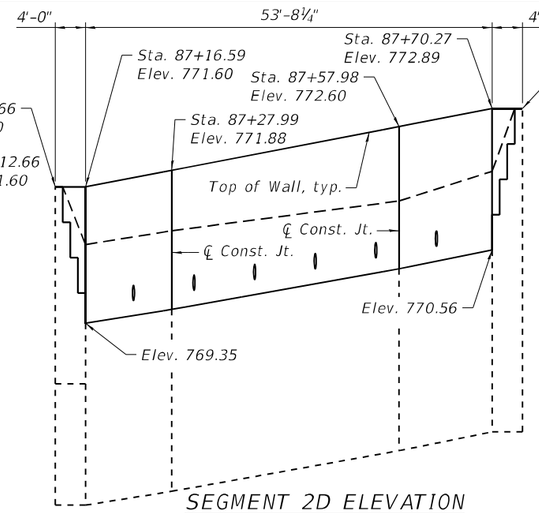

SEGMENT 2D ELEVATION

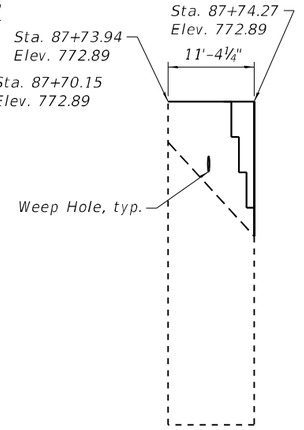

SEGMENT 2E ELEVATION

Notes:
Horizontal dimensions measured along front face of wall unfolded, looking at front of wall.
All offsets measured to front face of retaining wall.

TOTAL BILL OF MATERIAL

ITEM	UNIT	TOTAL
Concrete Structures (Retaining Wall)	Cu. Yd.	37.2
Reinforcement Bars	Pound	2,340
Structure Excavation	Cu. Yd.	51
Granular Backfill for Structures	Cu. Yd.	43
Geocomposite Wall Drain	Sq. Yd.	49
Pipe Handrail (Special)	Foot	23
Concrete Step Removal	Each	5
Concrete Steps	Cu. Yd.	3.9

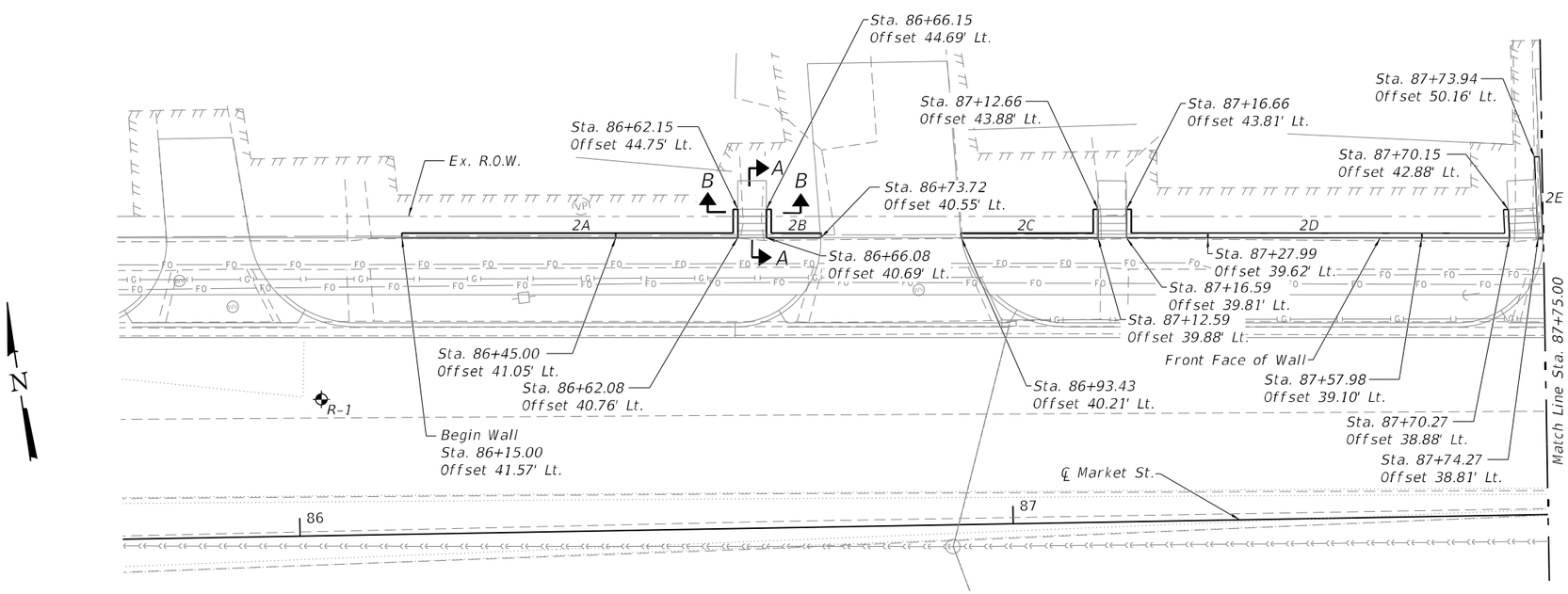

PLAN

DESIGN STRESSES

FIELD UNITS
f'c = 3,500 psi
fy = 60,000 psi

LEGEND

- Boring
- Ex. Lightpole
- Ex. Manhole
- Ex. Power Pole
- Ex. Sanitary Sewer
- Ex. Sign
- Ex. Storm Sewer
- Pr. Inlet
- Pr. Storm Sewer
- Drainage Tile
- Ex. Fence

LIN ENGINEERING, LTD.
Consulting Engineers
Springfield, Illinois

USER NAME =		DESIGNED - CL	REVISED -		
		CHECKED - CZ	REVISED -		
PLOT SCALE =		DRAWN - AJF	REVISED -		
PLOT DATE = 10/12/2023		CHECKED - CZ	REVISED -		

STATE OF ILLINOIS
DEPARTMENT OF TRANSPORTATION

PROPOSED RETAINING WALL
RETAINING WALL NO. **2**
SHEET 1 OF 6 SHEETS

F.A.P. RTE.	SECTION	COUNTY	TOTAL SHEETS	SHEET NO.
693	(129)RS-4	MCLEAN	218	159
		CONTRACT NO. 70855		
	ILLINOIS	FED. AID PROJECT		

MODEL: Default
FILE NAME: E:\1713\Struct\70855 Walls\CADD\CADD_Sheets\70855-wall02-sht01.dgn
10/12/2023 5:43:53 PM

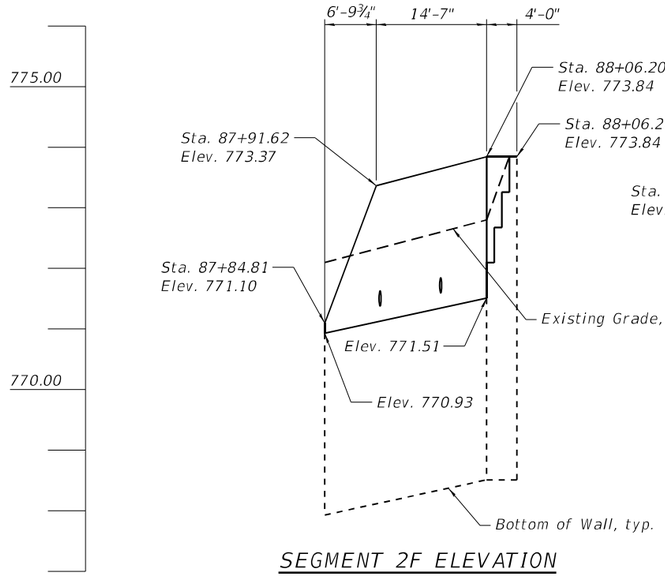

SEGMENT 2F ELEVATION

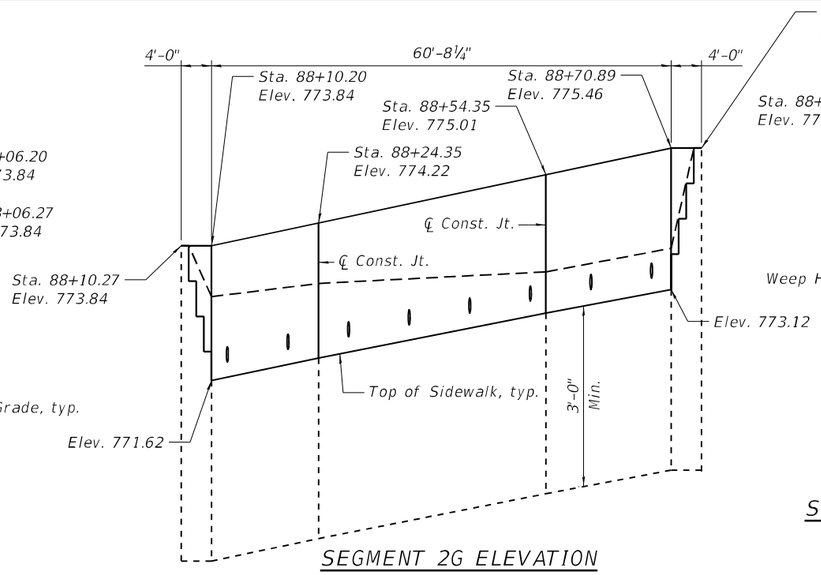

SEGMENT 2G ELEVATION

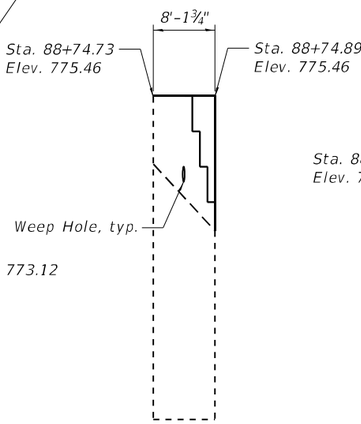

SEGMENT 2H ELEVATION

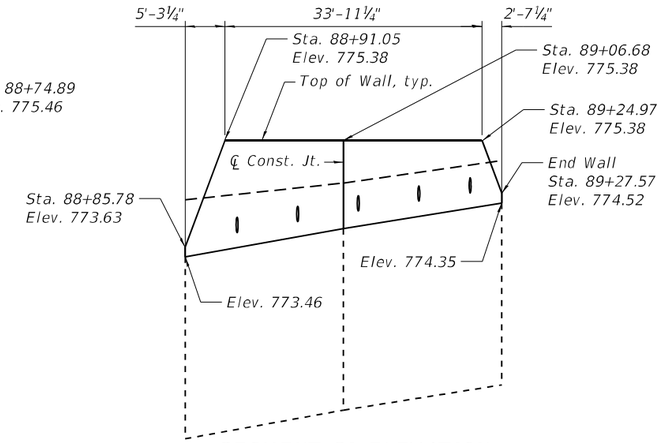

SEGMENT 2I ELEVATION

Notes:
Horizontal dimensions measured along front face of wall unfolded, looking at front of wall.
All offsets measured to front face of retaining wall.

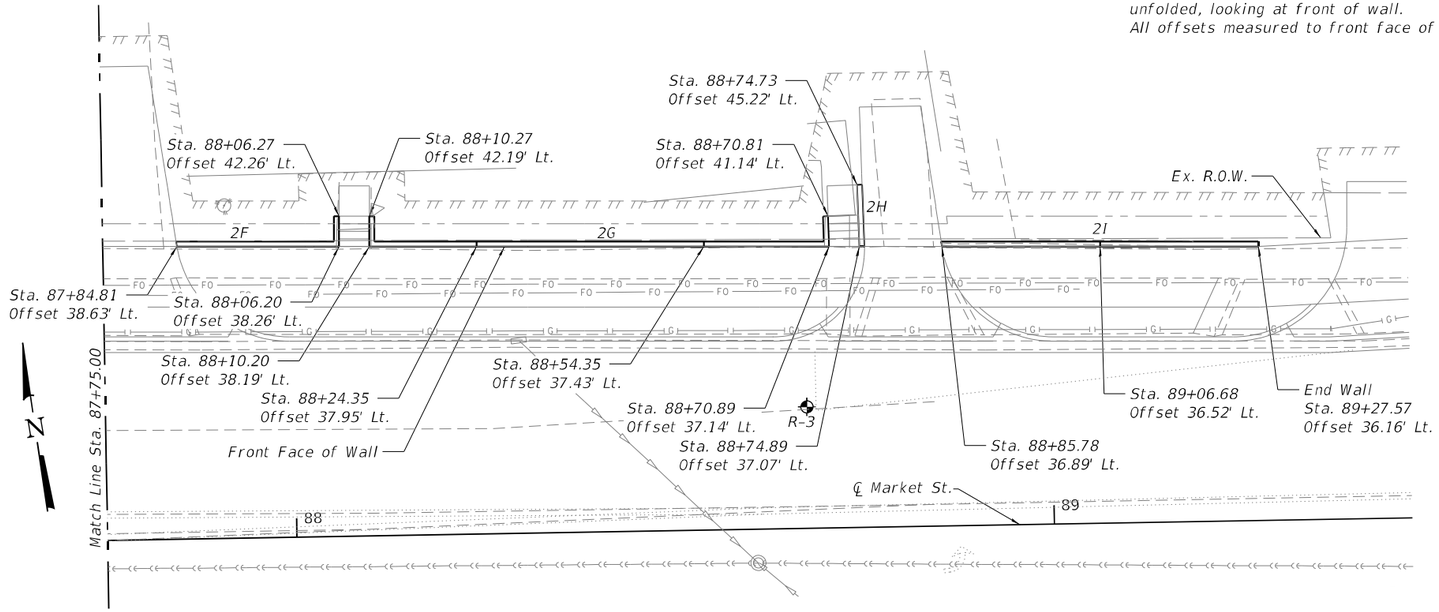

PLAN

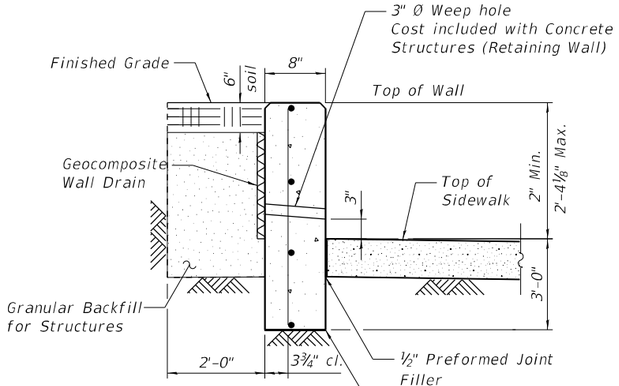

SECTION THRU WALL
(SEGMENT 2A, 2B, 2C, 2D, 2F, 2G and 2I)

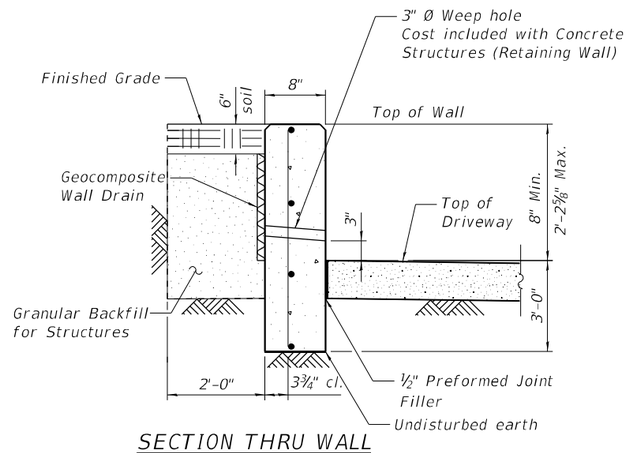

SECTION THRU WALL
(SEGMENT 2E and 2H)

LIN ENGINEERING, LTD. Consulting Engineers Springfield, Illinois	USER NAME =	DESIGNED - CL	REVISED -	STATE OF ILLINOIS DEPARTMENT OF TRANSPORTATION	PROPOSED RETAINING WALL RETAINING WALL NO. 2
		CHECKED - CZ	REVISED -		
	PLOT SCALE =	DRAWN - AJF	REVISED -		
	PLOT DATE = 10/12/2023	CHECKED - CZ	REVISED -		SHEET 2 OF 6 SHEETS

F.A.P. RTE.	SECTION	COUNTY	TOTAL SHEETS	SHEET NO.
693	(129)RS-4	MCLEAN	218	160
		CONTRACT NO. 70855		
		ILLINOIS	FED. AID PROJECT	

MODEL: Default
FILE NAME: E:\1713\Struct\70855 Walls\CADD\CADD_Sheets\70855-wall02-sht02.dgn
10/12/2023 5:43:54 PM

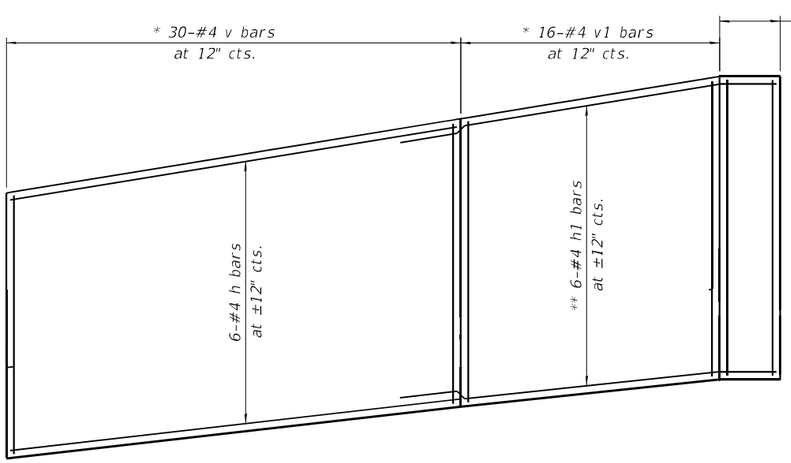

SEGMENT 2A ELEVATION

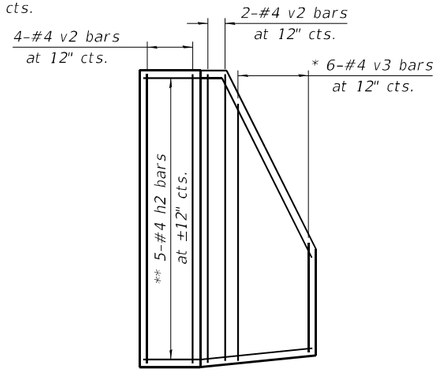

SEGMENT 2B ELEVATION

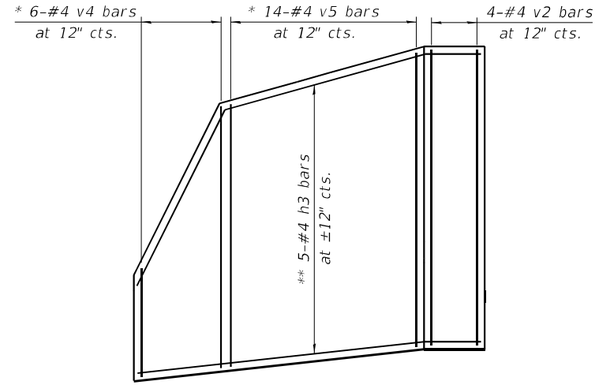

SEGMENT 2C ELEVATION

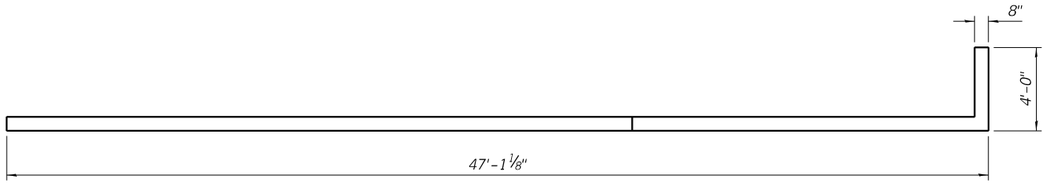

SEGMENT 2A PLAN

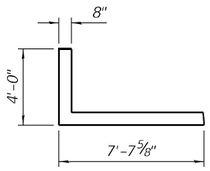

SEGMENT 2B PLAN

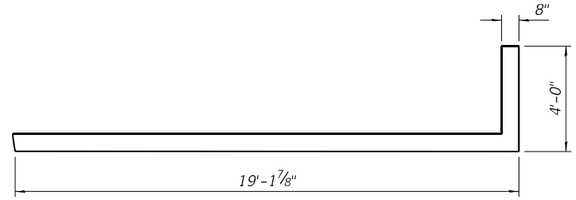

SEGMENT 2C PLAN

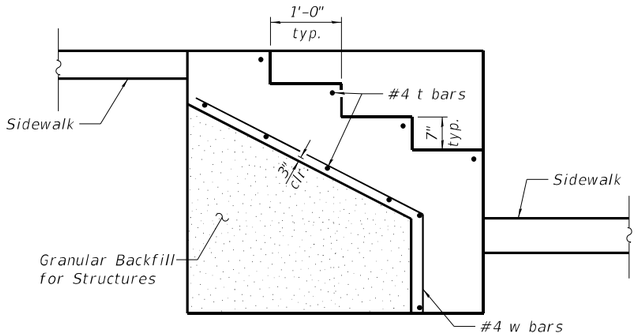

SECTION A-A

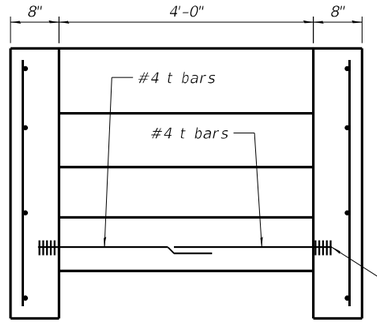

SECTION B-B

* See Cutting Diagram on sheet 6 of 6.
** Cut or bend as needed.

(Sheet 1 of 4)

MODEL: Default
FILE NAME: E:\1713\Struct\70855 Walls\CADD\CADD_Sheets\70855-wall02-sht03.dgn

10/12/2023 5:43:54 PM

LIN ENGINEERING, LTD. Consulting Engineers Springfield, Illinois	USER NAME =	DESIGNED - CL	REVISED -	STATE OF ILLINOIS DEPARTMENT OF TRANSPORTATION
		CHECKED - CZ	REVISED -	
	PLOT SCALE =	DRAWN - AJF	REVISED -	
	PLOT DATE = 10/12/2023	CHECKED - CZ	REVISED -	

WALL PLAN AND ELEVATION
RETAINING WALL NO. 2

SHEET 3 OF 6 SHEETS

F.A.P. RTE.	SECTION	COUNTY	TOTAL SHEETS	SHEET NO.
693	(129)RS-4	MCLEAN	218	161
		CONTRACT NO. 70855		
	ILLINOIS	FED. AID PROJECT		

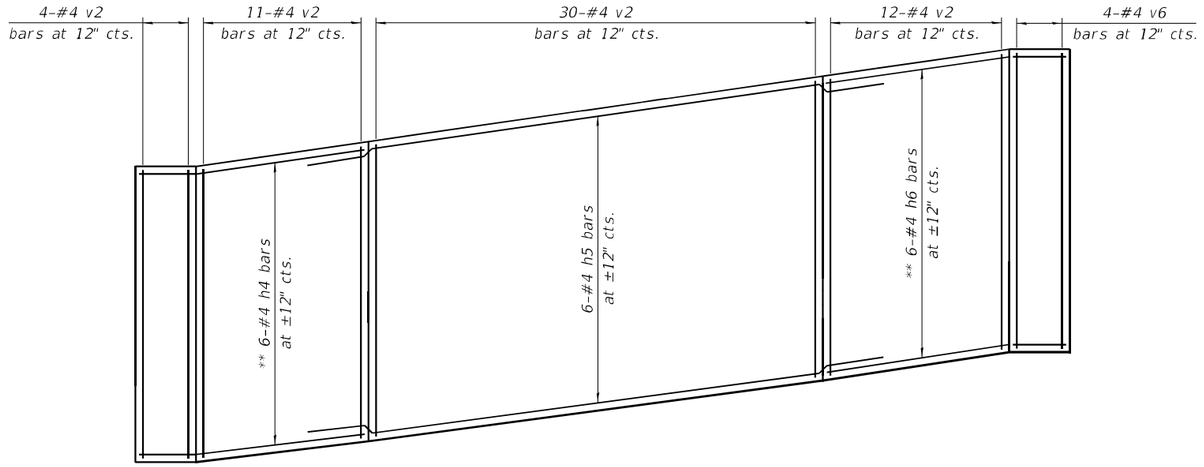

SEGMENT 2D ELEVATION

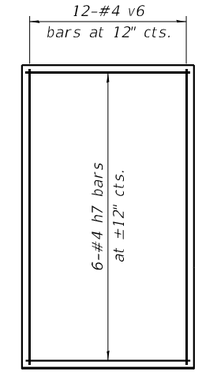

SEGMENT 2E ELEVATION

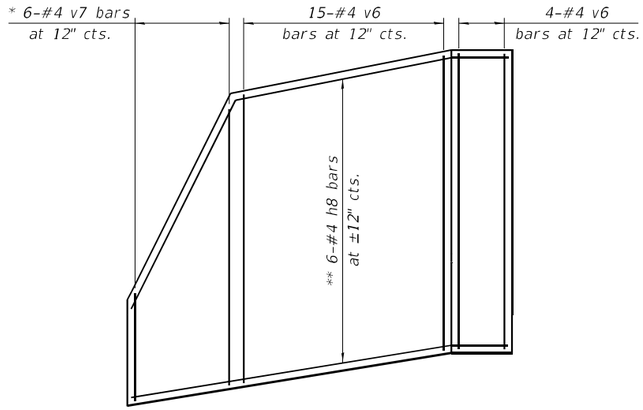

SEGMENT 2F ELEVATION

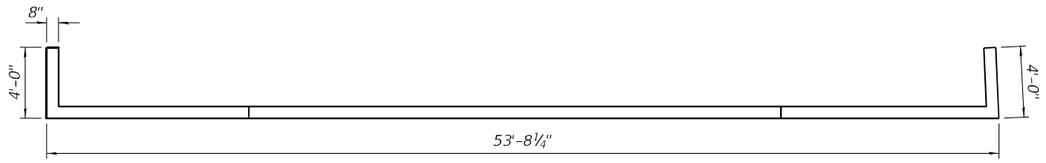

SEGEMENT 2D PLAN

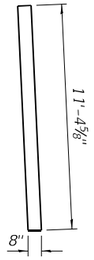

SEGEMENT 2E PLAN

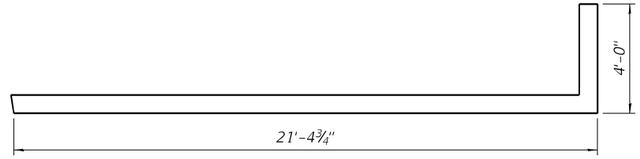

SEGEMENT 2F PLAN

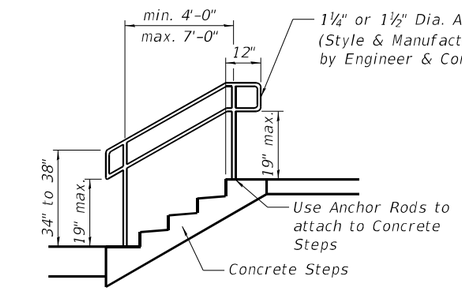

HANDRAIL FOR CONCRETE STEPS

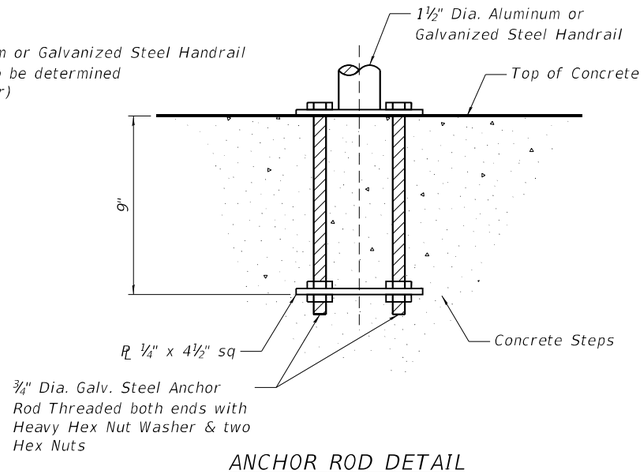

ANCHOR ROD DETAIL

(Included in the cost of Hand or Safety Rail)

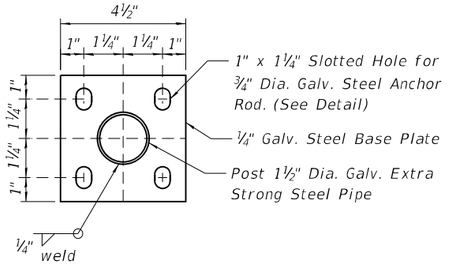

POST BASE PLATE DETAIL

(Included in the cost of Hand or Safety Rail)

* See Cutting Diagram on sheet 6 of 6.
** Cut or bend as needed.

Notes:

Stairways shall have continuous handrails one side of stairs.

Gripping surfaces shall be uninterrupted by construction elements or obstructions.

Ends of handrail shall be either rounded or returned smoothly to floor, wall, or post.

Hand & safety rails shall not rotate within their fittings.

The clear space between handrails and any wall shall be 1½".

Handrail shall conform to Section 509 with the exception that all pipe and connections shall be welded galvanized or aluminum according to Article 1006.30, or 1006.34.

The diameter of the gripping surface of the handrail shall be 1-¼" to 1-½".

This work shall be paid for at the contract unit price per FOOT for Pipe Handrail, special.

MODEL: Default
FILE NAME: E:\1713\Struct\70855 Walls\CADD\CADD_Sheets\70855-wall02-sht04.dgn

10/12/2023 5:43:55 PM

LIN ENGINEERING, LTD. Consulting Engineers Springfield, Illinois	USER NAME =	DESIGNED - CL	REVISED -	STATE OF ILLINOIS DEPARTMENT OF TRANSPORTATION	WALL PLAN AND ELEVATION RETAINING WALL NO. 2
		CHECKED - CZ	REVISED -		
	PLOT SCALE =	DRAWN - AJF	REVISED -		
	PLOT DATE = 10/12/2023	CHECKED - CZ	REVISED -		SHEET 4 OF 6 SHEETS

F.A.P. RTE.	SECTION	COUNTY	TOTAL SHEETS	SHEET NO.
693	(129)RS-4	MCLEAN	218	162
		CONTRACT NO. 70855		
		ILLINOIS	FED. AID PROJECT	

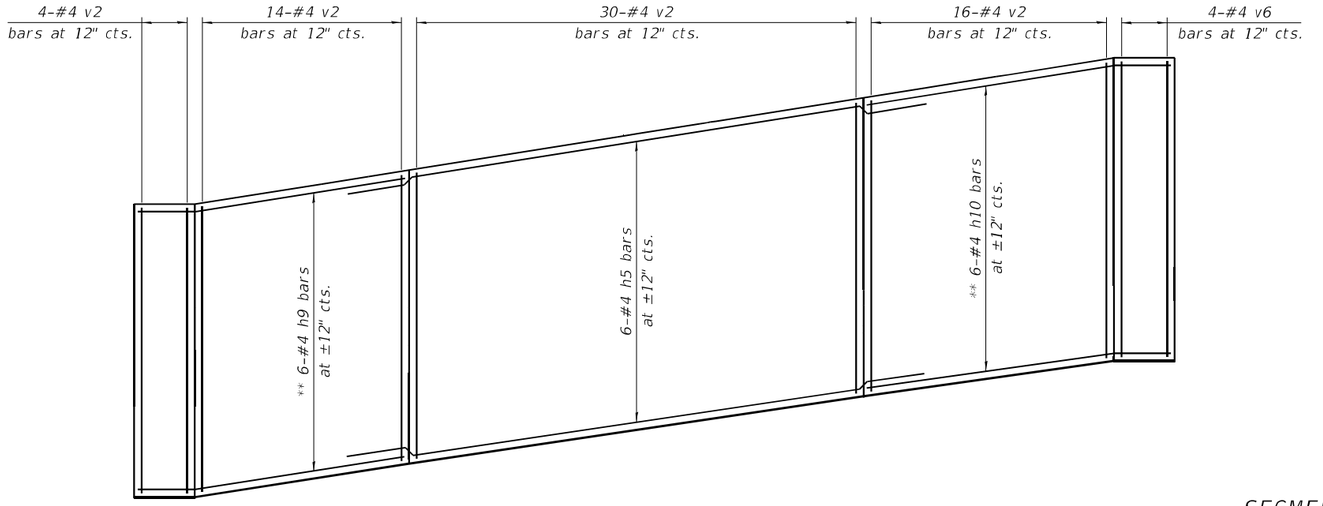

SEGMENT 2G ELEVATION

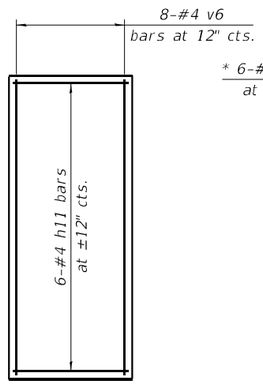

SEGMENT 2H ELEVATION

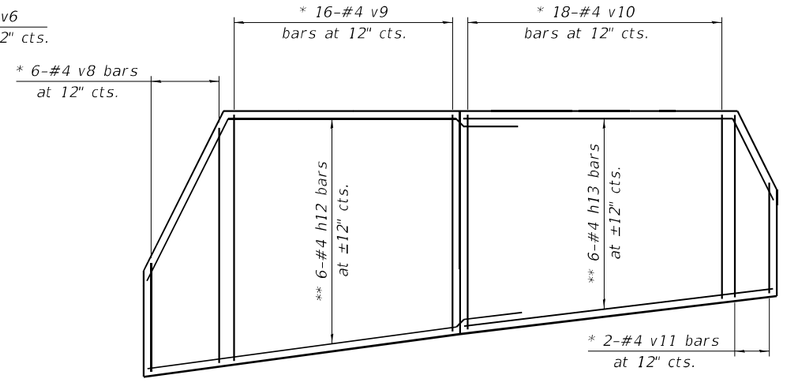

SEGMENT 2I ELEVATION

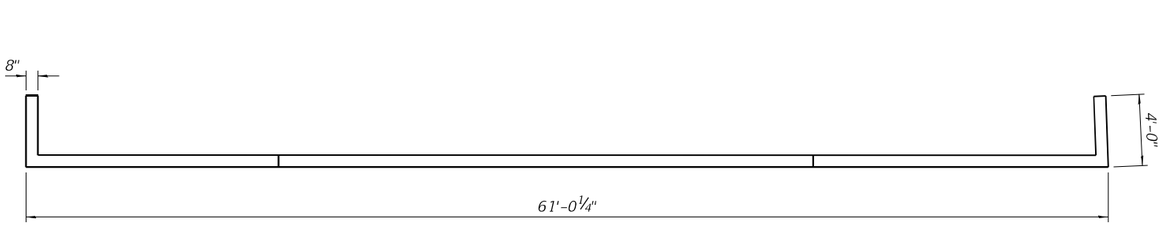

SEGMENT 2G PLAN

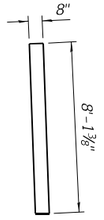

SEGMENT 2H PLAN

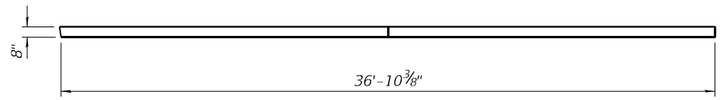

SEGMENT 2I PLAN

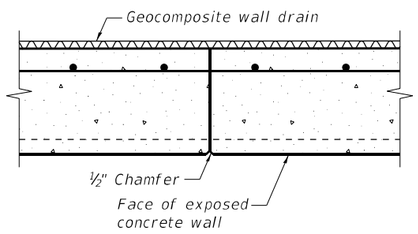

CONSTRUCTION JOINT

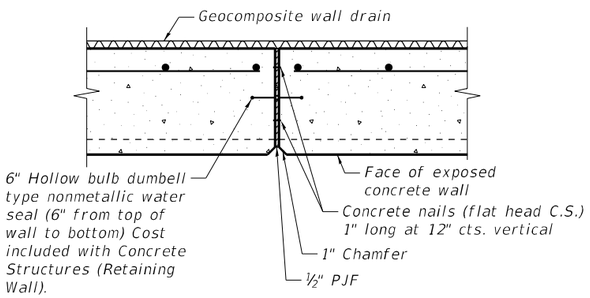

EXPANSION JOINT

* See Cutting Diagram on sheet 6 of 6.
** Cut or bend as needed.

MODEL: Default
FILE NAME: E:\1713Struct\70855 Walls\CADD\CADD_Sheets\70855-wall02-sht05.dgn

10/12/2023 5:43:56 PM

LIN ENGINEERING, LTD.
Consulting Engineers
Springfield, Illinois

USER NAME =		DESIGNED - CL	REVISED -		
		CHECKED - CZ	REVISED -		
PLOT SCALE =		DRAWN - AJF	REVISED -		
PLOT DATE =	10/12/2023	CHECKED - CZ	REVISED -		

STATE OF ILLINOIS
DEPARTMENT OF TRANSPORTATION

WALL PLAN AND ELEVATION
RETAINING WALL NO. **2**
SHEET 5 OF 6 SHEETS

F.A.P. RTE.	SECTION	COUNTY	TOTAL SHEETS	SHEET NO.
693	(129)RS-4	MCLEAN	218	163
		CONTRACT NO. 70855		
	ILLINOIS	FED. AID PROJECT		

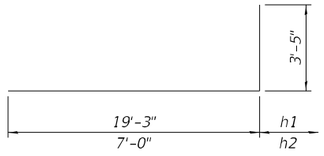

h1 & h2 BARS

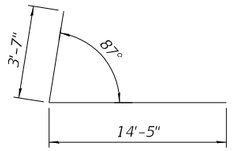

h6 BAR

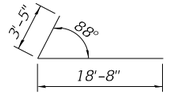

h10 BAR

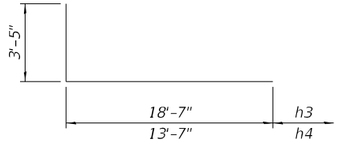

h3 & h4 BARS

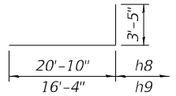

h8 & h9 BARS

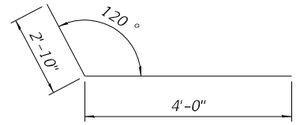

w BAR

RETAINING WALL 2
BILL OF MATERIAL

Bar	No.	Size	Length	Shape
h	6	#4	29'-10"	
h1	6	#4	11'-10"	
h2	5	#4	10'-5"	
h3	5	#4	22'-0"	
h4	6	#4	17'-0"	
h5	12	#4	30'-0"	
h6	6	#4	18'-0"	
h7	6	#4	11'-0"	
h8	6	#4	24'-3"	
h9	6	#4	19'-9"	
h10	6	#4	22'-1"	
h11	6	#4	7'-10"	
h12	6	#4	20'-10"	
h13	6	#4	23'-4"	
v	15	#4	9'-5"	
v1	8	#4	9'-10"	
v2	135	#4	4'-11"	
v3	3	#4	7'-7"	
v4	3	#4	7'-5"	
v5	7	#4	9'-7"	
v6	47	#4	5'-0"	
v7	3	#4	7'-8"	
v8	3	#4	7'-3"	
v9	8	#4	8'-8"	
v10	9	#4	7'-10"	
v11	1	#4	6'-6"	
t	50	#4	3'-8"	
w	20	#4	6'-10"	
Concrete Structure (Retaining Wall)		Cu. Yd.	37.2	
Reinforcement Bars		Pound	2,340	
Structure Excavation		Cu. Yd.	51	
Granular Backfill for Structures		Cu. Yd.	43	
Geocomposite Wall Drain		Sq. Yd.	49	
Pipe Handrail (Special)		Foot	23	
Concrete Steps		Cu. Yd.	3.9	

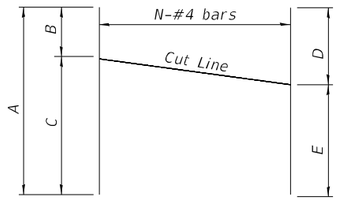

FIELD CUTTING DIAGRAM

Order full length bars and spaced at 12" cts. Cut as shown and use remainder of bars in the other half.

Bar	A	B	C	D	E	N
v	9'-5"	4'-7"	4'-10"	4'-8"	4'-9"	15
v1	9'-10"	4'-10"	5'-0"	4'-11"	4'-11"	8
v3	7'-7"	2'-11"	4'-8"	3'-8"	3'-11"	3
v4	7'-5"	2'-11"	4'-6"	3'-7"	3'-10"	3
v5	9'-7"	4'-7"	5'-0"	4'-9"	4'-10"	7
v7	7'-8"	3'-1"	4'-7"	3'-8"	4'-0"	3
v8	7'-3"	2'-10"	4'-5"	3'-6"	3'-9"	3
v9	8'-8"	4'-2"	4'-6"	4'-4"	4'-4"	8
v10	7'-10"	3'-9"	4'-1"	3'-11"	3'-11"	9
v11	6'-6"	3'-1"	3'-5"	-	-	1

MINIMUM BAR LAP

#4 bar = 2'-7"

MODEL: Default
FILE NAME: E:\1713\Struct\70855 Walls\CADD\CADD_Sheets\70855-wall02-sht06.dgn

10/12/2023 5:43:56 PM

LIN ENGINEERING,LTD.
Consulting Engineers
Springfield, Illinois

USER NAME =	DESIGNED - CL	REVISED -	
	CHECKED - CZ	REVISED -	
PLOT SCALE =	DRAWN - AJF	REVISED -	
PLOT DATE = 10/12/2023	CHECKED - CZ	REVISED -	

STATE OF ILLINOIS
DEPARTMENT OF TRANSPORTATION

WALL DETAILS
RETAINING WALL NO. 2

SHEET 6 OF 6 SHEETS

F.A.P. RTE.	SECTION	COUNTY	TOTAL SHEETS	SHEET NO.
693	(129)RS-4	MCLEAN	218	164
		CONTRACT NO. 70855		
	ILLINOIS FED. AID PROJECT			

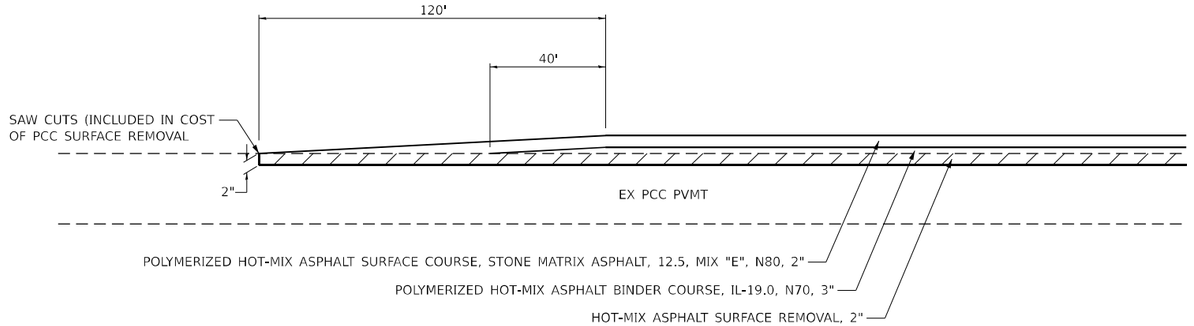

BEGINNING /ENDING TRANSITION DETAIL

STA. 62+75.64 TO STA. 63+95.64
STA. 66+30.98 TO STA. 67+50.98
STA. 68+37.07 TO STA. 69+57.07

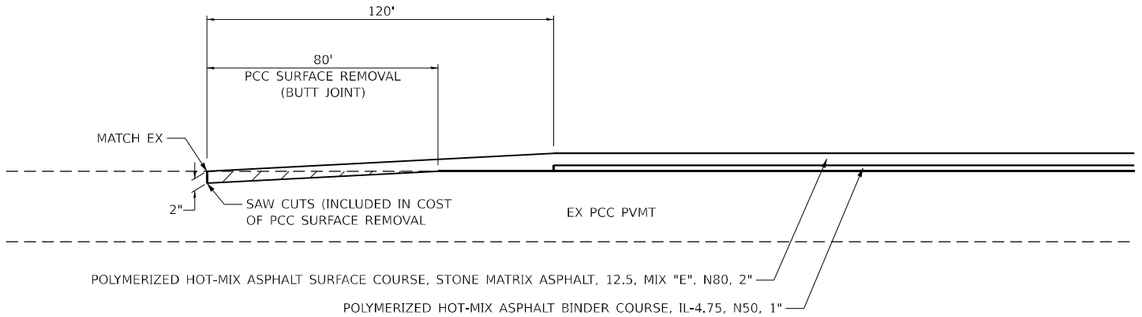

PCC SURFACE REMOVAL DETAIL

STA. 81+71.10 TO STA. 82+91.10
STA. 83+09.22 TO STA. 84+29.22

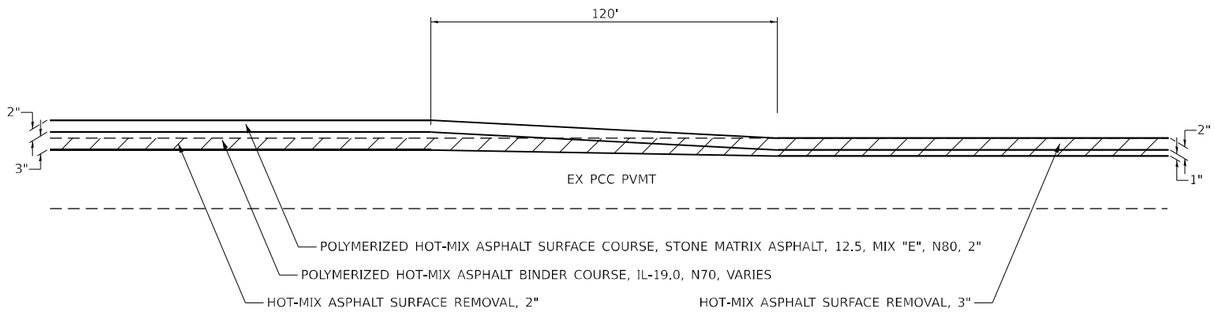

PAVEMENT TRANSITION DETAIL

STA. 89+05.00 TO STA. 90+25.00

MODEL: Detail Sheet 1
FILE NAME: V:\4216 - IL 9 Bloomington\CADD\CADD Sheets\D570855-sht-detail-1.dgn

Hutchison Engineering, Inc.

USER NAME = BDeCraene	DESIGNED -	REVISED -
	DRAWN -	REVISED -
PLOT SCALE = 0.16666633 ' / In.	CHECKED -	REVISED -
PLOT DATE = 10/17/2023	DATE -	REVISED -

STATE OF ILLINOIS
DEPARTMENT OF TRANSPORTATION

FAP 693 (IL RTE 9)
MISCELLANEOUS DETAILS

SCALE: N/A | SHEET 1 OF 3 SHEETS | STA. N/A | TO STA. N/A

F.A.P. RTE.	SECTION	COUNTY	TOTAL SHEETS	SHEET NO.
693	(129)RS-4	McLEAN	218	165
		CONTRACT NO. 70855		
	ILLINOIS FED. AID PROJECT			

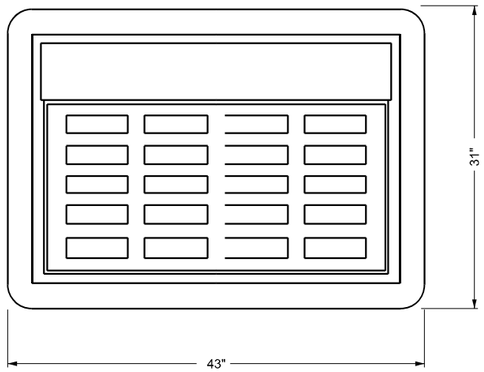

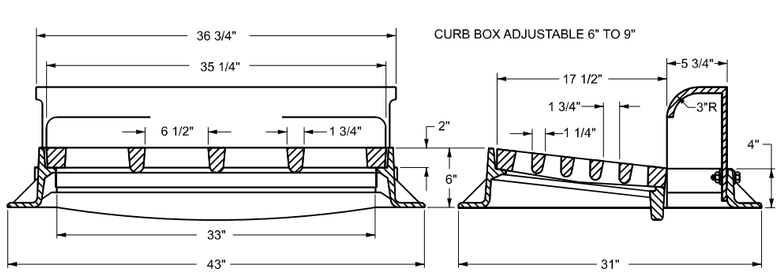

TYPE SPECIAL FRAME & GRATE

SHALL BE A NEENAH FOUNDRY R 3246 WITH A TYPE C GRATE OR APPROVED EQUAL

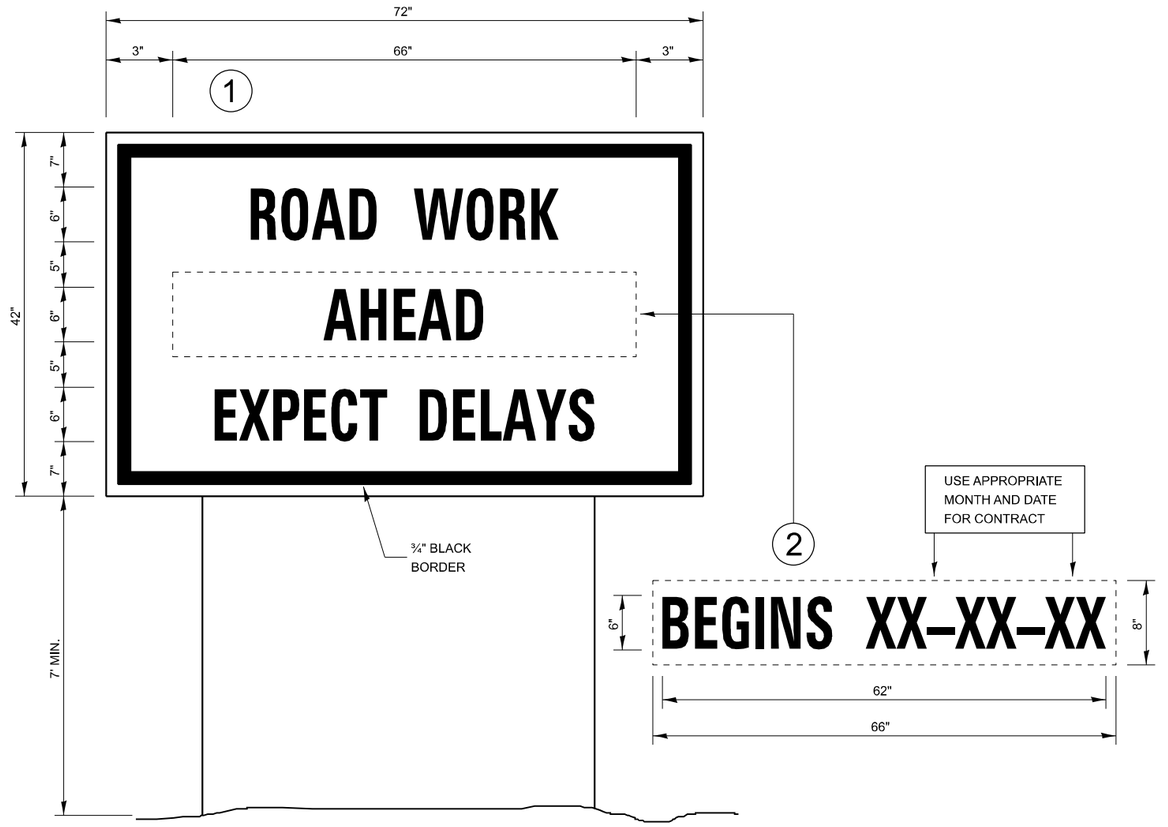

TEMPORARY INFORMATION SIGNING

NOTES:

1. USE 6" D BLACK LETTERING ON FLOURESENT ORANGE BACKGROUND.
2. ERECT SIGNS AT LOCATIONS IN ADVANCE OF THE "ROAD CONSTRUCTION AHEAD" SIGNS AS DIRECTED BY THE ENGINEER.
3. ERECT SIGN (1) WITH INSTALLED PANEL (2) A MINIMUM OF ONE WEEK PRIOR TO THE START OF THE LANE CLOSURE.
4. REMOVE PANEL (2) ON THAT DATE.
5. SEE SPECIAL PROVISION "TEMPORARY INFORMATION SIGNING" FOR ADDITIONAL INFORMATION.
6. WILL BE PAID FOR PER SQ FT AS "TEMPORARY INFORMATION SIGNING". EACH SIGN = 21 SQ FT AND THE DATE PANEL (2) WILL NOT BE MEASURED SEPARATELY FOR PAYMENT.

MODEL: Detail Sheet 2
FILE NAME: V:\4216 - IL 9 Bloomington\CADD\CADD Sheets\D570855-sht-detail-1.dgn

Hutchison Engineering, Inc.

USER NAME = BDeCraene	DESIGNED -	REVISED -
	DRAWN -	REVISED -
PLOT SCALE = 0.16666633 ' / In.	CHECKED -	REVISED -
PLOT DATE = 10/17/2023	DATE -	REVISED -

STATE OF ILLINOIS
DEPARTMENT OF TRANSPORTATION

FAP 693 (IL RTE 9)
MISCELLANEOUS DETAILS

SCALE: N/A | SHEET 2 OF 3 SHEETS | STA. N/A | TO STA. N/A

F.A.P. RTE.	SECTION	COUNTY	TOTAL SHEETS	SHEET NO.
693	(129)RS-4	McLEAN	218	166
		CONTRACT NO. 70855		
	ILLINOIS	FED. AID PROJECT		

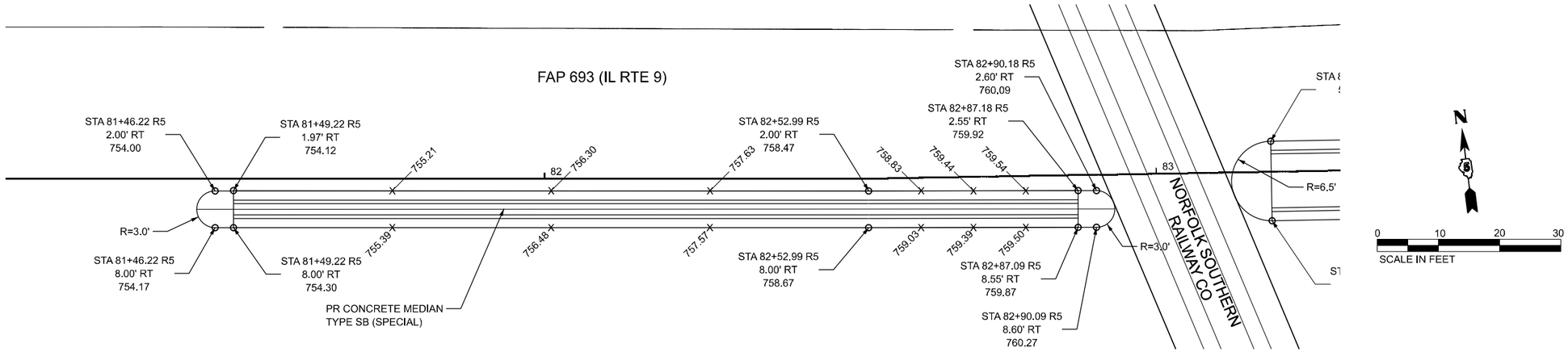

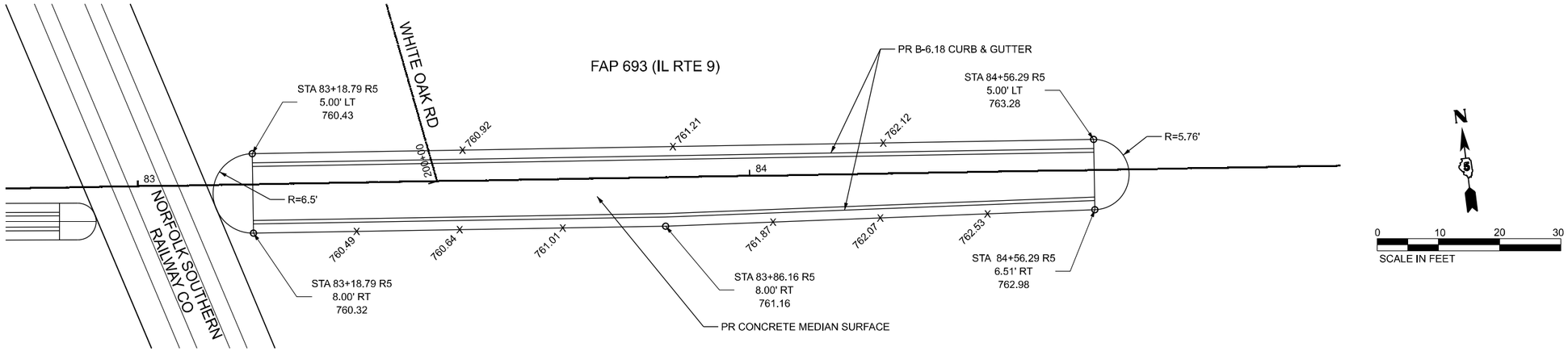

PROPOSED MEDIAN DETAILS

MODEL: Detail Sheet 3
FILE NAME: V:\4216 - IL 9 Bloomington\CADD\CADD Sheets\D570855-plh-detail-1.dgn

Hutchison Engineering, Inc.

USER NAME = BDeCraene	DESIGNED -	REVISED -
	DRAWN -	REVISED -
PLOT SCALE = 0.16666633 ' / In.	CHECKED -	REVISED -
PLOT DATE = 10/17/2023	DATE -	REVISED -

STATE OF ILLINOIS
DEPARTMENT OF TRANSPORTATION

FAP 693 (IL RTE 9)
MISCELLANEOUS DETAILS

SCALE: N/A | SHEET 3 OF 3 SHEETS | STA. N/A | TO STA. N/A

F.A.P. RTE.	SECTION	COUNTY	TOTAL SHEETS	SHEET NO.
693	(129)RS-4	McLEAN	218	167
		CONTRACT NO. 70855		
	ILLINOIS	FED. AID PROJECT		

NEW CONSTRUCTION

("3R" IMPROVEMENTS)

(ADJACENT TO RESURFACING OR WIDENING AND RESURFACING)

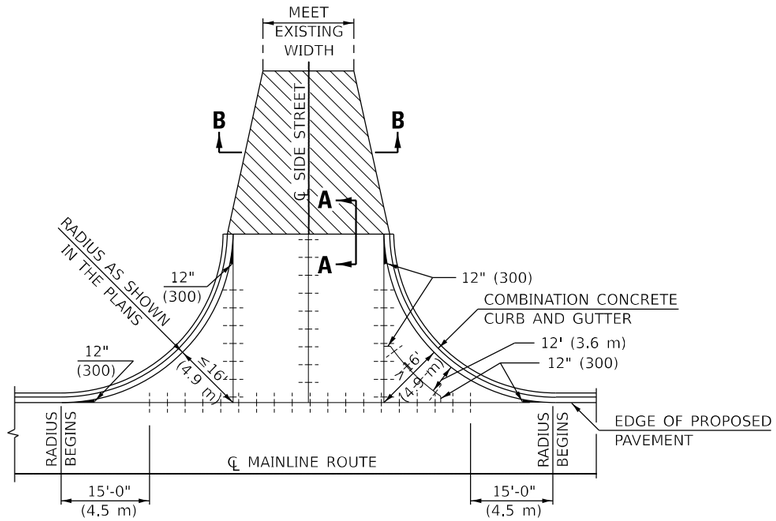

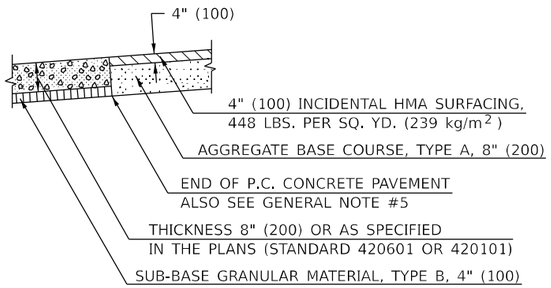

SECTION A–A

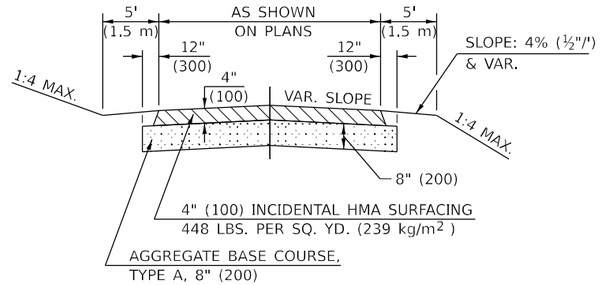

SECTION B–B

(ADJACENT TO JOINTED P.C.C. PAVEMENT)

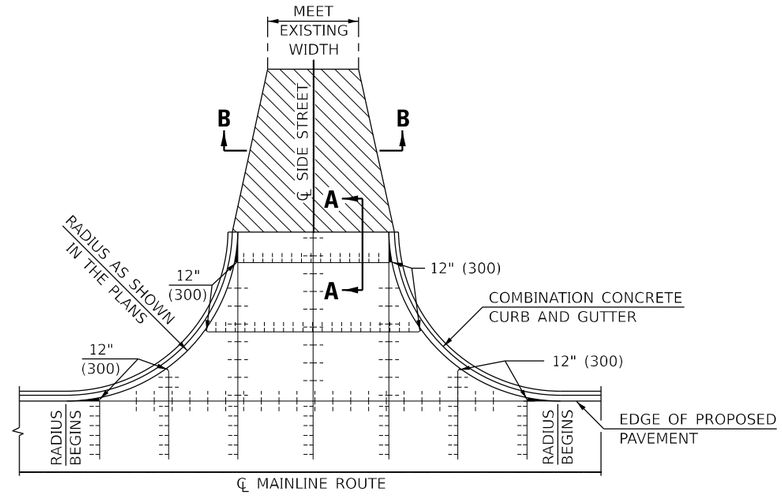

LEGEND

- LONGITUDINAL JOINT WITH TIE BARS (STANDARD 420001)
- INCIDENTAL HMA SURFACING OVER AGGREGATE BASE COURSE (SEE SECTION A-A) (SEE NOTE #5)
- SAWED CONTRACTION JOINT WITH TIE BARS (STANDARD 420001)

GENERAL NOTES

1. ALL INTERSECTING SIDE STREETS SHALL BE CONSTRUCTED IN ACCORDANCE WITH THIS DETAIL EXCEPT THOSE NOTED IN THE PLANS.
2. SAWED LONGITUDINAL JOINTS WITH TIE BARS WILL BE ALLOWED ALONG THE CENTERLINE ONLY WHEN THE STREET RETURN IS POURED FULL WIDTH. OTHER LONGITUDINAL JOINTS SHALL BE ACCORDING TO STANDARD 420001.
3. THE MATERIAL WITHIN THE WIDTH TRANSITION AREA MAY BE DIFFERENT THAN SHOWN ABOVE. THE WIDTH TRANSITION MAY NOT BE REQUIRED AT ALL LOCATIONS.
4. SHADED AREAS SHALL BE POURED MONOLITHIC WITH ADJACENT COMBINATION CONCRETE CURB AND GUTTER. THIS WORK WILL BE MEASURED AND INCLUDED IN THE CONTRACT UNIT PRICE PER SQUARE YARD (m^2) FOR PORTLAND CEMENT CONCRETE PAVEMENT (JOINTED) OF THE TYPE AND THICKNESS SPECIFIED IN THE PLANS.
5. SAWED CONTRACTION JOINTS, AS SHOWN IN STANDARD 420001, SHALL BE REQUIRED AT 12' (3.6 m) TO 18' (5.5 m) SPACING FOR JOINTED PCC PAVEMENT AND AT AT 40' (12.2 m) (MIN. SPACING 20' (6.1 m)) WHEN THE LENGTH OF THE RETURN EXCEEDS 40' (12.2 m).
6. JOINT SPACING, MONOLITHIC POURS AND OTHER FEATURES MAY BE MODIFIED TO MAINTAIN ALIGNMENT OF JOINTS BETWEEN ADJACENT PANELS. SEE PAVEMENT JOINT PLANS.
7. PLACEMENT OF PAVEMENT FABRIC SHALL BE AS SHOWN ON THE STANDARDS INCLUDED WITH THIS IMPROVEMENT.

URBAN SIDEROAD DESIGN STANDARDS (PPM 40-06)									
	New Construction OR 3R (Existing Width Less Than 20 ft)			3R (Existing Width 20 ft or Greater) OR 3P			SMART or Contract Maintenance		
DESIGN ELEMENT	min.	des.	max.	min.	des.	max.	min.	des.	max.
SURFACE WIDTH (FT); (measured at end of radius or row line; greatest distance from edge of traveled way)	30 f-f	30 f-f	Coordinate with Geometrics Engineer	resurface existing con guration to completion of radius return or row line; greatest distance from edge of traveled way; major sideroads (> 400 adt) shall have "butt joints" constructed whether the entrance is hma or pcc; minor sideroads (< 400 adt) shall have "featheredge rundown" as shown in district cadd detail 406AAAAA			resurface existing con guration with the completion of a 10 ft. featheredge rundown for ALL sideroads as shown in district cadd detail 406AAAAA		
RADIUS (FT)	30	30							
ENTRANCE GRADE (%)	1	1 to 4	4						
BREAKOVER (%)	0	5	10						
INTERSECTION ANGLE	60	75 to 90							
SURFACE TYPE									
INCIDENTAL HMA SURFACING (INCH)	4			taper from 2 1/4" to 1 1/2" or featheredge			taper from 1 1/2" to featheredge		
AGGREGATE BASE COURSE, TYPE A (INCH)	8	4		if applicable use item: 35800100 Preparation of Base					
PCC PAVEMENT (INCH)		8							

Note: All dimensions are in INCHES (millimeters) unless otherwise shown.

DISTRICT 5 DETAIL NO. 4200030A

USER NAME = BDeCraene	DESIGNED -	REVISED -	11/06 TJB
	DRAWN -	REVISED -	09/07 KAG
PLOT SCALE = 0.16666633 ' / in.	CHECKED -	REVISED -	
PLOT DATE = 10/17/2023	DATE -	REVISED -	

STATE OF ILLINOIS
DEPARTMENT OF TRANSPORTATION

INTERSECTING SIDE STREETS (URBAN)

SCALE: | SHEET OF SHEETS | STA. | TO STA.

F.A.P. RTE.	SECTION	COUNTY	TOTAL SHEETS	SHEET NO.
693	(129)RS-4	McLEAN	218	168
		CONTRACT NO. 70855		
	ILLINOIS FED. AID PROJECT			

MODEL: Detail Sheet -district 5-0
FILE NAME: V:\4216 - IL 9 Bloomington\CADD\CADD Sheets\D5T0855-sht-detail-1.dgn

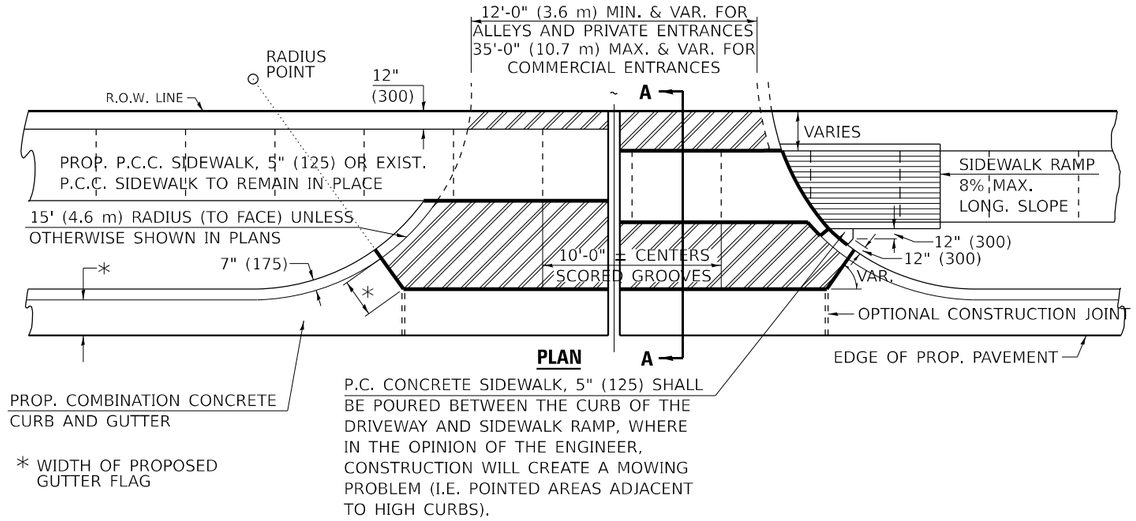

LEGEND

PROP. P.C. CONCRETE DRIVEWAY PAVEMENT

LONGITUDINAL CURB EXPANSION JOINT

NOTE: SIDEWALK RAMPS SHALL BE CONSTRUCTED AT COMMERCIAL ENTRANCES. AT PRIVATE ENTRANCES RAMPS SHALL USUALLY BE NEEDED WHERE NARROW BOULEVARDS OR RADII GREATER THAN 15' (4.6 m) ARE CONSTRUCTED. THE BACK CURB RAMPS AT PRIVATE ENTRANCES MAY BE ELIMINATED IF GRADING CAN BE ACCOMPLISHED WITHOUT THE CURB.

NOTE: THE ENTRANCE WIDTHS SHOWN ON THE PLANS SHALL BE INTERPRETED TO BE THE WIDTHS AT THE COMPLETED RADIUS, WHICH MAY BE LOCATED BEHIND THE R.O.W. LINE.

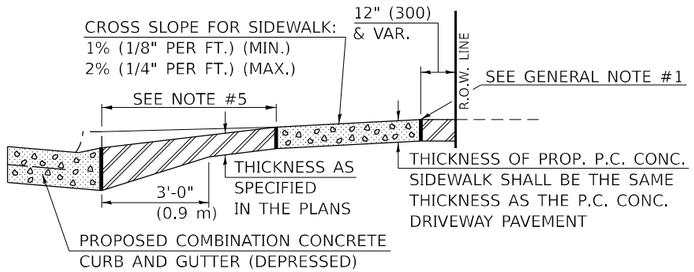

SECTION A–A WITH POSITIVE GRADE

URBAN ENTRANCE DESIGN STANDARDS (PPM 40-09)												
	NEW CONSTRUCTION & 3R with CONSTRUCTION						3R w/out RECONSTRUCTION, 3P, SMART & CM					
	NONCOMMERCIAL			COMMERCIAL			NONCOMMERCIAL			COMMERCIAL		
DESIGN ELEMENT	min.	des.	max.	min.	des.	max.	min.	des.	max.	min.	des.	max.
SURFACE WIDTH (FT)	12	12 or 14 with	24	1 LANE, 1 WAY: 14	16	24				1 LANE, 1 WAY 2 LANE, 2 WAY		
				2 LANE, 2 WAY: 24	30	35	resurface existing configuration; existing hma or pcc entrances shall have "butt joints" constructed; existing aggregate or earth entrances shall have the continuation of aggregate shoulders placed behind them					
RADIUS (FT)	12	15 or 12	25	15	30	40						
ENTRANCE GRADE (%)	0	2 to 5	8	0	2 to 4	6						
SURFACE TYPE												
INCIDENTAL HMA SURFACING (INCH)				3 or 4			taper from hma resurfacing thickness (2 1/2", 2 1/4" or 1 1/2") to 1 1/2" for "butt joints" and to minimize aggregate shoulder					
AGGREGATE SURFACE COURSE, TYPE A (INCH)				8			if applicable, use items: Preparation of Base & Aggregate Base Repair; see PPM 30-02					
PCC DRIVEWAY PAVEMENT (INCH)	3	6			6 or 8							

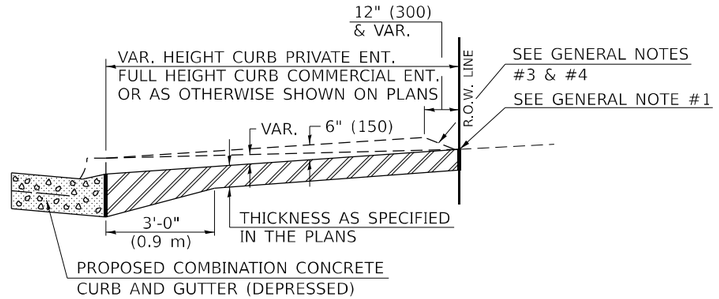

SECTION A–A WITHOUT SIDEWALK

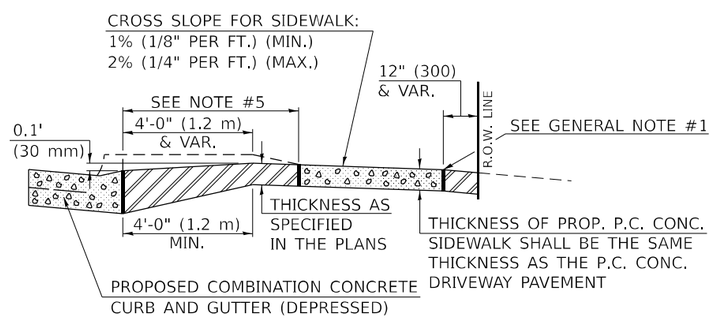

SECTION A–A WITH NEGATIVE GRADE

GENERAL NOTES

1. THIS LONGITUDINAL CURB EXPANSION JOINT SHALL BE PLACED ONLY WHERE THE PROPOSED P.C. CONCRETE SIDEWALK OR DRIVEWAY PAVEMENT MEETS AN EXISTING CONCRETE ENTRANCE. THE P.C.C. DRIVEWAY PAVEMENT WILL BE POURED MONOLITHIC WITH THE P.C.C. SIDEWALK WHEN THE DISTANCE BETWEEN THE SIDEWALK AND RIGHT-OF-WAY IS LESS THAN OR EQUAL TO 24" (600 mm). THE LONGITUDINAL EXPANSION JOINT BETWEEN THE DRIVEWAY PAVEMENT AND SIDEWALK WILL NOT BE NEEDED UNLESS THE DISTANCE EXCEEDS 24" (600 mm).
2. THE LONGITUDINAL CURB EXPANSION JOINT SHALL CONFORM TO SECTION 1051 OF THE STANDARD SPECS.
3. DRIVEWAYS THAT WILL MEET EXISTING OR PROPOSED CURB NEAR THE R.O.W. LINE SHALL HAVE THE CURB CONSTRUCTED FULL HEIGHT TO THE R.O.W. LINE.
4. DRIVEWAYS THAT WILL BE CONSTRUCTED WITH FULL HEIGHT CURBS AND NOT MEETING EXISTING OR PROPOSED CURBS NEAR THE R.O.W. LINE SHALL HAVE THE CURB SLOPED AS SHOWN ABOVE.
5. DEPRESSED CURB SHALL BE BUILT ONLY AT PRIVATE DRIVES WITH NO SIDEWALK RAMPS.
6. THE ENTRANCE GRADES WILL BE AS SHOWN ON THE STATION CROSS SECTIONS AND AS DIRECTED BY THE ENGINEER.
7. THE P.C. CONCRETE DRIVEWAY PAVEMENT SHALL BE CONSTRUCTED WITH SCORED GROOVES, AS SPECIFIED IN ARTICLE 424.06 OF THE STANDARD SPECIFICATIONS, AT APPROXIMATELY EVERY OTHER JOINT, EITHER IN THE EXISTING SIDEWALK OR THE PROPOSED SIDEWALK. THE PROPOSED P.C. CONCRETE SIDEWALK SHALL BE CONSTRUCTED PRIOR TO CONSTRUCTING THE P.C. CONC. DRIVEWAY PAVEMENT AND NO ADDITIONAL COMPENSATION WILL BE ALLOWED.
8. THE COMBINATION CONCRETE CURB AND GUTTER SHALL BE CONSTRUCTED AS SHOWN AND WILL BE PAID FOR AT THE CONTRACT UNIT PRICE PER LIN.FT. (METER) FOR COMBINATION CONCRETE CURB AND GUTTER OF THE TYPE SPECIFIED IN THE PLANS AND NO ADDITIONAL COMPENSATION WILL BE ALLOWED.
9. THE P.C. CONCRETE SIDEWALK SHALL BE CONSTRUCTED AS SHOWN ABOVE AND WILL BE PAID FOR AT THE CONTRACT UNIT PRICE PER SQ.FT. (m^2) FOR P.C. CONCRETE SIDEWALK OF THE THICKNESS SPECIFIED IN THE PLANS AND NO ADDITIONAL COMPENSATION WILL BE ALLOWED FOR THE EXTRA THICKNESS AS SHOWN ABOVE OR THE SEQUENCE OF CONSTRUCTION AS SPECIFIED.
10. BEFORE A CHANGE IN THE METHOD OF CONSTRUCTION IS ALLOWED, THE REQUEST SHALL BE SUBMITTED IN WRITING AND MUST BE APPROVED BY THE ENGINEER.
11. THE VARIABLE HEIGHT CURB ADJACENT TO THE P.C. CONCRETE DRIVEWAY PAVEMENT SHALL BE CONSTRUCTED MONOLITHIC WITH AND INCLUDED IN THE AREA OF THE P.C. CONCRETE DRIVEWAY PAVEMENT OF THE THICKNESS SPECIFIED IN THE PLANS. THIS WORK WILL BE PAID FOR AT THE CONTRACT UNIT PRICE PER SQ.YD. (m^2) FOR P.C. CONCRETE DRIVEWAY PAVEMENT OF THE THICKNESS SPECIFIED IN THE PLANS, INCLUDING THE MONOLITHIC CURBS AS SPECIFIED, THE SCORED GROOVES, THE LONGITUDINAL CURB EXPANSION JOINTS, AND THE ADDITIONAL THICKNESS REQUIRED ADJACENT TO THE DEPRESSED COMBINATION CONCRETE CURB AND GUTTER, AND NO ADDITIONAL COMPENSATION WILL BE ALLOWED.

Note: All dimensions are in INCHES (millimeters) unless otherwise shown.

DISTRICT 5 DETAIL NO. 42300AAA

USER NAME = BDeCraene	DESIGNED -	REVISED -	11/06 TJB
	DRAWN -	REVISED -	09/07 KAG
PLOT SCALE = 0.16666633 ' / in.	CHECKED -	REVISED -	
PLOT DATE = 10/17/2023	DATE -	REVISED -	

STATE OF ILLINOIS
DEPARTMENT OF TRANSPORTATION

DRIVEWAY PAVEMENT (PCC) (NON & COMMERCIAL URBAN)

SCALE: | SHEET 1 OF 1 SHEETS | STA. | TO STA.

F.A.P. RTE.	SECTION	COUNTY	TOTAL SHEETS	SHEET NO.
693	(129)RS-4	McLEAN	218	169
		CONTRACT NO. 70855		
	ILLINOIS FED. AID PROJECT			

MODEL: Detail Sheet -district 5-1
FILE NAME: V:\4216 - IL 9 Bloomington\CADD\CADD Sheets\D570855-sht-detail-1.dgn

ROAD CLOSURE

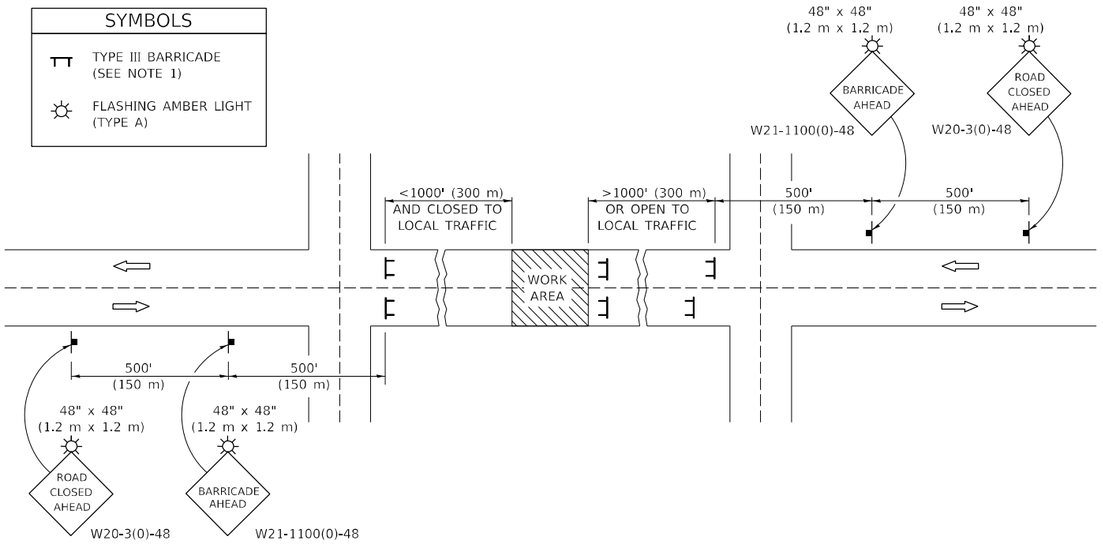

GENERAL NOTES

1. TYPE III BARRICADES SHALL BE AS SHOWN ON STANDARD 701901 "TYPICAL APPLICATIONS OF TYPE III BARRICADES CLOSING A ROAD". EACH TYPE III BARRICADE SHALL HAVE TWO FLASHING AMBER LIGHTS MOUNTED ABOVE IT.
2. IF THE ROAD IS OPEN TO LOCAL TRAFFIC OR EXCEEDS 1000' (300 m), ANOTHER SET OF TYPE III BARRICADES, EQUIPPED AS IN NOTE 1 ABOVE, SHALL BE PLACED AT EACH END OF THE WORK AREA.
3. WHEN A STOP CONDITION EXISTS, NO SIGNS ARE REQUIRED IN ADVANCE OF THE "STOP" SIGN WHEN THE ROAD IS CLOSED WITHIN 100' (30 m) OF THE INTERSECTION.
4. STANDARD 701901 SHALL APPLY FOR THE PLACEMENT & DESIGN OF TYPE III BARRICADES.
5. IF A TYPE III BARRICADE WITH AN ATTACHED SIGN PANEL WHICH MEETS NCHRP 350 IS NOT AVAILABLE, THE SIGNS MAY BE MOUNTED ON AN NCHRP 350 TEMPORARY SIGN SUPPORT DIRECTLY IN FRONT OF THE BARRICADE.
6. REFLECTORIZED STRIPING SHALL APPEAR ON BOTH SIDES OF THE TY III BARRICADES IF ROAD IS OPEN TO LOCAL TRAFFIC.
7. ALL SIGNS SHALL BE POST MOUNTED IF THE CLOSURE TIME EXCEEDS FOUR DAYS.
8. A MINIMUM OF TWO FLASHING LIGHTS SHALL BE USED AT NIGHT ON EACH APPROACH IN ADVANCE OF THE WORK AREA. FLASHING LIGHTS SHALL BE INSTALLED ABOVE THE FIRST TWO SIGNS IN THE SERIES.
9. LONGITUDINAL DIMENSIONS MAY BE ADJUSTED SLIGHTLY TO FIT FIELD CONDITIONS.
10. FORMS BT. 725 AND BT. 726 ARE REQUIRED.
11. WHEN A SIDEROAD INTERSECTS THE HIGHWAY ON WHICH WORK IS BEING PERFORMED, ADDITIONAL TRAFFIC DEVICES SHALL BE ERECTED AND PROVIDED AS DIRECTED BY THE ENGINEER.
12. AN ADDITIONAL SIGN MAY BE REQUIRED AT A MAJOR INTERSECTING ROAD IN ADVANCE OF THE CLOSURE. THE ADDITIONAL SIGN SHALL GIVE THE DISTANCE TO THE BARRICADE IN MILES OR FRACTIONS OF A MILE.

SIDEROAD / STREET CLOSURE

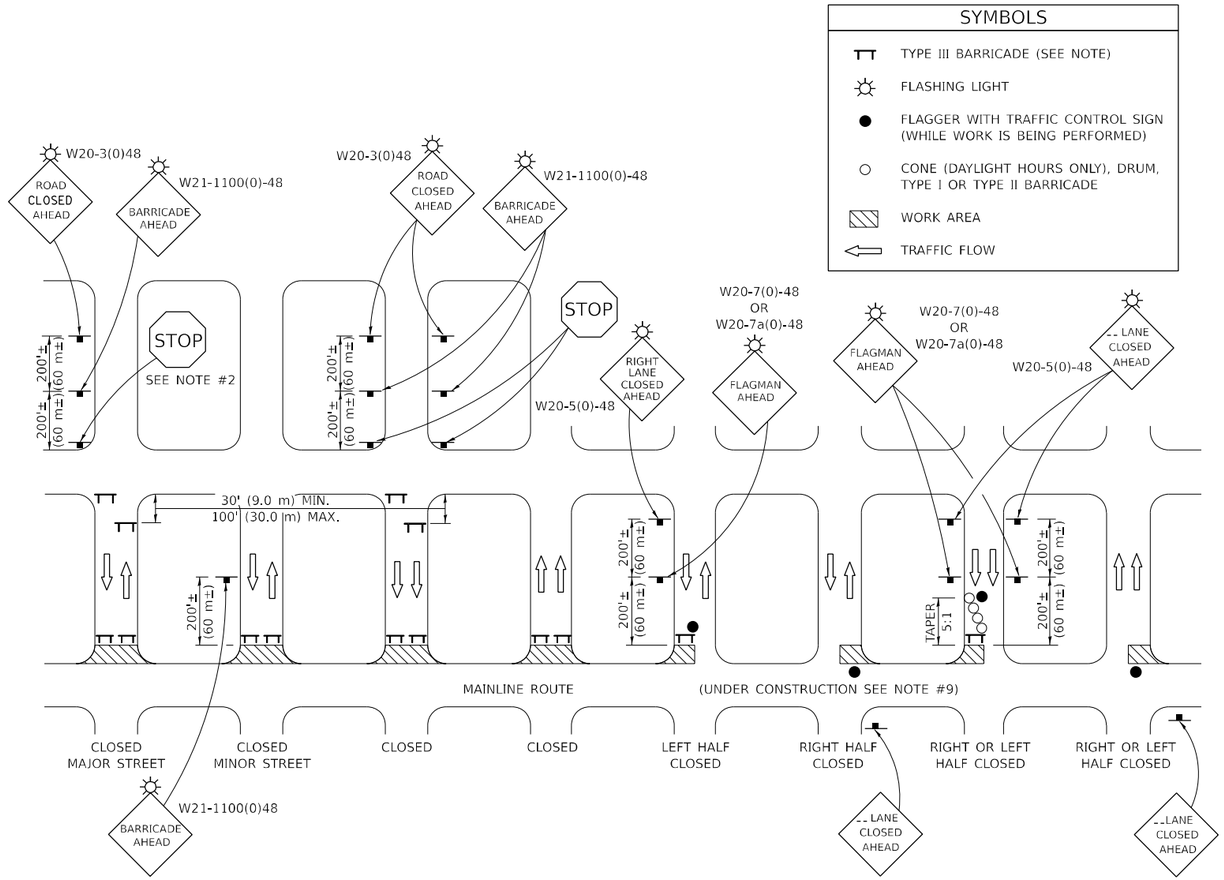

GENERAL NOTES

1. TYPE III BARRICADES SHALL BE AS SHOWN ON "TYPICAL APPLICATIONS OF TYPE III BARRICADES CLOSING A ROAD". EACH TYPE III BARRICADE SHALL HAVE TWO FLASHING AMBER LIGHTS MOUNTED ABOVE IT.
2. WHERE A STOP CONDITION EXISTS, AS SHOWN ABOVE, WARNING SIGNS MAY BE OMITTED IN ADVANCE OF THE "STOP" SIGN.
3. STANDARD 701901 SHALL APPLY FOR THE PLACEMENT & MANUFACTURE OF TYPE III BARRICADES.
4. ALL SIGNS SHALL BE POST MOUNTED IF THE CLOSURE TIME EXCEEDS FOUR DAYS.
5. ONE FLASHING LIGHT IS REQUIRED ABOVE EACH ADVANCE WARNING SIGN DURING HOURS OF DARKNESS.
6. LONGITUDINAL DIMENSIONS MAY BE ADJUSTED SLIGHTLY TO FIT FIELD CONDITIONS.
7. FORMS BT 725 AND BT 726 ARE REQUIRED.
8. THE MAINLINE ROUTE TEMPORARY TRAFFIC CONTROL SHALL BE IN ACCORDANCE WITH THE PLANS, SPECIAL PROVISIONS AND STANDARD SPECIFICATIONS.
9. ALL FLAGGERS REQUIRED AT SIDE ROADS AND ENTRANCES REMAINING OPEN TO TRAFFIC AND/OR ADDITIONAL BARRICADES REQUIRED BY THE ENGINEER TO CLOSE SIDE ROADS AND ENTRANCES WILL BE PAID FOR ACCORDING TO ARTICLE 109.04.

Note: All dimensions are in INCHES (millimeters) unless otherwise shown.

DISTRICT 5 DETAIL NO. 70200000

USER NAME = BDeCraene	DESIGNED -	REVISED -	11/06
	DRAWN -	REVISED -	12/07
PLOT SCALE = 0.16666633 ' / in.	CHECKED -	REVISED -	09/09 KJT
PLOT DATE = 10/17/2023	DATE -	REVISED -	

STATE OF ILLINOIS
DEPARTMENT OF TRANSPORTATION

TRAFFIC CONTROL & PROTECTION DEVICES (ROAD & SIDEROAD / STREET CLOSURES)

SCALE: | SHEET 1 OF 1 SHEETS | STA. | TO STA.

F.A.P. RTE.	SECTION	COUNTY	TOTAL SHEETS	SHEET NO.
693	(129)RS-4	McLEAN	218	170
		CONTRACT NO. 70855		
	ILLINOIS FED. AID PROJECT			

MODEL: Detail Sheet -district_5-1.5
FILE NAME: V:\4216 - IL 9 Bloomington\CADD\CADD Sheets\D570855-sht-detail-1.dgn

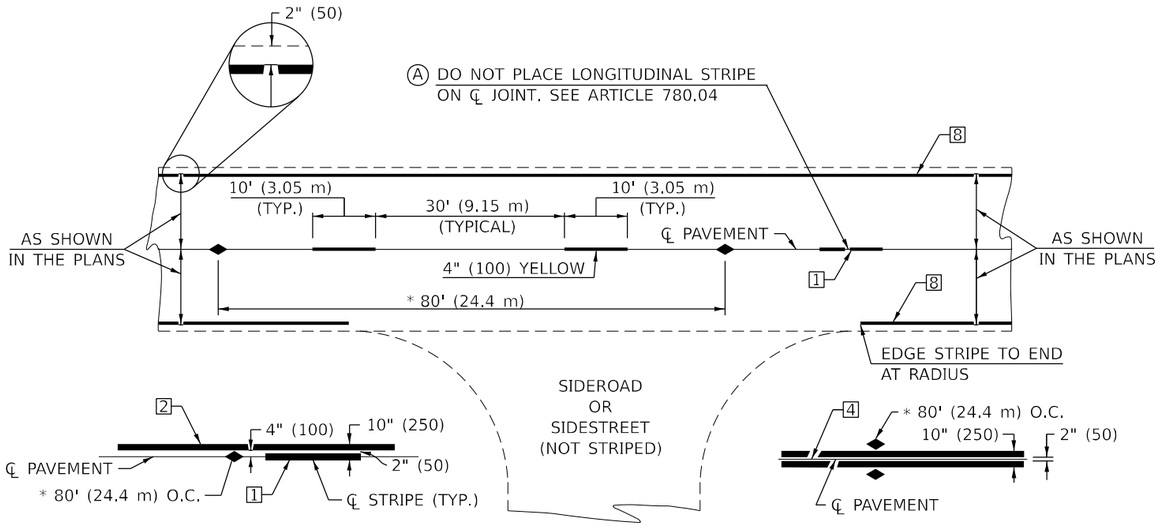

SINGLE NO PASSING

DOUBLE NO PASSING

* REDUCE TO 40' (12.2 m) O.C. ON CURVES WITH POSTED OR ADVISORY SPEEDS OF 45 mph (70 km/h) OR LESS.

TWO LANE/TWO WAY

TYPICAL PAVEMENT MARKING LEGEND

1. 4" (100) SKIP-DASH (YELLOW)
2. 4" (100) SOLID (YELLOW)
3. 12" (300) DIAGONAL (YELLOW)
4. 4" (100) DOUBLE YELLOW (NARROW)
5. RESERVED
6. RESERVED
7. 4" (100) SKIP-DASH (WHITE)
8. 4" (100) SOLID (WHITE)
9. 12" (300) DIAGONAL (WHITE)
10. 6" (150) SOLID (WHITE)
11. 24" (600) STOP BAR (WHITE)
12. 8" (200) SOLID (WHITE)
13. 4" (100) LANE LINE EXTENSIONS (WHITE)
14. 4" (100) PARKING WHITE

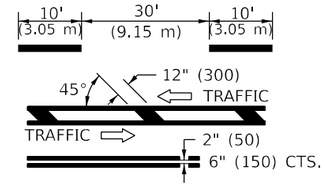

TYPICAL PAVEMENT MARKERS LEGEND

- TWO-WAY AMBER MARKER
- ONE-WAY AMBER MARKER
- ONE-WAY CRYSTAL MARKER

RURAL LEFT TURN

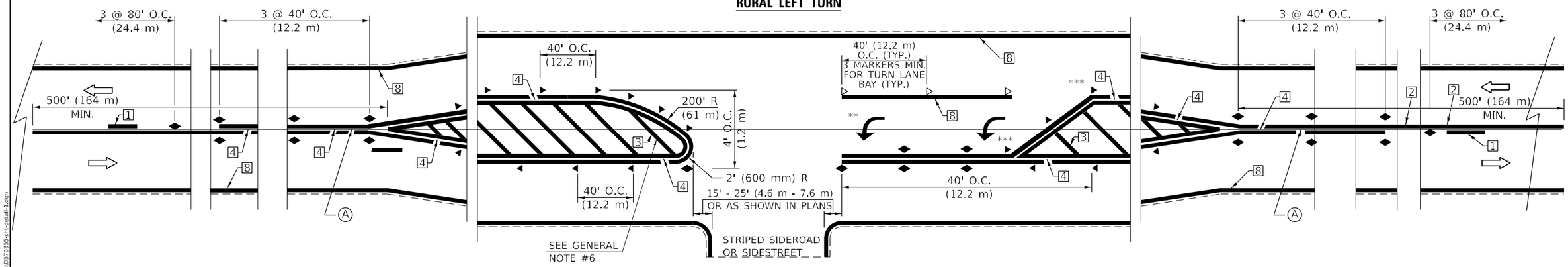

*** REDUCE SPACING IF NECESSARY TO ASSURE MARKERS AT CORNER POINTS.

** TURN ARROWS SHALL BE PLACED AS SHOWN ON SHEET #2.

Note: All dimensions are in INCHES (millimeters) unless otherwise shown.

DISTRICT 5 DETAIL NO. 7800AAAA

USER NAME = BDeCraene	DESIGNED -	REVISED - 9/2009 KJT	
	DRAWN -	REVISED - 4/2014 JLA	
PLOT SCALE = 0.16666633 ' / in.	CHECKED -	REVISED - 3/2019 SWN	
PLOT DATE = 10/17/2023	DATE -	REVISED - 8/2022 JLA	

STATE OF ILLINOIS
DEPARTMENT OF TRANSPORTATION

PAVEMENT MARKING AND MARKERS (RURAL & URBAN APPLICATIONS)

SCALE: | SHEET 1 OF 4 SHEETS | STA. | TO STA.

F.A.P. RTE.	SECTION	COUNTY	TOTAL SHEETS	SHEET NO.
693	(129)RS-4	McLEAN	218	171
		CONTRACT NO. 70855		
	ILLINOIS FED. AID PROJECT			

MODEL: Detail Sheet - district 5-2
FILE NAME: V:\4216 - IL 9 Bloomington\CADD\CADD Sheets\D570895-sht-detail-1.cgn

URBAN LEFT TURN

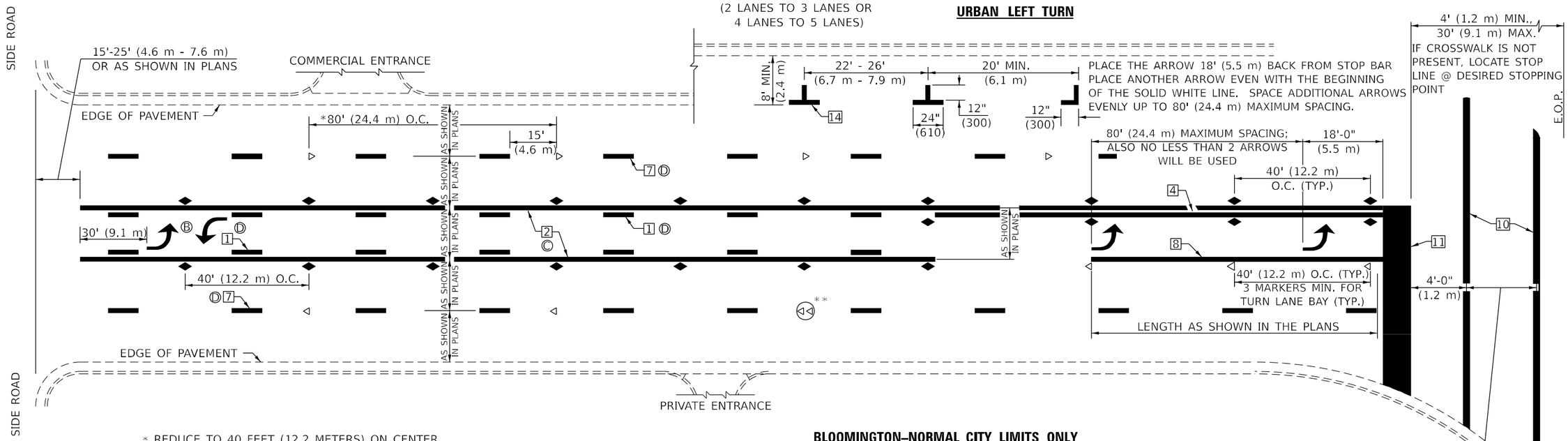

* REDUCE TO 40 FEET (12.2 METERS) ON CENTER ON CURVES WHERE ADVISORY SPEEDS ARE 10 MPH (15 km/h) LOWER THAN POSTED SPEEDS.

** DOUBLE LANE LINE MARKERS SHALL BE SPECIFIED AND SPACED AS SHOWN IN HIGHWAY STANDARD 781001 FOR MULTI-LANE DIVIDED AND UNDIVIDED HIGHWAYS.

GENERAL NOTES:

Ⓑ TURN ARROW PAIRS SHALL BE PLACED AT 250' (75 m) INTERVALS AND SHALL BE EVENLY SPACED BETWEEN BOTH ENDS OF THE BIDIRECTIONAL LEFT TURN LANE.

Ⓒ THE SOLID YELLOW PAVEMENT MARKINGS 2 SHOULD GENERALLY START OR END NEAR THE RADIUS POINT OF EACH STREET RETURN EXCEPT WHERE ONE OR BOTH ENDS WOULD INCLUDE STOP BARS.

Ⓓ THE SKIP-DASH PAVEMENT MARKINGS 1 OR 7 SHOULD BE CENTERED BETWEEN BOTH ENDS OF EACH CITY BLOCK AND SHALL BE PLACED SO THEY LINE UP ACROSS FROM EACH OTHER. SEE EXAMPLE ON SHEET 2 OF 3.

Ⓔ USE LARGE ARROW SIZE FOR BOTH RURAL AND URBAN LOCATIONS. (SEE LAST PAGE OF SECTION 780x FOR SYMBOLS TABLE)

BLOOMINGTON–NORMAL CITY LIMITS ONLY

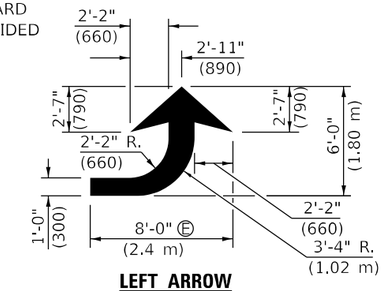

LEFT ARROW
REVERSE FOR RIGHT ARROW
AREA = 15.6 SQ. FT. (1.47 m^2)
(WHITE)

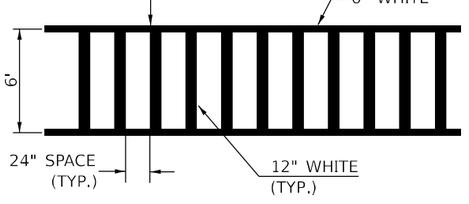

TYPICAL SPACING FOR CROSSWALKS & STOP BARS

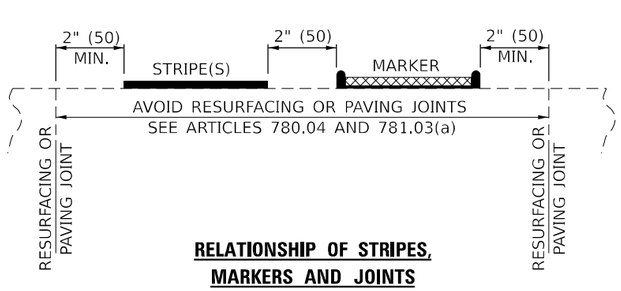

RELATIONSHIP OF STRIPES, MARKERS AND JOINTS

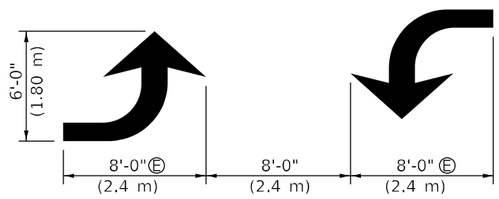

TYPICAL DOUBLE TURN ARROWS (WHITE)

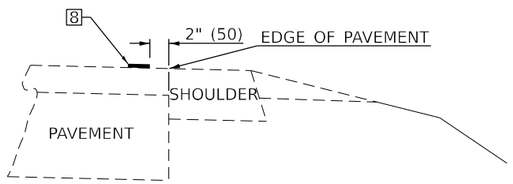

RELATIONSHIP OF EDGE LINE TO EDGE OF PAVEMENT
(SAFETY SHOULDER OR PAVED SURFACE)
SEE ARTICLE 780.04

Note: All dimensions are in INCHES (millimeters) unless otherwise shown.

MODEL: Detail Sheet -district 5-3
FILE NAME: V:\4216 - IL 9 Bloomington\CADD\CADD Sheets\D5T0855-sht-detail-1.dgn

USER NAME = BDeCraene	DESIGNED -	REVISED -	9/2009 KJT
	DRAWN -	REVISED -	4/2014 JLA
PLOT SCALE = 0.16666633 ' / in.	CHECKED -	REVISED -	3/2019 SWN
PLOT DATE = 10/17/2023	DATE -	REVISED -	8/2022 JLA

STATE OF ILLINOIS
DEPARTMENT OF TRANSPORTATION

PAVEMENT MARKING AND MARKERS
(RURAL & URBAN APPLICATIONS)

SCALE: | SHEET 2 OF 4 SHEETS | STA. | TO STA.

DISTRICT 5 DETAIL NO. 7800AAAA

F.A.P. RTE.	SECTION	COUNTY	TOTAL SHEETS	SHEET NO.
693	(129)RS-4	McLEAN	218	172
		CONTRACT NO. 70855		
	ILLINOIS FED. AID PROJECT			

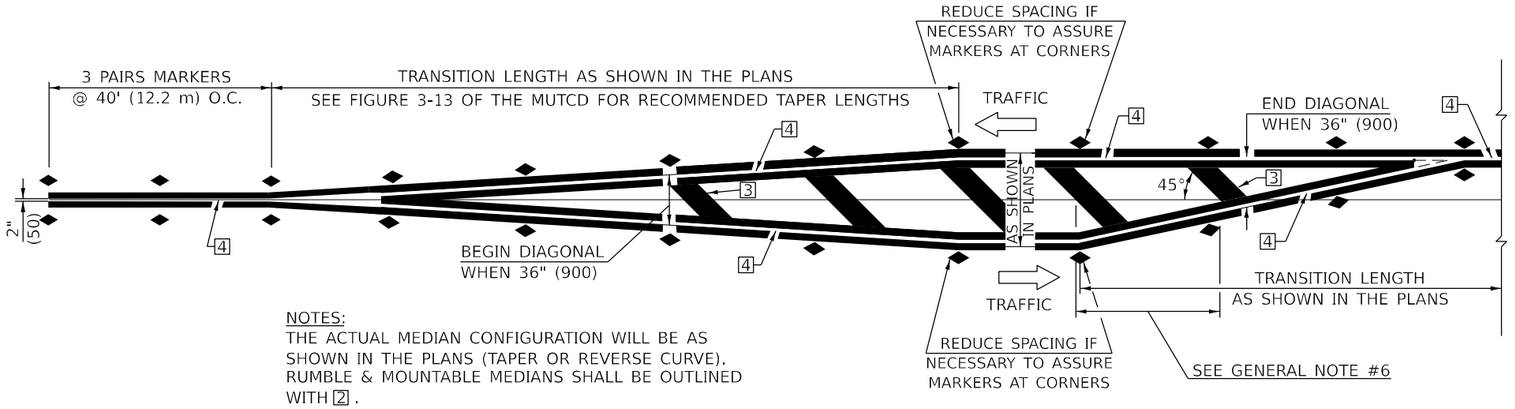

NOTES:
THE ACTUAL MEDIAN CONFIGURATION WILL BE AS SHOWN IN THE PLANS (TAPER OR REVERSE CURVE). RUMBLE & MOUNTABLE MEDIANS SHALL BE OUTLINED WITH 2 .

TYPICAL MEDIAN TRANSITIONS

GENERAL NOTES

1. WHEN MEDIANS ARE PRESENT, PAVEMENT MARKINGS ARE TO BE PLACED ADJACENT TO MEDIANS.
2. SOME OF THE INFORMATION INCLUDED WITH THIS DETAIL MAY NOT BE APPLICABLE TO THIS IMPROVEMENT.
3. PAVEMENT MARKINGS ARE TO BE EXTENDED THROUGH OMISSIONS WHEN APPLICABLE.
4. A STRIPING KEY IS AVAILABLE ELSEWHERE AND SHALL BE SHOWN WHERE THE QUANTITIES ARE LISTED.
5. FINAL PAVEMENT MARKINGS SHALL BE IN PLACE PRIOR TO PLACING ANY RAISED REFLECTIVE PAVEMENT MARKERS.
6. THE FOLLOWING CRITERIA SHALL BE USED FOR SELECTING THE DIAGONAL PAVEMENT MARKING SPACING,
   <30 MPH USE 15' (<50 km/h USE 4.5 m)
   30-45 MPH USE 20' (50-75 km/h USE 6.0 m)
   >45 MPH USE 30' (>75 km/h USE 9.0 m)

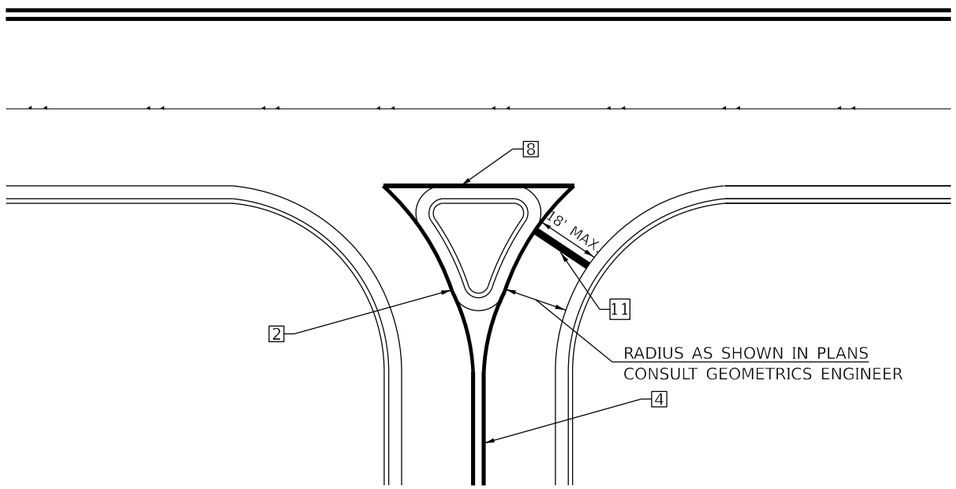

RIGHT IN – RIGHT OUT ACCESS

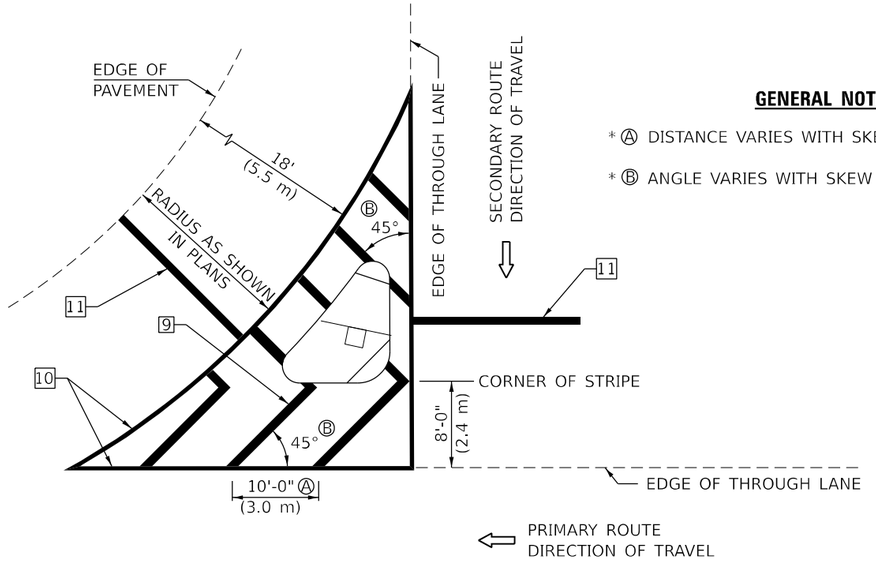

GENERAL NOTES

* Ⓐ DISTANCE VARIES WITH SKEW OF INTERSECTION.
* Ⓑ ANGLE VARIES WITH SKEW OF INTERSECTION.

ISLAND

* FOR RIGHT TURN LANE AND ISLAND STRIPING CONSULT GEOMETRICS ENGINEER.

Note: All dimensions are in INCHES (millimeters) unless otherwise shown.

DISTRICT 5 DETAIL NO. 7800AAAA

F.A.P. RTE.	SECTION	COUNTY	TOTAL SHEETS	SHEET NO.
693	(129)RS-4	McLEAN	218	173
		CONTRACT NO. 70855		
	ILLINOIS	FED. AID PROJECT		

USER NAME = BDeCraene	DESIGNED -	REVISED -	9/2009 KJT
	DRAWN -	REVISED -	4/2014 JLA
PLOT SCALE = 0.16666633 ' / in.	CHECKED -	REVISED -	3/2019 SWN
PLOT DATE = 10/17/2023	DATE -	REVISED -	8/2022 JLA

STATE OF ILLINOIS
DEPARTMENT OF TRANSPORTATION

PAVEMENT MARKING AND MARKERS
(RURAL & URBAN APPLICATIONS)

SCALE: | SHEET 3 OF 4 SHEETS | STA. | TO STA.

MODEL: Detail Sheet -district 5-4
FILE NAME: V:\4216 - IL 9 Bloomington\CADD\CADD Sheets\D2706855-sht-detail-1.cdgn

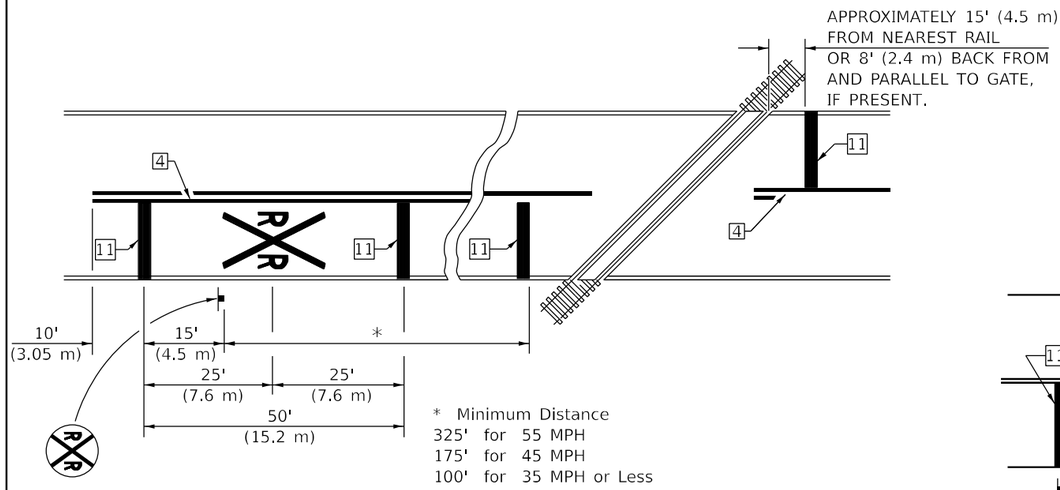

PAVEMENT MARKINGS AT
RAILROAD–HIGHWAY GRADE CROSSING

RAILROAD CROSSING WITH INTERCONNECT ONLY

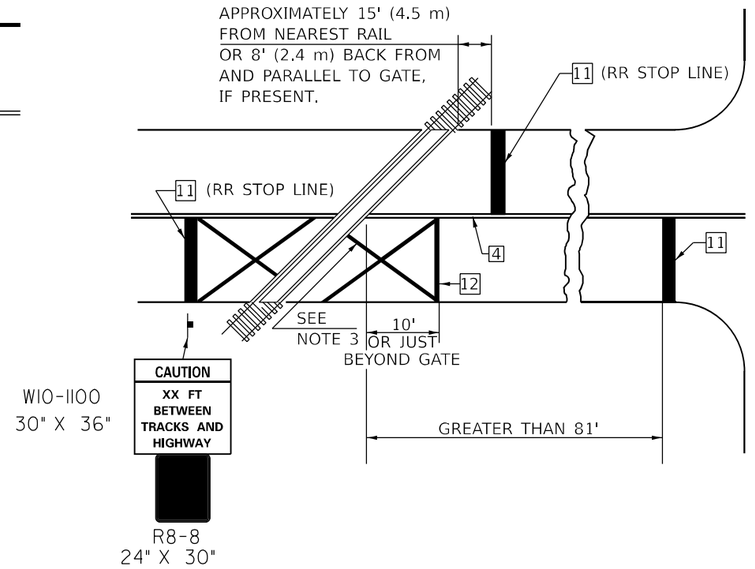

RAILROAD CROSSING WITH INTERCONNECT
AND PRE–SIGNALS

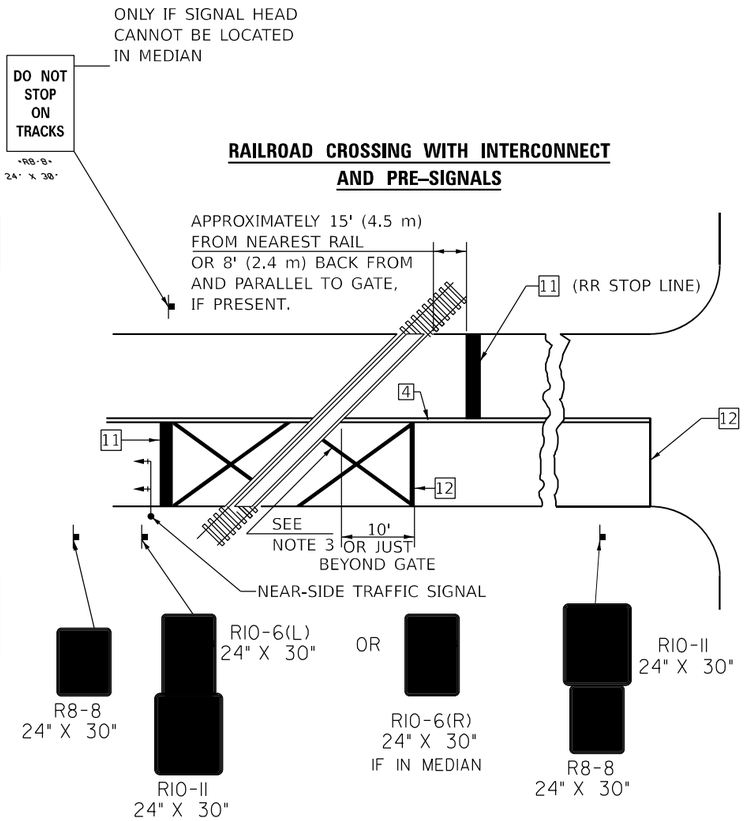

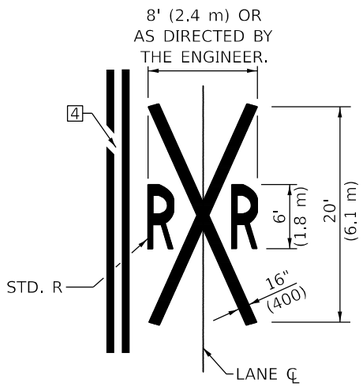

GENERAL NOTES

1. SUPPLEMENTAL PAVEMENT MARKINGS TO BE INSTALLED ONLY ON APPROACHES TO INTERSECTIONS CONTROLLED BY TRAFFIC SIGNALS WHICH ARE INTERCONNECTED WITH THE RAILROAD WARNING SIGNALS.

2. EXTEND PAVEMENT MARKINGS TO THE INTERSECTION ONLY WHERE NEAR-SIDE TRAFFIC SIGNALS ARE USED.

3. 6" WHITE PAVEMENT MARKINGS AT 45° TO PAVEMENT, 8' CENTER TO CENTER.

4. XX DISTANCE TO BE SHOWN ON SIGN MEASURED FROM A POINT 6 FEET FROM THE RAIL CLOSEST TO THE INTERSECTION OR FROM THE CLOSEST POINT ALONG THE EXIT GATE IF PRESENT OVER THE ROADWAY WHEN IN THE LOWERED POSITION TO THE STOP BAR OR CROSSWALK, WHICH EVER IS CLOSEST, ROUNDED DOWN TO NEAREST 5 FEET. WHERE THERE IS NO STOP LINE, MEASURE TO POINT WHERE DRIVER HAS A VIEW OF APPROACHING TRAFFIC.

5. THE CLEARANCE SIGN IS ALSO TO BE USED AS AN INTERIM MEASURE AT LOCATIONS WITH INTERCONNECTED INTERSECTION TRAFFIC SIGNALS WHERE IT IS PLANNED TO CHANGE THEM TO NEAR-SIDE SIGNALS AT A FUTURE TIME. IN THIS CASE, THE DISTANCE TO BE SHOWN ON THE SIGN IS MEASURED FROM THE EDGE OF THE STRIPED-OUT AREA INSTEAD OF 6 FEET FROM THE RAIL. THE SIGN IS TO BE REMOVED WHEN THE NEAR-SIDE SIGNALS ARE INSTALLED AND THE PAVEMENT MARKINGS EXTENDED TO THE INTERSECTION.

SUPPLEMENTAL PAVEMENT MARKING TREATMENT FOR
RAILROAD–HIGHWAY GRADE CROSSING

ALTERNATE SIGNS

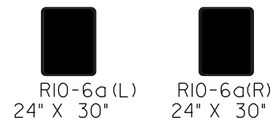

NOTES

THE TRAVERSE SPREAD OF THE "X" MAY VARY ACCORDING TO LANE WIDTH.

ON MULTI-LANE ROADS, THE STOP LINES SHALL EXTEND ACROSS ALL APPROACH LANES AND SEPARATE RXR SYMBOLS SHALL BE PLACED ADJACENT TO EACH OTHER IN EACH LANE.

WHEN THE PAVEMENT MARKING SYMBOL IS USED, A PORTION OF THE SYMBOL SHOULD BE LOCATED DIRECTLY ADJACENT TO THE ADVANCE WARNING SIGN (W10-1) AS PLACED BY TABLE II-1, CONDITION B OF THE MUTCD.

Note: All dimensions are in INCHES (millimeters) unless otherwise shown.

DISTRICT 5 DETAIL NO. 7800AAAA

USER NAME = BDeCraene	DESIGNED -	REVISED - 9/2009 KJT	
	DRAWN -	REVISED - 4/2014 JLA	
PLOT SCALE = 0.16666633 ' / in.	CHECKED -	REVISED - 3/2019 SWN	
PLOT DATE = 10/17/2023	DATE -	REVISED - 8/2022 JLA	

STATE OF ILLINOIS
DEPARTMENT OF TRANSPORTATION

PAVEMENT MARKING AND MARKERS
(RURAL & URBAN APPLICATIONS)

SCALE: | SHEET 4 OF 4 SHEETS | STA. | TO STA.

F.A.P. RTE.	SECTION	COUNTY	TOTAL SHEETS	SHEET NO.
693	(129)RS-4	McLEAN	218	174
		CONTRACT NO. 70855		
	ILLINOIS FED. AID PROJECT			

MODEL: Detail Sheet -district 5-5
FILE NAME: V:\4216 - IL 9 Bloomington\CADD\C4DD Sheets\D570855-sht-detail-1.dgn

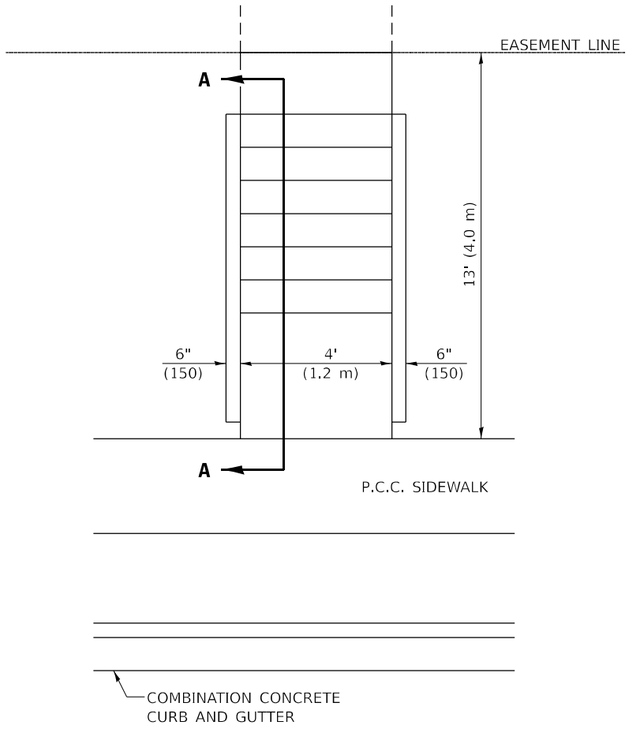

PLAN

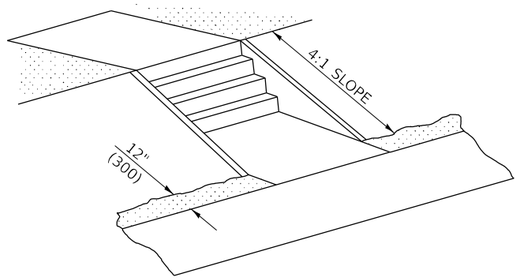

ISOMETRIC

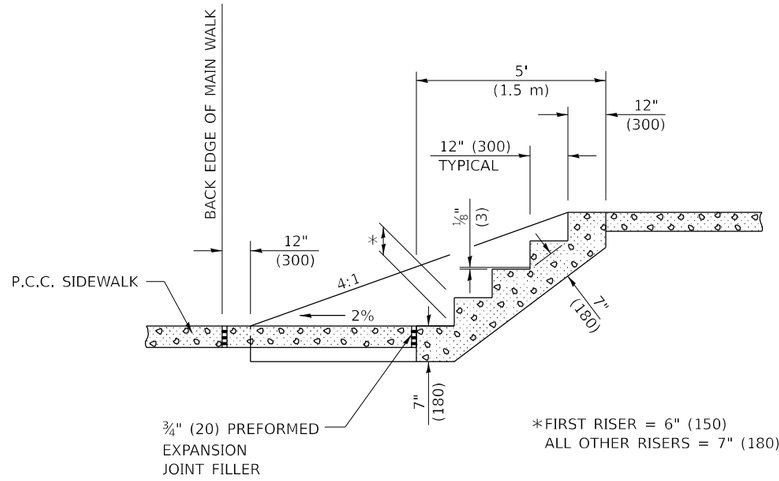

SECTION A–A

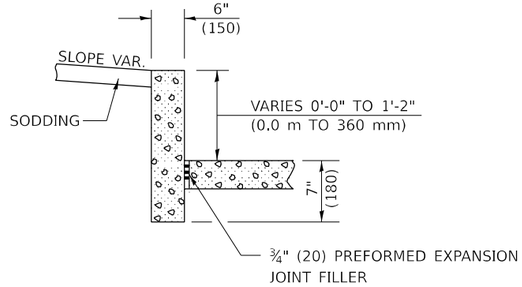

SECTION THROUGH WALL

GENERAL NOTES

1. CLASS SI CONCRETE SHALL BE USED THROUGHOUT.

2. THIS WORK WILL BE PAID FOR AT THE CONTRACT UNIT PRICE PER CUBIC YARD (CUBIC METER) FOR CLASS SI CONCRETE (MISCELLANEOUS) WHICH PRICE SHALL BE PAYMENT IN FULL FOR ALL MATERIAL AND LABOR, INCLUDING EXCAVATION AND PREFORMED EXPANSION JOINT FILLER TO COMPLETE THE WORK. NO WELDED WIRE FABRIC IS REQUIRED.

ESTIMATED QUANTITY

2.1 CU. YD. (1.6 m^3) CLASS SI CONCRETE (MISCELLANEOUS)

Note: All dimensions are in INCHES (millimeters) unless otherwise shown.

DISTRICT 5 DETAIL NO. X0325279

USER NAME = BDeCraene	DESIGNED -	REVISED - 11/06	
	DRAWN -	REVISED -	
PLOT SCALE = 0.16666633 ' / in.	CHECKED -	REVISED -	
PLOT DATE = 10/17/2023	DATE -	REVISED -	

STATE OF ILLINOIS
DEPARTMENT OF TRANSPORTATION

PORTLAND CEMENT CONCRETE SIDEWALK, STEPS

SCALE: | SHEET 1 OF 1 SHEETS | STA. | TO STA.

F.A.P. RTE.	SECTION	COUNTY	TOTAL SHEETS	SHEET NO.
693	(129)RS-4	McLEAN	218	175
		CONTRACT NO. 70855		
	ILLINOIS	FED. AID PROJECT		

MODEL: Detail Sheet -district 5-6
FILE NAME: V:\4216 - IL 9 Bloomington\CADD\CADD Sheets\D570855-sht-detail-1.cdgn

XZ193300 – SURVEY MARKER, TYPE 1 (SPECIAL)

TO BE INSTALLED IN FLEXIBLE PAVEMENT OR SHOULDER, BITUMINOUS TREATED SURFACE AND TURF AREAS WITHIN THE RIGHT-OF-WAY FOR PRESERVING PERMANENT SURVEY MARKERS (PI'S, PT'S, PC'S, POC'S, & POT'S)

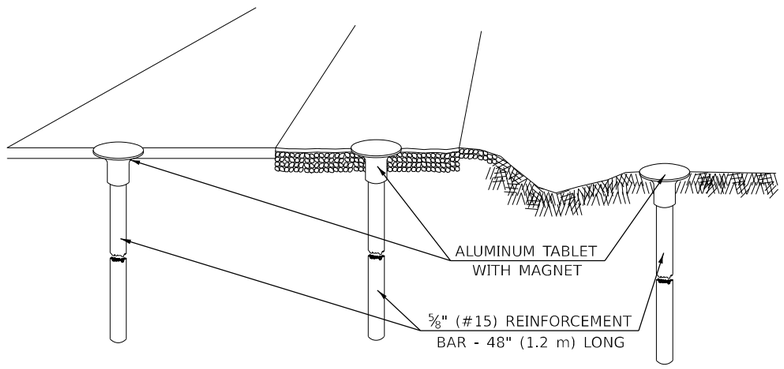

IN FLEXIBLE PAVEMENT OR SHOULDER | IN BITUMINOUS TREATED SURFACE | IN TURF AREAS WITHIN R.O.W.

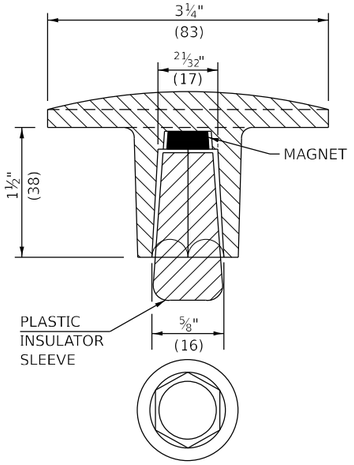

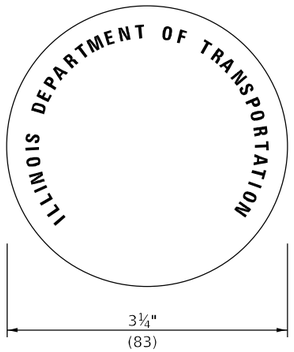

THE DIMENSIONS SHOWN SHALL BE EXACT, OTHERS MAY VARY, BUT SHALL BE SHOWN ON SHOP DRAWINGS.

GENERAL NOTES

1. THE CONTRACT UNIT PRICE, EACH, FOR SURVEY MARKER, TYPE 1 (SPECIAL) SHALL BE PAYMENT IN FULL FOR FURNISHING THE REINFORCEMENT BAR AND ALUMINUM TABLET AND FOR ALL LABOR AND MATERIAL REQUIRED TO SET THE MARKER IN PLACE.
2. ALL SURVEY MARKERS, TYPE 1 (SPECIAL) SHALL BE PLACED ±1/4" (6 mm) BELOW THE FINAL SURFACE.
3. WHEN THE TABLET AND REBAR ARE PLACED AS PART OF A SURVEY MARKER VAULT, THEY SHALL BE CONSIDERED AS INCLUDED IN THAT PAY ITEM AND THERE WILL BE NO PAYMENT FOR THE SURVEY MARKER, TYPE 1 (SPECIAL).

SPECIFICATIONS FOR ALUMINUM TABLET

SURVEY CAP FOR REBAR. 3¼" (83 mm) CONVEX SURVEY CAP FOR ⅝" (15 mm) REBAR WITH ILLINOIS DEPARTMENT OF TRANSPORTATION LOGO. THIS LOGO SHALL PROVIDE LETTERS RECESSED INTO THE SURFACE A MINIMUM OF 1/32" (0.8 mm) FOR EASY AND LONG-TERM LEGIBILITY. THE ALUMINUM CAP FOR REBAR SHALL BE PRODUCED BY THE PROCESS OF ORBITAL FORGING TO PRODUCE A HIGH-STRENGTH AND DURABLE MARKER CAP WHICH WILL NOT CHIP OR BREAK AND PROVIDE A SMOOTH FINISH FOR STAMPING OF DATA IN THE FIELD. THE ALUMINUM CAP FOR REBAR SHALL BE TAPERED FOR A PERFECT COMPRESSION FIT. A SPECIAL PLASTIC INSULATOR SHALL BE INSTALLED TO PREVENT DISSIMILAR METAL CONTACT AND CORROSION. THE PLASTIC INSULATOR SHALL FORM READILY TO THE OUTER SHAPE OF THE REBAR AND TO THE INNER SHAPE OF THE ALUMINUM CAP SOCKET. THE PLASTIC INSULATOR SHALL BE LOW DENSITY POLYETHYLENE, A MINIMUM 1½" (38 mm) LONG AND CONFORM TO FEDERAL SPECIFICATION L-P 390.

COMPOSITION: ALUMINUM 98.3-98.7%; OTHER 1.3-1.7%; STRENGTH: YIELD 28 KSI (193 MPa), ULTIMATE 32 KSI (221 MPa). ELONGATION 15% [IN 2" (50 mm)]. SPECIFICATIONS: ALUMINUM ALLOY 6101-0; ASTM B317-83 (EXCEPT TEMPER) AS FORGED. NO EXCEPTIONS.

SPECIFICATIONS FOR REBAR

REBAR FOR ALUMINUM TABLET. REINFORCEMENT BAR SHALL BE ⅝" (#15) X 48" (1.2 m) (DEFORMED).

INSPECTION OF REINFORCEMENT BAR ⅝" (#15) SHALL BE DONE BY DISTRICT PERSONNEL OF THE ILLINOIS DEPARTMENT OF TRANSPORTATION, DIVISION OF HIGHWAYS.

XZ193400 – SURVEY MARKER, TYPE 2 (SPECIAL)

TO BE INSTALLED IN RIGID OR COMPOSITE PAVEMENT FOR PRESERVING PERMANENT SURVEY MARKERS (PI'S, PT'S, PC'S, POC'S, & POT'S)

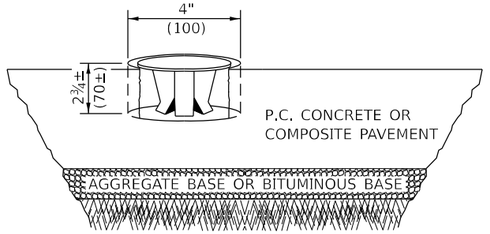

SPECIFICATIONS FOR ALUMINUM TABLET (FORKED)

ALUMINUM TABLET (FORKED) FOR USE WITH "SURVEY MARKER, TYPE 2, (SPECIAL)" SHALL BE AS SHOWN ON THE DETAIL FOR THE 3¼" (83 mm) CONVEX SURVEY TABLET WITH ILLINOIS DEPARTMENT OF TRANSPORTATION LOGO. THIS LOGO SHALL PROVIDE FOR LETTERS RECESSED INTO THE SURFACE A MINIMUM OF 1/32" (0.8 mm) FOR EASY AND LONG-TERM LEGIBILITY. THE ALUMINUM TABLET SHALL BE PRODUCED BY THE PROCESS OF ORBITAL FORGING TO PRODUCE A HIGH-STRENGTH AND DURABLE MARKER CAP WHICH WILL NOT CHIP OR BREAK AND PROVIDE A SMOOTH FINISH FOR STAMPING OF DATA IN THE FIELD. THE ALUMINUM TABLET SHALL BE DESIGNED NOT TO TURN OR ROTATE. THREE PRONGS ON A 2½" (63 mm) STEM SHALL BE SUCH THAT THE ALUMINUM TABLET CANNOT BE EASILY REMOVED.

COMPOSITION: ALUMINUM 92-93%; MAGNESIUM 6.5-7.5%. STRENGTH: YIELD 19,000-21,000 PSI (131-145 MPa); TENSILE 38,000-44,000 PSI (262-303 MPa); ELONGATION 10-15% [IN 2" (50 mm)]. SPECIFICATIONS: ALLOY 535.0; QQ-A-601ES. NO EXCEPTIONS.

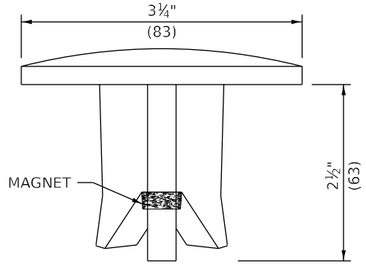

SIDE VIEW

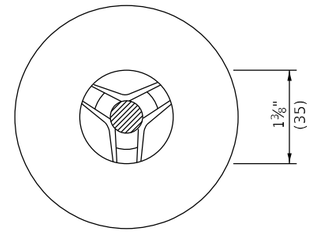

BOTTOM VIEW

THE DIMENSIONS SHOWN SHALL BE EXACT, OTHERS MAY VARY, BUT SHALL BE SHOWN ON SHOP DRAWINGS.

GENERAL NOTES

1. WORK ON THIS ITEM SHALL NOT START UNTIL THE FINAL SURFACE IS COMPLETED.
2. THE ALUMINUM TABLET (FORKED) SHALL REST UPON THE BOTTOM OF THE 4" (100 mm) CORE HOLE. IF THE HOLE IS TOO DEEP, EPOXY GROUT MUST BE USED TO DECREASE THE DEPTH AND ALLOWED TO HARDEN BEFORE PROCEEDING.
3. THE ALUMINUM TABLET SHALL BE ANCHORED IN THE 4" (100 mm) DIAMETER HOLE IN THE NEW PAVEMENT WITH TWO-COMPONENT EPOXY CONFORMING TO APPLICABLE PORTIONS OF ARTICLE 1025.01 OF THE STANDARD SPECIFICATIONS.
4. THE 4" (100 mm) CORE HOLE SHALL BE SUBJECT TO THE APPROVAL OF THE ENGINEER.
5. THE CONTRACT PRICE, EACH, FOR SURVEY MARKER, TYPE 2 (SPECIAL) SHALL BE PAYMENT IN FULL FOR FURNISHING THE ALUMINUM TABLET AND FOR ALL LABOR AND MATERIAL REQUIRED TO SET THE MARKER IN PLACE, AS SPECIFIED, INCLUDING CORING THE NEW PAVEMENT.
6. ALL SURVEY MARKERS, TYPE 2 (SPECIAL) SHALL BE PLACED ± 1/4" (6 mm) BELOW THE FINAL SURFACE.

Note: All dimensions are in INCHES (millimeters) unless otherwise shown.

DISTRICT 5 DETAIL NO. XZ193AAA

USER NAME = BDeCraene	DESIGNED -	REVISED -	11/06
	DRAWN -	REVISED -	11/10
PLOT SCALE = 0.16666633 ' / in.	CHECKED -	REVISED -	
PLOT DATE = 10/17/2023	DATE -	REVISED -	

STATE OF ILLINOIS
DEPARTMENT OF TRANSPORTATION

SURVEY MARKERS TYPE 1 & 2 (SPECIAL)

SCALE: | SHEET OF SHEETS | STA. | TO STA.

F.A.P. RTE.	SECTION	COUNTY	TOTAL SHEETS	SHEET NO.
693	(129)RS-4	McLEAN	218	176
		CONTRACT NO. 70855		
	ILLINOIS FED. AID PROJECT			

MODEL: Detail Sheet -district 5-7
FILE NAME: V:\4216 - IL 9 Bloomington\CADD\CADD Sheets\D570855-sht-detail-1.dgn

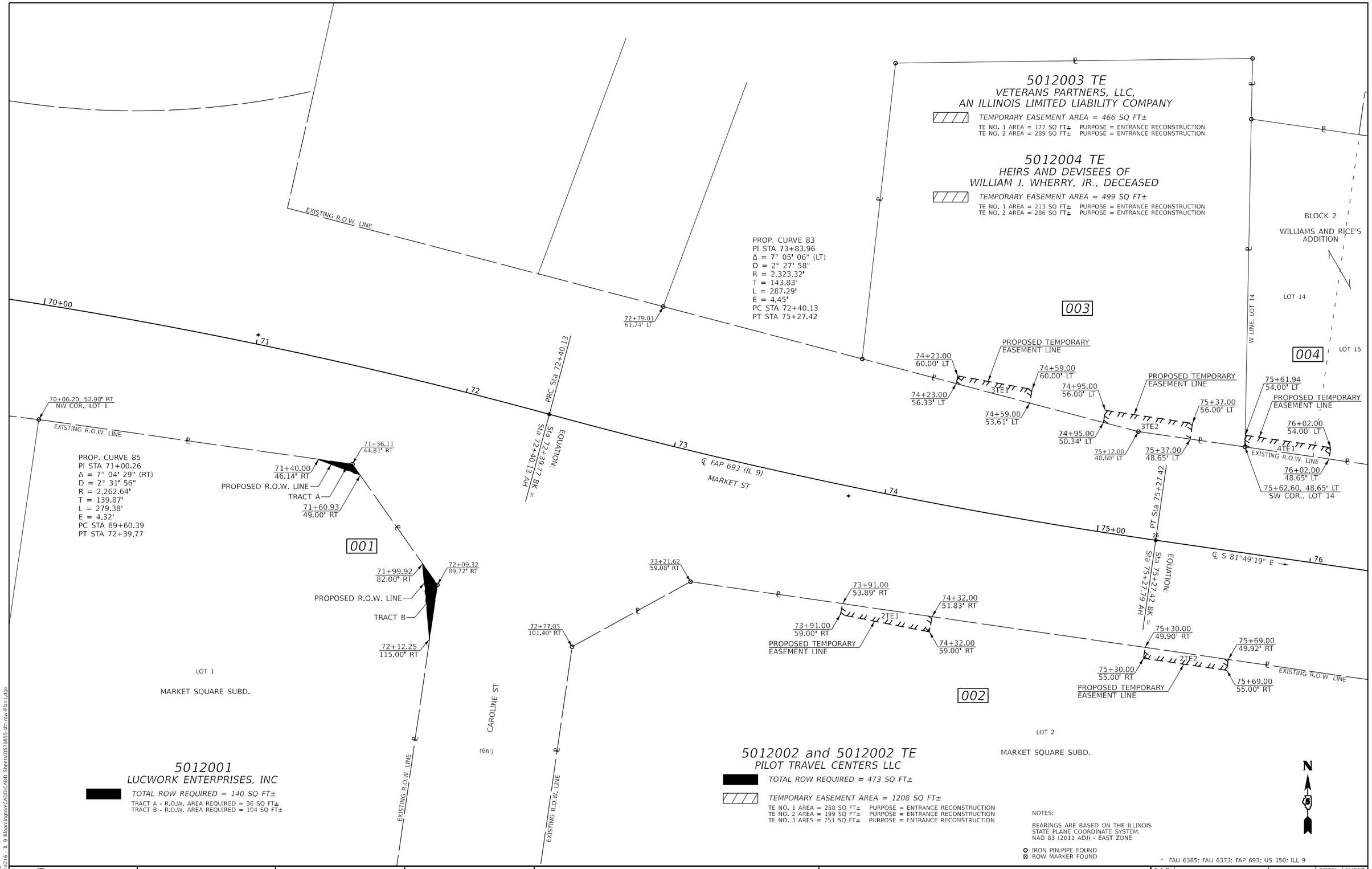

MODEL: Default
FILE NAME: V:\4216 - IL 9 Bloomington\CADD\CADD Sheets\D570855-sht-row-Plan1.dgn

Hutchison Engineering, Inc.	USER NAME = BDeCraene	DESIGNED -	REVISED -
		DRAWN -	REVISED -
	PLOT SCALE = 40.00 ' / in.	CHECKED -	REVISED -
	PLOT DATE = 10/17/2023	DATE -	REVISED -

STATE OF ILLINOIS
DEPARTMENT OF TRANSPORTATION

RIGHT OF WAY PLANS

	PROJECT	JOB NO. R-95-001-20
SCALE: 1" = 20'	SHEET 1 OF 5 SHEETS	STA. 70+00.00 TO STA. 76+00.00

F.A.P. RTE.	SECTION	COUNTY	TOTAL SHEETS	SHEET NO.
*	(129)RS-4	MCLEAN	218	177
		CONTRACT NO. 70855		
FED. ROAD DIST. NO.	ILLINOIS	FED. AID PROJECT		

5012004 TE
HEIRS AND DEVISEES OF WILLIAM J. WHERRY, JR., DECEASED

TEMPORARY EASEMENT AREA = 499 SQ FT±

TE NO. 1 AREA = 213 SQ FT± PURPOSE = ENTRANCE RECONSTRUCTION
TE NO. 2 AREA = 286 SQ FT± PURPOSE = ENTRANCE RECONSTRUCTION

5012005 TE
THE TRUSTEE OF THE
JAMES LEE TOBIN FAMILY TRUST

TEMPORARY EASEMENT AREA = 90 SQ FT±

TE PURPOSE = ENTRANCE RECONSTRUCTION

5012006 TE
VISION PROPERTY SERVICE, LLC,
AN ILLINOIS LIMITED LIABILITY COMPANY

TEMPORARY EASEMENT AREA = 164 SQ FT±

TE NO. 1 AREA = 17 SQ FT± PURPOSE = ENTRANCE RECONSTRUCTION
TE NO. 2 AREA = 147 SQ FT± PURPOSE = ENTRANCE RECONSTRUCTION

5012007 TE
MICHAEL A. MILES

TEMPORARY EASEMENT AREA = 276 SQ FT±

TE NO. 1 AREA = 37 SQ FT± PURPOSE = ENTRANCE RECONSTRUCTION
TE NO. 2 AREA = 210 SQ FT± PURPOSE = ENTRANCE RECONSTRUCTION
TE NO. 3 AREA = 29 SQ FT± PURPOSE = ENTRANCE RECONSTRUCTION

5012008 TE
DAVID J. REINEKE and
KAREN C. REINEKE, AS JOINT TENANTS

TEMPORARY EASEMENT AREA = 104 SQ FT±

TE PURPOSE = ENTRANCE RECONSTRUCTION

5012009 TE
SANDRA K. STEPHENSON
and LINDA S. FAGERBURG

TEMPORARY EASEMENT AREA = 211 SQ FT±

TE PURPOSE = ENTRANCE RECONSTRUCTION

5012010 TE
JENNIFER BOOLMAN and MARK BOOLMAN

TEMPORARY EASEMENT AREA = 183 SQ FT±

TE NO. 1 AREA = 39 SQ FT± PURPOSE = ENTRANCE RECONSTRUCTION
TE NO. 2 AREA = 144 SQ FT± PURPOSE = ENTRANCE RECONSTRUCTION

5012011 TE
TVEO CORP

TEMPORARY EASEMENT AREA = 514 SQ FT±

TE PURPOSE = GRADING & ENTRANCE RECONSTRUCTION

5012002 and 5012002 TE
PILOT TRAVEL CENTERS LLC

TOTAL ROW REQUIRED = 473 SQ FT±

TEMPORARY EASEMENT AREA = 1208 SQ FT±

TE NO. 1 AREA = 258 SQ FT± PURPOSE = ENTRANCE RECONSTRUCTION
TE NO. 2 AREA = 199 SQ FT± PURPOSE = ENTRANCE RECONSTRUCTION
TE NO. 3 ARES = 751 SQ FT± PURPOSE = ENTRANCE RECONSTRUCTION

5012013 TE
MBR BLOOMINGTON/NORMAL PROPERTY, LLC,
A MISSOURI LIMITED LIABILITY COMPANY

TEMPORARY EASEMENT AREA = 69 SQ FT±

TE PURPOSE = ENTRANCE RECONSTRUCTION

5012014 TE
DAVID W. FEDOR, AS SUCCESSOR TRUSTEE
TO THE PEOPLES BANK AS TRUSTEE UNDER
THE PROVISIONS OF A TRUST AGREEMENT
DATED THE 22ND DAY OF SEPTEMBER, 1988
KNOWN AS TRUST NUMBER PBB-176

TEMPORARY EASEMENT AREA = 611 SQ FT±

TE PURPOSE = ENTRANCE RECONSTRUCTION

* FAU 6385; FAU 6373; FAP 693; US 150; ILL 9

MODEL: Default
FILE NAME: V:\4216 - IL 9 Bloomington\CADD\CADD Sheets\D570855-plt-row-Plan2.dgn

Hutchison Engineering, Inc.	USER NAME = BDeCraene	DESIGNED -	REVISED -
		DRAWN -	REVISED -
	PLOT SCALE = 40.0000 ' / in.	CHECKED -	REVISED -
	PLOT DATE = 10/17/2023	DATE -	REVISED -

STATE OF ILLINOIS
DEPARTMENT OF TRANSPORTATION

RIGHT OF WAY PLANS

	PROJECT	JOB NO. 95-001-20
SCALE: 1" = 20'	SHEET 2 OF 5 SHEETS	STA. 76+00.00 TO STA. 82+00.00

F.A.P. RTE.	SECTION	COUNTY	TOTAL SHEETS	SHEET NO.
*	(129)RS-4	MCLEAN	218	178
		CONTRACT NO. 70855		
FED. ROAD DIST. NO.	ILLINOIS	FED. AID PROJECT		

5012012 TE
NORFOLK SOUTHERN RAILWAY COMPANY

TEMPORARY EASEMENT AREA = 192 SQ FT±
TE PURPOSE = GRADING

5012016 and 5012016 TE
NADINE SILA

TOTAL ROW REQUIRED = 963 SQ FT±

TEMPORARY EASEMENT AREA = 487 SQ FT±
TE PURPOSE = ENTRANCE RECONSTRUCTION

5012019 and 5012019 TE
KELLY BEVERLY

TOTAL ROW REQUIRED = 302 SQ FT±

TEMPORARY EASEMENT AREA = 366 SQ FT±
TE NO. 1 AREA = 288 SQ FT± PURPOSE = ENTRANCE RECONSTRUCTION
TE NO. 2 AREA = 78 SQ FT± PURPOSE = ENTRANCE RECONSTRUCTION

5012021 and 5012021 TE
MARY BETH TOBIN

TOTAL ROW REQUIRED = 133 SQ FT±

TEMPORARY EASEMENT AREA = 547 SQ FT±
TE PURPOSE = GRADING, SIDEWALK & ENTRANCE RECONSTRUCTION

5012017
NADINE SILA

TOTAL ROW REQUIRED = 162 SQ FT±

5012020 and 5012020 TE
JOHN C. BLAKENEY and THERESA BLAKENEY

TOTAL ROW REQUIRED = 140 SQ FT±

TEMPORARY EASEMENT AREA = 394 SQ FT±
TE PURPOSE = GRADING, SIDEWALK & ENTRANCE RECONSTRUCTION

5012022 and 5012022 TE
EMILY G. MORRIS

TOTAL ROW REQUIRED = 126 SQ FT±

TEMPORARY EASEMENT AREA = 628 SQ FT±
TE PURPOSE = GRADING, SIDEWALK & ENTRANCE RECONSTRUCTION

5012023 and 5012023 TE
APOLINAR SOTELO and ELVIRA SOTELO, AS JOINT TENANTS

TOTAL ROW REQUIRED = 119 SQ FT±

TEMPORARY EASEMENT AREA = 500 SQ FT±
TE PURPOSE = GRADING, SIDEWALK & ENTRANCE RECONSTRUCTION

5012018 and 5012018 TE
CLINT NORD and DIANE NORD, AS TENANTS BY THE ENTIRETY

TOTAL ROW REQUIRED = 371 SQ FT±

TEMPORARY EASEMENT AREA = 500 SQ FT±
TE PURPOSE = GRADING & ENTRANCE RECONSTRUCTION

5012027 and 5012027 TE
HOUSING AUTHORITY OF THE CITY OF BLOOMINGTON, A MUNICIPAL CORPORATION

TOTAL ROW REQUIRED = 2256 SQ FT±

TEMPORARY EASEMENT AREA = 2055 SQ FT±
TE PURPOSE = GRADING, SIDEWALK & ENTRANCE RECONSTRUCTION

PROP. CURVE WHITE_OAK1
PI STA 201+61.99
Δ = 13° 29' 47" (LT)
D = 22° 55' 06"
R = 250.00'
T = 29.58'
L = 58.89'
E = 1.74'
PC STA 201+32.41
PT STA 201+91.30

PT Sta 201+91.30
PC Sta 201+32.41
PI STA 82+52.99
179°01'27"
105°
℄ S 81°49'19" E
℄ S 82°47'51" E
℄ N 07°47'51" W
℄ WHITE OAK DRIVE
℄ FAP 693 (IL 9)
MARKET ST
83+48.94 (IL 9) = 200+00.00 (WHITE OAK DR)
EXISTING R.O.W. LINE
PROPOSED R.O.W. LINE
PROPOSED TEMPORARY EASEMENT LINE
BLOCK 2
WILLIAMS AND RICE'S ADDITION
BLOCK 2
A.H. MOORE'S ADDITION
BLOCK 1
FAIRGROUND SUBDIVISION
SUB. N ½ SEC. 5
STILLWELL ST
(VAR)
LOT 27
LOT 13
LOT 12
LOT 11
LOT 10
LOT 9
LOT 8
LOT 7
LOT 6
LOT 5
LOT 2
LOT 1
LOT 17
LOT 18
012
016
017
018
019
020
021
022
023
027
201+89.00, 22.68' RT
NW COR., LOT 13
201+83.14
38.00' RT
201+71.00
23.00' RT
201+32.41
23.00' RT
201+18.50
23.00' RT
201+15.00
23.02' RT
201+13.20
40.00' RT
200+88.00
40.00' RT
200+81.00
24.81' RT
200+53.89
28.40' RT
83+72.00
48.74' LT
84+31.97
47.71' LT
83+61.20, 45.47' LT
200+40.74, 23.61' RT
SW COR., LOT 13
84+32.44, 44.44' LT
SE COR., LOT 13
SW COR., LOT 12
84+82.52
46.84' LT
84+82.97, 43.71' LT
SE COR., LOT 12
SW COR., LOT 11
85+12.59
57.00' LT
85+12.67
54.50' LT
85+10.00
54.50' LT
85+09.00
46.39' LT
19TE1
85+81.46
60.00' LT
85+36.00
57.00' LT
85+77.00
60.00' LT
85+37.50
45.90' LT
19TE2
85+77.50
45.21' LT
85+83.61
45.10' LT
85+84.02, 42.25' LT
SE COR., LOT 10
SW COR., LOT 9
85+93.00
60.00' LT
85+94.00
53.00' LT
86+14.00
53.00' LT
86+14.50
47.57' LT
86+34.11
44.23' LT
86+34.50, 41.52' LT
SE COR., LOT 9
SW COR., LOT 8
86+67.00
68.50' LT
86+69.00
54.00' LT
86+61.00
54.00' LT
86+58.00
46.82' LT
86+33.67
47.24' LT
86+84.60
43.36' LT
86+84.97, 40.79' LT
SE COR., LOT 8
SW COR., LOT 7
86+80.72
70.35' LT
86+93.00
72.00' LT
87+21.00
52.00' LT
86+96.00
52.00' LT
87+35.10
42.50' LT
87+35.45, 40.06' LT
SE COR., LOT 7
SW COR., LOT 6
87+70.86
66.50' LT
87+71.03
51.98' LT
87+21.00
46.74' LT
87+65.00
52.37' LT
87+34.52
46.51' LT
87+65.00
45.98' LT
87+85.60
41.63' LT
87+85.93, 39.34' LT
SE COR., LOT 6
SW COR., LOT 5
87+82.03
66.50' LT
87+84.00
66.50' LT
82+67.62
50.51' RT
83+74.59
48.49' RT
84+13.58
49.06' RT
84+57.98
41.70' RT
84+98.06, 24.27' RT
NE COR., LOT 1
84+99.74
42.30' RT
83+76.19
52.48' RT
83+85.00
52.30' RT
83+85.00
55.30' RT
84+27.00
54.46' RT
84+27.00
51.46' RT
85+00.18
47.00' RT
85+00.46
50.00' RT
85+62.72
41.00' RT
85+63.01
44.74' RT
85+63.24
47.74' RT
87+43.00
44.14' RT
87+43.00
48.02' RT
87+55.00
43.90' RT
87+55.00
48.28' RT
87+78.00
43.44' RT
87+78.00
48.76' RT
87+91.00
43.18' RT
87+91.00
49.04' RT
88+14.00
42.72' RT
88+14.00
49.53' RT
88+26.00
42.48' RT
88+26.00
49.78' RT
81+94.59
55.00' LT
82+25.00
55.00' LT
81+94.59
48.68' LT
82+25.00
48.68' LT
E LINE, LOT 13
W LINE, LOT 12
E LINE, LOT 12
W LINE, LOT 11
E LINE, LOT 11
W LINE, LOT 10
E LINE, LOT 10
W LINE, LOT 9
E LINE, LOT 9
W LINE, LOT 8
E LINE, LOT 8
W LINE, LOT 7
E LINE, LOT 7
W LINE, LOT 6
E LINE, LOT 6
W LINE, LOT 5
E LINE, LOT 1
W LINE, LOT 2
EXISTING R.O.W. LINE
R=273.00'
R=388.00'

* FAU 6385; FAU 6373; FAP 693; US 150; ILL 9

Hutchison Engineering, Inc.	USER NAME = BDeCraene	DESIGNED -	REVISED -	STATE OF ILLINOIS DEPARTMENT OF TRANSPORTATION	RIGHT OF WAY PLANS		
		DRAWN -	REVISED -				
	PLOT SCALE = 40.00 ' / in.	CHECKED -	REVISED -		PROJECT	JOB NO. R-95-001-20	
	PLOT DATE = 10/17/2023	DATE -	REVISED -		SCALE: 1" = 20'	SHEET 3 OF 5 SHEETS	STA. 82+00.00 TO STA. 88+00.00

F.A.P. RTE.	SECTION	COUNTY	TOTAL SHEETS	SHEET NO.
*	(129)RS-4	MCLEAN	218	179
		CONTRACT NO. 70855		
FED. ROAD DIST. NO.	ILLINOIS	FED. AID PROJECT		

MODEL: Default
FILE NAME: V:\4216 - IL 9 Bloomington\CADD\CADD Sheets\D570855-sht-rowPlan3.dgn

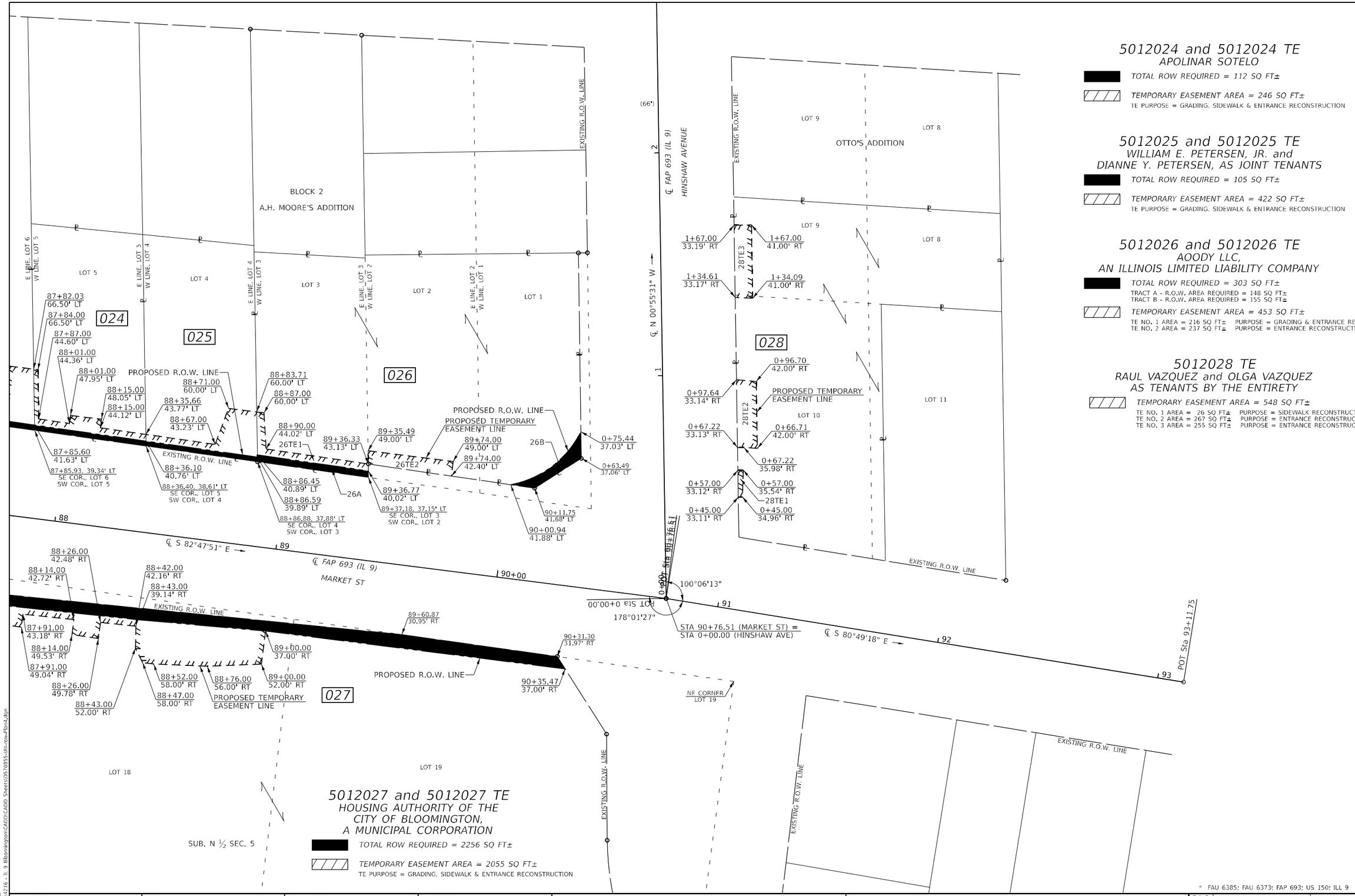

5012024 and 5012024 TE
APOLINAR SOTELO

TOTAL ROW REQUIRED = 112 SQ FT±

TEMPORARY EASEMENT AREA = 246 SQ FT±
TE PURPOSE = GRADING, SIDEWALK & ENTRANCE RECONSTRUCTION

5012025 and 5012025 TE
WILLIAM E. PETERSEN, JR. and DIANNE Y. PETERSEN, AS JOINT TENANTS

TOTAL ROW REQUIRED = 105 SQ FT±

TEMPORARY EASEMENT AREA = 422 SQ FT±
TE PURPOSE = GRADING, SIDEWALK & ENTRANCE RECONSTRUCTION

5012026 and 5012026 TE
AOODY LLC, AN ILLINOIS LIMITED LIABILITY COMPANY

TOTAL ROW REQUIRED = 303 SQ FT±
TRACT A - R.O.W. AREA REQUIRED = 148 SQ FT±
TRACT B - R.O.W. AREA REQUIRED = 155 SQ FT±

TEMPORARY EASEMENT AREA = 453 SQ FT±
TE NO. 1 AREA = 216 SQ FT± PURPOSE = GRADING & ENTRANCE RECONSTRUCTION
TE NO. 2 AREA = 237 SQ FT± PURPOSE = ENTRANCE RECONSTRUCTION

5012027 and 5012027 TE
HOUSING AUTHORITY OF THE CITY OF BLOOMINGTON, A MUNICIPAL CORPORATION

TOTAL ROW REQUIRED = 2256 SQ FT±

TEMPORARY EASEMENT AREA = 2055 SQ FT±
TE PURPOSE = GRADING, SIDEWALK & ENTRANCE RECONSTRUCTION

5012028 TE
RAUL VAZQUEZ and OLGA VAZQUEZ AS TENANTS BY THE ENTIRETY

TEMPORARY EASEMENT AREA = 548 SQ FT±
TE NO. 1 AREA = 26 SQ FT± PURPOSE = SIDEWALK RECONSTRUCTION
TE NO. 2 AREA = 267 SQ FT± PURPOSE = ENTRANCE RECONSTRUCTION
TE NO. 3 AREA = 255 SQ FT± PURPOSE = ENTRANCE RECONSTRUCTION

* FAU 6385; FAU 6373; FAP 693; US 150; ILL 9

MODEL: Default
FILE NAME: V:\4216 - IL 9 Bloomington\CADD\CADD Sheets\D5705855-rhi-row-Plan4.dgn

Hutchison Engineering, Inc.

USER NAME = BDeCraene	DESIGNED -	REVISED -
	DRAWN -	REVISED -
PLOT SCALE = 40.00 ' / in.	CHECKED -	REVISED -
PLOT DATE = 10/17/2023	DATE -	REVISED -

STATE OF ILLINOIS
DEPARTMENT OF TRANSPORTATION

RIGHT OF WAY PLANS

	PROJECT	JOB NO. R-95-001-20
SCALE: 1" = 20'	SHEET 4 OF 5 SHEETS	STA. 88+00.00 TO STA. 93+00.00

F.A.P. RTE.	SECTION	COUNTY	TOTAL SHEETS	SHEET NO.
*	(129)RS-4	MCLEAN	218	180
		CONTRACT NO. 70855		
FED. ROAD DIST. NO.	ILLINOIS	FED. AID PROJECT		

BLOCK 2

WILLIAMS AND RICE'S ADDITION

LOT 25

LOT 26

LOT 27

PROP. CURVE WHITE_OAK1
PI STA 201+61.99
Δ = 13° 29' 47" (LT)
D = 22° 55' 06"
R = 250.00'
T = 29.58'
L = 58.89'
E = 1.74'
PC STA 201+32.41
PT STA 201+91.30

PROP. CURVE WHITE_OAK2
PI STA 203+19.05
Δ = 8° 48' 28" (RT)
D = 15° 26' 37"
R = 371.00'
T = 28.57'
L = 57.03'
E = 1.10'
PC STA 202+90.48
PT STA 203+47.51

℄ S 81°49'19" E

179°01'27"
PI STA 82+52.99

EXISTING R.O.W. LINE

PROPOSED TEMP. EASE. LINE

EXISTING R.O.W. LINE

EXISTING R.O.W. LINE

EXISTING R.O.W. LINE

EXISTING R.O.W. LINE

82

83

83+48.94 (IL 9) =
200+00.00 (WHITE OAK DR)

℄ N 07°47'51" W

℄ WHITE OAK DRIVE

200+00

105°

201

PC Sta 201+32.41

PT Sta 201+91.30

202

℄ N 21°17'39" W

PC Sta 202+90.48

203

PT Sta 203+47.51

204

℄ N 12°29'11" W

205+00

202+40.39, 29.97' RT
SW COR., LOT 16

202+44.00
30.49' RT

W LINE, LOT 16

EXISTING R.O.W. LINE

015

PROPOSED TEMPORARY
EASEMENT LINE

202+36.74
38.00' RT

S LINE, LOT 16

LOT 16

5012015 TE
JHOVANNI OJEDA ABARCA

TEMPORARY EASEMENT AREA = 16 SQ FT±
TE PURPOSE = GRADING

LOT 15

LOT 14

LOT 17

LOT 13

LOT 18

BLOCK 1

A.H. MOORE'S ADDITION

LOT 12

LOT 13

LOT 12

BLOCK 2

A.H. MOORE'S ADDITION

LOT 11

MULBERRY ST

EXISTING R.O.W. LINE

EXISTING R.O.W. LINE

EXISTING R.O.W. LINE

EXISTING R.O.W. LINE

EXISTING R.O.W. LINE

EXISTING R.O.W. LINE

EXISTING R.O.W. LINE

EXISTING R.O.W. LINE

EXISTING R.O.W. LINE

EXISTING R.O.W. LINE

PROPOSED R.O.W. LINE

PROPOSED TEMP. EASE. LINE

PROPOSED R.O.W. LINE

PROPOSED R.O.W. LINE

PROPOSED TEMP. EASE. LINE

PROPOSED R.O.W. LINE

℄ S 82°47'51" E

℄ FAP 693 (IL 9)
MARKET ST

84

85+00

* FAU 6385; FAU 6373; FAP 693; US 150; ILL 9

MODEL: Default
FILE NAME: V:\4216 - IL 9 Bloomington\CADD\CADD Sheets\0570855-sht-rowPlan5.dgn

Hutchison Engineering, Inc.

USER NAME = BDeCraene	DESIGNED -	REVISED -
	DRAWN -	REVISED -
PLOT SCALE = 40.00 ' / In.	CHECKED -	REVISED -
PLOT DATE = 10/17/2023	DATE -	REVISED -

STATE OF ILLINOIS
DEPARTMENT OF TRANSPORTATION

RIGHT OF WAY PLANS

	PROJECT	JOB NO. R-95-001-20
SCALE: 1" = 20'	SHEET 5 OF 5 SHEETS	STA. 200+00.00 TO STA. 205+00.00

F.A. RTE.	SECTION	COUNTY	TOTAL SHEETS	SHEET NO.
*	(129)RS-4	McLEAN	218	181
		CONTRACT NO. 70855		
FED. ROAD DIST. NO.	ILLINOIS	FED. AID PROJECT		

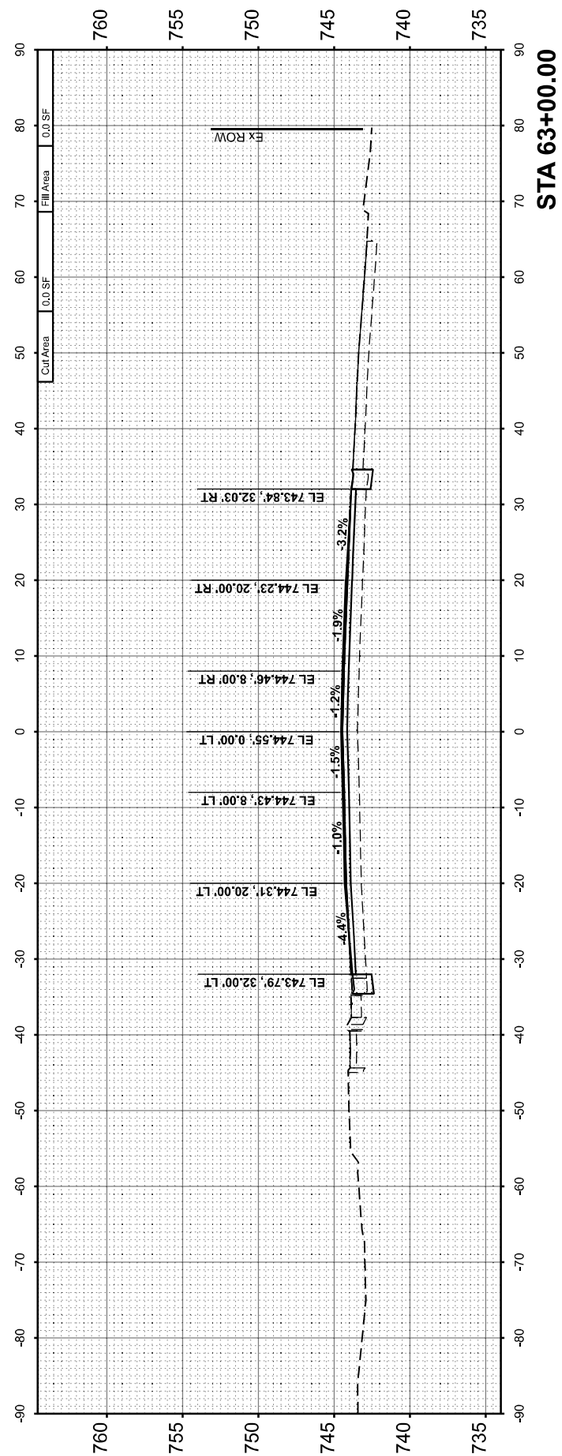

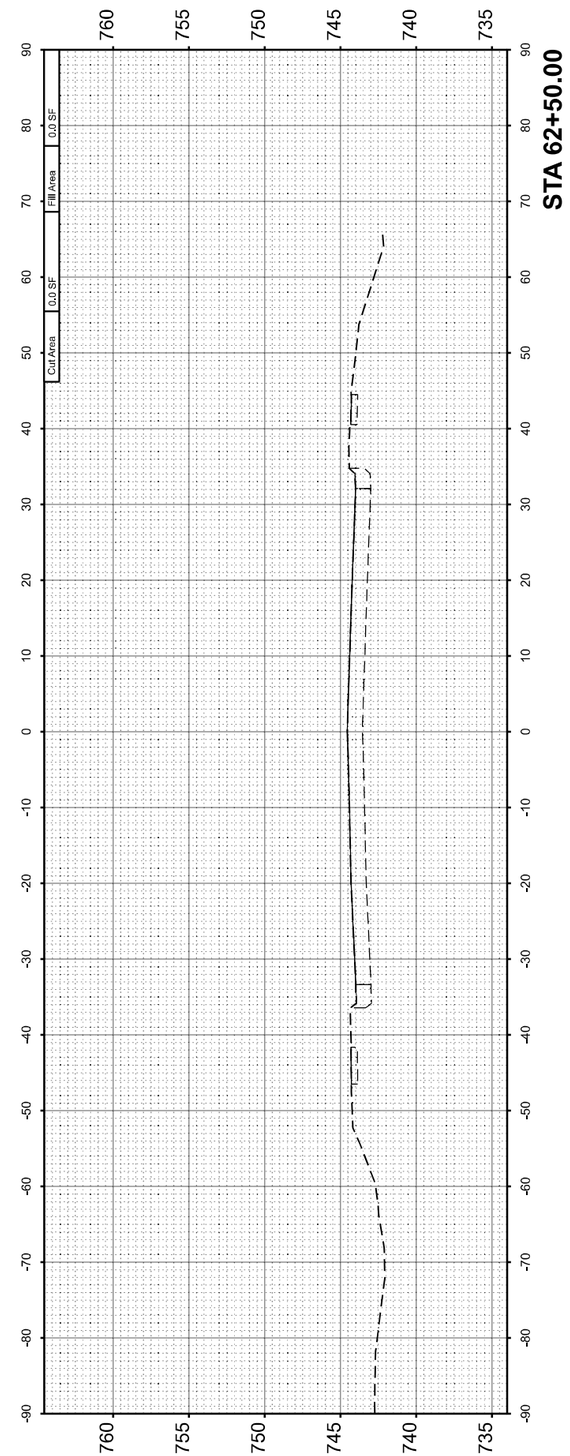

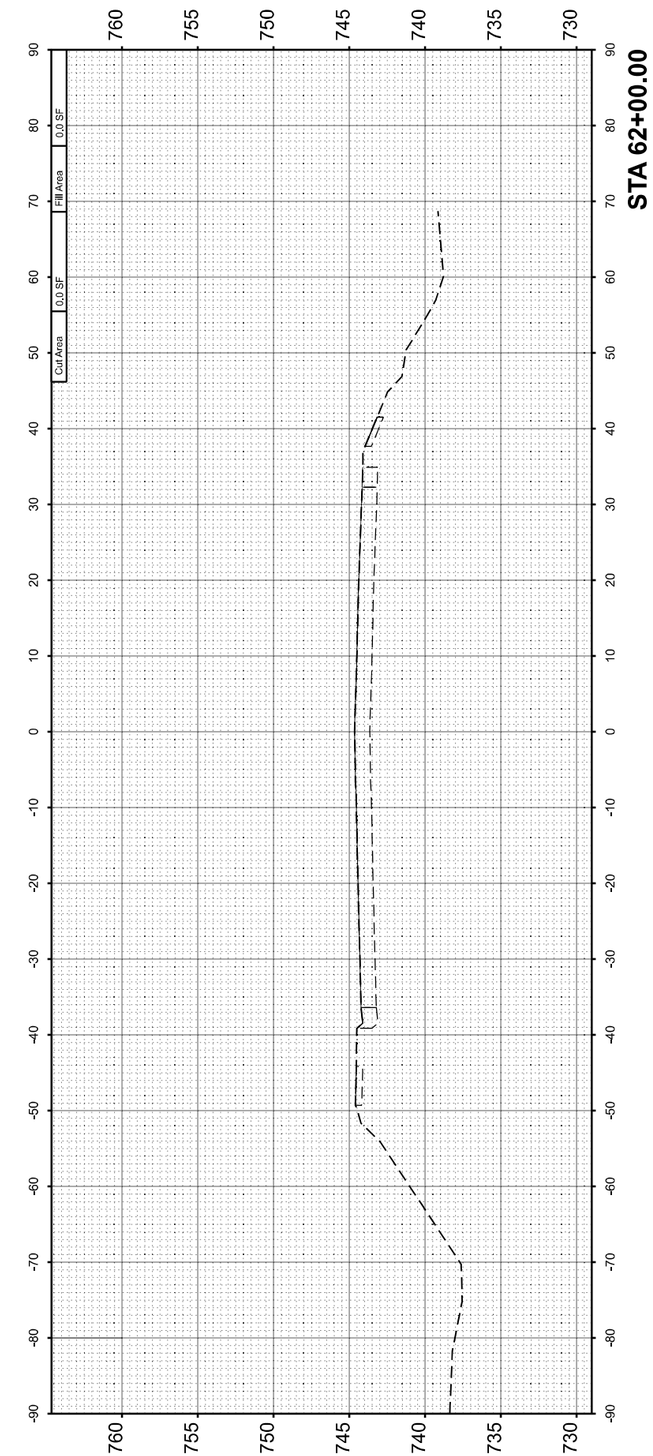

FINAL SURVEY		BY	DATE
NOTE BOOK	SURVEYED		
	PLOTTED		
	TEMPLATE		
	AREAS		
NO.	AREAS CHECKED		

ORIGINAL SURVEY		BY	DATE
NOTE BOOK	SURVEYED		
	PLOTTED		
	TEMPLATE		
	AREAS		
NO.	AREAS CHECKED		

MODEL: IL_9_1 - 62+00.00 R2 [Sheet]
FILE NAME: V:\4216 - IL 9 Bloomington\CADD\CADD Sheets\D570855-sht-xsc.dgn

Hutchison Engineering, Inc.

USER NAME = BDeCraene	DESIGNED -	REVISED -	
	DRAWN -	REVISED -	
PLOT SCALE = 0.16666633 ' / in.	CHECKED -	REVISED -	
PLOT DATE = 10/17/2023	DATE -	REVISED -	

STATE OF ILLINOIS
DEPARTMENT OF TRANSPORTATION

FAP 693 (IL RTE 9)
W MARKET ST CROSS SECTIONS

SCALE: H=10 V=5 | SHEET 1 OF 28 SHEETS | STA. 62+00.00 TO STA. 63+00.00

F.A.P. RTE.	SECTION	COUNTY	TOTAL SHEETS	SHEET NO.
693	(129,109)RS3(16,4.1)CS(10FR)RS	McLEAN	218	182
		CONTRACT NO. 70855		
		ILLINOIS	FED. AID PROJECT	

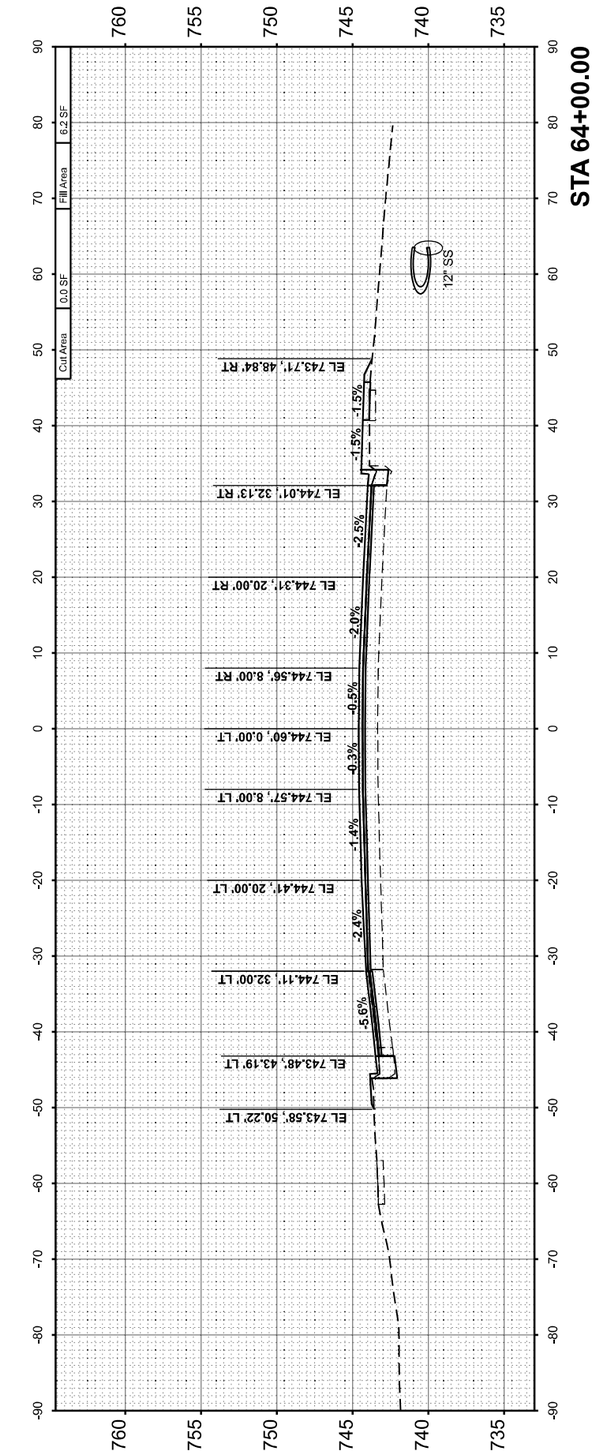

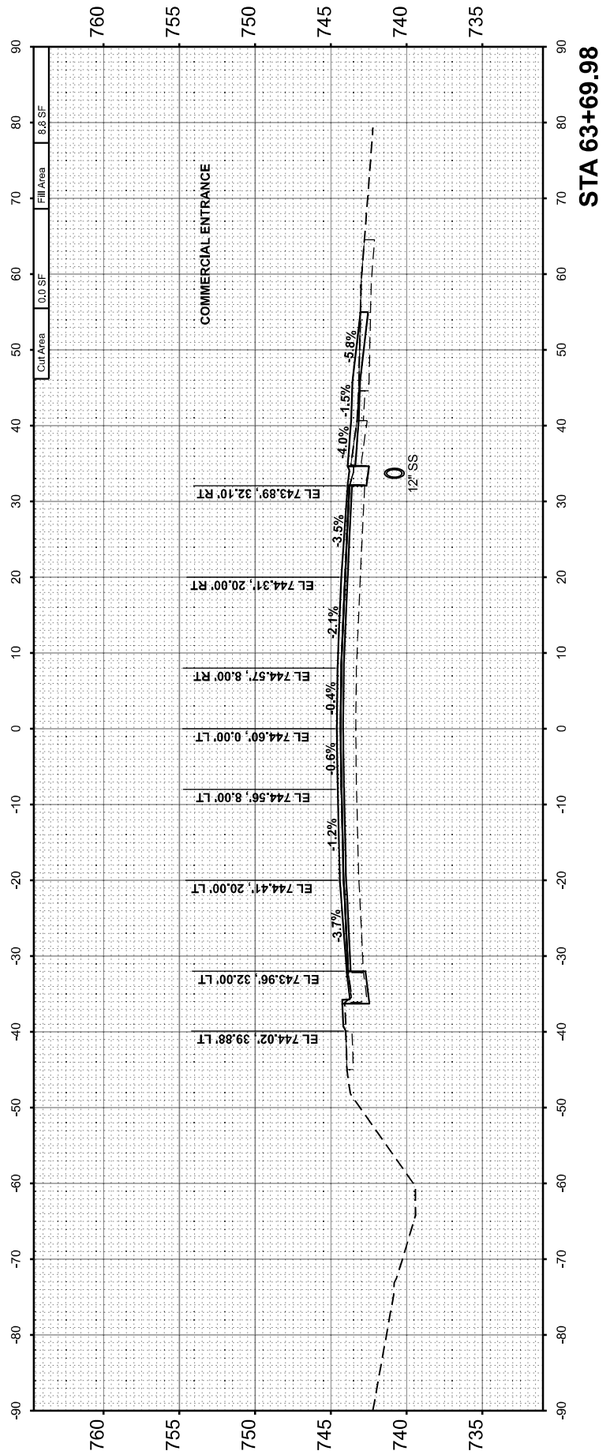

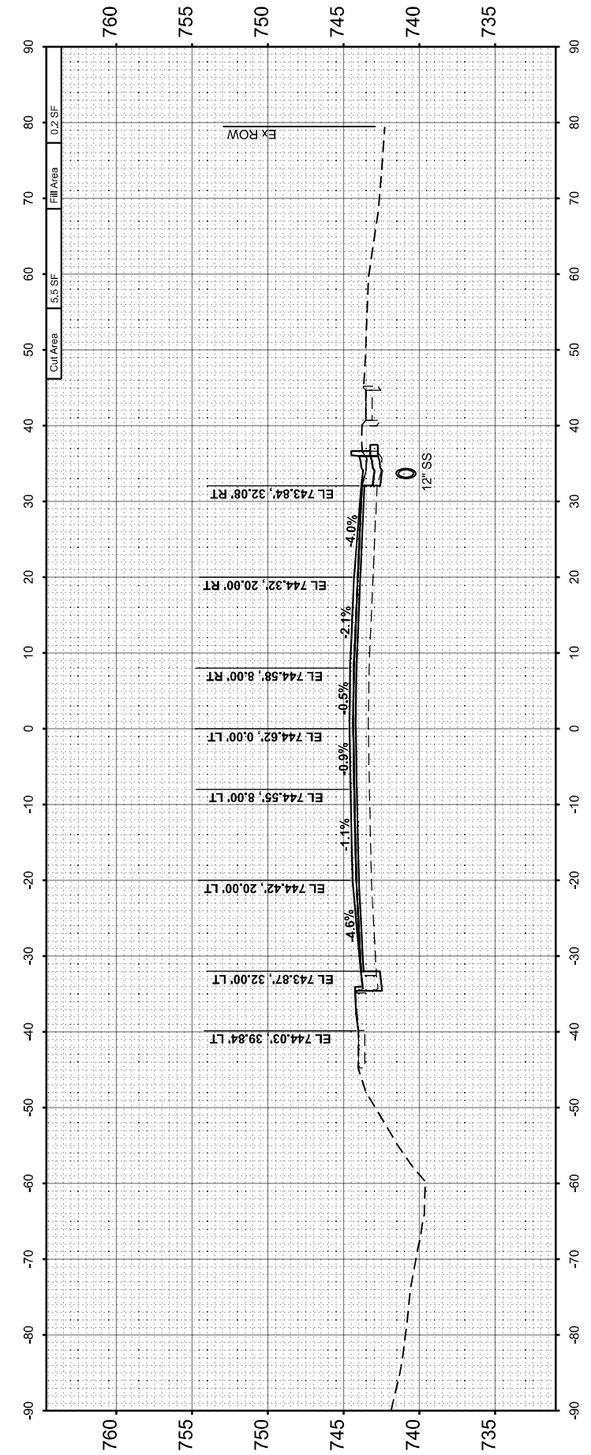

FINAL SURVEY		BY	DATE
NOTE BOOK NO.	SURVEYED		
	PLOTTED		
	TEMPLATE		
	AREAS		
	AREAS CHECKED		

ORIGINAL SURVEY		BY	DATE
NOTE BOOK NO.	SURVEYED		
	PLOTTED		
	TEMPLATE		
	AREAS		
	AREAS CHECKED		

MODEL: IL_9_1 - 63+50.00 R2 [Sheet]
FILE NAME: V:\4216 - IL 9 Bloomington\CADD\CADD Sheets\D570855-sht-xsc.dgn

Hutchison Engineering, Inc.

USER NAME = BDeCraene	DESIGNED -	REVISED -	
	DRAWN -	REVISED -	
PLOT SCALE = 0.16666633 ' / in.	CHECKED -	REVISED -	
PLOT DATE = 10/17/2023	DATE -	REVISED -	

STATE OF ILLINOIS
DEPARTMENT OF TRANSPORTATION

FAP 693 (IL RTE 9)
W MARKET ST CROSS SECTIONS

SCALE: H=10 V=5 | SHEET 2 OF 28 SHEETS | STA. 63+50.00 TO STA. 64+00.00

F.A.P. RTE.	SECTION	COUNTY	TOTAL SHEETS	SHEET NO.
693	(129,109)RS3(16,4.1)CS(10FR)RS	McLEAN	218	183

CONTRACT NO. 70855

ILLINOIS | FED. AID PROJECT

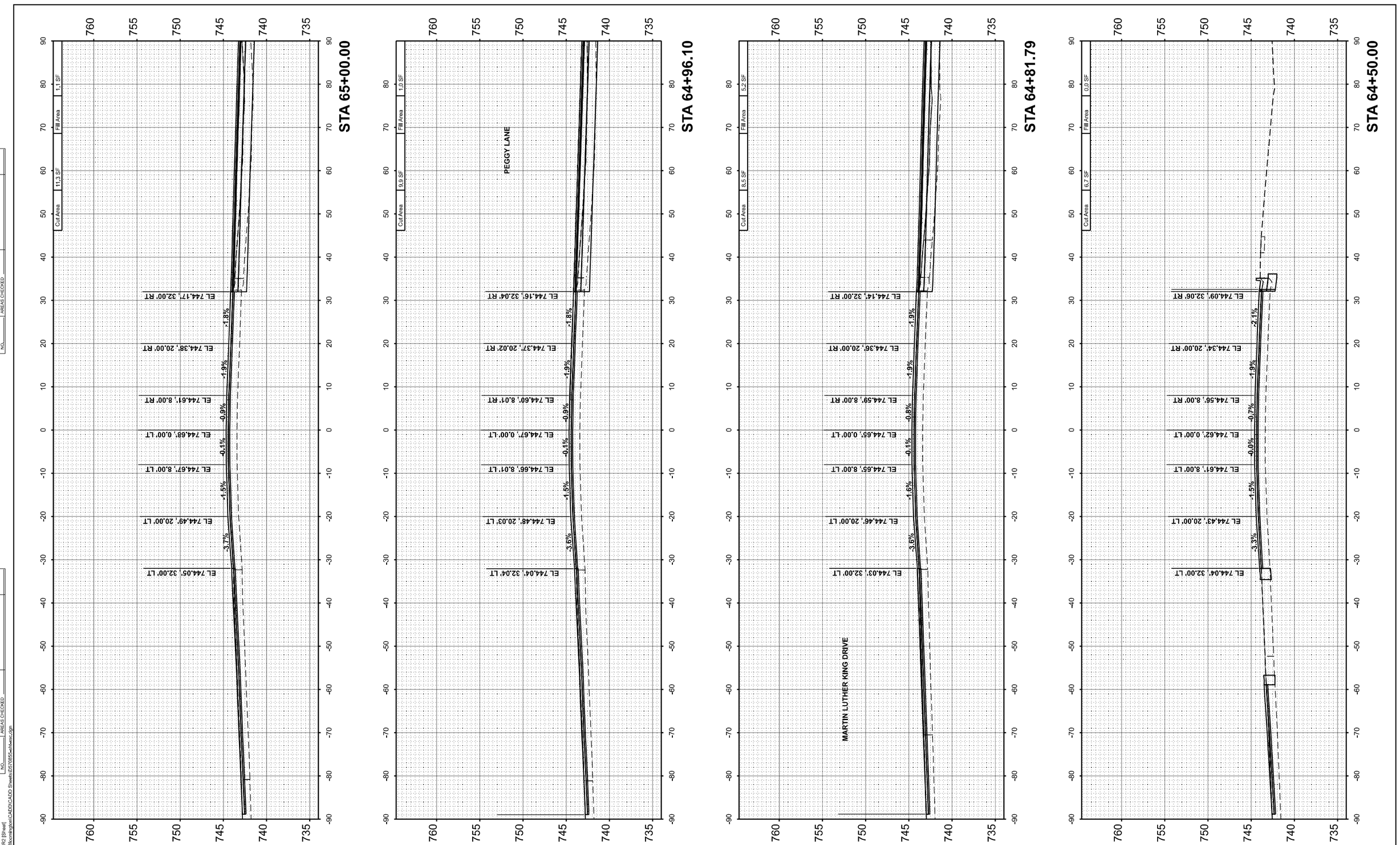

FINAL SURVEY		BY	DATE
NOTE BOOK	SURVEYED		
	PLOTTED		
	TEMPLATE		
	AREAS		
NO.	AREAS CHECKED		

ORIGINAL SURVEY		BY	DATE
NOTE BOOK	SURVEYED		
	PLOTTED		
	TEMPLATE		
	AREAS		
NO.	AREAS CHECKED		

MODEL: IL_9_1 - 64+50.00 R2 [Sheet]
FILE NAME: V:\4216 - IL 9 Bloomington\CADD\CADD Sheets\D570855-sht-xsc.dgn

Hutchison Engineering, Inc.

USER NAME = BDeCraene	DESIGNED -	REVISED -	
	DRAWN -	REVISED -	
PLOT SCALE = 0.16666633 ' / in.	CHECKED -	REVISED -	
PLOT DATE = 10/17/2023	DATE -	REVISED -	

STATE OF ILLINOIS
DEPARTMENT OF TRANSPORTATION

FAP 693 (IL RTE 9)
W MARKET ST CROSS SECTIONS

SCALE: H=10 V=5 | SHEET 3 OF 28 SHEETS | STA. 64+50.00 TO STA. 65+00.00

F.A.P. RTE.	SECTION	COUNTY	TOTAL SHEETS	SHEET NO.
693	(129,109)RS3(16,4.1)CS(10FR)RS	McLEAN	218	184

CONTRACT NO. 70855

ILLINOIS FED. AID PROJECT

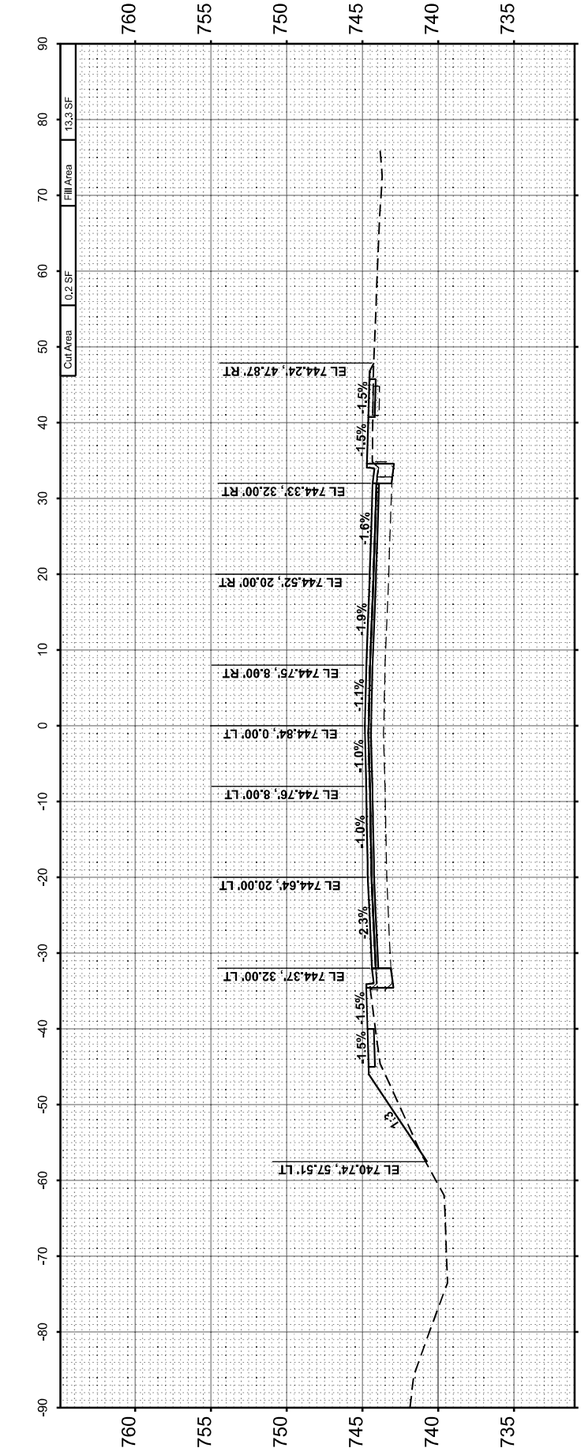

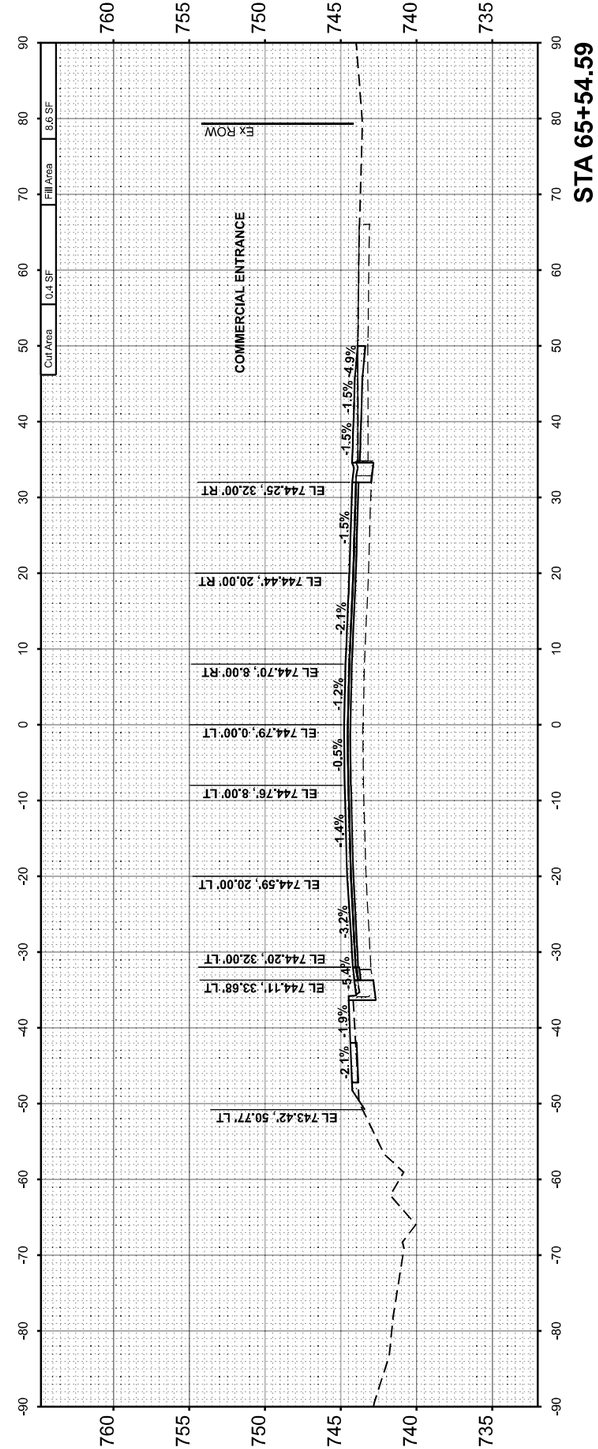

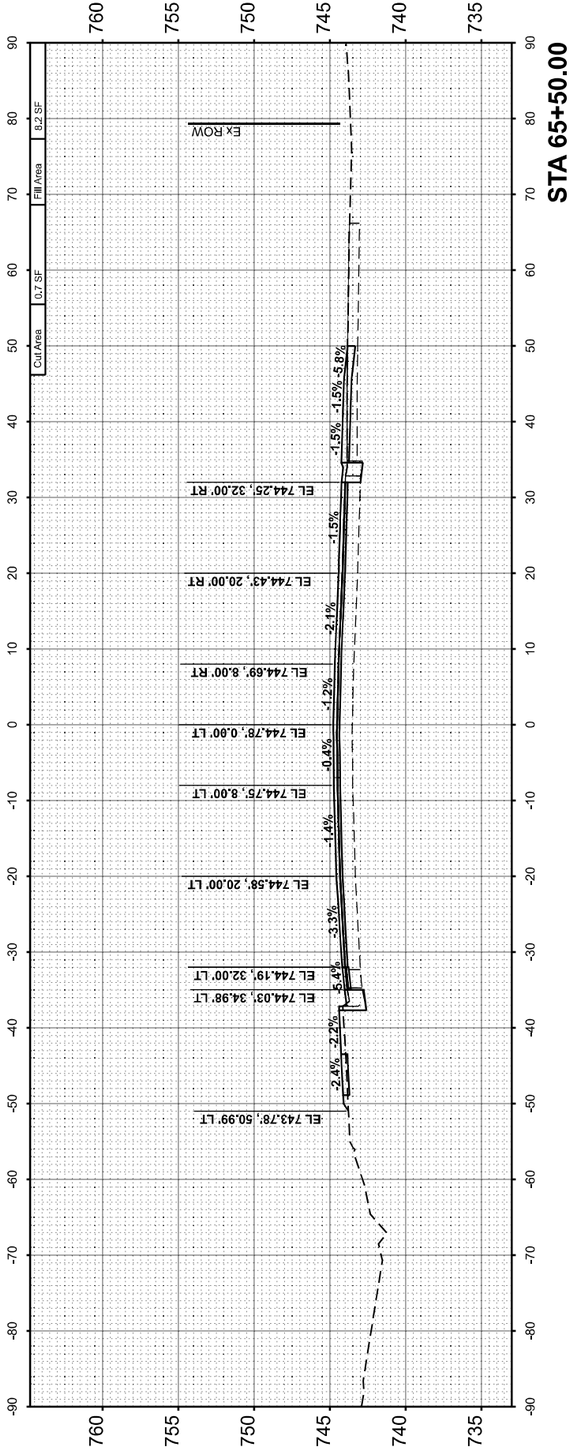

FINAL SURVEY		BY	DATE
	SURVEYED		
	PLOTTED		
NOTE BOOK	TEMPLATE		
	AREAS		
NO.	AREAS CHECKED		

ORIGINAL SURVEY		BY	DATE
	SURVEYED		
	PLOTTED		
NOTE BOOK	TEMPLATE		
	AREAS		
NO.	AREAS CHECKED		

MODEL: IL_9_1 - 65+50.00 R2 [Sheet]
FILE NAME: V:\4216 - IL 9 Bloomington\CADD\CADD Sheets\D570855-sht-xsc.dgn

Hutchison Engineering, Inc.

USER NAME = BDeCraene	DESIGNED -	REVISED -
	DRAWN -	REVISED -
PLOT SCALE = 0.16666633 ' / In.	CHECKED -	REVISED -
PLOT DATE = 10/17/2023	DATE -	REVISED -

STATE OF ILLINOIS
DEPARTMENT OF TRANSPORTATION

FAP 693 (IL RTE 9)
W MARKET ST CROSS SECTIONS

SCALE: H=10 V=5 | SHEET 4 OF 28 SHEETS | STA. 65+50.00 | TO STA. 66+00.00

F.A.P. RTE.	SECTION	COUNTY	TOTAL SHEETS	SHEET NO.
693	(129,109)RS3(16,4.1)CS(10FR)RS	McLEAN	218	185
		CONTRACT NO. 70855		
	ILLINOIS	FED. AID PROJECT		

FINAL SURVEY		BY	DATE
	SURVEYED		
	PLOTTED		
NOTE BOOK	TEMPLATE		
	AREAS		
NO.	AREAS CHECKED		

ORIGINAL SURVEY		BY	DATE
	SURVEYED		
	PLOTTED		
NOTE BOOK	TEMPLATE		
	AREAS		
NO.	AREAS CHECKED		

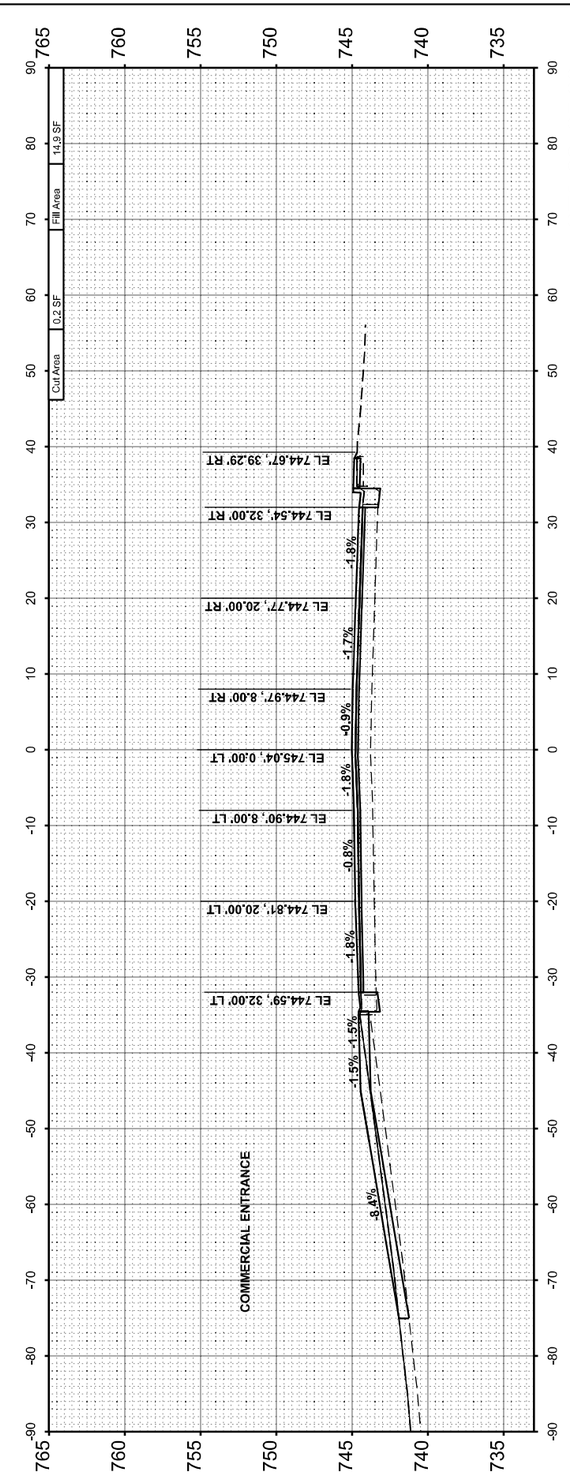

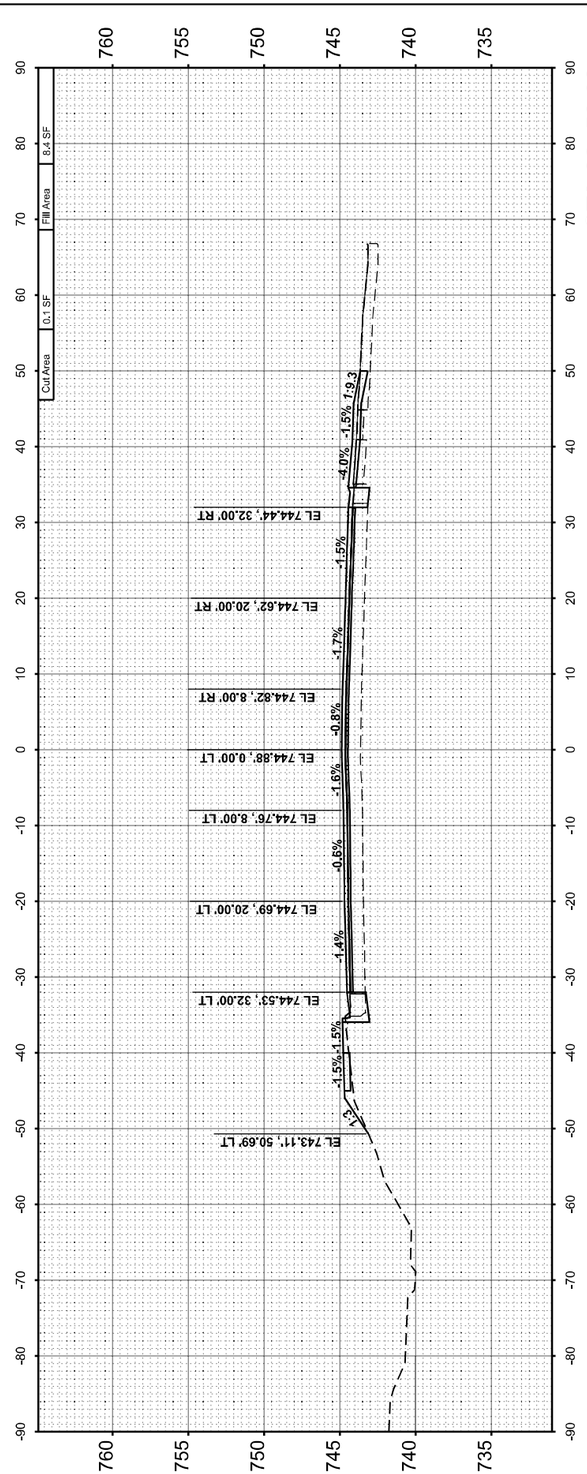

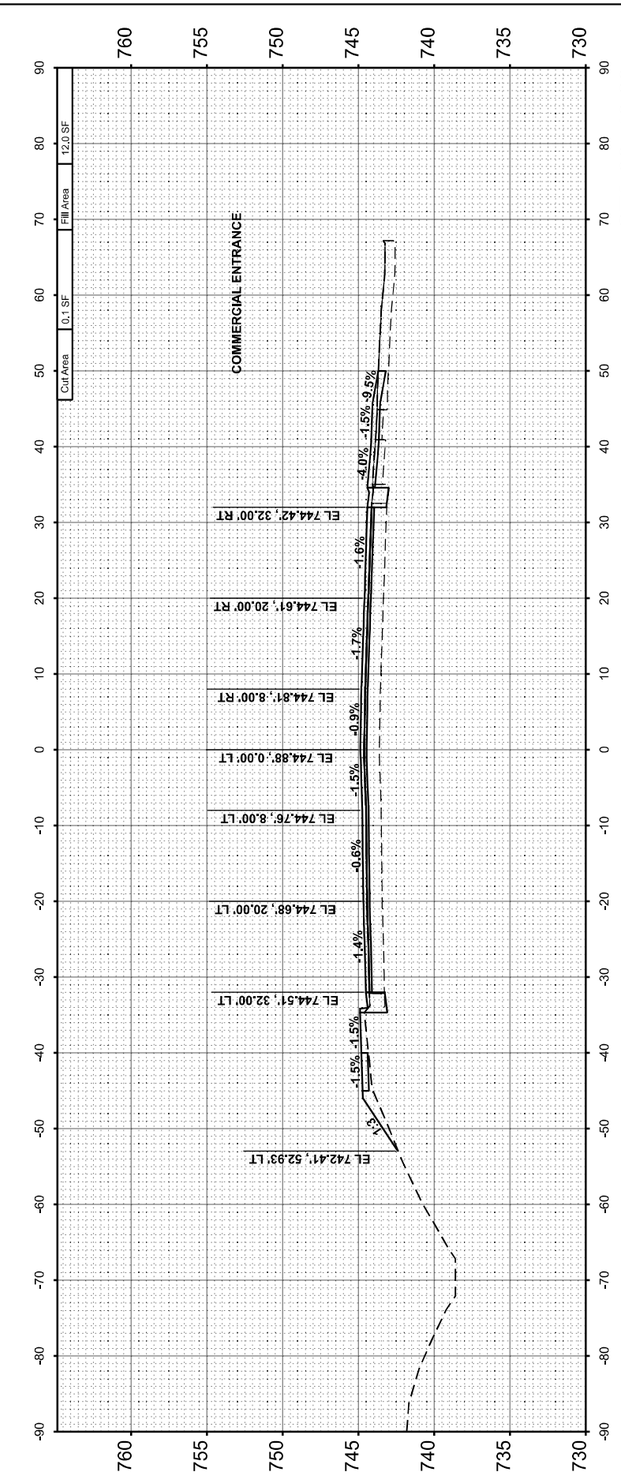

MODEL: IL_9_1 - 66+43.29 R2 [Sheet]
FILE NAME: V:\n4216 - IL 9 Bloomington\CADD\CADD Sheets\D2170855-sht-xsc.dgn

Hutchison Engineering, Inc.

USER NAME = BDeCraene	DESIGNED -	REVISED -	
	DRAWN -	REVISED -	
PLOT SCALE = 0.16666633 ' / In.	CHECKED -	REVISED -	
PLOT DATE = 10/17/2023	DATE -	REVISED -	

STATE OF ILLINOIS
DEPARTMENT OF TRANSPORTATION

FAP 693 (IL RTE 9)
W MARKET ST CROSS SECTIONS

SCALE: H=10 V=5 | SHEET 5 OF 28 SHEETS | STA. 66+43.29 | TO STA. 66+85.80

F.A.P. RTE.	SECTION	COUNTY	TOTAL SHEETS	SHEET NO.
693	(129,109)RS3(16,4.1)CS(10FR)RS	McLEAN	218	186
		CONTRACT NO. 70855		
	ILLINOIS	FED. AID PROJECT		

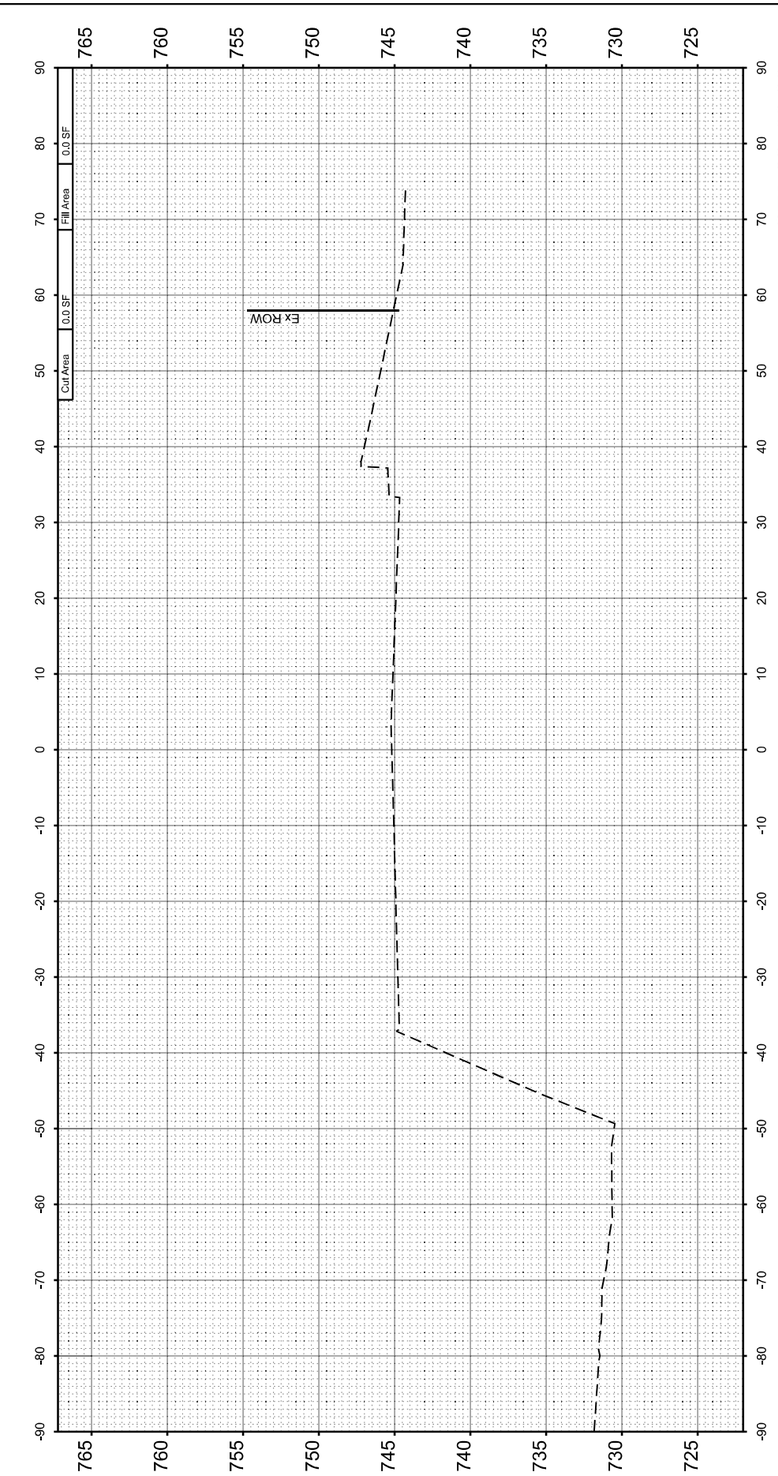

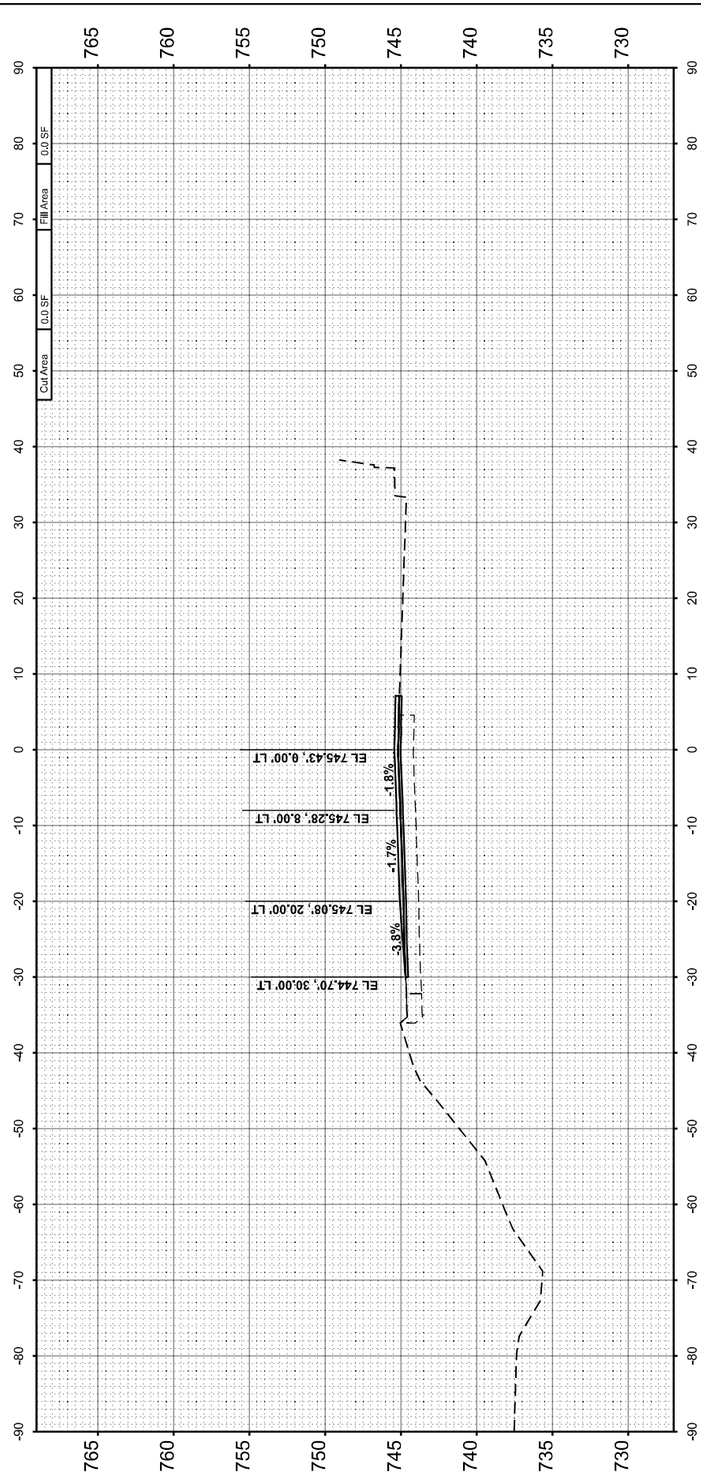

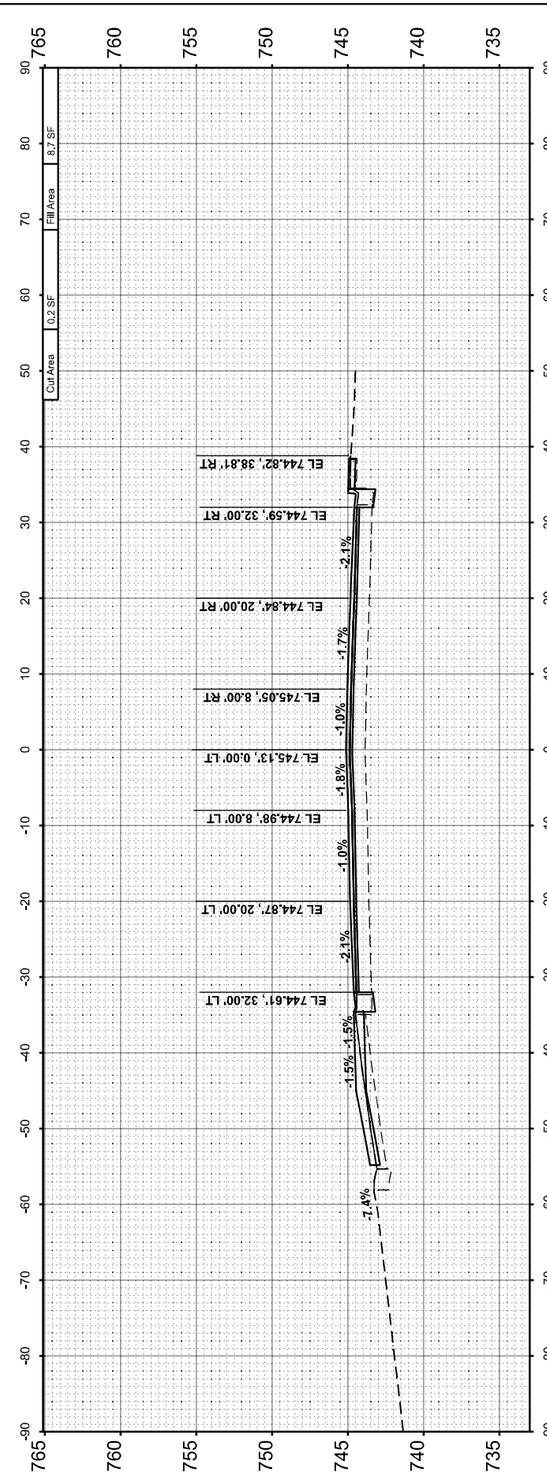

FINAL SURVEY		BY	DATE
	SURVEYED		
	PLOTTED		
NOTE BOOK	TEMPLATE		
	AREAS		
NO.	AREAS CHECKED		

ORIGINAL SURVEY		BY	DATE
	SURVEYED		
	PLOTTED		
NOTE BOOK	TEMPLATE		
	AREAS		
NO.	AREAS CHECKED		

MODEL: IL_9_1_67+00.00 R2 [Sheet]
FILE NAME: V:\421\fl - IL 9 Bl\cmitgb\CADD\CADD Sheets\D5707855-alt-xsc.dgn

Hutchison Engineering, Inc.

USER NAME = BDeCraene	DESIGNED -	REVISED -
	DRAWN -	REVISED -
PLOT SCALE = 0.16666633 ' / In.	CHECKED -	REVISED -
PLOT DATE = 10/17/2023	DATE -	REVISED -

STATE OF ILLINOIS
DEPARTMENT OF TRANSPORTATION

FAP 693 (IL RTE 9)
W MARKET ST CROSS SECTIONS

SCALE: H=10 V=5 | SHEET 6 OF 28 SHEETS | STA. 67+00.00 | TO STA. 68+00.00

F.A.P. RTE.	SECTION	COUNTY	TOTAL SHEETS	SHEET NO.
693	(129,109)RS3(16,4.1)CS(10FR)RS	McLEAN	218	187
		CONTRACT NO. 70855		
	ILLINOIS	FED. AID PROJECT		

FINAL SURVEY		BY	DATE
NOTE BOOK NO.	SURVEYED		
	PLOTTED		
	TEMPLATE		
	AREAS		
	AREAS CHECKED		

ORIGINAL SURVEY		BY	DATE
NOTE BOOK NO.	SURVEYED		
	PLOTTED		
	TEMPLATE		
	AREAS		
	AREAS CHECKED		

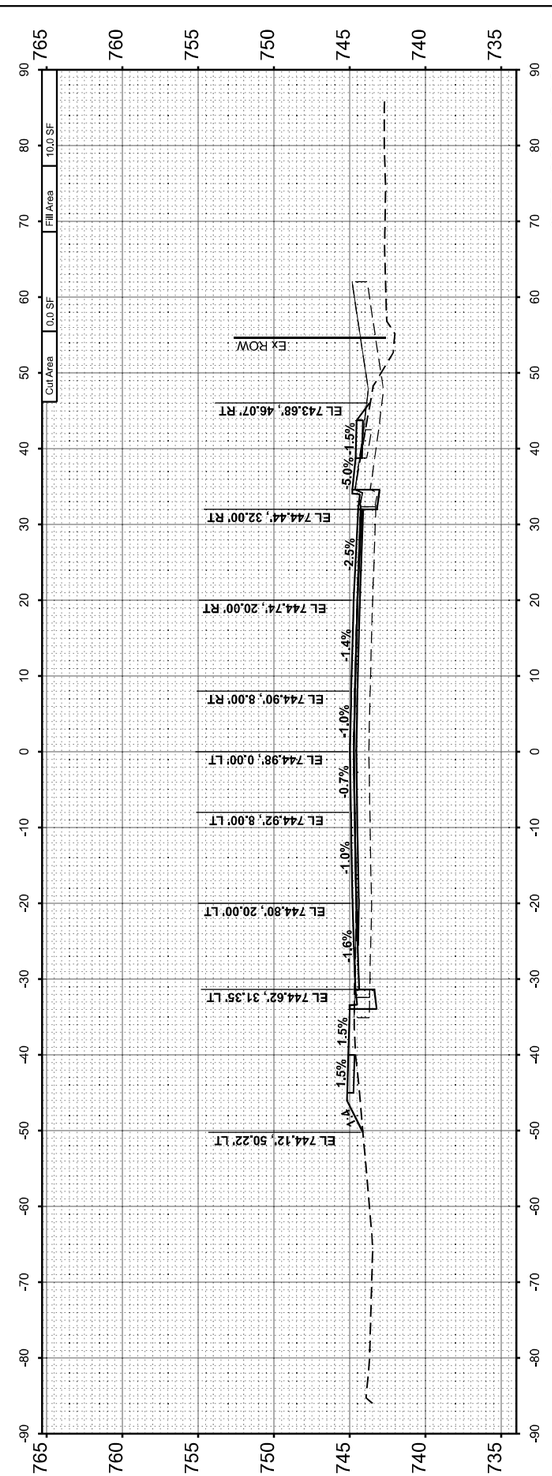

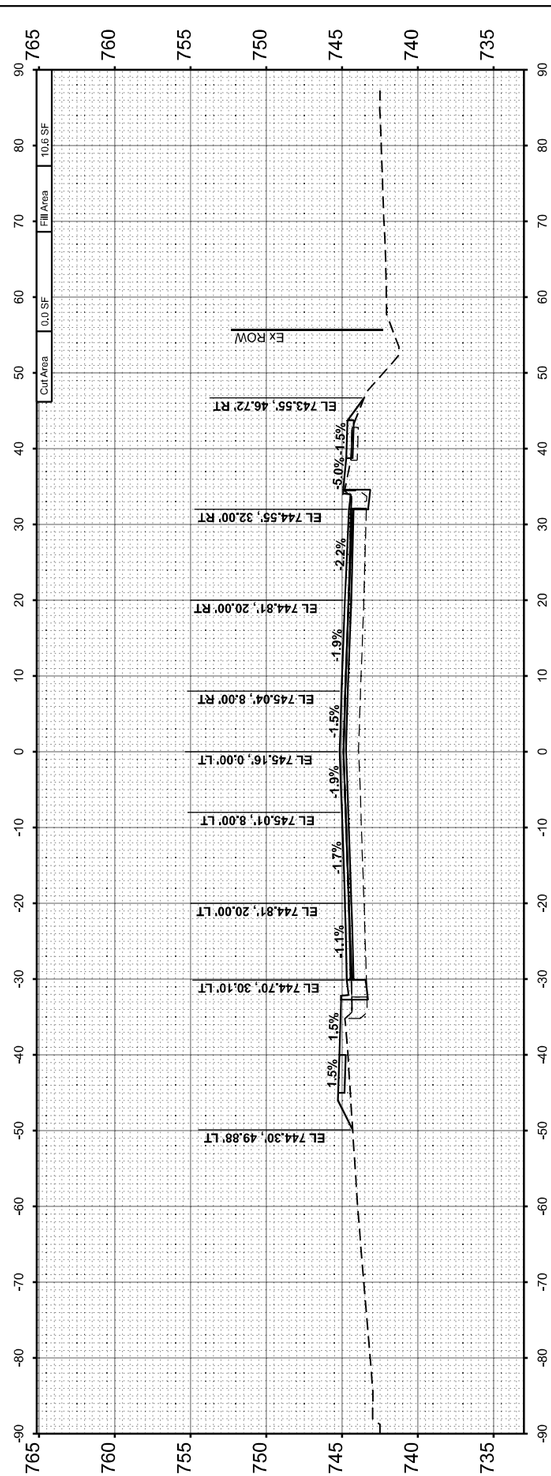

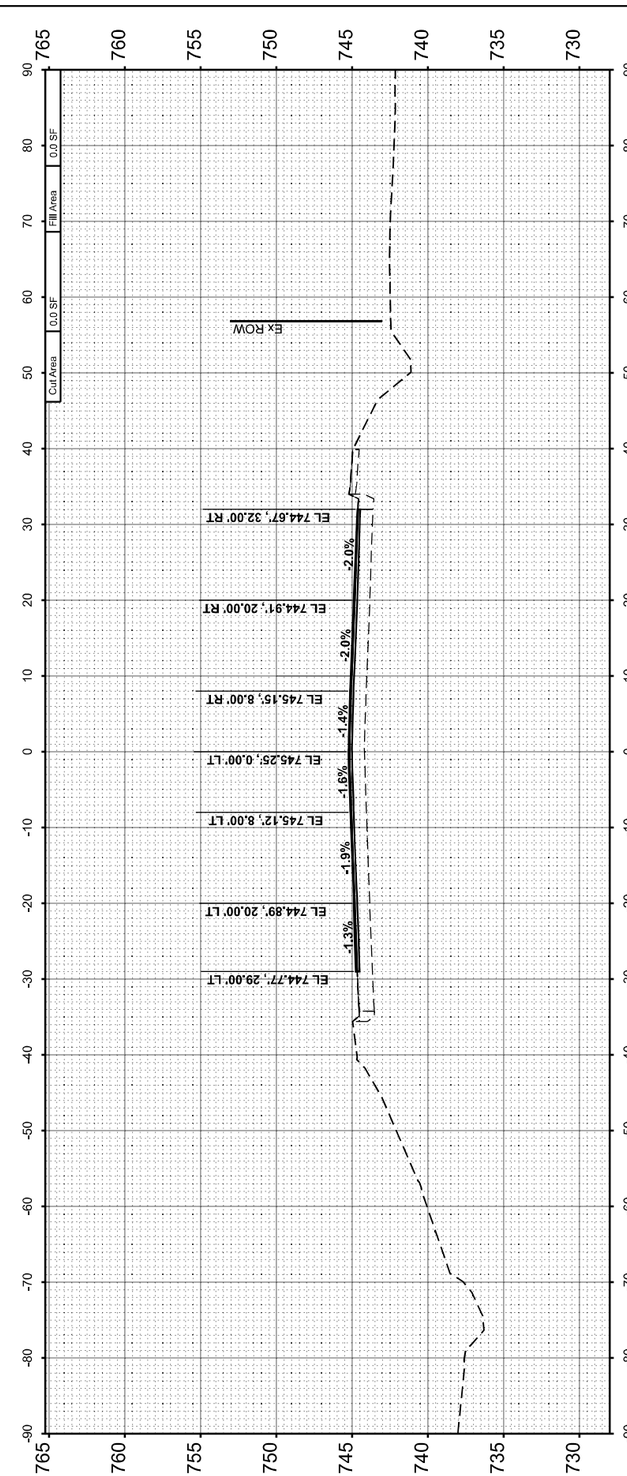

MODEL: IL_9_1 - 68+50.00 R2 [Sheet]
FILE NAME: V:\4216 - IL 9 Bloomington\CADD\CADD Sheets\D570855-sht-xsc.dgn

Hutchison Engineering, Inc.	USER NAME = BDeCraene	DESIGNED -	REVISED -	STATE OF ILLINOIS DEPARTMENT OF TRANSPORTATION	FAP 693 (IL RTE 9) W MARKET ST CROSS SECTIONS	F.A.P. RTE.	SECTION	COUNTY	TOTAL SHEETS	SHEET NO.
		DRAWN -	REVISED -			693	(129,109)RS3(16,4.1)CS(10FR)RS	McLEAN	218	188
	PLOT SCALE = 0.16666633 ' / in.	CHECKED -	REVISED -			CONTRACT NO. 70855				
	PLOT DATE = 10/17/2023	DATE -	REVISED -		SCALE: H=10 V=5 SHEET 7 OF 28 SHEETS STA. 68+50.00 TO STA. 69+50.00	ILLINOIS FED. AID PROJECT				

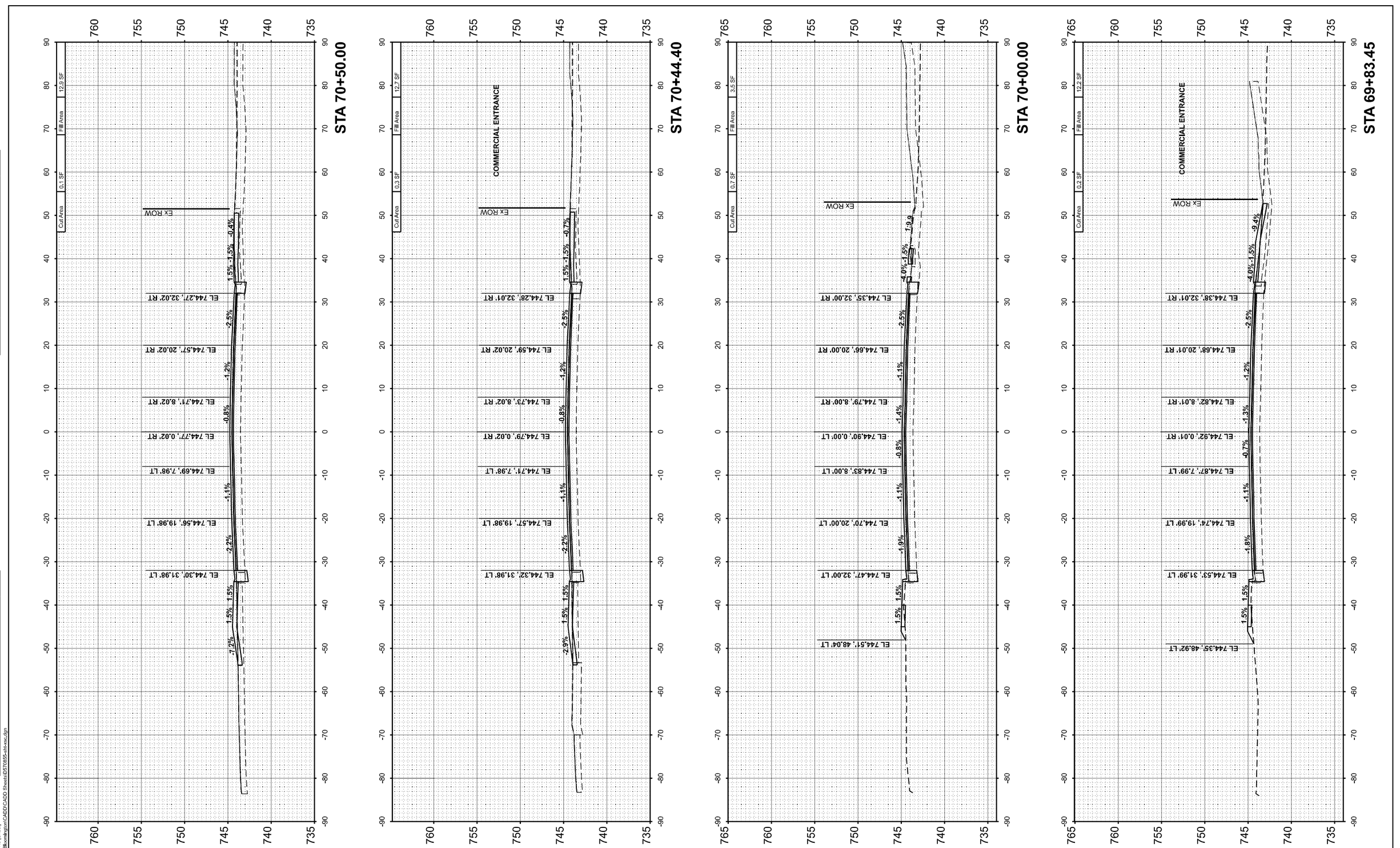

FINAL SURVEY		BY	DATE
	SURVEYED		
	PLOTTED		
NOTE BOOK	TEMPLATE		
	AREAS		
NO.	AREAS CHECKED		

ORIGINAL SURVEY		BY	DATE
	SURVEYED		
	PLOTTED		
NOTE BOOK	TEMPLATE		
	AREAS		
NO.	AREAS CHECKED		

MODEL: IL_1 - 69+83.45 R3 [Sheet]
FILE NAME: V:\d2\16 - IL 9 Bloomington\CADD\CADD Sheets\D570855-alle-ess.dgn

Hutchison Engineering, Inc.

USER NAME = BDeCraene	DESIGNED -	REVISED -
	DRAWN -	REVISED -
PLOT SCALE = 0.16666633 ' / In.	CHECKED -	REVISED -
PLOT DATE = 10/17/2023	DATE -	REVISED -

STATE OF ILLINOIS
DEPARTMENT OF TRANSPORTATION

FAP 693 (IL RTE 9)
W MARKET ST CROSS SECTIONS

SCALE: H=10 V=5 | SHEET 8 OF 28 SHEETS | STA. 69+83,45 | TO STA. 70+50.00

F.A.P. RTE.	SECTION	COUNTY	TOTAL SHEETS	SHEET NO.
693	(129,109)RS3(16,4.1)CS(10FR)RS	McLEAN	218	189
		CONTRACT NO. 70855		
	ILLINOIS FED. AID PROJECT			

FINAL SURVEY		BY	DATE
	SURVEYED		
	PLOTTED		
NOTE BOOK	TEMPLATE		
	AREAS		
NO.	AREAS CHECKED		

ORIGINAL SURVEY		BY	DATE
	SURVEYED		
	PLOTTED		
NOTE BOOK	TEMPLATE		
	AREAS		
NO.	AREAS CHECKED		

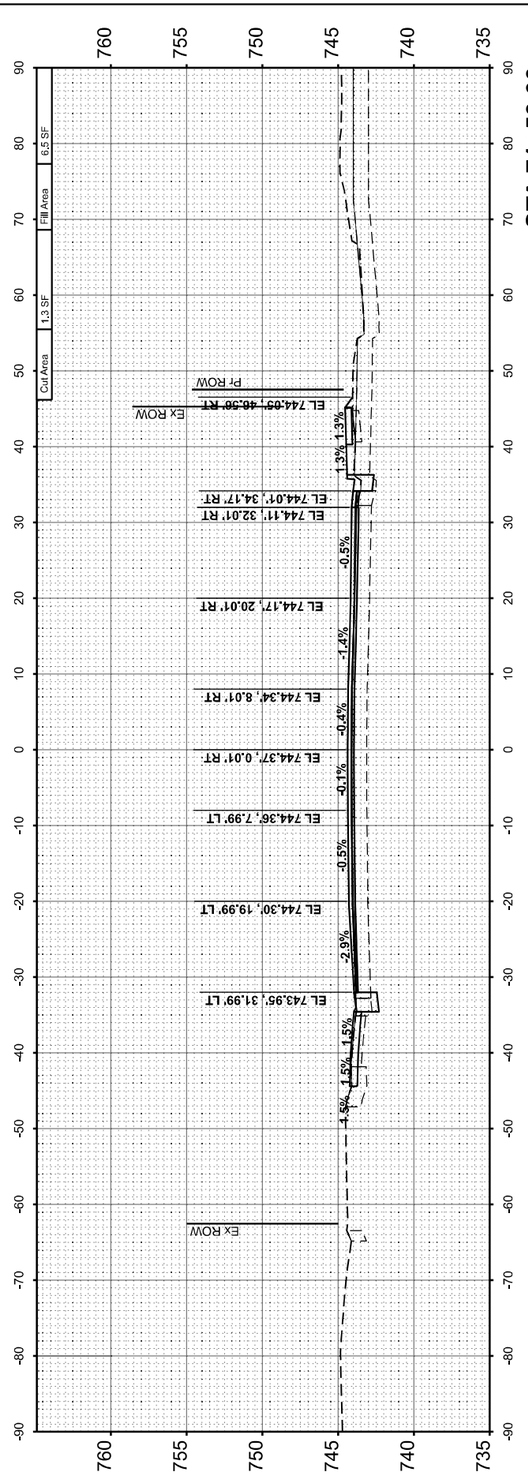

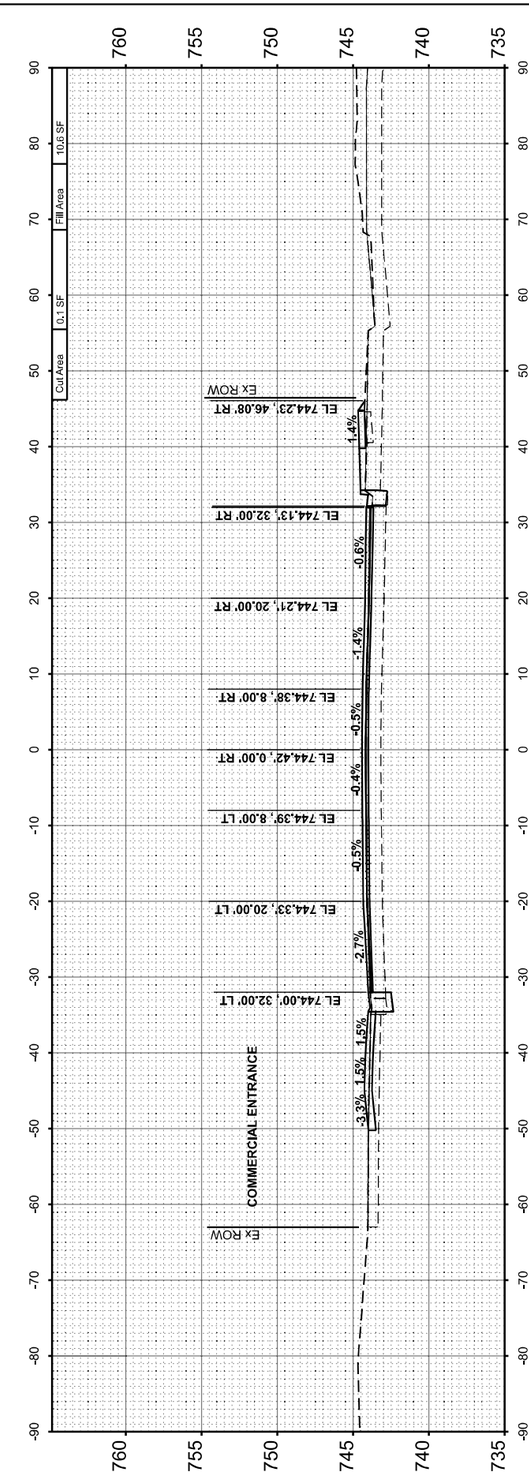

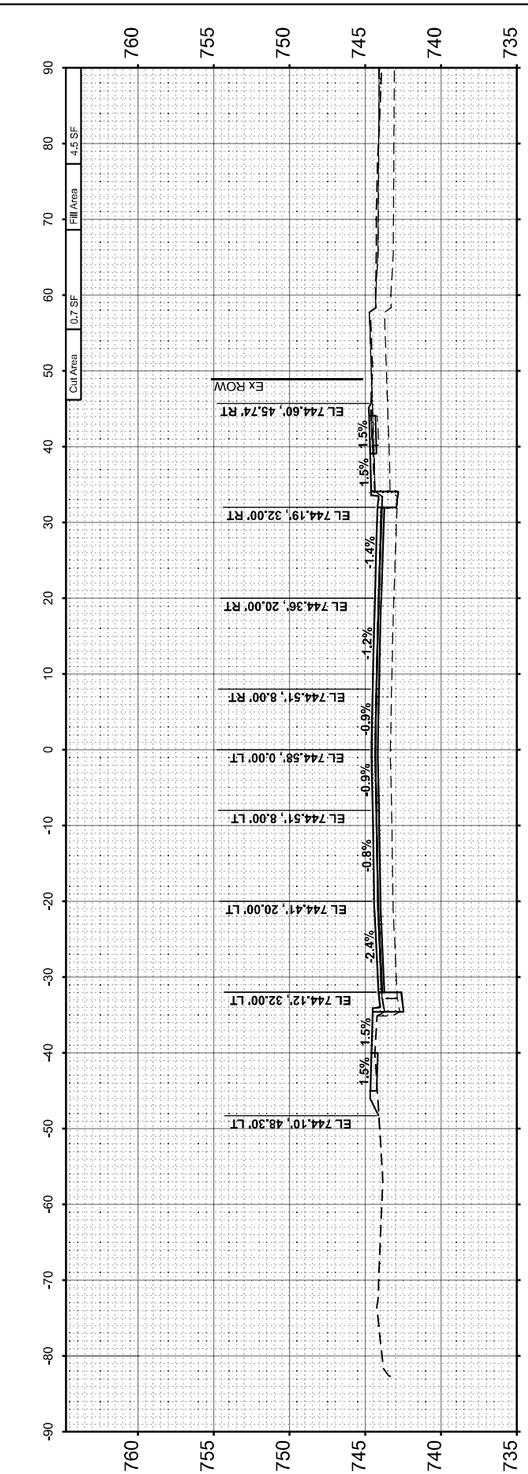

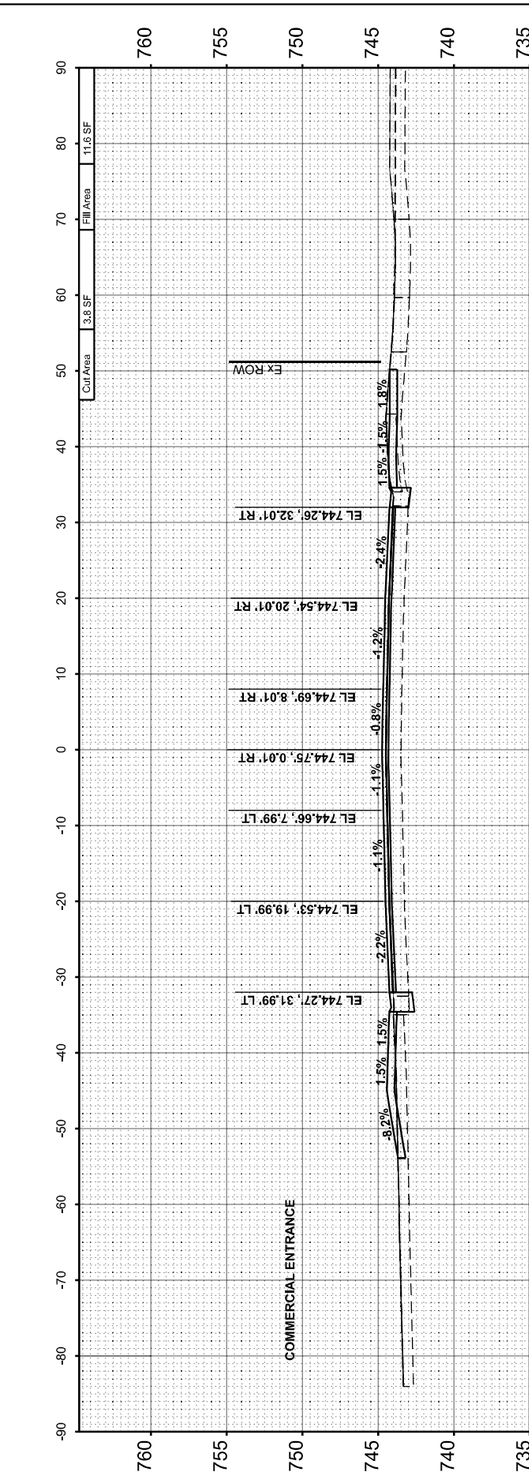

MODEL: IL_9_1 - 70+57.89 R3 [Sheet]
FILE NAME: Y:\4216 - IL 9 Bloomington\CADD\CADD Sheets\D570855-sht-ex-dgn

USER NAME = BDeCraene	DESIGNED -	REVISED -	
	DRAWN -	REVISED -	
PLOT SCALE = 0.16666633 ' / In.	CHECKED -	REVISED -	
PLOT DATE = 10/17/2023	DATE -	REVISED -	

Hutchison Engineering, Inc.

STATE OF ILLINOIS
DEPARTMENT OF TRANSPORTATION

FAP 693 (IL RTE 9)
W MARKET ST CROSS SECTIONS

SCALE: H=10 V=5 | SHEET 9 OF 28 SHEETS | STA. 70+57.89 TO STA. 71+50.00

F.A.P. RTE.	SECTION	COUNTY	TOTAL SHEETS	SHEET NO.
693	(129,109)RS3(16,4.1)CS(10FR)RS	McLEAN	218	190
		CONTRACT NO. 70855		
	ILLINOIS	FED. AID PROJECT		

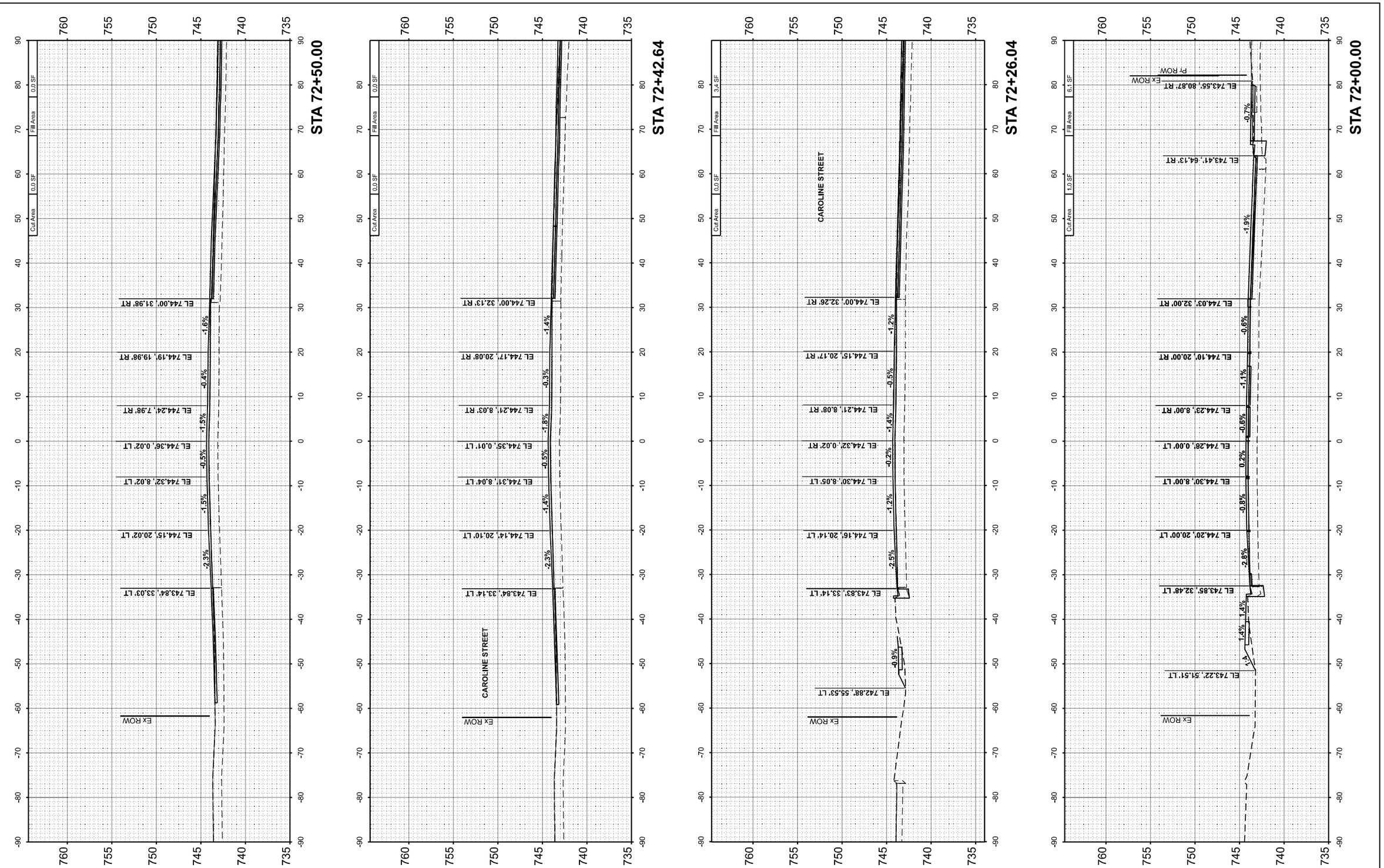

FINAL SURVEY		BY	DATE
NOTE BOOK NO.	SURVEYED		
	PLOTTED		
	TEMPLATE		
	AREAS		
	AREAS CHECKED		

ORIGINAL SURVEY		BY	DATE
NOTE BOOK NO.	SURVEYED		
	PLOTTED		
	TEMPLATE		
	AREAS		
	AREAS CHECKED		

MODEL: IL_9_1 - 72+00.00 R3 [Sheet]
FILE NAME: V:\4216 - IL 9 Bloomington\CADD\CADD Sheets\D570855-sht-asc.dgn

Hutchison Engineering, Inc.

USER NAME = BDeCraene	DESIGNED -	REVISED -	
	DRAWN -	REVISED -	
PLOT SCALE = 0.16666633 ' / in.	CHECKED -	REVISED -	
PLOT DATE = 10/17/2023	DATE -	REVISED -	

STATE OF ILLINOIS
DEPARTMENT OF TRANSPORTATION

FAP 693 (IL RTE 9)
W MARKET ST CROSS SECTIONS

SCALE: H=10 V=5 | SHEET 10 OF 28 SHEETS | STA. 72+00.00 TO STA. 72+50.00

F.A.P. RTE.	SECTION	COUNTY	TOTAL SHEETS	SHEET NO.
693	(129,109)RS3(16,4.1)CS(10FR)RS	McLEAN	218	191

CONTRACT NO. 70855

ILLINOIS | FED. AID PROJECT

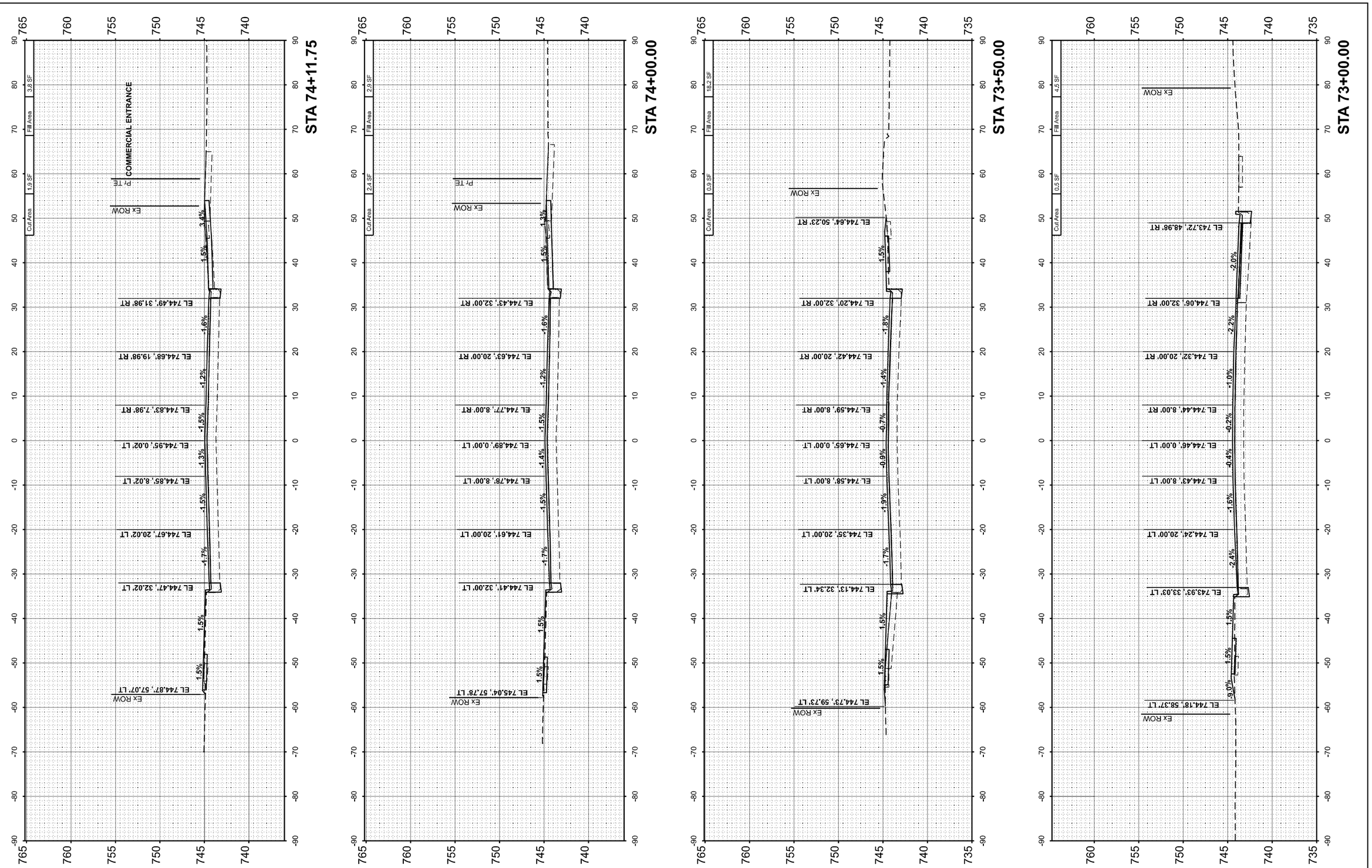

ORIGINAL SURVEY / FINAL SURVEY

NOTE BOOK	SURVEYED	BY	DATE
NO.	PLOTTED		
	TEMPLATE		
	AREAS		
	AREAS CHECKED		

MODEL: IL_9_1 +73+00.00 R4 [Sheet]
FILE NAME: Y:\d216 - IL 9 Bloomington\CADD\CADD Sheets\D5710855-sht-exc.dgn

Hutchison Engineering, Inc.

USER NAME = BDeCraene	DESIGNED -	REVISED -
	DRAWN -	REVISED -
PLOT SCALE = 0.16666633 ' / In.	CHECKED -	REVISED -
PLOT DATE = 10/17/2023	DATE -	REVISED -

STATE OF ILLINOIS
DEPARTMENT OF TRANSPORTATION

FAP 693 (IL RTE 9)
W MARKET ST CROSS SECTIONS

SCALE: H=10 V=5 | SHEET 11 OF 28 SHEETS | STA. 73+00.00 | TO STA. 74+11.75

F.A.P. RTE.	SECTION	COUNTY	TOTAL SHEETS	SHEET NO.
693	(129,109)RS3(16,4.1)CS(10FR)RS	McLEAN	218	192
		CONTRACT NO. 70855		
		ILLINOIS	FED. AID PROJECT	

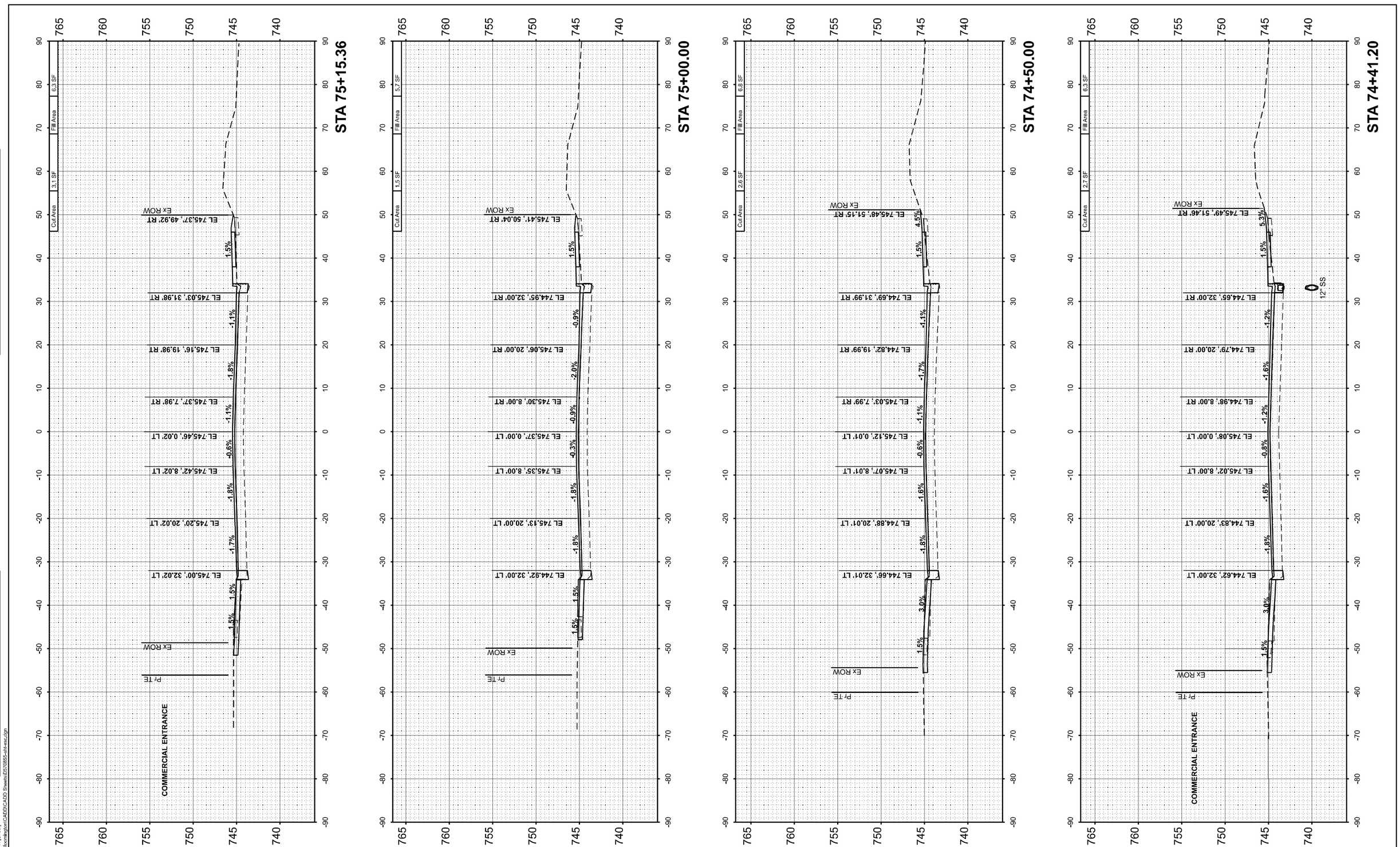

FINAL SURVEY	SURVEYED	BY	DATE
	PLOTTED		
NOTE BOOK	TEMPLATE		
NO.	AREAS		
	AREAS CHECKED		

ORIGINAL SURVEY	SURVEYED	BY	DATE
	PLOTTED		
NOTE BOOK	TEMPLATE		
NO.	AREAS		
	AREAS CHECKED		

MODEL: IL_9_1_74+41.20 R4 [Sheet]
FILE NAME: V:\d216 - IL 9 Bloomington\CADD\CADD Sheets\D5705855-sht-xsc.dgn

Hutchison Engineering, Inc.

USER NAME = BDeCraene	DESIGNED -	REVISED -
	DRAWN -	REVISED -
PLOT SCALE = 0.16666633 ' / In.	CHECKED -	REVISED -
PLOT DATE = 10/17/2023	DATE -	REVISED -

STATE OF ILLINOIS
DEPARTMENT OF TRANSPORTATION

FAP 693 (IL RTE 9)
W MARKET ST CROSS SECTIONS

SCALE: H=10 V=5 | SHEET 12 OF 28 SHEETS | STA. 74+41.20 | TO STA. 75+15.36

F.A.P. RTE.	SECTION	COUNTY	TOTAL SHEETS	SHEET NO.
693	(129,109)RS3(16,4.1)CS(10FR)RS	McLEAN	218	193
		CONTRACT NO. 70855		
	ILLINOIS	FED. AID PROJECT		

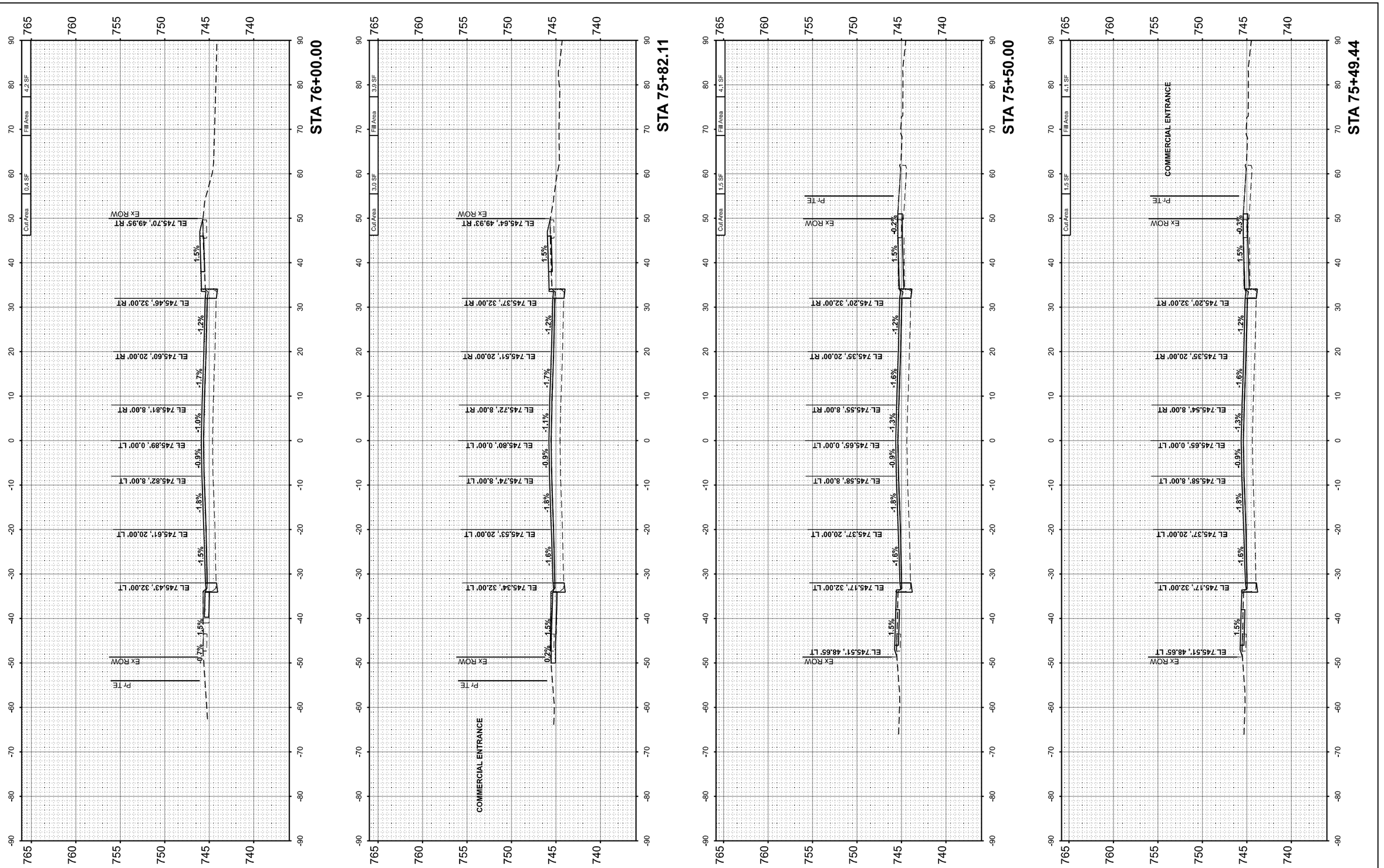

FINAL SURVEY		BY	DATE
	SURVEYED		
	PLOTTED		
NOTE BOOK	TEMPLATE		
	AREAS		
NO.	AREAS CHECKED		

ORIGINAL SURVEY		BY	DATE
	SURVEYED		
	PLOTTED		
NOTE BOOK	TEMPLATE		
	AREAS		
NO.	AREAS CHECKED		

MODEL: IL_9_1_75+49.44 RS [Sheet]
FILE NAME: V:\421\fl - IL 9 Bloomington\CADD\CADD Sheets\D5707855-alil-xsc.dgn

Hutchison Engineering, Inc.

USER NAME = BDeCraene	DESIGNED -	REVISED -
	DRAWN -	REVISED -
PLOT SCALE = 0.16666633 ' / In.	CHECKED -	REVISED -
PLOT DATE = 10/17/2023	DATE -	REVISED -

STATE OF ILLINOIS
DEPARTMENT OF TRANSPORTATION

FAP 693 (IL RTE 9)
W MARKET ST CROSS SECTIONS

SCALE: H=10 V=5 | SHEET 13 OF 28 SHEETS | STA. 75+49.44 | TO STA. 76+00.00

F.A.P. RTE.	SECTION	COUNTY	TOTAL SHEETS	SHEET NO.
693	(129,109)RS3(16,4.1)CS(10FR)RS	McLEAN	218	194
		CONTRACT NO. 70855		
	ILLINOIS FED. AID PROJECT			

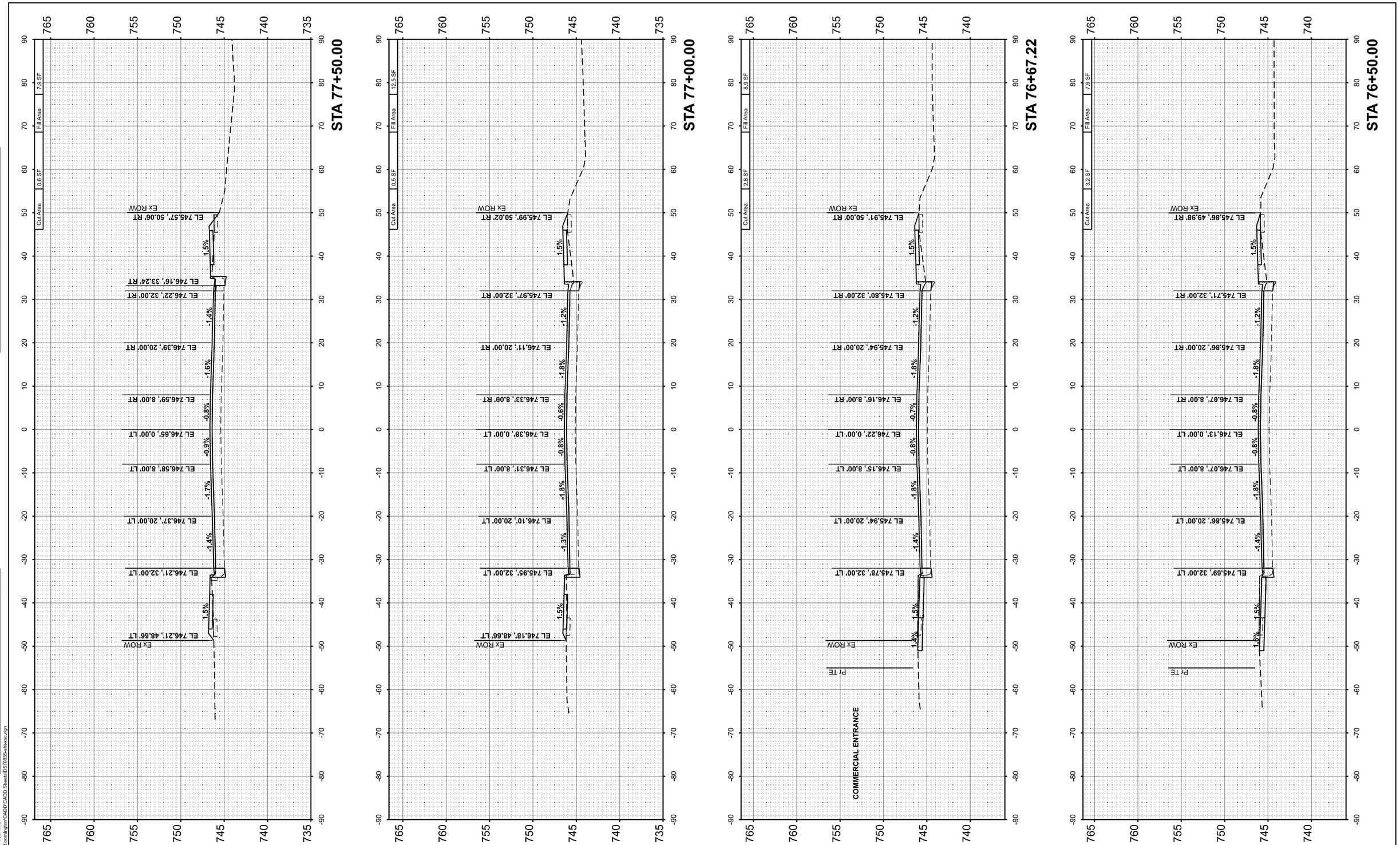

FINAL SURVEY		BY	DATE
	SURVEYED		
	PLOTTED		
NOTE BOOK	TEMPLATE		
	AREAS		
NO.	AREAS CHECKED		

ORIGINAL SURVEY		BY	DATE
	SURVEYED		
	PLOTTED		
NOTE BOOK	TEMPLATE		
	AREAS		
NO.	AREAS CHECKED		

MODEL: IL_9_1_76+50.00 RS [Sheet]
FILE NAME: V:\421\6 - IL 9 Bloomington\CADD\CADD Sheets\D5707855-alil-xsc.dgn

Hutchison Engineering, Inc.

USER NAME = BDeCraene	DESIGNED -	REVISED -
	DRAWN -	REVISED -
PLOT SCALE = 0.16666633 ' / In.	CHECKED -	REVISED -
PLOT DATE = 10/17/2023	DATE -	REVISED -

STATE OF ILLINOIS
DEPARTMENT OF TRANSPORTATION

FAP 693 (IL RTE 9)
W MARKET ST CROSS SECTIONS

SCALE: H=10 V=5 | SHEET 14 OF 28 SHEETS | STA. 76+50.00 | TO STA. 77+50.00

F.A.P. RTE.	SECTION	COUNTY	TOTAL SHEETS	SHEET NO.
693	(129,109)RS3(16,4.1)CS(10FR)RS	McLEAN	218	195
		CONTRACT NO. 70855		
	ILLINOIS	FED. AID PROJECT		

FINAL SURVEY		BY	DATE
	SURVEYED		
	PLOTTED		
NOTE BOOK	TEMPLATE		
	AREAS		
NO.	AREAS CHECKED		

ORIGINAL SURVEY		BY	DATE
	SURVEYED		
	PLOTTED		
NOTE BOOK	TEMPLATE		
	AREAS		
NO.	AREAS CHECKED		

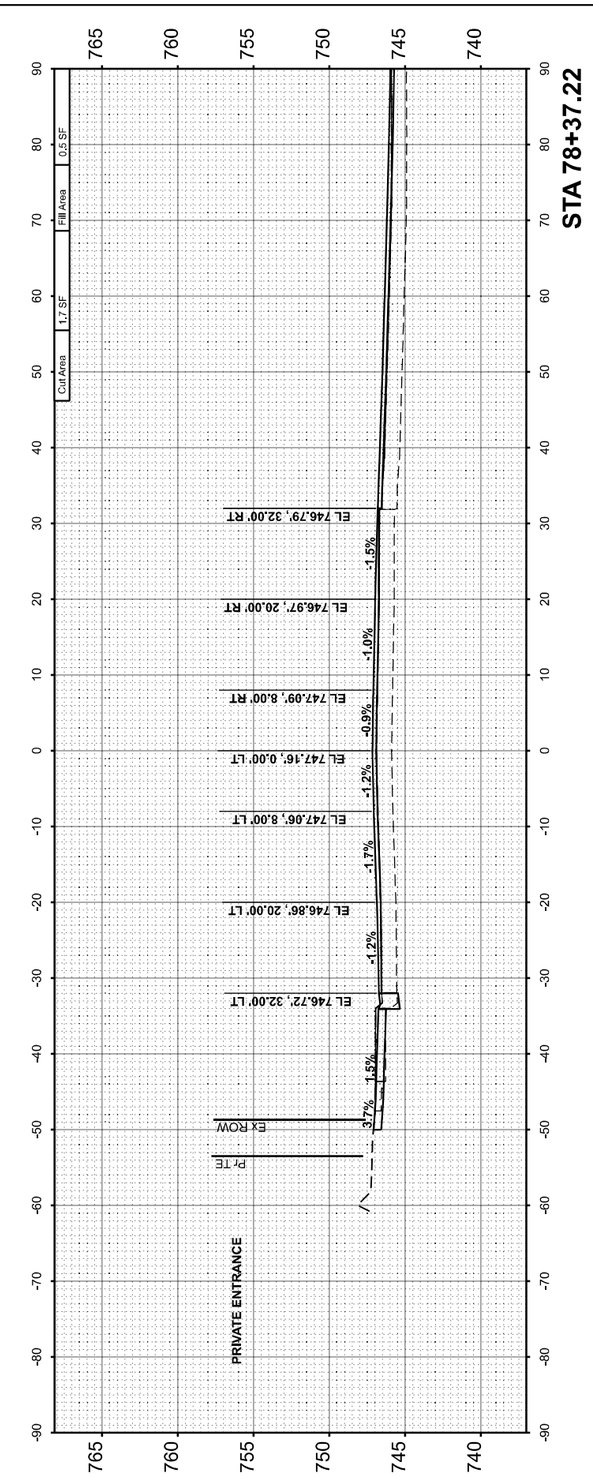

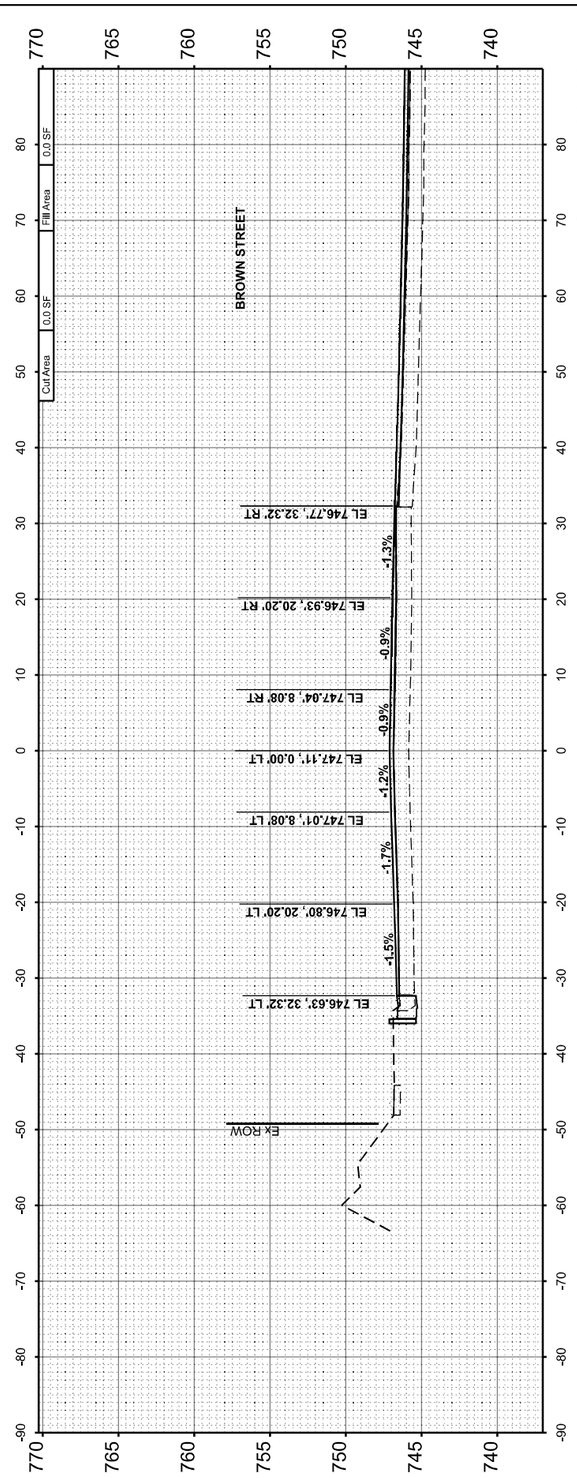

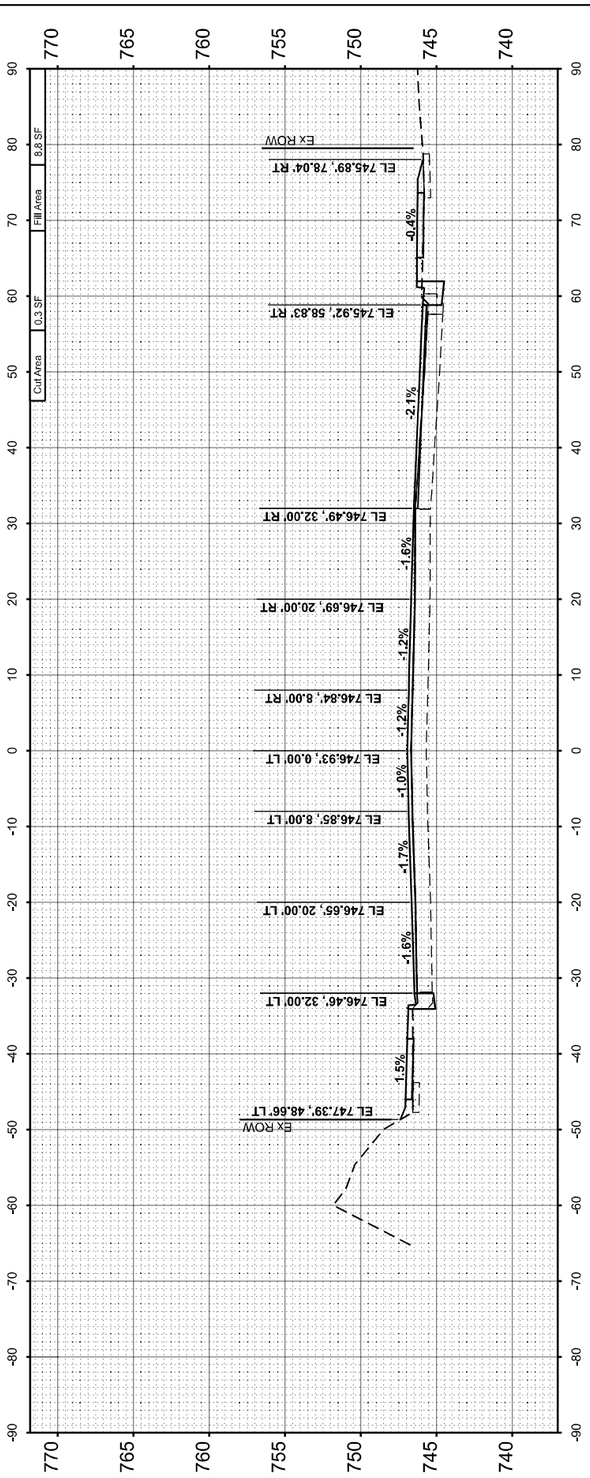

MODEL: IL_9_1_-78+00.00 R5 [Sheet]
FILE NAME: \\v4216 - IL 9 Bloomington\CADD\CADD Sheets\D5T0855-alt-xsc.dgn

Hutchison Engineering, Inc.

USER NAME = BDeCraene	DESIGNED -	REVISED -
	DRAWN -	REVISED -
PLOT SCALE = 0.16666633 ' / in.	CHECKED -	REVISED -
PLOT DATE = 10/17/2023	DATE -	REVISED -

STATE OF ILLINOIS
DEPARTMENT OF TRANSPORTATION

FAP 693 (IL RTE 9)
W MARKET ST CROSS SECTIONS

SCALE: H=10 V=5 | SHEET 15 OF 28 SHEETS | STA. 78+00.00 | TO STA. 78+37.22

F.A.P. RTE.	SECTION	COUNTY	TOTAL SHEETS	SHEET NO.
693	(129,109)RS3(16,4.1)CS(10FR)RS	McLEAN	218	196
		CONTRACT NO. 70855		
	ILLINOIS FED. AID PROJECT			

FINAL SURVEY		BY	DATE
	SURVEYED		
	PLOTTED		
NOTE BOOK	TEMPLATE		
	AREAS		
NO.	AREAS CHECKED		

ORIGINAL SURVEY		BY	DATE
	SURVEYED		
	PLOTTED		
NOTE BOOK	TEMPLATE		
	AREAS		
NO.	AREAS CHECKED		

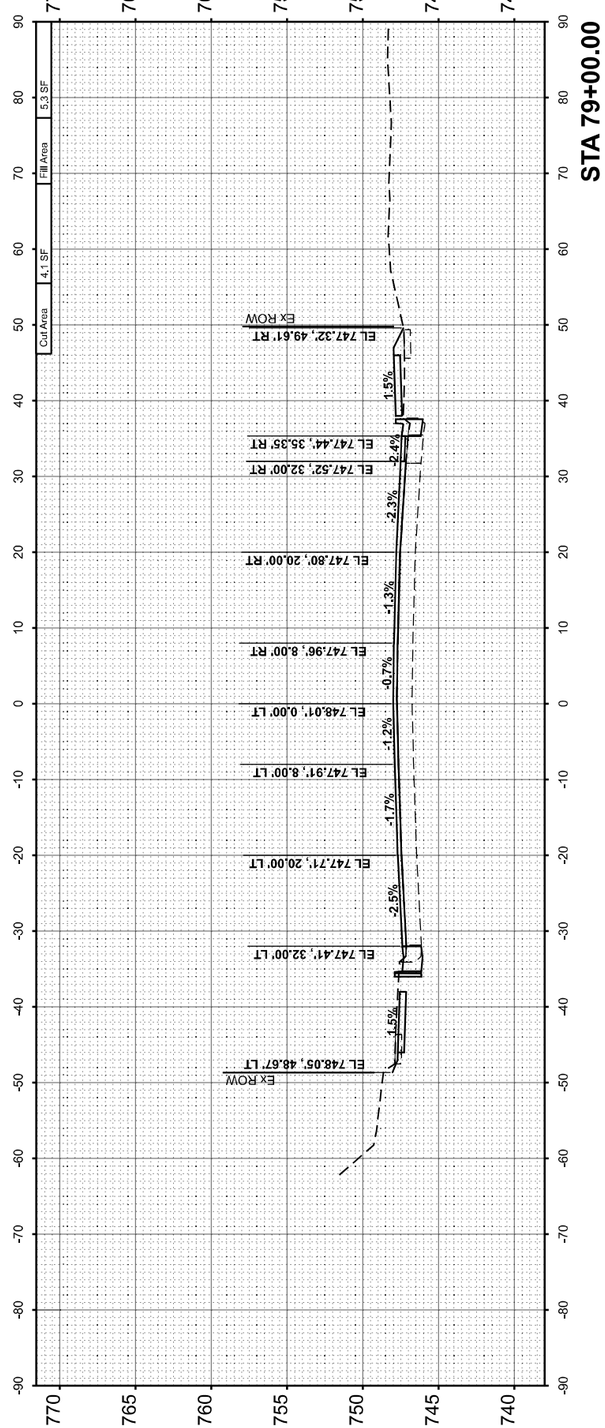

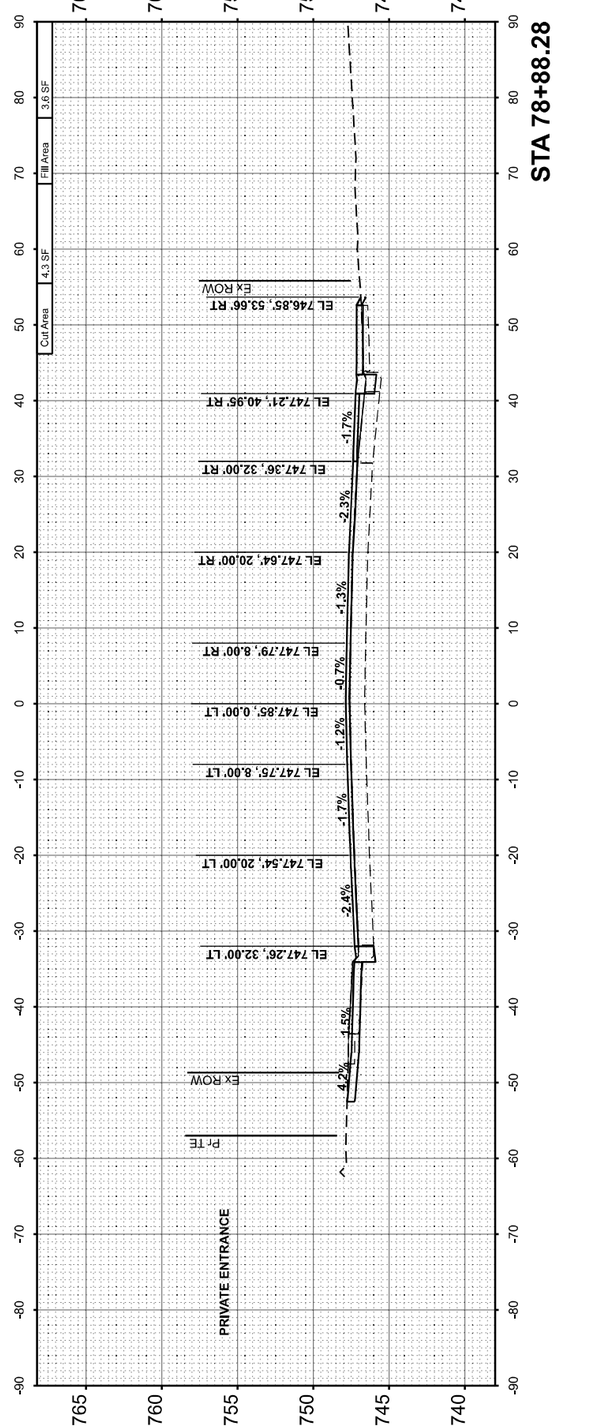

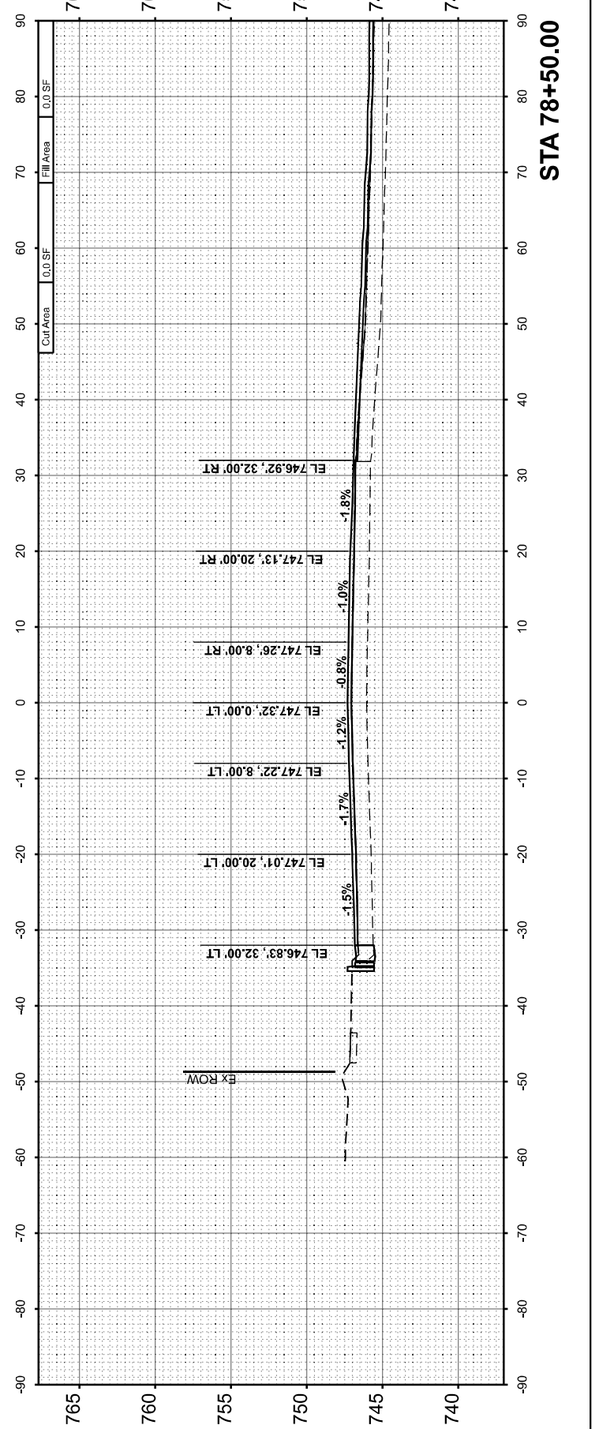

MODEL: IL_9_1 - 78+50.00 RS [Sheet]
FILE NAME: V:\4216 - IL 9 Bloomington\CADD\CADD Sheets\D570855-sht-sec.dgn

Hutchison Engineering, Inc.	USER NAME = BDeCraene	DESIGNED -	REVISED -
		DRAWN -	REVISED -
	PLOT SCALE = 0.16666633 ' / In.	CHECKED -	REVISED -
	PLOT DATE = 10/17/2023	DATE -	REVISED -

STATE OF ILLINOIS
DEPARTMENT OF TRANSPORTATION

FAP 693 (IL RTE 9)
W MARKET ST CROSS SECTIONS

SCALE: H=10 V=5 | SHEET 16 OF 28 SHEETS | STA. 78+50.00 | TO STA. 79+00.00

F.A.P. RTE.	SECTION	COUNTY	TOTAL SHEETS	SHEET NO.
693	(129,109)RS3(16,4.1)CS(10FR)RS	McLEAN	218	197
		CONTRACT NO. 70855		
	ILLINOIS	FED. AID PROJECT		

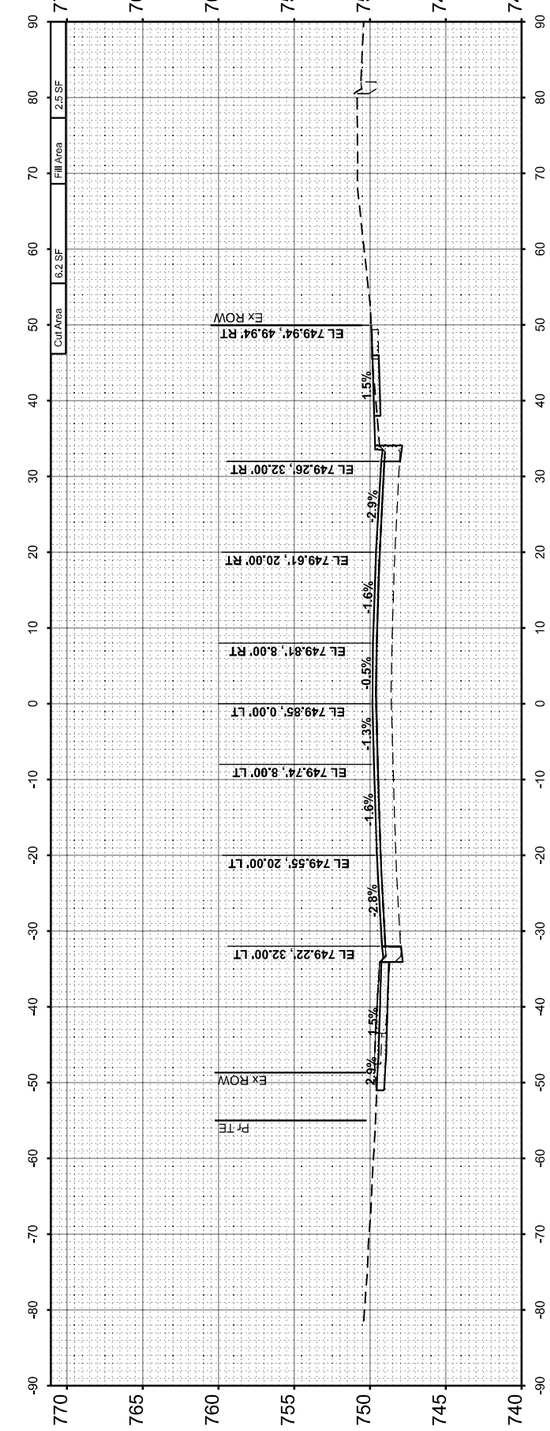

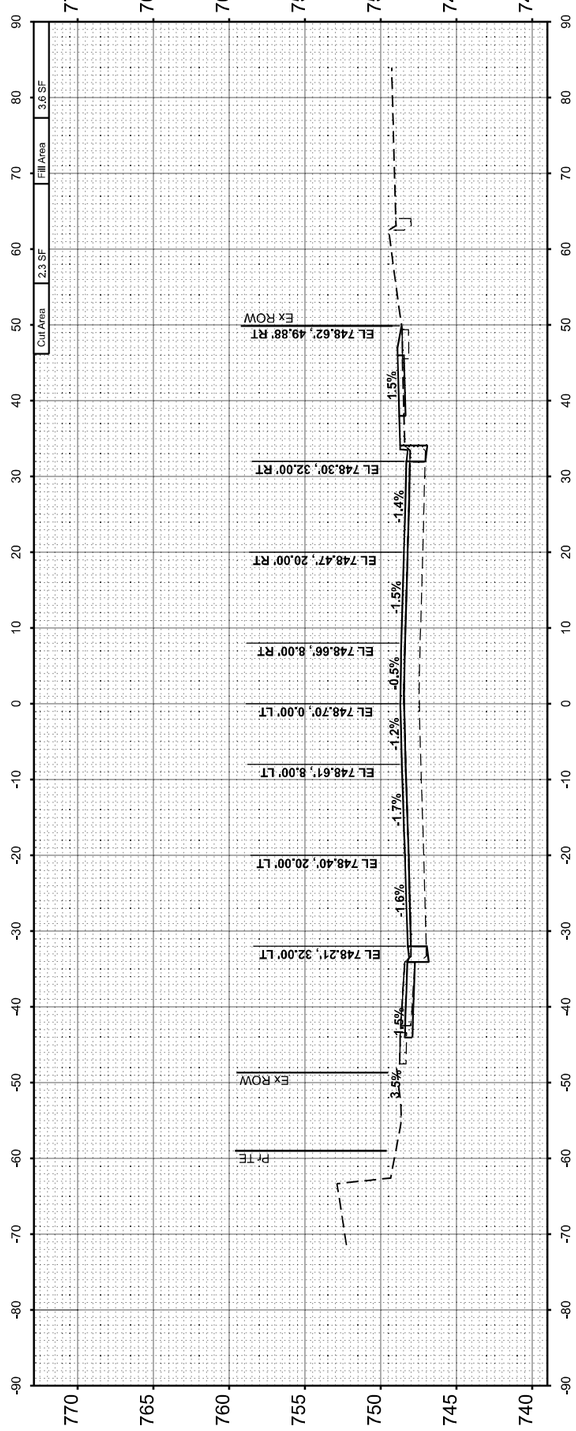

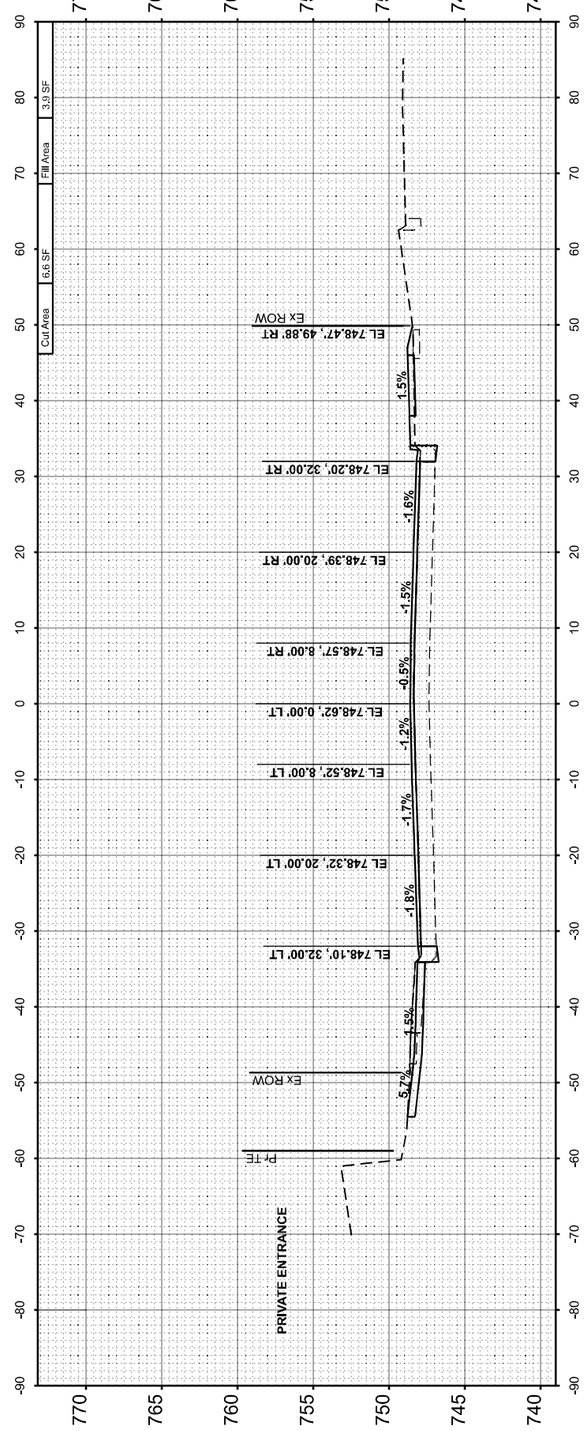

FINAL SURVEY		BY	DATE
NOTE BOOK	SURVEYED		
NO.	PLOTTED		
	TEMPLATE		
	AREAS		
	AREAS CHECKED		

ORIGINAL SURVEY		BY	DATE
NOTE BOOK	SURVEYED		
NO.	PLOTTED		
	TEMPLATE		
	AREAS		
	AREAS CHECKED		

MODEL: IL_1 - 79+43.87 RS [Sheet]
FILE NAME: V:\4218 - IL 9 Bloomington\CADD\CADD Sheets\D5708855xsIlseax.dgn

Hutchison Engineering, Inc.

USER NAME = BDeCraene	DESIGNED -	REVISED -
	DRAWN -	REVISED -
PLOT SCALE = 0.16666633 ' / In.	CHECKED -	REVISED -
PLOT DATE = 10/17/2023	DATE -	REVISED -

STATE OF ILLINOIS
DEPARTMENT OF TRANSPORTATION

FAP 693 (IL RTE 9)
W MARKET ST CROSS SECTIONS

SCALE: H=10 V=5 | SHEET 17 OF 28 SHEETS | STA. 79+43.87 | TO STA. 80+00.00

F.A.P. RTE.	SECTION	COUNTY	TOTAL SHEETS	SHEET NO.
693	(129,109)RS3(16,4.1)CS(10FR)RS	McLEAN	218	198
		CONTRACT NO. 70855		
	ILLINOIS	FED. AID PROJECT		

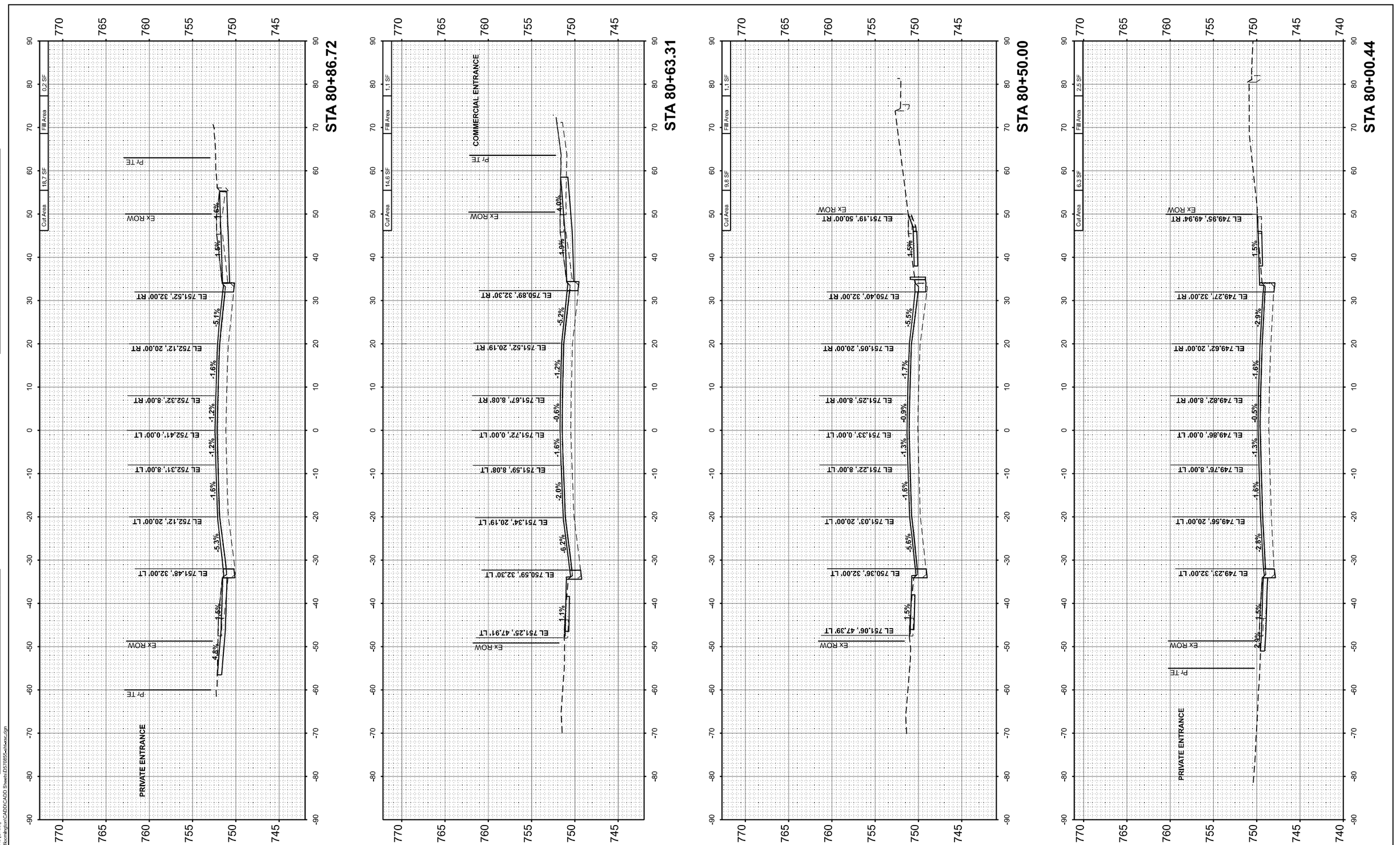

FINAL SURVEY		BY	DATE
NOTE BOOK NO.	SURVEYED		
	PLOTTED		
	TEMPLATE		
	AREAS		
	AREAS CHECKED		

ORIGINAL SURVEY		BY	DATE
NOTE BOOK NO.	SURVEYED		
	PLOTTED		
	TEMPLATE		
	AREAS		
	AREAS CHECKED		

MODEL: IL_9_1 - 80+00.44 RS [Sheet]
FILE NAME: V:\4216 - IL 9 Bloomington\CADD\CADD Sheets\D570855-sht-esc.dgn

Hutchison Engineering, Inc.

USER NAME = BDeCraene	DESIGNED -	REVISED -	
	DRAWN -	REVISED -	
PLOT SCALE = 0.16666633 ' / in.	CHECKED -	REVISED -	
PLOT DATE = 10/17/2023	DATE -	REVISED -	

STATE OF ILLINOIS
DEPARTMENT OF TRANSPORTATION

FAP 693 (IL RTE 9)
W MARKET ST CROSS SECTIONS

SCALE: H=10 V=5 | SHEET 18 OF 28 SHEETS | STA. 80+00.44 TO STA. 80+86.72

F.A.P. RTE.	SECTION	COUNTY	TOTAL SHEETS	SHEET NO.
693	(129,109)RS3(16,4.1)CS(10FR)RS	McLEAN	218	199

CONTRACT NO. 70855

ILLINOIS FED. AID PROJECT

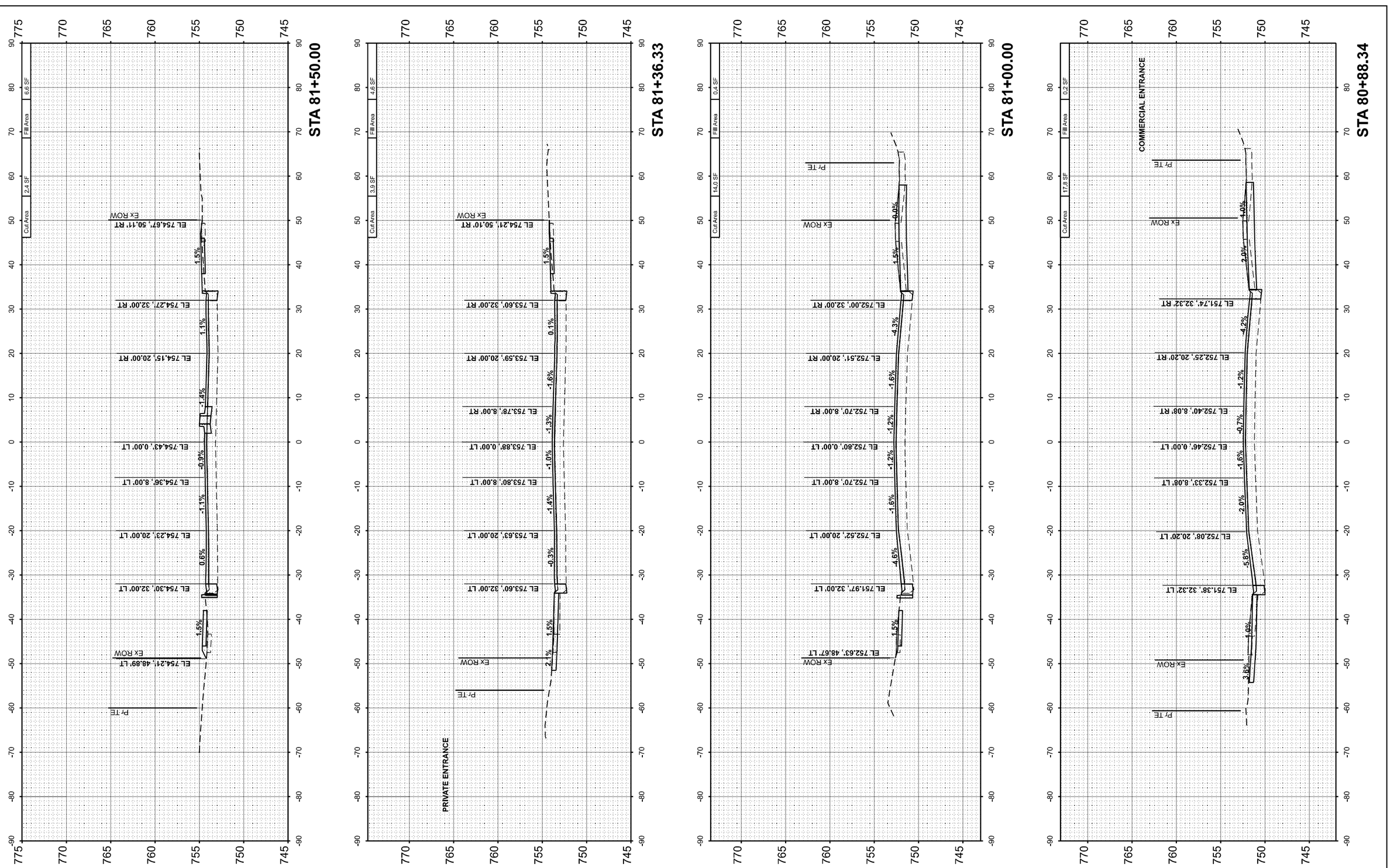

FINAL SURVEY	SURVEYED	BY	DATE
	PLOTTED		
NOTE BOOK	TEMPLATE		
NO.	AREAS		
	AREAS CHECKED		

ORIGINAL SURVEY	SURVEYED	BY	DATE
	PLOTTED		
NOTE BOOK	TEMPLATE		
NO.	AREAS		
	AREAS CHECKED		

MODEL: IL_9_1 - 80+88.34 RS [Sheet]
FILE NAME: V:\4216 - IL 9 Bloomington\CADD\CADD Sheets\D5707855-alil-xsc.dgn

Hutchison Engineering, Inc.

USER NAME = BDeCraene	DESIGNED -	REVISED -
	DRAWN -	REVISED -
PLOT SCALE = 0.16666633 ' / In.	CHECKED -	REVISED -
PLOT DATE = 10/17/2023	DATE -	REVISED -

STATE OF ILLINOIS
DEPARTMENT OF TRANSPORTATION

FAP 693 (IL RTE 9)
W MARKET ST CROSS SECTIONS

SCALE: H=10 V=5 | SHEET 19 OF 28 SHEETS | STA. 80+88.34 | TO STA. 81+50.00

F.A.P. RTE.	SECTION	COUNTY	TOTAL SHEETS	SHEET NO.
693	(129,109)RS3(16,4.1)CS(10FR)RS	McLEAN	218	200
		CONTRACT NO. 70855		
	ILLINOIS	FED. AID PROJECT		

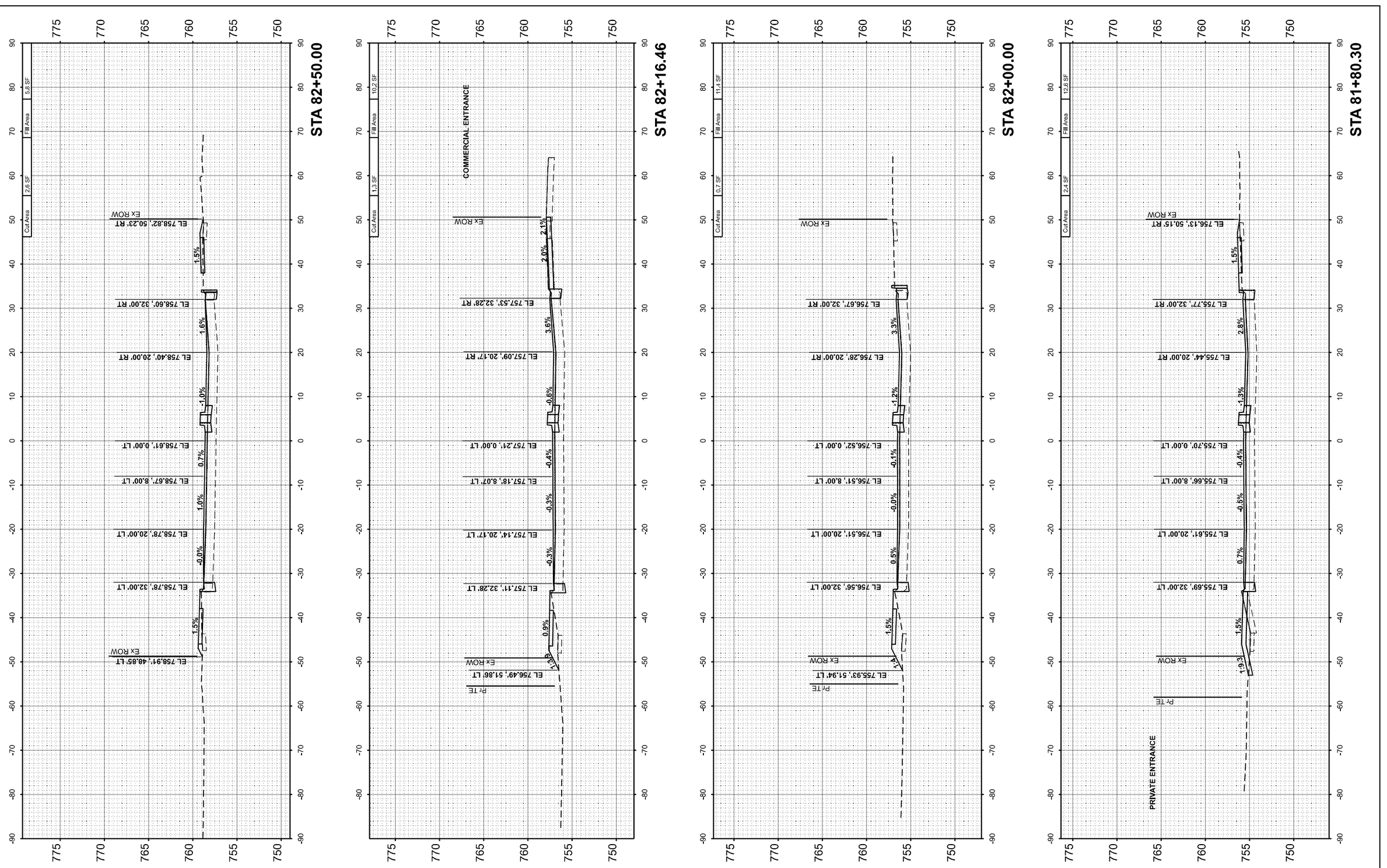

FINAL SURVEY		BY	DATE
	SURVEYED		
	PLOTTED		
NOTE BOOK	TEMPLATE		
	AREAS		
NO.	AREAS CHECKED		

ORIGINAL SURVEY		BY	DATE
	SURVEYED		
	PLOTTED		
NOTE BOOK	TEMPLATE		
	AREAS		
NO.	AREAS CHECKED		

MODEL: IL_9_1 - 81+80.30 RS [Sheet]
FILE NAME: V:\4216 - IL 9 Bloomington\CADD\CADD Sheets\D5707855-alil-xsc.dgn

Hutchison Engineering, Inc.

USER NAME = BDeCraene	DESIGNED -	REVISED -
	DRAWN -	REVISED -
PLOT SCALE = 0.16666633 ' / In.	CHECKED -	REVISED -
PLOT DATE = 10/17/2023	DATE -	REVISED -

STATE OF ILLINOIS
DEPARTMENT OF TRANSPORTATION

FAP 693 (IL RTE 9)
W MARKET ST CROSS SECTIONS

SCALE: H=10 V=5 | SHEET 20 OF 28 SHEETS | STA. 81+80.30 | TO STA. 82+50.00

F.A.P. RTE.	SECTION	COUNTY	TOTAL SHEETS	SHEET NO.
693	(129,109)RS3(16,4.1)CS(10FR)RS	McLEAN	218	201
		CONTRACT NO. 70855		
	ILLINOIS	FED. AID PROJECT		

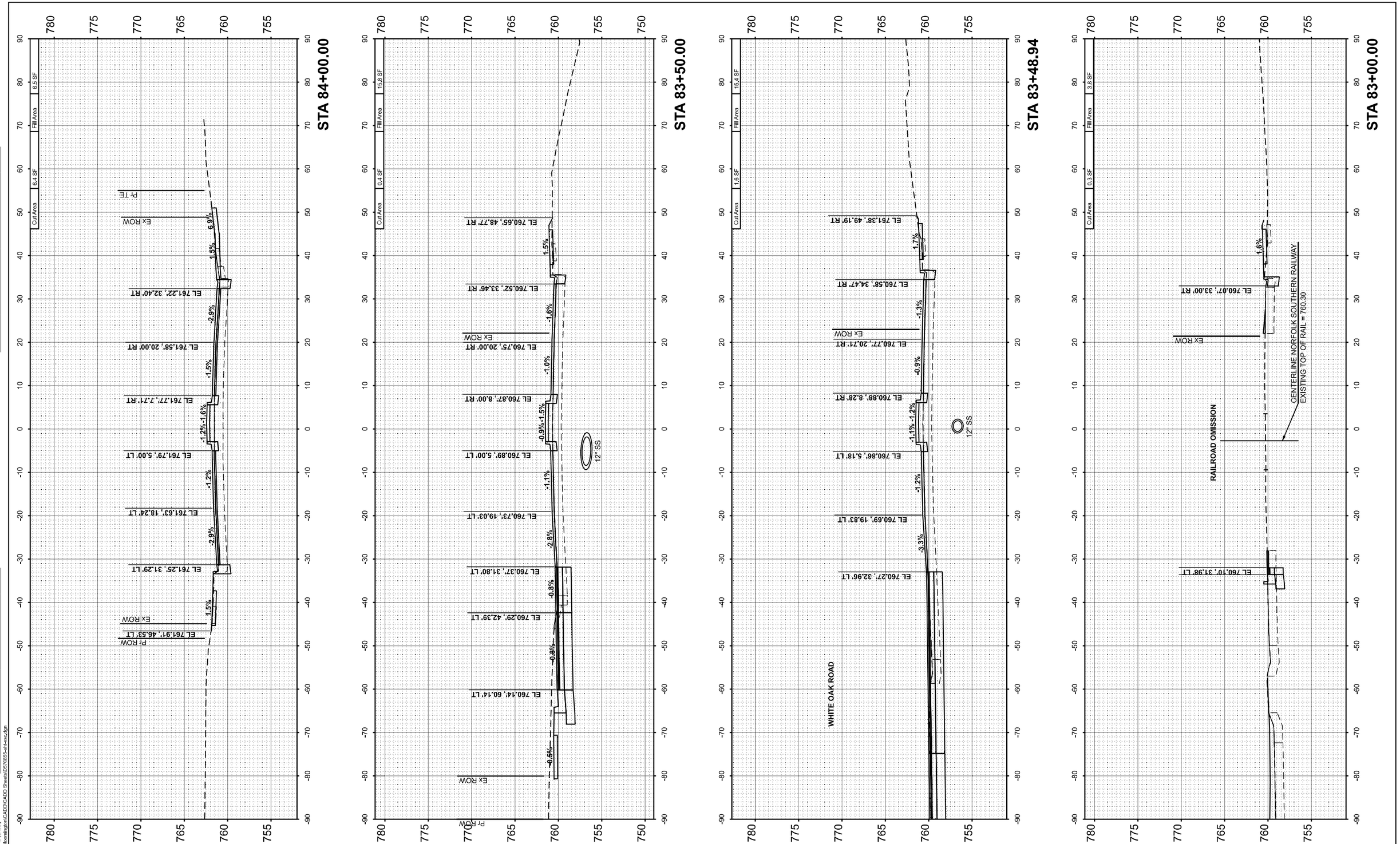

FINAL SURVEY		BY	DATE
NOTE BOOK	SURVEYED		
NO.	PLOTTED		
	TEMPLATE		
	AREAS		
	AREAS CHECKED		

ORIGINAL SURVEY		BY	DATE
NOTE BOOK	SURVEYED		
NO.	PLOTTED		
	TEMPLATE		
	AREAS		
	AREAS CHECKED		

MODEL: IL_9_1 - 83+00.00 R5 [Sheet]
FILE NAME: V:\4216 - IL 9 Bloomington\CADD\CADD Sheets\D570855-sht-xsc.dgn

Hutchison Engineering, Inc.

USER NAME = BDeCraene	DESIGNED -	REVISED - 11/16/2023	
	DRAWN -	REVISED -	
PLOT SCALE = 0.16666633 ' / in.	CHECKED -	REVISED -	
PLOT DATE = 11/17/2023	DATE -	REVISED -	

STATE OF ILLINOIS
DEPARTMENT OF TRANSPORTATION

FAP 693 (IL RTE 9)
W MARKET ST CROSS SECTIONS

SCALE: H=10 V=5 | SHEET 21 OF 28 SHEETS | STA. 83+00.00 TO STA. 84+00.00

F.A.P. RTE.	SECTION	COUNTY	TOTAL SHEETS	SHEET NO.
693	(129,109)RS3(16,4.1)CS(10FR)RS	McLEAN	218	202

CONTRACT NO. 70855

ILLINOIS | FED. AID PROJECT

FINAL SURVEY		BY	DATE
	SURVEYED		
	PLOTTED		
NOTE BOOK	TEMPLATE		
	AREAS		
NO.	AREAS CHECKED		

ORIGINAL SURVEY		BY	DATE
	SURVEYED		
	PLOTTED		
NOTE BOOK	TEMPLATE		
	AREAS		
NO.	AREAS CHECKED		

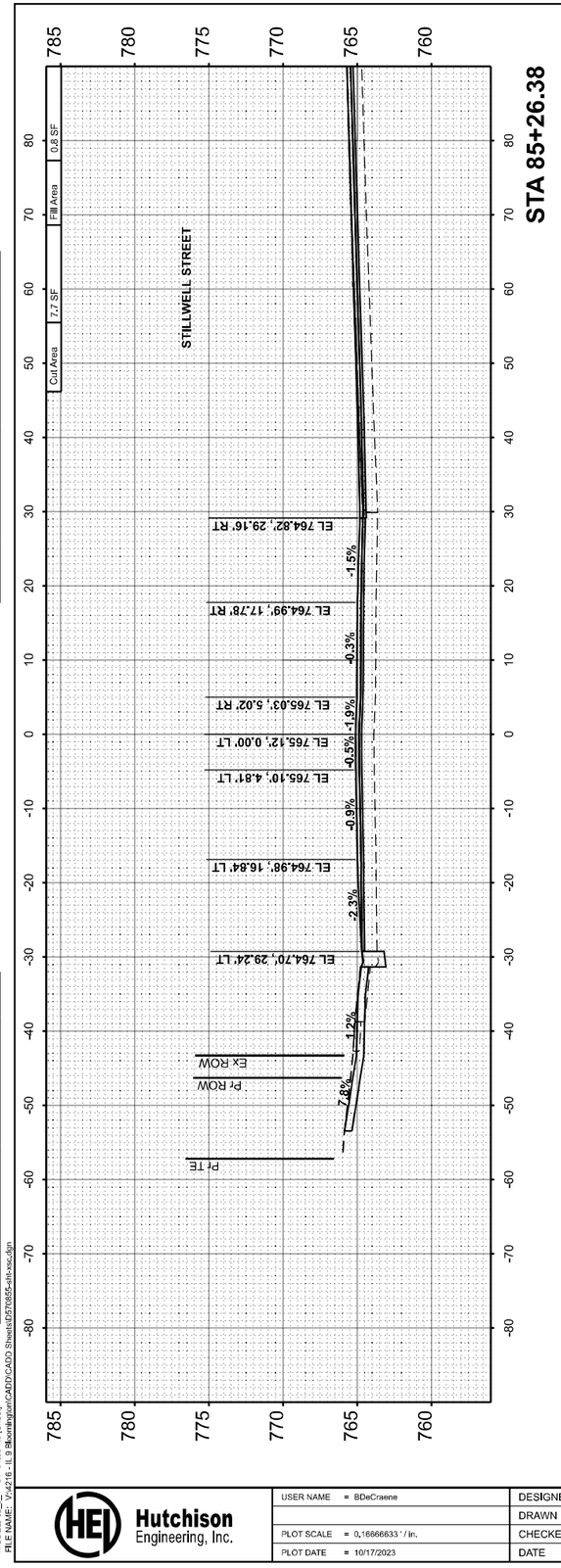

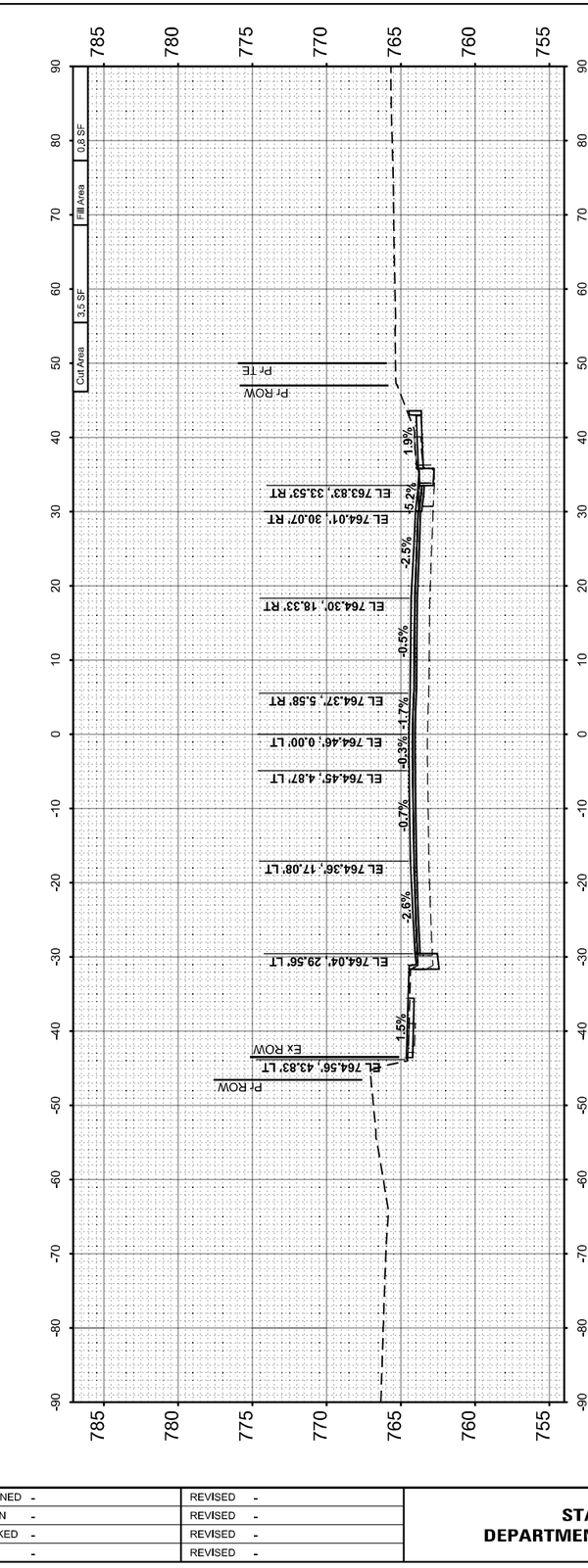

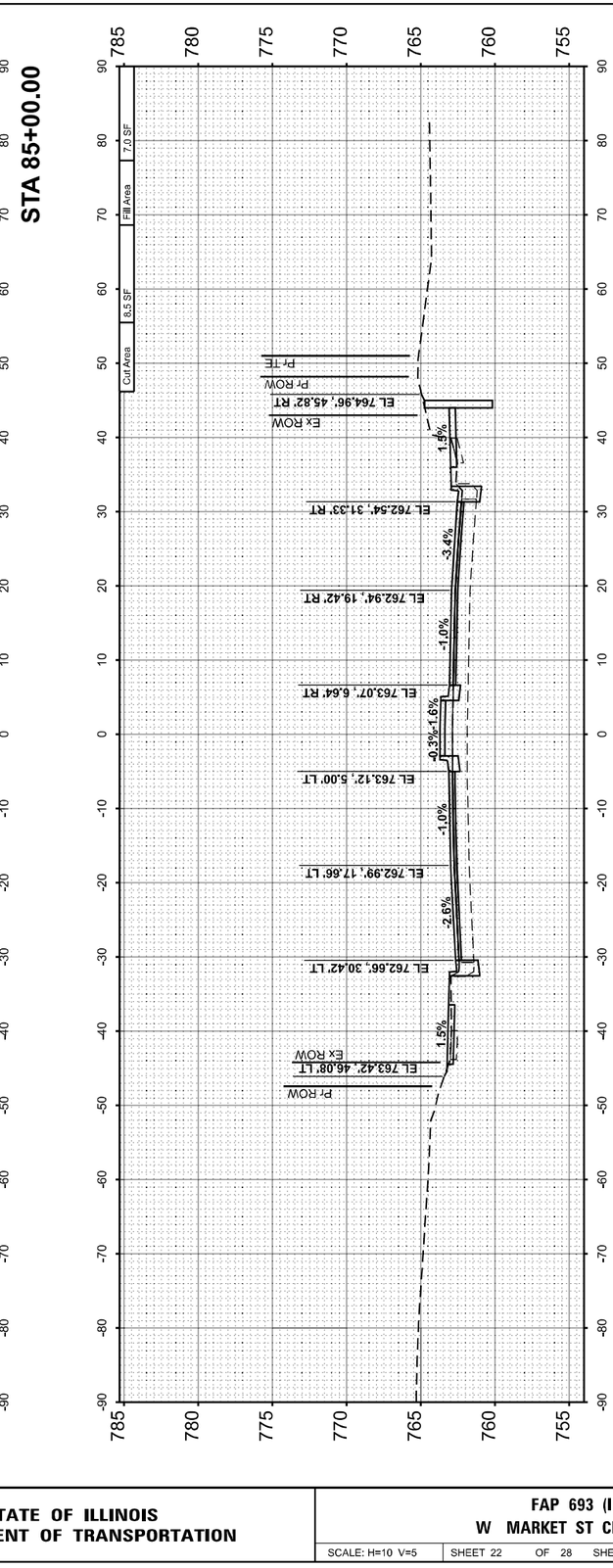

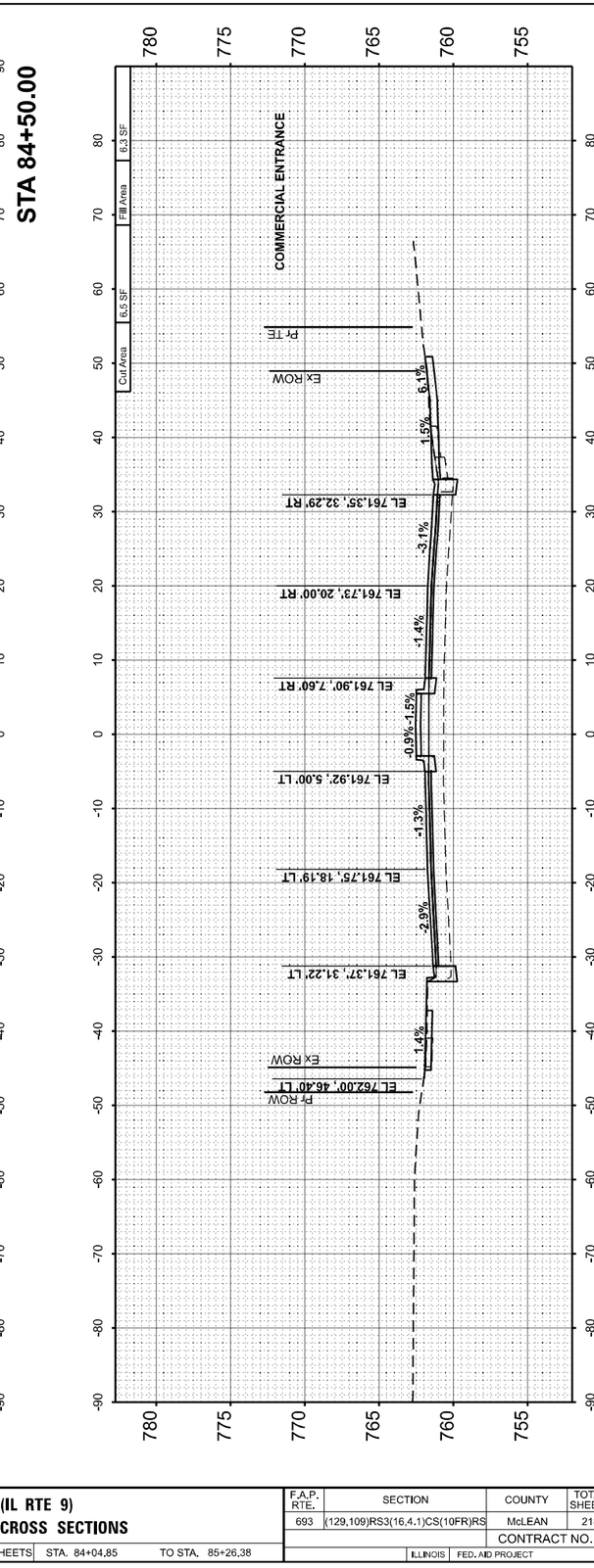

MODEL: IL_9_1 - 84+04.85 RS [Sheet]
FILE NAME: T:\4216 - IL 9 Bloomington\CADD\CADD Sheets\D570855-sht-xsc.dgn

Hutchison Engineering, Inc.

USER NAME = BDeCraene	DESIGNED -	REVISED -	
	DRAWN -	REVISED -	
PLOT SCALE = 0.16666633 ' / In.	CHECKED -	REVISED -	
PLOT DATE = 10/17/2023	DATE -	REVISED -	

STATE OF ILLINOIS
DEPARTMENT OF TRANSPORTATION

FAP 693 (IL RTE 9)
W MARKET ST CROSS SECTIONS

SCALE: H=10 V=5 | SHEET 22 OF 28 SHEETS | STA. 84+04.85 TO STA. 85+26.38

F.A.P. RTE.	SECTION	COUNTY	TOTAL SHEETS	SHEET NO.
693	(129,109)RS3(16,4.1)CS(10FR)RS	McLEAN	218	203
		CONTRACT NO. 70855		
	ILLINOIS	FED. AID PROJECT		

FINAL SURVEY		BY	DATE
	SURVEYED		
	PLOTTED		
NOTE BOOK	TEMPLATE		
	AREAS		
NO.	AREAS CHECKED		

ORIGINAL SURVEY		BY	DATE
	SURVEYED		
	PLOTTED		
NOTE BOOK	TEMPLATE		
	AREAS		
NO.	AREAS CHECKED		

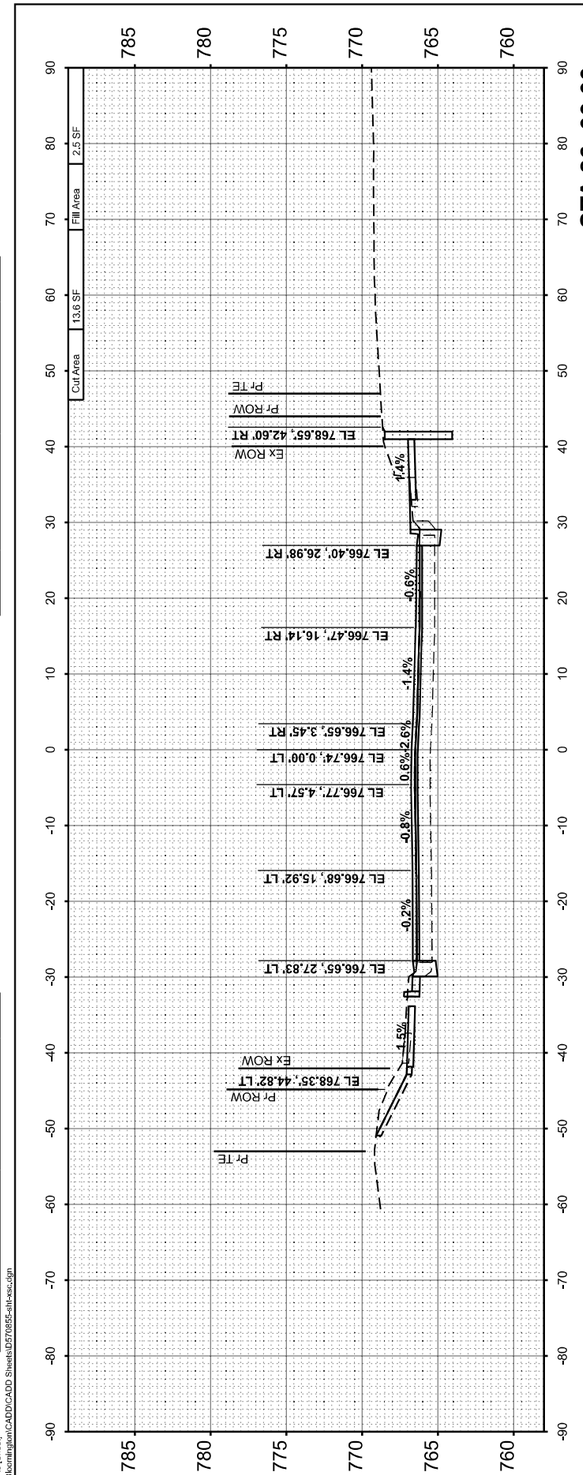

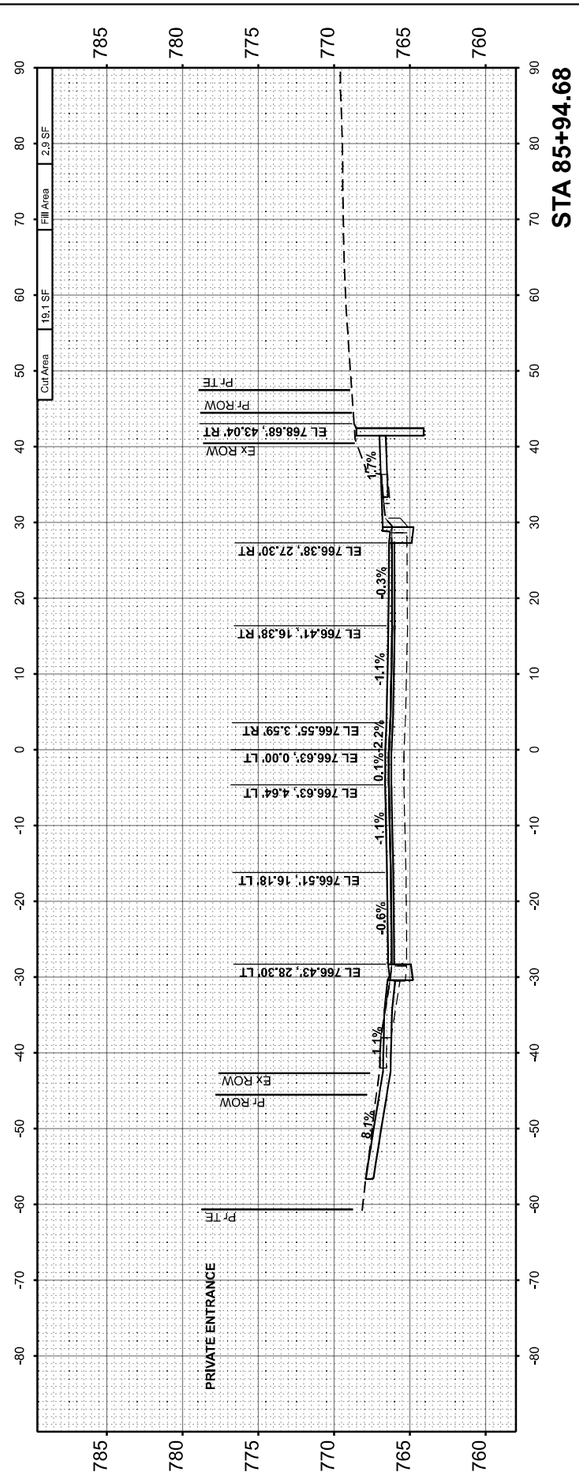

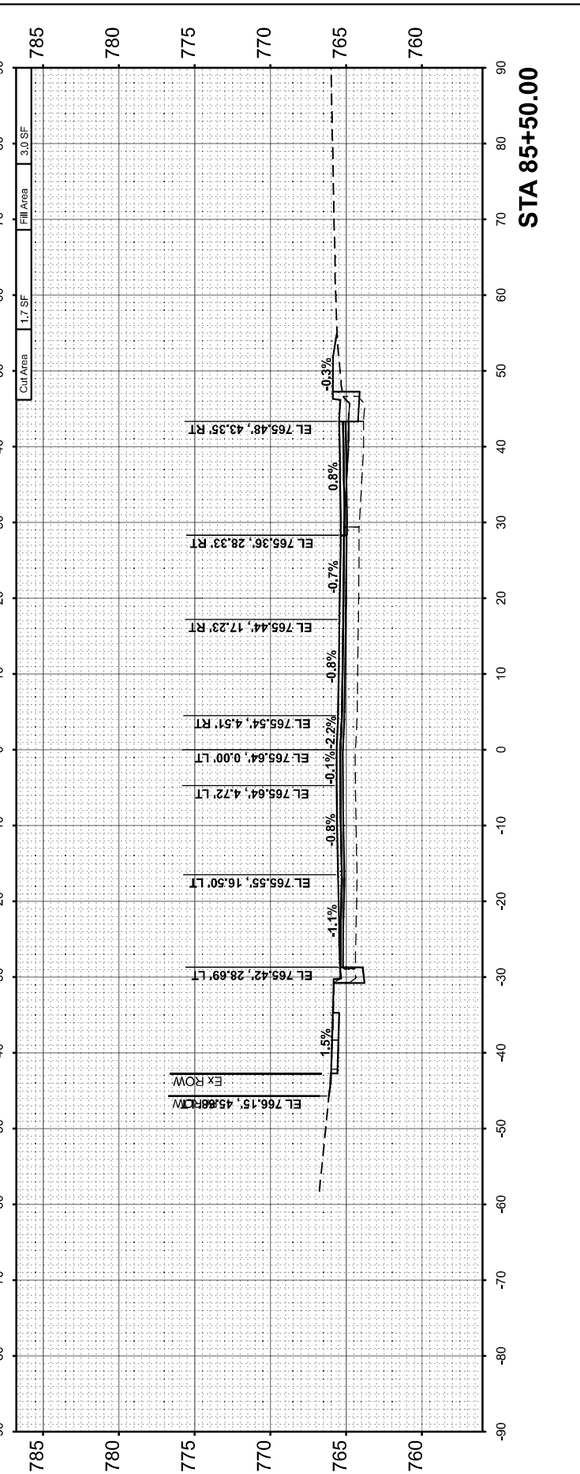

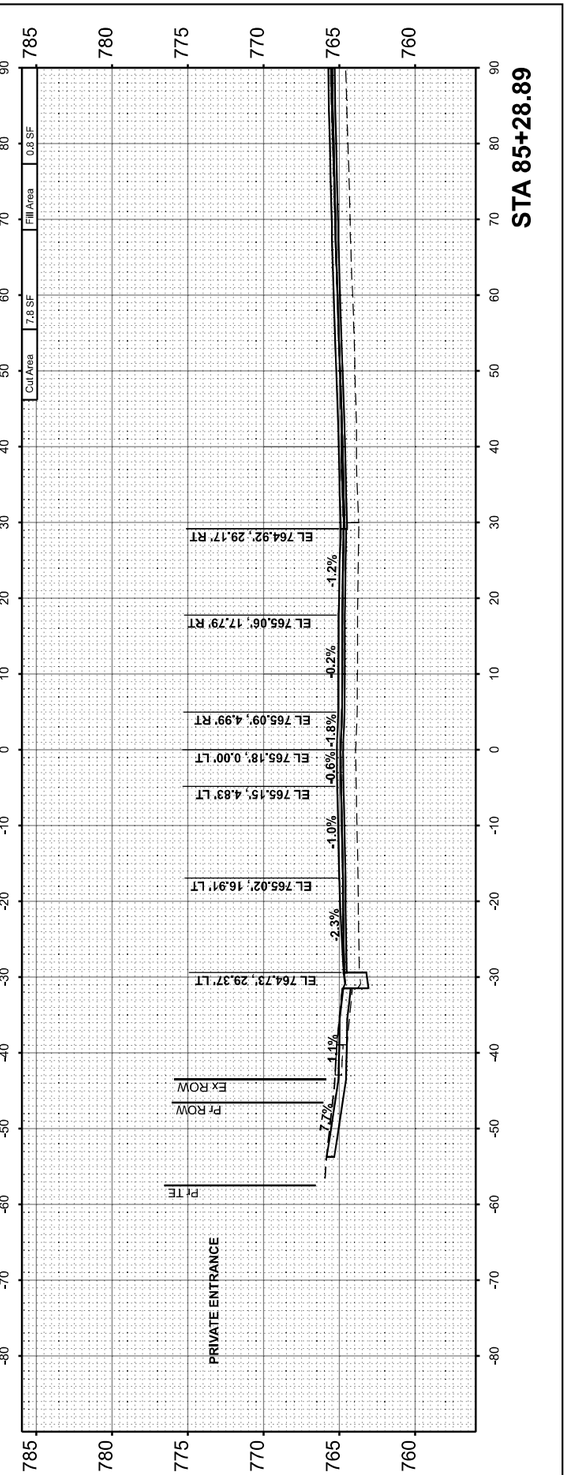

MODEL: IL_9_1 - 85+28.89 R5 [Sheet]
FILE NAME: V:\4216 - IL 9 Bloomington\CADD\CADD Sheets\D570855-sht-exc.dgn

USER NAME = BDeCraene	DESIGNED -	REVISED -	
	DRAWN -	REVISED -	
PLOT SCALE = 0.16666633 ' / In.	CHECKED -	REVISED -	
PLOT DATE = 10/17/2023	DATE -	REVISED -	

Hutchison Engineering, Inc.

STATE OF ILLINOIS
DEPARTMENT OF TRANSPORTATION

FAP 693 (IL RTE 9)
W MARKET ST CROSS SECTIONS

SCALE: H=10 V=5 | SHEET 23 OF 28 SHEETS | STA. 85+28,89 | TO STA. 86+00.00

F.A.P. RTE.	SECTION	COUNTY	TOTAL SHEETS	SHEET NO.
693	(129,109)RS3(16,4.1)CS(10FR)RS	McLEAN	218	204
		CONTRACT NO. 70855		
	ILLINOIS	FED. AID PROJECT		

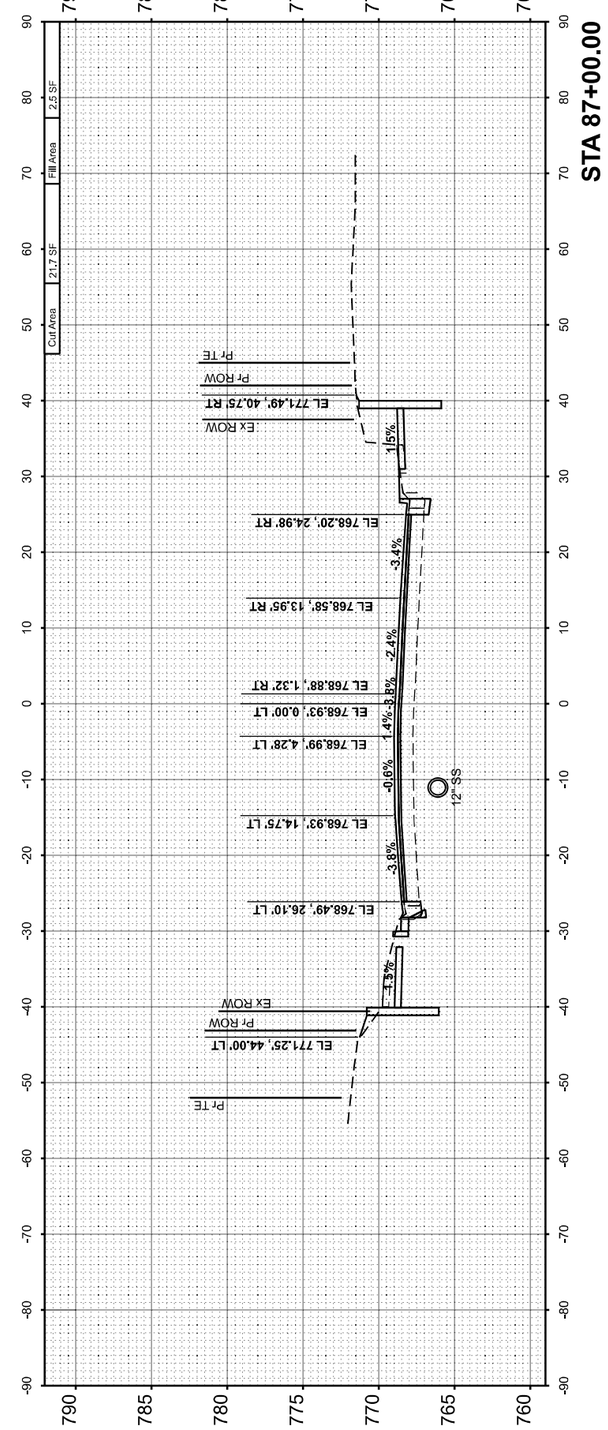

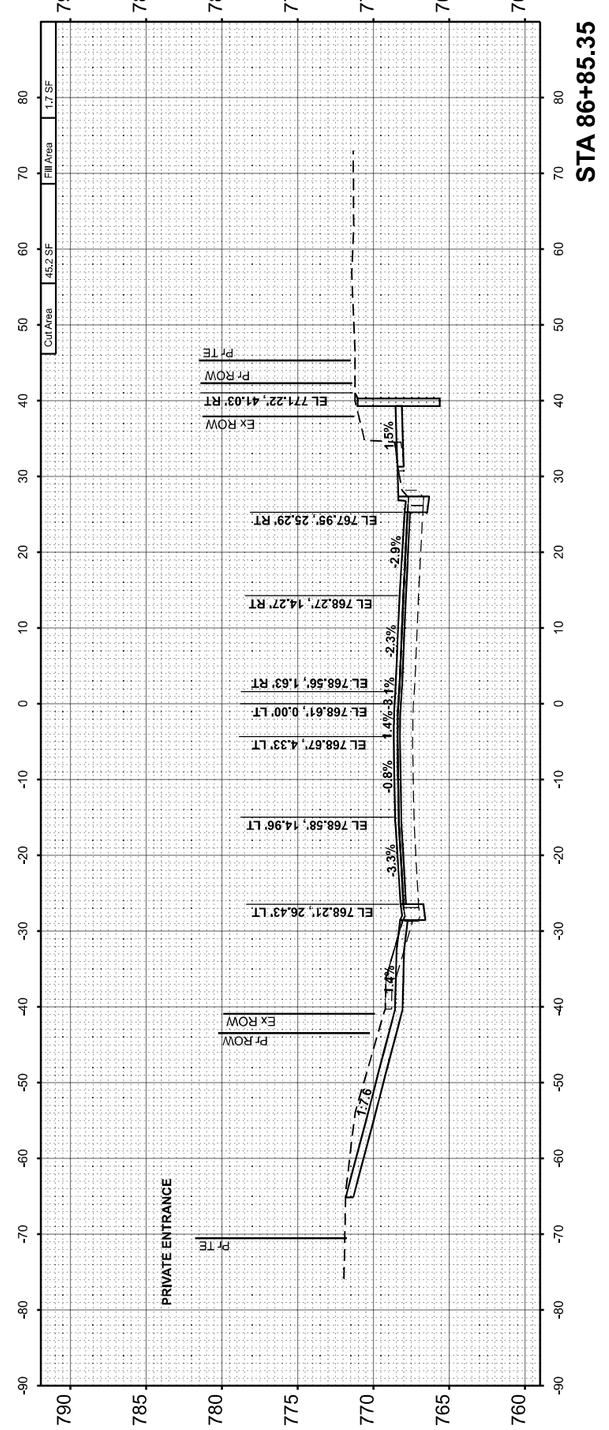

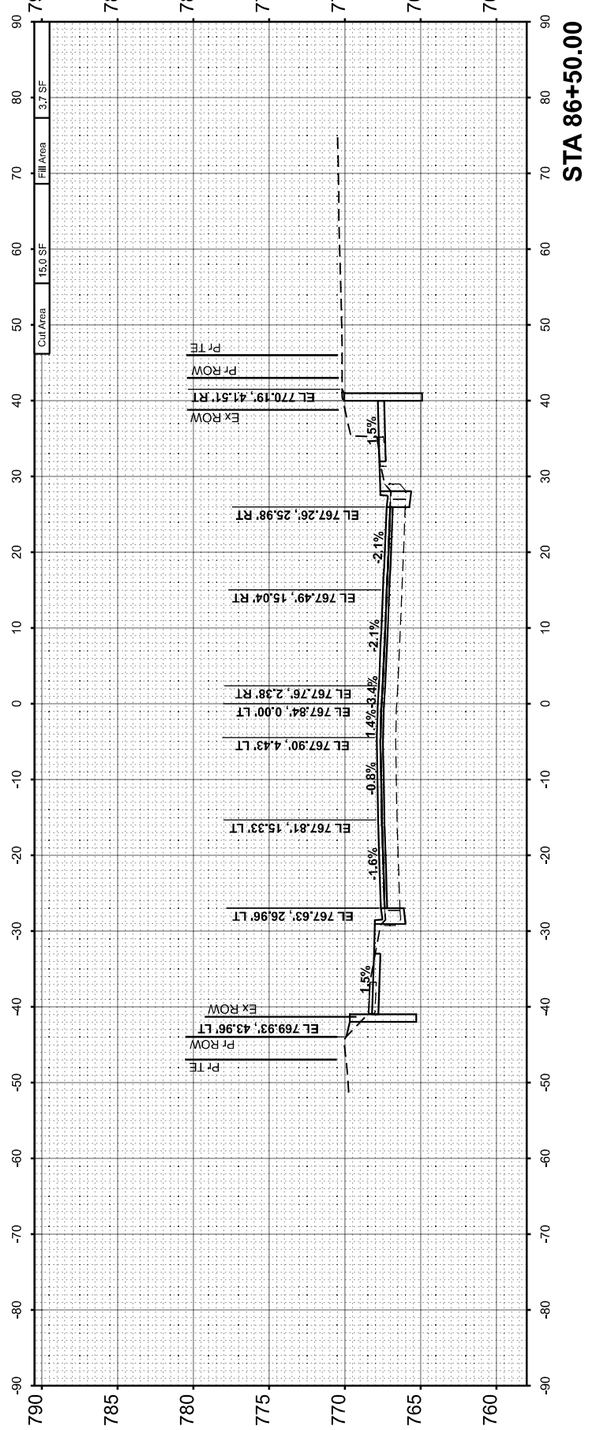

FINAL SURVEY		BY	DATE
NOTE BOOK	SURVEYED		
	PLOTTED		
	TEMPLATE		
	AREAS		
NO.	AREAS CHECKED		

ORIGINAL SURVEY		BY	DATE
NOTE BOOK	SURVEYED		
	PLOTTED		
	TEMPLATE		
	AREAS		
NO.	AREAS CHECKED		

MODEL: IL_9_1 - 86+50.00 R5 [Sheet]
FILE NAME: V:\4216 - IL 9 Bloomington\CADD\CADD Sheets\D570855-sht-xsc.dgn

Hutchison Engineering, Inc.

USER NAME = BDeCraene	DESIGNED -	REVISED -	
	DRAWN -	REVISED -	
PLOT SCALE = 0.16666633 ' / in.	CHECKED -	REVISED -	
PLOT DATE = 10/17/2023	DATE -	REVISED -	

STATE OF ILLINOIS
DEPARTMENT OF TRANSPORTATION

FAP 693 (IL RTE 9)
W MARKET ST CROSS SECTIONS

SCALE: H=10 V=5 | SHEET 24 OF 28 SHEETS | STA. 86+50.00 TO STA. 87+00.00

F.A.P. RTE.	SECTION	COUNTY	TOTAL SHEETS	SHEET NO.
693	(129,109)RS3(16,4.1)CS(10FR)RS	McLEAN	218	205

CONTRACT NO. 70855

ILLINOIS FED. AID PROJECT

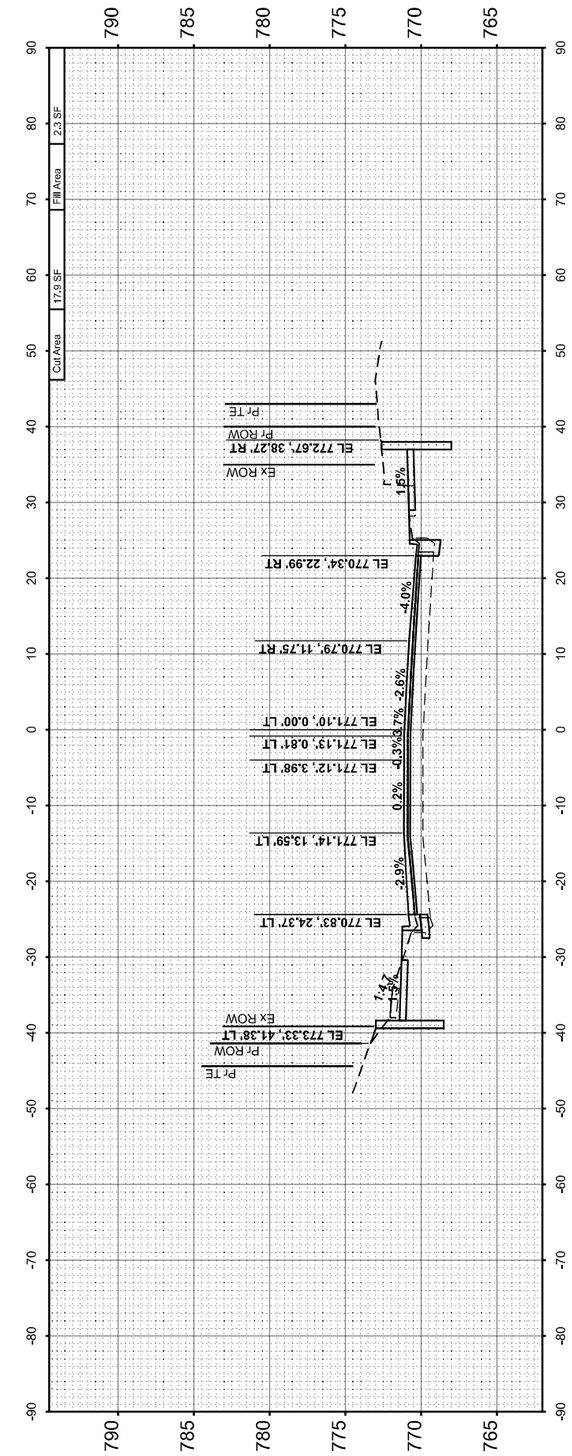

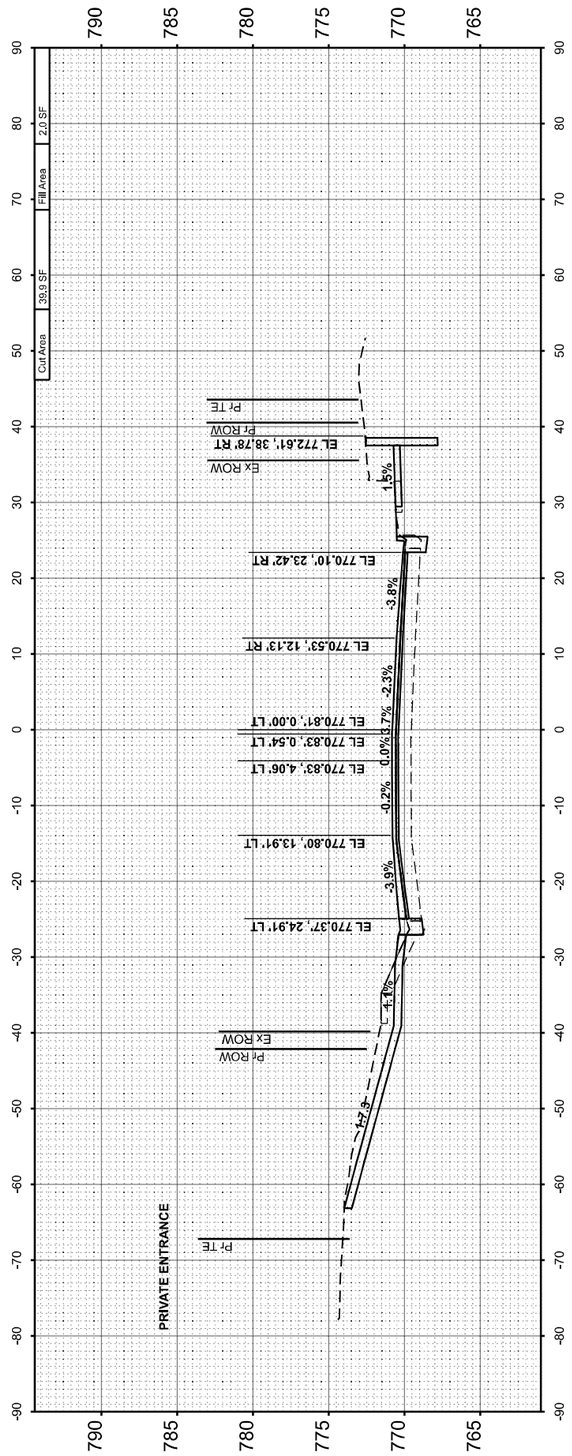

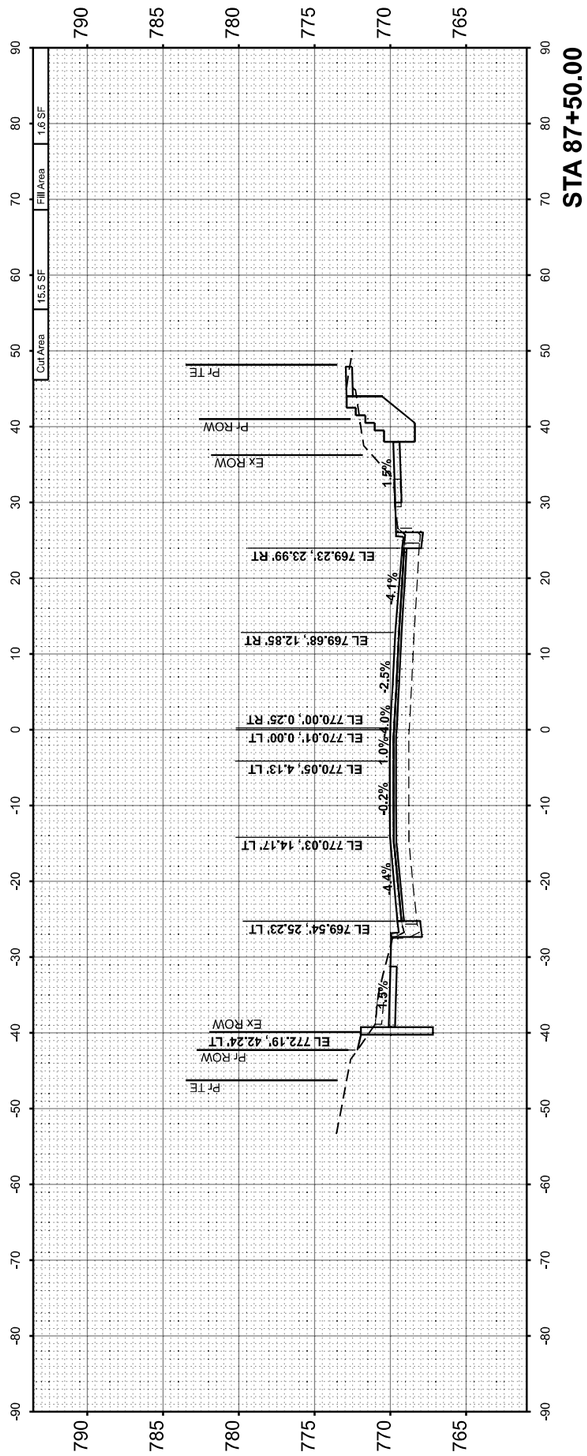

FINAL SURVEY	SURVEYED	BY	DATE
NOTE BOOK	PLOTTED		
NO.	TEMPLATE		
	AREAS		
	AREAS CHECKED		

ORIGINAL SURVEY	SURVEYED	BY	DATE
NOTE BOOK	PLOTTED		
NO.	TEMPLATE		
	AREAS		
	AREAS CHECKED		

MODEL: IL_9_+_87+60.00 R6 [Sheet]
FILE NAME: V:\4216 - IL 9 Bloomington\CADD\CADD Sheets\D570855sellsheet.dgn

Hutchison Engineering, Inc.

USER NAME = BDeCraene	DESIGNED -	REVISED -
	DRAWN -	REVISED -
PLOT SCALE = 0.16666633 ' / in.	CHECKED -	REVISED -
PLOT DATE = 10/17/2023	DATE -	REVISED -

STATE OF ILLINOIS
DEPARTMENT OF TRANSPORTATION

FAP 693 (IL RTE 9)
W MARKET ST CROSS SECTIONS

SCALE: H=10 V=5 | SHEET 25 OF 28 SHEETS | STA. 87+50.00 | TO STA. 88+00.00

F.A.P. RTE.	SECTION	COUNTY	TOTAL SHEETS	SHEET NO.
693	(129,109)RS3(16,4.1)CS(10FR)RS	McLEAN	218	206
		CONTRACT NO. 70855		
		ILLINOIS	FED. AID PROJECT	

FINAL SURVEY		BY	DATE
NOTE BOOK	SURVEYED		
NO.	PLOTTED		
	TEMPLATE		
	AREAS		
	AREAS CHECKED		

ORIGINAL SURVEY		BY	DATE
NOTE BOOK	SURVEYED		
NO.	PLOTTED		
	TEMPLATE		
	AREAS		
	AREAS CHECKED		

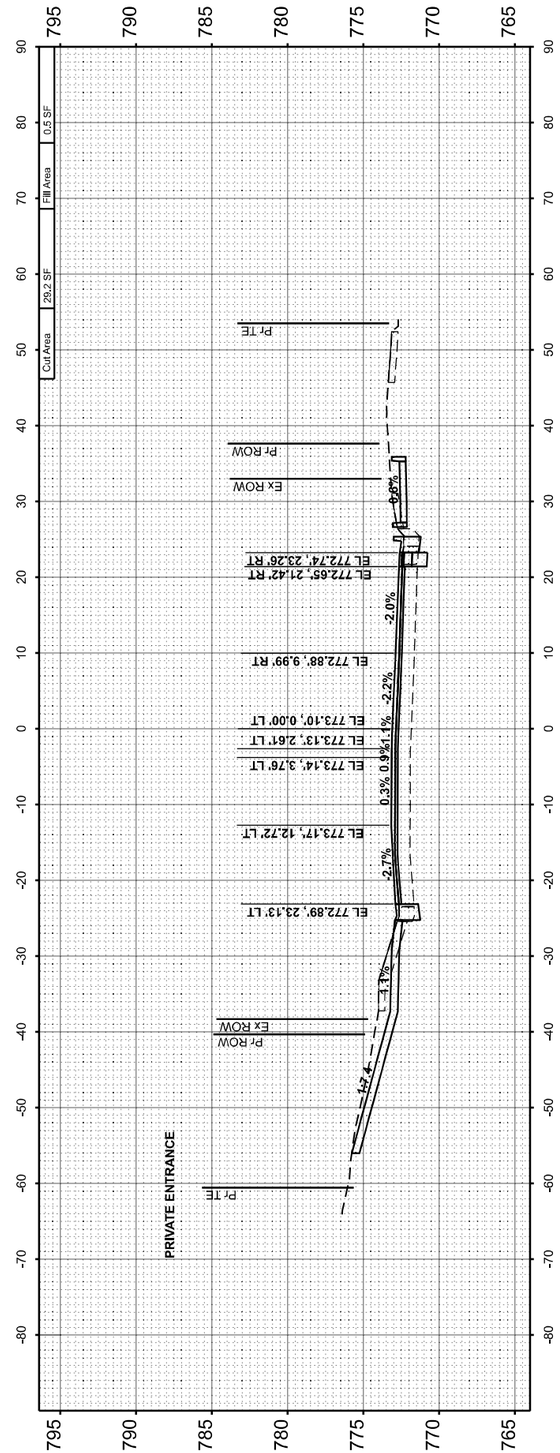

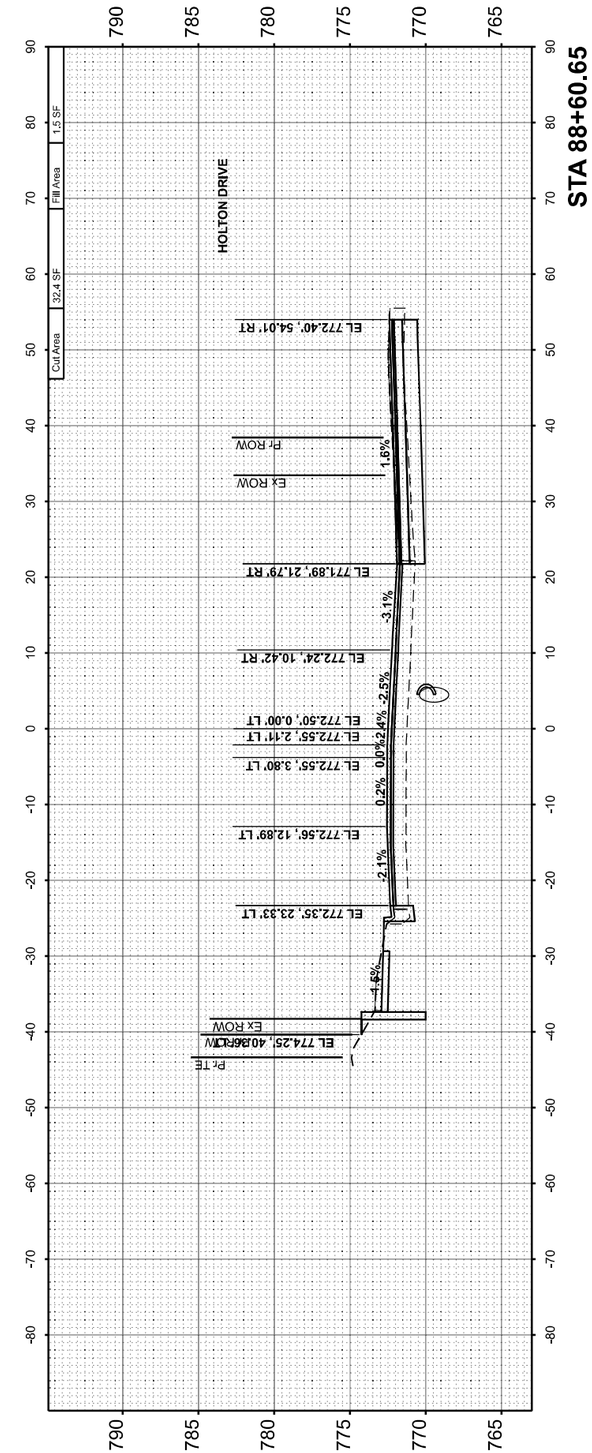

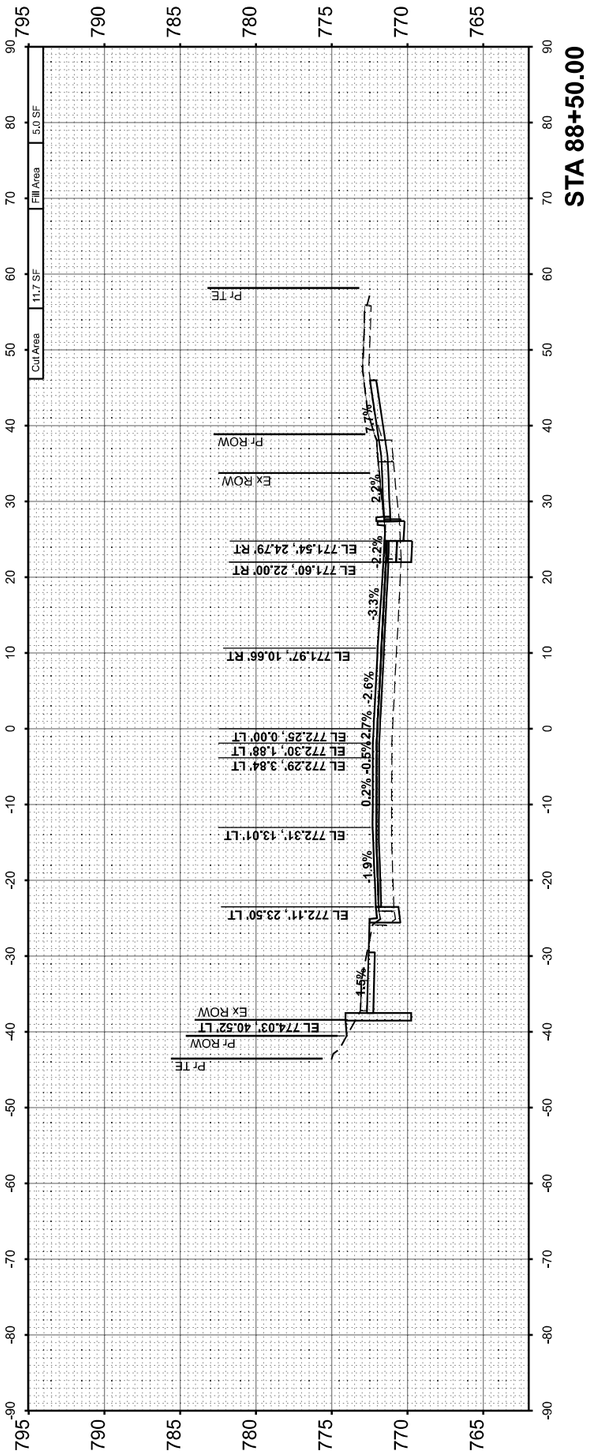

MODEL: IL_9_1 - 68+50.00 RS [Sheet]
FILE NAME: V:\4216 - IL 9 Bloomington\CADD\CADD Sheets\D570855-sht-xsc.dgn

Hutchison Engineering, Inc.	USER NAME = BDeCraene	DESIGNED -	REVISED -
		DRAWN -	REVISED -
	PLOT SCALE = 0.16666633 ' / In.	CHECKED -	REVISED -
	PLOT DATE = 10/17/2023	DATE -	REVISED -

STATE OF ILLINOIS
DEPARTMENT OF TRANSPORTATION

FAP 693 (IL RTE 9)
W MARKET ST CROSS SECTIONS

SCALE: H=10 V=5 | SHEET 26 OF 28 SHEETS | STA. 88+50.00 | TO STA. 88+86.72

F.A.P. RTE.	SECTION	COUNTY	TOTAL SHEETS	SHEET NO.
693	(129,109)RS3(16,4.1)CS(10FR)RS	McLEAN	218	207
		CONTRACT NO. 70855		
	ILLINOIS	FED. AID PROJECT		

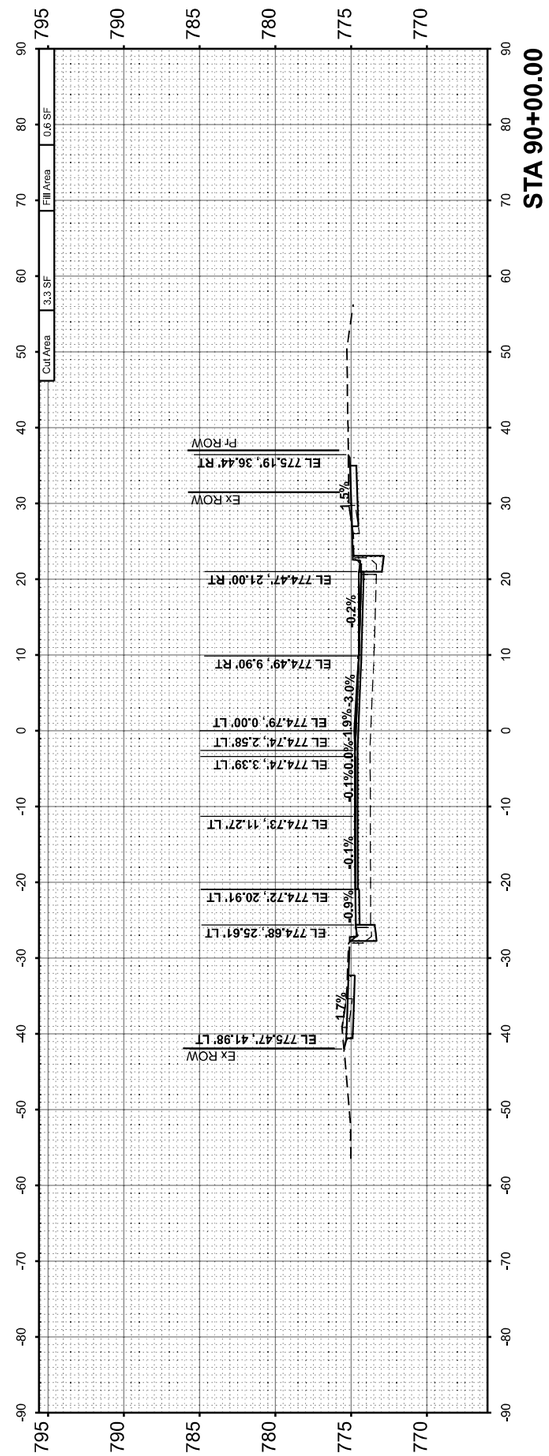

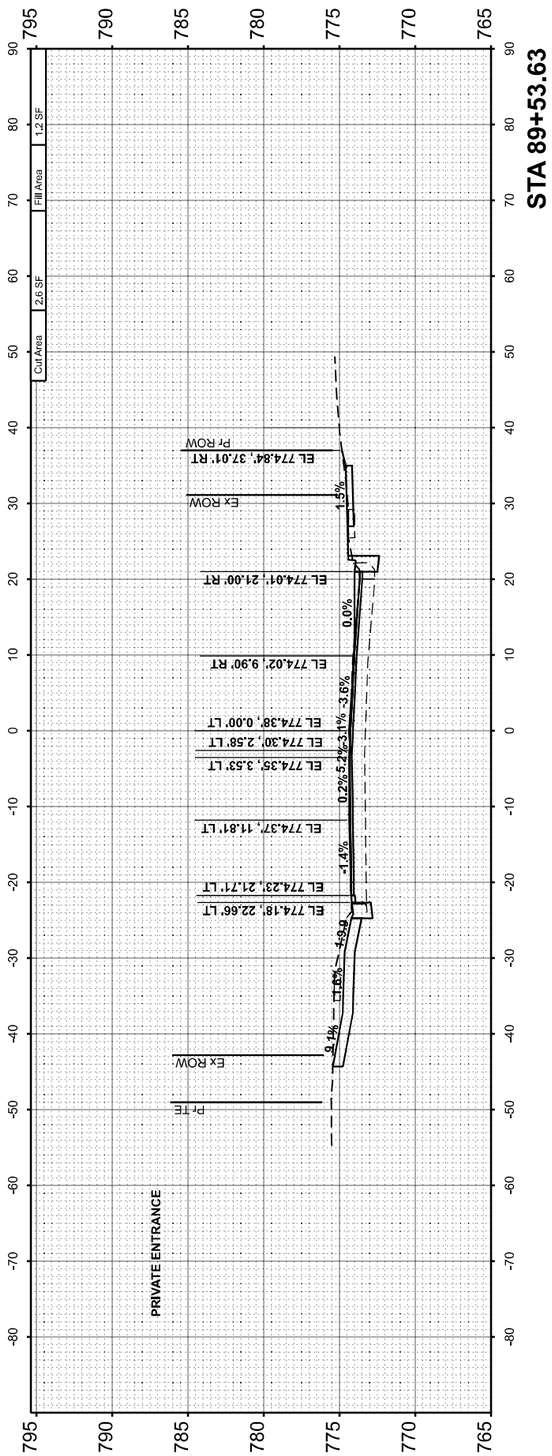

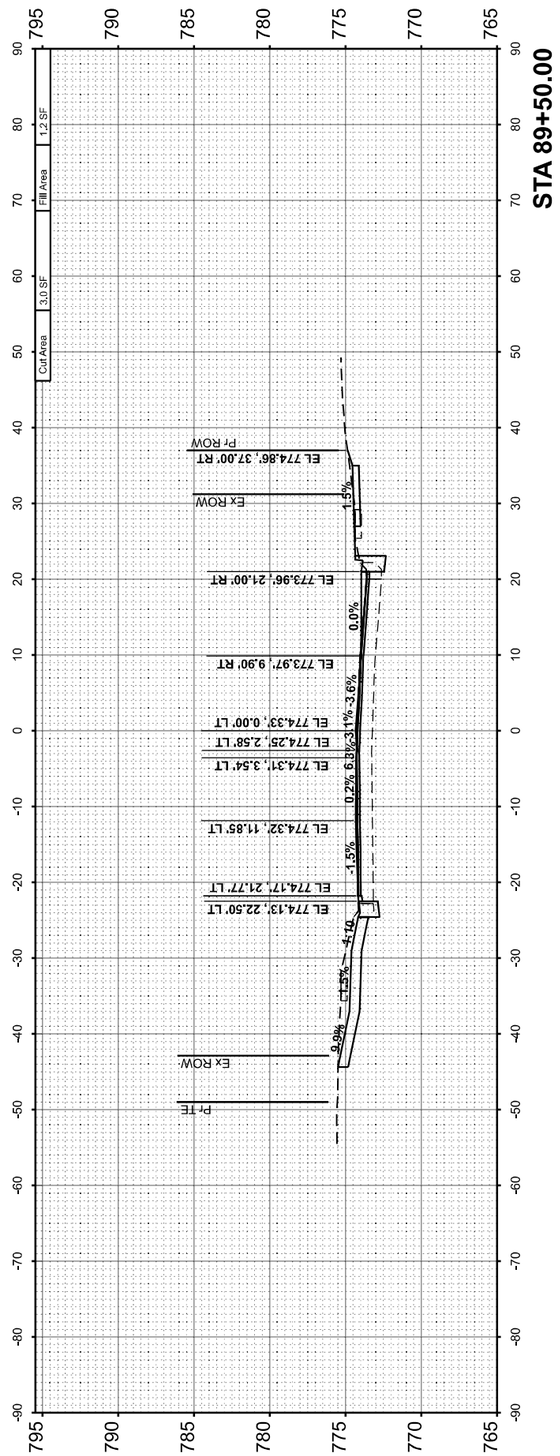

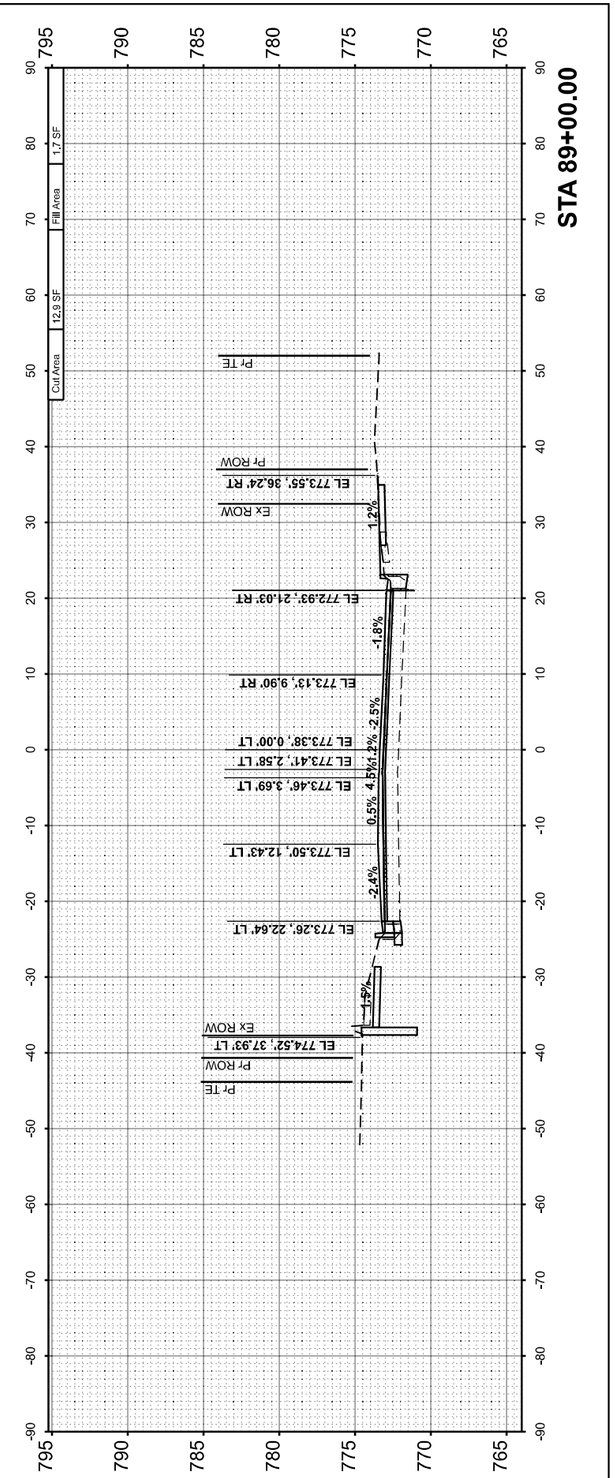

FINAL SURVEY		BY	DATE
NOTE BOOK	SURVEYED		
NO.	PLOTTED		
	TEMPLATE		
	AREAS		
	AREAS CHECKED		

ORIGINAL SURVEY		BY	DATE
NOTE BOOK	SURVEYED		
NO.	PLOTTED		
	TEMPLATE		
	AREAS		
	AREAS CHECKED		

MODEL: IL_9_1 - 89+00.00 RS [Sheet]
FILE NAME: V:\4216 - IL 9 Bloomington\CADD\CADD Sheets\D570855-sht-xsc.dgn

Hutchison Engineering, Inc.

USER NAME = BDeCraene	DESIGNED -	REVISED -	
	DRAWN -	REVISED -	
PLOT SCALE = 0.16666633 ' / in.	CHECKED -	REVISED -	
PLOT DATE = 10/17/2023	DATE -	REVISED -	

STATE OF ILLINOIS
DEPARTMENT OF TRANSPORTATION

FAP 693 (IL RTE 9)
W MARKET ST CROSS SECTIONS

SCALE: H=10 V=5 | SHEET 27 OF 28 SHEETS | STA. 89+00.00 TO STA. 90+00.00

F.A.P. RTE.	SECTION	COUNTY	TOTAL SHEETS	SHEET NO.
693	(129,109)RS3(16,4.1)CS(10FR)RS	McLEAN	218	208

CONTRACT NO. 70855

ILLINOIS | FED. AID PROJECT

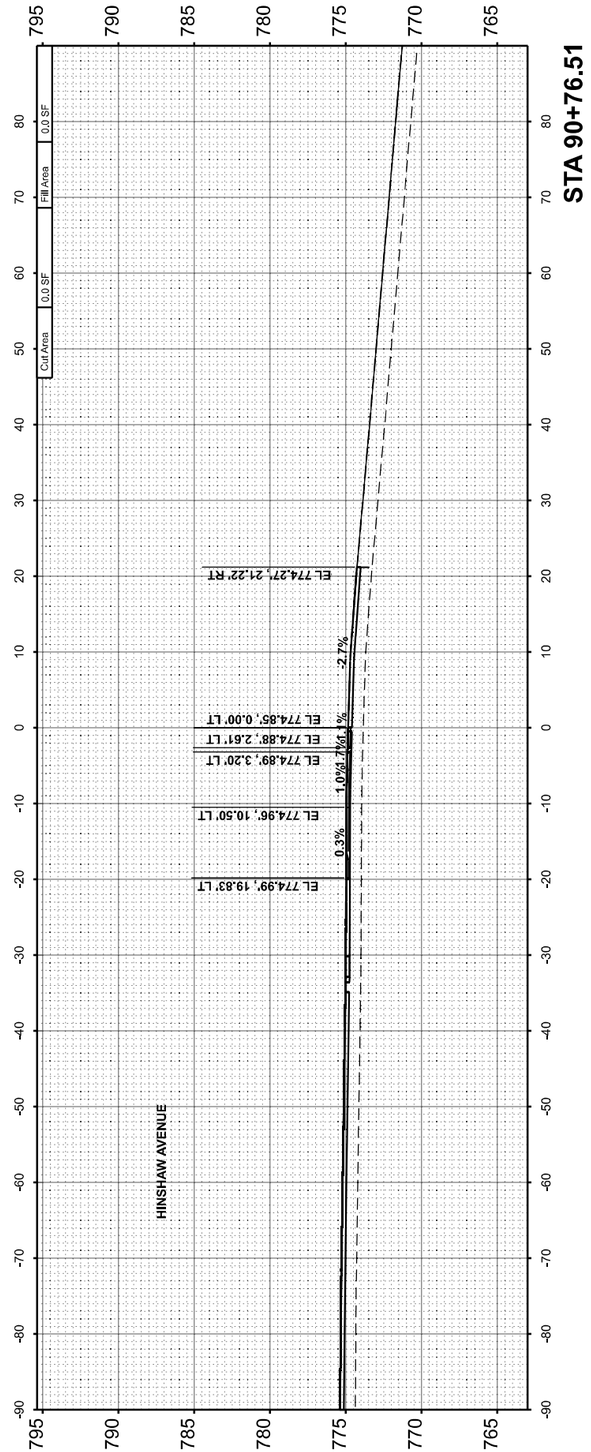

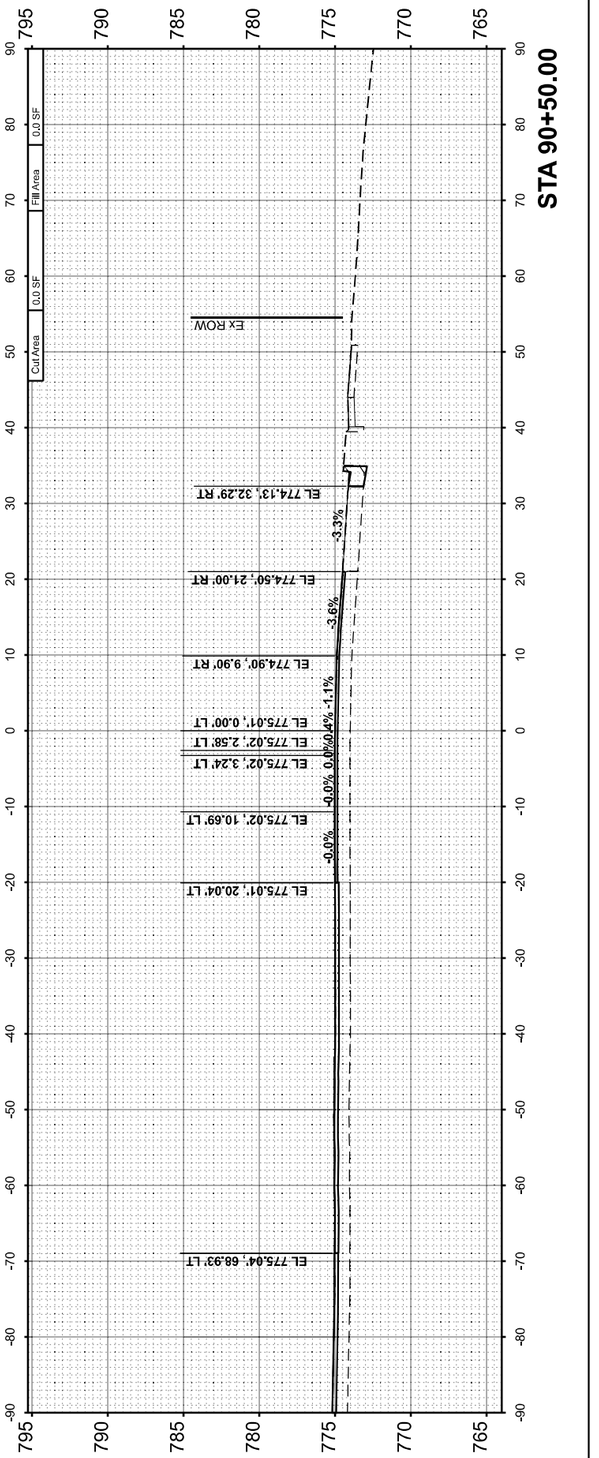

ORIGINAL SURVEY		BY	DATE
	SURVEYED		
	PLOTTED		
NOTE BOOK	TEMPLATE		
	AREAS		
NO.	AREAS CHECKED		

FINAL SURVEY		BY	DATE
	SURVEYED		
	PLOTTED		
NOTE BOOK	TEMPLATE		
	AREAS		
NO.	AREAS CHECKED		

MODEL: IL_9_1_-90+50.00 RS [Sheet]
FILE NAME: V:\4218 - IL 9 Bloomington\CADD\CADD Sheets\D5705855-alin-xsc.dgn

Hutchison Engineering, Inc.

USER NAME = BDeCraene	DESIGNED -	REVISED -
	DRAWN -	REVISED -
PLOT SCALE = 0.16666633 ' / in.	CHECKED -	REVISED -
PLOT DATE = 10/17/2023	DATE -	REVISED -

STATE OF ILLINOIS
DEPARTMENT OF TRANSPORTATION

FAP 693 (IL RTE 9)
W MARKET ST CROSS SECTIONS

SCALE: H=10 V=5 | SHEET 28 OF 28 SHEETS | STA. 90+50.00 | TO STA. 90+76.51

F.A.P. RTE.	SECTION	COUNTY	TOTAL SHEETS	SHEET NO.
693	(129,109)RS3(16,4.1)CS(10FR)RS	McLEAN	218	209
		CONTRACT NO. 70855		
	ILLINOIS	FED. AID PROJECT		

ORIGINAL SURVEY		BY	DATE
NOTE BOOK	SURVEYED		
	PLOTTED		
	TEMPLATE		
	AREAS		
NO.	AREAS CHECKED		

FINAL SURVEY		BY	DATE
NOTE BOOK	SURVEYED		
	PLOTTED		
	TEMPLATE		
	AREAS		
NO.	AREAS CHECKED		

MODEL: WHITE_OAK - 200+00.00 [Sheet]
FILE NAME: V:\4216 - IL 9 Bloomington\CADD\CADD Sheets\D570855-sht-xso-sideroads.dgn

Hutchison Engineering, Inc.

USER NAME = BDeCraene
PLOT SCALE = 0.16666633 ' / in.
PLOT DATE = 10/17/2023

DESIGNED -
DRAWN -
CHECKED -
DATE -

REVISED -
REVISED -
REVISED -
REVISED -

STATE OF ILLINOIS
DEPARTMENT OF TRANSPORTATION

SCALE: H=10 V=5

FAP 693 (IL RTE 9)
WHITE OAK RD CROSS SECTIONS

SHEET 1 OF 5 SHEETS STA. 200+00.00 TO STA. 201+00.00

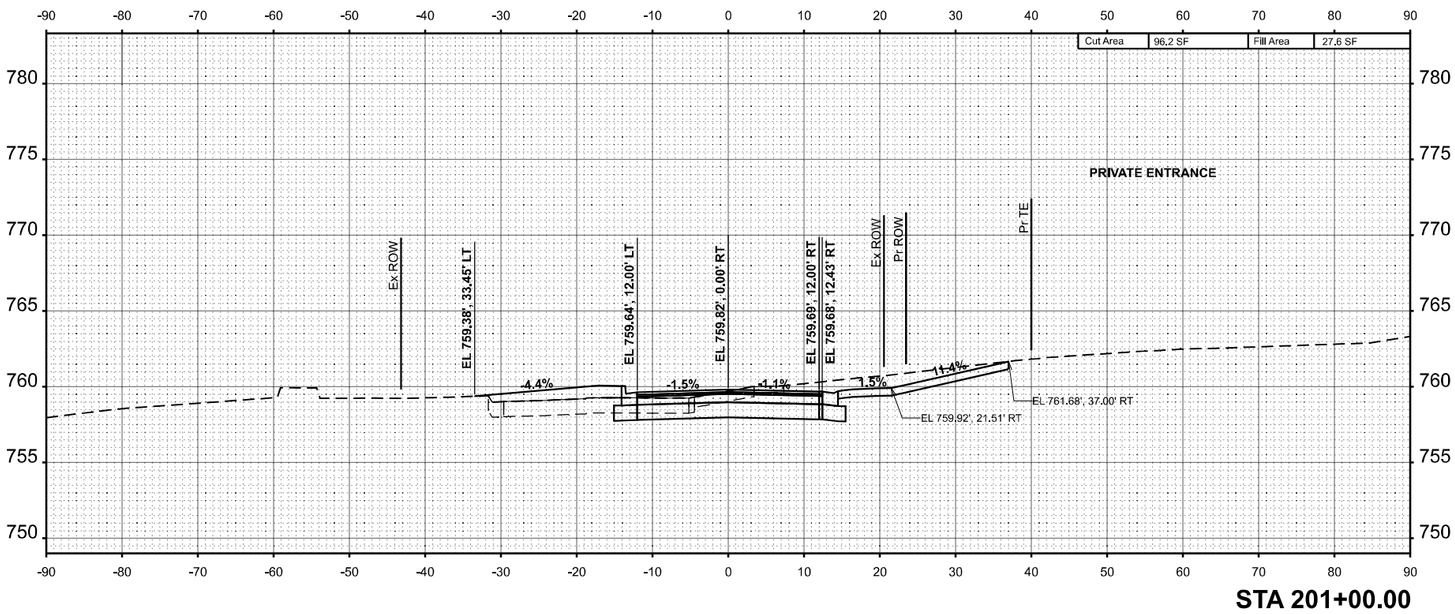

STA 201+00.00

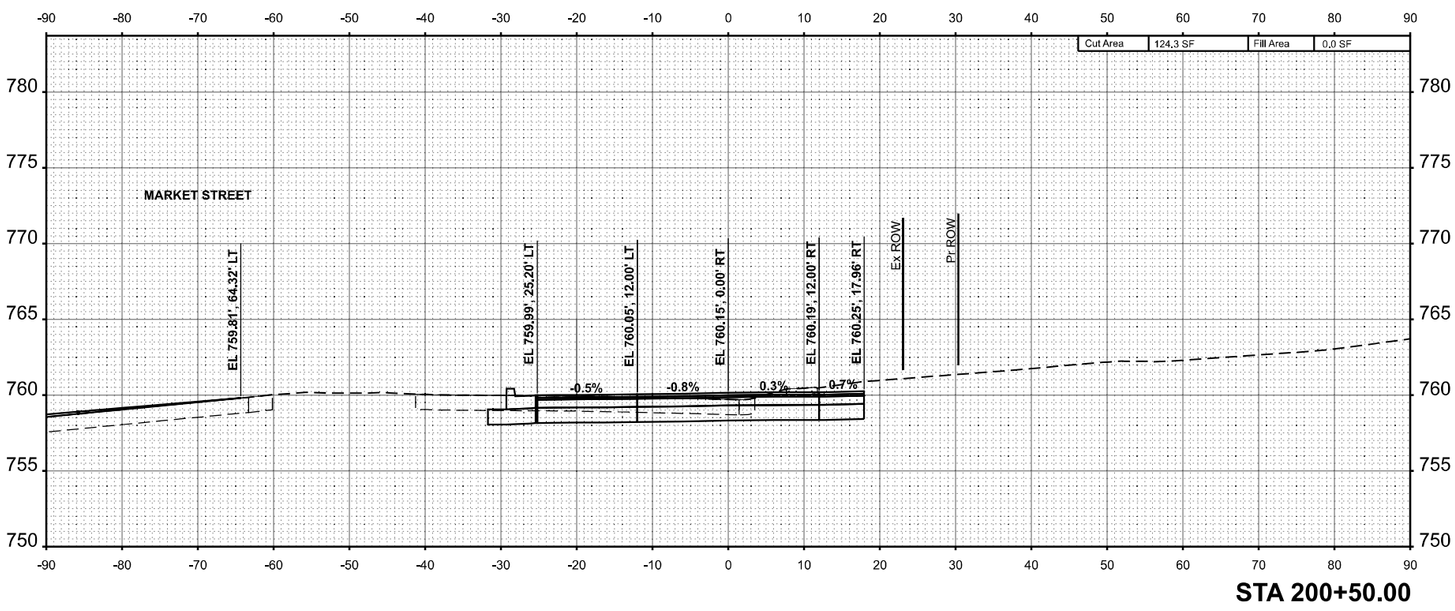

STA 200+50.00

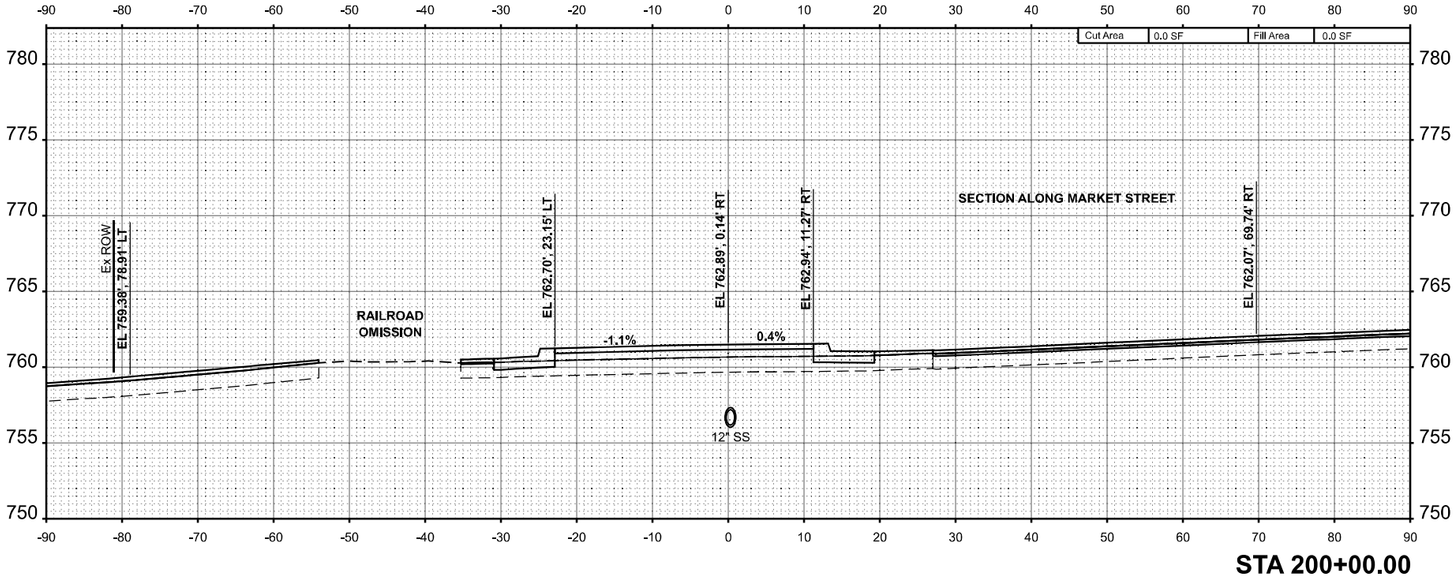

STA 200+00.00

F.A.P. RTE.	SECTION	COUNTY	TOTAL SHEETS	SHEET NO.
693	(129,109)RS3(16.4.1)CS(10FR)RS	McLEAN	218	210

CONTRACT NO. 70855

ILLINOIS FED. AID PROJECT

STA 201+50.00

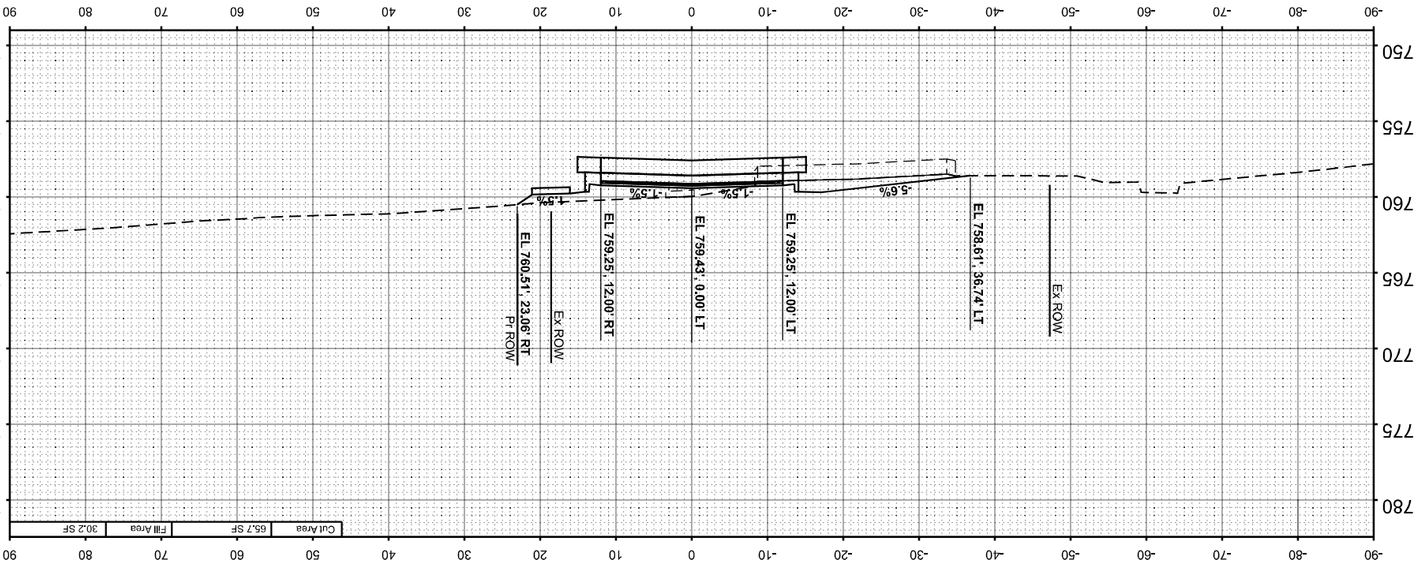

STA 202+00.00

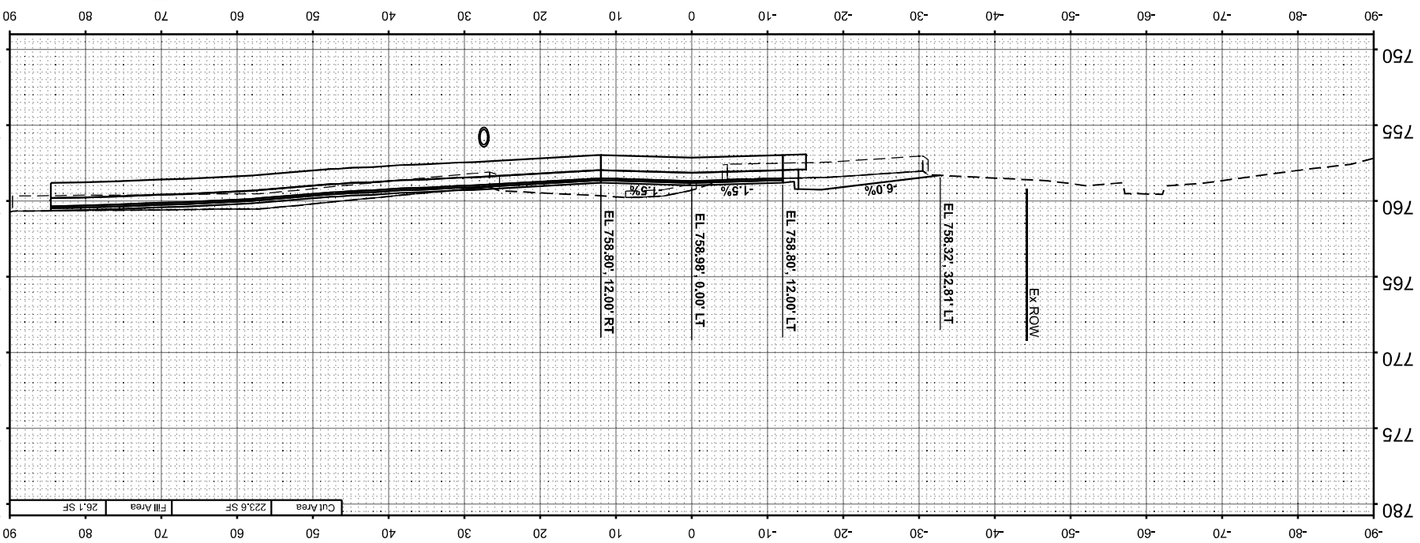

STA 202+26.35

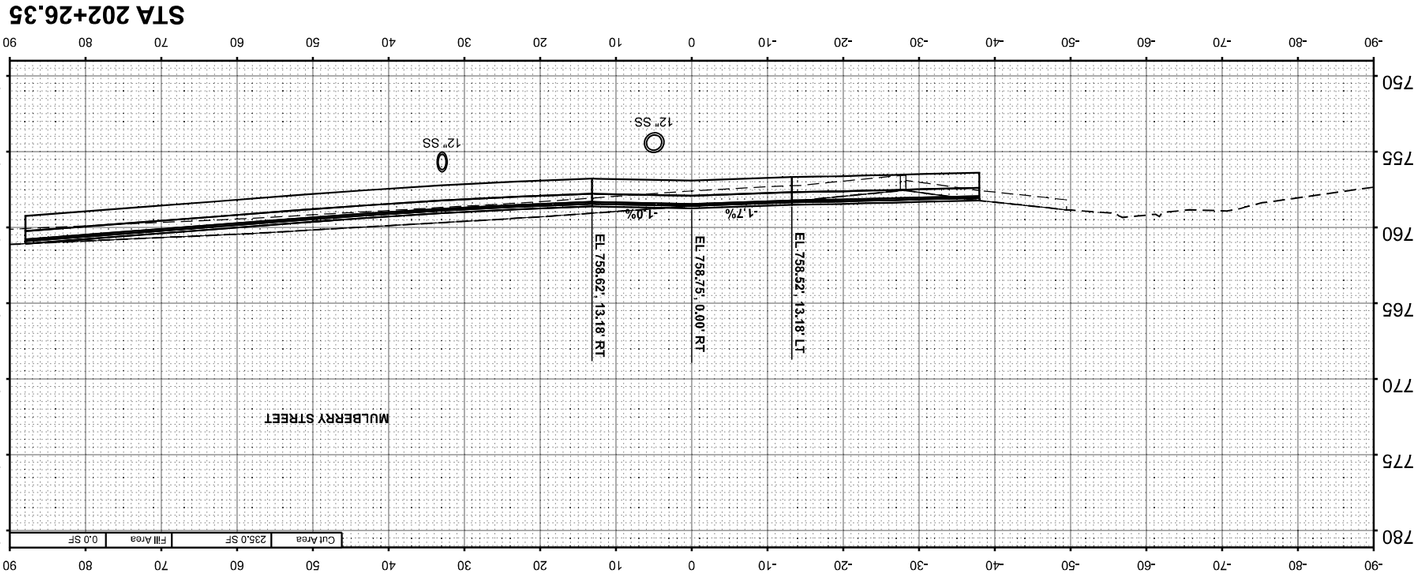

ORIGINAL SURVEY			
NOTE BOOK			
SURVEYED			
PLOTTED			
TEMPLATE			
AREAS			
AREAS CHECKED			
NO.		BY	DATE

FINAL SURVEY			
NOTE BOOK			
SURVEYED			
PLOTTED			
TEMPLATE			
AREAS			
AREAS CHECKED		BY	DATE

F.A.P. RTE.	SECTION	COUNTY	TOTAL SHEETS	SHEET NO.
693	(129,109)RS3(16.4,1)CS(10FR)RS	McLEAN	218	211
		CONTRACT NO. 70855		
	ILLINOIS	FED. AID PROJECT		

FAP 693 (IL RTE 9)
WHITE OAK RD CROSS SECTIONS

SCALE: H=10 V=5 | SHEET 2 OF 5 SHEETS | STA. 201+50.00 | TO STA. 202+26.35

STATE OF ILLINOIS
DEPARTMENT OF TRANSPORTATION

DESIGNED	-	REVISED	-
DRAWN	-	REVISED	-
CHECKED	-	REVISED	-
DATE	-	REVISED	-

Hutchison Engineering, Inc.

USER NAME = BDeCraene
PLOT SCALE = 0.1666833 ' / In.
PLOT DATE = 10/17/2023

MODEL: WHITE_OAK - 201+50.00 [Sheet]
FILE NAME: V:\4216 - IL 9 Bloomington\CADD\CADD Sheets\D5705854-sht-xsec-sidebrowards.dgn

FINAL SURVEY		BY	DATE
NOTE BOOK	SURVEYED		
	PLOTTED		
	TEMPLATE		
	AREAS		
NO.	AREAS CHECKED		

ORIGINAL SURVEY		BY	DATE
NOTE BOOK	SURVEYED		
	PLOTTED		
	TEMPLATE		
	AREAS		
NO.	AREAS CHECKED		

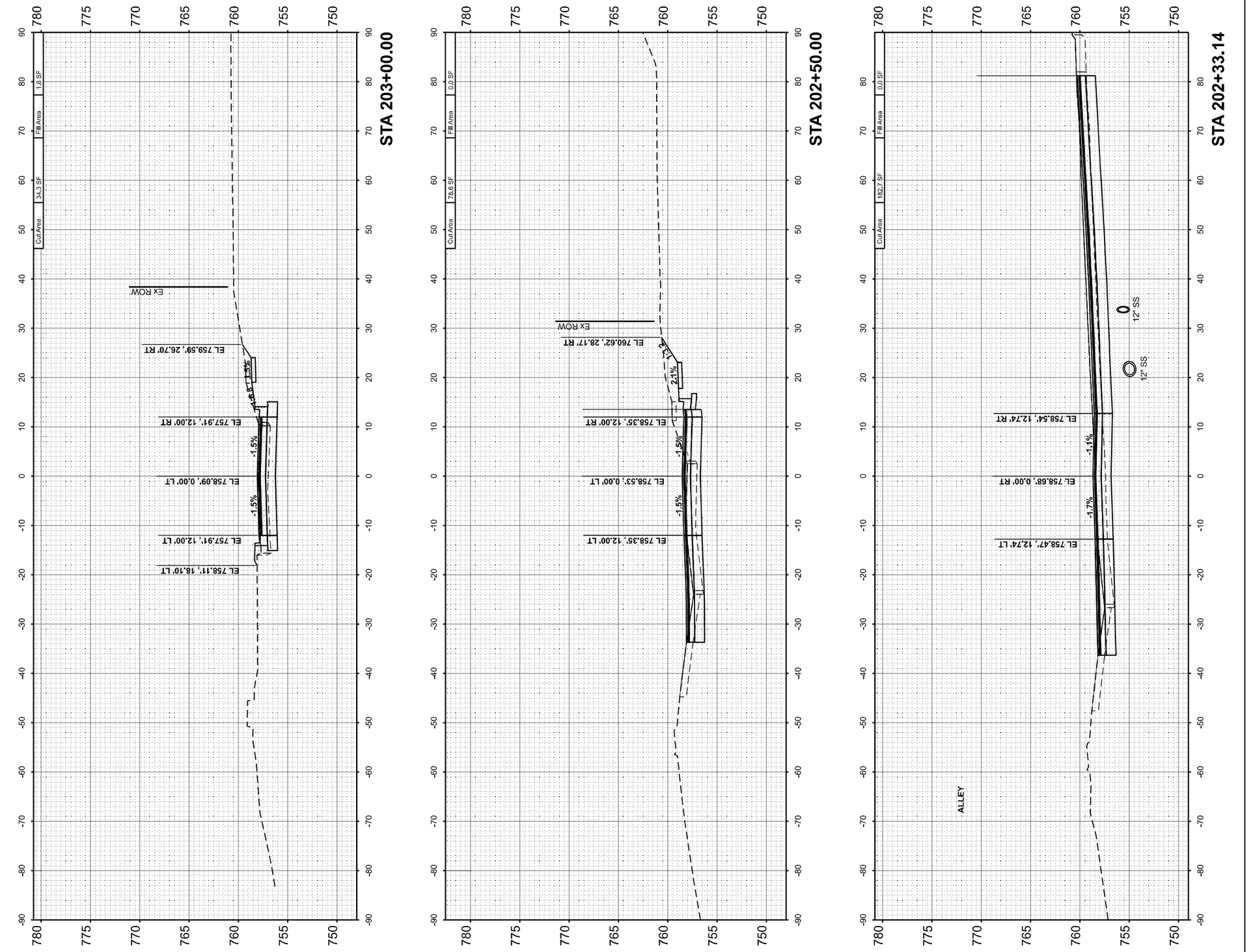

MODEL: WHITE_OAK - 202+33.14 [Sheet]
FILE NAME: V:\4216 - IL 9 Bloomington\CADD\CADD Sheets\D570855-sht-xsc-sidecards.dgn

Hutchison Engineering, Inc.	USER NAME = BDeCraene	DESIGNED -	REVISED -	STATE OF ILLINOIS DEPARTMENT OF TRANSPORTATION	FAP 693 (IL RTE 9) WHITE OAK RD CROSS SECTIONS	F.A.P. RTE.	SECTION	COUNTY	TOTAL SHEETS	SHEET NO.
		DRAWN -	REVISED -			693	(129,109)RS3(16,4.1)CS(10FR)RS	McLEAN	218	212
	PLOT SCALE = 0.16666633 ' / in.	CHECKED -	REVISED -					CONTRACT NO. 70855		
	PLOT DATE = 10/17/2023	DATE -	REVISED -		SCALE: H=10 V=5 SHEET 3 OF 5 SHEETS STA. 202+33.14 TO STA. 203+00.00			ILLINOIS FED. AID PROJECT		

FINAL SURVEY		BY	DATE
NOTE BOOK	SURVEYED		
NO.	PLOTTED		
	TEMPLATE		
	AREAS		
	AREAS CHECKED		

ORIGINAL SURVEY		BY	DATE
NOTE BOOK	SURVEYED		
NO.	PLOTTED		
	TEMPLATE		
	AREAS		
	AREAS CHECKED		

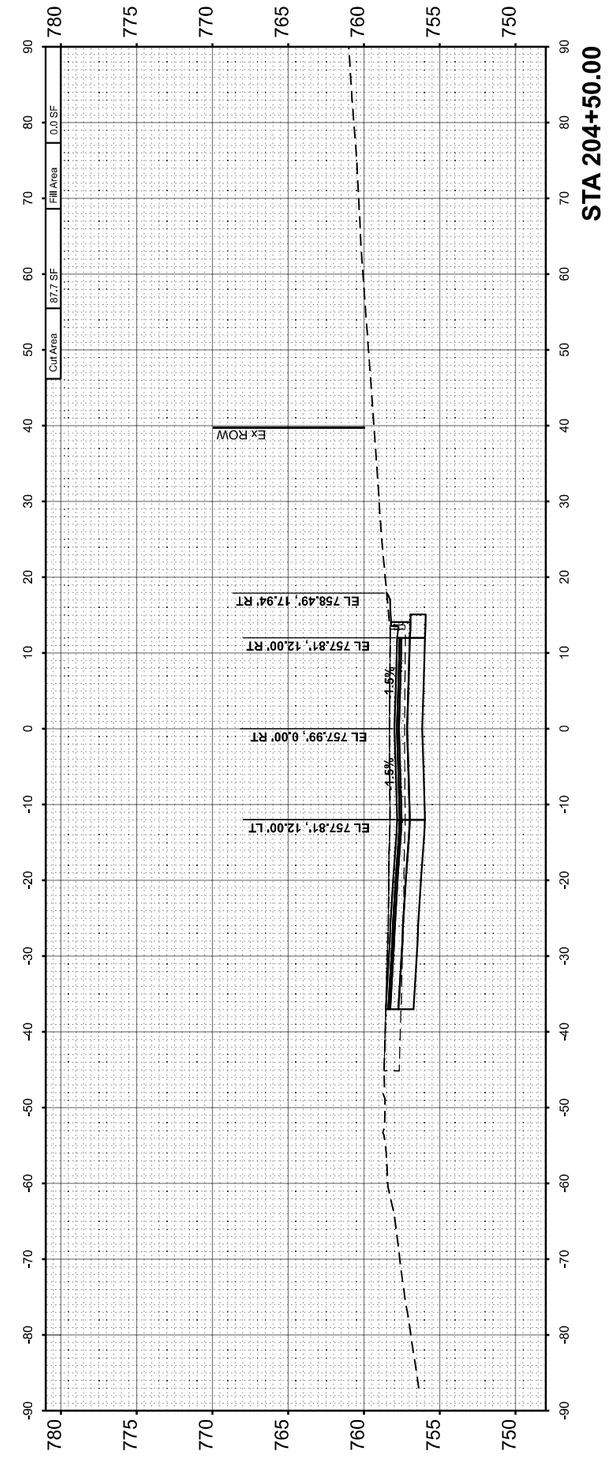

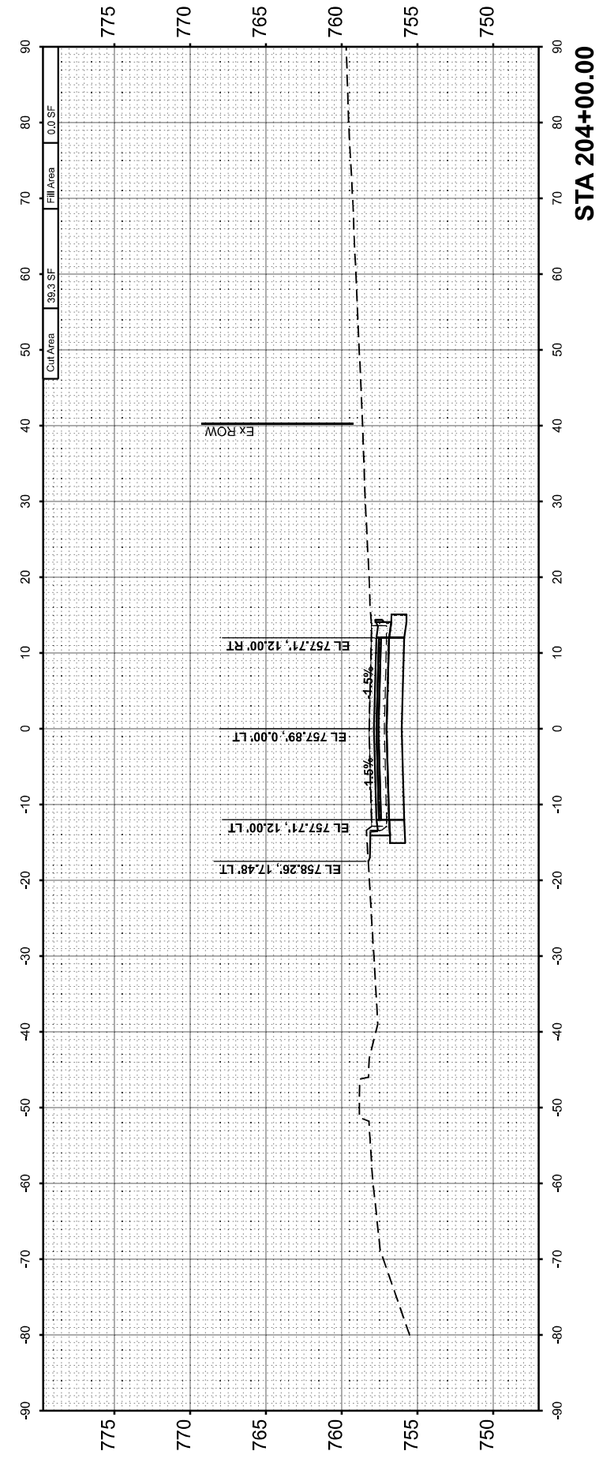

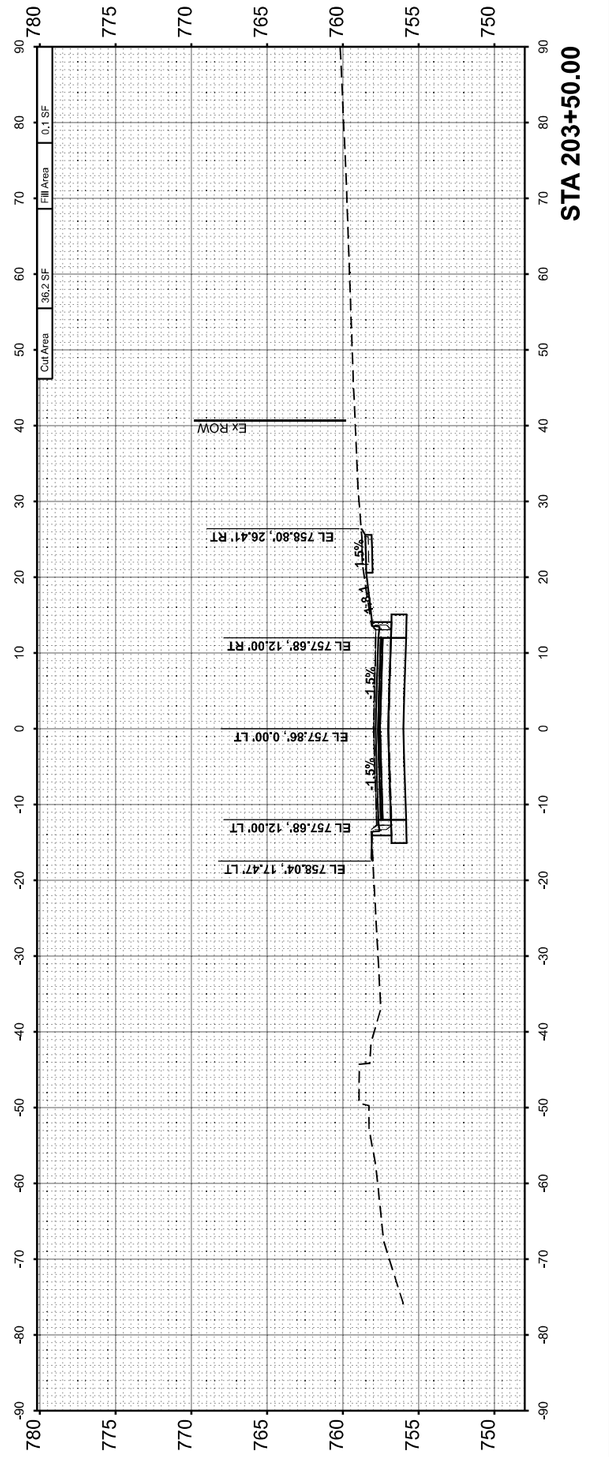

MODEL: WHITE_OAK - 203+50.00 [Sheet]
FILE NAME: V:\d2\18 - IL 9 Bloomington\CADD\CADD Sheets\D570855\dlabs\oldtarcrossfix.dgn

Hutchison Engineering, Inc.	USER NAME = BDeCraene	DESIGNED -	REVISED -
		DRAWN -	REVISED -
	PLOT SCALE = 0.16666633 ' / In.	CHECKED -	REVISED -
	PLOT DATE = 10/17/2023	DATE -	REVISED -

STATE OF ILLINOIS
DEPARTMENT OF TRANSPORTATION

FAP 693 (IL RTE 9)
WHITE OAK RD CROSS SECTIONS

SCALE: H=10 V=5 | SHEET 4 OF 5 SHEETS | STA. 203+50.00 TO STA. 204+50.00

F.A.P. RTE.	SECTION	COUNTY	TOTAL SHEETS	SHEET NO.
693	(129,109)RS3(16,4.1)CS(10FR)RS	McLEAN	218	213
		CONTRACT NO. 70855		
	ILLINOIS	FED. AID PROJECT		

FINAL SURVEY		BY	DATE
	SURVEYED		
	PLOTTED		
NOTE BOOK	TEMPLATE		
	AREAS		
NO.	AREAS CHECKED		

ORIGINAL SURVEY		BY	DATE
	SURVEYED		
	PLOTTED		
NOTE BOOK	TEMPLATE		
	AREAS		
NO.	AREAS CHECKED		

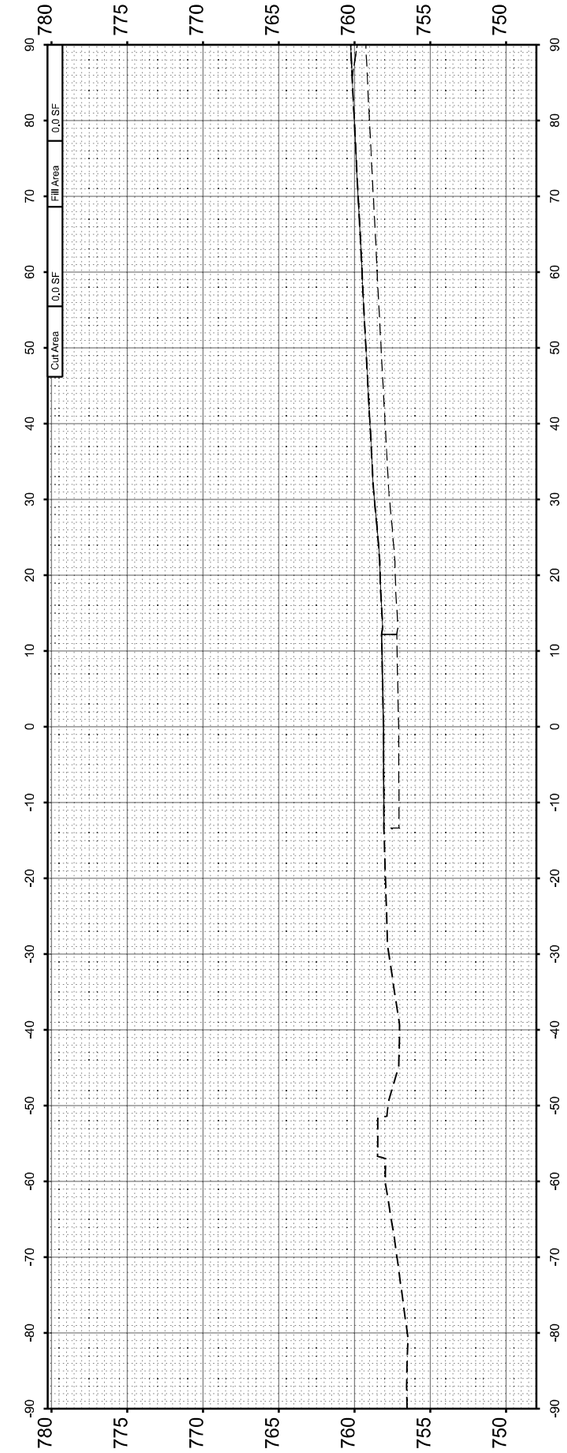

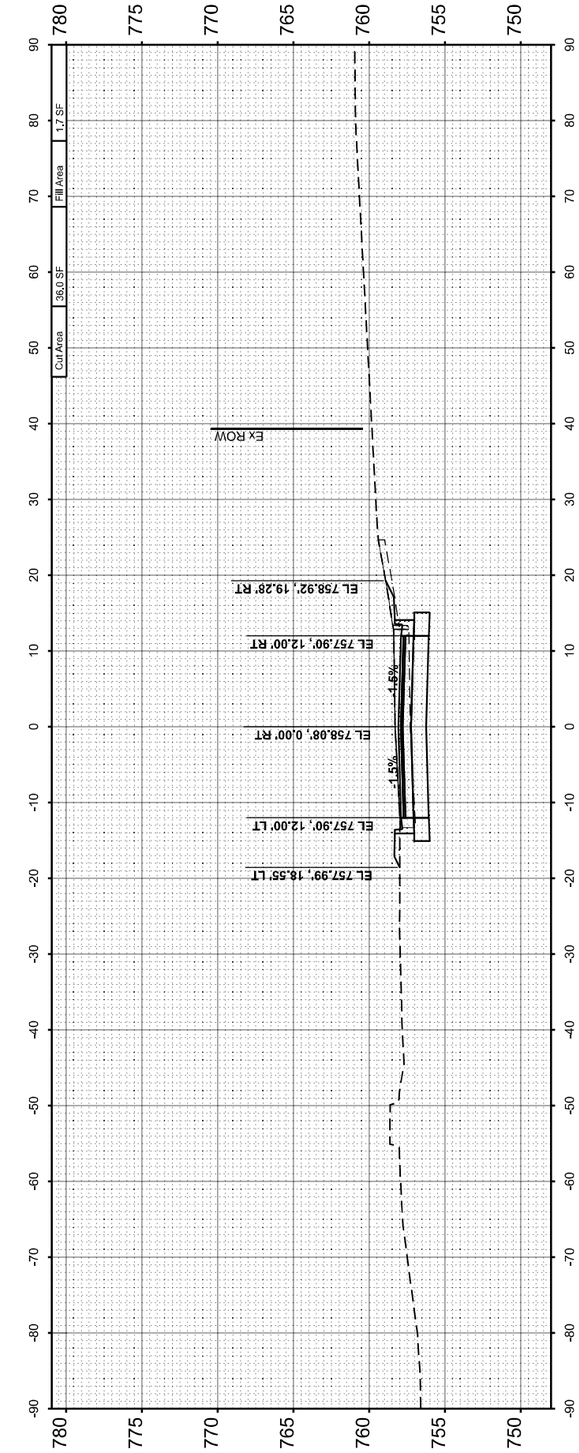

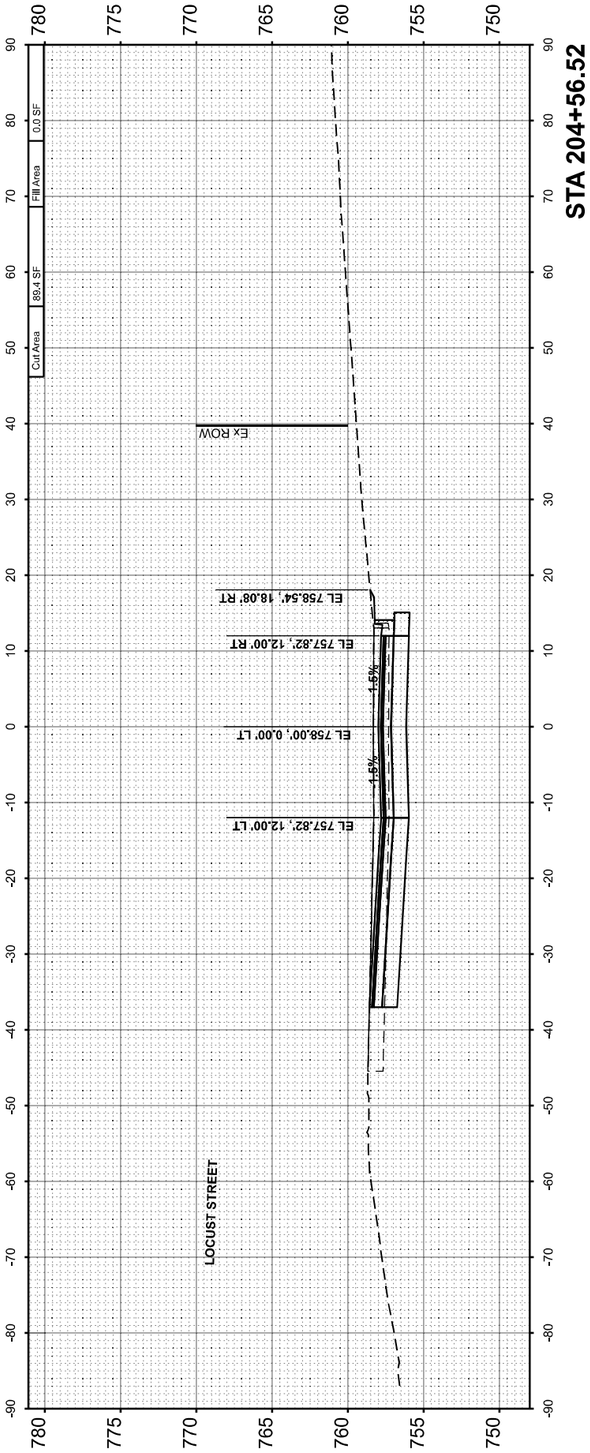

MODEL: WHITE_OAK - 204+56.52 [Sheet]
FILE NAME: V:\21\6 - IL 9 Bloomington\CADD\CADD Sheets\D270855elliewoodlarcadfx.dgn

Hutchison Engineering, Inc.	USER NAME = BDaCraene	DESIGNED -	REVISED -
		DRAWN -	REVISED -
	PLOT SCALE = 0.16666633 ' / In.	CHECKED -	REVISED -
	PLOT DATE = 10/17/2023	DATE -	REVISED -

STATE OF ILLINOIS
DEPARTMENT OF TRANSPORTATION

FAP 693 (IL RTE 9)
WHITE OAK RD CROSS SECTIONS

SCALE: H=10 V=5 | SHEET 5 OF 5 SHEETS | STA. 204+56.52 | TO STA. 205+50.00

F.A.P. RTE.	SECTION	COUNTY	TOTAL SHEETS	SHEET NO.
693	(129,109)RS3(16,4.1)CS(10FR)RS	McLEAN	218	214
		CONTRACT NO. 70855		
	ILLINOIS	FED. AID PROJECT		

STA 0+00.00

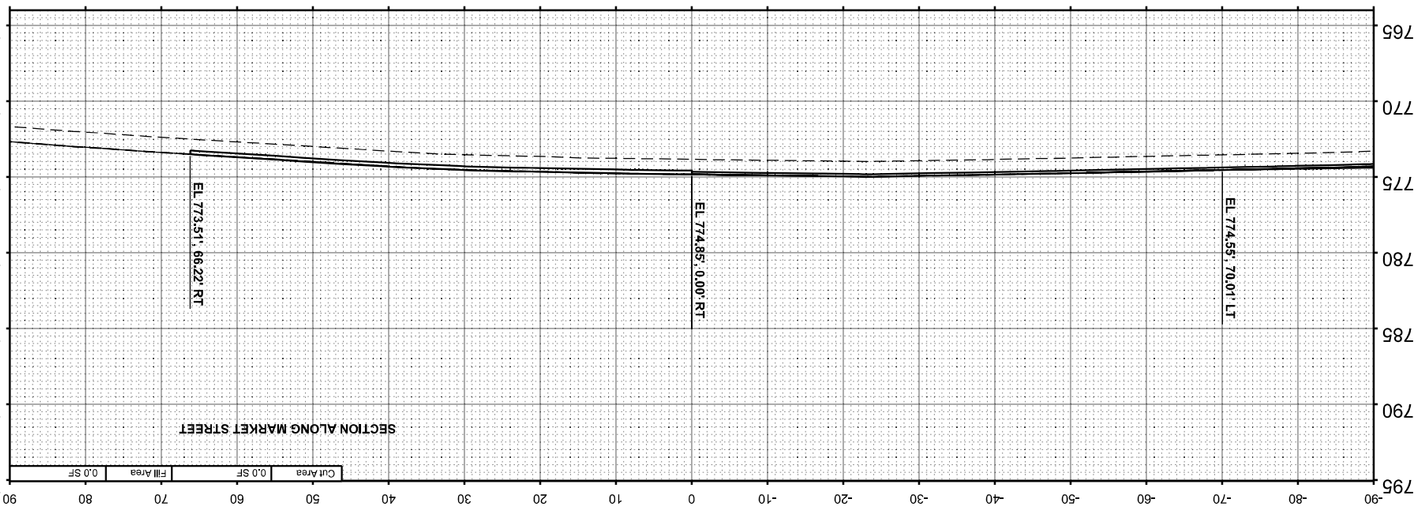

STA 0+50.00

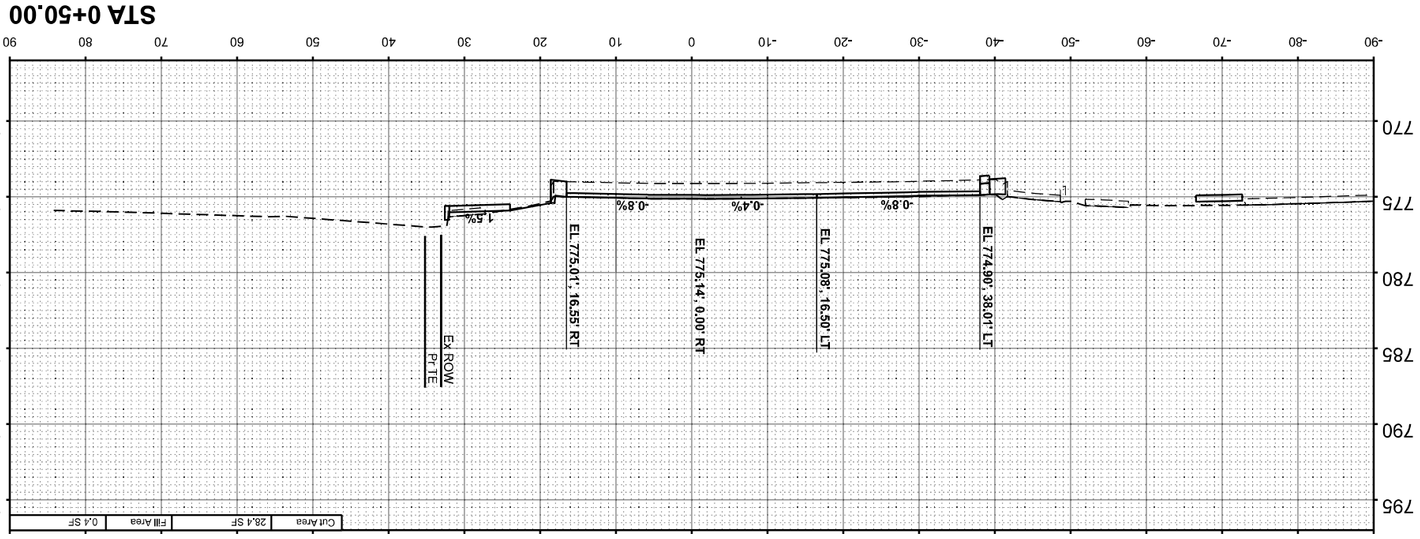

STA 0+77.35

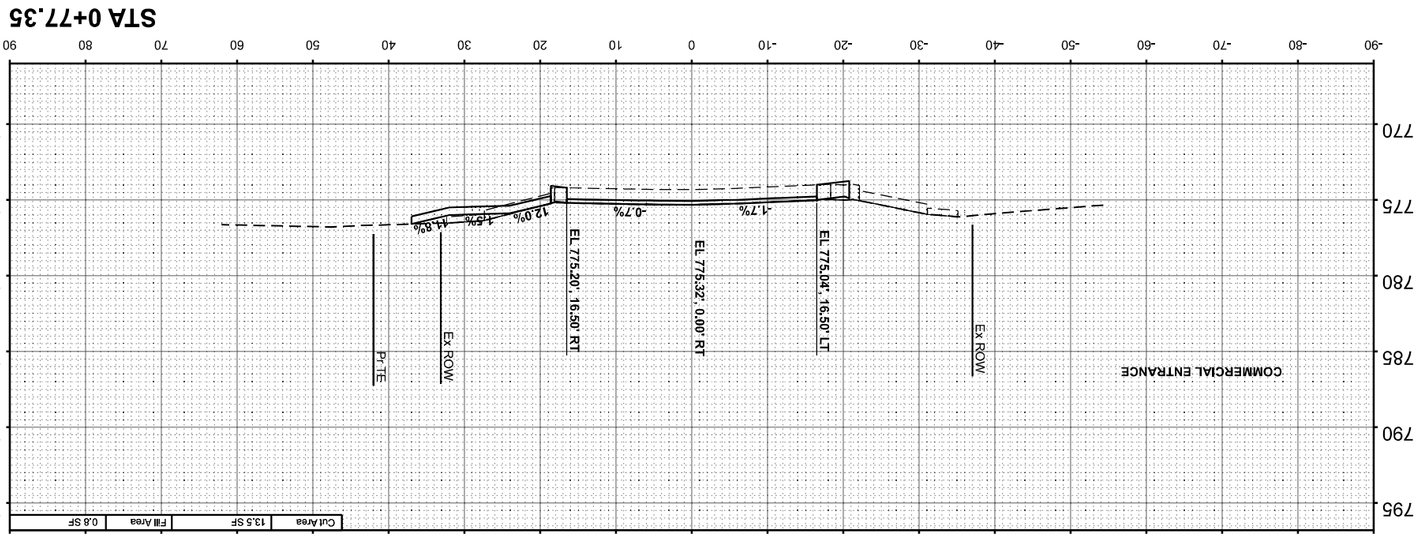

STA 0+80.70

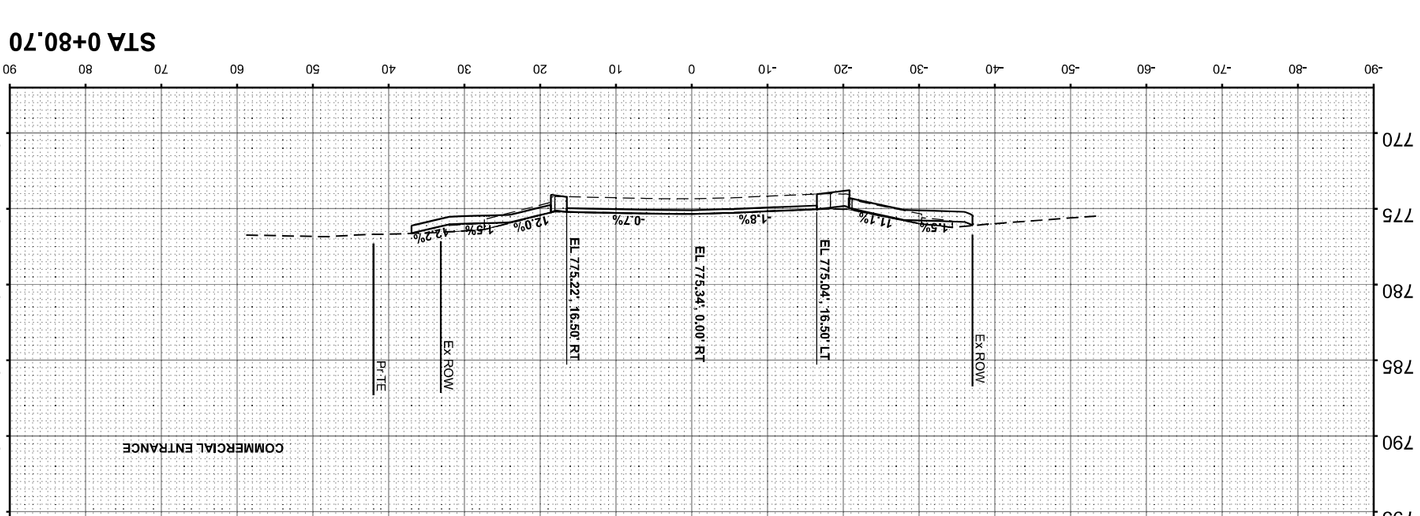

F.A.P. RTE.	SECTION	COUNTY	TOTAL SHEETS	SHEET NO.
693	(129,109)RS3(16.4,1)CS(10FR)RS	McLEAN	218	215
		CONTRACT NO. 70855		
	ILLINOIS	FED. AID PROJECT		

FAP 693 (IL RTE 9)
N HINSHAWAVE CROSS SECTIONS

SCALE: H=10 V=5 | SHEET 1 OF 4 SHEETS | STA. 0+00.00 | TO STA. 0+80.70

STATE OF ILLINOIS
DEPARTMENT OF TRANSPORTATION

DESIGNED	-
DRAWN	-
CHECKED	-
DATE	-

REVISED	-
REVISED	-
REVISED	-
REVISED	-

Hutchison Engineering, Inc.

USER NAME = BDoCrowne
PLOT SCALE = 0.1666833 ' / In.
PLOT DATE = 10/17/2023

ORIGINAL			
SURVEY NO.		BY	DATE
SURVEYED			
PLOTTED			
TEMPLATE			
AREAS			
AREAS CHECKED			

FINAL			
SURVEY NO.		BY	DATE
SURVEYED			
PLOTTED			
TEMPLATE			
AREAS			
AREAS CHECKED			

MODEL: HINSHAW - 0+00.00 [Sheet]
FILE NAME: V:\427\4 - IL 9 Bloomington\CADD\CADD Sheets\D70855-tlht-xsc-sldsr\roadsds.dgn

ORIGINAL SURVEY		BY	DATE
NOTE BOOK	SURVEYED		
NO.__	PLOTTED		
	TEMPLATE		
	AREAS		
	AREAS CHECKED		

FINAL SURVEY		BY	DATE
NOTE BOOK	SURVEYED		
NO.__	PLOTTED		
	TEMPLATE		
	AREAS		
	AREAS CHECKED		

MODEL: HINSHAW - 1+00.00 [Sheet]
FILE NAME: V:\4216 - IL 9 Bloomington\CADD\CADD Sheets\D570855-sht-xso-sideroadls.dgn

Hutchison Engineering, Inc.

USER NAME = BSinClaire		DESIGNED	-
PLOT SCALE = 0.1666633 ' / In.		DRAWN	-
PLOT DATE = 10/17/2023		CHECKED	-
		DATE	-
		REVISED	-
		REVISED	-
		REVISED	-
		REVISED	-

STATE OF ILLINOIS
DEPARTMENT OF TRANSPORTATION

FAP 693 (IL RTE 9)
N HINSHAWAVE CROSS SECTIONS

SCALE: H=10 V=5 | SHEET 2 OF 4 SHEETS | STA. 1+00.00 | TO STA. 1+50.00

F.A.P. RTE.	SECTION	COUNTY	TOTAL SHEETS	SHEET NO.
693	(129,109)RS3(16.4:1)CS(10FR)RS	McLEAN	218	216
	ILLINOIS	CONTRACT NO. 70855		
	FED. AID PROJECT			

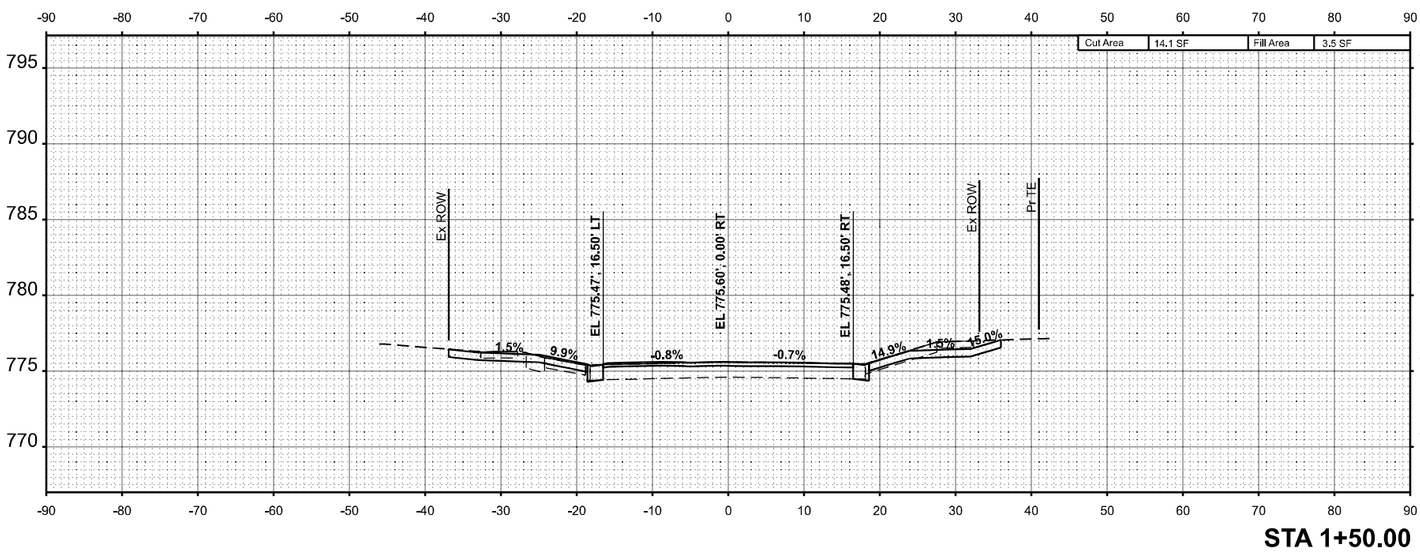

STA 1+50.00

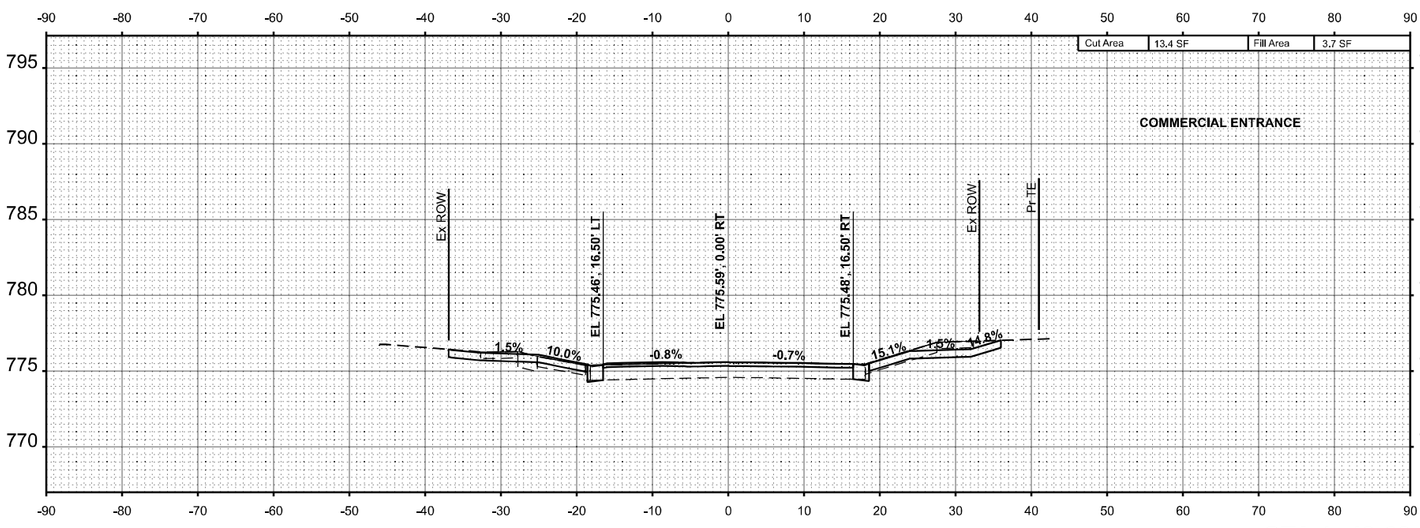

STA 1+49.68

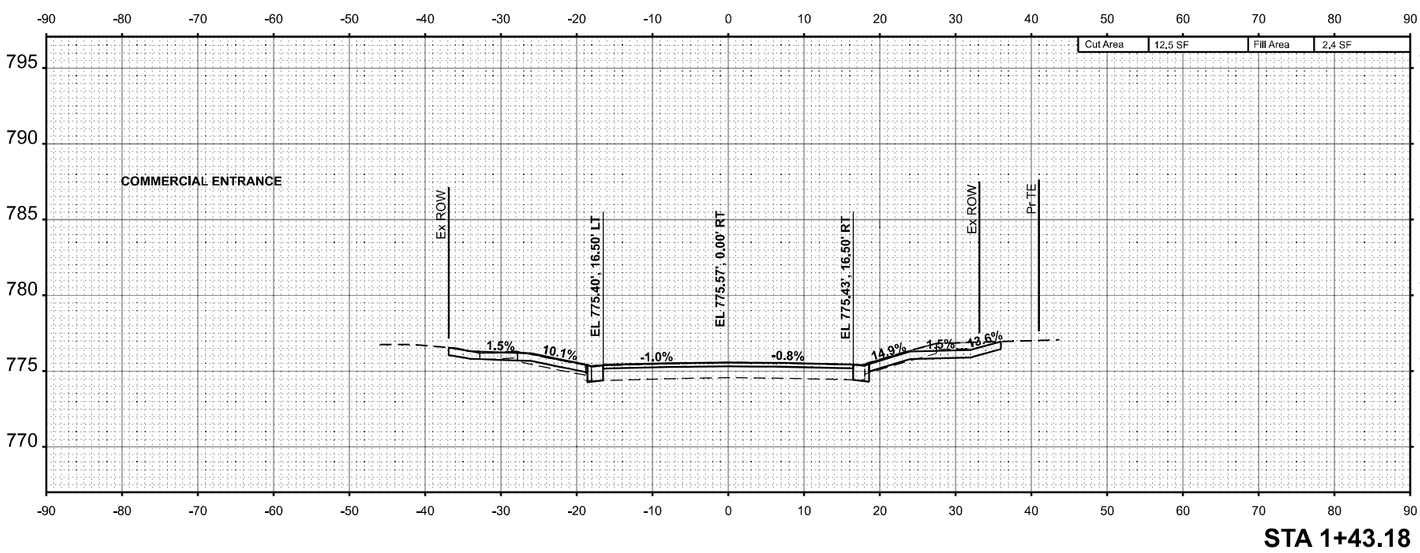

STA 1+43.18

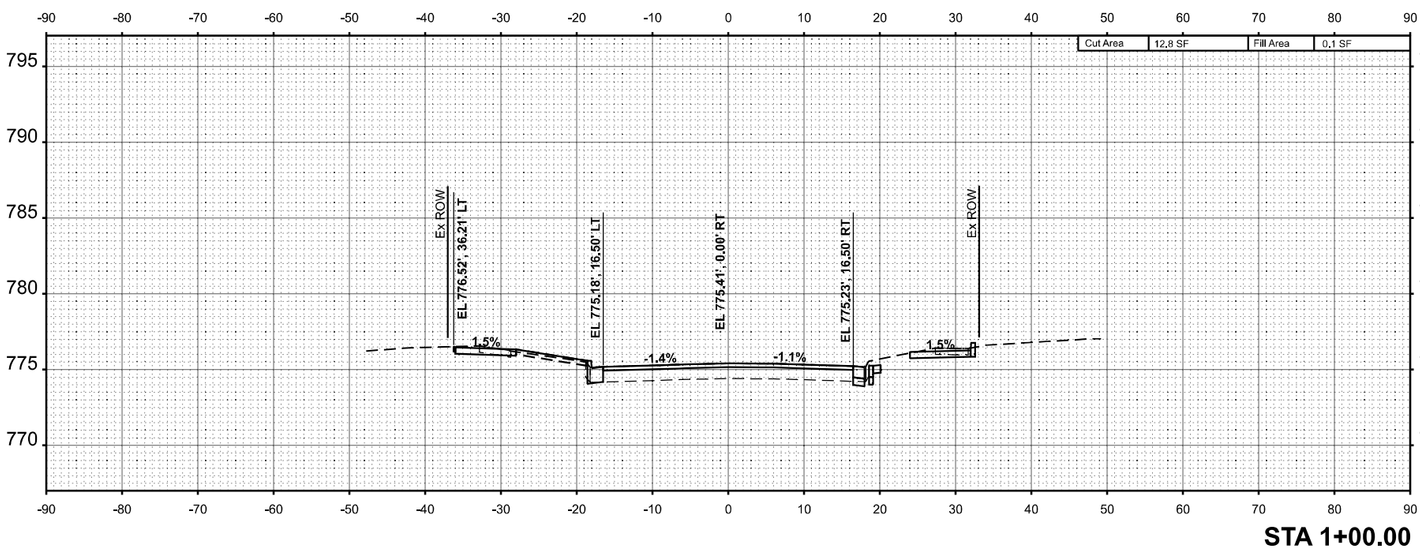

STA 1+00.00

STA 1+98.78

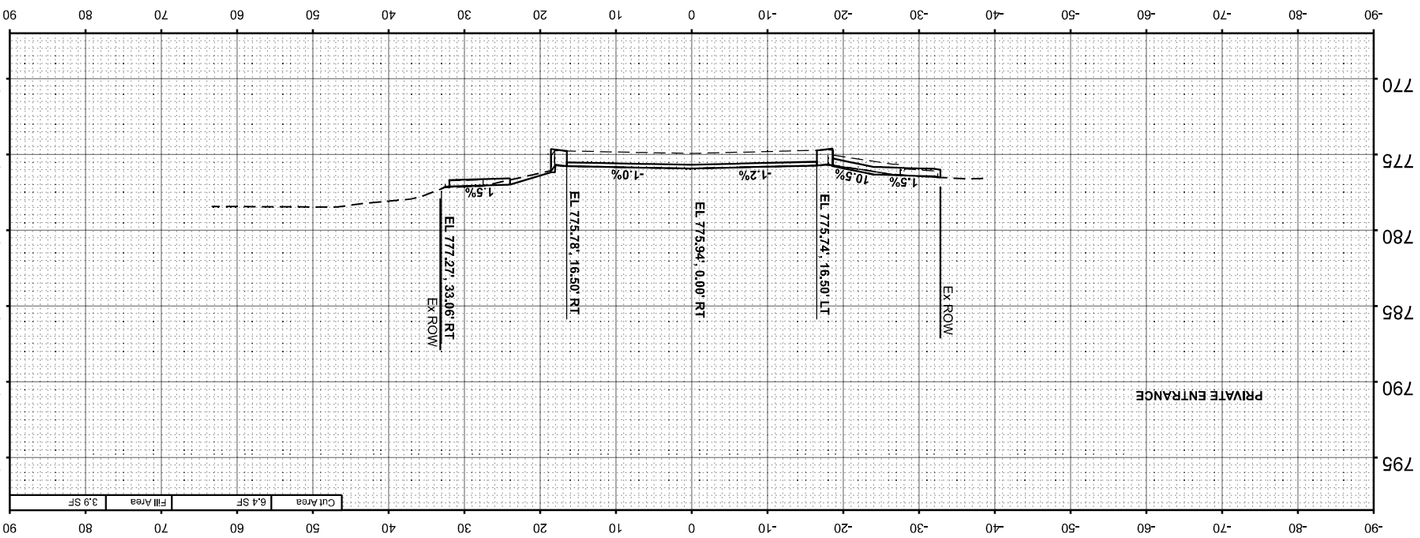

STA 2+00.00

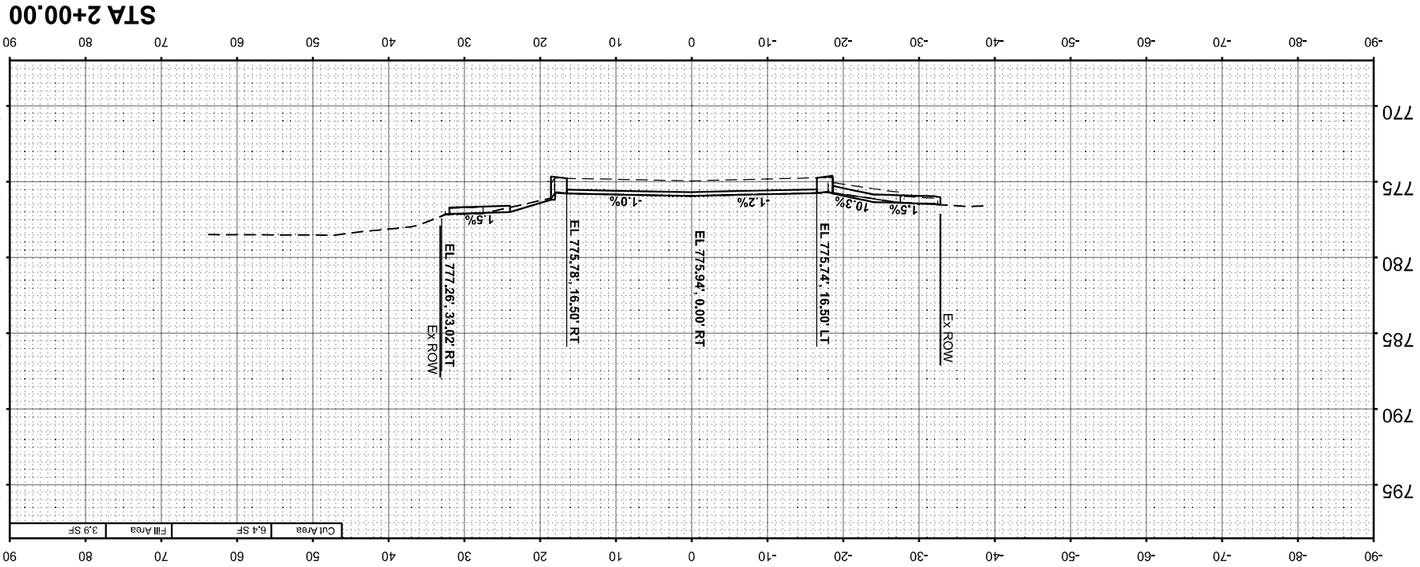

STA 2+50.00

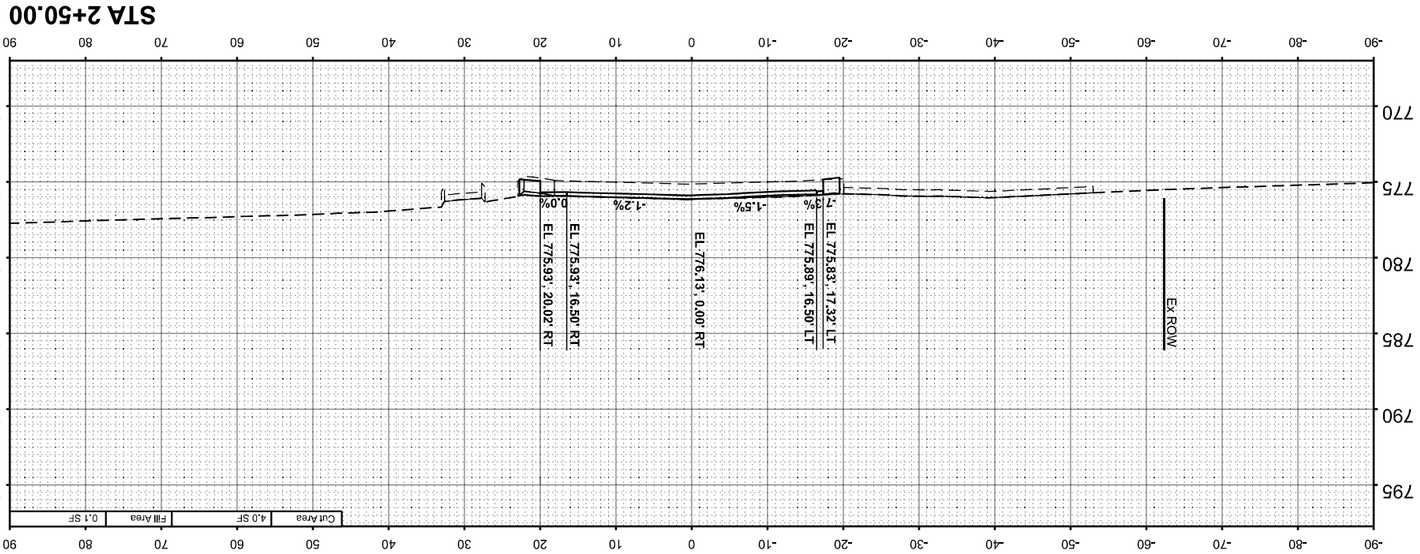

STA 2+70.72

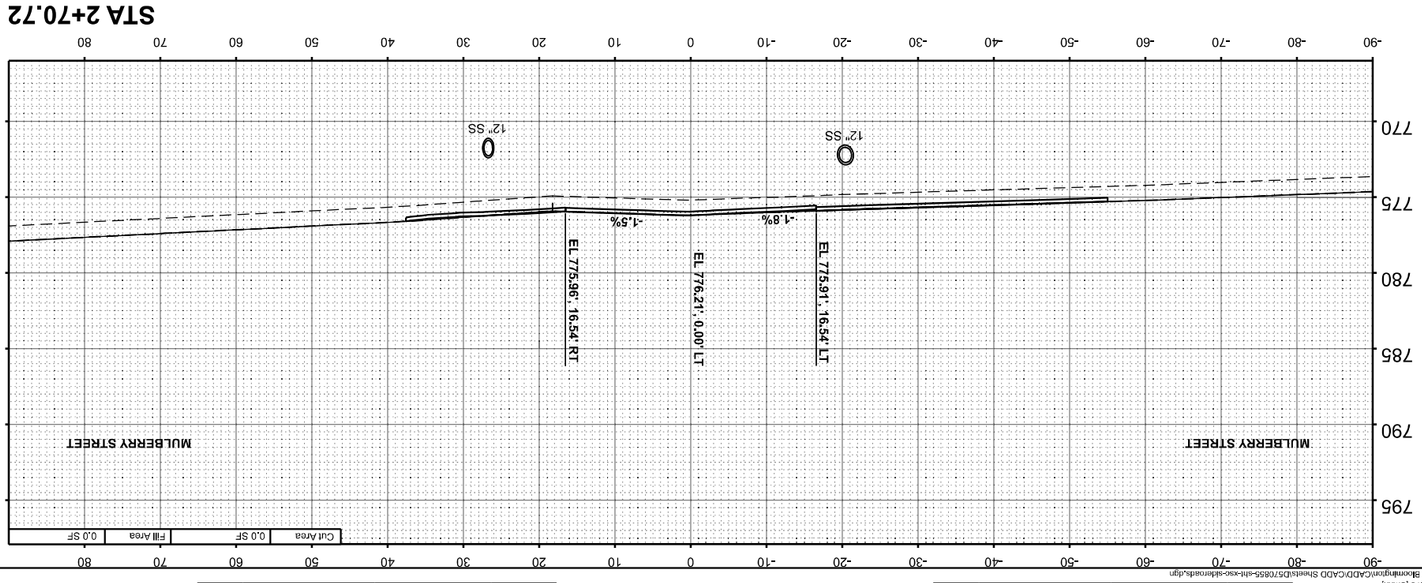

STATE OF ILLINOIS
DEPARTMENT OF TRANSPORTATION

FAP 693 (IL RTE 9)
N HINSHAWAVE CROSS SECTIONS

SCALE: H=10 V=5 | SHEET 3 OF 4 SHEETS | STA. 1+98.78 | TO STA. 2+70.72

F.A.P. RTE.	SECTION	COUNTY	TOTAL SHEETS	SHEET NO.
693	(129,109)RS3(16.4,1)CS(10FR)RS	McLEAN	218	217
	ILLINOIS	FED. AID PROJECT	CONTRACT NO. 70855	

Hutchison Engineering, Inc.

USER NAME	= BDeCrane	DESIGNED	-	REVISED	-
		DRAWN	-	REVISED	-
PLOT SCALE	= 0.16666833 ' / in.	CHECKED	-	REVISED	-
PLOT DATE	= 10/17/2023	DATE	-	REVISED	-

ORIGINAL			DATE
SURVEY NO.	SURVEYED		
	PLOTTED		
NOTE BOOK	TEMPLATE		
	AREAS		
	AREAS CHECKED		

FINAL			DATE
SURVEY NO.	SURVEYED		
	PLOTTED		
NOTE BOOK	TEMPLATE		
	AREAS		
	AREAS CHECKED		

MODEL: HINSHAW - 1+98.78 [Sheet]
FILE NAME: V:\4216 - IL 9 Bloomington\CADD\CADD Sheets\D5\7855-hhf-xxx-sdtxt-roads.dgn

FINAL SURVEY		BY	DATE
NOTE BOOK NO.	SURVEYED		
	PLOTTED		
	TEMPLATE		
	AREAS		
	AREAS CHECKED		

ORIGINAL SURVEY		BY	DATE
NOTE BOOK NO.	SURVEYED		
	PLOTTED		
	TEMPLATE		
	AREAS		
	AREAS CHECKED		

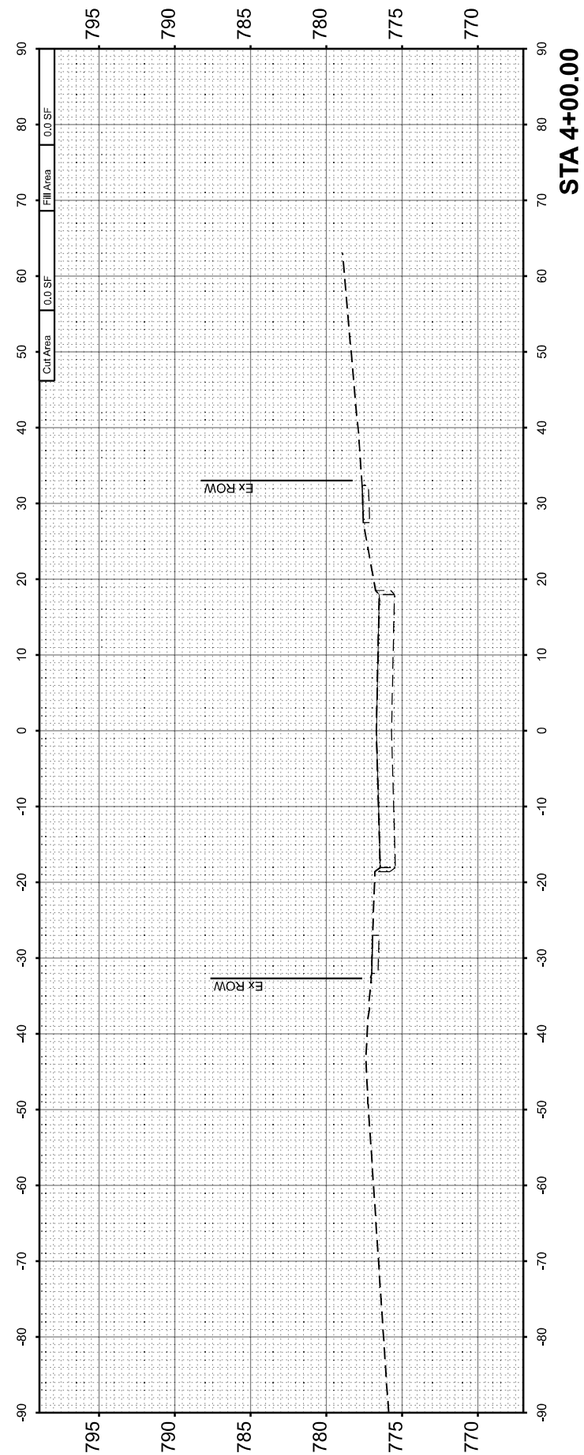

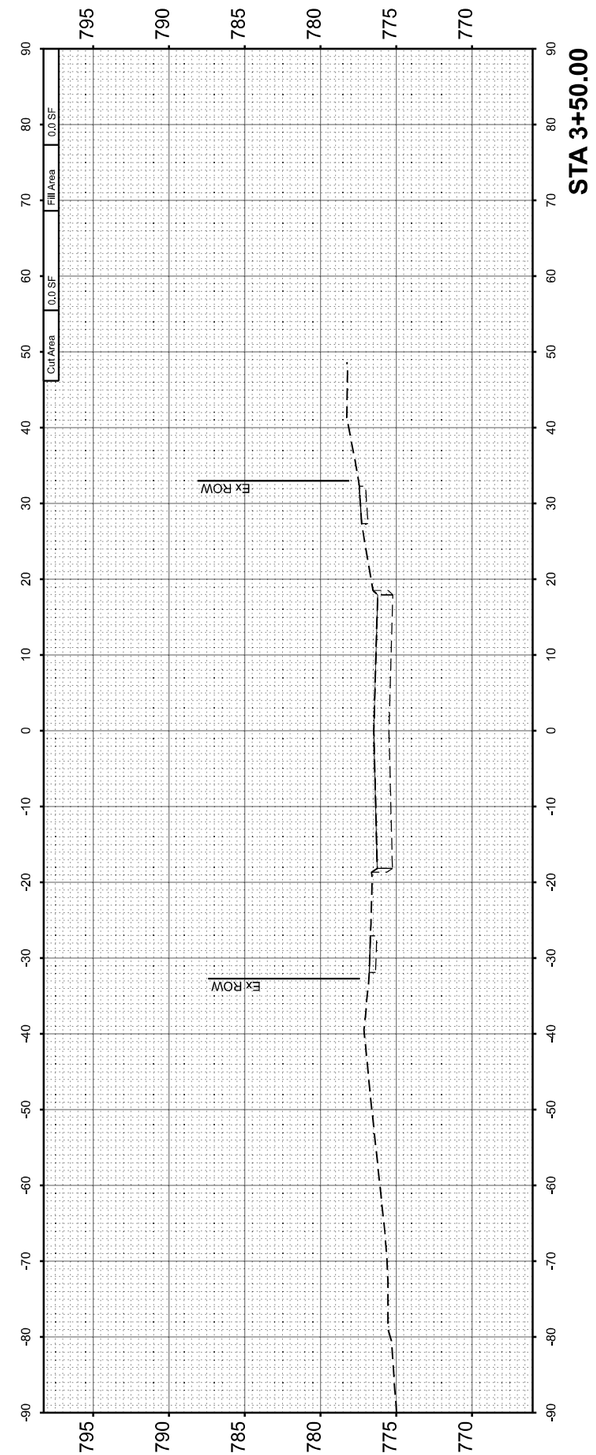

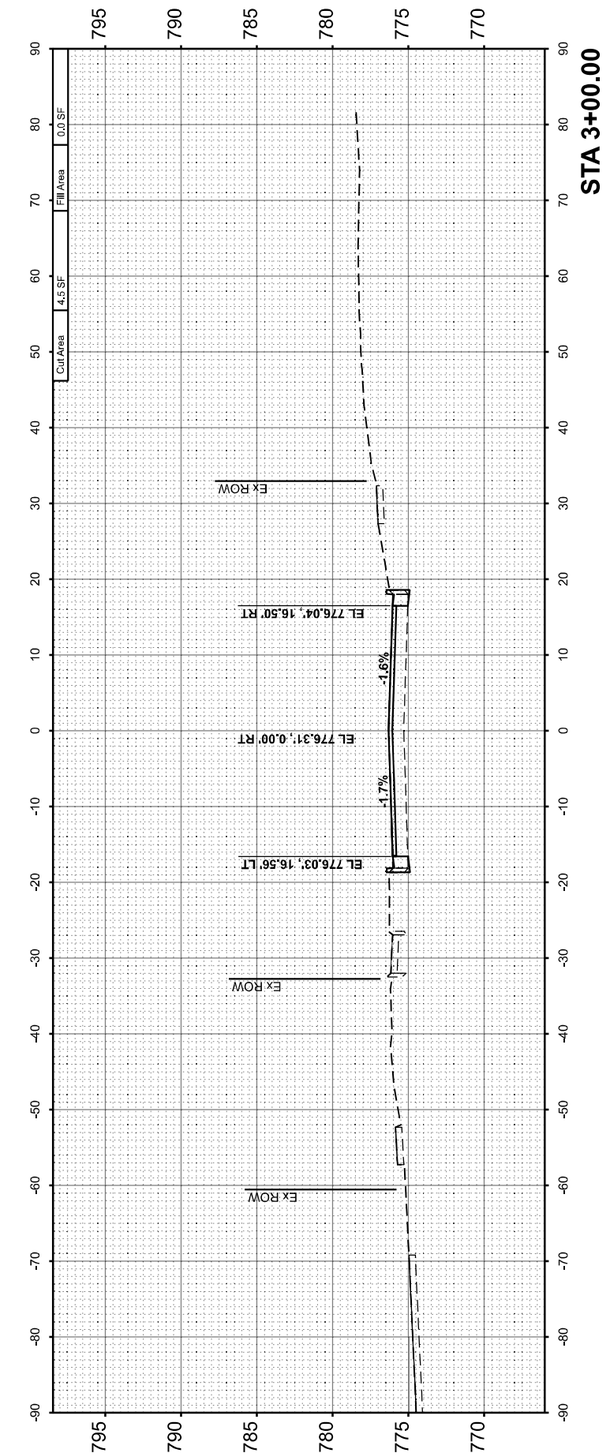

MODEL: HINSHAW - 3+00.00 [Sheet]
FILE NAME: V:\4216 - IL 9 Bloomington\CADD\CADD Sheets\D570855-sht-xsc-sidemaths.dgn

Hutchison Engineering, Inc.

USER NAME = BDeCraene	DESIGNED -	REVISED -	
	DRAWN -	REVISED -	
PLOT SCALE = 0.16666633 ' / in.	CHECKED -	REVISED -	
PLOT DATE = 10/17/2023	DATE -	REVISED -	

STATE OF ILLINOIS
DEPARTMENT OF TRANSPORTATION

FAP 693 (IL RTE 9)
N HINSHAWAVE CROSS SECTIONS

SCALE: H=10 V=5 | SHEET 4 OF 4 SHEETS | STA. 3+00.00 TO STA. 4+00.00

F.A.P. RTE.	SECTION	COUNTY	TOTAL SHEETS	SHEET NO.
693	(129,109)RS3(16,4.1)CS(10FR)RS	McLEAN	218	218
		CONTRACT NO. 70855		
		ILLINOIS	FED. AID PROJECT	