03-08-2024 LETTING ITEM 090

F.A.P. RTE.	SECTION	COUNTY	TOTAL SHEETS	SHEET NO.
869	(6,4)RS-2	FRANKLIN	24	1
	ILLINOIS	CONTRACT NO. 78A45		

STATE OF ILLINOIS
DEPARTMENT OF TRANSPORTATION

PROPOSED HIGHWAY PLANS

FAP ROUTE 869 (IL 14)
SECTION (6,4)RS-2
PROJECT NHPP-JWL9(922)
STANDARD OVERLAY
FRANKLIN COUNTY

C-99-053-24

D-99-024-24

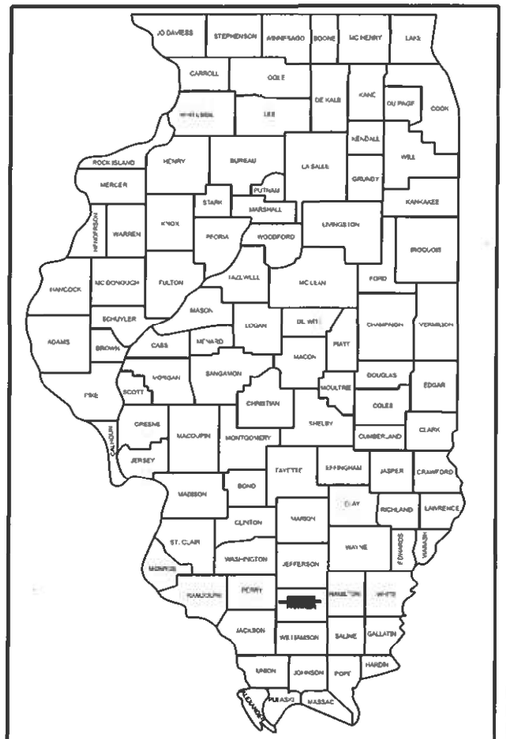

LOCATION OF SECTION INDICATED THUS: -

FOR INDEX OF SHEETS, SEE SHEET NO. 3

TRAFFIC DATA

FAP 869 (IL 14)			
	2021	2024	2044
PV	5,850	6,025	7,350
SU	225	230	285
MU	275	285	345
ADT	6,350	6,540	7,980

OMISSIONS

STA. 578+72.50 TO STA. 579+37.50 (SN 028-2016)
STA. 603+30 TO STA. 604+30 (SN 028-0076)
STA. 769+14.7 TO STA. 772+65.3 (SN 028-0020)

TOWNSHIPS
TYRONE AND BROWNING

DESIGN DESIGNATION: N/A
COORDINATE SYSTEM: N/A
POSTED SPEED: 45/55 MPH

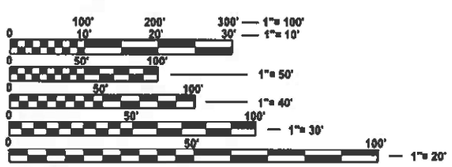

FULL SIZE PLANS HAVE BEEN PREPARED USING STANDARD ENGINEERING SCALES. REDUCED SIZED PLANS WILL NOT CONFORM TO STANDARD SCALES. IN MAKING MEASUREMENTS ON REDUCED PLANS, THE ABOVE SCALES MAY BE USED.

J.U.L.I.E.
JOINT UTILITY LOCATION INFORMATION FOR EXCAVATION
1-800-892-0123
OR 811

PROJECT ENGINEER: VALERIE ROLLA
PROJECT ENGINEER: MELISSA COLE

CONTRACT NO. 78A45

PROJECT BEGINS
STA. 532+34.20

PROJECT ENDS
STA. 844+50

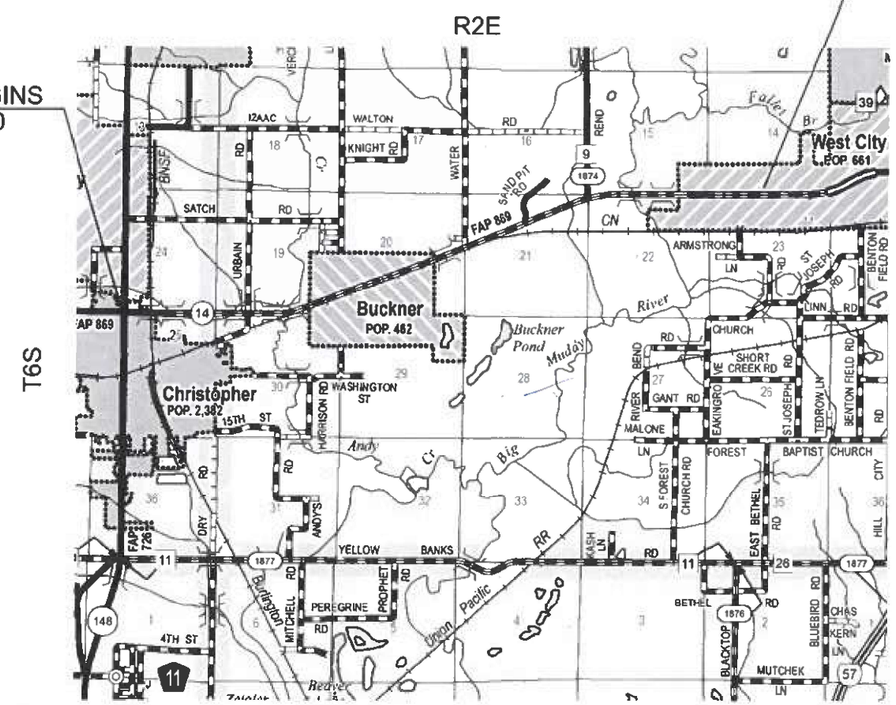

GROSS LENGTH = 30327.1 FT. = 5.7 MILE
NET LENGTH = 29,811.5 FT. = 5.6 MILE

STATE OF ILLINOIS
DEPARTMENT OF TRANSPORTATION

SUBMITTED Dec 11 2023
Kirk H. Brown
REGIONAL ENGINEER

February 2, 2024
ENGINEER OF DESIGN AND ENVIRONMENT

February 2, 2024
DIRECTOR OF HIGHWAYS PROJECT IMPLEMENTATION

PRINTED BY THE AUTHORITY OF THE STATE OF ILLINOIS

Prepared By: Charles Stein
DISTRICT STUDIES & PLANS ENGINEER

Examined By: Nancy Hess
DISTRICT LAND ACQUISITION ENGINEER

Examined By: Cor Nelson
DISTRICT PROGRAM DEVELOPMENT ENGINEER

Examined By: R C
DISTRICT OPERATIONS ENGINEER

Examined By: Douglas J Mueller
DISTRICT PROJECT IMPLEMENTATION ENGINEER

Examined By: Douglas J Mueller
DISTRICT CONSTRUCTION ENGINEER

Examined By: Pam Hargis
DISTRICT MATERIALS ENGINEER

MODEL: Signature Sheet [Sheet]
FILE NAME: C:\pw_work\pwidot\dcomm\d0927218\D978A45-Sht-Cover_Sig.dgn

USER NAME = Melissa.Cole	DESIGNED -	REVISED -	
	DRAWN -	REVISED -	
PLOT SCALE = 0.16666633 ' / in.	CHECKED -	REVISED -	
PLOT DATE = 12/4/2023	DATE -	REVISED -	

STATE OF ILLINOIS
DEPARTMENT OF TRANSPORTATION

SIGNATURE SHEET

SCALE: 1"=50' | SHEET 1 OF 1 SHEETS | STA. | TO STA.

F.A.P. RTE.	SECTION	COUNTY	TOTAL SHEETS	SHEET NO.
869	(6,4)RS-2	FRANKLIN	24	2
		CONTRACT NO. 78A45		
	ILLINOIS	FED. AID PROJECT		

INDEX OF SHEETS

SHEET NO	DESCRIPTION	
1	COVER SHEET	
2	SIGNATURE SHEET	
3	INDEX OF SHEETS, HIGHWAY STANDARDS, COMMITMENTS, GENERAL NOTES, STATION EQUATIONS	
4	MIX DESIGN, MTD TABLE	
5-7	SUMMARY OF QUANTITIES	
8-10	TYPICAL SECTIONS: IL 14	
11-19	SCHEDULES	
20	DETAILS:	ROUGH GROOVED SURFACE, UNEVEN LANES TEMP HMA TRANSITIONS
21	DETAILS:	MILLING TRANSITION AND CENTERLINE RUMBLE STRIP
22	DETAILS:	GUARDRAIL
23	DETAILS:	BUTT JOINT
24	DETAILS:	SIDEROAD AND ENTRANCE

GENERAL NOTES

FACTORS USED FOR ESTIMATING PLAN QUANTITIES ARE AS FOLLOWS AND SHALL NOT BE USED FOR THE BASIS OF FINAL QUANTITIES:

ALL HOT MIX ASPHALT	2.016 TONS/CU. YD.
ALL AGGREGATE	2.05 TONS/CU. YD.

THE QUANTITY OF SHORT TERM PAVEMENT MARKING SHOWN IN THE PLANS IS BASED ON ONE APPLICATION EACH FOR THE HMA SURFACE REMOVAL, BINDER COURSE, AND SURFACE COURSE

THE CONTRACTOR SHALL STAMP STATIONING IN THE PROPOSED HOT MIX ASPHALT SURFACE AT 300 FT INTERVALS ON ALTERNATING SIDES OF THE PAVEMENT AND AS DIRECTED BY THE ENGINEER. THE STATION SYMBOL STAMPS USED SHALL BE FURNISHED BY THE CONTRACTOR. THEY SHALL BE 5 1/2 IN. TALL, OF A DESIGN APPROVED BY THE ENGINEER, AND SHALL REMAIN THE PROPERTY OF THE CONTRACTOR.

HMA RESURFACING SHALL BE PLACED IN A SEQUENCE THAT WILL MINIMIZE THE TIME THE CENTERLINE EDGE IS EXPOSED TO TRAFFIC. WHEN AT THE END OF A DAY'S OPERATION THE EXPOSED CENTERLINE EDGE IS GREATER THAN 2,000 FT, THE CONTRACTOR SHALL BE REQUIRED TO PAVE IN THE ADJACENT LANE ON THE FOLLOWING WORK DAY. PRIOR TO WINTER SHUTDOWN, RESURFACING ON ADJACENT LANES IS TO BE BROUGHT UP TO THE SAME ELEVATION.

LONGITUDINAL JOINT SEALANT SHALL BE PLACED UNDER THE HMA SURFACE COURSE

VIBRATORY ROLLERS WILL NOT BE ALLOWED WITHIN THE CORPORATE LIMITS OF CHRISTOPHER, BUCKNER, AND WEST CITY.

INCIDENTAL HOT-MIX ASPHALT SURFACING SHALL BE PAVED IN A SEPARATE OPERATION FROM THE MAINLINE PAVEMENT

COMMITMENTS: NONE

HIGHWAY STANDARDS

000001-08_STANDARDSYMBOLSABBREVIATIONS-PATTERNS-001
001001-02_AREASOFREINFREBARS
001006_DECIMALOFINCH-FOOT
420001-10_PAVEMENT JOINTS
420701-03_PAVEMENTWELDEDWIREREINFORCEMENT
442201-03_CLASSC-DPATCHES
630001-13_STEELPLATEBEAMGRDRAIL
630301-09_SHLDWIDENFORTYPE1GRDRAILTERMS
631031-18_TRAFBARTERMTYPE6
642006-01_SHOULDERRUMBLESTRIP8IN-240
701001-02_OFFRDOP-2L2W-15FTMINFROMEOP
701006-05_OFFRDOP-2L2W-15FTTOEOP
701011-04_OFFRDMOVINGOP-2L2W-DAYONLY
701301-04_LNCLOSURE2L2W-SHORTTIMEOP
701306-04_LNCLOSURE2L2W-SLOWMOVEOPDAYONLY45MPHORMORE
701311-03_LNCLOSURE2L2W-MOVINGOPDAYONLY
701336-07_LNCLOSURE2L2W-WORKAREASINSERIES45MPHORMORE
701501-06_URBANLNCLOSURE2L2W-UNDIVIDED
701901-09_TRAFCNTRLDEVICES
725001-01_OBJECTANDTERMINALMARKERS
780001-05_TYPICALPVMTMRKINGS
781001-04_TYPICALAPPRAISEDREFLCPVMTMRKRS
782006-01_GUARDRAILANDBARRIERWALLREFLECTORMOUNTINGDEATILS

STATION EQUATIONS

EQN	STA	542+04.50	BK	=	STA	540+73.30	AH
EQN	STA	565+83.10	BK	=	STA	566+96.19	AH
EQN	STA	585+00.00	BK	=	STA	585+19.37	AH
EQN	STA	611+07.62	BK	=	STA	610+95.61	AH
EQN	STA	666+84.40	BK	=	STA	667+00.00	AH
EQN	STA	692+80.05	BK	=	STA	693+06.54	AH
EQN	STA	757+14.82	BK	=	STA	765+74.55	AH
EQN	STA	816+91.90	BK	=	STA	816+84.50	AH
EQN	STA	839+08.47	BK	=	STA	839+13.52	AH

REV. - MS

MODEL: index [Sheet]
FILE NAME: c:\pw_work\pwidot\colemm\d092721\D78A45-SHB-Index_GenNotes.dgn

USER NAME = Melissa.Cole	DESIGNED -	REVISED -	STATE OF ILLINOIS DEPARTMENT OF TRANSPORTATION
	DRAWN -	REVISED -	
PLOT SCALE = 0.16666633 ' / in.	CHECKED -	REVISED -	
PLOT DATE = 12/4/2023	DATE -	REVISED -	

INDEX OF SHEETS, HIGHWAY STANDARDS
GENERAL NOTES, AND STATION EQUATIONS

SCALE: | SHEET OF 2 SHEETS | STA. TO STA.

F.A.P RTE.	SECTION	COUNTY	TOTAL SHEETS	SHEET NO.
869	(6,4)RS-2	FRANKLIN	24	3

CONTRACT NO. 78A45

ILLINOIS | FED. AID PROJECT

HMA MIXTURE REQUIREMENTS TABLES

The following HMA mixture requirements are applicable for this project

Locations	Hot-Mix Asphalt Surface Course, Incidental Hot-Mix Asphalt Surfacing
Mixture Use(s):	Hot-Mix Asphalt Surface Course, Mix D, N70
AB/PG:	PG64-22
Design Air Voids:	4.0 %, 70 Gyration Design
Mixture Composition: (Gradation Mixture)	IL 9.5mm
Friction Aggregate:	Mix D
Mixture Weight:	112 lbs/Sq Yd/in
Quality Management Program:	QCP
Sublot Size:	1,000 tons
Material Transfer Device (Required?)	Surface Course - Yes; Incidental - No

Locations	Hot-Mix Asphalt Binder Course
Mixture Use(s):	Hot-Mix Asphalt Binder Course, IL-9.5FG, N70
AB/PG:	PG64-22
Design Air Voids:	4.0 %, 70 Gyration Design
Mixture Composition: (Gradation Mixture)	IL-9.5mm Fine Graded
Friction Aggregate:	None
Mixture Weight:	112 lbs/Sq Yd/in
Quality Management Program:	QCP
Sublot Size:	1,000 tons
Material Transfer Device (Required?)	Yes

Locations	Hot-Mix Asphalt Shoulders
Mixture Use(s):	Hot-Mix Asphalt Surface Course, Mix C, N30
AB/PG:	PG64-22
Design Air Voids:	4.0 %, 30 Gyration Design
Mixture Composition: (Gradation Mixture)	IL-9.5L
Friction Aggregate:	None
Mixture Weight:	112 lbs/Sq Yd/in
Quality Management Program:	QCQA
Sublot Size:	3,000 tons
Material Transfer Device (Required?)	No

MTD CROSSING RESTRICTIONS TABLE

ROUTE (IL 14) SN & CENTERLINE STATION		EXISTING FILL HEIGHT OVER BOX CULVERT FOOT	THICKNESS OF EXISTING PAVEMENT OVER BOX CULVERT FOOT	MAXIMUM GROSS WEIGHT RESTRICTION	MTD CROSSING RESTRICTIONS
SN 028-2014	STA 550+00	1'	1.1'	40 TON	Emptied *
SN 028-2016	STA 579+10	1.6'	1.1'	40 TON	Emptied *
SN 028-2013	STA 595+00	1'	1.1'	40 TON	Emptied *
SN 028-0076	STA 603+80	N/A	N/A	40 TON	Emptied *
SN 028-7046	STA 663+47	2'	1.1'	40 TON	Emptied *
SN 028-2011	STA 675+25	1'	1.1'	40 TON	Emptied *
SN 028-0020	STA 770+90	N/A	N/A	40 TON	Emptied *
SN 028-2012	STA 784+06	4'	1.1'	40 TON	Emptied *

MODEL: MIX MTD [Sheet]
FILE NAME: c:\pw_work\pwidot\coleममd\d092718\D978A45-Sht8-Index_GenNotes.dgn

USER NAME = Melissa.Cole	DESIGNED -	REVISED -
	DRAWN -	REVISED -
PLOT SCALE = 0.16666633 ' / in.	CHECKED -	REVISED -
PLOT DATE = 12/4/2023	DATE -	REVISED -

STATE OF ILLINOIS
DEPARTMENT OF TRANSPORTATION

HMA MIXTURE REQUIREMENTS AND
MTD CROSSING RESTRICTIONS TABLE

SCALE: SHEET OF 2 SHEETS STA. TO STA.

F.A.P RTE.	SECTION	COUNTY	TOTAL SHEETS	SHEET NO.
869	(6,4)RS-2	FRANKLIN	24	4

CONTRACT NO. 78A45

ILLINOIS FED. AID PROJECT

SUMMARY OF QUANTITIES

COUNTY:	FRANKLIN CO.	FRANKLIN CO.
ROUTE:	FAP 869 (IL 14)	FAP 869 (IL 14)
FUNDING:	80% FEDERAL 20% STATE	LOCAL
LOCATION:	RURAL	PARKING

CODE NUMBER	ITEM DESCRIPTION	UNIT	TOTAL QUANTITY	ROADWAY 0005	LANES 0044
40600290	BITUMINOUS MATERIALS (TACK COAT)	POUND	67,346	66,745	601
40600370	LONGITUDINAL JOINT SEALANT	FOOT	29,819	29,819	
40600982	HOT-MIX ASPHALT SURFACE REMOVAL - BUTT JOINT	SQ YD	156	156	
40600990	TEMPORARY RAMP	SQ YD	369	369	
40602970	HOT-MIX ASPHALT BINDER COURSE, IL-9.5FG, N70	TON	5,246	5,182	64
40604062	HOT-MIX ASPHALT SURFACE COURSE, IL-9.5, MIX "D", N70	TON	6,239	6,163	76
40800050	INCIDENTAL HOT-MIX ASPHALT SURFACING	TON	94	94	
44000155	HOT-MIX ASPHALT SURFACE REMOVAL, 1 1/2"	SQ YD	81,249	81,249	
44000159	HOT-MIX ASPHALT SURFACE REMOVAL, 2 1/2"	SQ YD	18,006	17,116	890
44201385	CLASS C PATCHES, TYPE I, 13 INCH	SQ YD	290	290	
44201389	CLASS C PATCHES, TYPE II, 13 INCH	SQ YD	676	676	
44201394	CLASS C PATCHES, TYPE III, 13 INCH	SQ YD	108	108	
48102100	AGGREGATE WEDGE SHOULDER, TYPE B	TON	683	683	
48203100	HOT-MIX ASPHALT SHOULDERS	TON	3,935	3,935	

REV. - MS

MODEL: SOQ [Sheet]
FILE NAME: c:\pw_work\pwidot\colemm\d0927218\D978A45-SHtC-SoQ.dgn

USER NAME = Melissa.Cole	DESIGNED -	REVISED -	STATE OF ILLINOIS DEPARTMENT OF TRANSPORTATION
	DRAWN -	REVISED -	
PLOT SCALE = 0.16666633 ' / in.	CHECKED -	REVISED -	
PLOT DATE = 12/4/2023	DATE -	REVISED -	

SUMMARY OF QUANTITIES

SCALE: SHEET OF 3 SHEETS STA. TO STA.

F.A.P RTE.	SECTION	COUNTY	TOTAL SHEETS	SHEET NO.
869	(6,4)RS-2	FRANKLIN	24	5

CONTRACT NO. 78A45

ILLINOIS FED. AID PROJECT

SUMMARY OF QUANTITIES - CONT

	CODE NUMBER	ITEM DESCRIPTION	UNIT	TOTAL QUANTITY	FRANKLIN CO. FAP 869 (IL 14) 80% FEDERAL 20% STATE RURAL ROADWAY 0005	FRANKLIN CO. FAP 869 (IL 14) LOCAL PARKING LANES 0044
	50300255	CONCRETE SUPERSTRUCTURE	CU YD	0.4	0.4	
	50800205	REINFORCEMENT BARS, EPOXY COATED	POUND	69	69	
*	63000001	STEEL PLATE BEAM GUARDRAIL, TYPE A, 6 FOOT POSTS	FOOT	400	400	
*	63100085	TRAFFIC BARRIER TERMINAL, TYPE 6	EACH	4	4	
*	63100167	TRAFFIC BARRIER TERMINAL, TYPE 1 (SPECIAL) TANGENT	EACH	4	4	
	63200310	GUARDRAIL REMOVAL	FOOT	520	520	
	64200108	SHOULDER RUMBLE STRIPS, 8 INCH	FOOT	57,335	57,335	
	67000400	ENGINEER'S FIELD OFFICE, TYPE A	CAL MO	6	6	
	67100100	MOBILIZATION	L SUM	1	1	
	70100460	TRAFFIC CONTROL AND PROTECTION, STANDARD 701306	L SUM	1	1	
	70100600	TRAFFIC CONTROL AND PROTECTION, STANDARD 701336	L SUM	1	1	
	70102620	TRAFFIC CONTROL AND PROTECTION, STANDARD 701501	L SUM	1	1	
	70107025	CHANGEABLE MESSAGE SIGN	CAL DA	28	28	
	70300100	SHORT TERM PAVEMENT MARKING	FOOT	9,159	9,159	

* SPECIALTY ITEM

SUMMARY OF QUANTITIES - CONT

	CODE NUMBER	ITEM DESCRIPTION	UNIT	TOTAL QUANTITY	FRANKLIN CO. ROUTE: FAP 869 (IL 14) FUNDING: 80% FEDERAL 20% STATE LOCATION: RURAL ROADWAY 0005	FRANKLIN CO. ROUTE: FAP 869 (IL 14) FUNDING: LOCAL LOCATION: PARKING LANES 0044
	70300150	SHORT TERM PAVEMENT MARKING REMOVAL	SQ FT	3,053	3,053	
	70300221	TEMPORARY PAVEMENT MARKING - LINE 4"- PAINT	FOOT	75,703	75,703	
*	72501000	TERMINAL MARKER - DIRECT APPLIED	EACH	4	4	
*	78001110	PAINT PAVEMENT MARKING - LINE 4"	FOOT	75,703	75,703	
*	78100100	RAISED REFLECTIVE PAVEMENT MARKER	EACH	391	391	
*	78200005	GUARDRAIL REFLECTORS, TYPE A	EACH	16	16	
	78300200	RAISED REFLECTIVE PAVEMENT MARKER REMOVAL	EACH	391	391	
	78300201	PAVEMENT MARKING REMOVAL - GRINDING	SQ FT	25,241	25,241	
	X0326697	CENTER LINE - RUMBLE STRIP - 8"	FOOT	7,462	7,462	
	X4430200	STRIP REFLECTIVE CRACK CONTROL TREATMENT	FOOT	59,628	59,628	
	Z0034105	MATERIAL TRANSFER DEVICE	TON	11,485	11,345	140

* SPECIALTY ITEM

REV. - MS

TYPICAL SECTION
FAP 869 (IL 14)
FRANKLIN COUNTY

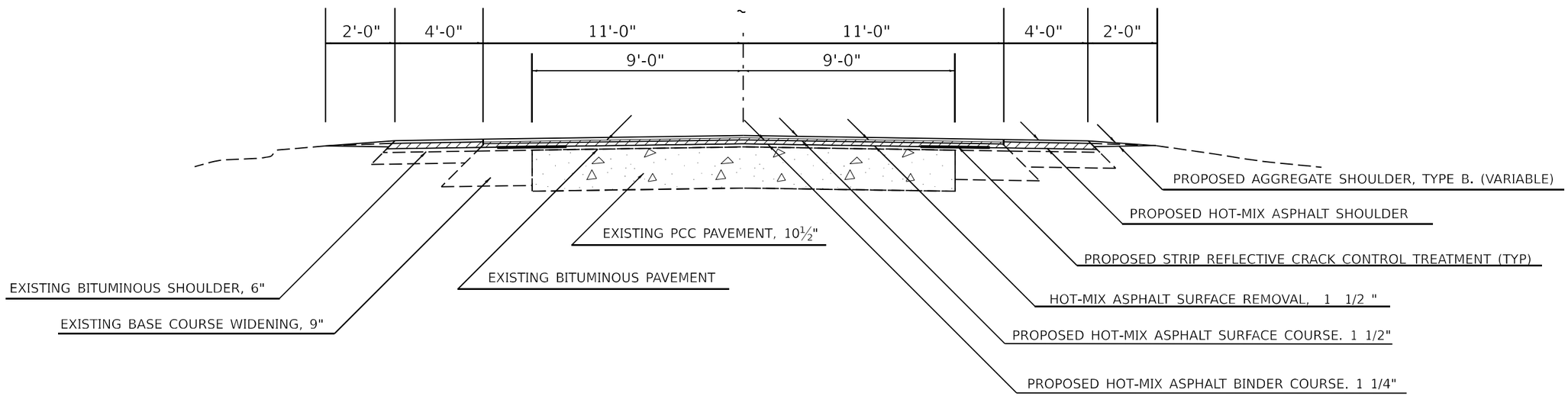

TO BE USED:

STA. 542+50.00 TO 565+83.10
EQ. STA 565+83.10 BK= 566+96.19 AH
STA. 566+96.19 TO 578+76.00
STA. 579+24.00 TO 585+00.00
EQ. STA. 585+00.00 BK= 585+19.37 AH
STA. 585+19.37 TO 603+42.00
STA. 647+10.00 TO 666+84.40
EQ. STA. 666+84.40 BK= 667+00.00 AH
STA. 667+00.00 TO 692+80.05

EQ. STA. 692+80.05 BK= 693+06.54 AH
STA. 693+06.54 TO 757+14.82
EQ. STA. 757+14.82 BK= 765+74.55
STA. 765+74.55 TO 768+95.00
STA. 772+85.00 TO 816+91.90
EQ. STA. 816+91.90 BK= 816+84.50 AH
STA. 816+84.50 TO 839+08.47
EQ. STA. 839+08.47 BK= 839+13.52 AH
STA. 839+13.52 TO 844+50.00

MODEL: Typical-1 [Sheet]
FILE NAME: c:\pw_work\pwidot\cole\mm\d0927218\D978A45-ShtD-Typicals.dgn

USER NAME = Melissa.Cole	DESIGNED -	REVISED -	
	DRAWN -	REVISED -	
PLOT SCALE = 0.16666633 ' / in.	CHECKED -	REVISED -	
PLOT DATE = 12/4/2023	DATE -	REVISED -	

STATE OF ILLINOIS
DEPARTMENT OF TRANSPORTATION

TYPICAL SECTION

SCALE: SHEET OF 3 SHEETS STA. TO STA.

F.A.P RTE.	SECTION	COUNTY	TOTAL SHEETS	SHEET NO.
869	(6,4)RS-2	FRANKLIN	24	8
		CONTRACT NO. 78A45		
		ILLINOIS FED. AID PROJECT		

TYPICAL SECTION
FAP 869 (IL 14)
FRANKLIN COUNTY

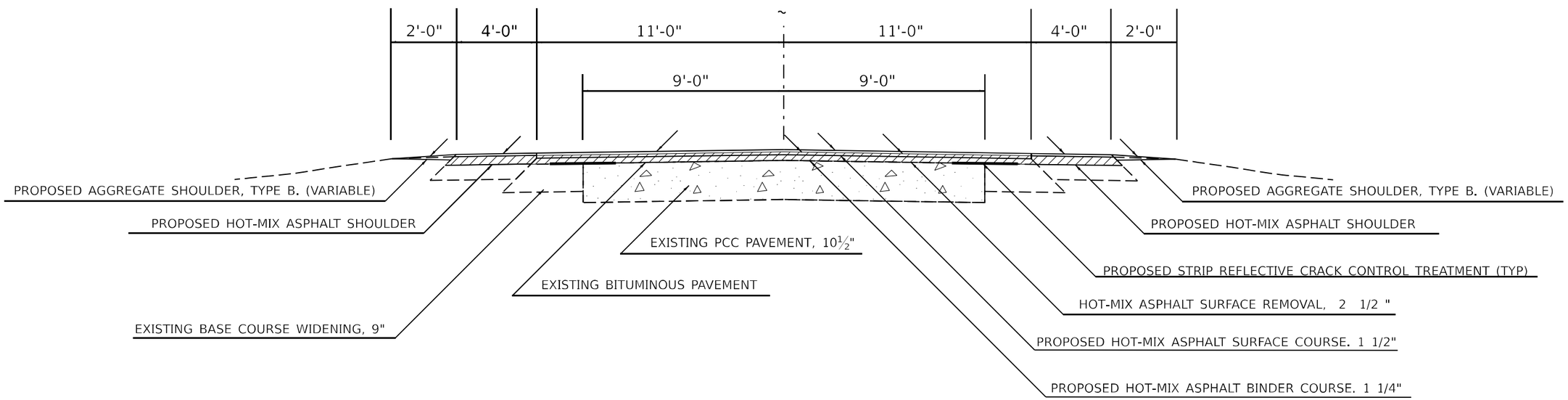

TO BE USED

STA. 603+42 TO 647+10

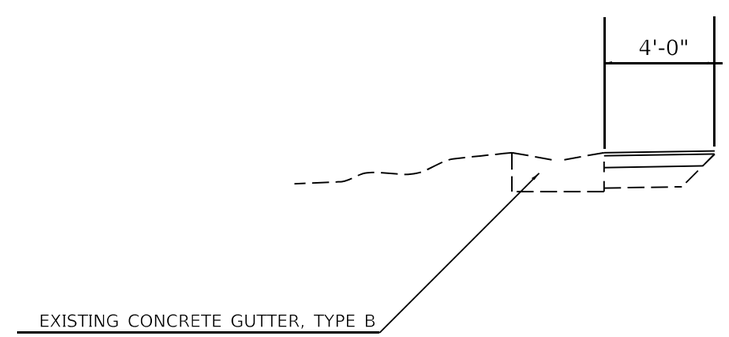

TO BE USED

STA. 603+42 TO 603+90
STA. 605+48 TO 608+28
STA. 633+75 TO 636+93
STA. 637+35 TO 639+24
STA. 643+80 TO 647+10

MODEL: Typical-2 [Sheet]
FILE NAME: c:\pw_work\pwidot\cdemm\d0927218\D978A45-SHD-Typicals.dgn

USER NAME = Melissa.Cole	DESIGNED -	REVISED -	STATE OF ILLINOIS DEPARTMENT OF TRANSPORTATION
	DRAWN -	REVISED -	
PLOT SCALE = 0.16666633 ' / in.	CHECKED -	REVISED -	
PLOT DATE = 12/4/2023	DATE -	REVISED -	

TYPICAL SECTION

SCALE: | SHEET OF 3 SHEETS | STA. TO STA.

F.A.P RTE.	SECTION	COUNTY	TOTAL SHEETS	SHEET NO.
869	(6,4)RS-2	FRANKLIN	24	9
		CONTRACT NO. 78A45		
		ILLINOIS	FED. AID PROJECT	

TYPICAL SECTION
FAP 869 (IL 14)
FRANKLIN COUNTY

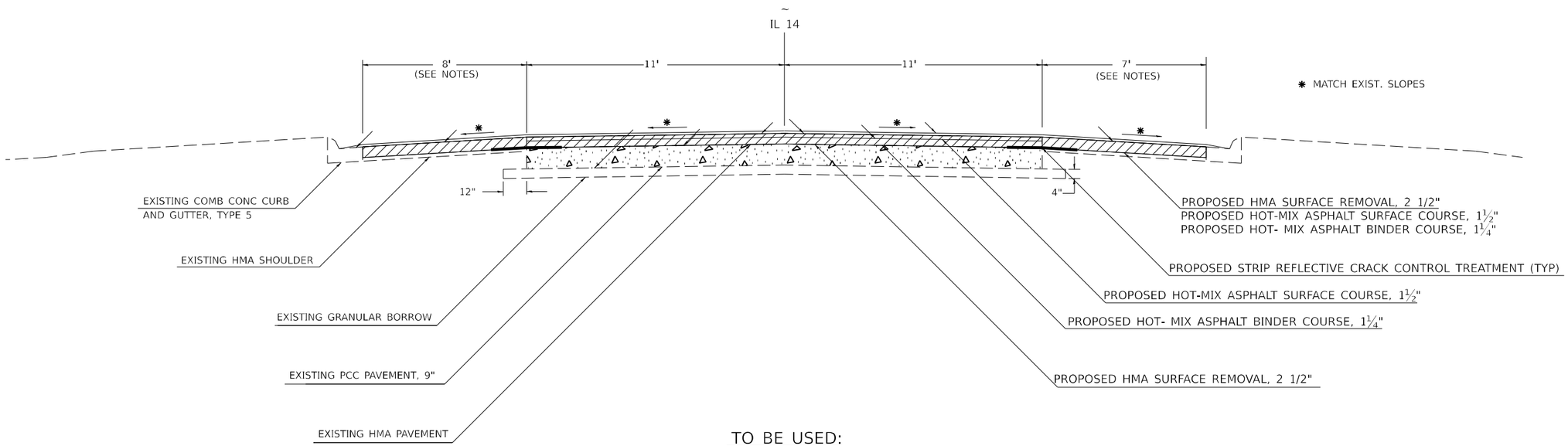

TO BE USED:

STA 532+34.20 TO STA 542+50

NOTES:

1. PARKING LANES FROM STA 532+34 TO STA 537+68, THE LEFT PARKING LANE IS 8' WIDE AND THE RIGHT PARKING LANE IS 7' WIDE.
2. PARKING LANE WORK ENDS AT STA 537+68 (STATE STREET). THE GUTTER FLAG IS AT THE EDGE OF PAVEMENT FROM STA. 537+68 TO 542+50.

MODEL: Typical 1 [Sheet]
FILE NAME: c:\pw_work\pwidot\cole\mm\d0927218\D978A45-Sht0-Typicals.dgn

USER NAME = Melissa.Cole	DESIGNED -	REVISED -	
	DRAWN -	REVISED -	
PLOT SCALE = 0.16666633 ' / in.	CHECKED -	REVISED -	
PLOT DATE = 12/4/2023	DATE -	REVISED -	

STATE OF ILLINOIS
DEPARTMENT OF TRANSPORTATION

TYPICAL SECTION

SCALE: 1"=50' | SHEET OF 3 SHEETS | STA. TO STA.

F.A.P RTE.	SECTION	COUNTY	TOTAL SHEETS	SHEET NO.
869	(6,4)RS-2	FRANKLIN	24	10

CONTRACT NO. 78A45

ILLINOIS | FED. AID PROJECT

PATCHING SCHEDULE

LOCATION	LENGTH	WIDTH	AREA	CLASS C, TY I, 13"	CLASS C, TY II, 13"	CLASS C, TY III, 13"
STATION	FOOT	FOOT	SQ YD	SQYD	SQYD	SQYD
EAST BOUND LANE IL 14						
571+59	4	11.25	5.0		5.00	
579+55	4	11.25	5.0		5.00	
580+26	4	11.25	5.0		5.00	
611+83	4	11.25	5.0		5.00	
625+52	4	11.25	5.0		5.00	
639+11	4	11.25	5.0		5.00	
646+65	4	11.25	5.0		5.00	
649+13	4	11.25	5.0		5.00	
653+76	4	11.25	5.0		5.00	
671+16	4	11.25	5.0		5.00	
671+69	4	11.25	5.0		5.00	
677+12	4	11.25	5.0		5.00	
680+66	4	11.25	5.0		5.00	
683+49	4	11.25	5.0		5.00	
685+70	4	11.25	5.0		5.00	
703+00	4	11.25	5.0		5.00	
707+04	5	11.25	6.3		6.25	
708+82	4	11.25	5.0		5.00	
716+14	4	11.25	5.0		5.00	
716+63	4	11.25	5.0		5.00	
719+66	4	11.25	5.0		5.00	
720+16	4	11.25	5.0		5.00	
720+66	4	11.25	5.0		5.00	
725+68	4	11.25	5.0		5.00	
726+19	4	11.25	5.0		5.00	
728+20	4	11.25	5.0		5.00	
728+72	4	11.25	5.0		5.00	
730+28	4	11.25	5.0		5.00	
732+24	7	11.25	8.8		8.75	
738+26	4	11.25	5.0		5.00	
740+78	5	11.25	6.3		6.25	
742+32	4	11.25	5.0		5.00	
745+00	15	11.25	18.8			18.75
749+90	4	11.25	5.0		5.00	
751+41	15	11.25	18.8			18.75
751+93	4	11.25	5.0		5.00	
752+48	4	11.25	5.0		5.00	
753+52	4	11.25	5.0		5.00	
756+93	4	11.25	5.0		5.00	
766+35	4	11.25	5.0		5.00	
767+39	4	11.25	5.0		5.00	
777+16	4	11.25	5.0		5.00	
778+16	6	11.25	7.5		7.50	
778+16	4	11.25	5.0		5.00	
780+15	8	11.25	10.0		10.00	
			SUBTOTAL EB	0.00	228.75	37.50

PATCHING SCHEDULE

LOCATION	LENGTH	WIDTH	AREA	CLASS C, TY I, 13"	CLASS C, TY II, 13"	CLASS C, TY III, 13"
STATION	FOOT	FOOT	SQ YD	SQYD	SQYD	SQYD
EAST BOUND LANE IL 14						
782+18	4	11.25	5.0		5.00	
785+90	12	11.25	15.0			15.00
787+83	8	11.25	10.0		10.00	
788+00	21	5.5	12.8		12.83	
789+26	4	11.25	5.0		5.00	
790+70	4	11.25	5.0		5.00	
790+90	7	11.25	8.8		8.75	
792+15	5	11.25	6.3		6.25	
793+25	12	5.5	7.3		7.33	
794+10	7	11.25	8.8		8.75	
794+66	20	5.5	12.2		12.22	
795+00	6	11.25	7.5		7.50	
795+22	12	5.5	7.3		7.33	
795+42	6	11.25	7.5		7.50	
806+04	4	11.25	5.0		5.00	
806+85	4	11.25	5.0		5.00	
810+75	9	11.25	11.3		11.25	
813+68	4	11.25	5.0		5.00	
819+34	4	11.25	5.0		5.00	
819+43	4	11.25	5.0		5.00	
821+12	4	11.25	5.0		5.00	
821+44	6	11.25	7.5		7.50	
822+21	4	11.25	5.0		5.00	
825+20	4	11.25	5.0		5.00	
825+71	4	11.25	5.0		5.00	
826+07	4	11.25	5.0		5.00	
827+21	4	11.25	5.0		5.00	
830+55	5	11.25	6.3		6.25	
830+93	6	11.25	7.5		7.50	
831+89	4	11.25	5.0		5.00	
832+37	4	11.25	5.0		5.00	
836+33	4	11	4.9	4.89		
837+27	4	11	4.9	4.89		
839+69	4	11	4.9	4.89		
840+73	4	11	4.9	4.89		
			SUBTOTAL EB	19.56	200.97	15.00
			TOTAL EB	19.56	429.72	52.50

MODEL: Patching Schedule 1 [Sheet]
FILE NAME: c:\pw_work\pwidot\colemm\d0927218\D978A45-SHE-Schedules.dgn

USER NAME = Melissa.Cole	DESIGNED -	REVISED -	STATE OF ILLINOIS DEPARTMENT OF TRANSPORTATION
	DRAWN -	REVISED -	
PLOT SCALE = 0.16666633 ' / in.	CHECKED -	REVISED -	
PLOT DATE = 12/4/2023	DATE -	REVISED -	

PATCHING SCHEDULE

SCALE: SHEET OF 9 SHEETS STA. TO STA.

F.A. RTE.	SECTION	COUNTY	TOTAL SHEETS	SHEET NO.
	(6,4)RS-2	FRANKLIN	24	11
		CONTRACT NO.		
	ILLINOIS	FED. AID PROJECT		

PATCHING SCHEDULE

LOCATION	LENGTH	WIDTH	AREA	CLASS C, TY I, 13"	CLASS C, TY II, 13"	CLASS C, TY III, 13"
STATION	FOOT	FOOT	SQ YD	SQYD	SQYD	SQYD
WEST BOUND LANE IL 14						
544+45	8	5.5	4.9	4.89		
553+04	4	11	4.9	4.89		
563+37	4	11	4.9	4.89		
571+59	4	11	4.9	4.89		
579+55	4	11	4.9	4.89		
580+26	4	11	4.9	4.89		
586+77	4	11	4.9	4.89		
593+91	12	11	14.7		14.67	
611+83	4	11	4.9	4.89		
614+80	4	11	4.9	4.89		
615+23	4	11	4.9	4.89		
625+52	4	11	4.9	4.89		
641+68	4	11	4.9	4.89		
646+65	4	11	4.9	4.89		
649+13	4	11	4.9	4.89		
650+64	4	11	4.9	4.89		
654+87	4	11	4.9	4.89		
658+76	4	11	4.9	4.89		
661+15	4	11	4.9	4.89		
664+39	4	11	4.9	4.89		
671+16	4	11	4.9	4.89		
671+69	4	11	4.9	4.89		
672+23	4	11	4.9	4.89		
676+11	4	11	4.9	4.89		
677+12	4	11	4.9	4.89		
679+16	4	11	4.9	4.89		
680+66	4	11	4.9	4.89		
681+52	6	5.5	3.7	3.67		
683+49	4	11	4.9	4.89		
685+70	4	11	4.9	4.89		
703+00	4	11	4.9	4.89		
707+04	7	11	8.6		8.56	
714+09	4	5.5	2.4	2.44		
716+14	4	11	4.9	4.89		
716+63	4	11	4.9	4.89		
719+66	4	11	4.9	4.89		
720+16	4	11	4.9	4.89		
720+66	4	11	4.9	4.89		
725+68	4	11	4.9	4.89		
726+19	4	11	4.9	4.89		
728+20	4	11	4.9	4.89		
728+72	4	11	4.9	4.89		
730+28	4	11	4.9	4.89		
732+24	7	11	8.6		8.56	
738+26	4	11	4.9	4.89		
740+78	5	11	6.1		6.11	
742+32	4	11	4.9	4.89		
747+36	4	11	4.9	4.89		
747+87	4	11	4.9	4.89		
749+39	4	11	4.9	4.89		
			SUBTOTAL WB	221.22	37.89	0.00

PATCHING SCHEDULE

LOCATION	LENGTH	WIDTH	AREA	CLASS C, TY I, 13"	CLASS C, TY II, 13"	CLASS C, TY III, 13"
STATION	FOOT	FOOT	SQ YD	SQYD	SQYD	SQYD
WEST BOUND LANE IL 14						
749+90	4	11	4.9	4.89		
751+93	4	11	4.9	4.89		
752+48	4	11	4.9	4.89		
753+52	4	11	4.9	4.89		
756+93	4	11	4.9	4.89		
766+41	5	11.25	6.3		6.25	
767+39	4	11.25	5.0		5.00	
777+16	4	11.25	5.0		5.00	
778+16	6	11.25	7.5		7.50	
780+15	8	11.25	10.0		10.00	
782+18	4	11.25	5.0		5.00	
782+69	4	11.25	5.0		5.00	
785+90	9	11.25	11.3		11.25	
789+26	4	11.25	5.0		5.00	
790+70	4	11.25	5.0		5.00	
790+90	7	11.25	8.8		8.75	
792+00	4	11.25	5.0		5.00	
794+10	7	11.25	8.8		8.75	
795+00	6	11.25	7.5		7.50	
795+18	25	5.5	15.3			15.28
795+27	4	11.25	5.0		5.00	
795+42	6	11.25	7.5		7.50	
806+04	4	11.25	5.0		5.00	
806+85	4	11.25	5.0		5.00	
810+75	9	11.25	11.3		11.25	
813+68	4	11.25	5.0		5.00	
819+54	4	11.25	5.0		5.00	
820+70	4	11.25	5.0		5.00	
821+12	4	11.25	5.0		5.00	
821+44	6	11.25	7.5		7.50	
822+21	4	11.25	5.0		5.00	
826+07	4	11.25	5.0		5.00	
827+21	4	11.25	5.0		5.00	
830+55	4	11.25	5.0		5.00	
830+93	6	11.25	7.5		7.50	
831+89	4	11.25	5.0		5.00	
832+37	4	11	4.9	4.89		
832+80	6	11	7.3		7.33	
836+33	4	11	4.9	4.89		
837+27	4	11	4.9	4.89		
839+69	4	11	4.9	4.89		
840+73	4	11	4.9	4.89		
843+46	31	5.5	18.9			18.94
843+73	11	5.5	6.7		6.72	
843+99	34	5.5	20.8			20.78
844+26	4	12	5.3		5.33	
			SUBTOTAL WB	48.89	208.14	55.00
			TOTAL WB	270.11	246.03	55.00

MODEL: Patching Schedule 2 [Sheet]
FILE NAME: c:\pw_work\pwidot\colemm\d0927218\D978A45-Sht5-Schedules.dgn

USER NAME = Melissa.Cole	DESIGNED -	REVISED -	STATE OF ILLINOIS DEPARTMENT OF TRANSPORTATION
	DRAWN -	REVISED -	
PLOT SCALE = 0.16666633 ' / in.	CHECKED -	REVISED -	
PLOT DATE = 12/4/2023	DATE -	REVISED -	

PATCHING SCHEDULE

SCALE: | SHEET OF 9 SHEETS | STA. | TO STA.

F.A. RTE.	SECTION	COUNTY	TOTAL SHEETS	SHEET NO.
	(6,4)RS-2	FRANKLIN	24	12
		CONTRACT NO.		
	ILLINOIS	FED. AID PROJECT		

HMA PAVEMENT SCHEDULE

LOCATION STATION TO STATION	TEMP RAMPS	HMA BINDER COURSE (1 1/4")	HMA SURFACE COURSE (1 1/2")	MATERIAL TRANSFER DEVICE	HMA SURFACE REMOVAL, 1 1/2"	HMA SURFACE REMOVAL, 2 1/2"	BITUMINOUS MATERIALS (TACK COAT)	STRIP REFLECTIVE CRACK CONTROL	LONG JOINT SEALANT	CENTER LINE RUMBLE STRIPS 8 INCH
	SQ YD	TON	TON	TON	SQ YD	SQ YD	POUND	FOOT	FOOT	FOOT
FAP 869 (IL 14)										
STA 532+34.20 TO STA 542+04.50	21	169	201	370		2372	1601	1941	971	243
EQ. STA 542+04.50 BK TO STA 540+73.30 AH										
STA 540+73.30 TO STA 542+50.00		31	37	68		432	292	354	177	45
STA 542+50.00 TO STA 565+83.10		405	482	887	5704		3850	4667	2334	584
EQ. STA 565+83.10 BK TO STA 566+96.19 AH										
STA 566+96.19 TO STA 578+72.50	13	205	243	448	2876		1941	2353	1177	295
STA 578+72.50 TO STA 579+37.50	**OMISSION SN 028-2016**									
STA 579+37.50 TO STA 585+00.00	13	98	117	215	1375		929	1125	563	141
EQ. STA 585+00.00 BK TO STA 585+19.37 AH										
STA 585+19.37 TO STA 603+30.00	13	315	374	689	4426		2988	3622	1811	453
STA 603+30.00 TO STA 604+30.00	**OMISSION SN 028-0076**									
STA 604+30.00 TO STA 611+07.68	21	118	140	258		1657	1119	1356	678	170
EQ. STA 611+07.68 BK TO STA 610+95.61 AH										
STA 610+95.61 TO STA 647+10.00		628	747	1375		8836	5964	7229	3615	904
STA 647+10.00 TO STA 666+84.00		343	408	751	4826		3258	3948	1974	494
EQ. STA 666+84.00 BK TO STA 667+00.00 AH										
STA 667+00.00 TO STA 692+80.05		448	533	981	6307		4258	5161	2581	646
EQ. STA 692+80.05 BK TO STA 693+06.54 AH										
STA 693+06.54 TO STA 757+14.82		1113	1324	2437	15665		10574	12817	6409	1603
EQ. STA 757+14.82 BK TO STA 765+74.55 AH										
STA 765+74.55 TO STA 769+14.70	13	60	71	131	832		562	681	341	86
STA 769+14.70 TO STA 772+65.30	**OMISSION SN 028-0020**									
STA 772+65.30 TO STA 816+91.60	13	769	915	1684	10820		7304	8853	4427	1107
EQ. STA 816+91.60 BK TO STA 816+84.50 AH										
STA 816+84.50 TO STA 839+08.47		386	460	846	5437		3670	4448	2224	556
EQ. STA 839+08.47 BK TO STA 839+13.52 AH										
STA 839+13.52 TO STA 844+50.00	13	94	111	205	1312		886	1073	537	135
PROJECT TOTALS	120	5182	6163	11345	59580	13297	49196	59628	29819	7462

PARKING LANES SCHEDULE

LOCATION STATION TO STATION	HMA BINDER COURSE (1 1/4")	HMA SURFACE COURSE (1 1/2")	MATERIAL TRANSFER DEVICE	HMA SURFACE REMOVAL, 2 1/2"	BITUMINOUS MATERIALS (TACK COAT)
	TON	TON	TON	SQ YD	POUND
FAP 869 (IL 14)					
STA 532+34.20 TO STA 537+68.00	64	76	140	890	601
PROJECT TOTALS	64	76	140	890	601

MODEL: Pavement Schedule [Sheet]
FILE NAME: c:\pw_work\pwidot\cole mm\d0927218\D978A45-Sht-Schedules.dgn

USER NAME = Melissa.Cole	DESIGNED -	REVISED -	
	DRAWN -	REVISED -	
PLOT SCALE = 0.16666633 ' / in.	CHECKED -	REVISED -	
PLOT DATE = 12/4/2023	DATE -	REVISED -	

STATE OF ILLINOIS
DEPARTMENT OF TRANSPORTATION

HMA PAVEMENT AND PARKING LANE SCHEDULE

SCALE: SHEET OF 9 SHEETS STA. TO STA.

F.A. RTE.	SECTION	COUNTY	TOTAL SHEETS	SHEET NO.
	(6,4)RS-2	FRANKLIN	24	13
		CONTRACT NO.		
	ILLINOIS	FED. AID PROJECT		

SHOULDER SCHEDULE

LOCATION STATION TO STATION	HMA SHOULDERS (2 3/4")	AGG WEDGE SHOULDER TY B	MATERIAL TRANSFER DEVICE	HMA SURFACE REMOVAL, 1 1/2"	HMA SURFACE REMOVAL, 2 1/2"	BITUMINOUS MATERIALS (TACK COAT)	SHOULDER RUMBLE STRIPS 8 INCH	COMMENTS
	TON	TON	TON	SQ YD	SQ YD	POUND	FOOT	
FAP 869 (IL 14)								
STA 532+34.20 TO STA 537+68.00								No Shoulder Parking Lanes
STA 537+68.00 TO STA 542+04.50								No Shoulder C&G
EQ. STA 542+04.50 BK TO STA 540+73.30 AH								
STA 540+73.30 TO STA 542+50.00								No Shoulder C&G
STA 542+50.00 TO STA 565+83.10	320	54		2074		1400	4667	
EQ. STA 565+83.10 BK TO STA 566+96.19 AH								
STA 566+96.19 TO STA 578+72.50	162	27		1046		706	2353	
STA 578+72.50 TO STA 579+37.50				**OMISSION SN 028-2016**				
STA 579+37.50 TO STA 585+00.00	77	13		500		338	1125	
EQ. STA 585+00.00 BK TO STA 585+19.37 AH								
STA 585+19.37 TO STA 603+30.00	248	42		1610		1087	3622	
STA 603+30.00 TO STA 604+30.00				**OMISSION SN 028-0076**				
STA 604+30.00 TO STA 605+48.00	17	3			105	71	236	
STA 605+48.00 TO STA 608+28.00	39	7			249	168	560	HMA Shoulder LT & RT/AGG Shoulder Rt Only
STA 608+28.00 TO STA 611+07.62	39	7			249	168	560	
EQ. STA 611+07.62 BK TO STA 610+95.61 AH								
STA 610+95.61 TO STA 633+75.00	313	52			2027	1368	4559	
STA 633+75.00 TO STA 636+93.00	44	8			283	191	636	HMA Shoulder LT & RT/AGG Shoulder Rt Only
STA 636+93.00 TO STA 637+35.00	6	1			38	26	84	
STA 637+35.00 TO STA 639+24.00	26	5			168	114	378	HMA Shoulder LT & RT/AGG Shoulder Rt Only
STA 639+24.00 TO STA 643+80.00	63	11			406	274	912	
STA 643+80.00 TO STA 647+10.00	46	8			294	198	660	HMA Shoulder LT & RT/AGG Shoulder Rt Only
STA 647+10.00 TO STA 666+84.40	271	45		1756		1185	3949	
EQ. STA 666+84.40 BK TO STA 667+00.00 AH								
STA 667+00.00 TO STA 692+80.05	354	59		2294		1549	5161	
EQ. STA 692+80.05 BK TO STA 693+06.54 AH								
STA 693+06.54 TO STA 757+14.82	878	146		5697		3845	12817	
EQ. STA 757+14.82 BK TO STA 765+74.55 AH								
STA 765+74.55 TO STA 769+14.70	47	8		303		205	681	
STA 769+14.70 TO STA 772+65.29				**OMISSION SN 028-0020**				
STA 772+65.29 TO STA 816+91.90	606	101		3935		2656	8854	
EQ. STA 816+91.90 BK TO STA 816+84.50 AH								
STA 816+84.50 TO STA 839+08.47	305	51		1977		1335	4448	
EQ. STA 839+08.47 BK TO STA 839+13.52 AH								
STA 839+13.52 TO STA 844+50.00	74	13		477		322	1073	
PROJECT TOTALS	**3935**	**661**	**0**	**21669**	**3819**	**17206**	**57335**	

MODEL: Shoulders [Sheet]
FILE NAME: c:\pw_work\pwidot\cotenmi\d0927218\D978A45-SHE-Schedules.dgn

USER NAME = Melissa.Cole	DESIGNED -	REVISED -	
	DRAWN -	REVISED -	
PLOT SCALE = 0.16666633 ' / in.	CHECKED -	REVISED -	
PLOT DATE = 12/4/2023	DATE -	REVISED -	

STATE OF ILLINOIS
DEPARTMENT OF TRANSPORTATION

SHOULDER SCHEDULE

SCALE: SHEET OF 9 SHEETS STA. TO STA.

F.A.P RTE.	SECTION	COUNTY	TOTAL SHEETS	SHEET NO.
869	(6,4)RS-2	FRANKLIN	24	14

CONTRACT NO. 78A45

ILLINOIS FED. AID PROJECT

PAVEMENT MARKING SCHEDULE

LOCATION STATION TO STATION	PAINT PAVEMENT MARKING			RAISED REFL PAVEMENT MARKER	RAISED REFL PAVEMENT MARKER REMOVAL	COMMENTS
	LINE - 4" WHITE	LINE - 4" YELLOW				
	SOLID	SOLID	SKIP - DASH			
FAP 869 (IL 14)	FOOT	FOOT	FOOT	EACH	EACH	
STA 531+13.50 TO STA 534+41.00	655	655		5	5	DOUBLE YELLOW
STA 534+41.00 TO STA 542+04.50	1527	764	191	10	10	LT SOLID RT DASH
EQ. STA 542+04.50 BK TO STA 540+73.30						
STA 540+73.30 TO STA 544+72.00	797	399	100	5	5	LT SOLID RT DASH
STA 544+72.00 TO STA 548+72.00	800		100	5	5	SKIP DASH
STA 548+72.00 TO STA 560+00.00	2256	1128	282	15	15	LT DASH RT SOLID
STA 560+00.00 TO STA 565+83.10	1166	583	146	8	8	LT SOLID RT DASH
EQ. STA 565+83.10 BK TO STA 566+96.19						
STA 566+96.19 TO STA 569+00.00	408	204	51	3	3	LT SOLID RT DASH
STA 569+00.00 TO STA 585+00.00	3200		400	20	20	SKIP DASH
EQ. STA 585+00.00 BK TO STA 585+19.37						
STA 585+19.37 TO STA 591+00.00	1161		145	8	8	SKIP DASH
STA 591+00.00 TO STA 602+00.00	2200	1100	275	14	14	LT DASH RT SOLID
STA 602+00.00 TO STA 611+07.62	1815	908	227	12	12	LT SOLID RT DASH
EQ. STA 611+07.62 BK TO STA 610+95.61						
STA 610+95.61 TO STA 612+70.00	349	174	44	3	3	LT SOLID RT DASH
STA 612+70.00 TO STA 666+84.40	10829		1354	68	68	SKIP DASH
EQ. STA 666+84.40 BK TO STA 667+00.00						
STA 667+00.00 TO STA 679+00.00	2400		300	15	15	SKIP DASH
STA 679+00.00 TO STA 687+00.00	1600	800	200	10	10	LT DASH RT SOLID
STA 687+00.00 TO STA 692+00.00	1000		125	7	7	SKIP DASH
STA 692+00.00 TO STA 692+80.05	160	80	20	2	2	LT SOLID RT DASH
EQ. STA 692+80.05 BK TO STA 693+06.54						
STA 693+06.54 TO STA 697+90.00	967	483	121	7	7	LT SOLID RT DASH
STA 697+90.00 TO STA 757+14.82	11850		1481	75	75	SKIP DASH
EQ. STA 757+14.82 BK TO STA 765+74.55						
STA 765+74.55 TO STA 816+91.90	10235		1279	64	64	SKIP DASH
EQ. STA 816+91.90 BK TO STA 816+84.50						
STA 816+84.50 TO STA 839+08.47	4448		556	28	28	SKIP DASH
EQ. STA 839+08.47 BK TO STA 839+13.52						
STA 839+13.52 TO STA 844+50.00	1073		134	7	7	SKIP DASH
SUBTOTAL	60896	7278	7530	391	391	
TOTAL	75703			391	391	

MODEL: Pavement Marking [Sheet]
FILE NAME: c:\pw_work\pwidot\cole mm\d0927218\D978A45-SHEE-Schedules.dgn

USER NAME = Melissa.Cole	DESIGNED -	REVISED -	
	DRAWN -	REVISED -	
PLOT SCALE = 0.16666633 ' / in.	CHECKED -	REVISED -	
PLOT DATE = 12/4/2023	DATE -	REVISED -	

STATE OF ILLINOIS
DEPARTMENT OF TRANSPORTATION

PAVEMENT MARKING SCHEDULE

SCALE: SHEET OF 9 SHEETS STA. TO STA.

F.A.P RTE.	SECTION	COUNTY	TOTAL SHEETS	SHEET NO.
869	(6,4)RS-2	FRANKLIN	24	15
		CONTRACT NO. 78A45		
		ILLINOIS FED. AID PROJECT		

TEMPORARY PAVEMENT MARKING SCHEDULE

LOCATION STATION TO STATION	TEMPORARY PAVEMENT MARKING			PAVEMENT MARKING REMOVAL - GRINDING	SHORT TERM PAVEMENT MARKING	SHORT TERM PAVEMENT MARKING REMOVAL
	LINE - 4" WHITE	LINE - 4" YELLOW				
	SOLID	SOLID LT	SKIP - DASH			
FAP 869 (IL 14)	FOOT	FOOT	FOOT	SQ FT	FOOT	SQ FT
STA 531+13.50 TO STA 534+41.00	655	655		437	99	33
STA 534+41.00 TO STA 542+04.50	1527	764	191	828	231	77
EQ. STA 542+04.50 BK TO STA 540+73.30						
STA 540+73.30 TO STA 544+72.00	797	399	100	432	120	40
STA 544+72.00 TO STA 548+72.00	800		100	300	120	40
STA 548+72.00 TO STA 560+00.00	2256	1128	282	1222	339	113
STA 560+00.00 TO STA 565+83.10	1166	583	146	632	177	59
EQ. STA 565+83.10 BK TO STA 566+96.19						
STA 566+96.19 TO STA 569+00.00	408	204	51	221	63	21
STA 569+00.00 TO STA 585+00.00	3200		400	1200	480	160
EQ. STA 585+00.00 BK TO STA 585+19.37						
STA 585+19.37 TO STA 591+00.00	1161		145	436	177	59
STA 591+00.00 TO STA 602+00.00	2200	1100	275	1192	330	110
STA 602+00.00 TO STA 611+07.62	1815	908	227	984	273	91
EQ. STA 611+07.62 BK TO STA 610+95.61						
STA 610+95.61 TO STA 612+70.00	349	174	44	189	54	18
STA 612+70.00 TO STA 666+84.40	10829		1354	4061	1626	542
EQ. STA 666+84.40 BK TO STA 667+00.00		0				
STA 667+00.00 TO STA 679+00.00	2400		300	900	360	120
STA 679+00.00 TO STA 687+00.00	1600	800	200	867	240	80
STA 687+00.00 TO STA 692+00.00	1000		125	375	150	50
STA 692+00.00 TO STA 692+80.05	160	80	20	87	27	9
EQ. STA 692+80.05 BK TO STA 693+06.54						
STA 693+06.54 TO STA 697+90.00	967	483	121	524	147	49
STA 697+90.00 TO STA 757+14.82	11850		1481	4444	1779	593
EQ. STA 757+14.82 BK TO STA 765+74.55						
STA 765+74.55 TO STA 816+91.90	10235		1279	3839	1536	512
EQ. STA 816+91.90 BK TO STA 816+84.50						
STA 816+84.50 TO STA 839+08.47	4448		556	1668	669	223
EQ. STA 839+08.47 BK TO STA 839+13.52						
STA 839+13.52 TO STA 844+50.00	1073		134	403	162	54
SUBTOTAL	60896	7278	7530	25241	9159	3053
TOTAL	75703			25241	9159	3053

MODEL: Pavement Marking-1 [Sheet]
FILE NAME: c:\pw_work\pwidot\cole\mm\d0927218\D978A45-Sht-Schedules.dgn

USER NAME = Melissa.Cole	DESIGNED -	REVISED -	
	DRAWN -	REVISED -	
PLOT SCALE = 0.16666633 ' / in.	CHECKED -	REVISED -	
PLOT DATE = 12/4/2023	DATE -	REVISED -	

STATE OF ILLINOIS
DEPARTMENT OF TRANSPORTATION

TEMPORARY PAVEMENT MARKING SCHEDULE

SCALE: SHEET OF 9 SHEETS STA. TO STA.

F.A.P RTE.	SECTION	COUNTY	TOTAL SHEETS	SHEET NO.
869	(6,4)RS-2	FRANKLIN	24	16

CONTRACT NO. 78A45

ILLINOIS FED. AID PROJECT

GUARDRAIL SCHEDULE

LOCATION STATION TO STATION	STEEL PLATE BEAM GUARDRAIL TYPE A, 6 FOOT POSTS	GUARDRAIL REFLECTORS, TYPE A	GUARDRAIL REMOVAL	TRAFFIC BARRIER TERMINAL, TYPE 6	TRAFFIC BARRIER TERMINAL, TYPE 1 (SPECIAL) TANGENT	TERMINAL MARKERS - DIRECT APPLIED
	FOOT	EACH	FOOT	EACH	EACH	EACH
SN 028-0020						
NW QUAD	100	4	130	1	1	1
SW QUAD	100	4	130	1	1	1
NE QUAD	100	4	130	1	1	1
SE QUAD	100	4	130	1	1	1
TOTAL	**400**	**16**	**520**	**4**	**4**	**4**

MODEL: Schedule_7 [Sheet]
FILE NAME: c:\pw_work\pwidot\colemmd\d927218\D978A45-SHE-Schedules.dgn

USER NAME = Melissa.Cole	DESIGNED -	REVISED -	
	DRAWN -	REVISED -	
PLOT SCALE = 0.16666633 ' / in.	CHECKED -	REVISED -	
PLOT DATE = 12/4/2023	DATE -	REVISED -	

STATE OF ILLINOIS
DEPARTMENT OF TRANSPORTATION

GUARDRAIL SCHEDULE

SCALE: SHEET OF 9 SHEETS STA. TO STA.

F.A.P RTE.	SECTION	COUNTY	TOTAL SHEETS	SHEET NO.
869	(6,4)RS-2	FRANKLIN	24	17

CONTRACT NO. 78A45

ILLINOIS FED. AID PROJECT

SIDE ROAD SCHEDULE

LOCATION: FAP 869 (IL 14)			EXIST. SURFACE	EOP WIDTH	WIDTH AT 15' OFFSET	ROADWAY AREA	INCIDENTAL HMA SURFACING	BIT. MAT. (TACK COAT)	HMA SURFACE REMOVAL - BUTT JOINT	TEMPORARY RAMP
			FOR INFORMATIONAL PURPOSE ONLY							
				FOOT	FOOT	SQ YD	TON	POUND	SQ YD	SQ YD
SIDE ROADS										
RT	SIMON DRIVE	548+72	Bit.	45	30	62.5	6	29	32	21
RT	URBAIN RD	584+50	O & C	51	28	65.8	12	30		24
LT	URBAIN RD	584+50	O & C	43	26	57.5	10	26		20
RT	MINE ST	669+50	O & C	46	20	55.0	10	25		22
RT	WATER RD	683+85	O & C	55	40	79.2	14	36		26
LT	WATER RD	683+85	O & C	40	20	50.0	9	23		19
LT	REND CITY RD	741+57	PCC	168	82	208.3	18	94	105	78
RT	EAKIN GROVE RD	816+85	O & C	59	29	73.3	13	33		28
LT	N COURT ST	843+50	Bit.	23	22	37.5	4	17	19	11
TOTALS							96	313	156	249

MODEL: Entrance Schedules [Sheet]
FILE NAME: c:\pw_work\pwidot\cdemm\d0927218\D978A45-SHTE-Schedules.dgn

USER NAME = Melissa.Cole	DESIGNED -	REVISED -	STATE OF ILLINOIS DEPARTMENT OF TRANSPORTATION
	DRAWN -	REVISED -	
PLOT SCALE = 0.16666633 ' / in.	CHECKED -	REVISED -	
PLOT DATE = 12/4/2023	DATE -	REVISED -	

SIDEROAD SCHEDULE

SCALE: SHEET OF 9 SHEETS STA. TO STA.

F.A.P RTE.	SECTION	COUNTY	TOTAL SHEETS	SHEET NO.
869	(6,4)RS-2	FRANKLIN	24	18
		CONTRACT NO. 78A45		
		ILLINOIS FED. AID PROJECT		

ENTRANCE SCHEDULE

LOCATION: FAP 869 (IL 14)		ENTRANCE TYPE	EXIST. SURFACE	EOS WIDTH	WIDTH AT 4' OFFSET	ROADWAY AREA	INCIDENTAL HMA SURFACING	BIT. MAT. (TACK COAT)	AGG WEDGE SHOULDER, TYPE B
			FOR INFORMATIONAL PURPOSE ONLY						
			TYPE	(FT)	(FT)	(SQ YD)	TON	POUND	TON
ENTRANCES									
548+65	RT	PE	AGG	55	46	22.4			2
551+72	LT	PE	AGG	60	32	20.4			2
556+46	LT	PE	AGG	72	54	28.0			2
562+18	LT	PE	AGG	36	30	14.7			1
570+57	LT	PE	AGG	31	30	13.6			1
647+14	LT	FE	AGG	22	16	8.4			1
655+54	LT	FE	AGG	13	13	5.8			1
657+95	LT	PE	HMA	42	27	15.3	1	4	
666+30	LT	PE	AGG	75	55	28.9			2
669+50	LT	PE	AGG	27	26	11.8			1
671+11	LT	PE	AGG	29	22	11.3			1
690+32	LT	PE	AGG	34	28	13.8			1
704+75	LT	PE	AGG	25	24	10.9			1
712+50	LT	PE	HMA	49	39	19.6	1	5	
741+37	RT	PE	AGG	25	22	10.4			1
798+74	RT	PE	AGG	32	30	13.8			1
798+74	LT	PE	AGG	24	23	10.4			1
802+90	LT	PE	AGG	22	22	9.8			1
803+34	RT	PE	AGG	22	22	9.8			1
804+63	LT	PE	AGG	27	25	11.6			1
807+54	RT	PE	AGG	25	25	11.1			1
808+84	LT	PE	AGG	43	25	15.1			1
810+24	LT	FE	AGG	15	15	6.7			1
812+28	LT	PE	AGG	30	27	12.7			1
814+15	LT	PE	AGG	27	25	11.6			1
816+69	LT	PE	AGG	46	33	17.6			1
818+32	LT	CE	PCC	50	45	26.4	2	5	
821+14	LT	PE	AGG	46	40	23.9			2
822+73	LT	CE	HMA	45	40	23.6	2	5	
825+09	RT	PE	AGG	29	22	11.3			1
826+64	LT	PE	AGG	26	22	10.7			1
831+19	RT	PE	AGG	38	34	16.0			1
833+30	LT	CE	HMA	39	34	16.2	1	4	
836+87	LT	PE	AGG	22	22	9.8			1
837+64	LT	PE	AGG	22	22	9.8			1
838+33	RT	PE	AGG	25	22	10.4			1
838+99	LT	CE	PCC	43	38	22.5	2	5	
842+41	RT	CE	PCC	60	55	25.6	2	6	
			TOTAL				10	30	22

MODEL: Entrance Schedule [Sheet]
FILE NAME: c:\pw_work\pwidot\coleminu\d0927218\D978A45-SHE-Schedules.dgn

USER NAME = Melissa.Cole	DESIGNED -	REVISED -
	DRAWN -	REVISED -
PLOT SCALE = 0.16666633 ' / in.	CHECKED -	REVISED -
PLOT DATE = 12/4/2023	DATE -	REVISED -

STATE OF ILLINOIS
DEPARTMENT OF TRANSPORTATION

ENTRANCE SCHEDULE

SCALE: SHEET OF 9 SHEETS STA. TO STA.

F.A.P RTE.	SECTION	COUNTY	TOTAL SHEETS	SHEET NO.
869	(6,4)RS-2	FRANKLIN	24	19

CONTRACT NO. 78A45

ILLINOIS FED. AID PROJECT

ILLINOIS STANDARD
ROUGH GROOVED SURFACE SIGN

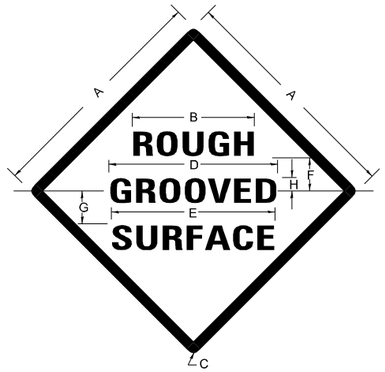

COLORS

LEGEND AND BORDER- BLACK NON-REFLECTORIZED
BACKGROUND- ORANGE REFLECTORIZED

SIGN SIZE	DIMENSIONS							
	A	B	C	D	E	F	G	H
48X48	48.0	24.1	3.0	34.0	33.0	6.0	13.0	3.5

SIGN SIZE	SERIES LINES			MAR-GIN	BOR-DER	BLANK STD.
	1	2	3			
48X48	7C	7C	7C	0.8	1.2	B4-48D

ALL DIMENSIONS IN INCHES

NOTES

PRIOR TO ALLOWING TRAFFIC ON ANY PORTION OF THE ROADWAY THAT HAS BEEN COLDMILLED, THE CONTRACTOR SHALL HAVE ERECTED "ROUGH GROOVED SURFACE" SIGNS THAT CONFORM TO THE ABOVE DETAILS. A MINIMUM OF ONE SIGN AT EACH END OF THE IMPROVEMENT WILL BE REQUIRED. THE CONTRACTOR SHALL MAINTAIN THE "ROUGH GROOVED SURFACE" SIGNS UNTIL THE COLDMILLED SURFACE IS COVERED WITH LEVELING BINDER OR SURFACE COURSE.

IF AT ANY TIME THE SIGNS ARE IN PLACE BUT NOT APPLICABLE, THEY SHALL BE TURNED FROM THE VIEW OF MOTORISTS OR COVERED AS DIRECTED BY THE ENGINEER.

THE COST OF FURNISHING, ERECTING, MAINTAINING, AND REMOVING THE REQUIRED SIGNS SHALL BE INCLUDED IN THE CONTRACT.

DRAWN	02-15-89
REVISED	03-27-08
REVISED	10-21-21
REVISED	05-27-22

STD. 9-23

UNEVEN LANES SIGN
W8–11 (48" X 48")

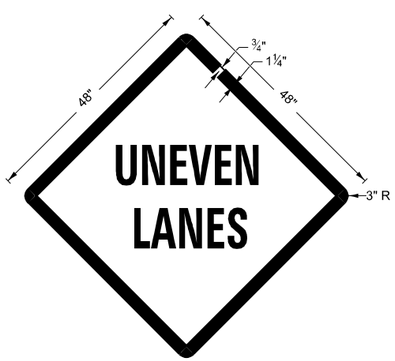

COLORS:

LEGEND AND BORDER - BLACK NON-REFLECTORIZED
BACKGROUND - ORANGE REFLECTORIZED

NOTE: PRIOR TO ALLOWING TRAFFIC ON ANY PORTION OF THE ROADWAY THAT HAS BEEN COLDMILLED OR BEFORE RESURFACING OPERATIONS BEGIN, THE CONTRACTOR SHALL HAVE ERECTED "UNEVEN PAVEMENT" SIGNS THAT CONFORM TO THE ABOVE DETAILS. A MINIMUM OF ONE SIGN AT EACH END OF THE IMPROVEMENT WILL BE REQUIRED. THE CONTRACTOR SHALL MAINTAIN THE "UNEVEN PAVEMENT" SIGNS UNTIL THE RESURFACING OPERATIONS ARE COMPLETED.

IF AT ANY TIME THE SIGNS ARE IN PLACE BUT NOT APPLICABLE, THEY SHALL BE TURNED FROM THE VIEW OF MOTORISTS OR COVERED AS DIRECTED BY THE ENGINEER.

THE COST OF FURNISHING, ERECTING, MAINTAINING, AND REMOVING THE REQUIRED SIGNS SHALL BE INCLUDED IN THE CONTRACT.

DRAWN	02-15-89
REVISED	05-08-08
REVISED	10-21-21
REVISED	05-27-22

STD. 9-24

TEMPORARY HOT–MIX ASPHALT TRANSITIONS

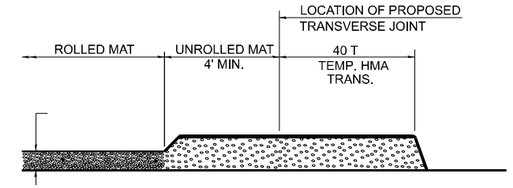

STEP I

1. PLACE HOT-MIX ASPHALT MAT, LENGTH 40 TIMES THE THICKNESS OF THE MAT BEING PLACED PAST THE PROPOSED TRANSVERSE JOINT LOCATION USING NORMAL OPERATING PROCEDURES.
2. EXTREME CARE SHOULD BE TAKEN TO MAINTAIN ENOUGH MATERIAL IN FRONT OF THE SCREED TO MAINTAIN REQUIRED PAVING DEPTH.

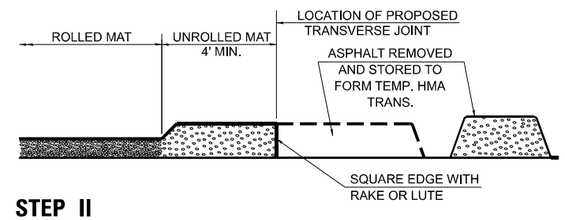

STEP II

1. MOVE THE PAVER OUT OF THE WAY AND REMOVE THE ASPHALT FROM THE AREA OF THE PROPOSED TEMPORARY HOT-MIX ASPHALT TRANSITION.
2. SQUARE UP THE END OF THE MAT WITH A RAKE OR LUTE.
3. NOTE THAT THE MAT WITHIN 4' OF THE END OF JOINT IS NOT TO BE ROLLED AT THIS TIME.

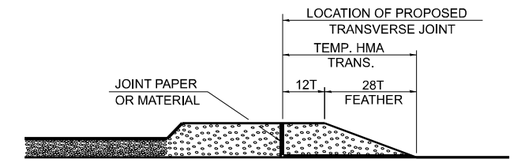

STEP III

1. JOINT PAPER OR OTHER PRESELECTED JOINT MATERIAL IS THEN PLACED IN THE CLEARED AREA AND THE EXCESS ASPHALT USED TO HAND FORM A TRANSITION TO THE DIMENSIONS SHOWN ABOVE.
2. NOTE THAT IN CONSTRUCTING THE TRANSITION, THE MAT DEPTH IS CONTINUED AS PART OF THE TRANSITION BEFORE FORMING THE FEATHER.

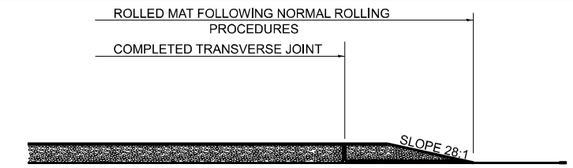

STEP IV

1. COMPLETE TEMPORARY TRANSITION BY ROLLING.
2. TO RESUME PAVING, AT THE JOINT, REMOVE TEMPORARY TRANSITION AND DISPOSE OF THE MATERIAL ACCORDING TO ART. 202.03 OF THE STD. SPECS. (COST INCLUDED IN THE CONTRACT).
3. CONSTRUCTING THE TEMPORARY TRANSITIONS WILL NOT BE PAID FOR SEPARATELY IN ACCORDANCE WITH ARTICLE 406.14 OF THE STANDARD SPECIFICATIONS.

DRAWN	02-15-89
REVISED	01-09-07
REVISED	10-21-21
REVISED	05-26-22

STD. 9-18

MODEL: Details-3 [Sheet]
FILE NAME: c:\pw_work\pwidot\cotemm\d0927218\D978A45-ShtS-DistrictStds.dgn

USER NAME = Melissa.Cole	DESIGNED -	REVISED -	STATE OF ILLINOIS DEPARTMENT OF TRANSPORTATION
	DRAWN -	REVISED -	
PLOT SCALE = 0.16666633 ' / in.	CHECKED -	REVISED -	
PLOT DATE = 12/4/2023	DATE -	REVISED -	

ROUGH GROOVED SURFACE, UNEVEN LANES AND TEMPORARY HMA TRANSITIONS DETAILS

SCALE: SHEET OF 5 SHEETS STA. TO STA.

F.A.P RTE.	SECTION	COUNTY	TOTAL SHEETS	SHEET NO.
869	(6,4)RS-2	FRANKLIN	24	20

CONTRACT NO. 78A45

ILLINOIS FED. AID PROJECT

MILLING TRANSITION DETAIL

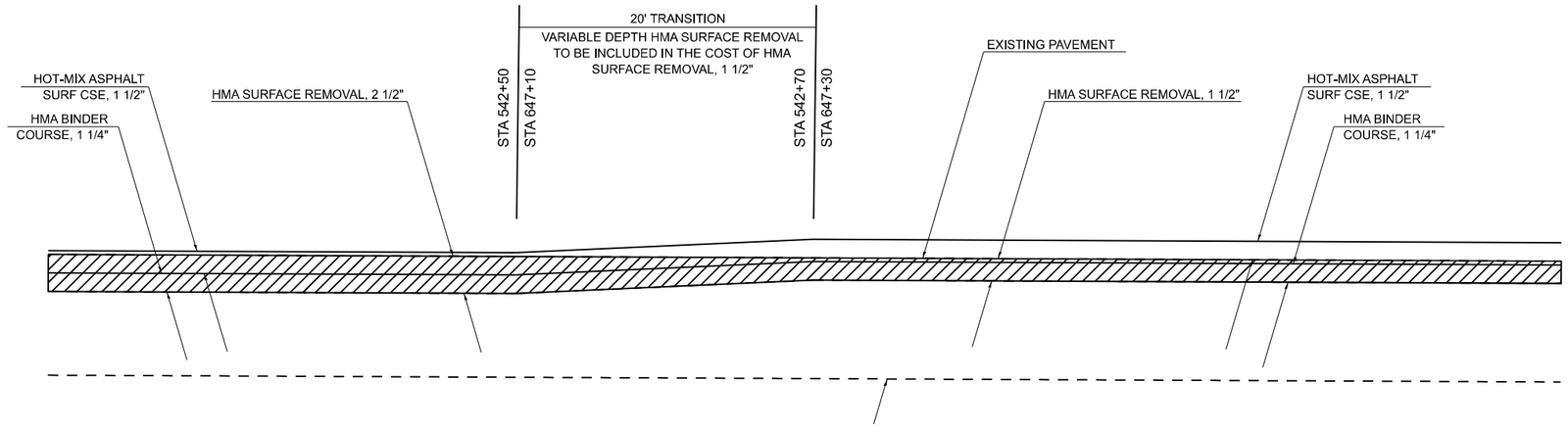

CENTERLINE RUMBLE STRIP DETAIL

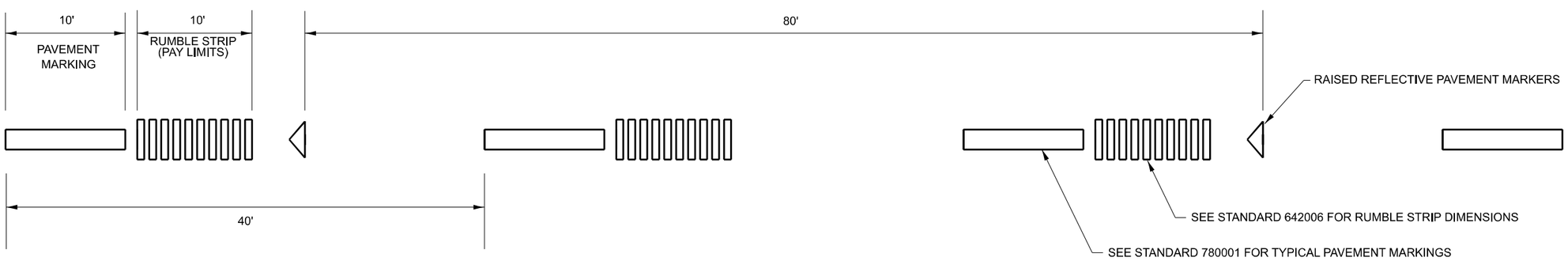

DRAWN	01-08-19
REVISED	10-21-21
REVISED	05-26-22
REVISED	

STD. 9-17

MODEL: Details-4 [Sheet]
FILE NAME: c:\pw_work\pwidot\cole\mm\d0927218\D978A45-Sht5-DistrictStds.dgn

USER NAME = Melissa.Cole	DESIGNED -	REVISED -	STATE OF ILLINOIS DEPARTMENT OF TRANSPORTATION
	DRAWN -	REVISED -	
PLOT SCALE = 0.16666633 ' / in.	CHECKED -	REVISED -	
PLOT DATE = 12/4/2023	DATE -	REVISED -	

MILLING TRANSITION AND CENTERLINE RUMBLE STRIP DETAILS

SCALE: SHEET OF 5 SHEETS STA. TO STA.

F.A.P RTE.	SECTION	COUNTY	TOTAL SHEETS	SHEET NO.
869	(6,4)RS-2	FRANKLIN	24	21
		CONTRACT NO. 78A45		
		ILLINOIS FED. AID PROJECT		

WINGWALL MODIFICATION (SN 028-0020)
(2 EAST END AND 2 WEST END)

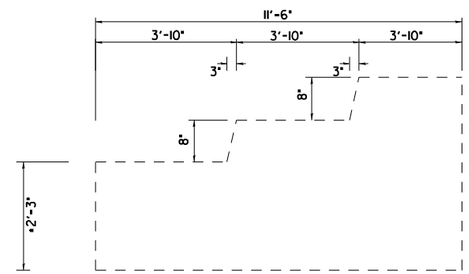

INSIDE ELEVATION (EXISTING)

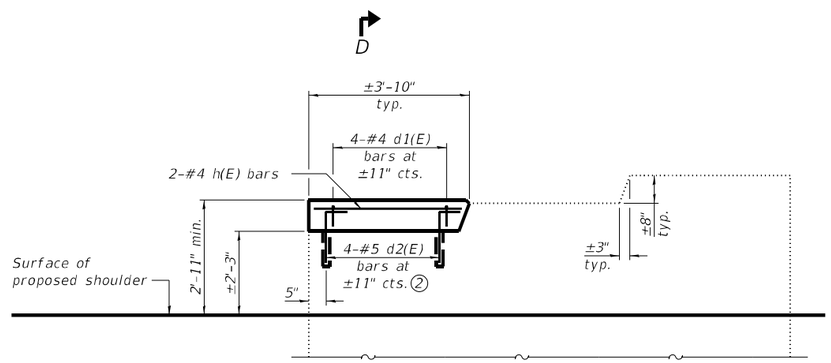

WINGWALL ELEVATION

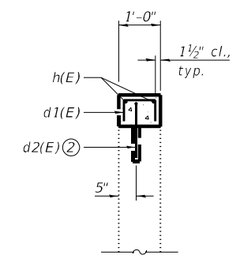

SECTION D-D

BILL OF MATERIAL

Bar	No.	Size	Length	Shape
d1(E)	16	#4	1'-7"	⊓
d2(E)	16	#5	1'-11"	⅂
h(E)	8	#4	3'-6"	———
Concrete Superstructure			Cu. Yd.	0.4
Reinforcement Bars, Epoxy Coated			Pound	69

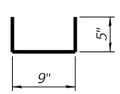

BAR d1(E)

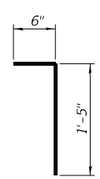

BAR d2(E)

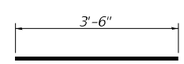

BAR h(E)

NOTES:

① ELEVATIONS ARE BASED ON EXISTING PLANS AND ARE PROVIDED AS A REFERENCE POINT. ACTUAL ELEVATIONS AND DIMENSIONS IN THE FIELD MAY VARY.

② EPOXY GROUT D2(E) BARS IN 9" MIN. DRILLED HOLES ACCORDING TO SECTION 584 OF THE STANDARD SPECIFICATIONS. TRIM BARS TO FIT BEFORE GROUTING.

③ BARS DESIGNATED (E) SHALL BE EPOXY COATED.

BUTT JOINT WITH MILLING

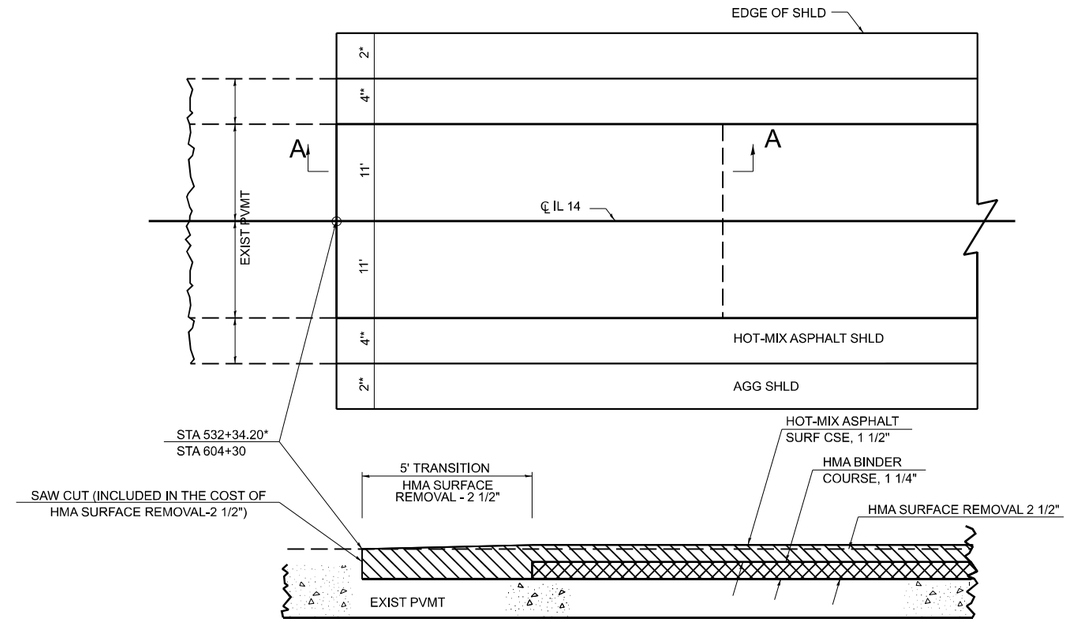

SECTION A–A

*PARKING LANES (SEE TYPICAL SECTION)

BUTT JOINT WITH MILLING

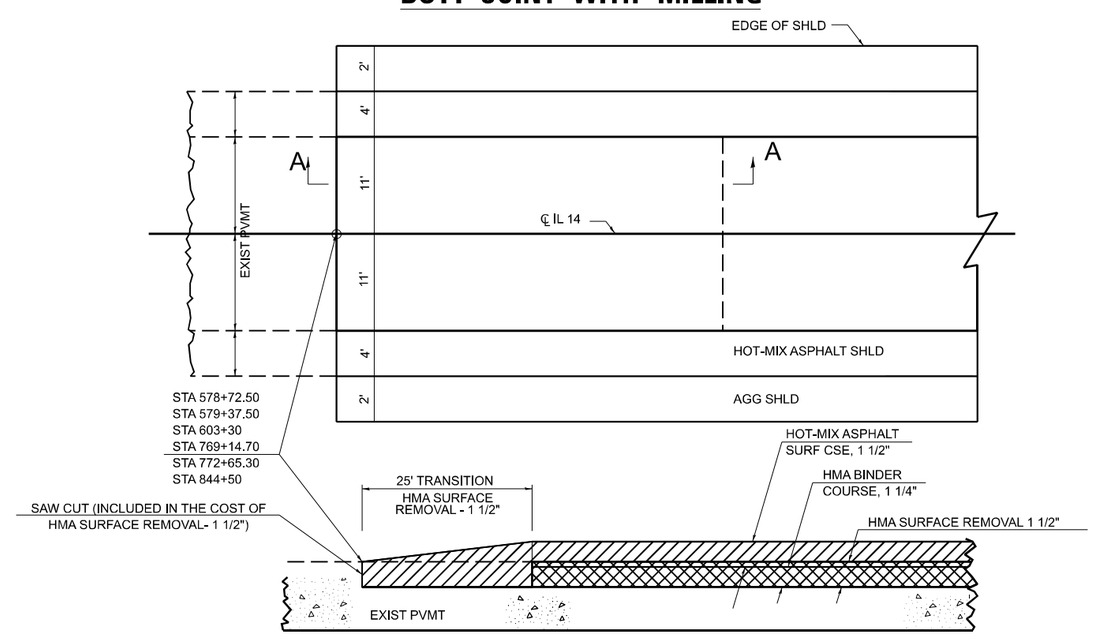

SECTION A–A

MODEL: Entrance Details [Sheet]
FILE NAME: c:\pw_work\pwidot\cole\mnl\d927218\D978A45-SHS-DistrictStds.dgn

USER NAME = Melissa.Cole	DESIGNED -	REVISED -	
	DRAWN -	REVISED -	
PLOT SCALE = 0.16666633 ' / in.	CHECKED -	REVISED -	
PLOT DATE = 12/4/2023	DATE -	REVISED -	

STATE OF ILLINOIS
DEPARTMENT OF TRANSPORTATION

BUTT JOINT MILLING DETAIL

SCALE: | SHEET OF 5 SHEETS | STA. TO STA.

F.A.P RTE.	SECTION	COUNTY	TOTAL SHEETS	SHEET NO.
869	(6,4)RS-2	FRANKLIN	24	23
		CONTRACT NO. 78A45		
		ILLINOIS	FED. AID PROJECT	

SIDEROAD AND ENTRANCE DETAIL

EX. OIL & CHIP SIDEROAD

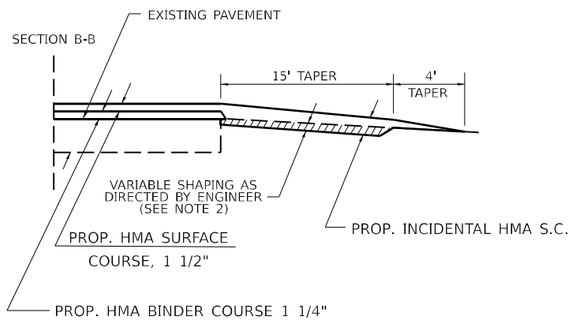

EX. HMA OR PCC SIDEROADS WITH BUTT JOINT

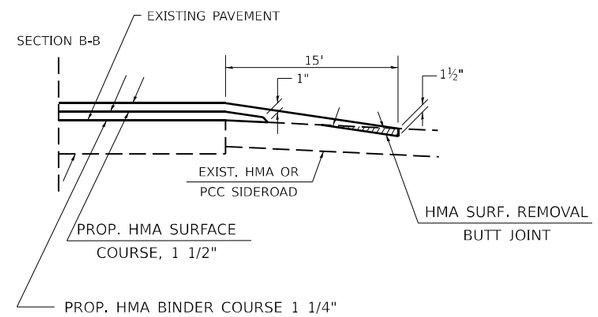

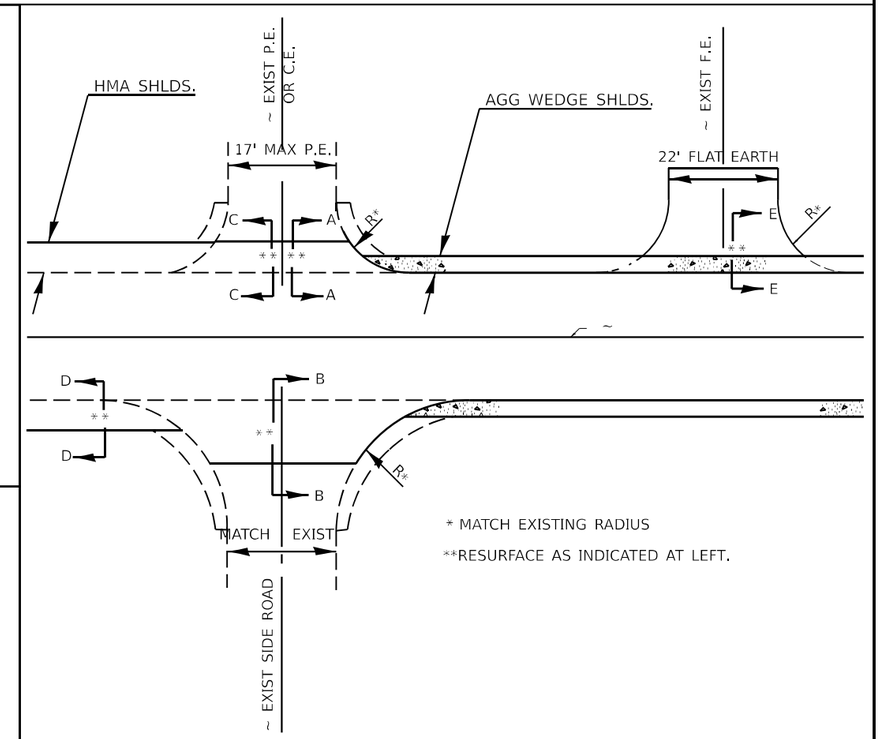

HMA, PCC, OR OIL & CHIP PRIVATE OR COMMERCIAL ENTRANCE (HMA SHLD.)

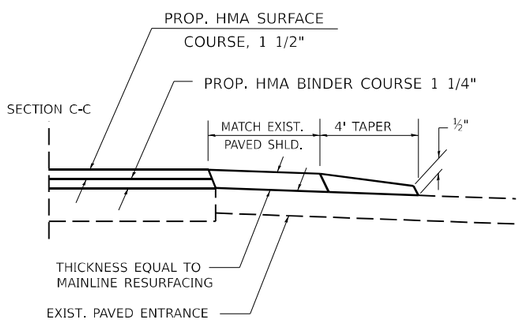

AGG. PRIVATE OR COMMERCIAL ENTRANCE (HMA SHLD.)

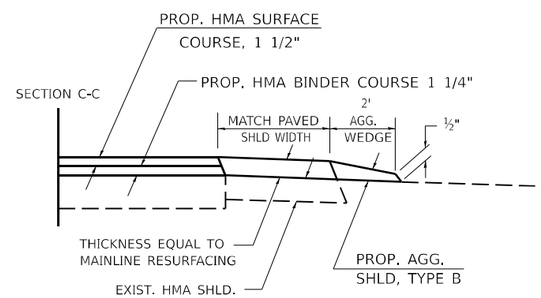

AGG. OR EARTH FIELD ENTRANCE

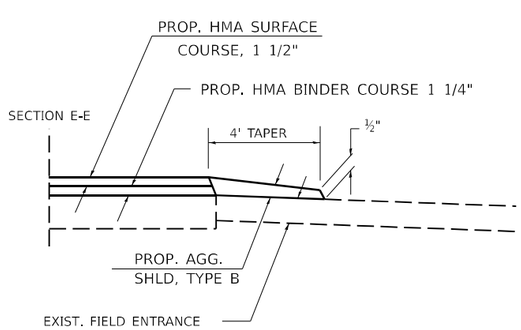

NOTES

1. IF EXISTING SUBBASE IS INADEQUATE, AS DETERMINED BY THE ENGINEER, THE SIDE ROADS SHALL BE CORED OUT AND AGGREGATE SUBBASE, TYPE B SHALL BE PLACED FOR BASE. THE COST OF CORING OUT THE SIDE ROAD AND ANY AGGREGATE BASE COURSE SHALL BE PAID FOR AS SPECIFIED IN ART. 109.04 OF THE STANDARD SPECIFICATIONS FOR ROAD AND BRIDGE CONSTRUCTION. IF EXISTING SUBBASE IS DETERMINED TO BE ADEQUATE, THE PREPARATION OF THE BASE SHALL BE CONSTRUCTED ACCORDING TO ARTICLE 406.09.

2. VARIABLE SHAPING IS INCLUDED IN THE COST OF INCIDENTAL HOT-MIX ASPHALT SURFACE.