077

03-08-2019 LETTING ITEM 077

ESCA PROJECT NO. 1259.09

F.A.I. RTE.	SECTION	COUNTY	TOTAL SHEETS	SHEET NO.
57	(77-1-3)HB-2	PULASKI	92	1
	ILLINOIS	CONTRACT NO. 78454		

FOR INDEX OF SHEETS, SEE SHEET NO. 2

FOR SUMMARY OF QUANTITIES, SEE SHEETS 4–11

STATE OF ILLINOIS
DEPARTMENT OF TRANSPORTATION

PROPOSED HIGHWAY PLANS

FAI ROUTE 57 (I–57)
SECTION (77–1–3)HB–2
PROJECT NHPP–X4EI(497)
BRIDGE REPLACEMENT
FAS 938 (CH 7) OVER FAI ROUTE 57
PULASKI COUNTY

C–99–019–15

D–99–014–15

LOCATION OF SECTION INDICATED THUS:–

TRAFFIC DATA

SN 077–0026

FAS 938 (CH 7)

FUNCTIONAL CLASSIFICATION:	MAJOR COLLECTOR
ADT:	1,860 (2019)
PV:	95.4%
TRUCKS:	4.6%
DESIGN SPEED:	55 MPH
POSTED SPEED:	55 MPH

I–57 (FAI 57)

FUNCTIONAL CLASSIFICATION:	INTERSTATE
ADT (TWO WAY):	13,070 (2019)
PV:	54%
TRUCKS:	46%
DESIGN SPEED:	70 MPH
POSTED SPEED:	70 MPH

TOWNSHIP

ULLIN PRECINCT

FAS 938 (CH 7) OVER FAI ROUTE 57
EXISTING STRUCTURE NO. 077-0026
STATION 227+71.90 FAI 57 =
STATION 77+50.30 FAS 938 (CH 7)
PROPOSED STRUCTURE NO. 077-0041
STATION 227+71.90 FAI 57 =
STATION 77+50.30 FAS 938 (CH 7)
TWO-SPAN W36 STEEL BEAM BRIDGE
196'-11" BK TO BK ABUTMENTS
SKEWED 6°-52'-40" RIGHT FORWARD

N

R1W 3RD PM R1E

T14S

IMPROVEMENTS BEGIN
STA 73+10

FAS 938 (CH 7)

IMPROVEMENTS END
STA 81+75

FAI ROUTE 57 (I-57)

LOCATION MAP

APPROXIMATE SCALE

0 1 2 3 4 5 6 MILES

0 5000 10000 15000 20000 25000 30000 FEET

DESIGN DESIGNATION : 160(39) MAJOR COLLECTOR 4.59 (PCC–20)

COORDINATE SYSTEM : NAD 1983 STATE PLANE ILLINOIS
EAST FIPS 1201 FEET (HORIZONTAL)
NAVD88 (VERTICAL)

POSTED SPEED : 55 MPH

J.U.L.I.E.
JOINT UTILITY LOCATION INFORMATION FOR EXCAVATION
1–800–892–0123
OR 811

ERIC L. HENKEL
54486
LICENSED PROFESSIONAL ENGINEER OF STATE OF ILLINOIS

EXPIRES 11-30-18

SIGNATURE

11–30–18
DATE

PROJECT ENGINEER: DAVID PICHE
PROJECT DESIGNER: ESCA CONSULTANTS, INC.

CONTRACT NO. 78454

GROSS LENGTH = 865.00 FT. = 0.164 MILES
NET LENGTH = 865.00 FT. = 0.164 MILES

ESCA CONSULTANTS, INC.

ESCA JOB NO. 1259.09

STATE OF ILLINOIS
DEPARTMENT OF TRANSPORTATION

SUBMITTED Dec. 10 20 18
Jeffrey L. Keirn
REGION FIVE ENGINEER

Feb 1 20 19
ENGINEER OF DESIGN AND ENVIRONMENT

Feb 1 20 19
Paul E. Loftus
DIRECTOR OF HIGHWAYS PROJECT IMPLEMENTATION

PRINTED BY THE AUTHORITY OF THE STATE OF ILLINOIS

INDEX OF SHEETS

LIST OF ILLINOIS DOT HIGHWAY STANDARDS

STANDARD NO.	DESCRIPTION
000001-07	STANDARD SYMBOLS, ABBREVIATIONS AND PATTERNS
001001-02	AREAS OF REINFORCEMENT BARS
001006	DECIMAL OF AN INCH AND OF A FOOT
280001-07	TEMPORARY EROSION CONTROL SYSTEMS
420001-09	PAVEMENT JOINTS
420101-06	24' (7.2M) JOINTED PCC PAVEMENT
420401-13	PAVEMENT CONNECTOR (PCC) FOR BRIDGE APPROACH SLAB
420701-03	PAVEMENT WELDED WIRE REINFORCEMENT
442101-09	CLASS B PATCHES
515001-03	NAME PLATE FOR BRIDGES
542401-03	METAL FLARED END SECTION FOR PIPE CULVERTS
601101-02	CONCRETE HEADWALL FOR PIPE UNDERDRAINS
606001-07	CONCRETE CURB TYPE B AND COMBINATION CONCRETE CURB AND GUTTER
610001-08	SHOULDER INLET WITH CURB
630001-12	STEEL PLATE BEAM GUARDRAIL
630201-07	PCC/HMA STABILIZATION AT STEEL PLATE BEAM GUARDRAIL
630301-09	SHOULDER WIDENING FOR TYPE 1 (SPECIAL) GUARDRAIL TERMINALS
631011-10	TRAFFIC BARRIER TERMINAL, TYPE 2
631031-15	TRAFFIC BARRIER TERMINAL, TYPE 6
631051-03	TRAFFIC BARRIER TERMINAL, TYPE 11
635001-02	DELINEATORS
643001-02	SAND MODULE IMPACT ATTENUATORS
701001-02	OFF-RD OPERATIONS, 2L, 2W, MORE THAN 15' (4.5m) AWAY
701006-05	OFF-RD OPERATIONS, 2L, 2W, 15' (4.5m) TO 24" (600mm) FROM PAVEMENT EDGE
701011-04	OFF-RD MOVING OPERATIONS, 2L, 2W, DAY ONLY
701101-05	OFF-RD OPERATIONS, MULTILANE, 15' (4.5m) TO 24" (600mm) FROM PAVEMENT EDGE
701106-02	OFF-RD OPERATIONS, MULTILANE, MORE THAN 15' (4.5m) AWAY
701201-05	LANE CLOSURE, 2L, 2W, DAY ONLY, FOR SPEEDS ≥ 45 MPH
701206-05	LANE CLOSURE, 2L, 2W, NIGHT ONLY, FOR SPEEDS ≥ 45 MPH
701301-04	LANE CLOSURE, 2L, 2W, SHORT TIME OPERATIONS
701311-03	LANE CLOSURE, 2L, 2W MOVING OPERATIONS - DAY ONLY
701321-17	LANE CLOSURE, 2L, 2W, BRIDGE REPAIR WITH BARRIER
701326-04	LANE CLOSURE, 2L, 2S, PAVEMENT WIDENING, FOR SPEEDS ≥ 45 MPH
701400-09	APPROACH TO LANE CLOSURE, FREEWAY/EXPRESSWAY
701401-12	LANE CLOSURE, FREEWAY/EXPRESSWAY
701406-12	LANE CLOSURE, FREEWAY/EXPRESSWAY, DAY OPERATIONS ONLY
701411-09	LANE CLOSURE, MULTILANE, AT ENTRACE OR EXIT RAMP, FOR SPEEDS ≥ 45 MPH
701426-09	LANE CLOSURE, MULTILANE, INTERMITTENT OR MOVING OPER., FOR SPEEDS ≥ 45 MPH
701901-08	TRAFFIC CONTROL DEVICES
704001-08	TEMPORARY CONCRETE BARRIER
720001-01	SIGN PANEL MOUNTING DETAILS
720006-04	SIGN PANEL ERECTION DETAILS
720011-01	METAL POSTS FOR SIGNS, MARKERS & DELINEATORS
725001-01	OBJECT AND TERMINAL MARKERS
780001-05	TYPICAL PAVEMENT MARKINGS
782006	GUARDRAIL AND BARRIER WALL REFLECTOR MOUNTING DETAILS

STATE OF ILLINOIS
DEPARTMENT OF TRANSPORTATION

PREPARED BY: _____
DISTRICT STUDIES & PLANS ENGINEER

EXAMINED BY: _____
DISTRICT LAND ACQUISITION ENGINEER

EXAMINED BY: _____
DISTRICT PROGRAM DEVELOPMENT ENGINEER

EXAMINED BY: _____
DISTRICT OPERATIONS ENGINEER

EXAMINED BY: _____
DISTRICT PROJECT IMPLEMENTATION ENGINEER

EXAMINED BY: _____
DISTRICT CONSTRUCTION ENGINEER

EXAMINED BY: _____
DISTRICT MATERIALS ENGINEER

GENERAL NOTES

1. FACTORS USED FOR ESTIMATING PLAN QUANTITIES ARE AS FOLLOWS AND SHALL NOT BE USED FOR THE BASIS OF FINAL QUANTITIES:

ALL HOT-MIX ASPHALT	2.016 TONS/CU YD
ALL AGGREGATE	2.05 TONS/CU YD
EARTH	110 LBS/CU FT
BITUMINOUS MATERIALS:	
ON PAVEMENT	0.05 POUND/SQ FT
INTERMEDIATE LIFTS	0.025 POUND/SQ FT
ON AGGREGATE SURFACE	0.25 POUND/SQ FT

2. IF SO DIRECTED BY THE ENGINEER, DITCHES ADJACENT TO EMBANKMENTS SHALL BE CONSTRUCTED PRIOR TO STARTING THE CONSTRUCTION OF THE EMBANKMENT FILL.
3. THE QUANTITY OF SHORT TERM PAVEMENT MARKING SHOWN IN THE PLANS IS BASED ON ONE APPLICATION.
4. AT ALL LOCATIONS WHERE THE PROPOSED HOT MIX ASPHALT OR CONCRETE PAVEMENT JOINS AN EXISTING HOT MIX ASPHALT OR CONCRETE PAVEMENT, A FULL DEPTH SAWED JOINT SHALL BE CONSTRUCTED. THE COST OF THIS JOINT WILL BE INCLUDED IN THE COST OF THE TYPE OF PAVEMENT BEING CONSTRUCTED.
5. EXISTING PIPE UNDERDRAIN OUTLETS IN THE FORESLOPES OR MEDIAN SLOPES SHALL BE PRESERVED AND PROTECTED DURING CONSTRUCTION. ANY DAMAGE TO AN UNDERDRAIN OUTLET RESULTING FROM CONSTRUCTION ACTIVITY SHALL BE REPAIRED AT THE CONTRACTOR'S EXPENSE.
6. RECLAIMED ASPHALT PAVEMENT (RAP) WILL NOT BE ALLOWED FOR USE AS AGGREGATE IN AGGREGATE SHOULDERS, TYPE B.
7. TRIM EDGES OF EXISTING HOT MIX ASPHALT SURFACE FLUSH WITH EXISTING PAVEMENT PRIOR TO CONSTRUCTING NEW BASE COURSE WIDENING.
8. THE COST OF REMOVING THE CONCRETE GUTTER AT THE BASE OF THE EXISTING SLOPE WALL IS INCLUDED IN REMOVAL OF THE EXISTING STRUCTURE.

COMMITMENTS

1. THERE WERE NO COMMITMENTS MADE THAT AFFECT THE CONSTRUCTION OF THIS PROJECT AS OF 12/14/2018.

HMA MIXTURES REQUIREMENTS

MIXTURE USE	HOT-MIX ASPHALT SHOULDERS BOTTOM LIFT	HOT-MIX ASPHALT SHOULDERS TOP LIFT	BASE COURSE WIDENING
AC/PG	PG 64-22	PG 64-22	PG 64-22
DESIGN AIR VOIDS	4.0% @ Ndes=70	4.0% @ Ndes=70	4.0% @ Ndes=70
MIX COMPOSITION	IL-19.0	IL-9.5	IL-19.0
FRICTION AGGREGATE	N/A	MIX C	N/A
LOCATIONS	CH 7 SHOULDERS	CH 7 SHOULDERS	CH 7 BASE COURSE
MIXTURE WEIGHT	112 LBS/SQ YD/IN	112 LBS/SQ YD/IN	112 LBS/SQ YD/IN
ABR% (MAX)	SEE BDE SPECIAL PROVISION	SEE BDE SPECIAL PROVISION	SEE BDE SPECIAL PROVISION
QUALITY MANAGEMENT PROGRAM	QCQA	QCQA	QCQA
SUBLOT SIZE	N/A	N/A	N/A

SUMMARY OF QUANTITIES

CODE NO.	ITEM	UNIT	TOTAL QUANTITY	CONSTRUCTION CODE 90% FEDERAL 10% STATE	
				ROADWAY	
				0010	
				ROADWAY	
20200100	EARTH EXCAVATION	CU YD	269	269	
20400800	FURNISHED EXCAVATION	CU YD	870	870	
25000210	SEEDING, CLASS 2A	ACRE	1.25	1.25	
25000350	SEEDING, CLASS 7	ACRE	1.25	1.25	
25000400	NITROGEN FERTILIZER NUTRIENT	POUND	113	113	
25000500	PHOSPHORUS FERTILIZER NUTRIENT	POUND	113	113	
25000600	POTASSIUM FERTILIZER NUTRIENT	POUND	113	113	
25000700	AGRICULTURAL GROUND LIMESTONE	TON	2.5	2.5	
25100115	MULCH, METHOD 2	ACRE	1.25	1.25	
25100630	EROSION CONTROL BLANKET	SQ YD	1239	1239	
28000250	TEMPORARY EROSION CONTROL SEEDING	POUND	250	250	
28000305	TEMPORARY DITCH CHECKS	FOOT	50	50	
28000400	PERIMETER EROSION BARRIER	FOOT	1818	1818	
31100100	SUBBASE GRANULAR MATERIAL, TYPE A	TON	1000	1000	

⊛ SPECIALTY ITEM

REV. - MS

SUMMARY OF QUANTITIES

CODE NO.	ITEM	UNIT	TOTAL QUANTITY	CONSTRUCTION CODE 90% FEDERAL 10% STATE ROADWAY 0010 ROADWAY	
35650500	BASE COURSE WIDENING 10"	SQ YD	424	424	
40600290	BITUMINOUS MATERIALS (TACK COAT)	POUND	142	142	
40600990	TEMPORARY RAMP	SQ YD	194	194	
42000060	WELDED WIRE REINFORCEMENT	SQ YD	83	83	
42000080	PAVEMENT CONNECTOR (PCC) FOR BRIDGE APPROACH SLAB	SQ YD	119	119	
42000501	PORTLAND CEMENT CONCRETE PAVEMENT 10" (JOINTED)	SQ YD	540	540	
42001100	HIGH-EARLY-STRENGTH PORTLAND CEMENT CONCRETE PAVEMENT 10"	SQ YD	869	869	
42001300	PROTECTIVE COAT	SQ YD	1531	1531	
44000100	PAVEMENT REMOVAL	SQ YD	1585	1585	
44000500	COMBINATION CURB AND GUTTER REMOVAL	FOOT	81	81	
44004250	PAVED SHOULDER REMOVAL	SQ YD	72	72	
48203029	HOT-MIX ASPHALT SHOULDERS, 8"	SQ YD	93	93	
48203037	HOT-MIX ASPHALT SHOULDERS, 10"	SQ YD	436	436	
48203100	HOT-MIX ASPHALT SHOULDERS	TON	90	90	

⊛ SPECIALTY ITEM

REV. - MS

SUMMARY OF QUANTITIES

CODE NO.	ITEM	UNIT	TOTAL QUANTITY	CONSTRUCTION CODE 90% FEDERAL 10% STATE	
				ROADWAY	
				0010	
				ROADWAY	
50100100	REMOVAL OF EXISTING STRUCTURES	EACH	1	1	
50157300	PROTECTIVE SHIELD	SQ YD	300	300	
50200100	STRUCTURE EXCAVATION	CU YD	275	275	
50300225	CONCRETE STRUCTURES	CU YD	150.8	150.8	
50300255	CONCRETE SUPERSTRUCTURE	CU YD	251.7	251.7	
50300260	BRIDGE DECK GROOVING	SQ YD	796	796	
50300300	PROTECTIVE COAT	SQ YD	1043	1043	
50301350	CONCRETE SUPERSTRUCTURE (APPROACH SLAB)	CU YD	90.9	90.9	
50500105	FURNISHING AND ERECTING STRUCTURAL STEEL	L SUM	1	1	
50500505	STUD SHEAR CONNECTORS	EACH	2466	2466	
50800205	REINFORCEMENT BARS, EPOXY COATED	POUND	113310	113310	
50800515	BAR SPLICERS	EACH	944	944	
50901125	STEEL RAILING (TEMPORARY)	FOOT	512	512	
51100100	SLOPE WALL4 INCH	SQ YD	330	330	

⊛ SPECIALTY ITEM

REV. - MS

SUMMARY OF QUANTITIES

CODE NO.	ITEM	UNIT	TOTAL QUANTITY	CONSTRUCTION CODE: 90% FEDERAL 10% STATE	
				ROADWAY	
				0010	
				ROADWAY	
51201900	FURNISHING STEEL PILES HP14X89	FOOT	2125	2125	
51202100	FURNISHING STEEL PILES HP14X117	FOOT	1211	1211	
51202305	DRIVING PILES	FOOT	3336	3336	
51203900	TEST PILE STEEL HP14X89	EACH	1	1	
51204100	TEST PILE STEEL HP14X117	EACH	2	2	
51204650	PILE SHOES	EACH	42	42	
51500100	NAME PLATES	EACH	1	1	
52100520	ANCHOR BOLTS, 1"	EACH	36	36	
52200010	TEMPORARY SHEET PILING	SQ FT	500	500	
54262712	METAL FLARED END SECTIONS 12"	EACH	2	2	
58600101	GRANULAR BACKFILL FOR STRUCTURES	CU YD	104	104	
59100100	GEOCOMPOSITE WALL DRAIN	SQ YD	66	66	
60100060	CONCRETE HEADWALLS FOR PIPE DRAINS	EACH	2	2	
60100945	PIPE DRAINS 12"	FOOT	126	126	

⊛ SPECIALTY ITEM

REV. - MS

SUMMARY OF QUANTITIES

	CODE NO.	ITEM	UNIT	TOTAL QUANTITY	CONSTRUCTION CODE: 90% FEDERAL 10% STATE — ROADWAY 0010 ROADWAY	
	60500080	REMOVING CATCH BASINS TO MAINTAIN FLOW	EACH	1	1	
	60600095	CLASS SI CONCRETE (OUTLET)	CU YD	0.5	0.5	
	61000050	CONCRETE THRUST BLOCKS	EACH	2	2	
	61000335	TYPE G INLET BOX, STANDARD 610001	EACH	2	2	
⊛	63000001	STEEL PLATE BEAM GUARDRAIL, TYPE A, 6 FOOT POSTS	FOOT	125	125	
⊛	63000003	STEEL PLATE BEAM GUARDRAIL, TYPE A, 9 FOOT POSTS	FOOT	100	100	
⊛	63100045	TRAFFIC BARRIER TERMINAL, TYPE 2	EACH	2	2	
⊛	63100085	TRAFFIC BARRIER TERMINAL, TYPE 6	EACH	4	4	
⊛	63100167	TRAFFIC BARRIER TERMINAL, TYPE 1 (SPECIAL) TANGENT	EACH	4	4	
	63200310	GUARDRAIL REMOVAL	FOOT	739	739	
	64300450	IMPACT ATTENUATORS (NON-REDIRECTIVE), TEST LEVEL 3	EACH	2	2	
	64301090	ATTENUATOR BASE	SQ YD	55	55	
⊛	66900200	NON-SPECIAL WASTE DISPOSAL	CU YD	150	150	
⊛	66900530	SOIL DISPOSAL ANALYSIS	EACH	1	1	

⊛ SPECIALTY ITEM

REV. - MS

SUMMARY OF QUANTITIES

	CODE NO.	ITEM	UNIT	TOTAL QUANTITY	CONSTRUCTION CODE 90% FEDERAL 10% STATE ROADWAY 0010 ROADWAY	
⊛	66901001	REGULATED SUBSTANCES PRE-CONSTRUCTION PLAN	L SUM	1	1	
⊛	66901002	ON-SITE MONITORING OF REGULATED SUBSTANCES	CAL DA	2	2	
⊛	66901003	REGULATED SUBSTANCES FINAL CONSTRUCTION REPORT	L SUM	1	1	
	67000400	ENGINEER'S FIELD OFFICE, TYPE A	CAL MO	9	9	
	67100100	MOBILIZATION	L SUM	1	1	
	70103815	TRAFFIC CONTROL SURVEILLANCE	CAL DA	14	14	
	70106500	TEMPORARY BRIDGE TRAFFIC SIGNALS	EACH	1	1	
	70107025	CHANGEABLE MESSAGE SIGN	CAL DA	84	84	
	70200100	NIGHTTIME WORK ZONE LIGHTING	L SUM	1	1	
	70300100	SHORT TERM PAVEMENT MARKING	FOOT	92	92	
	70300150	SHORT TERM PAVEMENT MARKING REMOVAL	SQ FT	31	31	
	70300220	TEMPORARY PAVEMENT MARKING - LINE 4"	FOOT	4249	4249	
	70300280	TEMPORARY PAVEMENT MARKING - LINE 24"	FOOT	151	151	
	70400100	TEMPORARY CONCRETE BARRIER	FOOT	2200	2200	

⊛ SPECIALTY ITEM

REV. - MS

SUMMARY OF QUANTITIES

CODE NO.	ITEM	UNIT	TOTAL QUANTITY	CONSTRUCTION CODE: 90% FEDERAL 10% STATE	
				ROADWAY 0010	ROADWAY
70400200	RELOCATE TEMPORARY CONCRETE BARRIER	FOOT	150	150	
70500690	TEMPORARY TRAFFIC BARRIER TERMINAL, TYPE 11	EACH	2	2	
70600251	IMPACT ATTENUATORS, TEMPORARY (NON- REDIRECTIVE, NARROW), TEST LEVEL 3	EACH	2	2	
70600260	IMPACT ATTENUATORS, TEMPORARY (FULLY REDIRECTIVE, NARROW), TEST LEVEL 3	EACH	4	4	
70600352	IMPACT ATTENUATORS, RELOCATE (NON- REDIRECTIVE,NARROW), TEST LEVEL 3	EACH	2	2	
⊛ 72501000	TERMINAL MARKER - DIRECT APPLIED	EACH	4	4	
⊛ 78009004	MODIFIED URETHANE PAVEMENT MARKING - LINE 4"	FOOT	4249	4249	
⊛ 78009024	MODIFIED URETHANE PAVEMENT MARKING - LINE 24"	FOOT	151	151	
⊛ 78100100	RAISED REFLECTIVE PAVEMENT MARKER	EACH	10	10	
⊛ 78200005	GUARDRAIL REFLECTORS, TYPE A	EACH	12	12	
⊛ 78200010	BARRIER WALL REFLECTORS, TYPE B	EACH	6	6	
⊛ 86200300	UNINTERRUPTABLE POWER SUPPLY, EXTENDED	EACH	1	1	
X0326440	SURFACE REMOVAL, VARIABLE DEPTH (SPECIAL)	SQ YD	129	129	
X0327979	PAVEMENT MARKING REMOVAL - GRINDING	SQ FT	2382	2382	

⊛ SPECIALTY ITEM

REV. - MS

SUMMARY OF QUANTITIES

	CODE NO.	ITEM	UNIT	TOTAL QUANTITY	CONSTRUCTION CODE 90% FEDERAL 10% STATE ROADWAY 0010 ROADWAY	
⊛⊛⊛	X2503100	MOWING	UNIT	61	61	
	X6430120	REMOVE IMPACT ATTENUATORS, NO SALVAGE	EACH	2	2	
	X6431110	REMOVE ATTENUATOR BASE	EACH	2	2	
	X7010216	TRAFFIC CONTROL AND PROTECTION, (SPECIAL)	L SUM	1	1	
	X7040125	PINNING TEMPORARY CONCRETE BARRIER	EACH	24	24	
	Z0046304	PIPE UNDERDRAINS FOR STRUCTURES 4"	FOOT	124	124	
	Z0073400	TEMPORARY SUPPORT SYSTEM	EACH	1	1	
Ø	Z0076600	TRAINEES	HOUR	1000	1000	
Ø	Z0076604	TRAINEES TRAINING PROGRAM GRADUATE	HOUR	1000	1000	

⊛ SPECIALTY ITEM ⊛⊛⊛ 100% STATE Ø 0042

REV. - MS

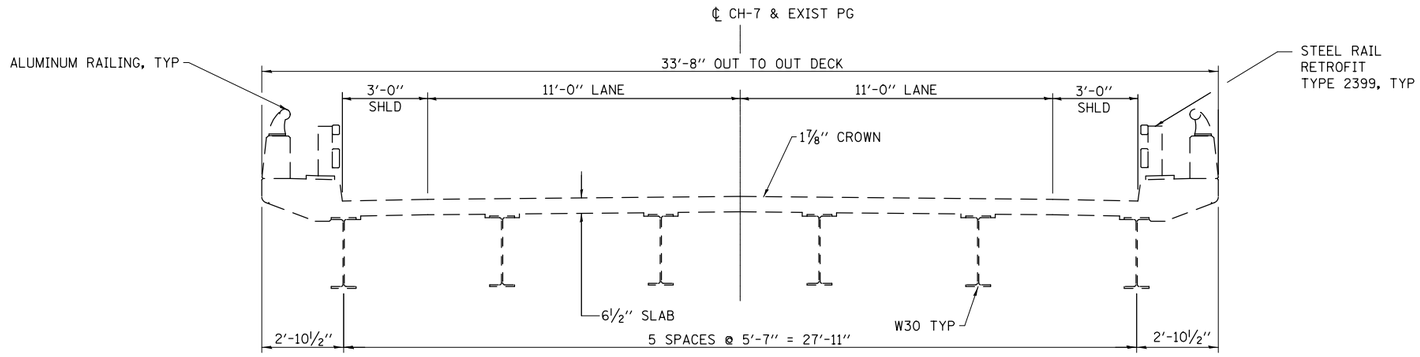

EXISTING TYPICAL SECTION
STA 76+44.50 TO STA 78+51.50

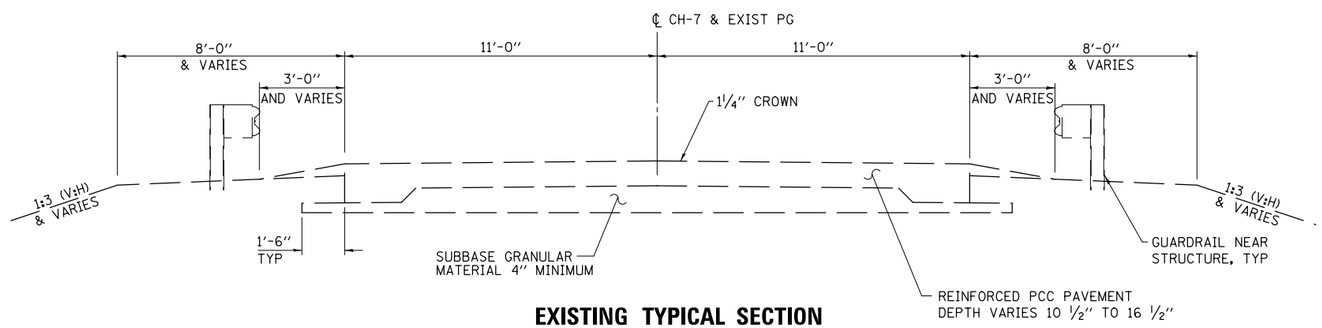

EXISTING TYPICAL SECTION
STA 76+03.17 TO STA 76+44.50
STA 78+51.50 TO STA 78+92.83

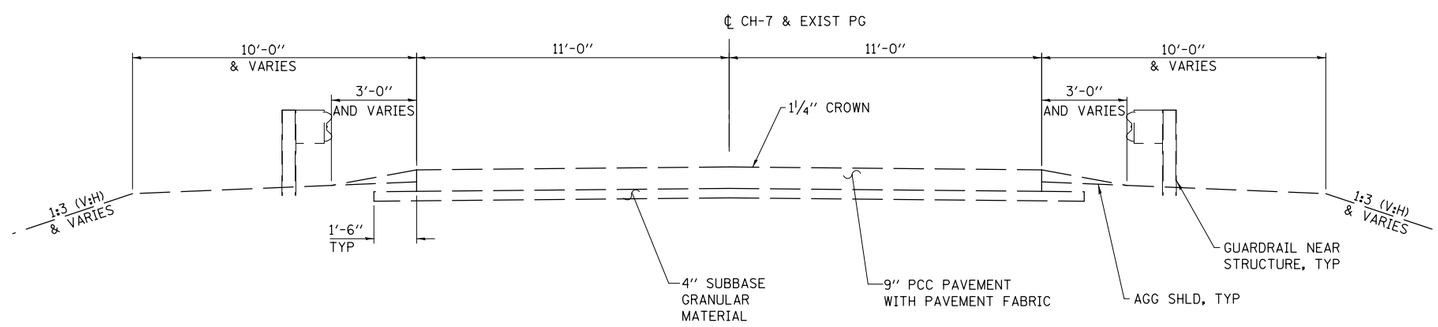

EXISTING TYPICAL SECTION
STA 73+10.00 TO STA 76+03.17
STA 78+92.83 TO STA 81+75.00

PRINT DRIVER = IPD.E.B.Bw1ref9
PEN TABLE = IDOT.VERB2.tbl
PEN WIDTH = DEFAULT
FILE NAME = 0978454-sht-typscsn01.dgn

ESCA CONSULTANTS, INC.	USER NAME = k.jk	DESIGNED - JHM	REVISED -	STATE OF ILLINOIS DEPARTMENT OF TRANSPORTATION	FAS 938 (CH-7) TYPICAL SECTIONS
	ESCA PROJECT NO. 1259.09	DRAWN - JHM	REVISED -		
	PLOT SCALE = 0.1667 ' / in.	CHECKED - JMS	REVISED -		
	PLOT DATE = 12/11/2018 7:58:07 AM	DATE - 08/18	REVISED -		SCALE: NONE / SHEET NO. 1 OF 3 SHEETS / STA. 73+10 TO STA. 81+75

F.A.I. RTE.	SECTION	COUNTY	TOTAL SHEETS	SHEET NO.
57	(77-1-3)HB-2	PULASKI	92	12
		CONTRACT NO. 78454		
FED. ROAD DIST. NO.	ILLINOIS	FED. AID PROJECT		

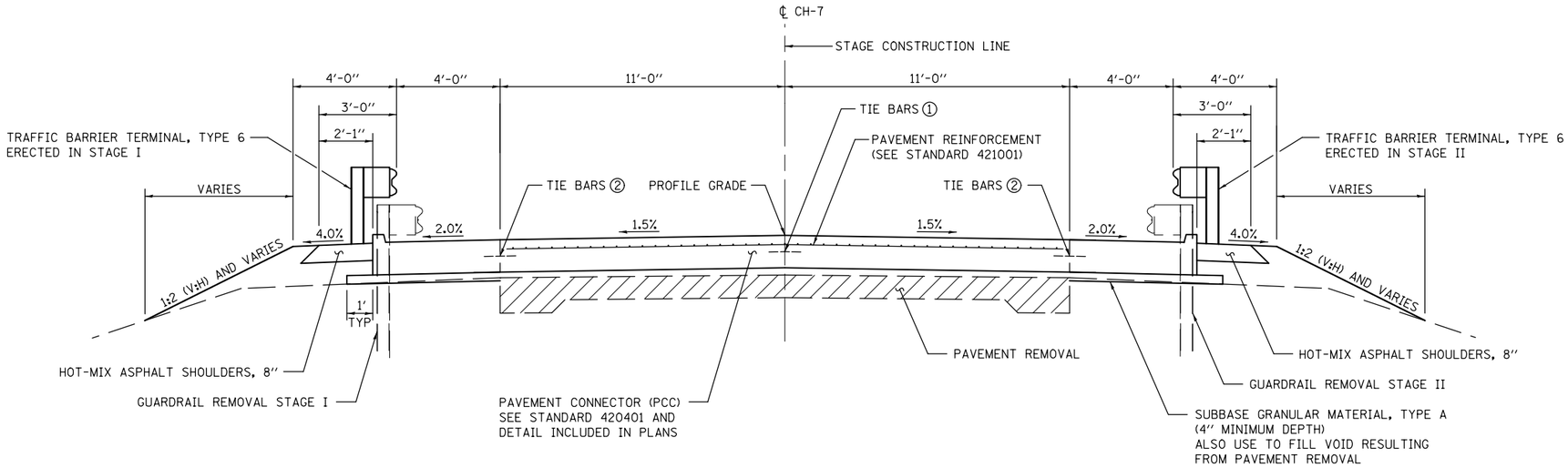

PROPOSED TYPICAL SECTION
STA 76+03.64 TO STA 76+20.56
STA 78+75.46 TO STA 78+92.38

① LONGITUDINAL CONSTRUCTION JOINT (TIE BAR GROUTED IN PLACE) PER STANDARD 420001

② LONGITUDINAL CONSTRUCTION JOINT (TIE BAR GROUTED IN PLACE) OR LONGITUDINAL SAWED JOINT PER STANDARD 420001

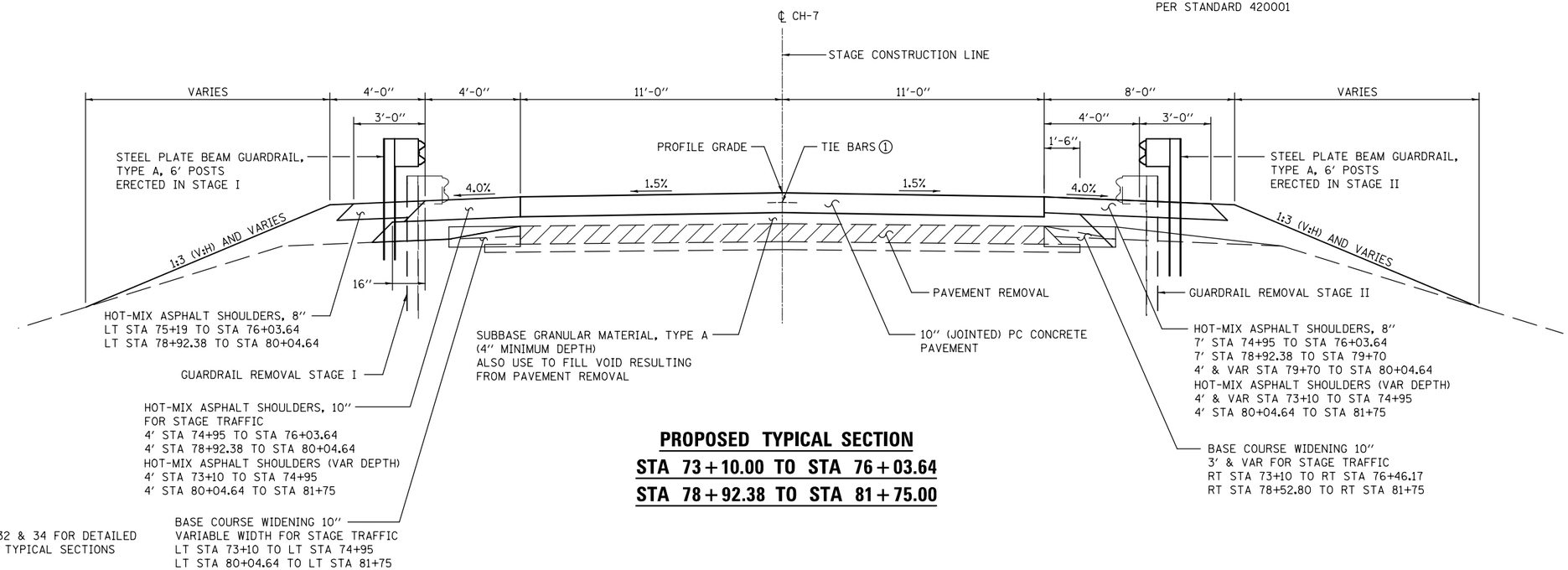

PROPOSED TYPICAL SECTION
STA 73+10.00 TO STA 76+03.64
STA 78+92.38 TO STA 81+75.00

NOTE:
SEE SHEETS 28, 30, 32 & 34 FOR DETAILED STAGE CONSTRUCTION TYPICAL SECTIONS

PRINT DRIVER = IDOT P.B.Bolt/9
PEN TABLE = IDOT LVERD2.tbl
SHEET SIZE = 24 X 36
FILE NAME = D:\78454-sht-typical02.dgn

ESCA CONSULTANTS, INC. ENVIRONMENTAL ENGINEERS	USER NAME = kjk	DESIGNED - JHM	REVISED -
	ESCA PROJECT NO. 1259.09	DRAWN - JHM	REVISED -
	PLOT SCALE = 0.1667 ' / in.	CHECKED - JMS	REVISED -
	PLOT DATE = 12/11/2018 7:58:07 AM	DATE - 08/18	REVISED -

STATE OF ILLINOIS
DEPARTMENT OF TRANSPORTATION

FAS 938 (CH-7) TYPICAL SECTIONS

SCALE: NONE | SHEET NO. 2 OF 3 SHEETS | STA. 73+10 TO STA. 81+75

F.A.I. RTE.	SECTION	COUNTY	TOTAL SHEETS	SHEET NO.
57	(77-1-3)HB-2	PULASKI	92	13
		CONTRACT NO. 78454		

FED. ROAD DIST. NO. | ILLINOIS | FED. AID PROJECT

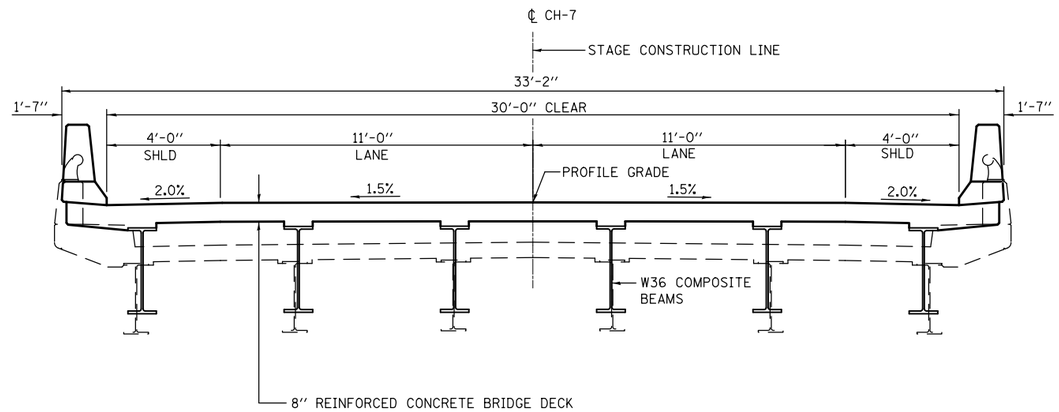

PROPOSED TYPICAL SECTION
STA 76+50.56 TO STA 78+45.46

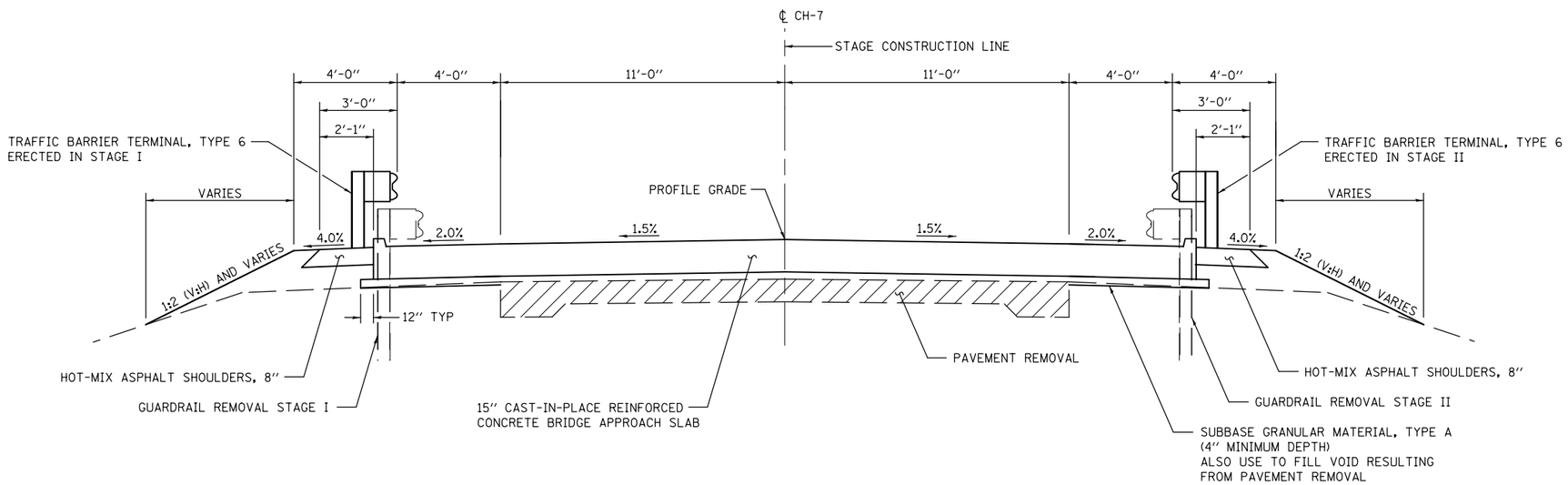

PROPOSED TYPICAL SECTION
STA 76+20.56 TO STA 76+50.56
STA 78+45.46 TO STA 78+75.46

PRINT DRIVER = L:PD_E_B_B_W_Inf_9
PEN TABLE = IDOT_VERDZ.tbl
PEN WIDTH = DEFAULT
FILE NAME = C:\PW_WORK\esca\d0454-ph1-typsec02.dgn

ESCA CONSULTANTS, INC.	USER NAME = k.jk	DESIGNED - JHM	REVISED -	STATE OF ILLINOIS DEPARTMENT OF TRANSPORTATION	FAS 938 (CH-7) TYPICAL SECTIONS			F.A.I. RTE.	SECTION	COUNTY	TOTAL SHEETS	SHEET NO.
	ESCA PROJECT NO. 1259.09	DRAWN - JHM	REVISED -					57	(77-1-3) BR-1	PULASKI	92	14
	PLOT SCALE = 0.1667 ' / in.	CHECKED - JMS	REVISED -							CONTRACT NO. 78454		
	PLOT DATE = 12/11/2018 7:58:08 AM	DATE - 08/18	REVISED -		SCALE: NONE	SHEET NO. 3 OF 3 SHEETS	STA. 73+10 TO STA. 81+75	FED. ROAD DIST. NO.	ILLINOIS	FED. AID PROJECT		

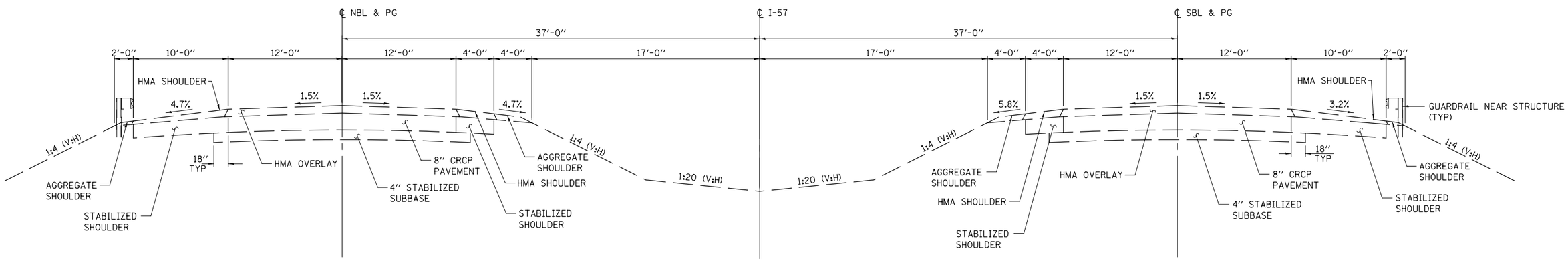

EXISTING I-57 TYPICAL SECTION

STA 209+50 TO STA 243+00

PRINT DRIVER = I_PO_E_B_Bw1of9
PEN TABLE = IDOT-IVERSE.tbl
PAGE SIZE = 22"X17"
FILE NAME = D178454-sht-typical03.dgn

ESCA CONSULTANTS, INC.	USER NAME = kjk	DESIGNED - JHM	REVISED -	STATE OF ILLINOIS DEPARTMENT OF TRANSPORTATION	FAI-57 TYPICAL SECTION		F.A.I. RTE.	SECTION	COUNTY	TOTAL SHEETS / SHEET NO.
	ESCA PROJECT NO. 1295.09	DRAWN - JHM	REVISED -				57	(77-1-3)HB-2	PULASKI	92 / 15
	PLOT SCALE = 0.1667 ' / in.	CHECKED - JMS	REVISED -						CONTRACT NO. 78454	
	PLOT DATE = 12/11/2018 7:58:08 AM	DATE - 08/18	REVISED -		SCALE: NONE	SHEET NO. 1 OF 2 SHEETS STA. TO STA.	FED. ROAD DIST. NO.	ILLINOIS	FED. AID PROJECT	

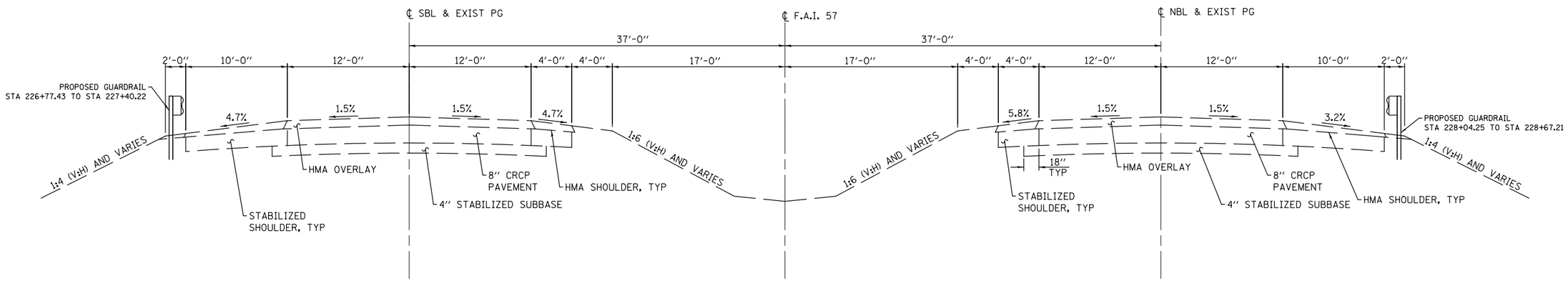

PROPOSED I-57 TYPICAL SECTION

PRINT DRIVER = I_PDF_B_Bw1wf9
PEN TABLE = IDOT_VER82.tbl
WIDTH TABLE = IDOT_VER82.tbl
FILE NAME = 0978454-sht-typscs184.dgn

ESCA CONSULTANTS, INC. ENGINEERING & ARCHITECTURAL CONSULTANTS	USER NAME = kjk	DESIGNED - JHM	REVISED -	STATE OF ILLINOIS DEPARTMENT OF TRANSPORTATION	FAI-57 TYPICAL SECTION			F.A.I. RTE.	SECTION	COUNTY	TOTAL SHEETS / SHEET NO.
	ESCA PROJECT NO. 1259.09	DRAWN - JHM	REVISED -					57	(77-1-3)HB-2	PULASKI	92 / 16
	PLOT SCALE = 0.1667 ' / in.	CHECKED - JMS	REVISED -							CONTRACT NO. 78454	
	PLOT DATE = 12/11/2018 7:58:09 AM	DATE - 08/18	REVISED -		SCALE: NONE	SHEET NO. 2 OF 2 SHEETS	STA. TO STA.	FED. ROAD DIST. NO.	ILLINOIS	FED. AID PROJECT	

EARTHWORK SCHEDULE

LOCATION		EARTH EXCAVATION	SUITABLE EARTH EXCAVATION ADJUSTED FOR SHRINKAGE	EMBANKMENT (NOT A PAY ITEM)	EARTHWORK BALANCE WASTE (+) OR SHORTAGE (-)
		CU YD	CU YD	CU YD	CU YD
CH 7 PRE STAGE I	RT 72+56.13 TO 76+46.17	54	41	3	38
CH 7 PRE STAGE I	RT 78+52.80 TO 82+17.04	56	42	2	40
CH 7 PRE STAGE I	LT 72+89.65 TO 74+95.00	35	26	1	25
CH 7 PRE STAGE I	LT 80+04.64 TO 82+44.50	36	27	1	26
CH 7 STAGE I	LT 74+50.00 TO 76+89.00	3	2	142	-140
CH 7 STAGE I	LT 78+07.00 TO 80+50.00	2	1.5	170	-169
CH 7 STAGE II	RT 74+50.00 TO 76+93.00	1	0.75	136	-135
CH 7 STAGE II	RT 78+12.00 TO 80+50.00	1	0.75	266	-265
CH 7 STAGE III	RT 73+10.00 TO 74+95.00	15	11	19	-8
CH 7 STAGE III	RT 80+04.64 TO 81+75.00	21	16	9	7
CH 7 STAGE IV	LT 73+10.00 TO 74+95.00	14	11	33	-22
CH 7 STAGE IV	LT 80+04.64 TO 81+75.00	19	14	11	3
I-57	224+50.00 TO 231+00.00	12	9	279	-270
	TOTALS	269	202	1072	-870

NOTES:
1. EXCAVATION USED AS EMBANKMENT = (SUITABLE EARTH EXCAVATION)•0.75
2. THE EARTHWORK SCHEDULE DOES NOT REFLECT THE EARTHWORK BALANCE FOR THE VARIOUS STAGES.

PCC PAVEMENT SCHEDULE

LOCATION	SUBBASE GRANULAR MATERIAL, TYPE A	PC CONCRETE PAVEMENT, 10" (JOINTED)	HIGH-EARLY-STRENGTH PC CONCRETE PAVEMENT 10"
	TON	SQ YD	SQ YD
CH 7 STA 73+10 TO STA 74+95	168		452
CH 7 STA 74+95 TO STA 76+03.64	224	266	
CH 7 STA 78+92.38 TO STA 80+04.64	262	274	
CH 7 STA 80+04.64 TO STA 81+75	129		417
TOTALS	783	540	869

PAVEMENT, SHOULDER & CURB AND GUTTER REMOVAL SCHEDULE

LOCATION	PAVEMENT REMOVAL	COMBINATION CURB & GUTTER REMOVAL	PAVED SHOULDER REMOVAL
	SQ YD	FOOT	SQ YD
CH 7 RT STA 72+56.13 TO RT STA 72+56.70			6
CH 7 RT STA 72+56.13 TO RT STA 72+89.04		53	
CH 7 LT STA 72+89.65 TO LT STA 73+09.75		28	
CH 7 STA 73+10 TO STA 76+46.81	803 (1)		
CH 7 STA 78+49.81 TO STA 81+75	782 (1)		
CH 7 RT STA 81+84.92 TO RT STA 82+17.04			21
CH 7 LT STA 81+90 TO LT STA 82+44.50			45
TOTALS	1,585	81	72

(1) NOTE: EXISTING REINFORCED BRIDGE APPROACH PAVEMENT SHALL BE REMOVED AND WILL BE PAID FOR AT THE CONTRACT UNIT UNIT PRICE PER SQUARE YARD FOR PAVEMENT REMOVAL.

SHOULDER SCHEDULE

LOCATION	HOT-MIX ASPHALT SHOULDERS, 8"	HOT-MIX ASPHALT SHOULDERS, 10"	HOT-MIX ASPHALT SHOULDERS	BITUMINOUS MATERIALS (TACK COAT)
	SQ YD	SQ YD	TON	POUND
CH 7 RT STA 72+56.13 TO RT 73+10		39		
CH 7 LT STA 72+92.13 TO LT STA 73+10		11		
CH 7 RT STA 73+10 TO RT STA 74+95			27	37
CH 7 LT STA 73+10 TO LT STA 74+95			32	37
CH 7 LT STA 74+95 TO LT STA 76+33.75	34	48		
CH 7 RT STA 74+95 TO RT STA 76+37.37	8	85		
CH 7 LT STA 78+58.65 TO LT STA 80+04.64	44	50		
CH 7 RT STA 78+62.27 TO RT STA 80+04.64	7	77		
CH 7 RT STA 80+04.64 TO RT STA 81+75			17	34
CH 7 LT STA 80+04.64 TO LT STA 81+75			14	34
CH 7 RT STA 81+75 TO RT STA 82+17.04		42		
CH 7 LT STA 81+75 TO LT STA 82+44.50		84		
TOTALS	93	436	90	142

SEEDING SCHEDULE

LOCATION	SEEDING, CLASS 2A	SEEDING, CLASS 7	NITROGEN FERTILIZER NUTRIENT	PHOSPHORUS FERTILIZER NUTRIENT	POTASSIUM FERTILIZER NUTRIENT	AGRICULTURAL GROUND LIMESTONE	MULCH, METHOD 2
	ACRE	ACRE	POUND	POUND	POUND	TON	ACRE
I-57 MEDIAN	0.52	0.52	47	47	47	1.0	0.52
CH 42 NW QUADRANT	0.20	0.20	18	18	18	0.4	0.20
CH 42 SW QUADRANT	0.15	0.15	14	14	14	0.3	0.15
CH 42 NE QUADRANT	0.20	0.20	18	18	18	0.4	0.20
CH 42 SE QUADRANT	0.18	0.18	16	16	16	0.4	0.18
TOTALS	1.25	1.25	113	113	113	2.5	1.25

PAVEMENT CONNECTOR FOR BRIDGE APPROACH SCHEDULE

LOCATION	SUBBASE GRANULAR MATERIAL, TYPE A	PAVEMENT CONNECTOR (PCC) FOR BRIDGE APPROACH SLAB	PROTECTIVE COAT	WELDED WIRE REINFORCEMENT
	TON	SQ YD	SQ YD	SQ YD
SN 077-0041 WEST APPROACH	108.5 (2)	59.5	61	41.4
SN 077-0041 EAST APPROACH	108.5 (2)	59.5	61	41.4
TOTALS	217	119	122	83

(2) NOTE: SUBBASE GRANULAR MATERIAL QUANTITY INCLUDES THE QUANTITY OF SUBBASE UNDER THE APPROACH SLAB THAT IS IN EXCESS OF THE 4" THICKNESS BENEATH THE BRIDGE APPROACH SLAB. REFER TO DETAIL ON SHEET NO. 42.

PIPE DRAIN & INLET SCHEDULE

LOCATION	METAL FLARED END SECTIONS 12"	CONCRETE HEADWALL FOR PIPE DRAINS	PIPE DRAINS 12"	CONCRETE THRUST BLOCKS	TYPE G INLET BOX STANDARD 610001
	EACH	EACH	FOOT	EACH	EACH
CH 7 LT STA 76+44		1			
CH 7 LT STA 78+44		1			
CH 7 RT STA 78+85.10	1		57	1	1
CH 7 LT STA 78+85.74	1		69	1	1
TOTALS	2	2	126	2	2

CLASS SI CONCRETE (OUTLET) SCHEDULE

LOCATION	CLASS SI CONCETE (OUTLET)
	CU YD
CH 7 LT STA 72+89.65	0.5
TOTAL	0.5

TEMPORARY RAMP

LOCATION	TEMPORARY RAMP
	SQ YD
CH 7 LT STA 74+57 LT LT STA 74+95	68
CH 7 LT STA 80+04.64 TO LT STA 80+75.05	126
TOTAL	194

EROSION CONTROL SCHEDULE

LOCATION	EROSION CONTROL BLANKET	TEMPORARY EROSION CONTROL SEEDING	PERIMETER EROSION BARRIER	TEMPORARY DITCH CHECKS
	SQ YD	POUND	FOOT	FOOT
I-57 MEDIAN	0	104	0	50
CH 7 NW QUADRANT	142	39	212	0
CH 7 SW QUADRANT	280	29	206	0
CH 7 NE QUADRANT	397	39	265	0
CH 7 SE QUADRANT	420	39	265	0
TOTALS	1,239	250	1,818	50

GUARDRAIL SCHEDULE

LOCATION	GUARDRAIL REMOVAL	SPBGR, TYPE A, 6 FT POSTS	SPBGR, TYPE A, 9 FT POSTS	TBT, TYPE 2	TBT, TYPE 6	TBT, TYPE 1 (SPL) TANGENT	GUARDRAIL REFLECTORS, TYPE A	BARRIER WALL REFLECTORS, TYPE B	TERMINAL MARKER - DIRECT APPLIED
	FOOT	FOOT	FOOT	EACH	EACH	EACH	EACH	EACH	EACH
SN 077-0041 NORTHWEST CORNER	103	12.5			1	1	2		1
SN 077-0041 SOUTHWEST CORNER	190	50			1	1	2		1
SN 077-0041 NORTHEAST CORNER	189	50			1	1	2		1
SN 077-0041 SOUTHEAST CORNER	102	12.5			1	1	2		1
I-57 NBL	80		50	1			2		
I-57 SBL	75		50	1			2		
STRUCTURE 077-0041 EASTBOUND								3	
STRUCTURE 077-0041 WESTBOUND								3	
TOTALS	739	125	100	2	4	4	12	6	4

IMPACT ATTENUATOR SCHEDULE

LOCATION	IMPACT ATTENUATORS (NON-REDIRECTIVE), TEST LEVEL 3	ATTENUATOR BASE	REMOVE IMPACT ATTENUATORS, (NO SALVAGE)	REMOVE ATTENUATOR BASE
	EACH	SQ YD	EACH	EACH
I-57 MEDIAN SOUTH OF PIER	1	27.5	1	1
I-57 MEDIAN NORTH OF PIER	1	27.5	1	1
TOTAL	2	55	2	2

TEMPORARY PAVEMENT MARKING SCHEDULE

LOCATION	DESCRIPTION	TEMPORARY PAVEMENT MARKING - LINE 4"		TEMPORARY PAVEMENT MARKING - LINE 24"	PAVEMENT MARKING REMOVAL - GRINDING
		FOOT		FOOT	SQ FT
		WHITE	YELLOW	WHITE	
CH 7					
RT STA 72+00 TO LT STA 83+00	NO-PASS		1,100		366.7
LT STA 72+90 TO LT STA 83+00	NO-PASS		1,100		366.7
RT STA 72+26.13 TO RT STA 72+82	EDGE LINE	72			24
RT STA 72+82 TO RT STA 81+94.08	EDGE LINE	912			304
RT STA 81+94.08 TO RT STA 82+17.04	EDGE LINE	47			15.7
LT STA 72+89.65 TO LT STA 73+09	EDGE LINE	29			9.7
LT STA 73+09 TO LT STA 82+18.64	EDGE LINE	910			303.3
LT STA 82+18.64 TO LT STA 82+44.50	EDGE LINE	79			26.3
I-57 RAMPS					
RAMP D	STOP BAR			73	146
RAMP B	STOP BAR			78	156
	SUBTOTALS	2,049	2,200		
	TOTALS	4,249		151	1,718

BASE COURSE WIDENING SCHEDULE

LOCATION	BASE COURSE WIDENING 10"
	SQ YD
CH 7 RT STA 73+10 TO RT STA 76+46.17	135
CH 7 LT STA 73+10 TO LT STA 74+95	85
CH 7 RT STA 78+52.80 TO STA 81+75	128
CH 7 LT STA 80+04.64 TO STA 81+75	76
TOTAL	424

SURFACE REMOVAL, VARIABLE DEPTH (SPECIAL) SCHEDULE

LOCATION	SURFACE REMOVAL (SPECIAL)
	SQ YD
CH 7 RT STA 73+10 TO RT STA 73+60	22
CH 7 LT STA 73+10 TO LT STA 73+60	22
CH 7 RT STA 80+90 TO STA 81+75	38
CH 7 LT STA 80+70 TO STA 81+75	47
TOTAL	129

SHORT TERM PAVEMENT MARKING & TRAFFIC CONTROL MARKING REMOVAL

LOCATION	DESCRIPTION	SHORT TERM PAVEMENT MARKING	SHORT TERM PAVEMENT MARKING REMOVAL	PAVEMENT MARKING REMOVAL - GRINDING
		FOOT	SQ FT	SQ FT
		YELLOW		
CH 7 STA 73+10 TO STA 81+75	CENTERLINE	92	31	
STAGE I				
CH 7 STA 71+68 TO STA 74+20	CENTERLINE			168
CH 7 STA 80+80 TO STA 83+36	CENTERLINE			171
CH 7 RT STA 74+27 TO RT STA 80+71	EDGE LINE			215
STAGE II				
CH 7 LT STA 73+88 TO LT STA 74+57	EDGE LINE			23
CH 7 LT STA 80+75.05 TO LT STA 81+11	EDGE LINE			12
STAGE III				
CH 7 LT STA 73+29 TO LT STA 74+27	EDGE LINE			33
CH 7 LT STA 80+71 TO LT STA 81+96	EDGE LINE			42
TOTALS		92	31	664

PAVEMENT MARKING & RAISED REFLECTIVE PAVEMENT MARKER SCHEDULE

LOCATION	DESCRIPTION	MODIFIED URETHANE PAVEMENT MARKING - LINE 4"	MODIFIED URETHANE PAVEMENT MARKING - LINE 4"	MODIFIED URETHANE PAVEMENT MARKING - LINE 24"	RAISED REFLECTIVE PAVEMENT MARKER
		FOOT	FOOT	FOOT	EACH
		YELLOW	WHITE	WHITE	AMBER
CH 7					
73+10 TO 76+50.56 & 78+45.46 TO 81+75	AMBER BI-DIRECT				10
RT STA 72+00 TO LT STA 83+00	NO-PASS	1,100			
LT STA 72+90 TO LT STA 83+00	NO-PASS	1,100			
RT STA 72+26.13 TO RT STA 72+82	EDGE LINE		72		
RT STA 72+82 TO RT STA 81+94.08	EDGE LINE		912		
RT STA 81+94.08 TO RT STA 82+17.04	EDGE LINE		47		
LT STA 72+89.65 TO LT STA 73+09	EDGE LINE		29		
LT STA 73+09 TO LT STA 82+18.64	EDGE LINE		910		
LT STA 82+18.64 TO LT STA 82+44.50	EDGE LINE		79		
I-57 RAMPS					
RAMP D	STOP BAR			73	
RAMP B	STOP BAR			78	
	SUBTOTALS	2,200	2,049		
	TOTALS	4,249		151	10

TEMPORARY CONCRETE BARRIER SCHEDULE

LOCATION	TEMPORARY CONCRETE BARRIER	RELOCATE TEMPORARY CONCRETE BARRIER	PINNING TEMPORARY CONCRETE BARRIER	TEMPORARY TBT, TYPE 11
	FOOT	FOOT	EACH	EACH
CH 7 STAGE I TRAFFIC CONTROL	150		12	2
CH 7 STAGE II TRAFFIC CONTROL	500	150	12	
I-57 NBL TRAFFIC CONTROL	775			
I-57 SBL TRAFFIC CONTROL	775			
TOTALS	2,200	150	24	2

PRINT DRIVER = LPD_E_B_ps1v5g
PGN = ALL
PGE SIZE = 11 X 17
FILE NAME = D:\7259454-ant-schedule02.dgn

ESCA CONSULTANTS, INC.
ENVIRONMENTAL & ENGINEERING CONSULTANTS

USER NAME = kjk	DESIGNED - JHM	REVISED -
ESCA PROJECT NO. 1259.09	DRAWN - JHM	REVISED -
PLOT SCALE = 0.1667 ' / in.	CHECKED - JMS	REVISED -
PLOT DATE = 12/11/2018 7:58:10 AM	DATE - 12/18	REVISED -

STATE OF ILLINOIS
DEPARTMENT OF TRANSPORTATION

SCHEDULES OF QUANTITIES

SCALE: NA | SHEET NO. 2 OF 2 SHEETS | STA. TO STA.

F.A.I. RTE.	SECTION	COUNTY	TOTAL SHEETS	SHEET NO.
57	(77-1-3)HB-2	PULASKI	92	18

CONTRACT NO. 78455

FED. ROAD DIST. NO. | ILLINOIS | FED. AID PROJECT

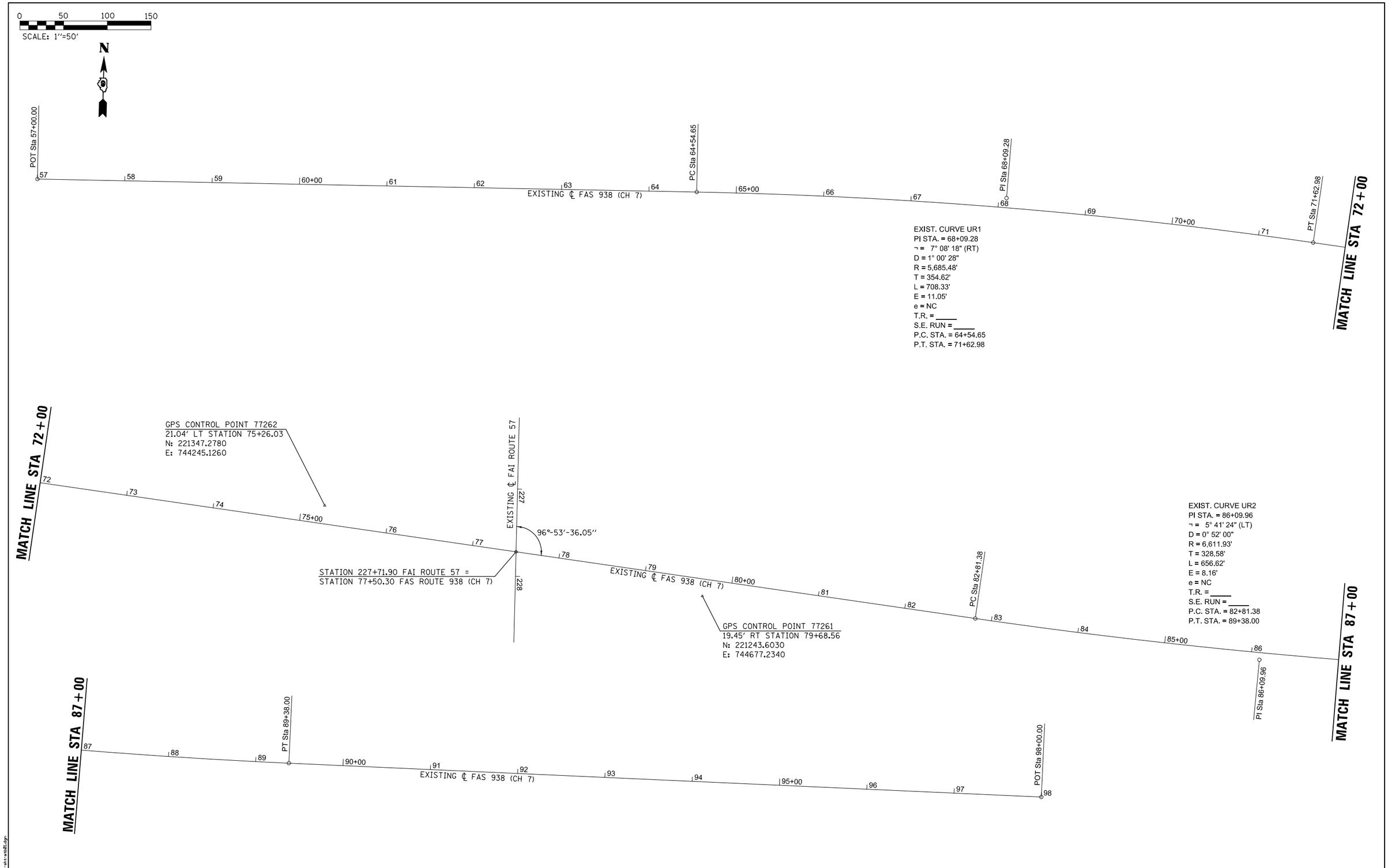

PRINT DRIVER = LPD.E.B.Bw1cf9
PEN TABLE = IDOT_VERB2.tbl
SHEET SIZE = 24.00 x 36.00
FILE NAME = D478454-ms-ustR.dgn

ESCA CONSULTANTS, INC. ENGINEERS & ENVIRONMENTAL SCIENTISTS	USER NAME = kjk	DESIGNED - JHM	REVISED -	STATE OF ILLINOIS DEPARTMENT OF TRANSPORTATION	ALIGNMENT, TIES, AND BENCHMARKS			F.A.I. RTE.	SECTION	COUNTY	TOTAL SHEETS	SHEET NO.
	ESCA PROJECT NO. 1259.09	DRAWN - JHM	REVISED -					57	(77-1-3)HB-2	PULASKI	92	19
	PLOT SCALE = 0.1667 ' / in.	CHECKED - JMS	REVISED -							CONTRACT NO. 78454		
	PLOT DATE = 12/11/2018	DATE - 08/18	REVISED -		SCALE: 1"=50'	SHEET NO. 1 OF 3 SHEETS	STA. 57+00.00 TO STA. 98+00.00	FED. ROAD DIST. NO.	ILLINOIS	FED. AID PROJECT		

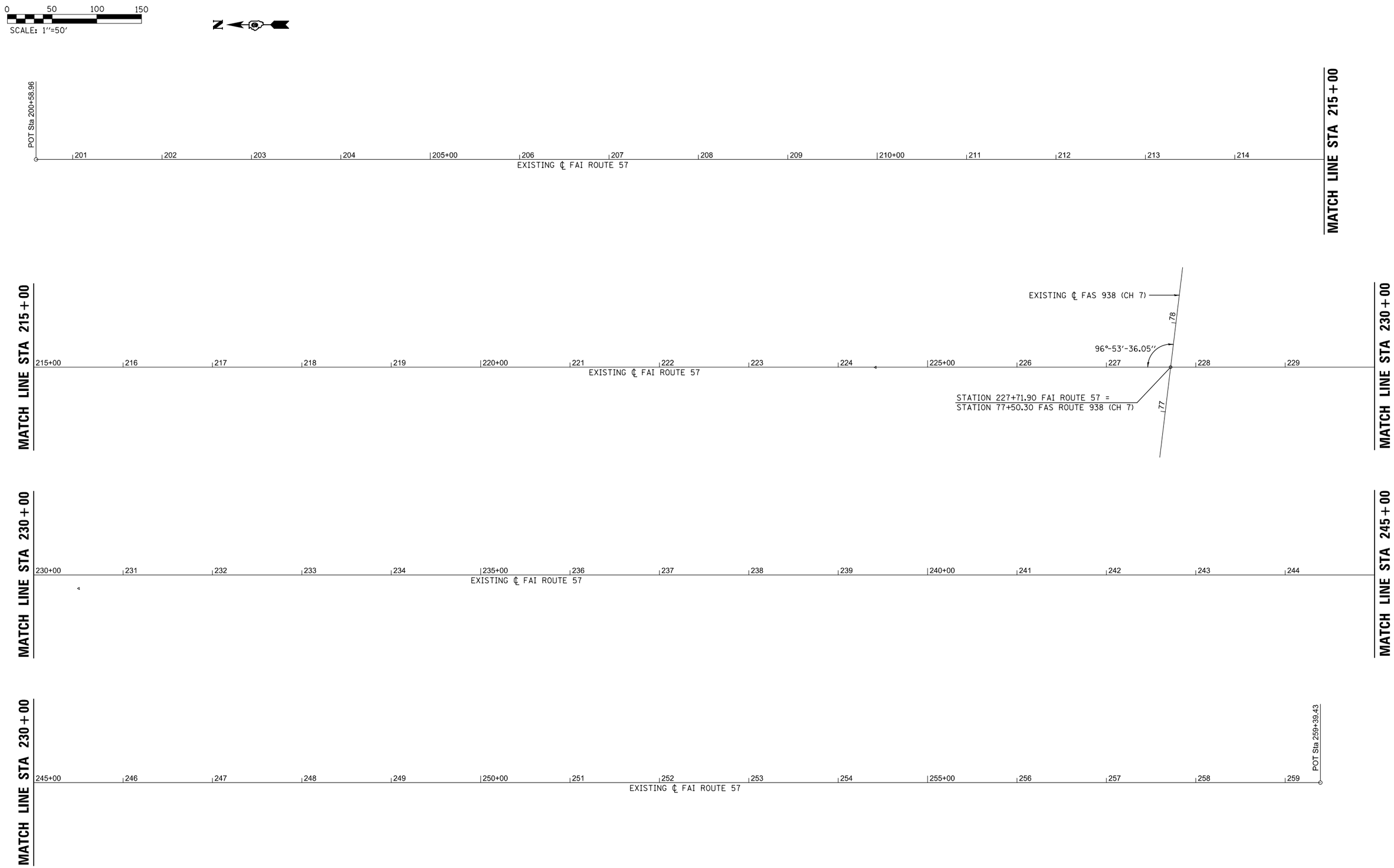

PRINT DRIVER = I_PD.E.B.Ps1.inf9
PEN TABLE = DOT1.VERDZ.tbl
PLOT NAME = 78454
FILE NAME = D978454-sht-ovlaDL.dgn

ESCA CONSULTANTS, INC.	USER NAME = kjk	DESIGNED - JHM	REVISED -	STATE OF ILLINOIS DEPARTMENT OF TRANSPORTATION	ALIGNMENT, TIES, AND BENCHMARKS	F.A.I. RTE.	SECTION	COUNTY	TOTAL SHEETS	SHEET NO.
	ESCA PROJECT NO. 1259.09	DRAWN - JHM	REVISED -			57	(77-1-3)HB-2	PULASKI	92	20
	PLOT SCALE = 0.1667 ' / in.	CHECKED - JMS	REVISED -					CONTRACT NO. 78454		
	PLOT DATE = 12/11/2018	DATE - 08/18	REVISED -		SCALE: 1"=50' SHEET NO. 2 OF 3 SHEETS STA. 200+58.96 TO STA. 259+39.43	FED. ROAD DIST. NO.	ILLINOIS	FED. AID PROJECT		

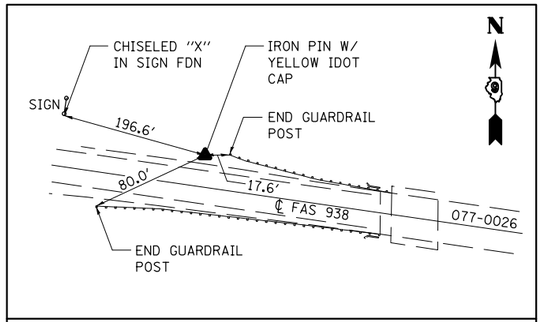

Control Point #77262

STA 75+26.03, 21.04' IT ℄ FAS 938
N = 221347.278 E = 744245.126

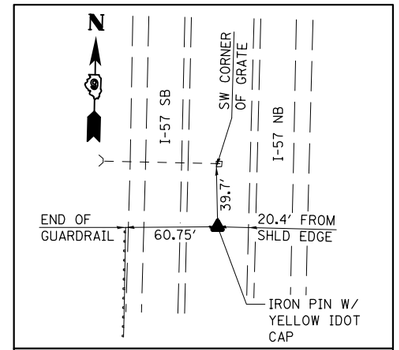

Control Point POT 11

STA 224+41.67, 0.17' RT ℄ I-57
N = 221624.361 E = 744471.773

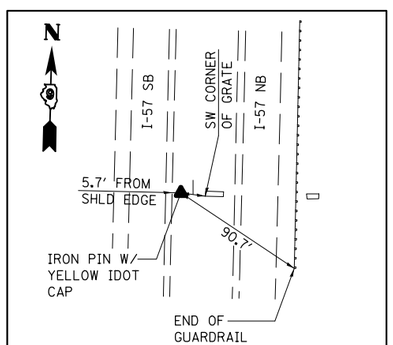

Contrl Point #77263

STA 230+50.33, 15.145' RT ℄ I-57
N = 221016.226 E = 744442.245

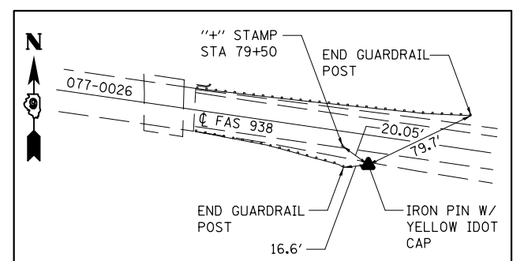

Control Point #77261

STA 79+68.56, 19.45' RT ℄ FAS 938
N = 221243.603 E = 744677.234

BENCHMARKS

NAVD 88

B.M. #300
CHISELED SQUARE ON S.E. CORNER OF
CONC V-DITCH END, UNDER BRIDGE
SN 077-0026, STA 227+89 (I-57), 61.4' RT
ELEVATION 341.27

B.M. #301
CHISELED SQUARE ON SOUTH SIDE OF
CONC FOUNDATION OF A SIGN (SOUTH LEG)
"I-57 SOUTH CAIRO", STA. 73+30, 34.7' LT
ELEVATION 357.85

PRINT DRIVER = IPOLE.B.Bw1w-fg
PEN TABLE = IDOT.XCSB2(.tbl)
WORK UNIT = 1000 IN/IN
FILE NAME = D:\78454-alt-ties01.dgn

ESCA CONSULTANTS, INC.
ROAD & STRUCTURAL ENGINEERS

USER NAME = kjk	DESIGNED - JHM	REVISED -	
ESCA PROJECT NO. 1259.09	DRAWN - JHM	REVISED -	
PLOT SCALE = 0.1667 ' / in.	CHECKED - JMS	REVISED -	
PLOT DATE = 12/11/2018	DATE - 08/18	REVISED -	

STATE OF ILLINOIS
DEPARTMENT OF TRANSPORTATION

ALIGNMENT, TIES, AND BENCHMARKS

SCALE: NONE | SHEET NO. 3 OF 3 SHEETS | STA. TO STA.

F.A.I. RTE.	SECTION	COUNTY	TOTAL SHEETS	SHEET NO.
57	(77-1-3)HB-2	PULASKI	92	21
		CONTRACT NO. 78454		

FED. ROAD DIST. NO. | ILLINOIS | FED. AID PROJECT

B.M. #301 ELEV. 357.85
CHISELED SQUARE ON SOUTH SIDE OF
CONC FOUNDATION OF A SIGN (SOUTH LEG)
"I-57 SOUTH CAIRO", STA. 73+30, 34.7' LT

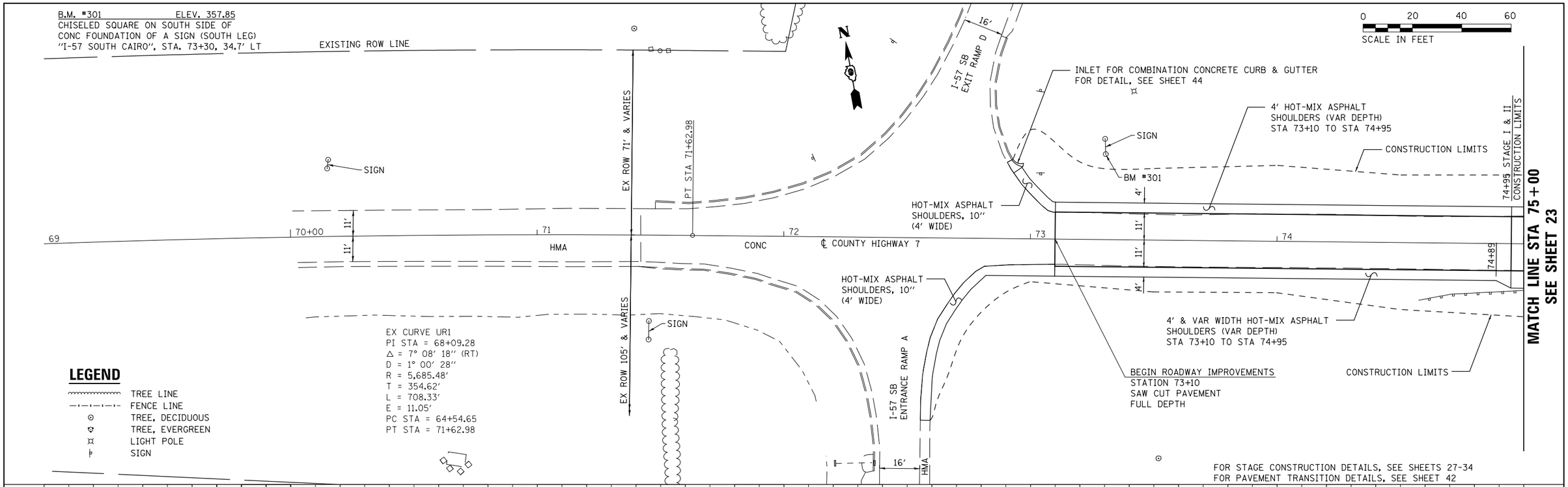

LEGEND

- TREE LINE
- FENCE LINE
- TREE, DECIDUOUS
- TREE, EVERGREEN
- LIGHT POLE
- SIGN

PLAN			BY	DATE
NOTE BOOK NO. ____	SURVEYED			
	PLOTTED			
	ALIGNMENT CHECKED			
	RT. OF WAY CHECKED			
	CADD FILE NAME			

PROFILE			BY	DATE
NOTE BOOK NO. ____	SURVEYED			
	PLOTTED			
	GRADES CHECKED			
	B.M. NOTED			
	STRUCTURE NOTATNS CHKD			

ESCA CONSULTANTS, INC.
HIGH & STRUCTURAL ENGINEERS

USER NAME = kjk	DESIGNED - JHM	REVISED -
ESCA PROJECT 1259.09	DRAWN - JHM	REVISED -
PLOT SCALE = 40.0000 ' / in.	CHECKED - JMS	REVISED -
PLOT DATE = 12/11/2018	DATE - 08/18	REVISED -

STATE OF ILLINOIS
DEPARTMENT OF TRANSPORTATION

FAS 938 (CH-7) PLAN AND PROFILE

SCALE: AS SHOWN | SHEET 1 OF 3 SHEETS | STA. 70+00 TO STA. 75+00

F.A.I. RTE.	SECTION	COUNTY	TOTAL SHEETS	SHEET NO.
57	(77-1-3)HB-2	PULASKI	92	22

CONTRACT NO. 78454

ILLINOIS FED. AID PROJECT

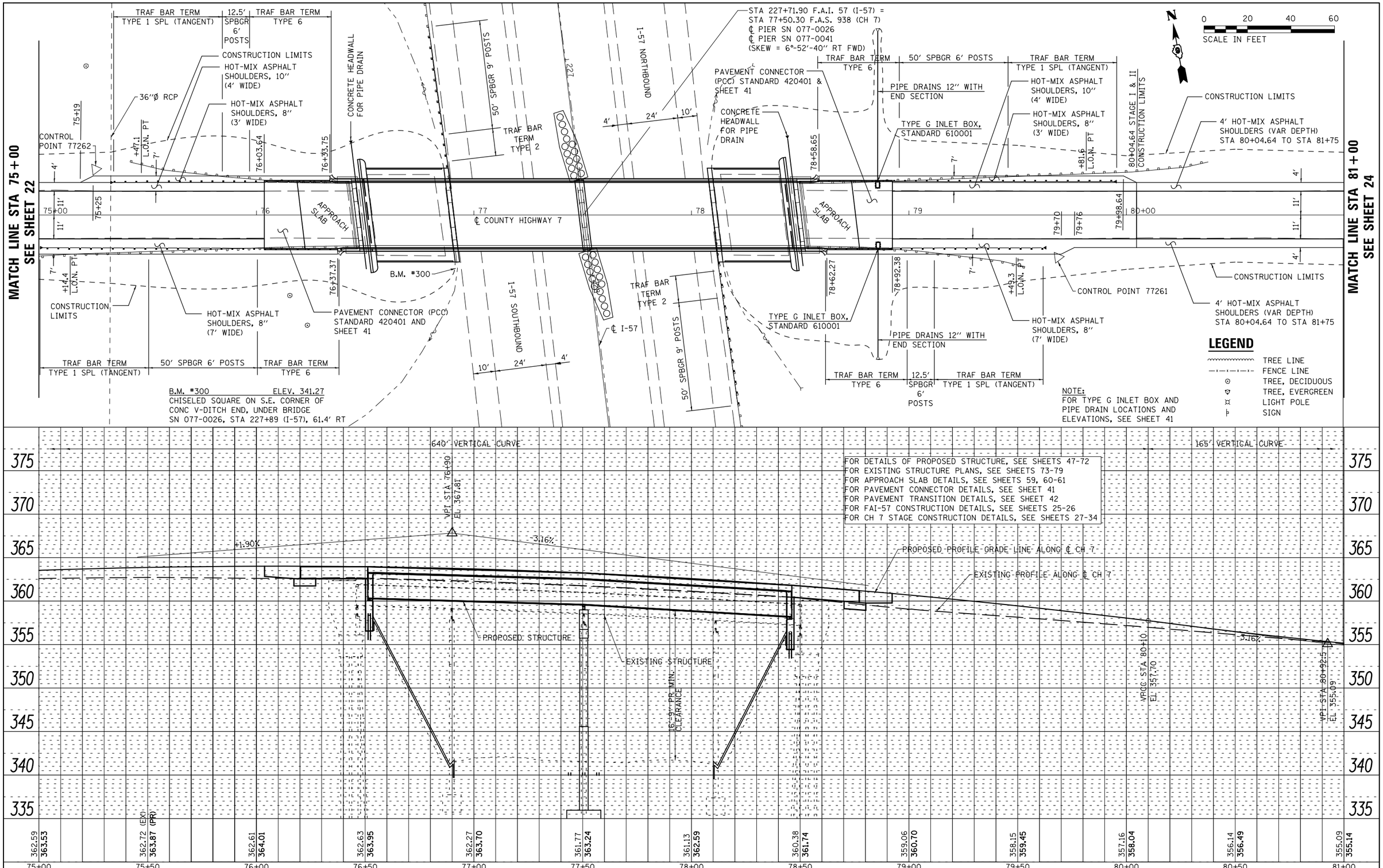

PLAN	BY	DATE
SURVEYED		
PLOTTED		
ALIGNMENT CHECKED		
RT. OF WAY CHECKED		
CADD FILE NAME		
NOTE BOOK NO.		

PROFILE	BY	DATE
SURVEYED		
PLOTTED		
GRADES CHECKED		
BRIDGE NOTES CHKD		
STRUCTURE NOTATNS CHKD		
NOTE BOOK NO.		

ESCA CONSULTANTS, INC.
HIGH & CONSTRUCTION ENGINEERS

USER NAME = kjk	DESIGNED - JHM	REVISED -
ESCA PROJECT 1259.09	DRAWN - JHM	REVISED -
PLOT SCALE = 40.0000 ' / in.	CHECKED - JMS	REVISED -
PLOT DATE = 12/11/2018	DATE - 08/18	REVISED -

STATE OF ILLINOIS
DEPARTMENT OF TRANSPORTATION

FAS 938 (CH-7) PLAN AND PROFILE

SCALE: AS SHOWN | SHEET 2 OF 3 SHEETS | STA. 75+00 TO STA. 81+00

F.A.I. RTE.	SECTION	COUNTY	TOTAL SHEETS	SHEET NO.
57	(77-1-3)HB-2	PULASKI	92	23

CONTRACT NO. 78454

ILLINOIS FED. AID PROJECT

LEGEND

- TREE LINE
- FENCE LINE
- TREE, DECIDUOUS
- TREE, EVERGREEN
- LIGHT POLE
- SIGN

MATCH LINE STA 81+00
SEE SHEET 23

HOT-MIX ASPHALT SHOULDERS, 10'' (VARIABLE WIDTH)

CONSTRUCTION LIMITS

4' HOT-MIX ASPHALT SHOULDERS (VAR DEPTH) STA 80+04.64 TO STA 81+75

I-57 NB ENTRANCE RAMP C

HMA

SIGN

7'-8''S x 7'-0''R TRIPLE BARREL BOX CULVERT

PRIVATE DRIVE

EXISTING ROW LINE

EX ROW 70' & VARIES

EX CURVE UR2
PI STA = 86+09.96
Δ = 5° 41' 24'' (LT)
D = 0° 52' 00''
R = 6,611.93'
T = 328.58'
L = 656.62'
E = 8.16'
PC STA = 82+81.38
PT STA = 89+38.00

PC STA 82+81.38

4' 11' 11' 4'

81 82 83 84 85+00 86

CONC
℄ COUNTY HIGHWAY 7

HMA

END ROADWAY IMPROVEMENTS
STATION 81+75
SAW CUT PAVEMENT
FULL DEPTH

4' HOT-MIX ASPHALT SHOULDERS (VAR DEPTH) STA 80+04.64 TO STA 81+75

SIGN

CONSTRUCTION LIMITS

HOT-MIX ASPHALT SHOULDERS, 10'' (VARIABLE WIDTH)

I-57 NB EXIT RAMP B

COUNTY HIGHWAY 14

EX ROW 80' & VARIES

PI STA 86+09.96

EX ROW 70'

EXISTING ROW LINE

B.M. #300 ELEV. 341.27
CHISELED "L" ON S.E. CORNER OF CONC. V-DITCH END, UNDER BRIDGE SN 077-0026, STA. 227+89, 61.4' RT.

FOR STAGE CONSTRUCTION DETAILS, SEE SHEETS 27-34
FOR PAVEMENT TRANSITION DETAILS, SEE SHEET 42

N

0 20 40 60
SCALE IN FEET

165' VERTICAL CURVE

370 365 360 355 350 345 340 335 330

PROPOSED PROFILE GRADE LINE ALONG ℄ CH 7

EXISTING PROFILE ALONG ℄ CH 7

-1.98%

VPI STA 81+75
EL 353.46

355.09 355.14 354.01 (EX) 353.98 (PR) 353.46 (EX) 353.46 (PR) 352.90 351.95 351.01 350.22 349.39 348.22 347.41

81+00 81+50 81+75 82+00 82+50 83+00 83+50 84+00 84+50 85+00

PLAN		BY	DATE
SURVEYED			
PLOTTED			
ALIGNMENT CHECKED			
RT. OF WAY CHECKED			
CADD FILE NAME			
NOTE BOOK NO.			

PROFILE		BY	DATE
SURVEYED			
PLOTTED			
GRADES CHECKED			
BM. NOTED			
STRUCTURE NOTATNS CHKD			
NOTE BOOK NO.			

ESCA CONSULTANTS, INC.
CIVIL • STRUCTURAL • ENVIRONMENTAL

USER NAME = kjk	DESIGNED - JHM	REVISED -
ESCA PROJECT 1259.09	DRAWN - JHM	REVISED -
PLOT SCALE = 40.0000 ' / in.	CHECKED - JMS	REVISED -
PLOT DATE = 12/11/2018	DATE - 08/18	REVISED -

STATE OF ILLINOIS
DEPARTMENT OF TRANSPORTATION

FAS 938 (CH-7) PLAN AND PROFILE

SCALE: AS SHOWN | SHEET 3 OF 3 SHEETS | STA. 81+00 TO STA. 85+00

F.A.I. RTE.	SECTION	COUNTY	TOTAL SHEETS	SHEET NO.
57	(77-1-3)HB-2	PULASKI	92	24

CONTRACT NO. 78454

ILLINOIS FED. AID PROJECT

B.M. #301 ELEV. 357.85
CHISELED SQUARE ON SOUTH SIDE OF
CONC FOUNDATION OF A SIGN (SOUTH LEG)
"I-57 SOUTH CAIRO", STA. 73+30, 34.7' LT

0 20 40 60
SCALE IN FEET

B.M. #300 ELEV. 341.27
CHISELED SQUARE ON S.E. CORNER OF
CONC V-DITCH END, UNDER BRIDGE
SN 077-0026, STA 227+89, 61.4' RT

B.M. #300

EXISTING GUARDRAIL TO REMAIN IN PLACE

10'
24'
4'
HMA
I-57 SOUTHBOUND
I-57 NORTHBOUND
℄ FAI-57
CONTROL POINT 77263
GRASS
INLET BOX
END SECTION
232
231
230+00
229
228
227
℄ EX PIER 077-0026
℄ PR PIER 077-0041
(SKEW = 6°-52'-40" RT FWD)
℄ CH 7
TY 2
TBT
50' SPBGR TY A
9' POSTS
75' GUARDRAIL REMOVAL
STA 227+71.90 (F.A.I. 57) =
STA 77+50.30 (F.A.S. 938)
80' GUARDRAIL REMOVAL
EXISTING GUARDRAIL TO REMAIN IN PLACE
EXISTING ATTENUATORS & BASE
TO BE REMOVED AND REPLACED
TYPICAL BOTH SIDES OF PIER
SEE STANDARD 643001 AND SHEET 43

MATCH LINE STA 226+50
SEE SHEET 26

LEGEND

- TREE LINE
- TREE, DECIDUOUS
- TREE, EVERGREEN
- LIGHT POLE
- SIGN

FOR DETAILS OF PROPOSED STRUCTURE, SEE SHEETS 47-72
FOR EXISTING STRUCTURE PLANS, SEE SHEETS 73-79
FOR CH 7 CONSTRUCTION DETAILS, SEE SHEETS 22-24
FOR DETAILS OF PROPOSED IMPACT ATTENUATORS, SEE SHEET 43

PLAN
NOTE BOOK NO.
SURVEYED
PLOTTED
ALIGNMENT CHECKED
RT. OF WAY CHECKED
CADD FILE NAME
BY
DATE

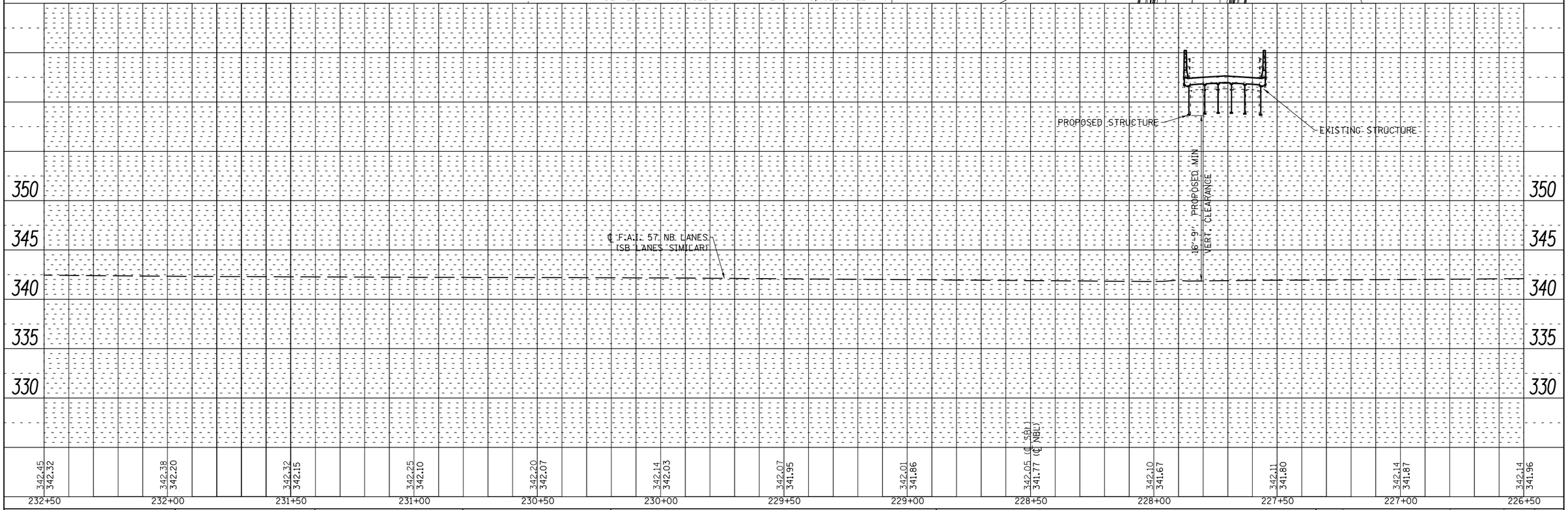

PROFILE
NOTE BOOK NO.
SURVEYED
PLOTTED
DRAWN BY
CHECKED
BM. NOTED
STRUCTURE NOTATNS CHKD
BY
DATE

ESCA CONSULTANTS, INC.
PLAN & ENVIRONMENTAL ENGINEERS

USER NAME = kjk	DESIGNED - JHM	REVISED -	
ESCA PROJECT NO. 1259.09	DRAWN - JHM	REVISED -	
PLOT SCALE = 40.0000 ' / in.	CHECKED - JMS	REVISED -	
PLOT DATE = 12/11/2018	DATE - 08/18	REVISED -	

STATE OF ILLINOIS
DEPARTMENT OF TRANSPORTATION

I-57 PLAN AND PROFILE

SCALE: AS SHOWN | SHEET 1 OF 2 SHEETS | STA. 232+50 TO STA. 226+50

F.A.I RTE.	SECTION	COUNTY	TOTAL SHEETS	SHEET NO.
57	(77-1-3)HB-2	PULASKI	92	25

CONTRACT NO. 78454
ILLINOIS FED. AID PROJECT

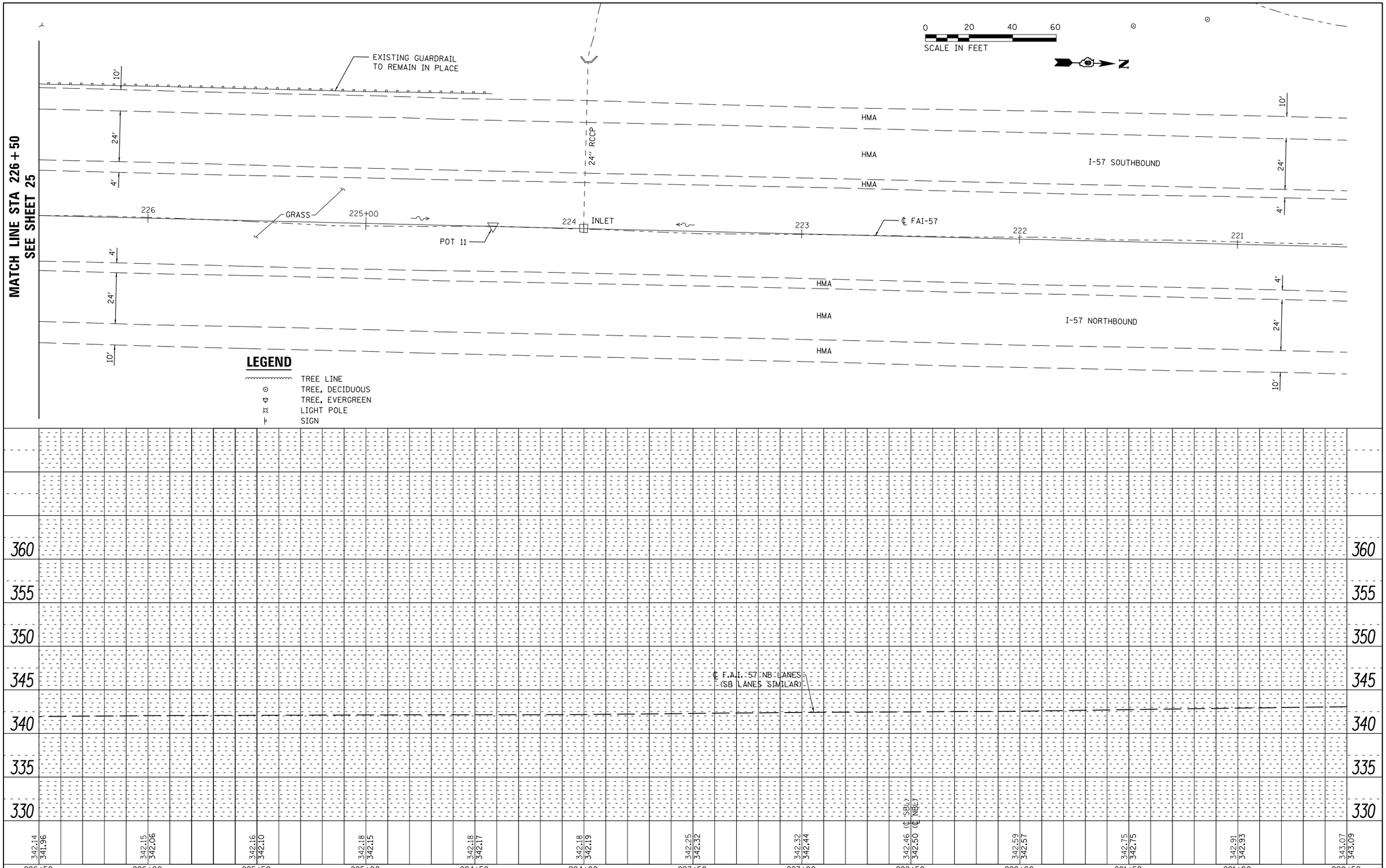

PLAN
NOTE BOOK NO.
SURVEYED
PLOTTED
ALIGNMENT CHECKED
RT. OF WAY CHECKED
CADD FILE NAME
BY
DATE

PROFILE
NOTE BOOK NO.
SURVEYED
PLOTTED
GRADES CHECKED
BRK. NOTED
STRUCTURE NOTATNS CHKD
BY
DATE

ESCA CONSULTANTS, INC.
PLAN & STRUCTURAL ENGINEERS

USER NAME = kjk	DESIGNED - JHM	REVISED -
ESCA PROJECT NO. 1259.09	DRAWN - JHM	REVISED -
PLOT SCALE = 40.0000 ' / in.	CHECKED - JMS	REVISED -
PLOT DATE = 12/11/2018	DATE - 08/18	REVISED -

STATE OF ILLINOIS
DEPARTMENT OF TRANSPORTATION

I-57 PLAN AND PROFILE

SCALE: AS SHOWN | SHEET 2 OF 2 SHEETS | STA. 226+50 TO STA. 220+50

F.A.I RTE.	SECTION	COUNTY	TOTAL SHEETS	SHEET NO.
57	(77-1-3)HB-2	PULASKI	92	26

CONTRACT NO. 78454

ILLINOIS FED. AID PROJECT

SCHEDULE OF QUANTITIES

TEMPORARY CONCRETE BARRIER

STATION, O/S	TO	STATION, O/S	FEET
74+19.12, 6.3' LT		74+93.64, 3.0' RT	75.0
80+05.64, 3.0' RT		80+80.17, 6.3' LT	75.0
			150.0

PINNING TEMPORARY CONCRETE BARRIER

STATION	TO	STATION	TYPE	EACH
74+56.14		74+93.64	TRANSITION	6
80+05.64		80+43.14	TRANSITION	6
			STAGE I TOTAL	12

STEEL RAILING (TEMPORARY)

STATION, O/S	TO	STATION, O/S	FEET
74+93.64, 3.0' RT		80+05.64, 3.0' RT	512.0
		TOTAL	512.0

TEMPORARY BRIDGE TRAFFIC SIGNALS - 1 EACH

IMPACT ATTENUATORS, TEMPORARY (NON-REDIRECTIVE, NARROW), TEST LEVEL 3 - 2 EACH

TRAFFIC BARRIER TERMINAL, TYPE 11 - 2 EACH

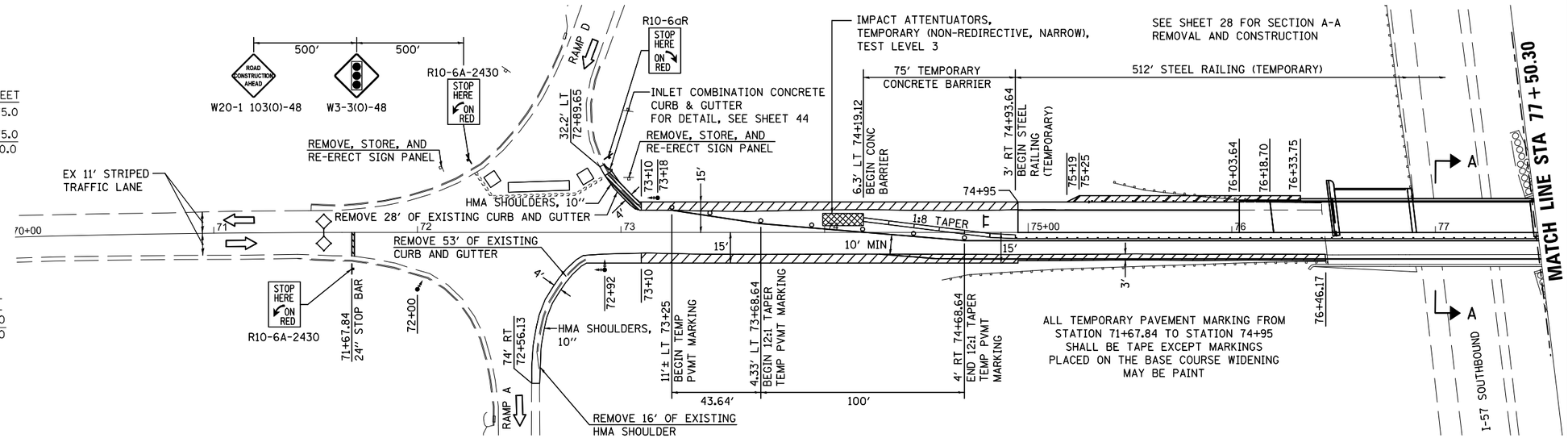

STAGE I PLAN

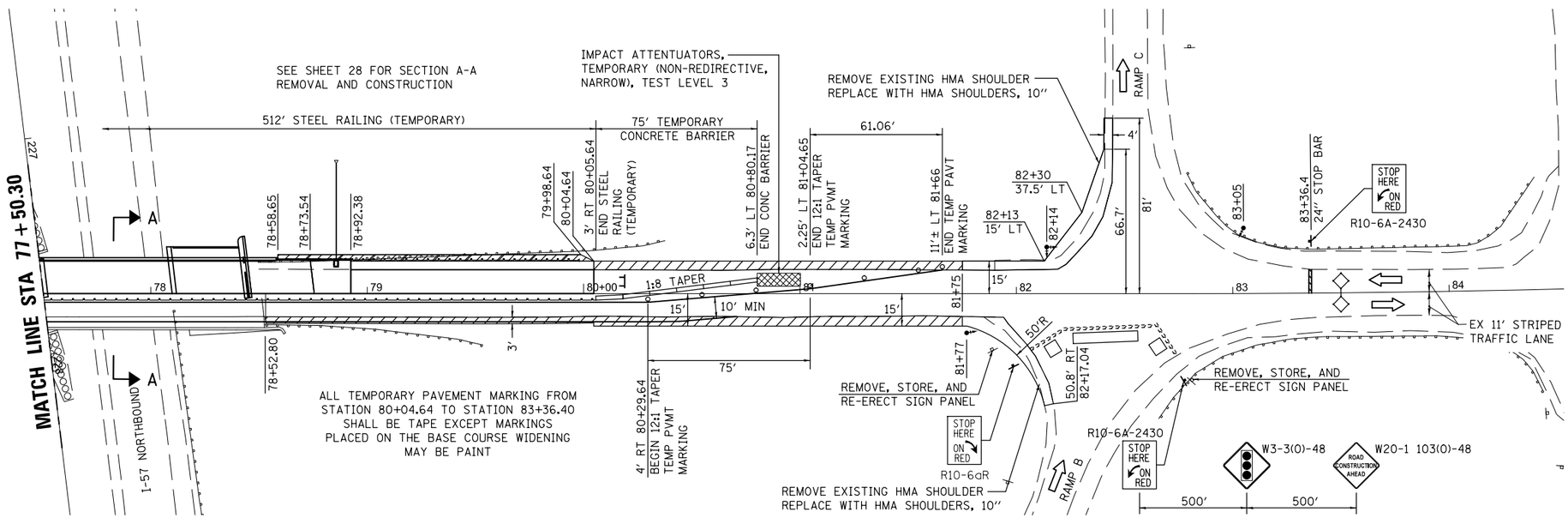

STAGE I PLAN

30 0 30 60
SCALE IN FEET

N

LEGEND

- DIRECTION OF TRAFFIC
- TRAFFIC SIGNAL WITH BACKPLATE, SIGNAL DIRECTION INDICATED
- DETECTOR LOOP
- DRUM WITH STEADY BURNING BI-DIRECTIONAL LIGHT
- TYPE III BARRICADE WITH FLASHING LIGHTS
- BASE COURSE WIDENING 10"
- HMA SHOULDERS 8"
- HMA SHOULDERS 10"
- PCC PAVEMENT 10" (JOINTED)
- PAVEMENT CONNECTOR (PCC) FOR BRIDGE APPROACH SLAB
- BRIDGE APPROACH SLAB
- CAST IN PLACE CONCRETE BRIDGE SLAB

PRINT DRIVER = L:PD_E_B_B_W_Inf9
PEN TABLE = IDOT_VERBOS.tbl
PLOT NAME = 78454-sht-stagingdt.dgn
FILE NAME = D:\78454-sht-stagingdt.dgn

ESCA CONSULTANTS, INC.

USER NAME = k.jk	DESIGNED - JHM	REVISED -	
ESCA PROJECT NO. 1295.09	DRAWN - JHM	REVISED -	
PLOT SCALE = 0.1667 ' / in.	CHECKED - JMS	REVISED -	
PLOT DATE = 12/11/2018 7:58:14 AM	DATE - 12/18	REVISED -	

STATE OF ILLINOIS
DEPARTMENT OF TRANSPORTATION

FAS 938 (CH 7) STAGE CONSTRUCTION DETAILS

SCALE: AS SHOWN | SHEET NO. 1 OF 8 SHEETS | STA. 71+00 TO STA. 83+00

F.A.I. RTE.	SECTION	COUNTY	TOTAL SHEETS	SHEET NO.
57	(77-1-3)HB-2	PULASKI	92	27
		CONTRACT NO. 78454		

FED. ROAD DIST. NO. | ILLINOIS | FED. AID PROJECT

PRE STAGE I & STAGE I GENERAL NOTES

1. PRE-STAGE 1: CONSTRUCT THE BASE COURSE WIDENING 10" RT STA 73+10 TO RT STA 76+46; RT STA 78+53 TO RT STA 81+75; LT STA 73+10 TO LT STA 74+95; AND LT STA 80+04.64 TO LT STA 81+75. THE HMA SHOULDERS 10" SHOWN AT THE FOUR LOCATIONS ON THE STAGE I PLAN DETAIL AT THE RAMP INTERSECTIONS WITH COUNTY HIGHWAY 7 SHALL ALSO BE CONSTRUCTED. THE EXISTING DEBRIS AND AGGREGATE SHALL BE REMOVED FROM THE TOP OF THE BRIDGE DECK WITHIN THE AREA OF THE STAGE I TRAFFIC LANE. THE COST ASSOCIATED WITH THIS REMOVAL WILL NOT BE PAID FOR SEPARATELY, BUT WILL BE INCLUDED IN THE COST OF THE BASE COURSE WIDENING 10". TEMPORARY REPAIR OR PATCHING OF THE EXISTING BRIDGE DECK FOR STAGE I TRAFFIC, IF NEEDED AND DIRECTED BY THE ENGINEER, WILL BE PAID FOR IN ACCORDANCE WITH ARTICLE 109.04 OF THE STANDARD SPECIFICATIONS.

2. TRAFFIC CONTROL SHALL BE ERECTED AS SHOWN AND ACCORDING TO TRAFFIC CONTROL AND PROTECTION, STANDARD 701321. SEE STANDARD 701321 FOR COMPLETION OF THE STAGE CONSTRUCTION TRAFFIC CONTROL THAT IS NOT SHOWN ON THIS SHEET, INCLUDING BUT NOT LIMITED TO, ADVANCE SIGNING, ADVANCE LOOP PLACEMENT, DRUMS WITH STEADY BURNING LIGHTS, DOUBLE VERTICAL PANELS AND BARRIER WALL/GUARDRAIL MARKERS.

3. SEE SPECIAL PROVISIONS FOR ADDITIONAL TRAFFIC CONTROL REQUIREMENTS.

4. COORDINATE LOCATION OF SIGNALS WITH THE FINAL WORK AS DIRECTED BY THE ENGINEER.

5. THE SIGNALS FOR RAMPS B AND D TRAFFIC SHALL BE ACTUATED AND RUN ON ONE CONTROLLER. THE ADVANCE LOOPS SHALL BE INSTALLED ON RAMPS B AND D AT LOCATIONS DESIGNATED BY THE ENGINEER.

6. THE CYCLE LENGTH FOR THE PROPOSED SIGNAL SYSTEM AND THE CLEARANCE INTERVAL WILL BE PROVIDED BY THE ENGINEER.

7. THE INTERSECTIONS SHALL BE MONITORED AND THE CYCLE LENGTH AND TIMING ADJUSTED IF PROBLEMS ARE ENCOUNTERED DURING CONSTRUCTION. BACKUPS OF RAMP TRAFFIC ONTO I-57 SHALL BE AVOIDED.

8. THE DIMENSION SHOWN ON THE WIDTH RESTRICTION SIGN (W12-I102(O)-48) SHOWN ON STANDARD 701321 AND ON THE ADVANCE WARNING SIGN (W12-I103) SHOWN ON SHEET 30 SHALL BE 9'-6" FOR STAGE I CONSTRUCTION.

9. THE ADVANCE DETECTOR LOOPS ARE TYPICALLY LOCATED 275 FEET IN ADVANCE OF THE STOP BAR. THE BUREAU OF OPERATIONS SHALL APPROVE THE LOOP LOCATIONS PRIOR TO INSTALLATION.

10. THE CENTERLINE PAVEMENT MARKING SHALL BE REMOVED FROM THE STOP BAR TO THE SAND ATTENUATORS OR DRUMS. EDGE LINE PAVEMENT MARKING SHOULD BE REMOVED IF A 10 FT LANE WIDTH CANNOT BE MAINTAINED. TEMPORARY EDGE LINES SHOULD BE INSTALLED WHEN THE EDGE LINES ARE REMOVED.

11. TEMPORARY RUMBLE STRIPS SHOWN ON STANDARD 701321 WILL NOT BE REQUIRED.

12. STAGE I CONSTRUCTION SHALL INCLUDE COMPLETION OF THE EARTHWORK, PCC PAVEMENT, SUBBASE, HMA SHOULDERS, GUARDRAIL AND TRAFFIC BARRIER TERMINALS FROM LT STA 74+96 TO LT STA 80+04.64 AS REFERENCED ON SHEET 27 AND DESCRIBED IN DETAIL ON THE PLAN AND PROFILE SHEETS.

13. THE TEMPORARY CONCRETE BARRIER SHALL BE PINNED AS SPECIFIED IN SECTION 704 OF THE STANDARD SPECIFICATIONS. THE STEEL RAILING (TEMPORARY) SHALL BE CONSTRUCTED ACCORDING TO SHEET NO. 53 OF THE PLANS AND SECTION 509 OF THE STANDARD SPECIFICATIONS.

14. THE STEEL RAILING (TEMPORARY) SHALL BE CONNECTED TO THE TEMPORARY CONCRETE BARRIER AT STA 74+93.64 AND 80+05.64 WITH A TRAFFIC BARRIER TERMINAL TYPE 11. SEE STANDARD 631051 FOR DETAILS.

15. A TEMPORARY PATCH WILL BE REQUIRED AT THE ENDS OF THE PROPOSED PAVEMENT ON STAGE I AND STAGE II IF THE EXISTING PAVEMENT IS REMOVED BEYOND THE LIMITS OF THE NEW PAVEMENT CONSTRUCTION TO ALLOW FOR AN END FORM. THE COST OF THE TEMPORARY PATCH WILL NOT BE PAID FOR SEPARATELY BUT WILL BE INCLUDED IN THE COST OF THE TYPE OF PAVEMENT BEING CONSTRUCTED.

16. TEMPORARY RAMPS SHALL BE CONSTRUCTED AT LOCATIONS SHOWN ON THE STAGE II PLAN DETAIL PRIOR TO STAGE II CONSTRUCTION. THE TOP WIDTH OF THE RAMP WILL EXTEND 1 FOOT BEYOND THE BACK OF THE TEMPORARY CONCRETE BARRIER LOCATION BEFORE TAPERING ON A 1:1 TO THE EXISTING PAVEMENT. TACK COAT SHALL BE APPLIED TO THE PAVEMENT SURFACE PRIOR TO CONSTRUCTING THE RAMP. THIS WORK WILL BE PAID IN ACCORDANCE WITH ARTICLE 406.13 AND 406.14 OF THE STANDARD SPECIFICATIONS, EXCEPT THE TACK COAT WILL BE CONSIDERED INCLUDED IN THE CONTRACT UNIT BID PRICE PER SQUARE YARD FOR THE TEMPORARY RAMP.

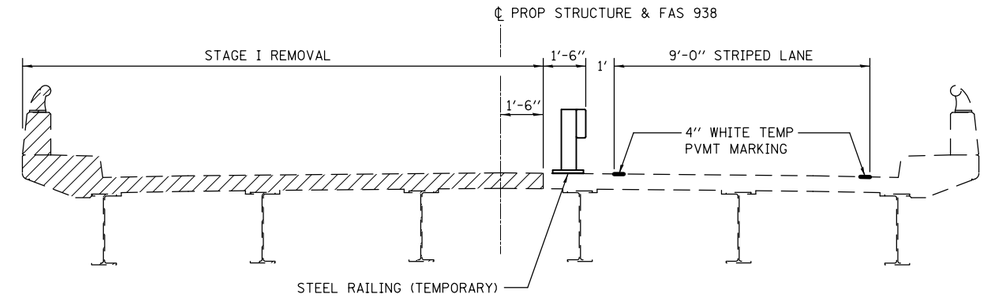

NOTE: A TEMPORARY SUPPORT SYSTEM WILL BE INSTALLED ON THE SOUTH SIDE OF EXISTING PIER 2 (CENTER PIER) PRIOR TO STAGE I PIER REMOVAL. SEE SHEET 51 FOR PIER STAGE CONSTRUCTION DETAILS.

SECTION A–A BRIDGE REMOVAL

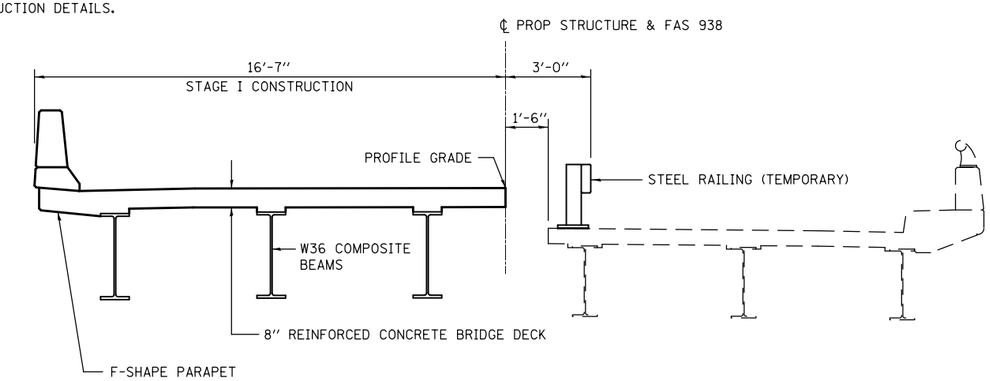

SECTION A–A BRIDGE CONSTRUCTION

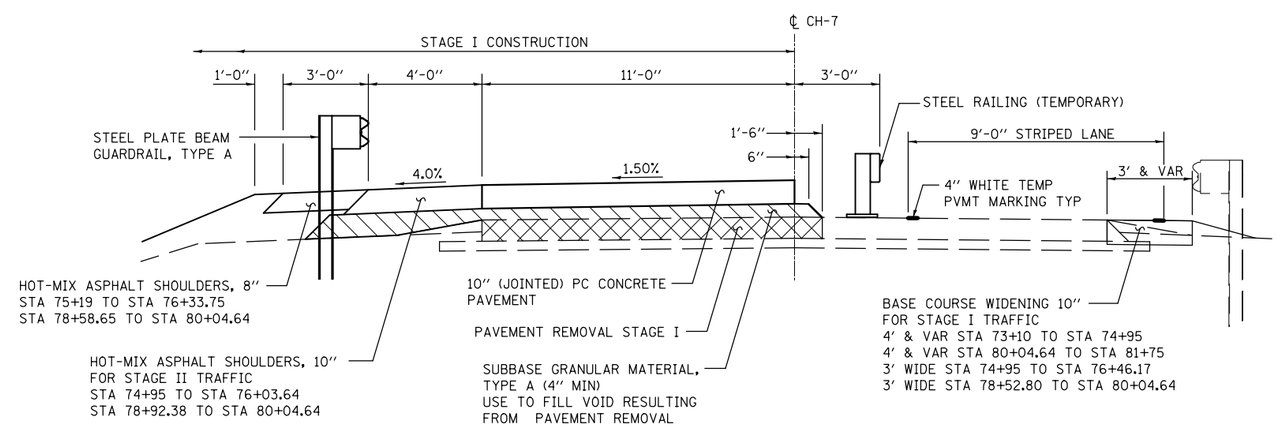

SUBBASE GRANULAR MATERIAL, TYPE A

PAVEMENT REMOVAL

STAGE I ROADWAY
STA 74+95 TO STA 76+03.64
STA 78+92.38 TO STA 80+04.64

SCHEDULE OF QUANTITIES

RELOCATE TEMPORARY CONCRETE BARRIER

STATION, O/S	TO	STATION, O/S	FEET
74+25.59, 4.78' RT		75+00.32, 2.38' LT	75.0
80+00.32, 2.38' LT		80+75.05, 4.77' RT	75.0
		TOTAL	150.0

TEMPORARY CONCRETE BARRIER

STATION, O/S	TO	STATION, O/S	FEET
75+00.32, 2.38' LT		80+00.32, 2.38' LT	500.0
		TOTAL	500.0

PINNING TEMPORARY CONCRETE BARRIER

STATION	TO	STATION	TYPE	EACH
74+50.32		74+87.20	TRANSITION	6
80+12.82		80+50.32	TRANSITION	6
			STAGE II TOTAL	12

IMPACT ATTENUATORS, RELOCATE (NON-REDIRECTIVE, NARROW) TEST LEVEL 3 - 2 EACH

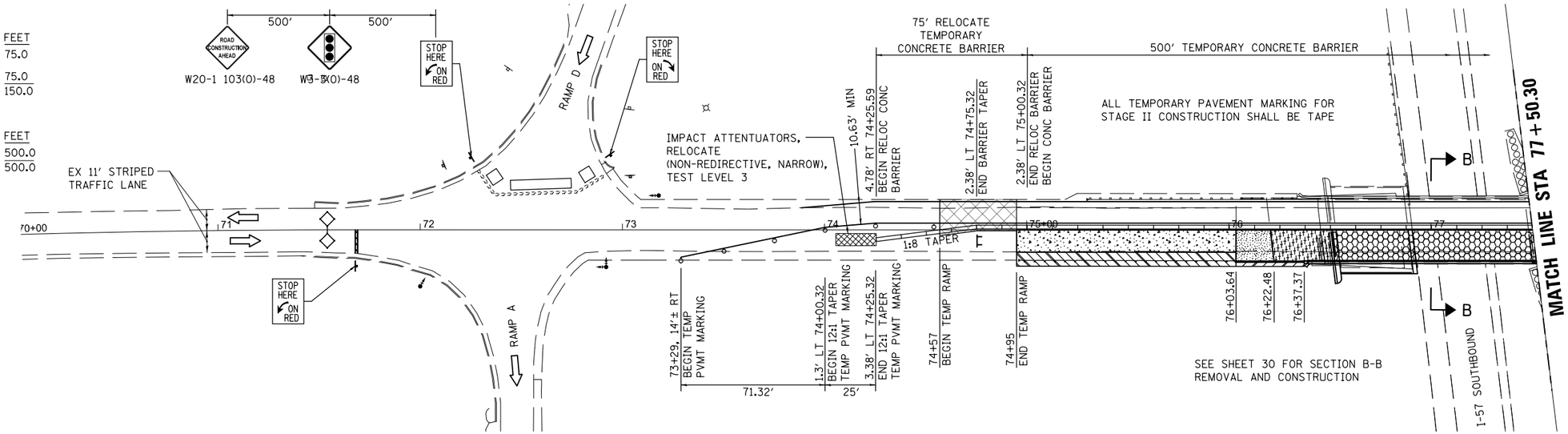

STAGE II PLAN

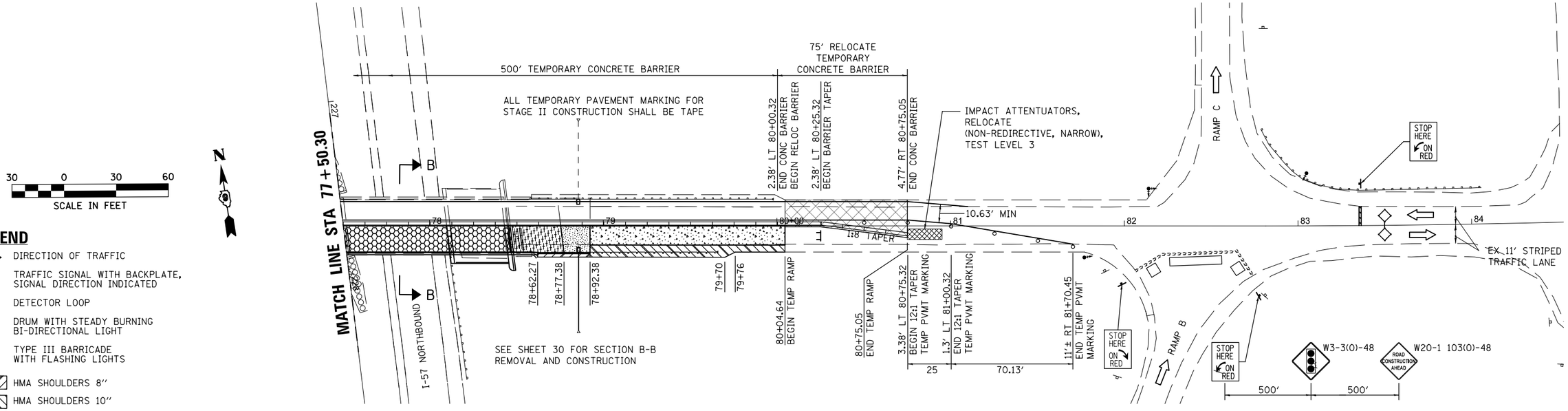

STAGE II PLAN

30 0 30 60
SCALE IN FEET

N

LEGEND

- DIRECTION OF TRAFFIC
- TRAFFIC SIGNAL WITH BACKPLATE, SIGNAL DIRECTION INDICATED
- DETECTOR LOOP
- DRUM WITH STEADY BURNING BI-DIRECTIONAL LIGHT
- TYPE III BARRICADE WITH FLASHING LIGHTS
- HMA SHOULDERS 8"
- HMA SHOULDERS 10"
- PCC PAVEMENT 10" (JOINTED)
- PAVEMENT CONNECTOR (PCC) FOR BRIDGE APPROACH SLAB
- BRIDGE APPROACH SLAB
- CAST IN PLACE CONCRETE BRIDGE SLAB
- TEMPORARY RAMP (INSTALLED IN STAGE I)

PRINT DRIVER = LPD_E_B_Color.pltcfg
PEN TABLE = DOT_VERSCAL.tbl
PAGE SIZE = 24.00X36.00
FILE NAME = D:\78454-sht-staging-BL.dgn

ESCA CONSULTANTS, INC.

USER NAME = kjk	DESIGNED - JHM	REVISED -	
ESCA PROJECT NO. 1295.09	DRAWN - JHM	REVISED -	
PLOT SCALE = 0.1667 ' / in.	CHECKED - JMS	REVISED -	
PLOT DATE = 12/11/2018 7:58:15 AM	DATE - 11/18	REVISED -	

STATE OF ILLINOIS
DEPARTMENT OF TRANSPORTATION

FAS 938 (CH 7) STAGE CONSTRUCTION DETAILS

SCALE: AS SHOWN | SHEET NO. 3 OF 8 SHEETS | STA. 71+00 TO STA. 83+00

F.A.I. RTE.	SECTION	COUNTY	TOTAL SHEETS	SHEET NO.
57	(77-1-3)HB-2	PULASKI	92	29
		CONTRACT NO. 78454		

FED. ROAD DIST. NO. | ILLINOIS | FED. AID PROJECT

STAGE II GENERAL NOTES

1. TRAFFIC CONTROL SHALL BE ERECTED AS SHOWN AND ACCORDING TO TRAFFIC CONTROL AND PROTECTION, STANDARD 701321. SEE STANDARD 701321 FOR THE COMPLETION OF THE STAGE CONSTRUCTION TRAFFIC CONTROL THAT IS NOT SHOWN THAT INCLUDES, BUT IS NOT LIMITED TO, ADVANCE SIGNING, ADVANCE LOOP PLACEMENT, DRUMS WITH STEADY BURNING LIGHTS, DOUBLE VERTICAL PANELS AND BARRIER WALL/GUARDRAIL MARKERS.

2. SEE SPECIAL PROVISIONS FOR ADDITIONAL TRAFFIC CONTROL REQUIREMENTS.

3. TEMPORARY RUMBLE STRIPS SHOWN ON STANDARD 701321 WILL NOT BE REQUIRED.

4. THE INTERSECTIONS SHALL BE MONITORED AND THE CYCLE LENGTH AND TIMING ADJUSTED IF PROBLEMS ARE ENCOUNTERED DURING CONSTRUCTION. BACKUPS OF RAMP TRAFFIC ONTO I-57 SHALL BE AVOIDED.

5. THE DIMENSION SHOWN ON THE WIDTH RESTRICTION SIGN (W12-I102(O)-48) SHOWN ON STANDARD 701321 AND ON THE ADVANCE WARNING SIGN (W12-I103) SHOWN ON THIS SHEET SHALL BE 11'-0" FOR STAGE II CONSTRUCTION.

6. THE CENTERLINE PAVEMENT MARKING SHALL BE REMOVED FROM THE STOP BAR TO THE SAND ATTENUATORS OR DRUMS. EDGE LINE PAVEMENT MARKING SHOULD BE REMOVED IF A 10 FT LANE WIDTH CANNOT BE MAINTAINED. TEMPORARY EDGE LINES SHOULD BE INSTALLED WHEN THE EDGE LINES ARE REMOVED.

7. THE TEMPORARY SIGNALS SHALL REMAIN IN OPERATION AND THE TEMPORARY BARRIERS SHALL REMAIN IN PLACE UNTIL THE BRIDGE, PCC PAVEMENT 10", PCC PAVEMENT CONNECTOR, APPROACH SLAB, HMA SHOULDERS, GUARDRAIL AND TRAFFIC BARRIER TERMINALS ARE COMPLETE FROM RT STA 74+95 TO RT STA 80+04.64. AFTER COMPLETION OF THE DESIGNATED WORK FROM RT STA 74+95 TO RT STA 80+04.64, THE TEMPORARY SIGNALS WILL BE EITHER REMOVED OR TURNED OFF AND COVERED AND THE TEMPORARY CONCRETE BARRIER REMOVED TO ALLOW COMPLETION OF THE STAGE III AND STAGE IV ROADWAY AS DETAILED ON SHEET NOS. 31 THROUGH 34.

8. THE TEMPORARY CONCRETE BARRIER SHALL BE PINNED AS SPECIFIED IN SECTION 704 OF THE STANDARD SPECIFICATIONS. THE TEMPORARY CONCRETE BARRIER PLACED ON THE PROPOSED PCC PAVEMENT 10", APPROACH SLAB, PCC PAVEMENT CONNECTOR, AND BRIDGE DECK FROM STA 74+95 TO 80+04.64 SHALL BE RESTRAINED USING STEEL RETAINERS 1"x10"x10" SHOWN FOR DETAIL III ON SHEET NO. 52. THE STEEL RETAINERS SHALL BE PLACED ON 6'-0" CENTERS AND SECURED TO THE PAVEMENT BY PLACING TWO EACH 5/8" DIAMETER EXPANSION ANCHORS OR CAST IN PLACE INSERTS AT THE MID-DEPTH OF THE PAVEMENT. THE ANCHORS OR INSERTS SHALL HAVE A MINIMUM PROOF LOAD OF 5,000 POUNDS. THE COST OF PROVIDING THE RESTRAINING SYSTEM FOR THE TEMPORARY CONCRETE BARRIER ON TOP OF THE PCC PAVEMENT 10", APPROACH SLAB, PCC PAVEMENT CONNECTOR, AND BRIDGE DECK WILL NOT BE PAID FOR SEPARATELY BUT SHALL BE CONSIDERED INCLUDED IN THE UNIT PRICE PER FOOT FOR TEMPORARY CONCRETE BARRIER.

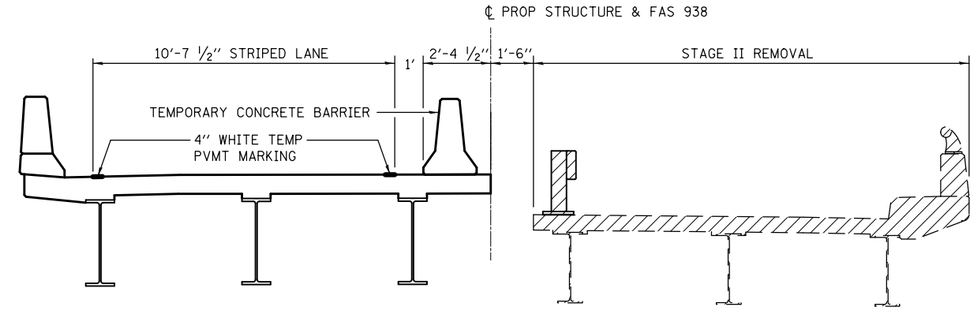

SECTION B–B BRIDGE REMOVAL

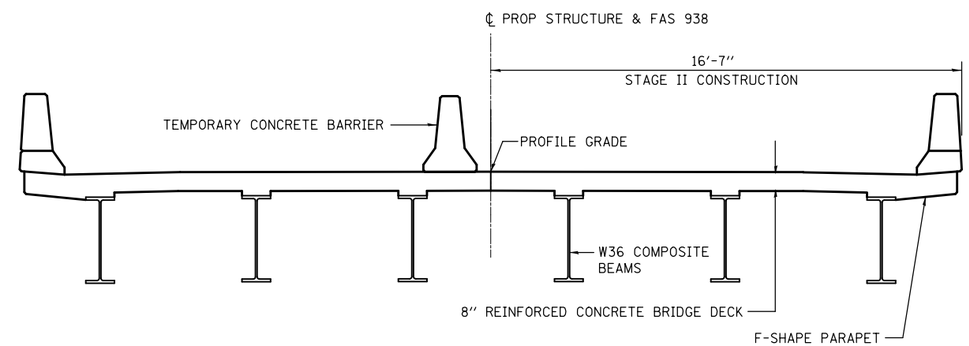

SECTION B–B BRIDGE CONTSTRUCTION

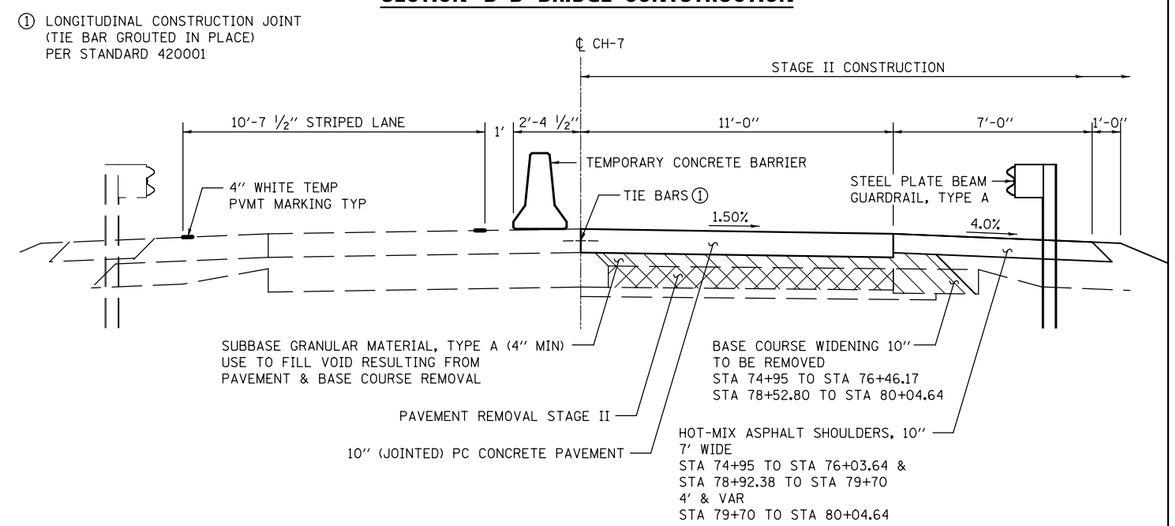

SUBBASE GRANULAR MATERIAL, TYPE A

PAVEMENT REMOVAL

STAGE II ROADWAY
STA 74+95 TO STA 76+03.64
STA 78+92.38 TO STA 80+04.64

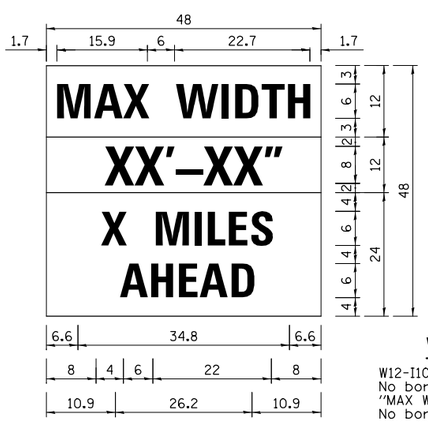

NOTE: THIS SIGN SHALL BE LOCATED AS DIRECTED BY THE ENGINEER. ONE SIGN SHALL BE PROVIDED FOR EACH APPROACH TO THE SITE ON CH 7 AND FOR EACH EXIT RAMP (4 TOTAL).

WIDTH RESTRICTION SIGH

W12–I103

W12-I103 (Width is 8D);
No border, Black on White;
"MAX WIDTH" D;
No border, Black on Orange;
"XX'-XX'" D;
No border, Black on White;
"X MILES" D; "AHEAD" D

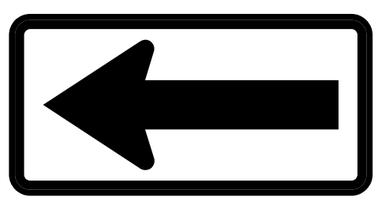

W1–6L(0)–4824

NOTE: THIS SIGN SHALL BE PLACED UNDERNEATH THE WIDTH RESTRICTION SIGNS (W12-I103) THAT ARE PLACED ON THE I-57 EXIT RAMPS (2 TOTAL).

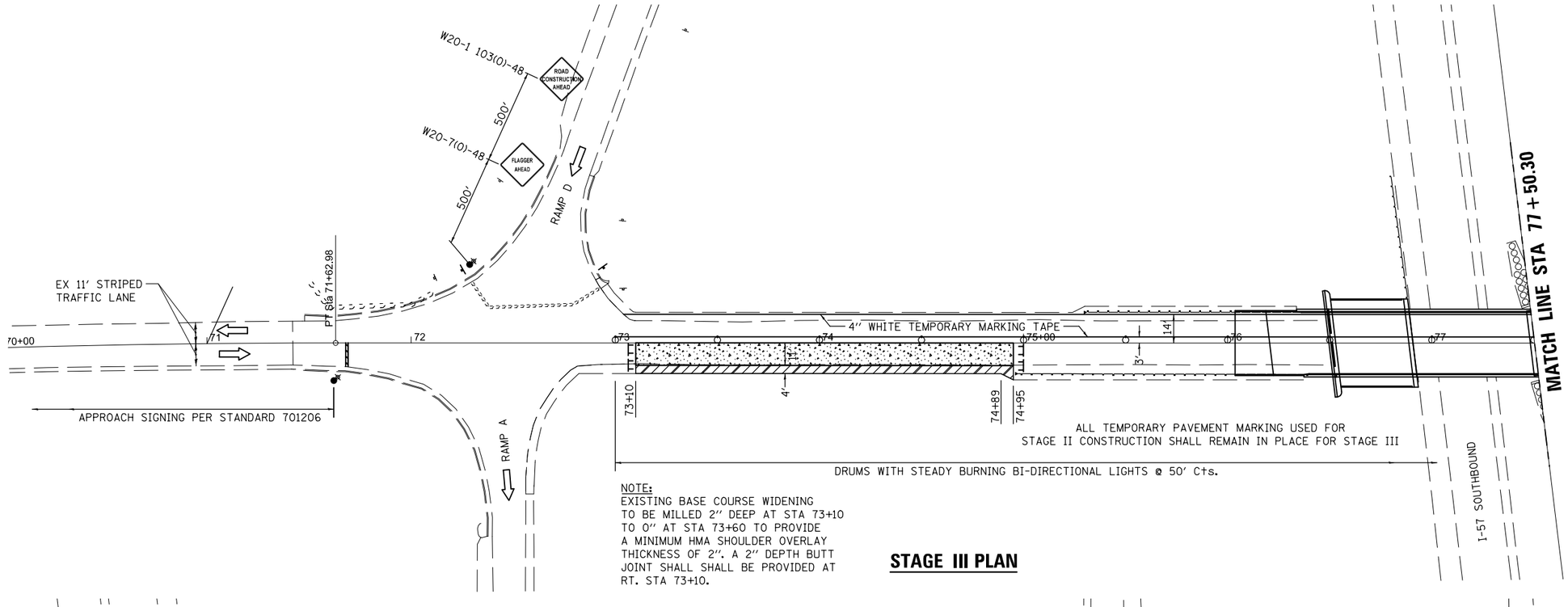

NOTE:
EXISTING BASE COURSE WIDENING TO BE MILLED 2" DEEP AT STA 73+10 TO 0" AT STA 73+60 TO PROVIDE A MINIMUM HMA SHOULDER OVERLAY THICKNESS OF 2". A 2" DEPTH BUTT JOINT SHALL SHALL BE PROVIDED AT RT. STA 73+10.

STAGE III PLAN

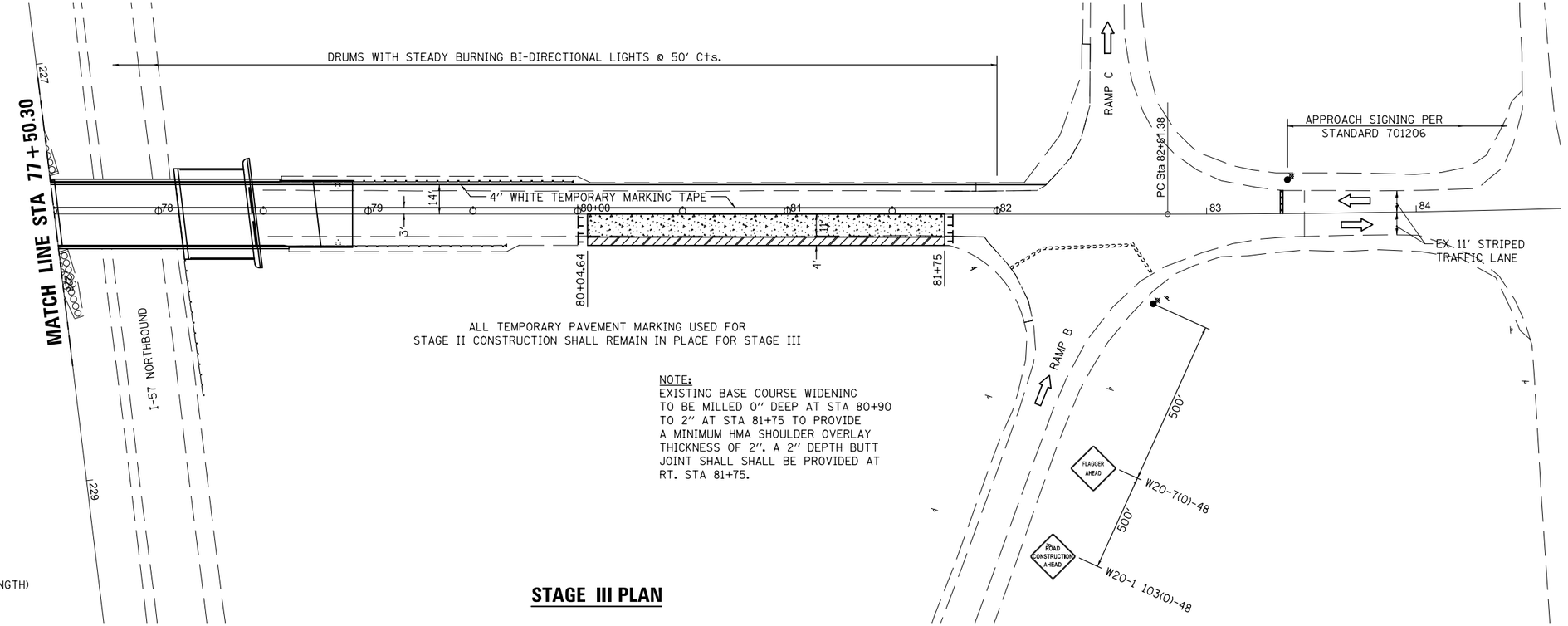

NOTE:
EXISTING BASE COURSE WIDENING TO BE MILLED 0" DEEP AT STA 80+90 TO 2" AT STA 81+75 TO PROVIDE A MINIMUM HMA SHOULDER OVERLAY THICKNESS OF 2". A 2" DEPTH BUTT JOINT SHALL SHALL BE PROVIDED AT RT. STA 81+75.

STAGE III PLAN

30 0 30 60
SCALE IN FEET

N

LEGEND

- DIRECTION OF TRAFFIC
- DRUM WITH STEADY BURNING BI-DIRECTIONAL LIGHT
- TYPE III BARRICADE WITH FLASHING LIGHTS
- FLAGGER WITH TRAFFIC CONTROL SIGN AND OVERHEAD LIGHT SOURCE
- HMA SHOULDERS (VARIABLE DEPTH)
- PCC PAVEMENT 10" (JOINTED) (HIGH-EARLY STRENGTH)

PRINT DRIVER = IDOT.PRL
PEN TABLE = IDOT.TBL
HPGL TABLE = IDOT.HDRC.tbl
PLOT SCALE = 50.0000
FILE NAME = D978454-sht-staging01.dgn

ESCA CONSULTANTS, INC.
CIVIL & STRUCTURAL ENGINEERS

USER NAME = kjk	DESIGNED - JHM	REVISED -	
ESCA PROJECT NO. 1295.09	DRAWN - JHM	REVISED -	
PLOT SCALE = 0.1667 ' / in.	CHECKED - JMS	REVISED -	
PLOT DATE = 12/11/2018 7:58:16 AM	DATE - 08/18	REVISED -	

STATE OF ILLINOIS
DEPARTMENT OF TRANSPORTATION

FAS 938 (CH 7) STAGE CONSTRUCTION DETAILS

SCALE: AS SHOWN | SHEET NO. 5 OF 8 SHEETS | STA. 71+00 TO STA. 83+00

F.A.I. RTE.	SECTION	COUNTY	TOTAL SHEETS	SHEET NO.
57	(77-1-3)HB-2	PULASKI	92	31
		CONTRACT NO. 78454		

FED. ROAD DIST. NO. | ILLINOIS | FED. AID PROJECT

STAGE III GENERAL NOTES

1. TRAFFIC CONTROL STANDARD 701206 SHALL BE USED FOR STAGE III AND STAGE IV ROADWAY WORK. THE TRAFFIC CONTROL SHALL REMAIN IN PLACE FROM THE START OF STAGE III UNTIL THE WORK IN STAGE IV IS COMPLETE. ROAD CONSTRUCTION AHEAD AND FLAGGER AHEAD SIGNS SHALL BE PROVIDED FOR BOTH THE RAMP B AND RAMP D TRAFFIC. TRAFFIC CONTROL STANDARD 701206 SHALL BE USED TO CLOSE ONE LANE FROM STA 73+10 TO STA 81+75 AND FLAGGERS SHALL BE PRESENT AT ALL TIMES. NIGHT TIME WORK ZONE LIGHTING SHALL BE USED AND THE FLAGGER STATIONS WILL BE ILLUMINATED BY AN OVERHEAD LIGHT SOURCE IN ACCORDANCE WITH ARTICLE 701.13. THE TWO FLAGGERS SHOWN ON STANDARD 701206 SHALL BE PROVIDED AND A FLAGGER SHALL ALSO BE POSITIONED AT BOTH RAMP B AND RAMP D. A TOTAL OF FOUR FLAGGERS WILL BE REQUIRED AT ALL TIMES AND THEY SHALL BE IN DIRECT COMMUNICATION WITH ONE ANOTHER. DRUMS WITH BI-DIRECTIONAL STEADY BURN LIGHTS SHALL BE USED ON 50-FOOT CENTERS THROUGH THE TANGENT AREA.

2. THE STAGE III ROADWAY WORK SHALL BEGIN AFTER THE COMPLETION OF THE STAGE II CONSTRUCTION FROM RT STA 74+95 TO RT STA 80+04.64. PRIOR TO SHUTTING OFF THE TEMPORARY SIGNALS AND REMOVING THE TEMPORARY CONCRETE BARRIERS, TRAFFIC CONTROL STANDARD 701206 SHALL BE IN PLACE AND THE FLAGGERS PROVIDED. THE TEMPORARY BARRIERS WILL BE REPLACED BY DRUMS WITH BI-DIRECTIONAL STEADY BURN LIGHTS PLACED ON 50-FOOT CENTERS THROUGH THE TANGENT AREA. THE STAGE III ROADWAY WORK SHALL BE IN THE EASTBOUND LANE OF COUNTY HIGHWAY 7 FROM RT STA 73+10 TO RT STA 74+95 AND FROM RT STA 80+04.64 TO RT STA 81+75 AND INCLUDES THE REMOVAL OF THE EXISTING PAVEMENT; PLACEMENT OF SUBBASE GRANULAR . MATERIAL; CONSTRUCTING THE PC CONCRETE PAVEMENT 10"; AND CONSTRUCTING THE HMA SHOULDERS ADJACENT TO THE NEW PAVEMENT.

3. THE EXISTING BASE COURSE WIDENING 10" SHALL BE SAWED FULL DEPTH AND PARTIALLY REMOVED TO PROVIDE A MINIMUM 11-FOOT PAVEMENT WIDTH FROM CENTERLINE TO THE PROPOSED EDGE OF PAVEMENT FROM RT STA 73+10 TO 74+95 AND FROM RT STA 80+04.64 TO 81+75. THE PROPOSED TOP OF PAVEMENT WILL BE A VARYING HEIGHT ABOVE THE TOP OF THE EXISTING BASE COURSE WIDENING. THE FORMWORK FOR THE PROPOSED PAVEMENT SHALL BE EITHER CONSTRUCTED TO A VARIABLE HEIGHT ABOVE THE EXISTING BASE COURSE WIDENING TO MEET THE PLAN ELEVATIONS OR THE BASE COURSE WIDENING SHALL BE REMOVED TO AN ADDITIONAL MINIMUM WIDTH OF 4 INCHES TO ALLOW FORMWORK FOR THE PROPOSED PAVEMENT ACCORDING TO THE DETAILS ON STANDARD 442101 (CLASS B PATCHING). THE VOID CREATED BY THE REMOVAL OF THE ADDITIONAL BASE COURSE WIDENING TO ALLOW FOR THE FORMWORK SHALL BE FILLED WITH HMA SHOULDER MATERIAL AFTER COMPLETION OF THE PROPOSED PAVEMENT AND FORM REMOVAL.

4. THE ADVANCE WIDTH RESTRICTION WARNING SIGNS ERECTED FOR STAGE II SHALL REMAIN IN PLACE FOR STAGE III AND STAGE IV ROADWAY WORK. THE DIMENSION SHOWN ON THE WIDTH RESTRICTION SIGNS SHALL BE 11'- 0".

5. THE P.C. CONCRETE PAVEMENT CONSTRUCTED UNDER STAGE III AND STAGE IV SHALL BE 10" JOINTED HIGH-EARLY STRENGTH P.C. CONCRETE PAVEMENT. THE CONCRETE MIXTURE SHALL USE A CLASS PP CONCRETE CRITERIA AND SHALL BE CONSTRUCTED ACCORDING TO THE SPECIAL PROVISION FOR HIGH-EARLY STRENGTH PORTLAND CEMENT CONCRETE PAVEMENT 10".

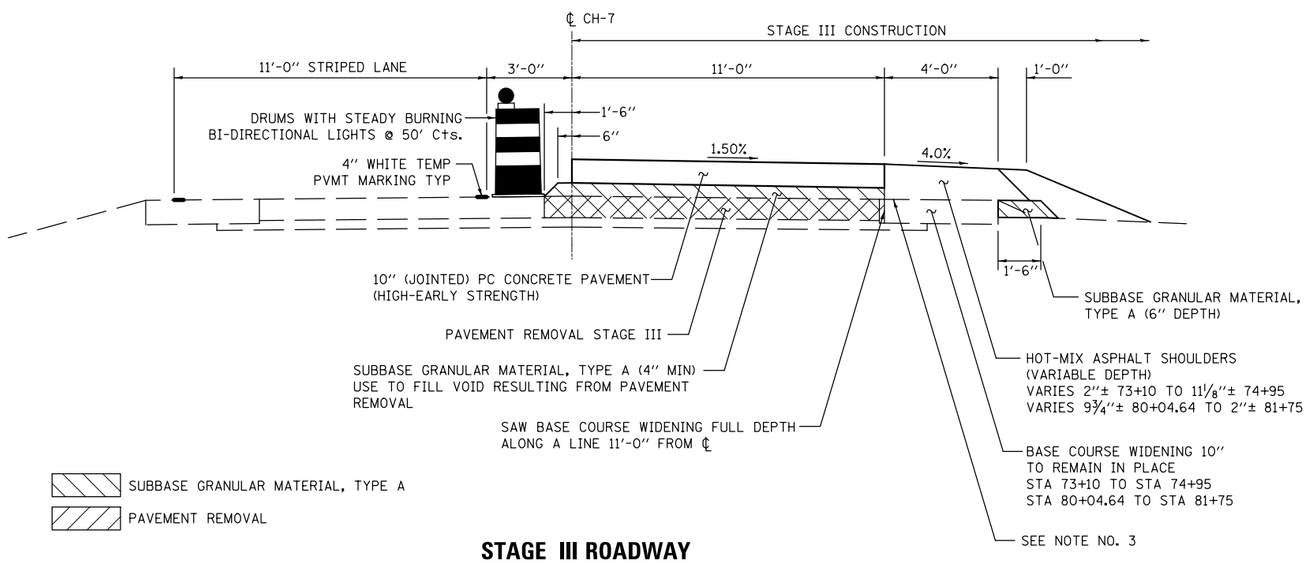

STAGE III ROADWAY
STA 73+10 TO STA 74+95
STA 80+04.64 TO STA 81+75

ESCA CONSULTANTS, INC.	USER NAME = k.jk	DESIGNED - JHM	REVISED -	STATE OF ILLINOIS DEPARTMENT OF TRANSPORTATION	FAS 938 (CH 7) STAGE CONSTRUCTION DETAILS	F.A.I. RTE.	SECTION	COUNTY	TOTAL SHEETS / SHEET NO.
	ESCA PROJECT NO. 1295.09	DRAWN - JHM	REVISED -			57	(77-1-3)HB-2	PULASKI	92 / 32
	PLOT SCALE = 0.1667 ' / in.	CHECKED - JMS	REVISED -					CONTRACT NO. 78454	
	PLOT DATE = 12/11/2018 7:58:16 AM	DATE - 08/18	REVISED -		SCALE: NONE / SHEET NO. 6 OF 8 SHEETS / STA. 71+00 TO STA. 83+00	FED. ROAD DIST. NO.	ILLINOIS	FED. AID PROJECT	

PRINT DRIVER = I_PD_E_B_B_w1wf9
PEN TABLE = IDOT_V8NOZ.tbl
PEN WIDTH = DEFAULT
FILE NAME = C:\PWIDOT\78454-ent-stagingdt.dgn

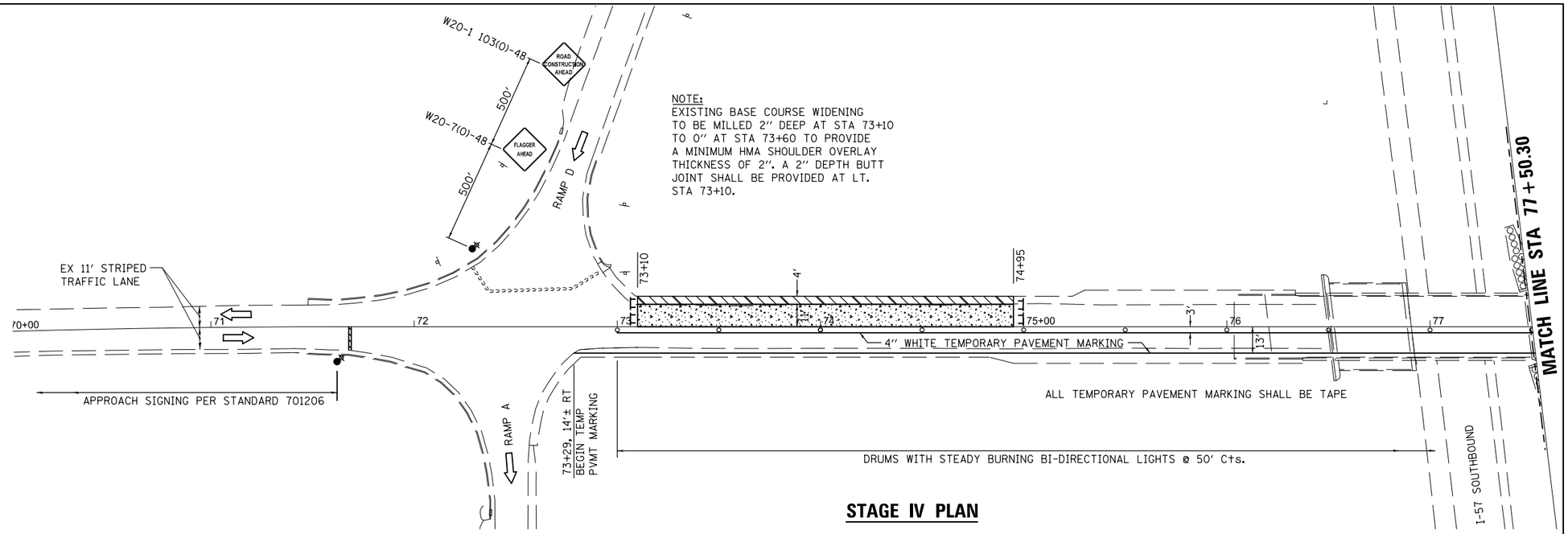

STAGE IV PLAN

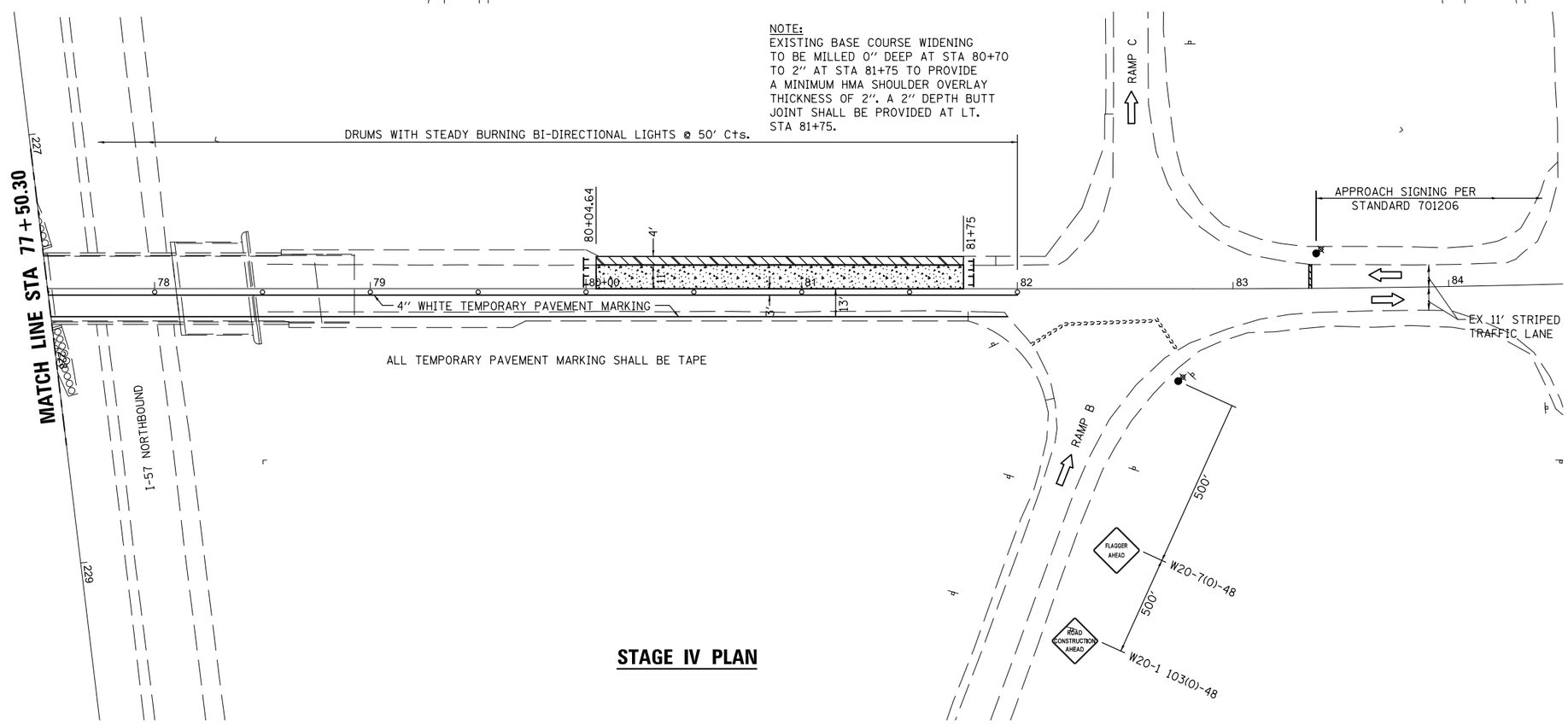

STAGE IV PLAN

30 0 30 60
SCALE IN FEET

N

LEGEND

- DIRECTION OF TRAFFIC
- DRUM WITH STEADY BURNING BI-DIRECTIONAL LIGHT
- TYPE III BARRICADE WITH FLASHING LIGHTS
- FLAGGER WITH TRAFFIC CONTROL SIGN AND OVERHEAD LIGHT SOURCE
- HMA SHOULDERS (VARIABLE DEPTH)
- PCC PAVEMENT 10" (JOINTED) (HIGH-EARLY STRENGTH)

PRINT DRIVER = I_PDF_8_8.pltcfg
PEN TABLE = IDOT_STANDARD.tbl
PLOT SCALE = 1:1 (FULL SCALE)
FILE NAME = C:\78454-sht-stagingdt.dgn

ESCA CONSULTANTS, INC.

USER NAME = k.jk	DESIGNED - JHM	REVISED -	STATE OF ILLINOIS DEPARTMENT OF TRANSPORTATION
ESCA PROJECT NO. 1295.09	DRAWN - JHM	REVISED -	
PLOT SCALE = 0.1667 ' / in.	CHECKED - JMS	REVISED -	
PLOT DATE = 12/11/2018 7:58:16 AM	DATE - 08/18	REVISED -	

FAS 938 (CH 7) STAGE CONSTRUCTION DETAILS

SCALE: AS SHOWN | SHEET NO. 7 OF 8 SHEETS | STA. 71+00 TO STA. 83+00

F.A.I. RTE.	SECTION	COUNTY	TOTAL SHEETS	SHEET NO.
57	(77-1-3)HB-2	PULASKI	92	33
		CONTRACT NO. 78454		

FED. ROAD DIST. NO. | ILLINOIS | FED. AID PROJECT

STAGE IV GENERAL NOTES

1. TRAFFIC CONTROL STANDARD 701206 SHALL BE USED FOR STAGE III AND STAGE IV ROADWAY WORK. THE TRAFFIC CONTROL SHALL REMAIN IN PLACE FROM THE START OF STAGE III UNTIL THE WORK IN STAGE IV IS COMPLETE. ROAD CONSTRUCTION AHEAD AND FLAGGER AHEAD SIGNS SHALL BE PROVIDED FOR BOTH THE RAMP B AND RAMP D TRAFFIC. TRAFFIC CONTROL STANDARD 701206 SHALL BE USED TO CLOSE ONE LANE FROM STA 73+10 TO STA 81+75 AND FLAGGERS SHALL BE PRESENT AT ALL TIMES. NIGHT TIME WORK ZONE LIGHTING SHALL BE USED. THE FLAGGER STATIONS WILL BE ILLUMINATED BY AN OVERHEAD LIGHT SOURCE IN ACCORDANCE WITH ARTICLE 701.13. THE TWO FLAGGERS SHOWN ON STANDARD 701206 SHALL BE PROVIDED AND A FLAGGER SHALL ALSO BE POSITIONED AT BOTH RAMP B AND RAMP D. A TOTAL OF FOUR FLAGGERS WILL BE REQUIRED AT ALL TIMES AND THEY SHALL BE IN DIRECT COMMUNICATION WITH ONE ANOTHER. DRUMS WITH BI-DIRECTIONAL STEADY BURN LIGHTS SHALL BE USED ON 50-FOOT CENTERS THROUGH THE TANGENT AREA.

2. THE STAGE IV ROADWAY WORK SHALL BEGIN IMMEDIATELY AFTER THE COMPLETION OF THE STAGE III ROADWAY WORK. THE STAGE IV ROADWAY WORK SHALL BE IN THE WESTBOUND LANE OF COUNTY HIGHWAY 7 FROM LT STA 73+10 TO LT STA 74+95 AND FROM LT STA 80+04.64 TO LT STA 81+75 AND INCLUDES THE REMOVAL OF THE EXISTING PAVEMENT AND THE EXISTING TEMPORARY RAMPS; PLACEMENT OF SUBBASE GRANULAR MATERIAL; CONSTRUCTING THE PC CONCRETE PAVEMENT 10"; AND CONSTRUCTING THE HMA SHOULDERS ADJACENT TO THE NEW PAVEMENT.

3. THE EXISTING BASE COURSE WIDENING 10" SHALL BE SAWED FULL DEPTH AND PARTIALLY REMOVED TO PROVIDE A MINIMUM 11-FOOT PAVEMENT WIDTH FROM CENTERLINE TO THE PROPOSED EDGE OF PAVEMENT FROM LT STA 73+10 TO 73+90, LT STA 74+38 TO 74+85, LT STA 80+04.64 TO 80+81 AND LT STA 81+53 TO 81+75. THE PROPOSED TOP OF PAVEMENT WILL BE A VARYING HEIGHT ABOVE THE TOP OF THE EXISTING BASE COURSE WIDENING. THE FORMWORK FOR THE PROPOSED PAVEMENT SHALL BE EITHER CONSTRUCTED TO A VARIABLE HEIGHT ABOVE THE EXISTING BASE COURSE WIDENING TO MEET THE PLAN ELEVATIONS OR THE BASE COURSE WIDENING SHALL BE REMOVED TO AN ADDITIONAL MINIMUM WIDTH OF 4 INCHES TO ALLOW FORMWORK FOR THE PROPOSED PAVEMENT ACCORDING TO THE DETAILS ON STANDARD 442101 (CLASS B PATCHING). THE VOID CREATED BY THE REMOVAL OF THE ADDITIONAL BASE COURSE WIDENING TO ALLOW FOR THE FORMWORK SHALL BE FILLED WITH HMA SHOULDER MATERIAL AFTER COMPLETION OF THE PROPOSED PAVEMENT AND FORM REMOVAL.

   THE WIDTH FROM CENTERLINE TO THE EDGE OF THE EXISTING BASE COURSE WIDENING 10" VARIES FROM 11'-0" TO 11'-2" FOR THE REMAINING STAGE IV PAVEMENT AREAS. THE FORMWORK FOR THE PROPOSED PAVEMENT SHALL BE EITHER CONSTRUCTED TO A VARIABLE HEIGHT ABOVE THE EXISTING BASE COURSE WIDENING TO MEET THE PLAN ELEVATIONS AND EDGE OF PAVEMENT OFFSET AND PORTLAND CEMENT CONCRETE POURED UNDER THE FORMWORK TO THE EDGE OF THE EXISTING BASE COURSE; OR, THE BASE COURSE WIDENING SHALL BE REMOVED TO A MINIMUM WIDTH OF 11'-4" FROM CENTERLINE TO ALLOW FORMWORK FOR THE PROPOSED PAVEMENT ACCORDING TO THE DETAILS ON STANDARD 442101 (CLASS B PATCHING). THE VOID CREATED BY THE REMOVAL OF THE ADDITIONAL BASE COURSE WIDENING TO ALLOW FOR THE FORMWORK SHALL BE FILLED WITH HMA SHOULDER MATERIAL AFTER COMPLETION OF THE PROPOSED PAVEMENT AND FORM REMOVAL.

4. THE ADVANCE WIDTH RESTRICTION WARNING SIGNS ERECTED FOR STAGE II SHALL REMAIN IN PLACE FOR STAGE III AND STAGE IV ROADWAY WORK. THE DIMENSION SHOWN ON THE WIDTH RESTRICTION SIGNS SHALL BE 11'- 0".

5. THE P.C. CONCRETE PAVEMENT CONSTRUCTED UNDER STAGE III AND STAGE IV SHALL BE 10" JOINTED HIGH-EARLY STRENGTH P.C. CONCRETE PAVEMENT. THE CONCRETE MIXTURE SHALL USE A CLASS PP CONCRETE CRITERIA AND SHALL BE CONSTRUCTED ACCORDING TO THE SPECIAL PROVISION FOR HIGH-EARLY STRENGTH CONCRETE PAVEMENT 10".

① LONGITUDINAL CONSTRUCTION JOINT
(TIE BAR GROUTED IN PLACE)
PER STANDARD 420001

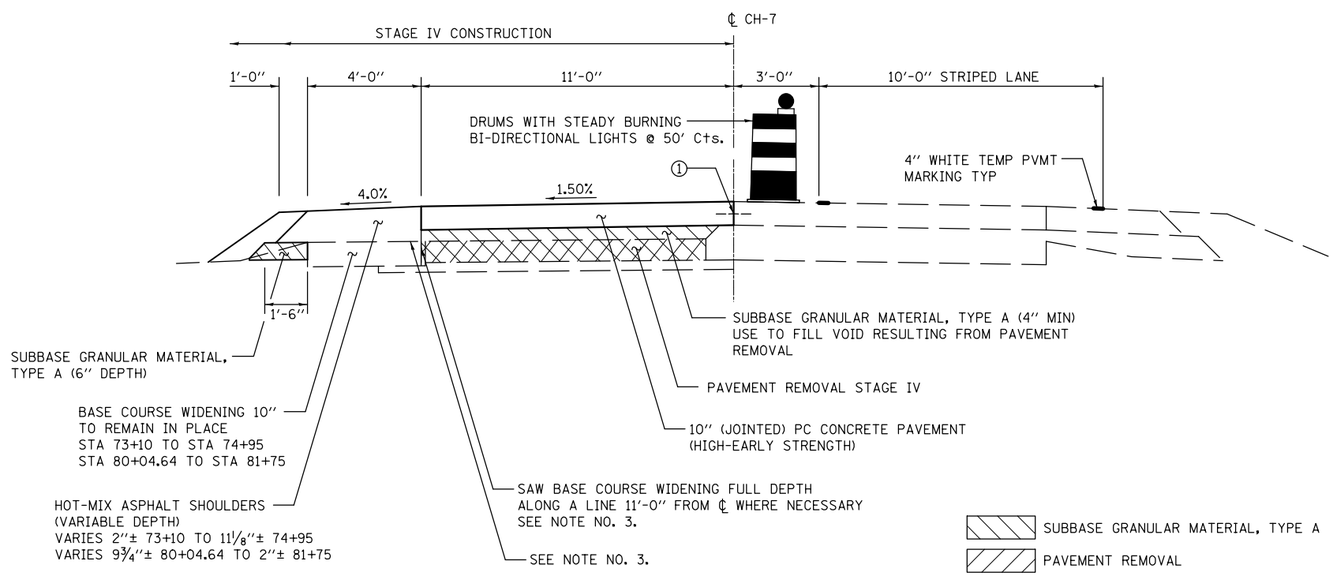

STAGE IV ROADWAY
STA 73+10 TO STA 74+95
STA 80+04.64 TO STA 81+75

PRINT DRIVER = L:PDF_B&W.pltcfg
PEN TABLE = IDOT.tbl
PLOT SCALE = 1.0000 ' / in.
FILE NAME = D:\78454-sht-staging01.dgn

ESCA CONSULTANTS, INC.	USER NAME = kjk	DESIGNED - JHM	REVISED -	STATE OF ILLINOIS DEPARTMENT OF TRANSPORTATION	FAS 938 (CH 7) STAGE CONSTRUCTION DETAILS			F.A.I. RTE.	SECTION	COUNTY	TOTAL SHEETS	SHEET NO.
	ESCA PROJECT NO. 1295.09	DRAWN - JHM	REVISED -					57	(77-1-3)HB-2	PULASKI	92	34
	PLOT SCALE = 0.1667 ' / in.	CHECKED - JMS	REVISED -							CONTRACT NO. 78454		
	PLOT DATE = 12/11/2018 7:58:17 AM	DATE - 08/18	REVISED -		SCALE: NONE	SHEET NO. 8 OF 8 SHEETS	STA. 71+00 TO STA. 83+00	FED. ROAD DIST. NO.	ILLINOIS	FED. AID PROJECT		

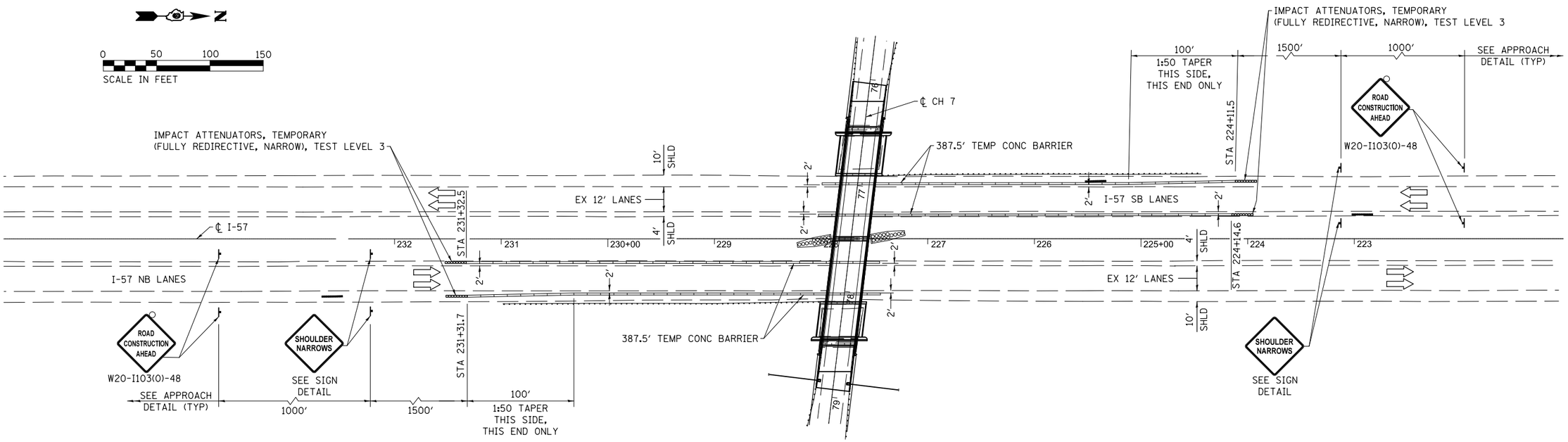

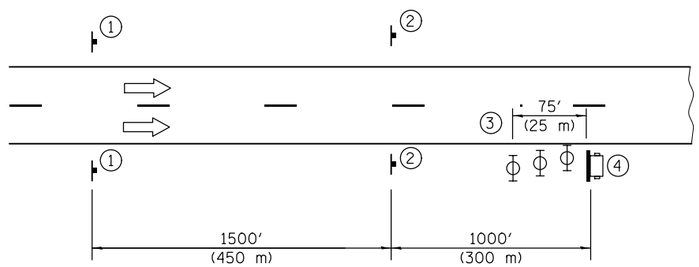

SYMBOLS

TRAILER MOUNTED SIGN

SIGN

TYPE II BARRICADE, DRUM, OR VERTICAL BARRICADE WITH MONODIRECTIONAL FLASHING LIGHT

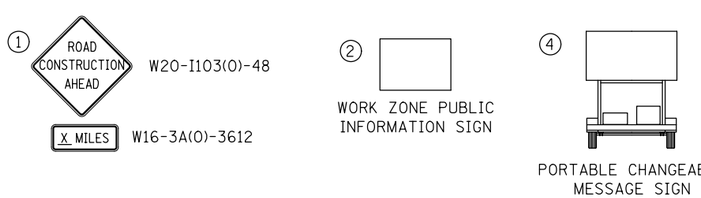

APPROACH DETAIL

1. AN ADVANCE ROAD CONSTRUCTION AHEAD SIGN SHALL BE LOCATED 3 TO 5 MILES IN ADVANCE OF THE PROJECT LIMITS.
2. THE MESSAGE AND SIZE OF THE WORK ZONE PUBLIC INFORMATION SIGN SHALL BE AS SPECIFIED BY THE DEPARTMENT.
3. THREE, TYPE II BARRICADES, DRUMS, OR VERTICAL BARRICADES AT 25' (8 M) CENTERS.
4. THE MESSAGE BOARD SHALL BE USED TO DISPLAY STATUS OF LANES WITHIN THE PROJECT. THE PRIMARY MESSAGES SHALL BE:

   "SHOULDER NARROWS" / " X MILES AHEAD" / "ALL LANES OPEN"

BLACK LEGEND AND BORDER ON REFLECORIZED ORANGE BACKGROUND

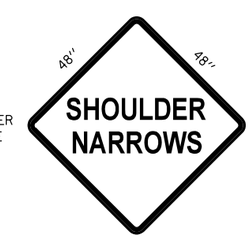

SIGN DETAIL

GENERAL NOTES

1. ALL TRAFFIC SIGNS SHALL BE POST MOUNTED.
2. ALL TRAFFIC SIGNS ARE REQUIRED TO MEET ARTICLES 1106.01 & 1106.02 OF THE STANDARD SPECIFICATIONS.
3. ONE TYPE A LOW INTENSITY FLASHING LIGHT SHALL BE INSTALLED ABOVE EACH OF THE ROAD CONSTRUCTION AHEAD WARNING SIGNS.
4. THE APPROACH SIGNS AND MESSAGE BOARDS SHALL BE LOCATED SO THEY WILL BE IN PROPER POSITION FOR THE I-57 TEMPORARY CLOSURE.
5. TEMPORARY CONCRETE BARRIER WILL BE IN ACCORDANCE WITH STANDARD 704001 AND WILL BE PAID FOR SEPERATELY.
6. BARRIER WALL REFLECTORS, TYPE C, SHALL BE INSTALLED ON THE TEMPORARY CONCRETE BARRIER IN ACCORDANCE WITH STANDARD 704001 AND 782006.
7. TEMPORARY IMPACT ATTENUATORS WILL BE PAID FOR SEPERATELY.
8. UNLESS NOTED AS PAID FOR SEPERATELY, ALL TRAFFIC CONTROL WORK SHOWN ON THIS DETAIL SHALL BE INCLUDED IN THE CONTRACT UNIT LUMP SUM PRICE FOR TRAFFIC CONTROL AND PROTECTION, (SPECIAL).

PRINT DRIVER = LPD_E_B_Bw1ch9
PEN TABLE = IDOT_STANDARD.tbl
SHEET SIZE = 24.00 X 36.00
FILE NAME = D:\78454-sht-staging82.dgn

ESCA CONSULTANTS, INC.

USER NAME = kjk	DESIGNED - JHM	REVISED -	
ESCA PROJECT NO. 1295.09	DRAWN - JHM	REVISED -	
PLOT SCALE = 0.1667 ' / in.	CHECKED - JMS	REVISED -	
PLOT DATE = 12/11/2018 7:58:17 AM	DATE - 08/18	REVISED -	

STATE OF ILLINOIS
DEPARTMENT OF TRANSPORTATION

I-57 SHOULDER CLOSURE

SCALE: 1"=50' | SHEET NO. 1 OF 1 SHEETS | STA. 74+00 TO STA. 103+96

F.A.I. RTE.	SECTION	COUNTY	TOTAL SHEETS	SHEET NO.
57	(77-1-3)HB-2	PULASKI	92	35
		CONTRACT NO. 78454		
FED. ROAD DIST. NO.	ILLINOIS	FED. AID PROJECT		

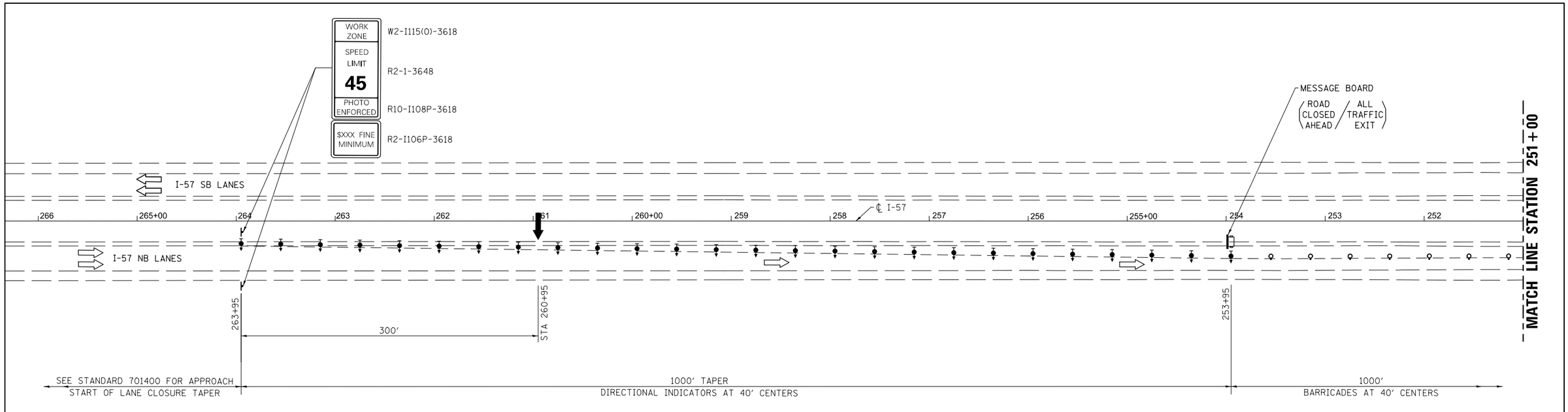

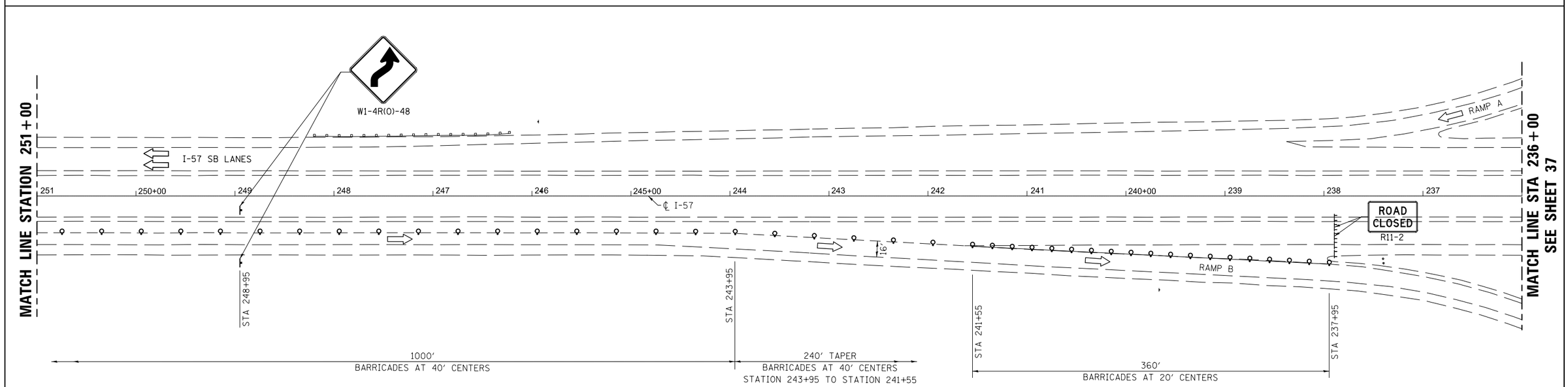

I-57 NORTHBOUND TEMPORARY CLOSURE PLAN

NOTE: SEE SHEET NO. 37 FOR GENERAL NOTES.

LEGEND

- DIRECTIONAL INDICATOR BARRICADE WITH LIGHT
- TYPE II BARRICADE OR DRUM WITH LIGHT
- FLAGGER WITH TRAFFIC CONTROL SIGN AND OVERHEAD LIGHT SOURCE
- TYPE III BARRICADE WITH FLASHING LIGHTS
- PORTABLE CHANGEABLE MESSAGE SIGN
- ARROW BOARD
- SIGN

0 50 100 150
SCALE IN FEET

ESCA CONSULTANTS, INC.

USER NAME = kjk	DESIGNED - JHM	REVISED -	
ESCA PROJECT NO. 1295.09	DRAWN - JHM	REVISED -	
PLOT SCALE = 0.1667 ' / in.	CHECKED - JMS	REVISED -	
PLOT DATE = 12/11/2018 7:58:18 AM	DATE - 08/18	REVISED -	

STATE OF ILLINOIS
DEPARTMENT OF TRANSPORTATION

I-57 TRAFFIC CONTROL
TEMPORARY CLOSURE

SCALE: 1"=50' | SHEET NO. 1 OF 2 SHEETS | STA. 266+00 TO STA. 236+00

F.A.I. RTE.	SECTION	COUNTY	TOTAL SHEETS	SHEET NO.
57	(77-1-3)HB-2	PULASKI	92	36
		CONTRACT NO. 78454		
FED. ROAD DIST. NO.	ILLINOIS	FED. AID PROJECT		

PRINT DRIVER = L:PD_E:\Bentley\
PCF = IDOT_V8XCAD.pcf
PCS = IDOT_V8XCAD.cfg
FILE NAME = D:\78454-sht-staging03.dgn

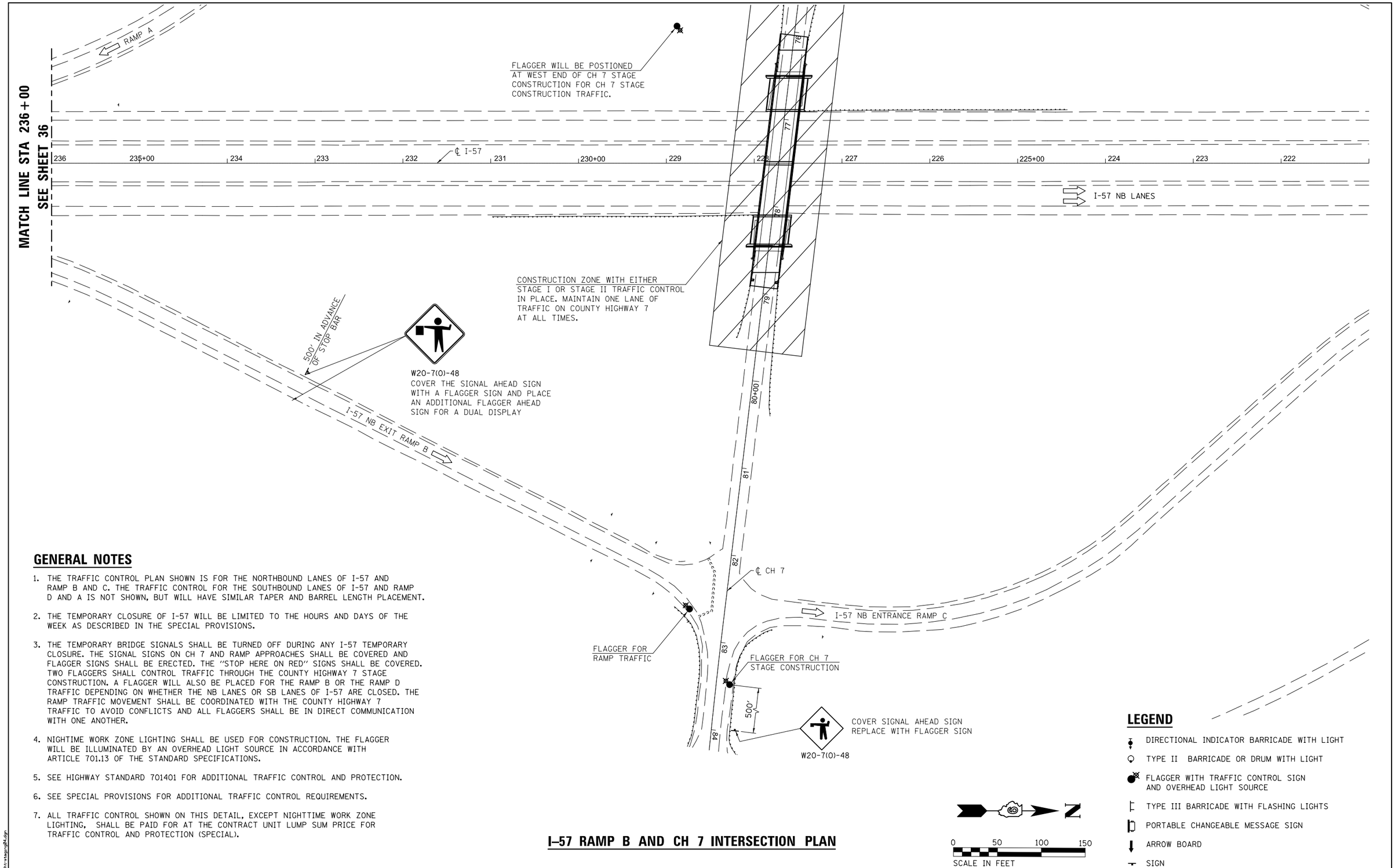

GENERAL NOTES

1. THE TRAFFIC CONTROL PLAN SHOWN IS FOR THE NORTHBOUND LANES OF I-57 AND RAMP B AND C. THE TRAFFIC CONTROL FOR THE SOUTHBOUND LANES OF I-57 AND RAMP D AND A IS NOT SHOWN, BUT WILL HAVE SIMILAR TAPER AND BARREL LENGTH PLACEMENT.

2. THE TEMPORARY CLOSURE OF I-57 WILL BE LIMITED TO THE HOURS AND DAYS OF THE WEEK AS DESCRIBED IN THE SPECIAL PROVISIONS.

3. THE TEMPORARY BRIDGE SIGNALS SHALL BE TURNED OFF DURING ANY I-57 TEMPORARY CLOSURE. THE SIGNAL SIGNS ON CH 7 AND RAMP APPROACHES SHALL BE COVERED AND FLAGGER SIGNS SHALL BE ERECTED. THE "STOP HERE ON RED" SIGNS SHALL BE COVERED. TWO FLAGGERS SHALL CONTROL TRAFFIC THROUGH THE COUNTY HIGHWAY 7 STAGE CONSTRUCTION. A FLAGGER WILL ALSO BE PLACED FOR THE RAMP B OR THE RAMP D TRAFFIC DEPENDING ON WHETHER THE NB LANES OR SB LANES OF I-57 ARE CLOSED. THE RAMP TRAFFIC MOVEMENT SHALL BE COORDINATED WITH THE COUNTY HIGHWAY 7 TRAFFIC TO AVOID CONFLICTS AND ALL FLAGGERS SHALL BE IN DIRECT COMMUNICATION WITH ONE ANOTHER.

4. NIGHTTIME WORK ZONE LIGHTING SHALL BE USED FOR CONSTRUCTION. THE FLAGGER WILL BE ILLUMINATED BY AN OVERHEAD LIGHT SOURCE IN ACCORDANCE WITH ARTICLE 701.13 OF THE STANDARD SPECIFICATIONS.

5. SEE HIGHWAY STANDARD 701401 FOR ADDITIONAL TRAFFIC CONTROL AND PROTECTION.

6. SEE SPECIAL PROVISIONS FOR ADDITIONAL TRAFFIC CONTROL REQUIREMENTS.

7. ALL TRAFFIC CONTROL SHOWN ON THIS DETAIL, EXCEPT NIGHTTIME WORK ZONE LIGHTING, SHALL BE PAID FOR AT THE CONTRACT UNIT LUMP SUM PRICE FOR TRAFFIC CONTROL AND PROTECTION (SPECIAL).

I-57 RAMP B AND CH 7 INTERSECTION PLAN

LEGEND

- DIRECTIONAL INDICATOR BARRICADE WITH LIGHT
- TYPE II BARRICADE OR DRUM WITH LIGHT
- FLAGGER WITH TRAFFIC CONTROL SIGN AND OVERHEAD LIGHT SOURCE
- TYPE III BARRICADE WITH FLASHING LIGHTS
- PORTABLE CHANGEABLE MESSAGE SIGN
- ARROW BOARD
- SIGN

PRINT DRIVER = I:\PD_E.B.Bullard\g
PEN TABLE = = = I:\DOT_LIBRARY\dot
PEN NAME = = = = = dot_pen.tbl
FILE NAME = D:\78454-sht-staging\R4.dgn

ESCA CONSULTANTS, INC.

USER NAME = kjk	DESIGNED - JHM	REVISED -	
ESCA PROJECT NO. 1295.09	DRAWN - JHM	REVISED -	
PLOT SCALE = 0.1667 ' / in.	CHECKED - JMS	REVISED -	
PLOT DATE = 12/11/2018 7:58:18 AM	DATE - 08/18	REVISED -	

STATE OF ILLINOIS
DEPARTMENT OF TRANSPORTATION

I-57 TRAFFIC CONTROL
TEMPORARY CLOSURE

SCALE: 1"=50' | SHEET NO. 2 OF 2 SHEETS | STA. 242+00 TO STA. 227+00

F.A.I. RTE.	SECTION	COUNTY	TOTAL SHEETS	SHEET NO.
57	(77-1-3)HB-2	PULASKI	92	37
		CONTRACT NO. 78454		
FED. ROAD DIST. NO.	ILLINOIS	FED. AID PROJECT		

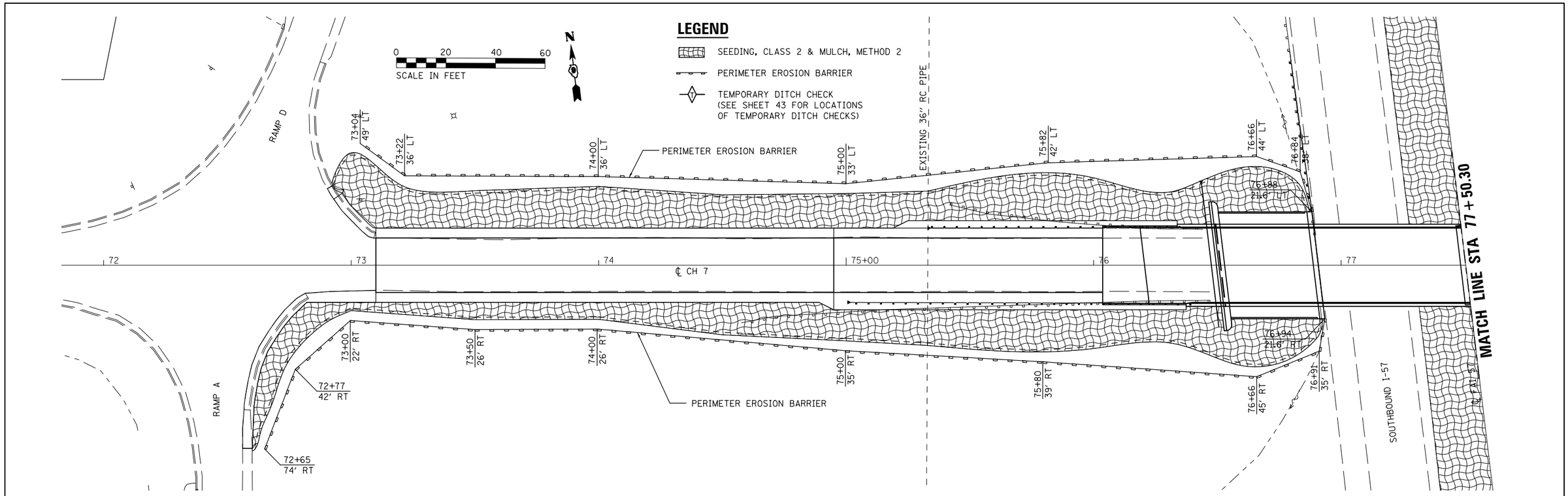

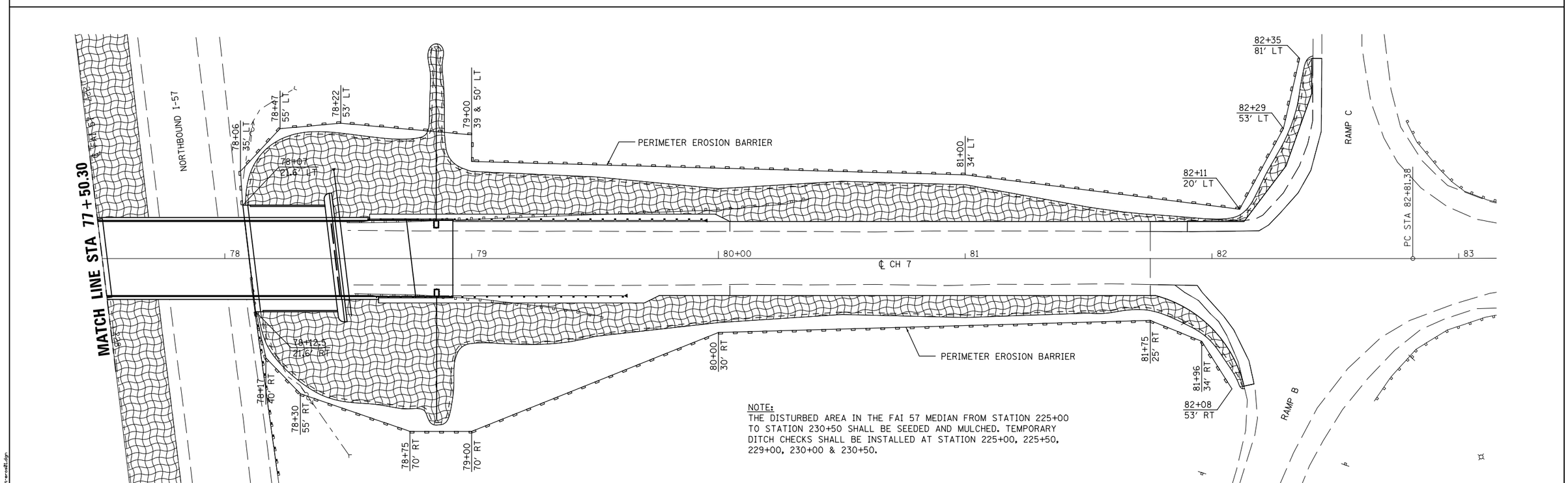

NOTE:
THE DISTURBED AREA IN THE FAI 57 MEDIAN FROM STATION 225+00 TO STATION 230+50 SHALL BE SEEDED AND MULCHED. TEMPORARY DITCH CHECKS SHALL BE INSTALLED AT STATION 225+00, 225+50, 229+00, 230+00 & 230+50.

PRINT DRIVER = I_PDF.B.B.B.pltcfg
PEN TABLE = IDOT_VERBOSE.tbl
PLOT SCALE = 50.000000
FILE NAME = C:\78454-erc-ecp01.dgn

ESCA CONSULTANTS, INC.

USER NAME = k.jk	DESIGNED - JHM	REVISED -	
ESCA PROJECT NO. 1259.09	DRAWN - JHM	REVISED -	
PLOT SCALE = 0:2 ':' / in.	CHECKED - JMS	REVISED -	
PLOT DATE = 12/11/2018 7:58:20 AM	DATE - 08/18	REVISED -	

STATE OF ILLINOIS
DEPARTMENT OF TRANSPORTATION

EROSION CONTROL PLAN

SCALE: 1"=20' | SHEET NO. 1 OF 1 SHEETS | STA. 72+00.00 TO STA. 83+00.00

F.A.I. RTE.	SECTION	COUNTY	TOTAL SHEETS	SHEET NO.
57	(77-1-3)HB-2	PULASKI	92	38
		CONTRACT NO. 78454		
FED. ROAD DIST. NO.	ILLINOIS	FED. AID PROJECT		

LEGEND

- PAVEMENT REMOVAL STAGE I AND STAGE II
- PAVEMENT REMOVAL STAGE III AND STAGE IV
- PAVED SHOULDER REMOVAL PRE-STAGE I
- SURFACE REMOVAL, VARIABLE DEPTH (SPECIAL) STAGE III AND STAGE IV

0 20 40 60
SCALE IN FEET

N

NOTES:

1. THE COMBINATION CONCRETE CURB AND GUTTER REMOVAL SHALL BE DONE DURING PRE-STAGE I.
2. THE EXISTING IMPACT ATTENUATORS AND ATTENUATOR PADS IN THE I-57 MEDIAN SHALL BE REMOVED DURING THE STAGE I PIER REMOVAL.
3. EXISTING REINFORCED BRIDGE APPROACH PAVEMENT SHALL BE REMOVED AND WILL BE PAID FOR AT THE CONTRACT UNIT PRICE PER SQUARE YARD FOR PAVEMENT REMOVAL.
4. BASE COURSE WIDENING 10" CONSTRUCTED IN PRE-STAGE I THAT WILL BE OVERLAID WITH HMA SHOULDERS DURING STAGE III AND STAGE IV.
5. THE EXISTING CATCH BASIN SHALL BE FILLED TO MAINTAIN FLOW ACCORDING TO SECTION 605 OF THE STANDARD SPECIFICATIONS. THE EXISTING EARTH SHOULDER ADJACENT TO THE PROPOSED HMA SHOULDERS SHALL BE GRADED TO PROVIDE POSITIVE DRAINAGE.

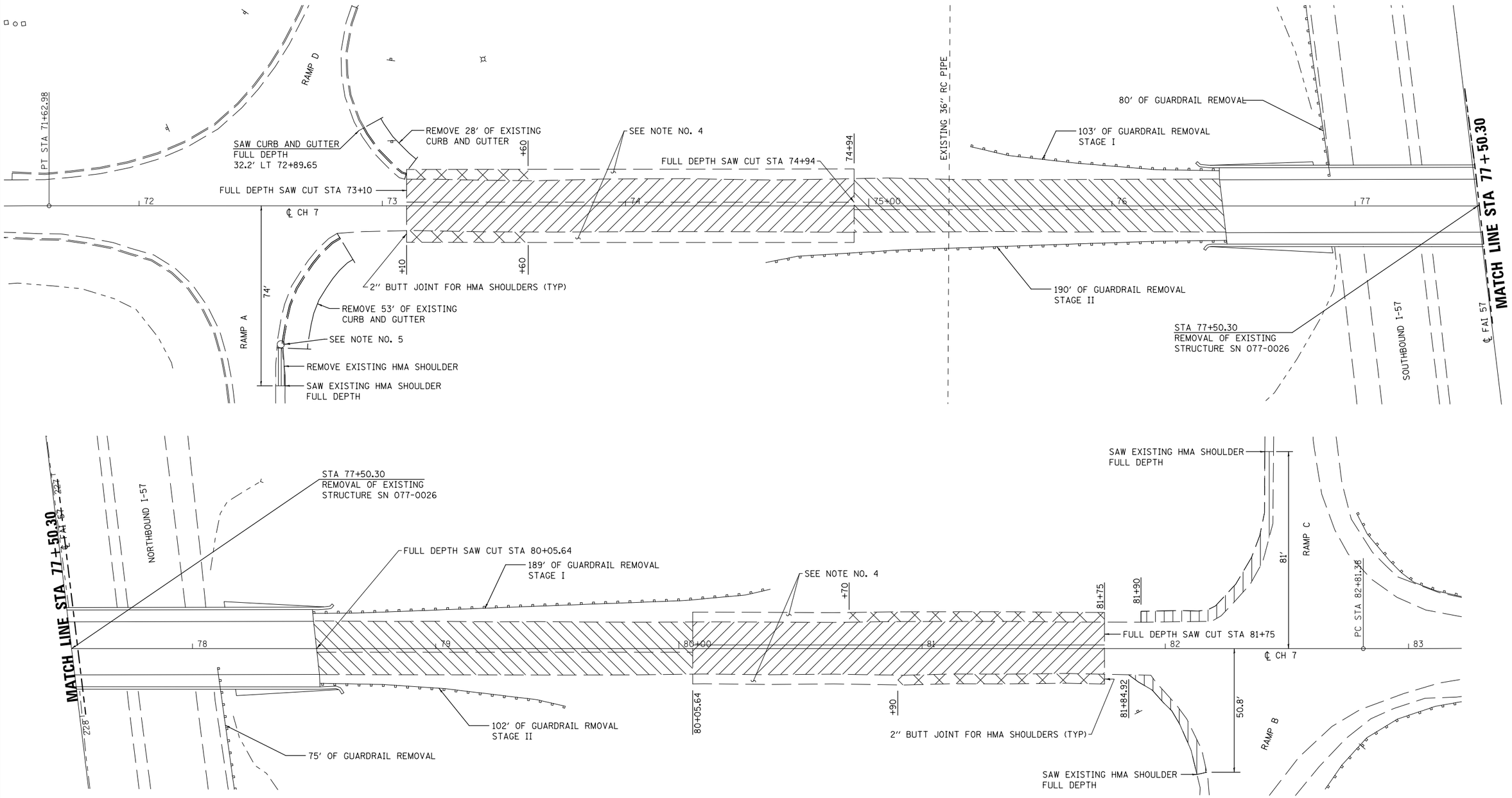

USER NAME = kjk	DESIGNED - JHM	REVISED -	
ESCA PROJECT NO. 12594.09	DRAWN - JHM	REVISED -	
PLOT SCALE = 0:2 ':' / in.	CHECKED - JMS	REVISED -	
PLOT DATE = 12/11/2018 7:58:20 AM	DATE - 08/18	REVISED -	

ESCA CONSULTANTS, INC.

STATE OF ILLINOIS
DEPARTMENT OF TRANSPORTATION

REMOVAL PLAN

SCALE: 1"=20'-0" | SHEET NO. 1 OF 1 SHEETS | STA. 73+00.00 TO STA. 83+00.00

F.A.I. RTE.	SECTION	COUNTY	TOTAL SHEETS	SHEET NO.
57	(77-1-3)HB-2	PULASKI	92	39
		CONTRACT NO. 78454		

FED. ROAD DIST. NO. | ILLINOIS | FED. AID PROJECT

PRINT DRIVER = I:\PD_E.B.Bailey\fg
HEN_TABLE = ESCA_PDT.tbl
PAGE SETUP = PDT_ARROW.tbl
FILE NAME = D:\78454-sht-rem01.dgn

PROPOSED PAVEMENT MARKING LEGEND

1	MODIFIED URETHANE PAVEMENT MARKING - LINE 4" (WHITE)
2	MODIFIED URETHANE PAVEMENT MARKING - LINE 4" (DOUBLE YELLOW)
3	MODIFIED URETHANE PAVEMENT MARKING - LINE 4" (YELLOW)
4	MODIFIED URETHANE PAVEMENT MARKING - LINE 24" (WHITE)

◆ RAISED REFLECTIVE PAVEMENT MARKER (AMBER BI-DIRECTIONAL)

NOTES:

1. SEE SCHEDULE OF QUANTITIES SHEETS FOR PAVEMENT MARKING AND RAISED REFLECTIVE PAVEMENT MARKER QUANTITIES.
2. SEE HIGHWAY STANDARD 780001 FOR PAVEMENT MARKING DETAILS NOT SHOWN ON THIS SHEET.
3. SEE HIGHWAY STANDARD 781001 FOR RAISED REFLECTIVE PAVEMENT MARKER DETAILS.
4. THE STOP BARS AT EXIT RAMP B AND EXIT RAMP D SHALL BE REPLACED TO MATCH THE EXISTING.

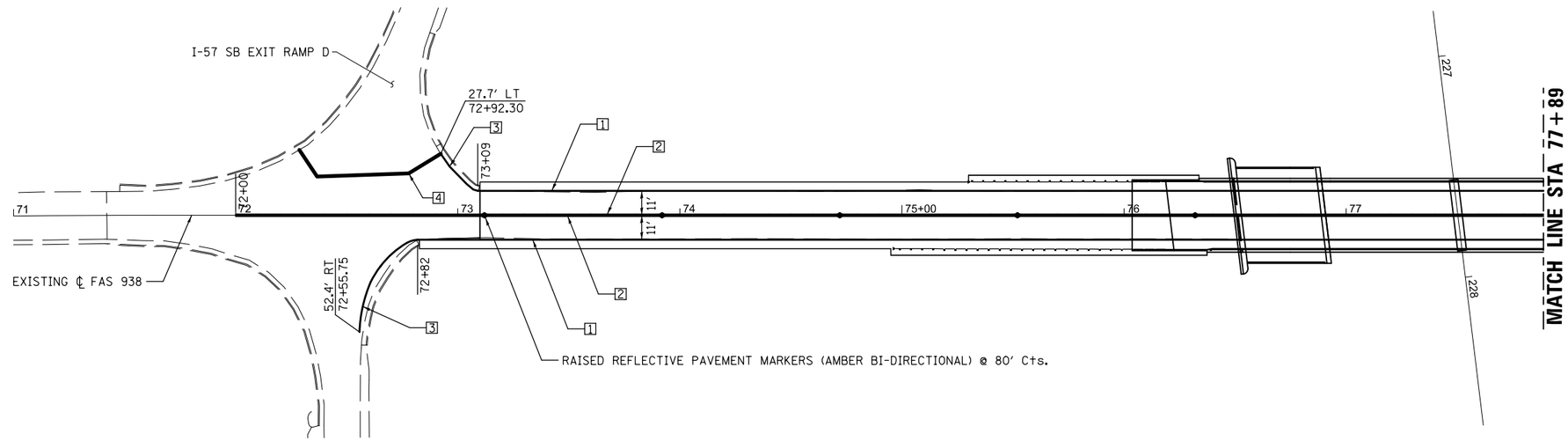

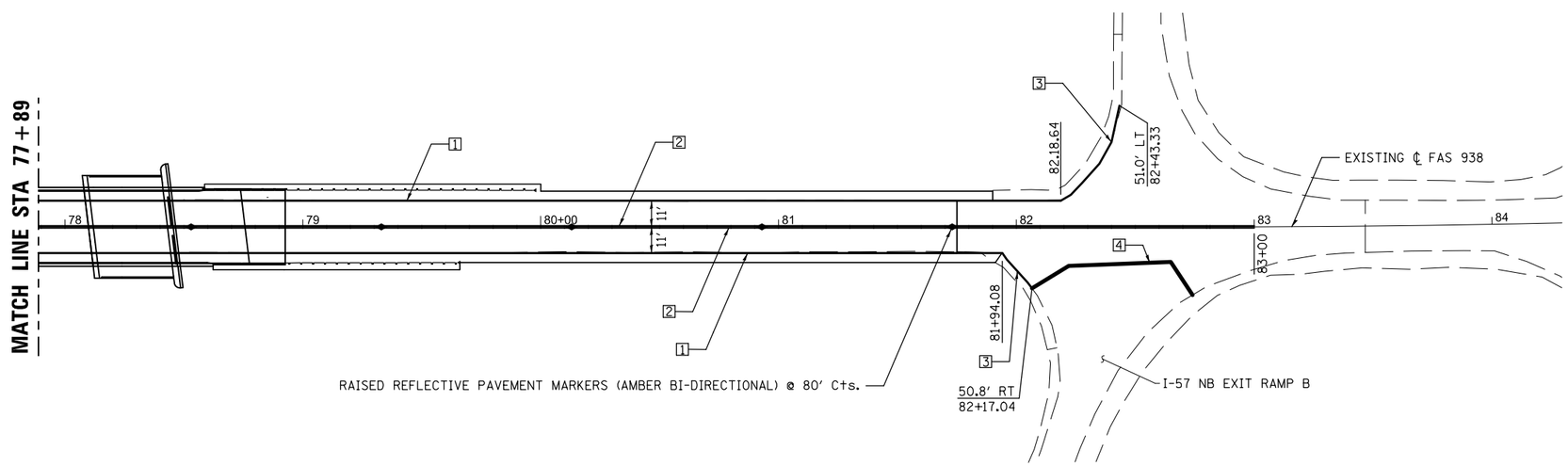

PRINT DRIVER = IDOT.PDF.B.B.Ø.inf'g
PEN TABLE = IDOT.VERØ2.tbl
PLOT SCALE = 1.0000
FILE NAME = C:\78454-ent-pmkØ1.dgn

ESCA CONSULTANTS, INC.

USER NAME = k.jk	DESIGNED - JHM	REVISED -	
ESCA PROJECT NO. 1295.Ø9	DRAWN - JHM	REVISED -	
PLOT SCALE = Ø:2 '/ in.	CHECKED - JMS	REVISED -	
PLOT DATE = 12/11/2018 7:58:22 AM	DATE - 08/18	REVISED -	

STATE OF ILLINOIS
DEPARTMENT OF TRANSPORTATION

FAS 938 (CH 7) PAVEMENT MARKING

SCALE: 1" = 30' | SHEET NO. 1 OF 1 SHEETS | STA. 72+00 TO STA. 83+00

F.A.I. RTE.	SECTION	COUNTY	TOTAL SHEETS	SHEET NO.
57	(77-1-3)HB-2	PULASKI	92	40
		CONTRACT NO. 78454		
FED. ROAD DIST. NO.	ILLINOIS	FED. AID PROJECT		

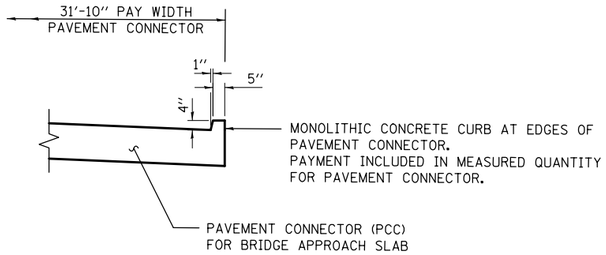

SECTION B–B

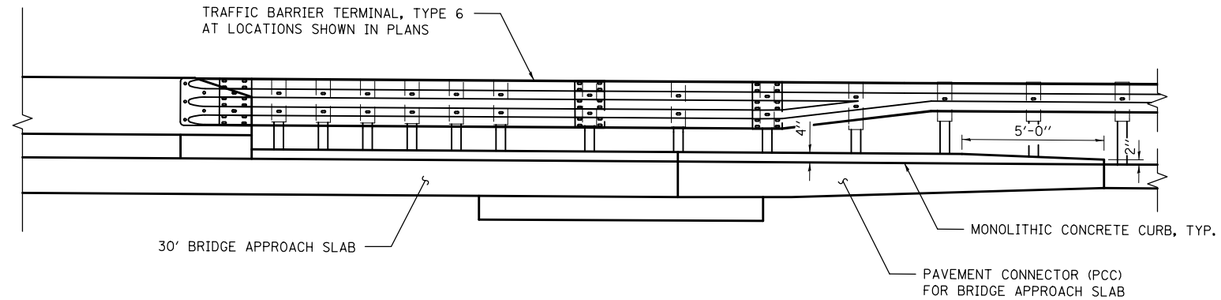

SECTION A–A

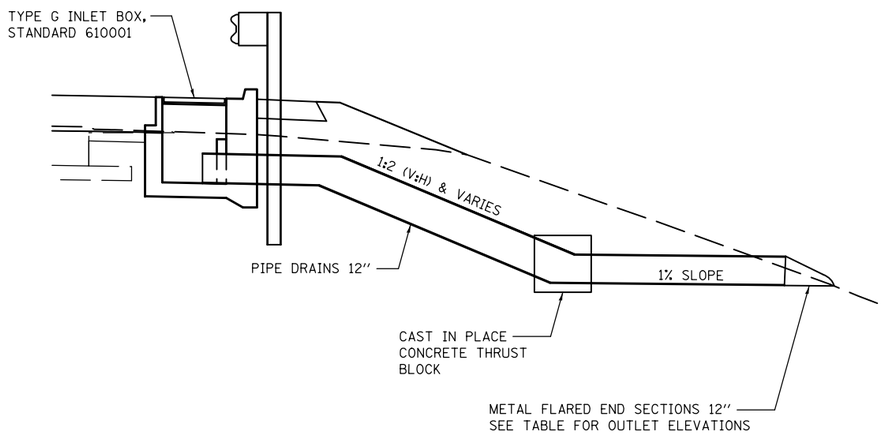

SECTION AT TYPE G INLET BOX

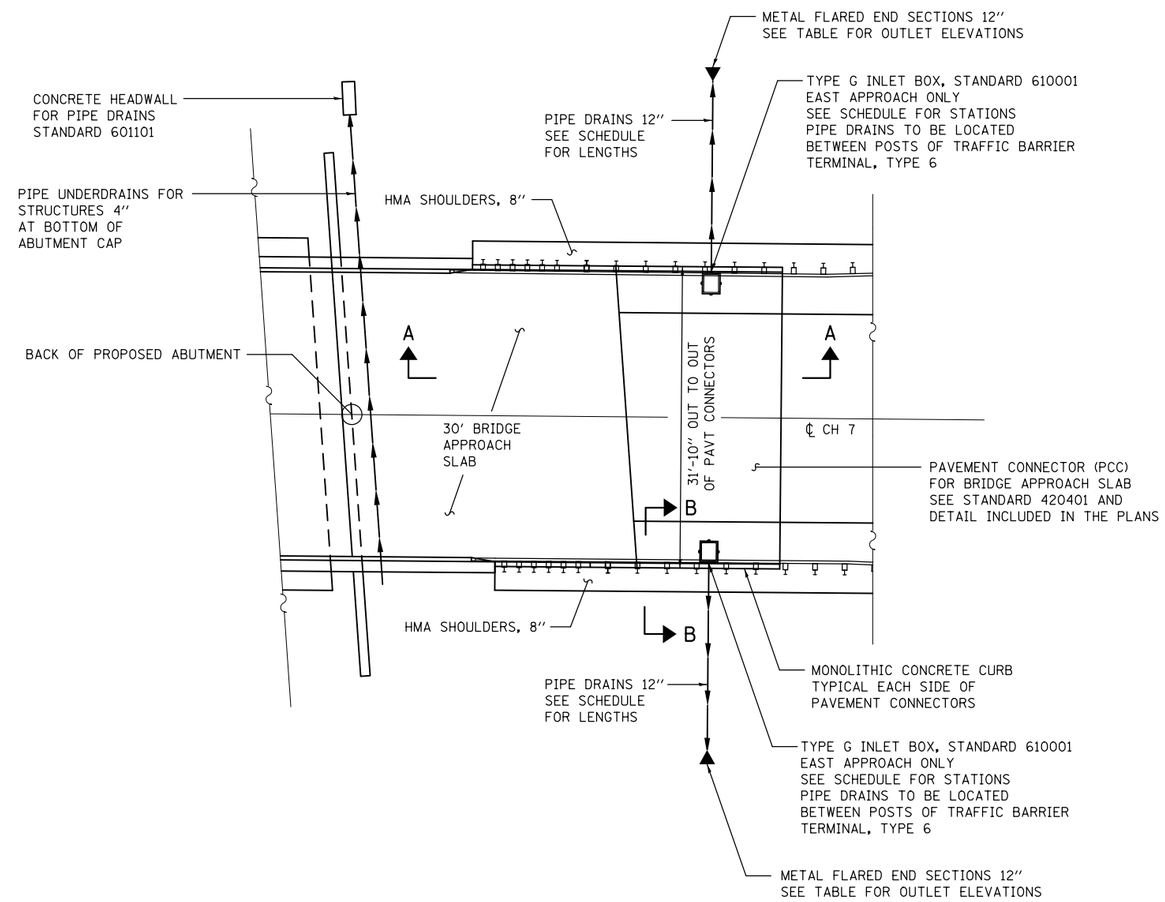

PLAN

PAVEMENT CONNECTOR (PCC) DRAINAGE SCHEDULE

LOCATION			TYPE G INLET BOX, STD. 610001	CONCRETE THRUST BLOCKS	PIPE DRAINS 12"	METAL FLARED END SECTIONS 12"
STATION	LANE	OFFSET	EACH	EACH	FOOT	EACH
78+85.74	WBL	LEFT	1	1	69	1
78+85.10	EBL	RIGHT	1	1	57	1
TOTALS			2	2	126	2

OUTLET ELEVATION TABLE

LOCATION			OUTLET ELEVATION
STATION	LANE	OFFSET	
78+85.74	WBL	79.24' LT	338.83
78+85.10	EBL	66.38' RT	340.31

OFFSET AND ELEVATION SHOWN IS TO THE OUTSIDE OF THE END SECTION

PRINT DRIVER = I.PO.E.B.Bolt=fg
HEX FILE = IDOT.HEXBZ.tbl
PLOT TABLE = IDOT.CTB
FILE NAME = D478454-sht-details01.dgn

ESCA CONSULTANTS, INC.
ENVIRONMENTAL ENGINEERING

USER NAME = kjk	DESIGNED - JHM	REVISED -	
ESCA PROJECT NO. 1259.09	DRAWN - JHM	REVISED -	
PLOT SCALE = 0.1667 ' / in.	CHECKED - JMS	REVISED -	
PLOT DATE = 12/11/2018	DATE - 08/18	REVISED -	

STATE OF ILLINOIS
DEPARTMENT OF TRANSPORTATION

PAVEMENT CONNECTOR DETAILS

SCALE: NONE | SHEET NO. 1 OF 1 SHEETS | STA. TO STA.

F.A.I. RTE.	SECTION	COUNTY	TOTAL SHEETS	SHEET NO.
57	(77-1-3)HB-2	PULASKI	92	41
		CONTRACT NO. 78454		

FED. ROAD DIST. NO. | ILLINOIS | FED. AID PROJECT

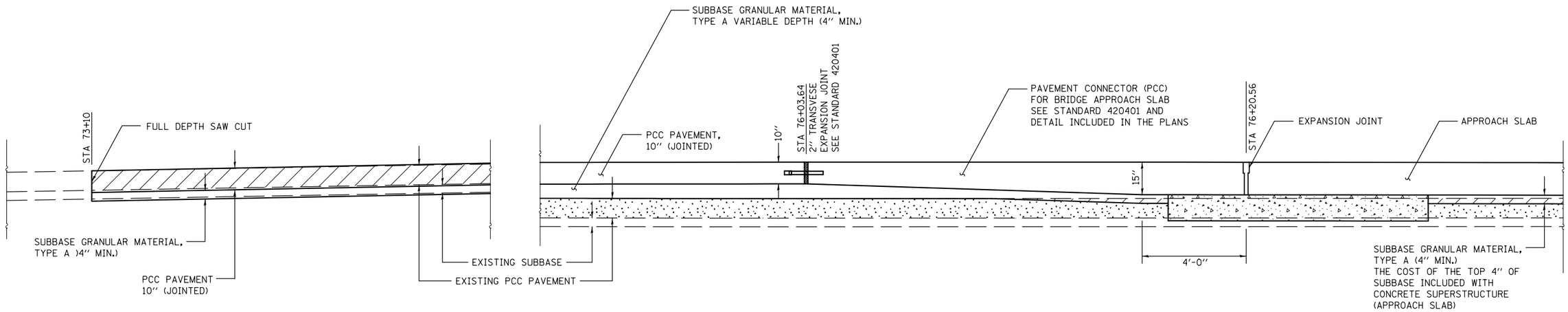

LONGITUDINAL SECTION

FAS 938 (CH 7) STA 73+10 TO STA 76+20.56

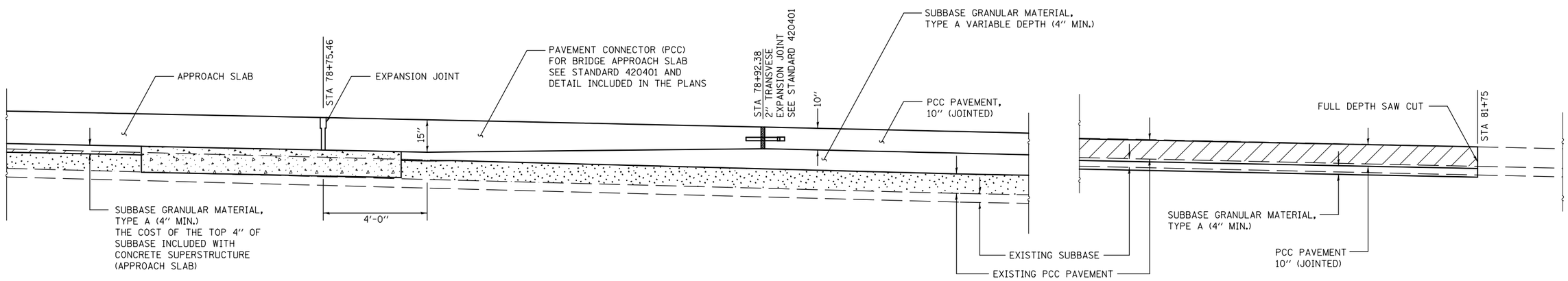

LONGITUDINAL SECTION

FAS 938 (CH 7) STA 78+75.46 TO STA 81+75

LEGEND

- PCC PAVEMENT REMOVAL
- PCC PAVEMENT REMOVAL AND SUBBASE GRANULAR MATERIAL, TYPE A TO FILL THE VOID
- APPROACH FOOTING

PRINT DRIVER = I_PDF.B.Bw1ref9
PEN TABLE = IDOT.VERB2.tbl
WORK UNIT = ENGINEERING
FILE NAME = D978494-pvt-details02.dgn

ESCA CONSULTANTS, INC.
ENGINEERING ARCHITECTURE SURVEYING

USER NAME = k.jk	DESIGNED - JHM	REVISED -	
ESCA PROJECT NO. 1259.09	DRAWN - JHM	REVISED -	
PLOT SCALE = 0.1667 ' / in.	CHECKED - JMS	REVISED -	
PLOT DATE = 12/11/2018	DATE - 08/18	REVISED -	

STATE OF ILLINOIS
DEPARTMENT OF TRANSPORTATION

PAVEMENT TRANSITION DETAILS

SCALE: NONE | SHEET NO. 1 OF 1 SHEETS | STA. 73+10 TO STA. 81+75

F.A.I. RTE.	SECTION	COUNTY	TOTAL SHEETS	SHEET NO.
57	(77-1-3)HB-2	PULASKI	92	42
		CONTRACT NO. 78454		

FED. ROAD DIST. NO. | ILLINOIS | FED. AID PROJECT

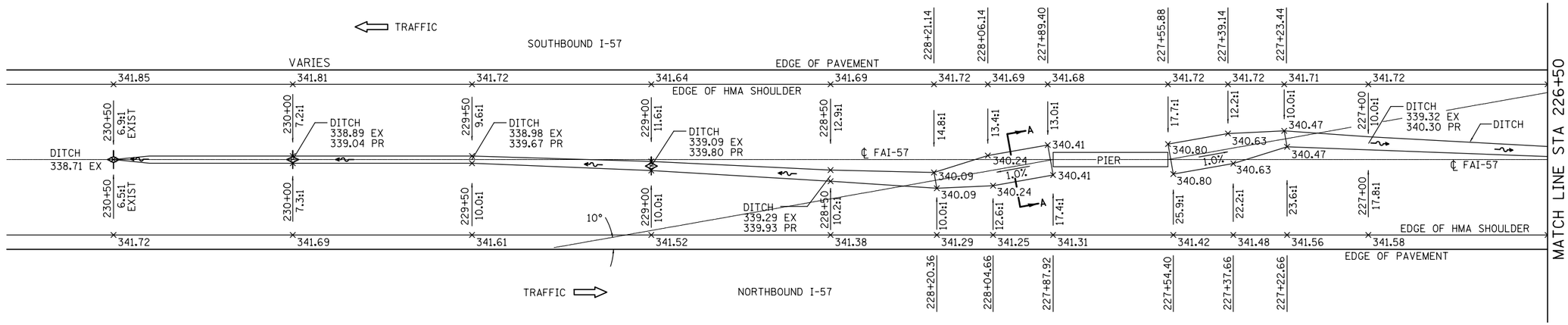

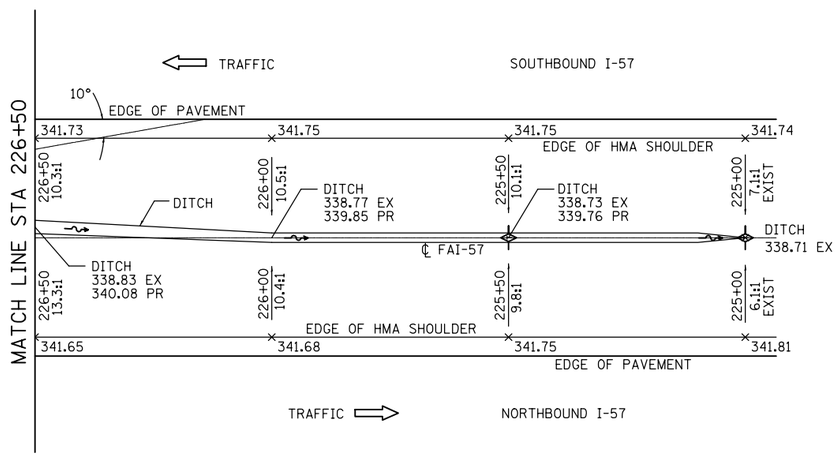

TEMPORARY DITCH CHECK (1 FOOT HEIGHT)

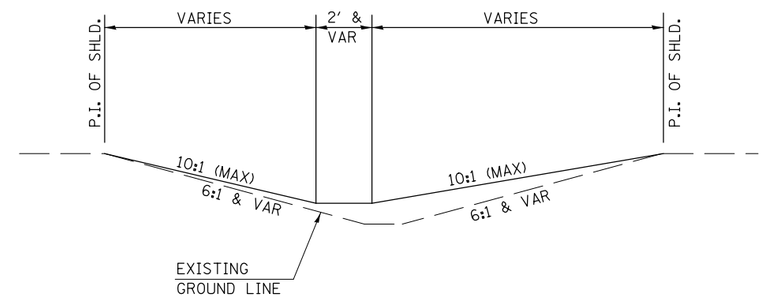

DITCH GRADING AND SHAPING DETAIL

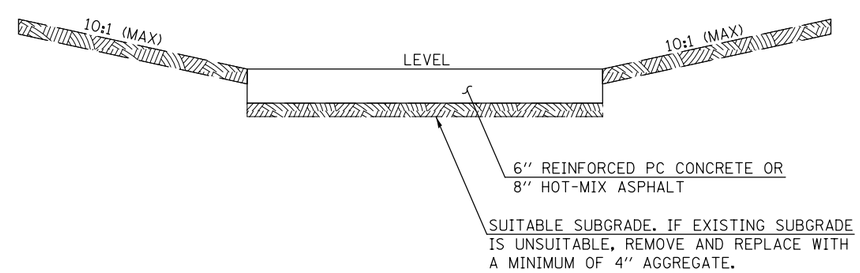

SECTION A-A

GENERAL NOTES:

1. SEE STANDARD 643001 (TEST LEVEL 3 ARRAY) FOR LAYOUT OF THE ATTENUATOR BASE AND SAND MODULES.
2. ATTENUATOR BASE SHALL BE INSTALLED PER MANUFACTURER SPECIFICATIONS AND IN ACCORDANCE WITH SECTION 643 OF THE STANDARD SPECIFICATIONS AND THIS DETAIL.
3. ATTENUATOR BASE SHALL PROVIDE A 1' BUFFER ALONG THE SIDES AND FRONT OF THE ARRAY.
4. SAND MODULE SYSTEMS SHALL BE PLACED ON A PC CONCRETE OR HMA BASE IN ACCORDANCE WITH ARTICLE 643.04 OF THE STANDARD SPECIFICATIONS.
5. EARTHWORK REQUIRED TO CONSTRUCT THE ATTENUATOR BASE AND PROVIDE THE SLOPES AS SHOWN SHALL BE CONSTRUCTED ACCORDING TO THE PLAN DETAILS AND CROSS SECTIONS.
6. THE ATTENUATORS AND ATTENUATOR BASE WILL BE MEASURED AND PAID FOR IN ACCORDANCE WITH ARTICLES 643.05 AND 643.06 OF THE STANDARD SPECIFICATIONS.

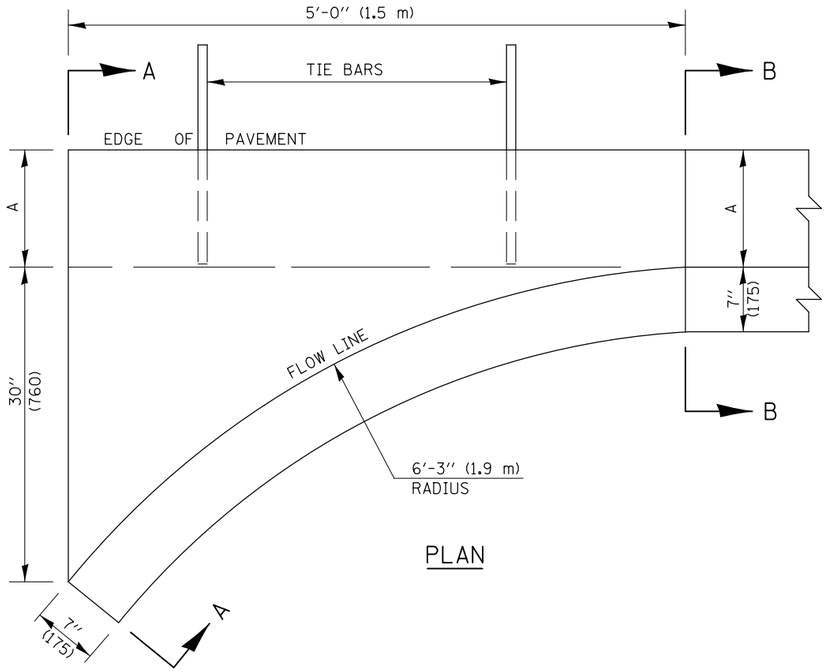

PLAN

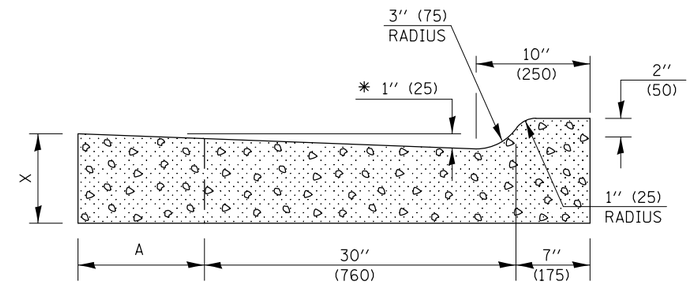

SECTION A-A

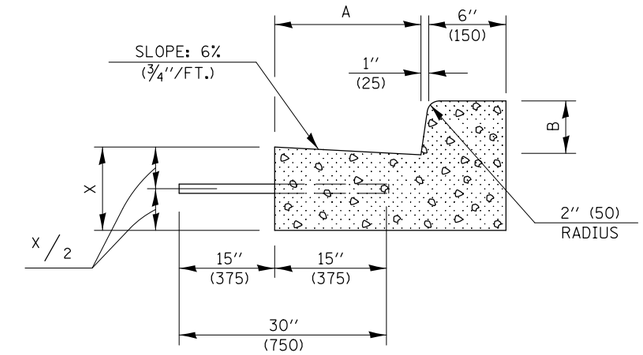

SECTION B-B

* INCREASE TO 2" (50 mm) WHERE IN THE PLANS IT IS SPECIFIED THAT THESE SPECIAL INLETS ARE TO BE CONSTRUCTED AS OUTLETS. ALL OUTLET LOCATIONS WILL BE CONFIRMED BY THE ENGINEER.

	B-6.12 (B-15.30)		B-9.12 (B-22.30)		B-6.18 (B-15.45)		B-9.18 (B-22.45)		B-6.24 (B-15.60)		B-9.24 (B-22.60)	
A	12" (300)	12" (300)	12" (300)	12" (300)	18" (450)	18" (450)	18" (450)	18" (450)	24" (600)	24" (600)	24" (600)	24" (600)
B	6" (150)	6" (150)	9" (225)	9" (225)	6" (150)	6" (150)	9" (225)	9" (225)	6" (150)	6" (150)	9" (225)	9" (225)
X	9" (225)	10" (250)	9" (225)	10" (250)	9" (225)	10" (250)	9" (225)	10" (250)	9" (225)	10" (250)	9" (225)	10" (250)
CU. YD. (m^3) CLASS SI CONCRETE (OUTLET)	0.37 (0.28)	0.42 (0.32)	0.38 (0.29)	0.42 (0.32)	0.44 (0.34)	0.49 (0.37)	0.45 (0.34)	0.50 (0.38)	0.51 (0.39)	0.56 (0.43)	0.52 (0.40)	0.57 (0.44)

GENERAL NOTES

1. CLASS SI CONCRETE SHALL BE USED THROUGHOUT.
2. TIE BARS SHALL BE NO. 6 (NO. 20) AT 36" (600 mm) CENTERS UNLESS OTHERWISE SHOWN. SPECIAL INLETS AND OUTLETS SHALL BE TIED TO THE PAVEMENT IN ACCORDANCE WITH DETAILS FOR LONGITUDINAL CONSTRUCTION JOINT SHOWN ON STANDARD 420001.
3. TIE BARS SHOWN ABOVE WILL NOT BE PAID FOR SEPARATELY BUT SHALL BE CONSIDERED AS INCIDENTAL TO CLASS SI CONCRETE (OUTLET).
4. WHEN SPECIAL INLET IS CONSTRUCTED ADJACENT TO FLEXIBLE PAVEMENT, THE TIE BARS SHALL BE OMITTED AND ALL CONSTRUCTION JOINTS SHALL BE PROVIDED WITH A DOWEL BAR CONFORMING TO ARTICLE 1006.11(b).
5. THIS WORK WILL BE PAID FOR AT THE CONTRACT UNIT PRICE PER CU. YD. (m^3) FOR CLASS SI CONCRETE (OUTLET) WHICH PRICE SHALL INCLUDE ALL LABOR AND MATERIAL AS SPECIFIED AND NO ADDITIONAL COMPENSATION WILL BE ALLOWED.

Note: All dimensions are in INCHES (millimeters) unless otherwise shown.

PRINT DRIVER = L_PD_E_B_B_W.pc3
PEN TABLE = IDOT_VERBOSE.tbl
PLOT SCALE = 1.0000
FILE NAME = D:\78454-ent-details24.dgn

ESCA CONSULTANTS, INC.

USER NAME = k.jk	DESIGNED - JHM	REVISED	
	DRAWN - JHM	REVISED	
PLOT SCALE = 0.1667 ' / in.	CHECKED - JMS	REVISED	
PLOT DATE = 12/11/2018	DATE - 08/18	REVISED	

STATE OF ILLINOIS
DEPARTMENT OF TRANSPORTATION

INLET - COMBINATION CONCRETE CURB & GUTTER (BARRIER CURB)

SHEET 1 OF 1 SHEETS STA. TO STA.

F.A.I. RTE.	SECTION	COUNTY	TOTAL SHEETS	SHEET NO.
57	(77-1-3)HB-2	PULASKI	92	44
		CONTRACT NO. 78454		
	ILLINOIS	FED. AID PROJECT		

SEEDING & MULCHING

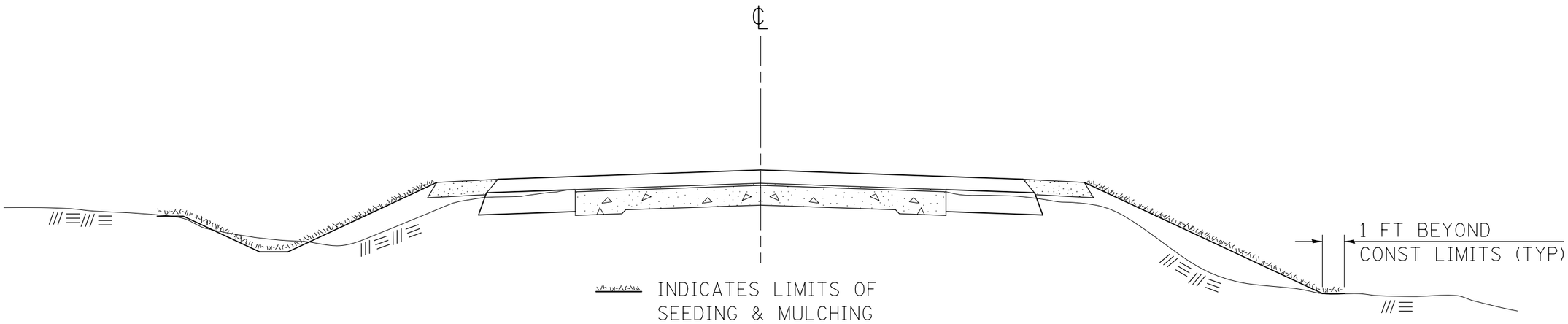

GENERAL NOTES

IN GENERAL, ALL EARTH SURFACES DISTURBED DURING CONSTRUCTION OPERATIONS SHALL BE SEEDED AND MULCHED UPON COMPLETION OF ALL GRADING OPERATIONS IN ANY PARTICLAR STAGE.

FERTILIZER NUTRIENTS AND LIMESTONE SHALL BE APPLIED TO ALL SEEDED AREAS.

SECTIONS 250 AND 251 OF THE STANDARD SPECIFICATIONS SHALL GOVERN THIS WORK EXCEPT AS SPECIFIED HEREIN OR AS NOTED IN THE SPECIAL PROVISIONS.

REVISIONS

REDRAWN	2-15-89
REVISED	8-15-94
REVISED	6-3-99
REVISED	3-27-08

STD. 9-12

PRINT DRIVER = I_PD_E_B_B_W.cfg
PEN TABLE = IDOT_VERDZ.tbl
PLOT SCALE = 1.000000
FILE NAME = C:\78454-ent-detsmisc01.dgn

ESCA CONSULTANTS, INC.

USER NAME = k.jk	DESIGNED - JHM	REVISED -	STATE OF ILLINOIS DEPARTMENT OF TRANSPORTATION
ESCA PROJECT NO. 1259.09	DRAWN - JHM	REVISED -	
PLOT SCALE = 0.1667 ' / in.	CHECKED - JMS	REVISED -	
PLOT DATE = 12/11/2018	DATE - 08/18	REVISED -	

SEEDING AND MULCHING DETAILS

SCALE: NONE | SHEET NO. 1 OF 1 SHEETS | STA. TO STA.

F.A.I. RTE.	SECTION	COUNTY	TOTAL SHEETS	SHEET NO.
57	(77-1-3)HB-2	PULASKI	92	45
		CONTRACT NO. 78454		

FED. ROAD DIST. NO. | ILLINOIS | FED. AID PROJECT

TYPICAL CROSS SECTION SHOWING STEP CONSTRUCTION ON EXISTING FILL

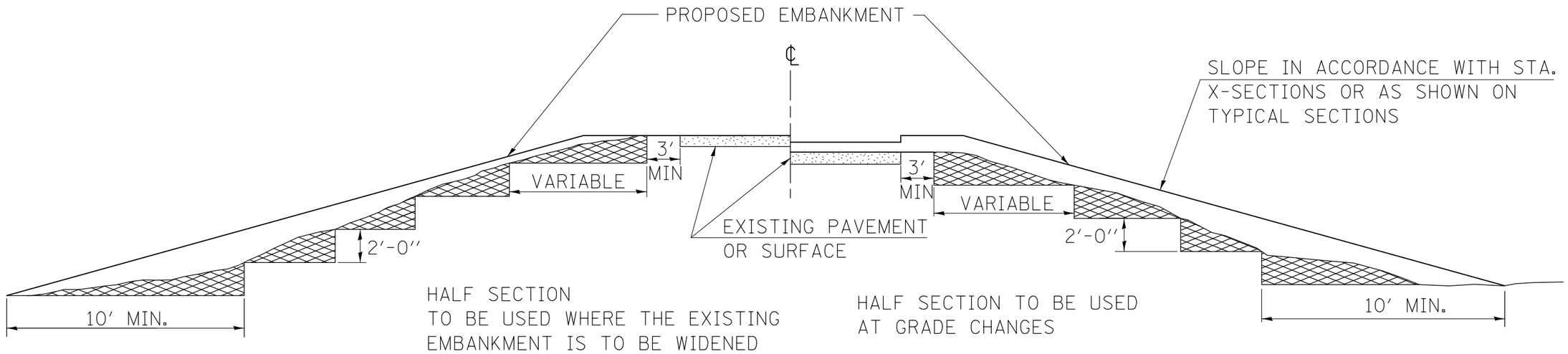

MATERIAL TO BE REMOVED AND REPLACED IN THE EMBANKMENT IN ACCORDANCE WITH ART. 205.04 OF THE STANDARD SPECIFICATION. COST TO BE INCLUDED IN THE VARIOUS ITEMS OF EXCAVATION AND NO ADDITIONAL COMPENSATION WILL BE ALLOWED BECAUSE OF THIS WORK.

REVISIONS

REDRAWN	2-15-89
REVISED	8-15-94
CHECKED	6-3-99
RESIZED	5-7-08

STD. 9-16

PRINT DRIVER = I_PD_E_B_B_Color9
PEN TABLE = IDOT_VERDZ.tbl
PLOT SCALE = 1.0000
FILE NAME = C:\PWidot\ESCA\1259.09\dgn\STD9-16-STEP-CONSTRUCTION.dgn

ESCA CONSULTANTS, INC.	USER NAME = k.jk	DESIGNED - JHM	REVISED -
	ESCA PROJECT NO. 1259.09	DRAWN - JHM	REVISED -
	PLOT SCALE = 0.1667 ′ / in.	CHECKED - JMS	REVISED -
	PLOT DATE = 12/11/2018	DATE - 08/18	REVISED -

STATE OF ILLINOIS
DEPARTMENT OF TRANSPORTATION

STEP CONSTRUCTION ON EXISTING FILL

SCALE: NONE | SHEET NO. 1 OF 1 SHEETS | STA. TO STA.

F.A.I. RTE.	SECTION	COUNTY	TOTAL SHEETS	SHEET NO.
57	(77-1-3)HB-2	PULASKI	92	46
		CONTRACT NO. 78454		

FED. ROAD DIST. NO. | ILLINOIS | FED. AID PROJECT

BENCHMARK: BM 300 Chiseled "L" on SE corner of conc. "V" ditch under SN 077-0026, Sta. 227+89 (I-57), 61.4' RT, elev. 341.27

EXISTING STRUCTURE:
SN 077-0026 was originally built in 1965 as F.A.I. 57, Section 77-1HB-3. The structure consists of four spans of a reinforced concrete deck on six W30x108 steel girders on reinforced concrete piers and open abutments. The abutments are supported on metal shell piles. The piers are supported on timber and metal shell piles. Back-to-back distance between abutments is 207'-0". The superstructure width is 28'-0" clear between the inside faces of the concrete curbs and 33'-8" out-to-out. The bridge is skewed 6°-52'-40" Right Forward. Traffic shall be maintained utilizing stage construction.

No salvage.

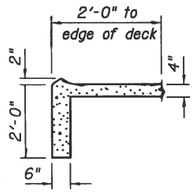

SECTION A-A

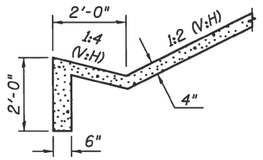

SECTION B-B

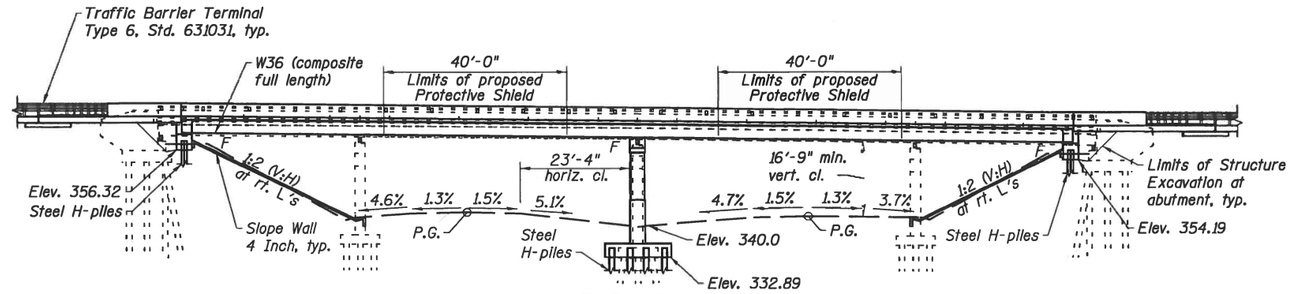

ELEVATION

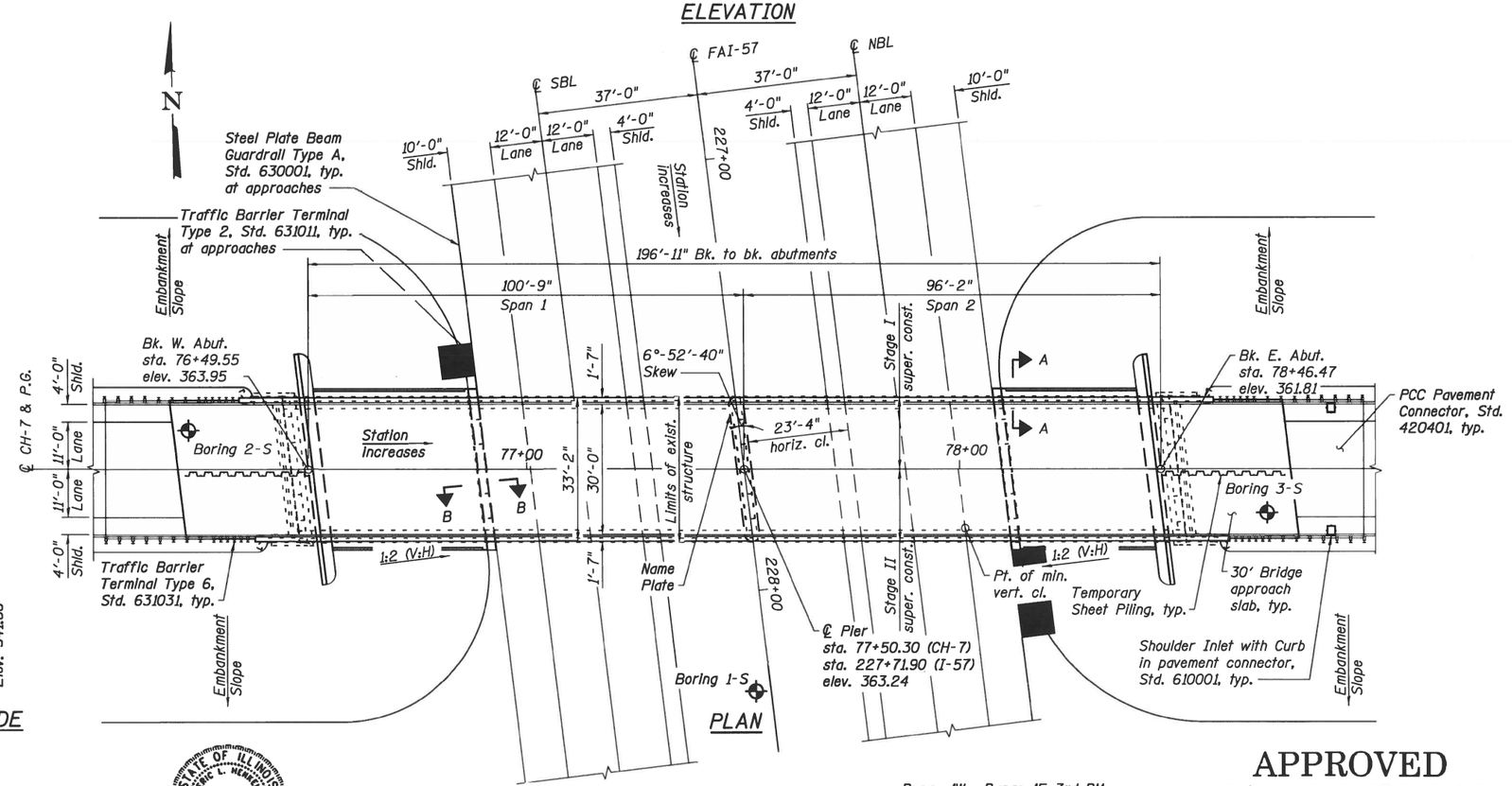

PLAN

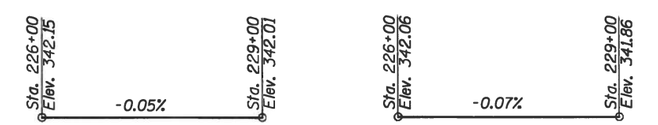

I-57 SBL PROFILE GRADE
(Along existing ℄ lanes)

I-57 NBL PROFILE GRADE
(Along existing ℄ lanes)

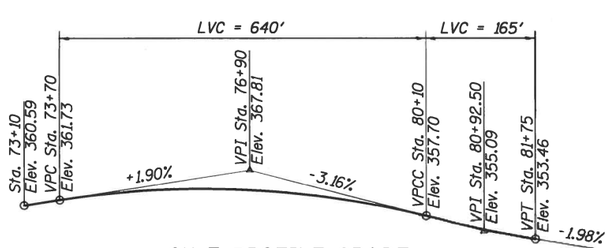

CH-7 PROFILE GRADE
(Along ℄ roadway)

STATE OF ILLINOIS
ERIC L. HERMANN
No. 6159
LICENSED STRUCTURAL ENGINEER

EXPIRES 11-30-20

SIGNATURE

11-21-18
DATE

SEISMIC DATA

Seismic Performance Zone (SPZ) = 4
Design Spectral Acceleration at 1.0 sec. (S_{D1}) = 0.677g
Design Spectral Acceleration at 0.2 sec. (S_{Ds}) = 1.648g
Soil Site Class = D

DESIGN SPECIFICATIONS

2017 AASHTO LRFD
Bridge Design Specifications 8th Edition

LOADING HL-93

Allow 50 psf for future wearing surface

DESIGN STRESSES FIELD UNITS

f'c = 3,500 psi (substructure)
f'c = 4,000 psi (superstructure)
fy = 50,000 psi (AASHTO M270 Grade 50)
fy = 60,000 psi (reinforcement)

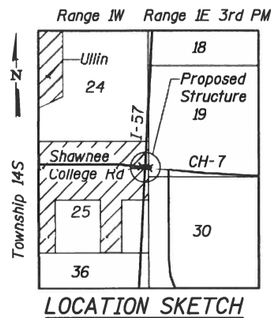

LOCATION SKETCH

APPROVED
FOR STRUCTURAL ADEQUACY ONLY

ENGINEER OF BRIDGES AND STRUCTURES

GENERAL PLAN & ELEVATION
CH-7 (SHAWNEE COLLEGE RD)
OVER I-57 & US 51
F.A.I. RTE. 57 - SECTION (77-1-3)HB-2
PULASKI COUNTY
STATION 77+50.30
STRUCTURE NO. 077-0041

ESCA CONSULTANTS, INC.

USER NAME = kjk	DES'GNED - RTM	05/18	REVISED -		
ESCA PROJECT NO. 1259.09	CHECKED - KJA/ELH	05/18	REVISED -		
PLOT SCALE = 0: 2 ':" / in	DRAWN - KAH/JMK	08/18	REVISED -		
PLOT DATE = 12/11/2018 7:58:34 AM	CHECKED - RTM	11/18	REVISED -		

STATE OF ILLINOIS
DEPARTMENT OF TRANSPORTATION

SHEET NO. 1 OF 26 SHEETS

F.A.I. RTE.	SECTION	COUNTY	TOTAL SHEETS	SHEET NO.
57	(77-1-3)HB-2	PULASKI	92	4 -7
		CONTRACT NO. 78454		
		ILLINOIS FED. AID PROJECT		

GENERAL NOTES

1. Fasteners shall be ASTM A325 Type 1, mechanically galvanized bolts. Bolts 7/8" ∅, holes 15/16" ∅, unless otherwise noted.
2. Calculated weight of Structural Steel = 222,550 lbs. (Grade 50)
   19,250 lbs. (Grade 36)
3. No field welding is permitted except as specified in the contract documents.
4. Reinforcement bars designated (E) shall be epoxy coated.
5. Bearing seat surfaces shall be constructed or adjusted to the designated elevations within a tolerance of 1/8 in. (0.01 ft.). Adjustment shall be made either by grinding the surface or by shimming the bearings.
6. The existing structural steel coating contains lead. The Contractor shall take appropriate precautions to deal with the presence of lead on this project.
7. The Inorganic Zinc Rich Primer / Acrylic / Acrylic Paint System shall be used for shop and field painting of new structural steel except where otherwise noted. The color of the final finish coat for all interior steel surfaces shall be gray, Munsell No. 5B 7/1. The color of the final finish coat for the exterior and bottom flange of the fascia beams shall be Interstate Green, Munsell No. 7.5G 4/8.
8. Slipforming of the parapets is not allowed.
9. Slope wall shall be reinforced with welded fabric, 6in. x 6in. - W4.0 x W4.0, weight 58 lbs. per 100 sq.ft.
10. The costs of concrete slope wall removal and bridge rail removal are included in Removal of Existing Structures. Removal of the existing protective shield system is included in the cost of Removal of Existing Structures.

STATION 77+50.30
BUILT 201_ BY
STATE OF ILLINOIS
F.A.I. RT. 57 SEC. (77-1-3)HB-2
LOADING HL-93
STR. NO. 077-0041

NAME PLATE
See Std. 515001

STRUCTURE INDEX OF SHEETS

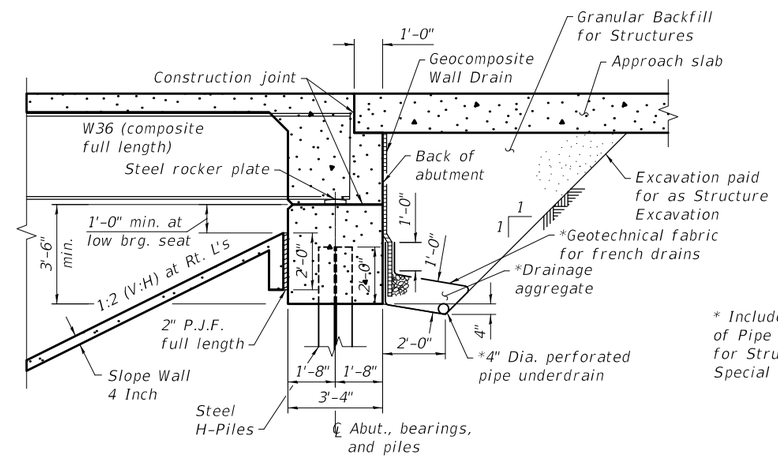

* Included in the cost of Pipe Underdrains for Structures. (See Special Provisions)

SECTION THROUGH ABUTMENT

(Horizontal dimensions at rt. angles)

Note:
All drainage system components shall extend to 2'-0" from the end of each wingwall except an outlet pipe shall extend until intersecting with the side slopes. The pipes shall drain into concrete headwalls. (See Article 601.05 of the Standard Specifications and Highway Standard 601101).

TOTAL BILL OF MATERIAL

ITEM	UNIT	SUPER	SUB	TOTAL
Removal of Existing Structures	Each			1
Protective Shield	Sq. Yd.	300		300
Structure Excavation	Cu. Yd.		275	275
Concrete Structures	Cu. Yd.	19.8	131.0	150.8
Concrete Superstructure	Cu. Yd.	251.7		251.7
Protective Coat	Sq. Yd.	1043		1043
Concrete Superstructure (Approach Slab)	Cu. Yd.	90.9		90.9
Furnishing and Erecting Structural Steel	L Sum	1		1
Stud Shear Connectors	Each	2466		2466
Reinforcement Bars, Epoxy Coated	Pound	91930	21380	113310
Bar Splicers	Each	864	80	944
Steel Railing (Temporary)	Foot	512		512
Slope Wall 4 Inch	Sq. Yd.		330	330
Furnishing Steel Piles HP14x89	Foot		2125	2125
Furnishing Steel Piles HP14x117	Foot		1211	1211
Driving Piles	Foot		3336	3336
Test Pile Steel HP14x89	Each		1	1
Test Pile Steel HP14x117	Each		2	2
Pile Shoes	Each		42	42
Name Plates	Each	1		1
Anchor Bolts, 1"	Each		36	36
Temporary Sheet Piling	Sq. Ft.		500	500
Geocomposite Wall Drain	Sq. Yd.		66	66
Bridge Deck Grooving	Sq. Yd.	796		796
Granular Backfill for Structures	Cu. Yd.		104	104
Pipe Underdrains for Structures 4"	Foot		124	124
Temporary Support System	Each		1	1

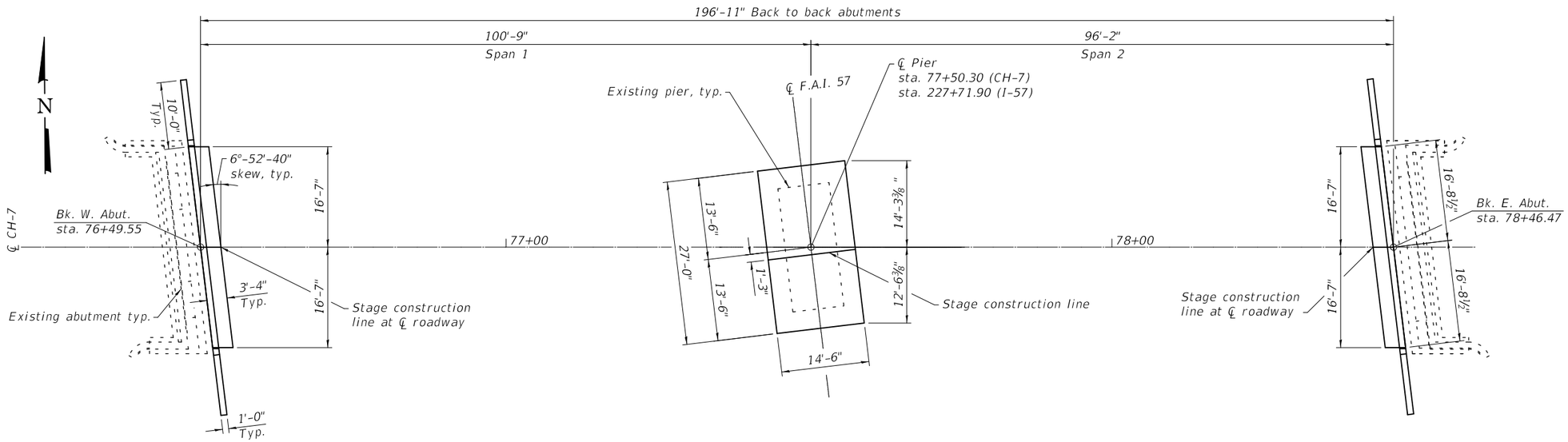

PLAN

ESCA CONSULTANTS, INC. ENGINEERS & ARCHITECTS	USER NAME = kjk	DESIGNED - KJA 05/18	REVISED -	STATE OF ILLINOIS DEPARTMENT OF TRANSPORTATION	SUBSTRUCTURE LAYOUT STRUCTURE NO. 077-0041	F.A.I. RTE.	SECTION	COUNTY	TOTAL SHEETS / SHEET NO.
	ESCA PROJECT NO. 1259.09	CHECKED - RTM/ELH 05/18	REVISED -			57	(77-1-3)HB-2	PULASKI	92 / 49
	PLOT SCALE = 0:2 ':" / in.	DRAWN - KAH/JMK 08/18	REVISED -					CONTRACT NO. 78454	
	PLOT DATE = 12/11/2018 7:58:36 AM	CHECKED - KJA 08/18	REVISED -		SHEET NO. 3 OF 26 SHEETS		ILLINOIS	FED. AID PROJECT	

PRINT DRIVER = HP_TDRV15#
PEN TABLE = PENTBL54
PAGE SIZE = 41"X32"
FILE NAME = D770041-78454-03-Sub_layout.dgn

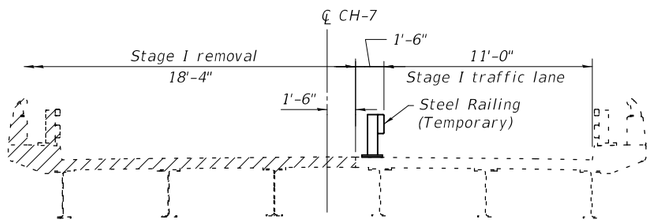

STAGE I REMOVAL
(Looking East)

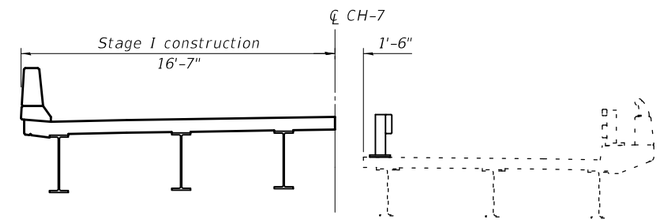

STAGE I CONSTRUCTION
(Looking East)

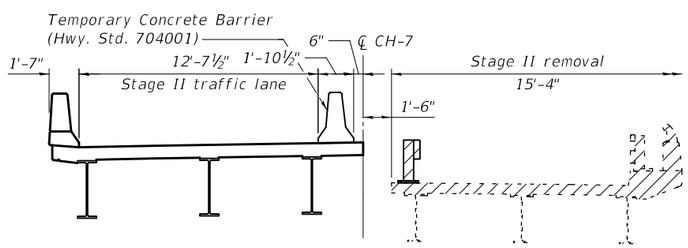

STAGE II REMOVAL
(Looking East)

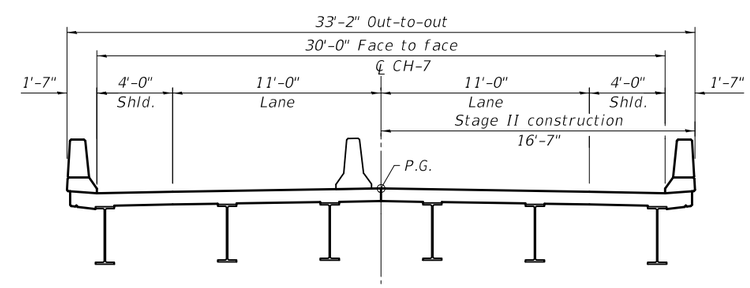

STAGE II CONSTRUCTION
(Looking East)

Note: For quantity of Temporary Concrete Barrier, see Roadway Plans.

PRINT DRIVER = $DLTDRV$$
PEN TABLE = $PENTBL$$
LAYOUT NAME = $$
FILE NAME = $77$$

ESCA CONSULTANTS, INC.
CIVIL & STRUCTURAL ENGINEERS

USER NAME = kjk	DESIGNED - KJA	05/18	REVISED -		
ESCA PROJECT NO. 1259.09	CHECKED - RTM/ELH	05/18	REVISED -		
PLOT SCALE = 0:2 ':" / in.	DRAWN - KAH/JMK	08/18	REVISED -		
PLOT DATE = 12/11/2018 7:58:37 AM	CHECKED - KJA	11/18	REVISED -		

STATE OF ILLINOIS
DEPARTMENT OF TRANSPORTATION

STAGE CONSTRUCTION DETAILS
STRUCTURE NO. 077-0041

SHEET NO. 4 OF 26 SHEETS

F.A.I. RTE.	SECTION	COUNTY	TOTAL SHEETS	SHEET NO.
57	(77-1-3)HB-2	PULASKI	92	50
		CONTRACT NO. 78454		
	ILLINOIS	FED. AID PROJECT		

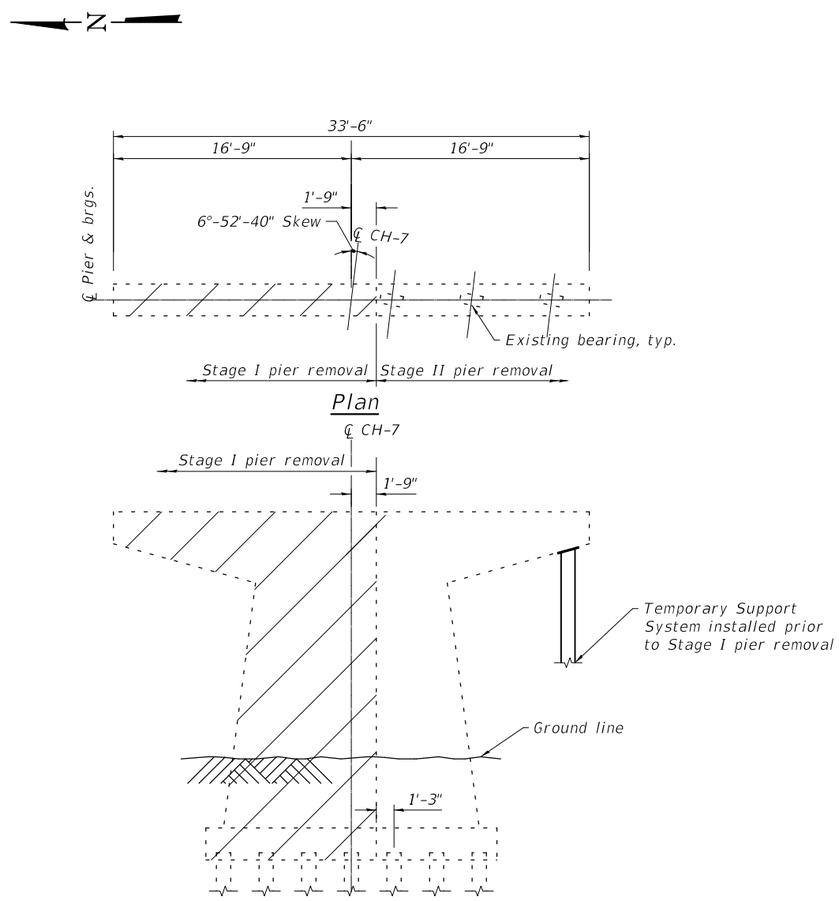

Note: Existing end piers to be completely removed in Stage II

Elevation

CENTER PIER REMOVAL SKETCH

(Looking East)

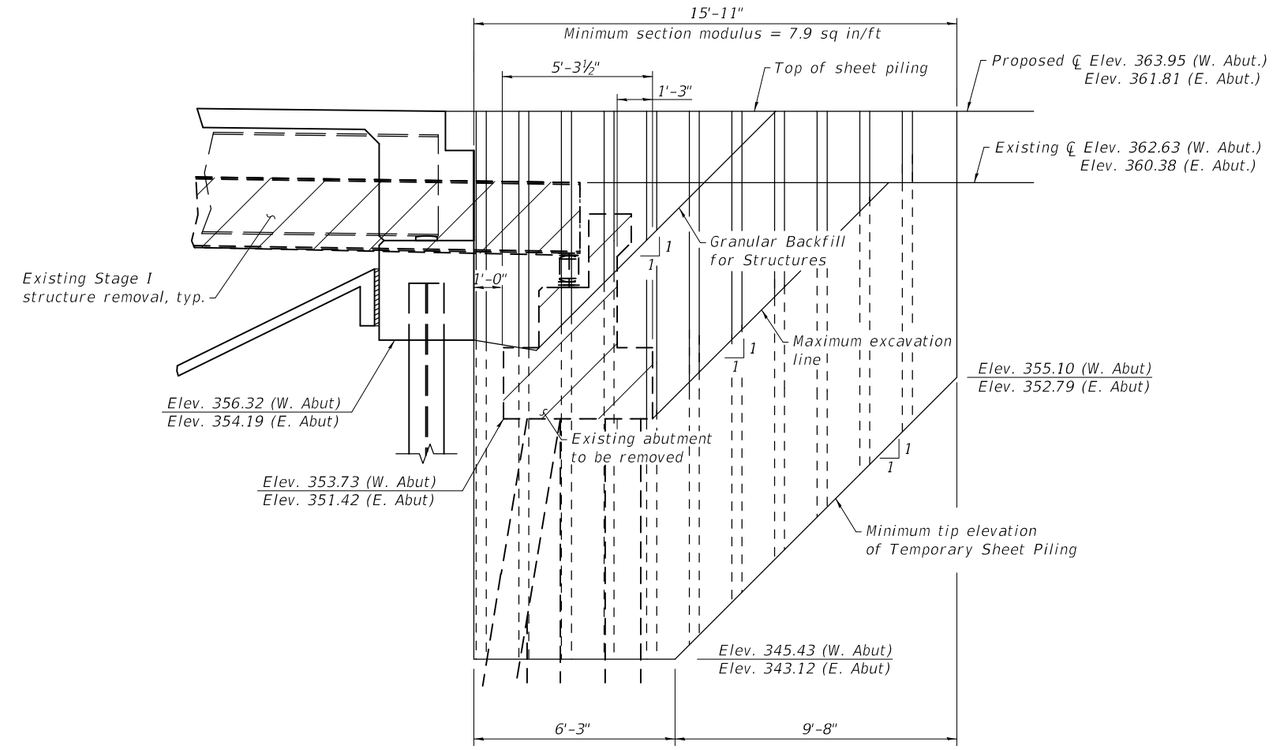

TEMPORARY SHEET PILING

Notes:

If the Contractor chooses to alter the temporary cantilevered sheet piling design requirements shown on the plans, a design submittal including plan details and calculations will be required for review and acceptance by the Engineer.

The Contractor shall connect the first sheet to the existing abutment wall to ensure stability of sheets driven to the top of the existing footing. This connection shall be reviewed and accepted by the Engineer and included in the cost for Temporary Sheet Piling.

Existing structure details are taken from existing plans.

Dimensions and slopes are shown along the Temporary Sheet Piling unless noted otherwise.

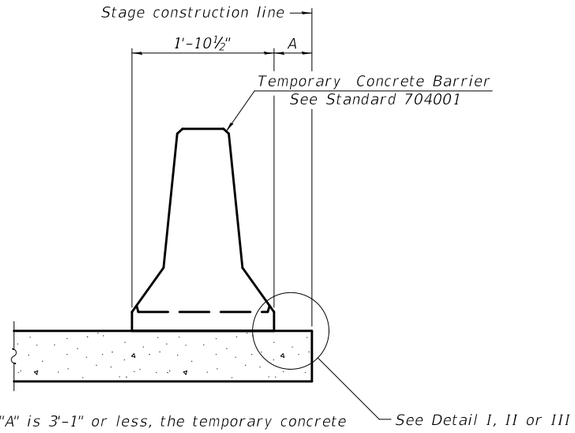

When "A" is 3'-1" or less, the temporary concrete barrier shall be restrained to the new slab according to Detail I, II or III. No restraint is required when "A" is greater than 3'-1".

NEW SLAB OR NEW DECK BEAM

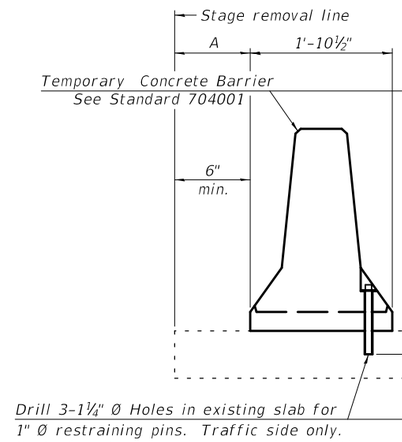

Drill 3-1¼" Ø Holes in existing slab for 1" Ø restraining pins. Traffic side only. Cost of restraining pins are included with Temporary Concrete Barrier. No restraint is required when "A" is greater than 3'-1".

EXISTING SLAB

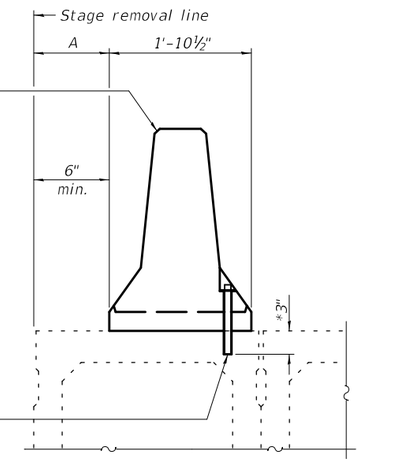

* When hot-mix asphalt wearng surface is present, embedment shall be 3" plus the wearing surface depth.

EXISTING DECK BEAM

SECTIONS THRU SLAB OR DECK BEAM

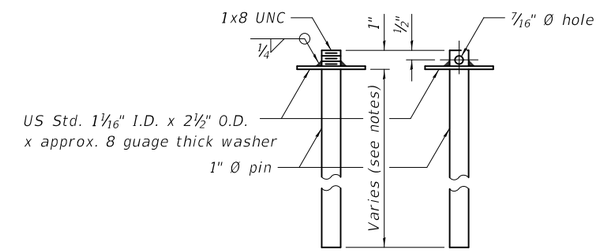

RESTRAINING PIN

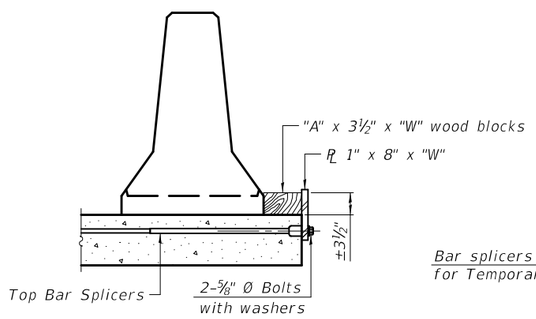

DETAIL I

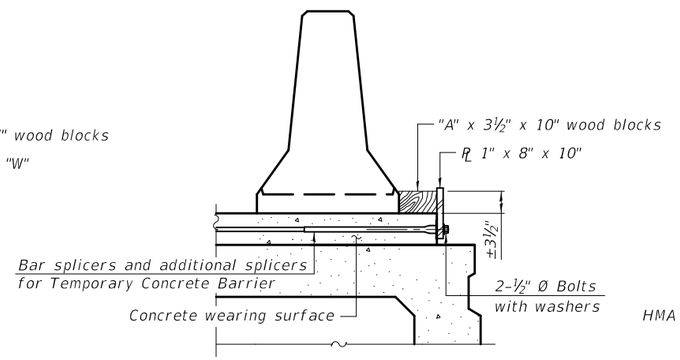

DETAIL II

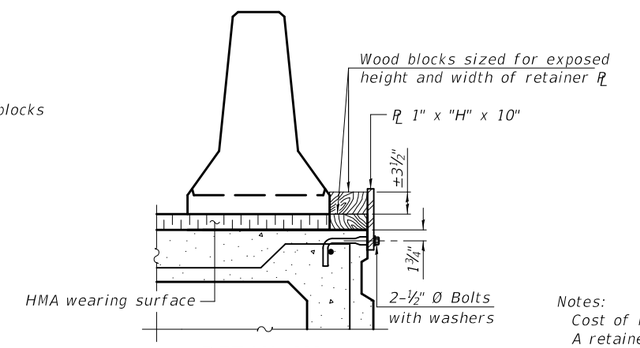

DETAIL III

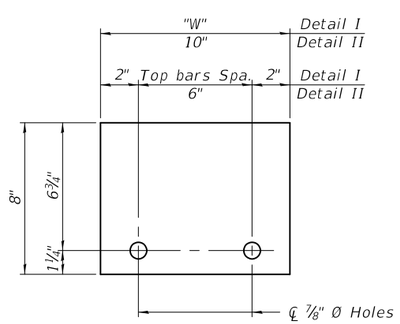

STEEL RETAINER PL 1" x 8" x "W"

(Detail I and II)

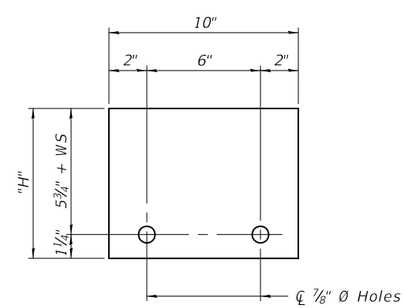

STEEL RETAINER PL 1" x "H" x 10"

(Detail III)

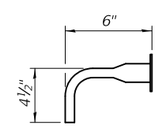

BAR SPLICER FOR #4 BAR - DETAIL III

Notes:

Cost of retainer assembly is included with Temporary Concrete Barrier.

A retainer assembly shall be located at the approximate ℄ of each temporary concrete barrier.

The retainer plate shall not be removed until the concrete on the adjacent stage is ready to be poured. For Detail III applications the retainer plate shall not be removed until just prior to placing the adjacent beam.

When the 'A' dimension is less than 1½", the wood block shall be omitted and the barrier shall be placed in direct contact with the steel retainer plate. For deck beam applications the minimum required 'A' distance is 6" to accommodate the shear key clamping device.

Detail I - Installation for a new bridge deck or bridge slab.

Detail II - Installation for a new deck beam with an initial concrete wearing surface. Additional bar splicers shall be provided at 6'-0" centers and paired with the bar splicers of the concrete wearing surface reinforcement to accommodate the installation of the retainer assemblies. The cost of the additional bar splicers is included with the concrete wearing surface.

Detail III - Installation for a new deck beam with no initial wearing surface or with an initial hot-mix asphalt (HMA) wearing surface present. The deck beam directly beneath the temporary concrete barrier shall be fabricated with bar splicer inserts in the side of the beam, as detailed, to accommodate the installation of the retainer assemblies. A pair of bar splicers, 6" apart, shall be placed at 6'-0" centers along the length of the beam. The cost of the bar splicers is included with the deck beam.

R-27

8-11-2017

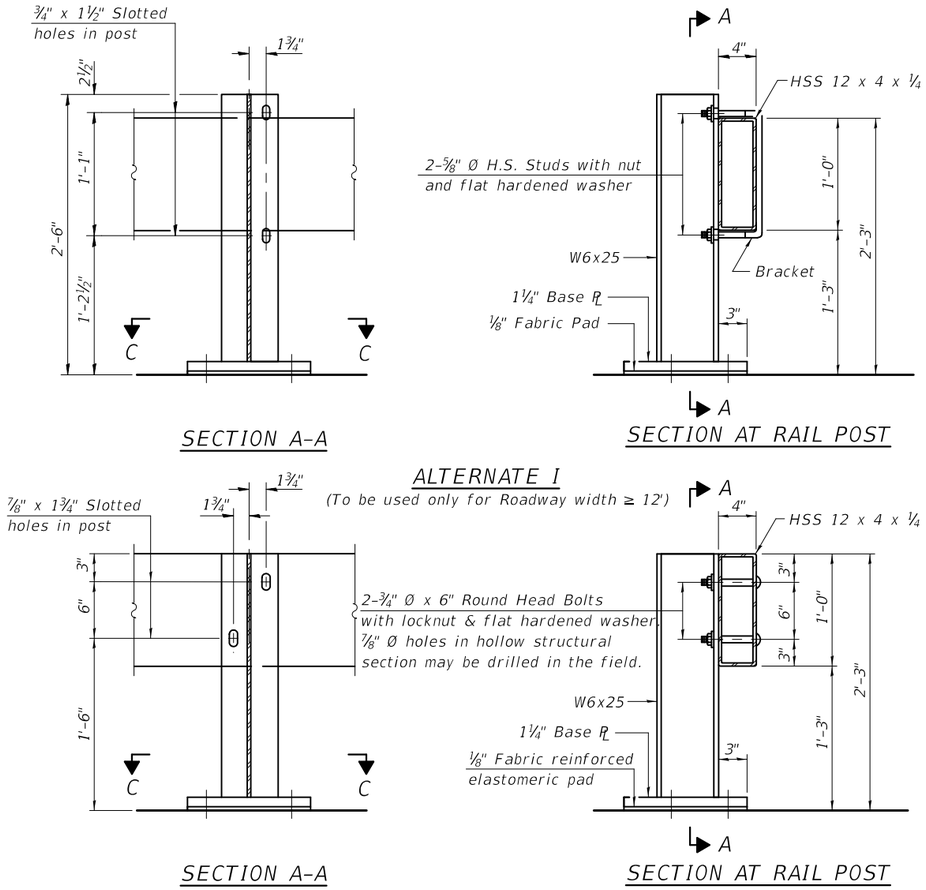

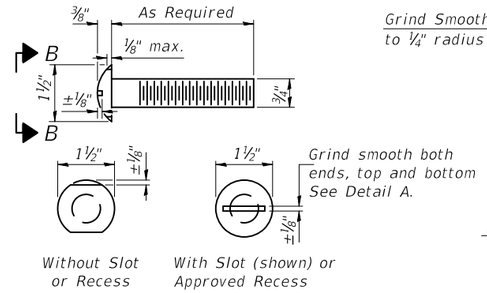

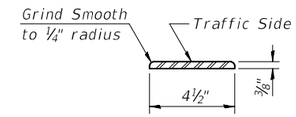

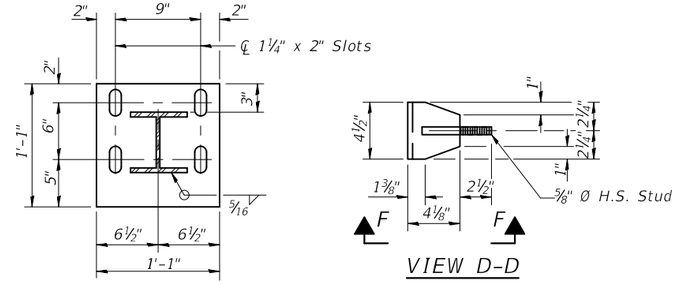

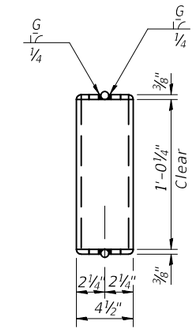

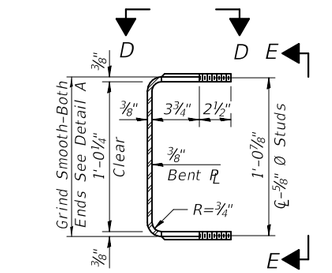

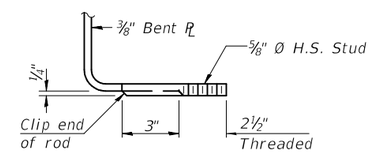

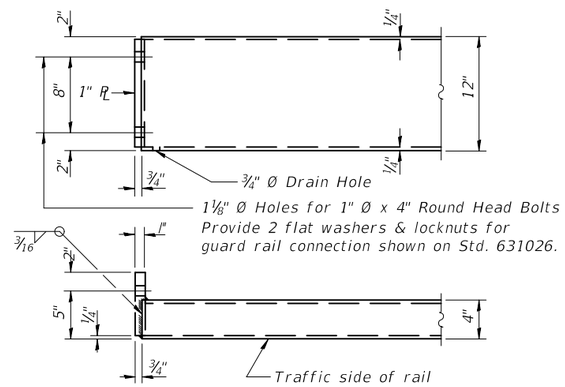

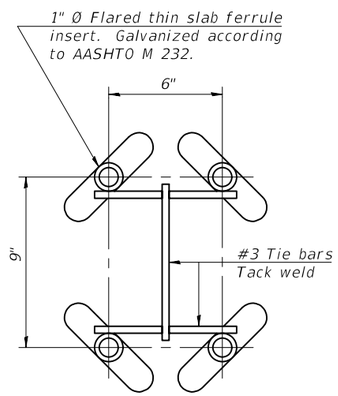

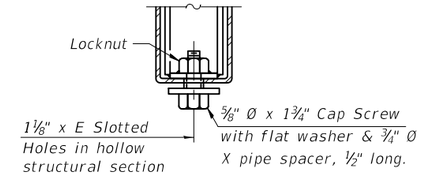

SPLICE DIMENSIONS

T	D	A	B	C	E
≤ 4"	2 1/2"	1'-8"	2"	4"	2 1/2"
> 4" ≤ 6 1/2"	3 3/4"	2'-0"	2 1/2"	5 1/2"	3 1/2"
> 6 1/2" ≤ 9"	5"	2'-4"	3 1/2"	6 1/2"	9"
> 9" ≤ 13"	7"	2'-10"	4 1/2"	8 1/2"	11"
Rail Splice	1/4"	1'-8"	2"	4"	——

T = Total movement at expansion joint as shown on the design plans.

Notes:

The contact surfaces between post flange, rail and inside face of bracket for Alternate I shall be free of all lubricants.

The nut for 5/8" Ø high strength studs used in Alternate I to connect bracket to post shall be tightened to a snug fit and given an additional one half turn.

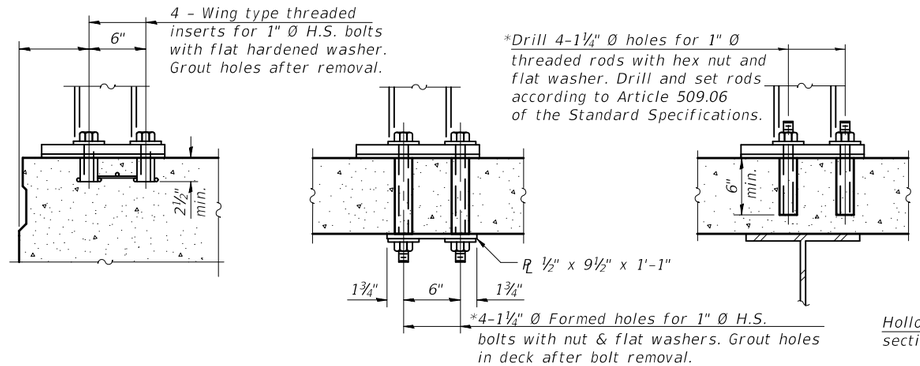

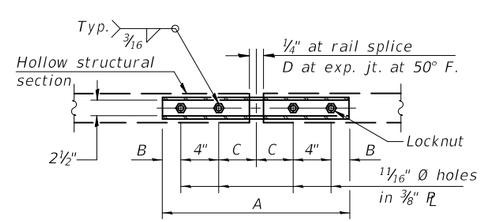

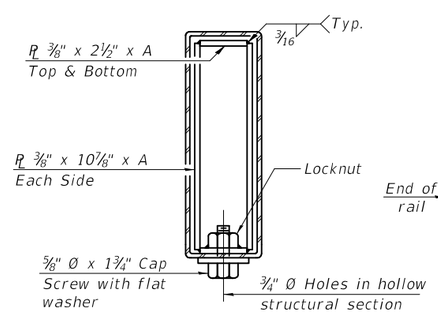

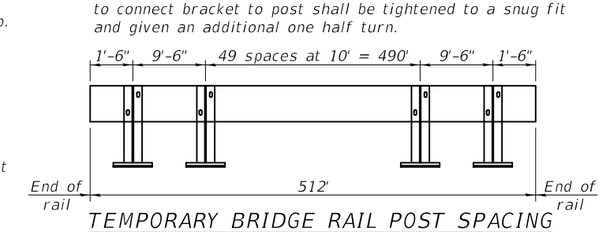

BILL OF MATERIAL

Item	Unit	Quantity
Steel Railing (Temporary)	Foot	512

R-25 8-11-2017 (10'-9" Maximum Post Spacing)

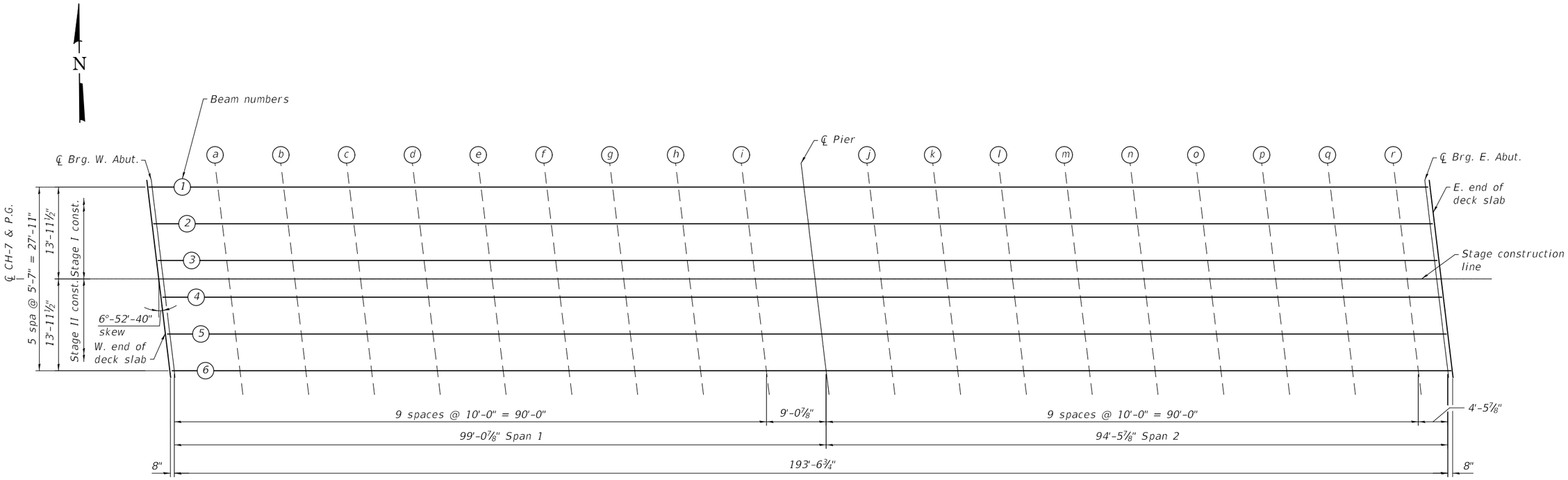

PLAN

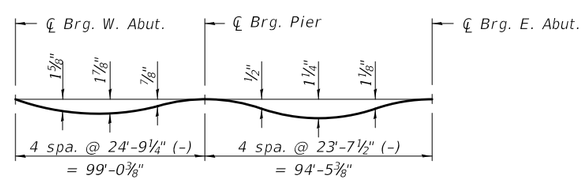

DEAD LOAD DEFLECTION DIAGRAM

(Includes weight of concrete only.)

Note:
The above deflections are not to be used in the field if the engineer is working from the grade elevations adjusted for dead load deflections as shown on the following sheet.

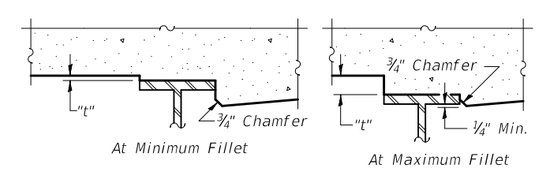

To determine "t": After all structural steel has been erected, elevations of the top flanges of the beams shall be taken at intervals shown on this sheet. These elevations subtracted from the "Theoretical Grade Elevations Adjusted for Dead Load Deflection" shown on the following sheet, minus slab thickness, equals the fillet heights "t" above top flange of beams.

FILLET HEIGHTS

PRINT DRIVER = $PLTDRV$
PEN TABLE = $PENTBL$
PLOT SCALE = 1:1
FILE NAME = 077D041-78454-BR-TSlabElev.dgn

ESCA CONSULTANTS, INC. CIVIL & STRUCTURAL ENGINEERS	USER NAME = kjk	DESIGNED - RTM 05/18	REVISED -	STATE OF ILLINOIS DEPARTMENT OF TRANSPORTATION	TOP OF SLAB ELEVATIONS STRUCTURE NO. 077-0041	F.A.I. RTE. 57	SECTION (77-1-3)HB-2
	ESCA PROJECT NO. 1259.09	CHECKED - KJA/ELH 05/18	REVISED -			COUNTY PULASKI	TOTAL SHEETS 92 / SHEET NO. 54
	PLOT SCALE = 0:2 ':' / in.	DRAWN - KAH/JMK 08/18	REVISED -			CONTRACT NO. 78454	
	PLOT DATE = 12/11/2018 7:58:40 AM	CHECKED - RTM 08/18	REVISED -		SHEET NO. 8 OF 26 SHEETS	ILLINOIS	FED. AID PROJECT

BEAM 1

Location	Station	Offset (ft.)	Theoretical Grade Elevations	Theoretical Grade Elevations Adjusted For Dead Load Deflection
W. End of Slab	76+48.88	-13.96	363.73	363.73
℄ Brg. W. Abut.	76+49.55	-13.96	363.73	363.73
a	76+59.55	-13.96	363.69	363.75
b	76+69.55	-13.96	363.65	363.76
c	76+79.55	-13.96	363.60	363.75
d	76+89.55	-13.96	363.54	363.70
e	76+99.55	-13.96	363.48	363.63
f	77+09.55	-13.96	363.40	363.53
g	77+19.55	-13.96	363.32	363.41
h	77+29.55	-13.96	363.23	363.28
i	77+39.55	-13.96	363.13	363.15
℄ Pier	77+48.62	-13.96	363.03	363.03
j	77+58.62	-13.96	362.92	362.93
k	77+68.62	-13.96	362.80	362.83
l	77+78.62	-13.96	362.67	362.73
m	77+88.62	-13.96	362.53	362.63
n	77+98.62	-13.96	362.39	362.50
o	78+08.62	-13.96	362.24	362.35
p	78+18.62	-13.96	362.08	362.17
q	78+28.62	-13.96	361.91	361.97
r	78+38.62	-13.96	361.73	361.75
℄ Brg. E. Abut.	78+43.11	-13.96	361.65	361.65
E. End of Slab	78+43.78	-13.96	361.64	361.64

BEAM 2

Location	Station	Offset (ft.)	Theoretical Grade Elevations	Theoretical Grade Elevations Adjusted For Dead Load Deflection
W. End of Slab	76+49.55	-8.38	363.83	363.83
℄ Brg. W. Abut.	76+50.22	-8.38	363.82	363.82
a	76+60.22	-8.38	363.79	363.85
b	76+70.22	-8.38	363.75	363.86
c	76+80.22	-8.38	363.69	363.84
d	76+90.22	-8.38	363.64	363.80
e	77+00.22	-8.38	363.57	363.72
f	77+10.22	-8.38	363.49	363.62
g	77+20.22	-8.38	363.41	363.50
h	77+30.22	-8.38	363.32	363.37
i	77+40.22	-8.38	363.22	363.24
℄ Pier	77+49.29	-8.38	363.13	363.13
j	77+59.29	-8.38	363.01	363.02
k	77+69.29	-8.38	362.89	362.92
l	77+79.29	-8.38	362.76	362.82
m	77+89.29	-8.38	362.62	362.72
n	77+99.29	-8.38	362.48	362.59
o	78+09.29	-8.38	362.32	362.44
p	78+19.29	-8.38	362.16	362.26
q	78+29.29	-8.38	361.99	362.06
r	78+39.29	-8.38	361.82	361.84
℄ Brg. E. Abut.	78+43.78	-8.38	361.73	361.73
E. End of Slab	78+44.45	-8.38	361.72	361.72

BEAM 3

Location	Station	Offset (ft.)	Theoretical Grade Elevations	Theoretical Grade Elevations Adjusted For Dead Load Deflection
W. End of Slab	76+50.22	-2.79	363.91	363.91
℄ Brg. W. Abut.	76+50.89	-2.79	363.91	363.91
a	76+60.89	-2.79	363.87	363.93
b	76+70.89	-2.79	363.83	363.94
c	76+80.89	-2.79	363.77	363.92
d	76+90.89	-2.79	363.72	363.88
e	77+00.89	-2.79	363.65	363.80
f	77+10.89	-2.79	363.57	363.70
g	77+20.89	-2.79	363.49	363.58
h	77+30.89	-2.79	363.40	363.45
i	77+40.89	-2.79	363.30	363.31
℄ Pier	77+49.96	-2.79	363.20	363.20
j	77+59.96	-2.79	363.09	363.10
k	77+69.96	-2.79	362.97	363.00
l	77+79.96	-2.79	362.84	362.90
m	77+89.96	-2.79	362.70	362.79
n	77+99.96	-2.79	362.55	362.66
o	78+09.96	-2.79	362.40	362.51
p	78+19.96	-2.79	362.24	362.33
q	78+29.96	-2.79	362.07	362.13
r	78+39.96	-2.79	361.89	361.91
℄ Brg. E. Abut.	78+44.45	-2.79	361.81	361.81
E. End of Slab	78+45.12	-2.79	361.79	361.79

℄ ROADWAY, PROFILE GRADE & STAGE CONSTRUCTION LINE

Location	Station	Offset (ft.)	Theoretical Grade Elevations	Theoretical Grade Elevations Adjusted For Dead Load Deflection
W. End of Slab	76+50.56	0.00	363.95	363.95
℄ Brg. W. Abut.	76+51.23	0.00	363.95	363.95
a	76+61.23	0.00	363.91	363.97
b	76+71.23	0.00	363.87	363.98
c	76+81.23	0.00	363.81	363.96
d	76+91.23	0.00	363.76	363.92
e	77+01.23	0.00	363.69	363.84
f	77+11.23	0.00	363.61	363.74
g	77+21.23	0.00	363.53	363.62
h	77+31.23	0.00	363.44	363.49
i	77+41.23	0.00	363.34	363.35
℄ Pier	77+50.30	0.00	363.24	363.24
j	77+60.30	0.00	363.13	363.13
k	77+70.30	0.00	363.00	363.04
l	77+80.30	0.00	362.87	362.94
m	77+90.30	0.00	362.73	362.83
n	78+00.30	0.00	362.59	362.70
o	78+10.30	0.00	362.43	362.55
p	78+20.30	0.00	362.27	362.37
q	78+30.30	0.00	362.10	362.17
r	78+40.30	0.00	361.92	361.95
℄ Brg. E. Abut.	78+44.79	0.00	361.84	361.84
E. End of Slab	78+45.46	0.00	361.83	361.83

BEAM 4

Location	Station	Offset (ft.)	Theoretical Grade Elevations	Theoretical Grade Elevations Adjusted For Dead Load Deflection
W. End of Slab	76+50.90	2.79	363.91	363.91
℄ Brg. W. Abut.	76+51.57	2.79	363.90	363.90
a	76+61.57	2.79	363.87	363.93
b	76+71.57	2.79	363.82	363.94
c	76+81.57	2.79	363.77	363.92
d	76+91.57	2.79	363.71	363.87
e	77+01.57	2.79	363.64	363.80
f	77+11.57	2.79	363.57	363.70
g	77+21.57	2.79	363.48	363.57
h	77+31.57	2.79	363.39	363.44
i	77+41.57	2.79	363.29	363.31
℄ Pier	77+50.64	2.79	363.19	363.19
j	77+60.64	2.79	363.08	363.09
k	77+70.64	2.79	362.96	362.99
l	77+80.64	2.79	362.83	362.89
m	77+90.64	2.79	362.69	362.78
n	78+00.64	2.79	362.54	362.65
o	78+10.64	2.79	362.39	362.50
p	78+20.64	2.79	362.22	362.32
q	78+30.64	2.79	362.05	362.12
r	78+40.64	2.79	361.88	361.90
℄ Brg. E. Abut.	78+45.13	2.79	361.79	361.79
E. End of Slab	78+45.80	2.79	361.78	361.78

BEAM 5

Location	Station	Offset (ft.)	Theoretical Grade Elevations	Theoretical Grade Elevations Adjusted For Dead Load Deflection
W. End of Slab	76+51.57	8.38	363.82	363.82
℄ Brg. W. Abut.	76+52.24	8.38	363.82	363.82
a	76+62.24	8.38	363.78	363.84
b	76+72.24	8.38	363.74	363.85
c	76+82.24	8.38	363.68	363.83
d	76+92.24	8.38	363.62	363.78
e	77+02.24	8.38	363.56	363.71
f	77+12.24	8.38	363.48	363.61
g	77+22.24	8.38	363.39	363.48
h	77+32.24	8.38	363.30	363.35
i	77+42.24	8.38	363.20	363.22
℄ Pier	77+51.31	8.38	363.10	363.10
j	77+61.31	8.38	362.99	363.00
k	77+71.31	8.38	362.86	362.90
l	77+81.31	8.38	362.73	362.80
m	77+91.31	8.38	362.59	362.69
n	78+01.31	8.38	362.45	362.56
o	78+11.31	8.38	362.29	362.41
p	78+21.31	8.38	362.13	362.23
q	78+31.31	8.38	361.96	362.03
r	78+41.31	8.38	361.78	361.80
℄ Brg. E. Abut.	78+45.80	8.38	361.70	361.70
E. End of Slab	78+46.47	8.38	361.68	361.68

BEAM 6

Location	Station	Offset (ft.)	Theoretical Grade Elevations	Theoretical Grade Elevations Adjusted For Dead Load Deflection
W. End of Slab	76+52.24	13.96	363.72	363.72
℄ Brg. W. Abut.	76+52.91	13.96	363.72	363.72
a	76+62.91	13.96	363.68	363.74
b	76+72.91	13.96	363.63	363.75
c	76+82.91	13.96	363.58	363.73
d	76+92.91	13.96	363.52	363.68
e	77+02.91	13.96	363.45	363.60
f	77+12.91	13.96	363.37	363.50
g	77+22.91	13.96	363.29	363.38
h	77+32.91	13.96	363.20	363.25
i	77+42.91	13.96	363.10	363.11
℄ Pier	77+51.98	13.96	363.00	363.00
j	77+61.98	13.96	362.88	362.89
k	77+71.98	13.96	362.76	362.79
l	77+81.98	13.96	362.63	362.69
m	77+91.98	13.96	362.49	362.58
n	78+01.98	13.96	362.34	362.45
o	78+11.98	13.96	362.18	362.30
p	78+21.98	13.96	362.02	362.12
q	78+31.98	13.96	361.85	361.92
r	78+41.98	13.96	361.67	361.69
℄ Brg. E. Abut.	78+46.47	13.96	361.59	361.59
E. End of Slab	78+47.15	13.96	361.57	361.57

WEST APPROACH SLAB

NORTH EDGE OF SHOULDER

Location	Station	Offset	Theoretical Grade Elevations
W. End of W. Appr.	76+18.75	-15.00	363.77
A1	76+28.75	-15.00	363.75
A2	76+38.75	-15.00	363.74
E. End of W. Appr.	76+48.75	-15.00	363.71

NORTH EDGE OF ROADWAY

Location	Station	Offset	Theoretical Grade Elevations
W. End of W. Appr.	76+19.23	-11.00	363.84
A1	76+29.23	-11.00	363.83
A2	76+39.23	-11.00	363.81
E. End of W. Appr.	76+49.23	-11.00	363.79

℄ ROADWAY, P.G. & STAGE CONSTRUCTION LINE

Location	Station	Offset	Theoretical Grade Elevations
W. End of W. Appr.	76+20.56	0.00	364.01
A1	76+30.56	0.00	364.00
A2	76+40.56	0.00	363.98
E. End of W. Appr.	76+50.56	0.00	363.95

SOUTH EDGE OF ROADWAY

Location	Station	Offset	Theoretical Grade Elevations
W. End of W. Appr.	76+21.89	11.00	363.84
A1	76+31.89	11.00	363.83
A2	76+41.89	11.00	363.81
E. End of W. Appr.	76+51.89	11.00	363.78

SOUTH EDGE OF SHOULDER

Location	Station	Offset	Theoretical Grade Elevations
W. End of W. Appr.	76+22.37	15.00	363.76
A1	76+32.37	15.00	363.75
A2	76+42.37	15.00	363.73
E. End of W. Appr.	76+52.37	15.00	363.70

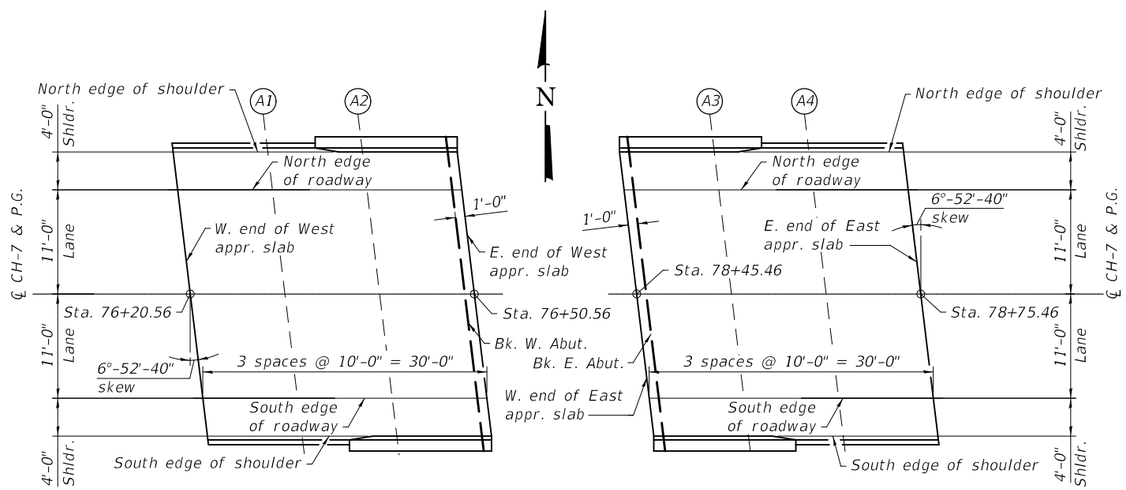

W. APPROACH SLAB

E. APPROACH SLAB

PLAN

EAST APPROACH SLAB

NORTH EDGE OF SHOULDER

Location	Station	Offset	Theoretical Grade Elevations
W. End of E. Appr.	78+43.65	-15.00	361.62
A3	78+53.65	-15.00	361.43
A4	78+63.65	-15.00	361.23
E. End of E. Appr.	78+73.65	-15.00	361.03

NORTH EDGE OF ROADWAY

Location	Station	Offset	Theoretical Grade Elevations
W. End of E. Appr.	78+44.13	-11.00	361.69
A3	78+54.13	-11.00	361.50
A4	78+64.13	-11.00	361.30
E. End of E. Appr.	78+74.13	-11.00	361.10

℄ ROADWAY, P.G. & STAGE CONSTRUCTION LINE

Location	Station	Offset	Theoretical Grade Elevations
W. End of E. Appr.	78+45.46	0.00	361.83
A3	78+55.46	0.00	361.64
A4	78+65.46	0.00	361.44
E. End of E. Appr.	78+75.46	0.00	361.24

SOUTH EDGE OF ROADWAY

Location	Station	Offset	Theoretical Grade Elevations
W. End of E. Appr.	78+46.79	11.00	361.64
A3	78+56.79	11.00	361.45
A4	78+66.79	11.00	361.25
E. End of E. Appr.	78+76.79	11.00	361.04

SOUTH EDGE OF SHOULDER

Location	Station	Offset	Theoretical Grade Elevations
W. End of E. Appr.	78+47.27	15.00	361.55
A3	78+57.27	15.00	361.36
A4	78+67.27	15.00	361.16
E. End of E. Appr.	78+77.27	15.00	360.95

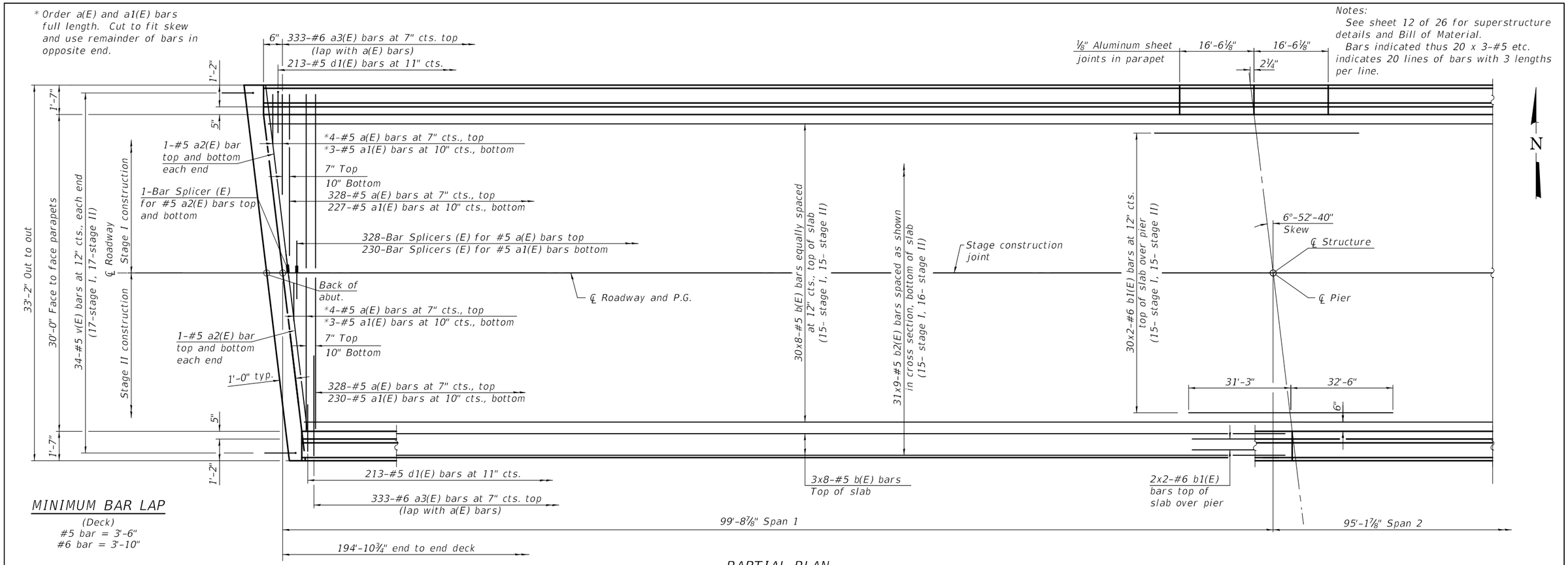

MINIMUM BAR LAP

(Deck)
#5 bar = 3'-6"
#6 bar = 3'-10"

PARTIAL PLAN

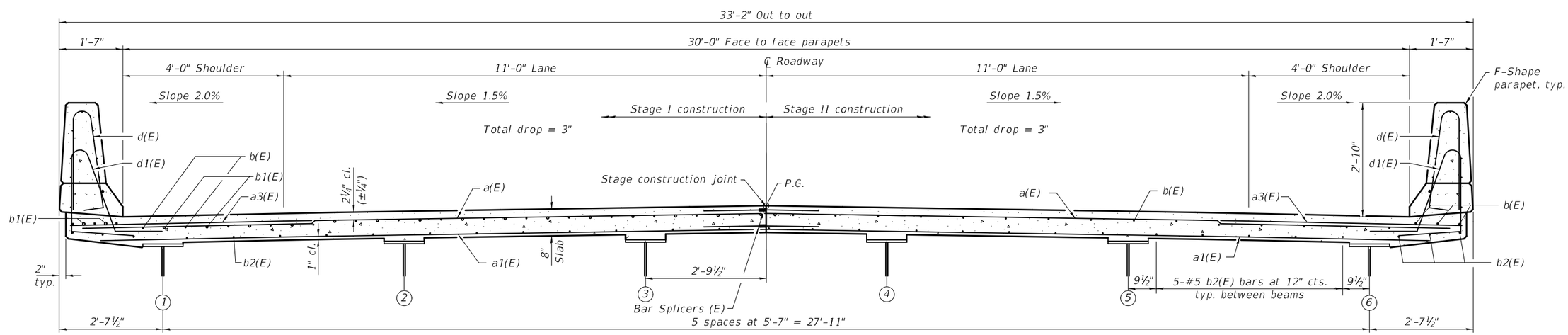

NEAR PIER

NEAR MIDSPAN

CROSS SECTION

(Looking East)

Notes:
See sheet 12 of 26 for superstructure details and Bill of Material.
Bars indicated thus 20 x 3-#5 etc. indicates 20 lines of bars with 3 lengths per line.

PRINT DRIVER = HP_TDRV5#
PEN TABLE = PENTBL5#
SCALE = 1.0000
FILE NAME = D770041-78454-11-Spr.dgn

ESCA CONSULTANTS, INC.

USER NAME = kjk	DESIGNED - RTM	05/18	REVISED -	STATE OF ILLINOIS DEPARTMENT OF TRANSPORTATION	SUPERSTRUCTURE STRUCTURE NO. 077-0041
ESCA PROJECT NO. 1259.09	CHECKED - KJA/ELH	05/18	REVISED -		
PLOT SCALE = 0:2 ':" / in.	DRAWN - KAH/JMK	08/18	REVISED -		
PLOT DATE = 12/11/2018 7:58:42 AM	CHECKED - KJA	11/18	REVISED -		SHEET NO. 11 OF 26 SHEETS

F.A.I. RTE.	SECTION	COUNTY	TOTAL SHEETS	SHEET NO.
57	(77-1-3)HB-2	PULASKI	92	57
		CONTRACT NO. 78454		
		ILLINOIS	FED. AID PROJECT	

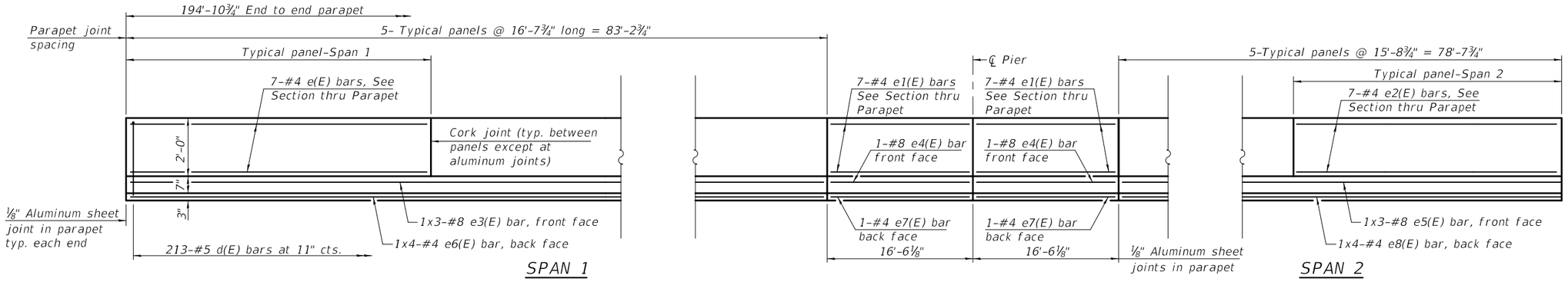

INSIDE ELEVATION OF PARAPET

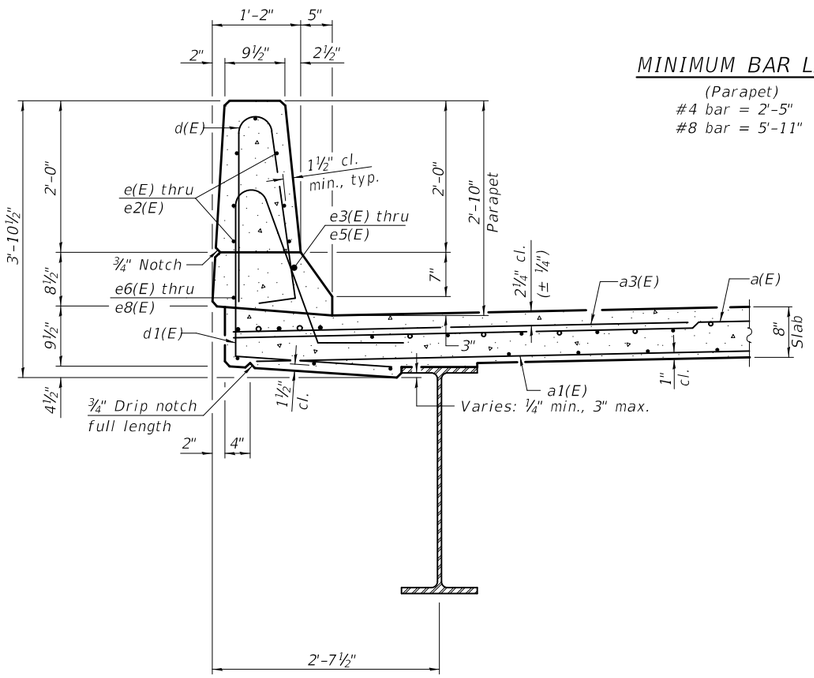

MINIMUM BAR LAP

(Parapet)
#4 bar = 2'-5"
#8 bar = 5'-11"

SECTION THRU PARAPET

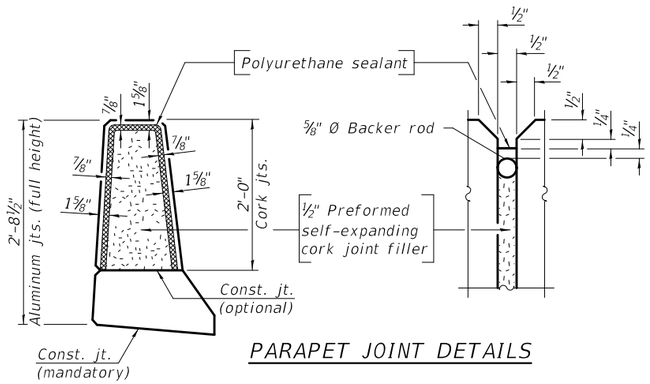

PARAPET JOINT DETAILS

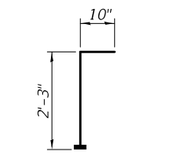

BAR v(E)
(Headed)

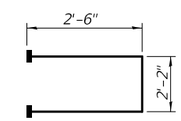

BAR s(E)
(Headed)

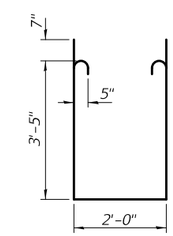

BAR s1(E)

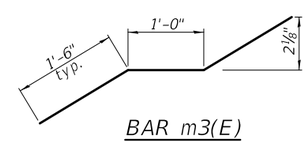

BAR m3(E)

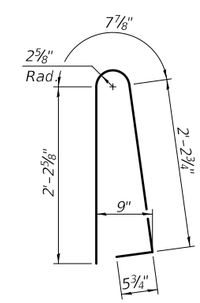

BAR d(E)

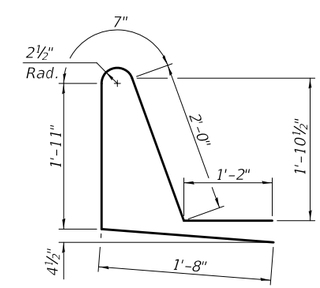

BAR d1(E)

SUPERSTRUCTURE BILL OF MATERIAL

Bar	No.	Size	Length	Shape
a(E)	664	#5	16'-3"	
a1(E)	463	#5	16'-0"	
a2(E)	8	#5	16'-4"	
a3(E)	666	#6	6'-6"	
b(E)	288	#5	27'-5"	
b1(E)	68	#6	34'-0"	
b2(E)	279	#5	24'-9"	
d(E)	426	#5	5'-7"	
d1(E)	426	#5	7'-4"	
e(E)	70	#4	16'-3"	
e1(E)	28	#4	16'-2"	
e2(E)	70	#4	15'-3"	
e3(E)	6	#8	31'-8"	
e4(E)	4	#8	16'-2"	
e5(E)	6	#8	30'-0"	
e6(E)	8	#4	22'-6"	
e7(E)	4	#4	16'-2"	
e8(E)	8	#4	21'-4"	
m(E)	20	#6	16'-3"	
m1(E)	32	#6	5'-3"	
m2(E)	32	#6	2'-3"	
m3(E)	36	#5	4'-0"	
s(E)	31	#5	7'-2"	
s1(E)	31	#5	10'-0"	
v(E)	68	#5	3'-1"	
Reinforcement Bars, Epoxy Coated			Lbs.	55260
Concrete Superstructure			Cu. Yds.	245.0
Bar Splicers			Each	572

Bars indicated thus 1 x 2-#8 etc. indicates 1 line of bars with 2 lengths per line.

Notes:

The ⅛" Aluminum sheet shall be ASTM B 209 alloy 3003-H14 and coated to minimize reaction with wet concrete. Cost included with Concrete Superstructure.

The Polyurethane Sealant shall be according to Article 1050.04 of the Std. Spec. and the color shall be gray.

Headed bars shall conform to ASTM A970 with threaded attachment; Class HA; and reinforcement bars conforming to ASTM A706. Cost included with Reinforcement Bars, Epoxy Coated.

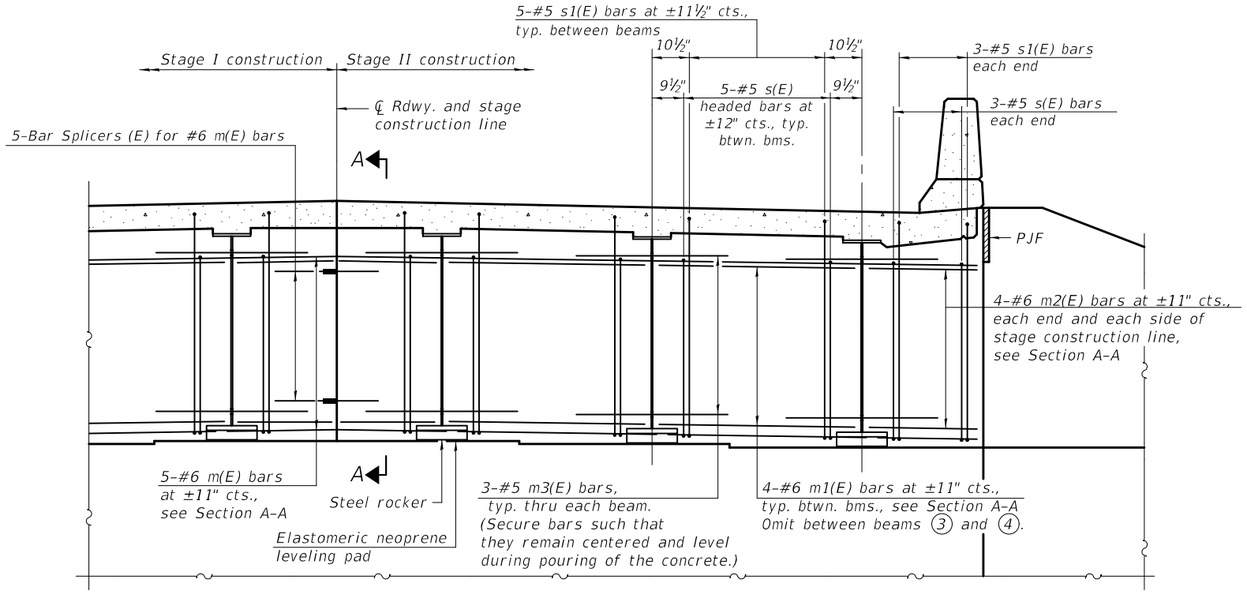

DIAPHRAGM AT ABUTMENT

(Looking East at East Abutment)

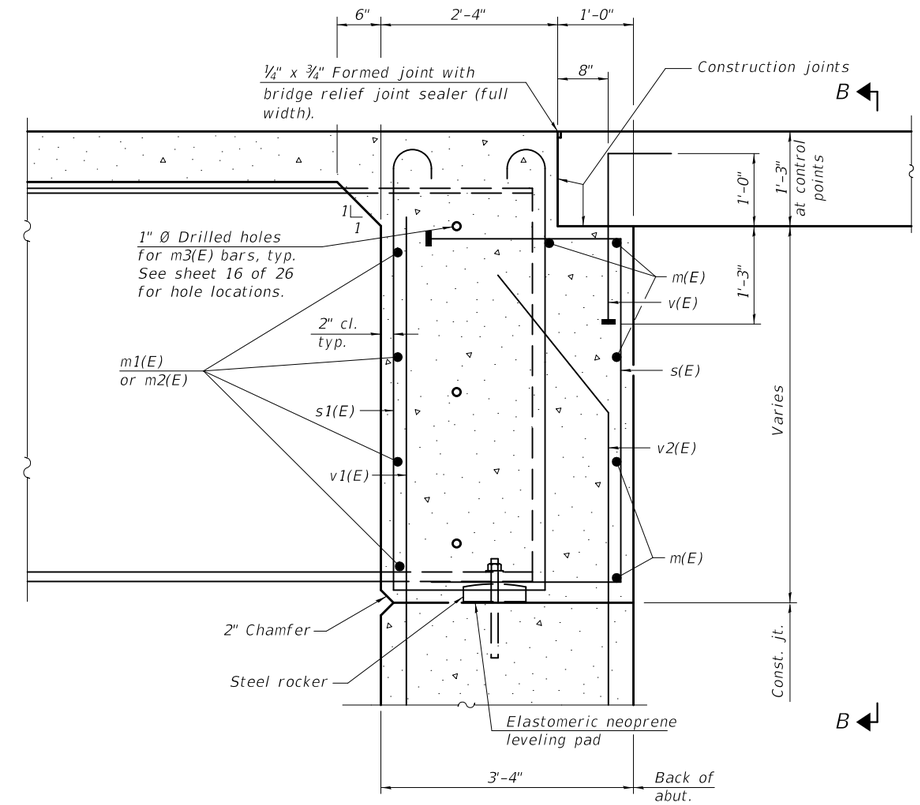

SECTION A-A

(at Rt. ∠'s)

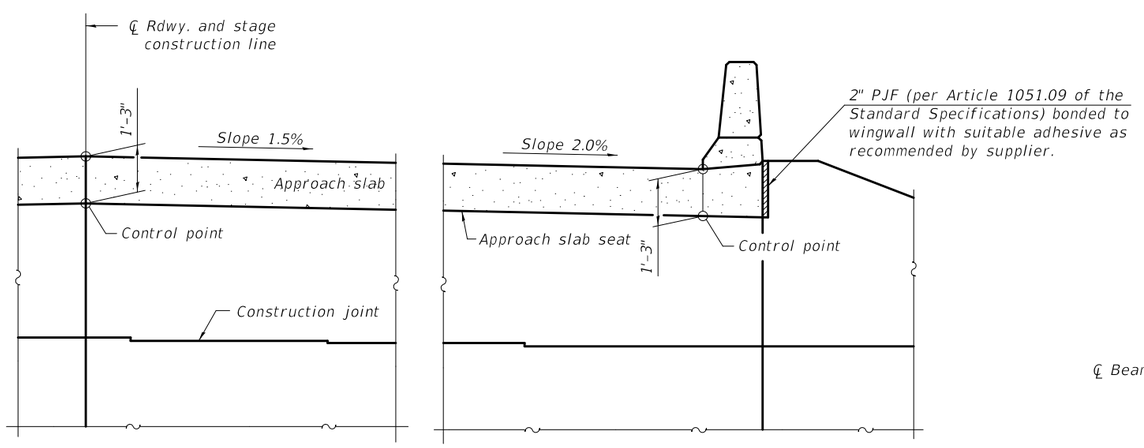

SECTION B-B

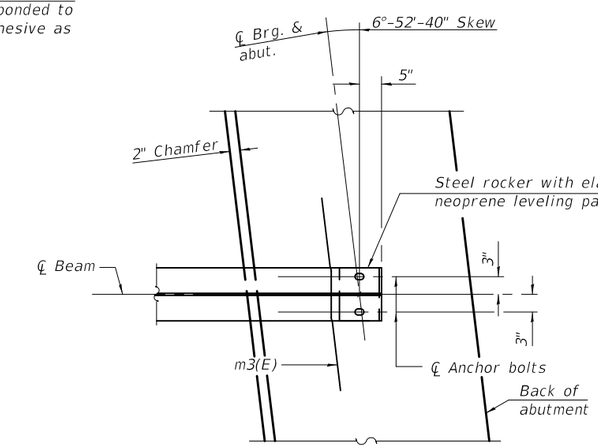

PLAN AT ABUTMENT

(Showing bottom flange of beam)

Notes:

Reinforcement bars in diaphragm are billed with superstructure on sheet 12 of 26.

Concrete in diaphragm is included with Concrete Superstructure on sheet 12 of 26.

For details of bars s(E), s1(E), and v(E), see sheet 12 of 26.

For details of bars v1(E) and v2(E), see sheet 19 and 20 of 26.

The s(E) and s1(E) bars shall be placed parallel to the beams. Spacing for these bars shall be at right angles to the beams.

The approach slab seat shall have a constant slope determined from the control points shown.

For bearing details see sheet 18 of 26.

Beams shall be braced for stability during erection and remain braced until deck is poured and cured.

PRINT DRIVER = $PLTDRV$$
PEN TABLE = $PENTBL$$
PLOT SCALE = $PLOTSC$$
PLOT NAME = $PLOTNM$$
FILE NAME = 077D041-78454-13-DiaphDtls.dgn

ESCA CONSULTANTS, INC. CIVIL & STRUCTURAL ENGINEERS

USER NAME = kjk	DESIGNED -	RTM	05/18	REVISED -	STATE OF ILLINOIS DEPARTMENT OF TRANSPORTATION	DIAPHRAGM DETAILS STRUCTURE NO. 077-0041	
ESCA PROJECT NO. 1259.09	CHECKED -	KJA/ELH	05/18	REVISED -			
PLOT SCALE = 0:2 ':' / in.	DRAWN -	KAH/JMK	08/18	REVISED -			
PLOT DATE = 12/11/2018 7:58:44 AM	CHECKED -	RTM	11/18	REVISED -		SHEET NO. 13 OF 26 SHEETS	

F.A.I. RTE.	SECTION	COUNTY	TOTAL SHEETS	SHEET NO.
57	(77-1-3)HB-2	PULASKI	92	59
		CONTRACT NO. 78454		
		ILLINOIS FED. AID PROJECT		

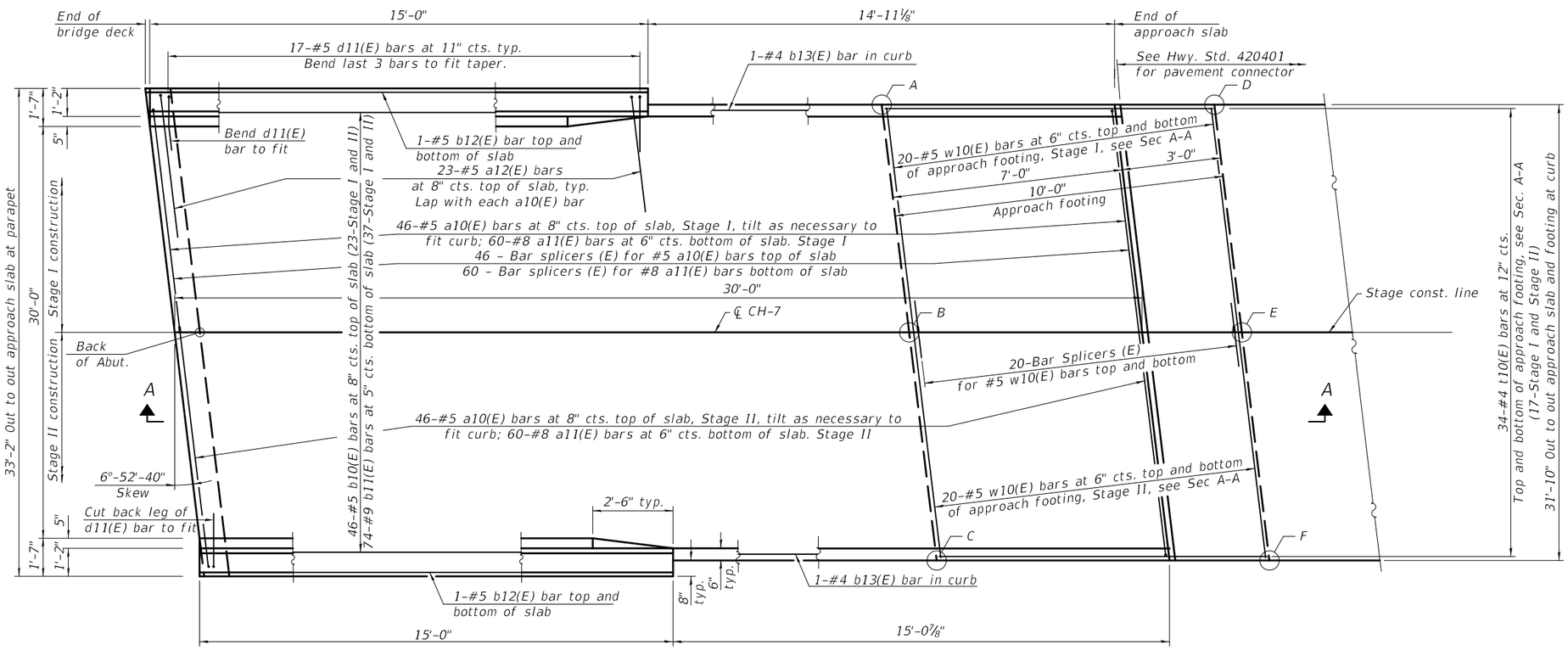

PLAN

(Showing East Approach - West Approach similar)

TOP AND BOTTOM ELEVATIONS FOR APPROACH FOOTING

	West Approach		East Approach	
Point	Top	Bottom	Top	Bottom
A	362.49	361.66	359.91	359.07
B	362.75	361.92	360.13	359.30
C	362.49	361.66	359.83	358.99
D	362.50	361.67	359.71	358.88
E	362.76	361.93	359.92	359.09
F	362.50	361.67	359.62	358.78

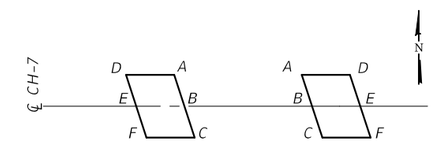

PLAN

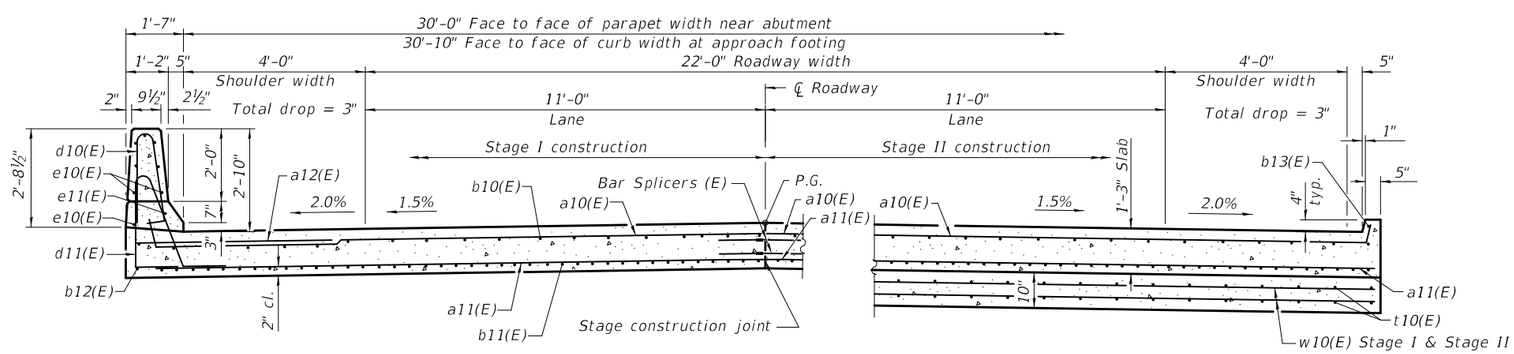

NEAR ABUTMENT

CROSS SECTION

(Looking East)

AT APPROACH FOOTING

(Sheet 1 of 2)

PRINT DRIVER = ML TDRVR$
PEN TABLE = BRIDGE.TBL$
SCALE = 1.000000
FILE NAME = D:\78041-78454-14-Sp-Dtls.dgn

ESCA CONSULTANTS, INC.
TRAFFIC & TRANSPORTATION ENGINEERS

USER NAME = kjk	DESIGNED - RTM	05/18	REVISED -		
ESCA PROJECT NO. 1259.09	CHECKED - KJA/ELH	05/18	REVISED -		
PLOT SCALE = 0:2 ':" / in.	DRAWN - KAH/JMK	08/18	REVISED -		
PLOT DATE = 12/11/2018 7:58:45 AM	CHECKED - KJA	11/18	REVISED -		

STATE OF ILLINOIS
DEPARTMENT OF TRANSPORTATION

BRIDGE APPROACH SLAB DETAILS
STRUCTURE NO. 077-0041

SHEET NO. 14 OF 26 SHEETS

F.A.I. RTE.	SECTION	COUNTY	TOTAL SHEETS	SHEET NO.
57	(77-1-3)HB-2	PULASKI	92	60
		CONTRACT NO. 78454		
	ILLINOIS	FED. AID PROJECT		

Notes:

The joint opening shall be adjusted for temperature per Article 520.04 of the Standard Specifications. However, since this detail is for jointless structures, the length of bridge used to calculate the adjustment shall be equal to half the total bridge length plus the length of the bridge approach slab.

Parapet concrete shall be paid for as Concrete Superstructure.

Approach slab shall be paid for as Concrete Superstructure (Approach Slab).

Approach footing concrete shall be paid for as Concrete Structures.

The approach footing maximum applied service bearing pressure (Qmax) = 2.0 ksf.

Cost of excavation for approach footing included with Concrete Structures.

For Granular Backfill for Structures and drainage treatment details, see sheet 2 of 26.

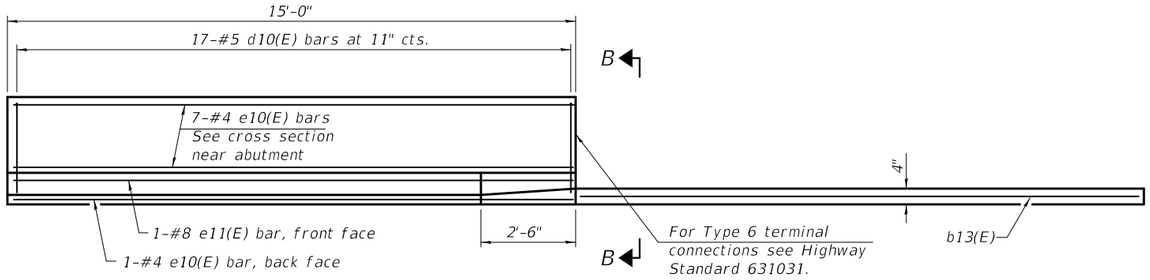

INSIDE ELEVATION OF PARAPET AND CURB

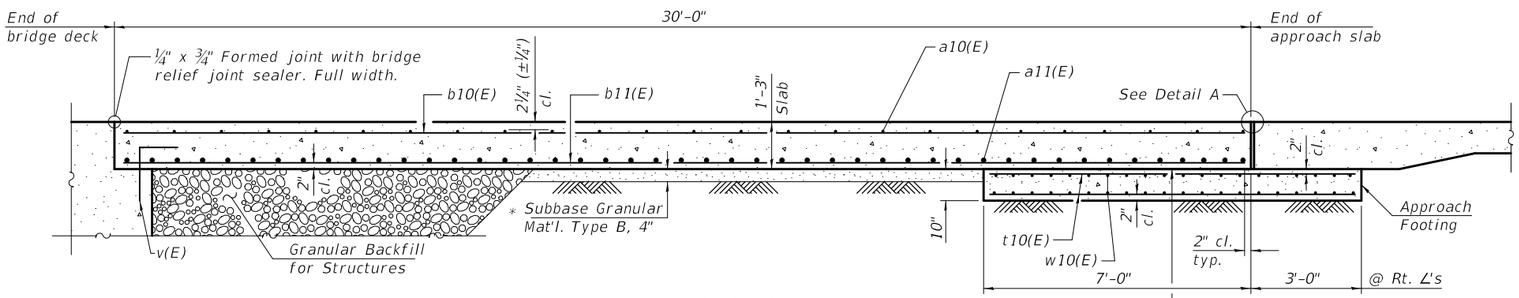

SECTION A-A

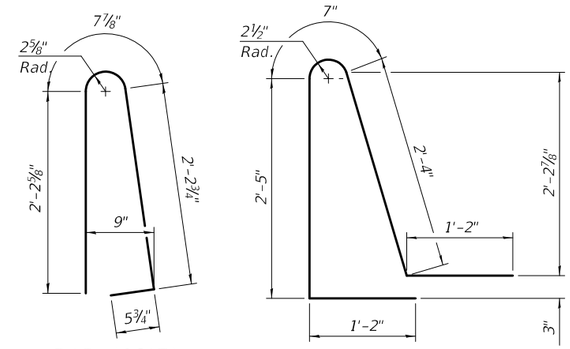

BAR d10(E)

BAR d11(E)

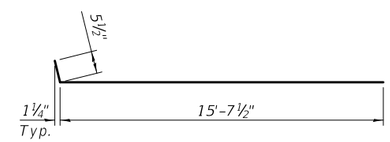

BAR a10(E)

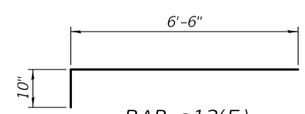

BAR a12(E)

TWO APPROACHES
BILL OF MATERIAL

Bar	No.	Size	Length	Shape
a10(E)	184	#5	16'-1"	
a11(E)	240	#8	15'-8"	
a12(E)	92	#5	7'-4'	
b10(E)	92	#5	29'-8"	
b11(E)	148	#9	29'-8"	
b12(E)	8	#5	14'-8"	
b13(E)	4	#4	14'-8"	
d10(E)	68	#5	5'-7"	
d11(E)	68	#5	7'-8"	
e10(E)	32	#4	14'-8"	
e11(E)	4	#8	14'-8"	
t10(E)	136	#4	9'-8"	
w10(E)	160	#5	15'-8"	
Concrete Superstructure			Cu. Yd.	6.7
Concrete Superstructure (Approach Slab)			Cu. Yd.	90.9
Concrete Structures			Cu. Yd.	19.8
Reinforcement Bars, Epoxy Coated			Pound	36670
Bar Splicers			Each	292

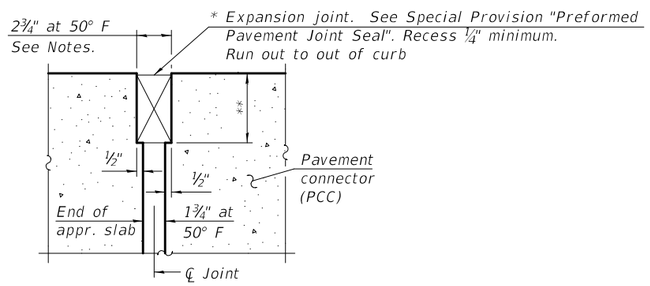

DETAIL A
(@ Rt. ∠'s)

* Cost included with Concrete Superstructure (Approach Slab).

** Per manufacturer recommendations

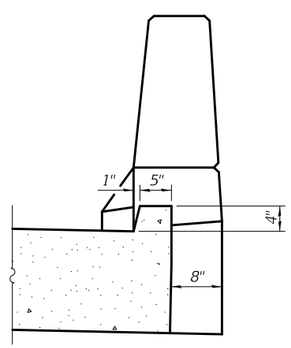

VIEW B-B

(Sheet 2 of 2)

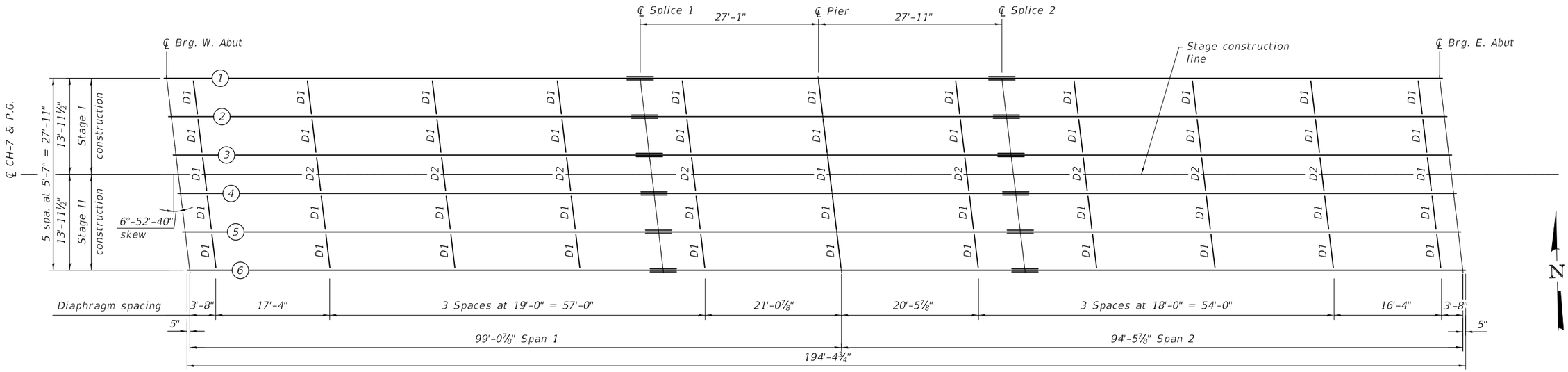

PLAN

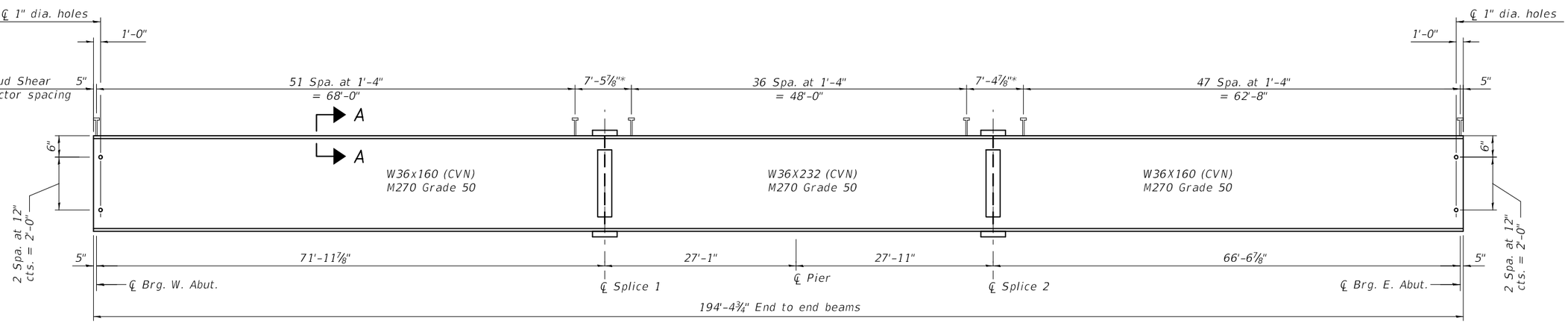

BEAM ELEVATION

* Omit shear connectors over splices

Notes:
See sheet 17 of 26 for additional steel details.
All diaphragms shall be installed as steel is erected and secured with erection pins and bolts except as otherwise noted. Individual diaphragms at supports may be temporarily disconnected to install bearing anchor rods.
Load carrying components designated (CVN) denotes Charpy-V-Notch impact energy requirements, Zone 2.

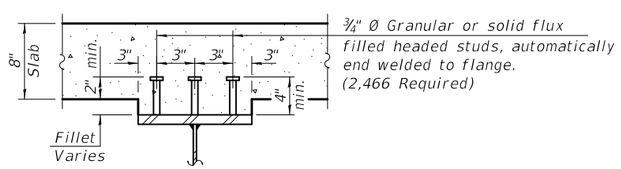

SECTION A-A

TOP OF BEAM ELEVATIONS

(For fabrication only)

Beam	℄ Brg. W. Abut.	℄ Splice 1 W36x160	℄ Splice 1 W36x232	℄ Pier	℄ Splice 2 W36x232	℄ Splice 2 W36x160	℄ Brg. E. Abut.
1	363.01	362.59	362.64	362.31	361.98	361.93	360.93
2	363.10	362.68	362.73	362.41	362.08	362.03	361.01
3	363.18	362.76	362.81	362.48	362.15	362.10	361.08
4	363.18	362.76	362.81	362.48	362.14	362.09	361.07
5	363.09	362.66	362.71	362.38	362.05	362.00	360.97
6	363.00	362.56	362.61	362.28	361.94	361.89	360.87

Notes:
Elevations shown do not include deflection and are intended only for use in fabrication of steel beams.
Elevations at splice locations are top of flange (not splice plate).

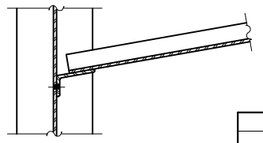

SECTION A-A

GIRDER REACTION TABLE		West Abut.		Pier		East Abut.	
		Interior	Exterior	Interior	Exterior	Interior	Exterior
LLDF		0.64	0.57	0.64	0.57	0.64	0.57
OCF		1.02	1.02	-	-	1.02	1.02
RDC1	(k)	27.6	27.6	100.9	100.8	25.5	25.5
RDC2	(k)	5.4	5.4	18.7	18.7	5.0	5.0
RDW	(k)	10.1	10.1	34.8	34.8	9.3	9.3
R^{L}	(k)	59.2	52.3	113.9	100.7	58.4	51.6
R_{IM}	(k)	13.8	12.2	22.5	19.9	13.7	12.1
R_{Total}	(k)	116.1	107.6	290.8	274.9	111.9	103.5

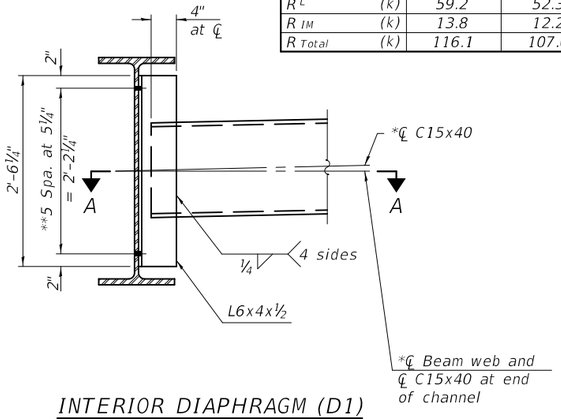

INTERIOR DIAPHRAGM (D1)

(47 Required)

Notes:

Two hardened washers required for each set of oversized holes.

*Alternate channels C15x50 are permitted to facilitate material acquisition. Calculated weight of structural steel is based on the lighter section. The alternate, if utilized, shall be provided at no additional cost to the Department.

**¾" HS bolts, 15/16" holes

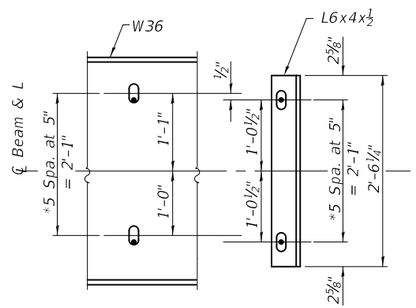

SECTION B-B

(Showing Stage II Connection)

Notes:

Two hardened washers required for each set of oversized holes.

Bolts in slots shall be finger tight until the second stage pour is complete. Fully tighten after Stage II deck pour is complete.

*¾" HS bolts, 15/16" holes Stage I connection, 13/16"x1⅞" slotted holes Stage II connection. Position slots as shown with no concrete load present.

INTERIOR GIRDER MOMENT TABLE		0.4 Sp. 1	Pier	0.6 Sp. 2
Is	(in^4)	9,760	15,000	9,760
Ic(n)	(in^4)	24,101	33,280	24,101
Ic(3n)	(in^4)	17,543	24,051	17,543
Ic(cr)	(in^4)	-	17,894	-
Ss	(in^3)	542	809	542
Sc(n)	(in^3)	772	1,100	772
Sc(3n)	(in^3)	695	992	695
Sc(cr)	(in^3)	-	877	-
DC1	(k/')	0.743	0.815	0.743
MDC1	('k)	494.3	1058.0	415.6
DC2	(k/')	0.150	0.150	0.150
MDC2	('k)	96.4	200.6	80.5
DW	(k/')	0.280	0.280	0.280
MDW	('k)	180.0	374.5	150.2
LLDF		0.492	0.494	0.496
M^{LL+IM}	('k)	1053.4	1129.3	1009.4
Mu (Strength I)	('k)	2,852.0	4,111.0	2,612.0
Øf Mn	('k)	3,779.0	4,502.0	3,779.0
fs DC1	(ksi)	10.94	15.69	9.20
fs DC2	(ksi)	1.66	2.74	1.39
fs DW	(ksi)	3.11	5.12	2.59
fs (LL+IM)	(ksi)	16.37	15.45	15.69
fs (Service II)	(ksi)	37.00	43.64	33.58
0.95Rh Fyf	(ksi)	47.50	47.50	47.50
fs (Total)(Strength I)	(ksi)	-	-	-
Øf Fn	(ksi)	-	-	-
Vf	(k)	178.3	275.8	164.5

Is, Ss: Non-composite moment of inertia and section modulus of the steel section used for computing fs(Total-Strength I, and Service II) due to non-composite dead loads ($in.^4$ and $in.^3$).

Ic(n), Sc(n): Composite moment of inertia and section modulus of the steel and deck based upon the modular ratio, "n", used for computing fs(Total-Strength I, and Service II) in uncracked sections due to short-term composite live loads ($in.^4$ and $in.^3$).

Ic(3n), Sc(3n): Composite moment of inertia and section modulus of the steel and deck based upon 3 times the modular ratio, "3n", used for computing fs(Total-Strength I, and Service II) in uncracked sections, due to long-term composite (superimposed) dead loads ($in.^4$ and $in.^3$).

Ic(cr), Sc(cr): Composite moment of inertia and section modulus of the steel and longitudinal deck reinforcement, used for computing fs (Total-Strength I and Service II) in cracked sections, due to both short-term composite live loads and long-term composite (superimposed) dead loads ($in.^4$ and $in.^3$).

DC1: Un-factored non-composite dead load (kips/ft.).

MDC1: Un-factored moment due to non-composite dead load (kip-ft.).

DC2: Un-factored long-term composite (superimposed excluding future wearing surface) dead load (kips/ft.).

MDC2: Un-factored moment due to long-term composite (superimposed excluding future wearing surface) dead load (kip-ft.).

DW: Un-factored long-term composite (superimposed future wearing surface only) dead load (kips/ft.).

MDW: Un-factored moment due to long-term composite (superimposed future wearing surface only) dead load (kip-ft.).

M^{LL+IM}: Un-factored live load moment plus dynamic load allowance (impact) (kip-ft.).

Mu (Strength I): Factored design moment (kip-ft.).
1.25 (MDC1 + MDC2) + 1.5 MDW + 1.75 M^{LL+IM}

Øf Mn: Compact composite positive moment capacity computed according to Article 6.10.7.1 or non-slender negative moment capacity according to Article A6.1.1 or A6.1.2 (kip-ft).

fs DC1: Un-factored stress at edge of flange for controlling steel flange due to vertical non-composite dead loads as calculated below (ksi).
MDC1/ Snc

fs DC2: Un-factored stress at edge of flange for controlling steel flange due to vertical composite dead loads as calculated below (ksi).
MDC2/ Sc(3n) or MDC2/ Sc(cr) as applicable.

fs DW: Un-factored stress at edge of flange for controlling steel flange due to vertical composite future wearing surface loads as calculated below (ksi).
MDW/ Sc(3n) or MDW/ Sc(cr) as applicable.

fs (LL+IM): Un-factored stress at edge of flange for controlling steel flange due to vertical composite live load plus impact loads as calculated below (ksi).
M^{LL+IM} / Sc(n) or M^{LL+IM} / Sc(cr) as applicable.

fs (Service II): Sum of stresses as computed below (ksi).
fsDC1 + fsDC2 + fsDW + 1.3 fs(LL+IM)

0.95RhFyf: Composite stress capacity for Service II loading according to Article 6.10.4.2 (ksi).

fs (Total)(Strength I): Sum of stresses as computed below on non-compact section (ksi).
1.25 (fsDC1 + fsDC2) + 1.5 fsDW + 1.75 fs(LL+IM)

Øf Fn: Non-Compact composite positive or negative stress capacity for Strength I loading according to Article 6.10.7 or 6.10.8 (ksi).

Vf: Maximum factored shear range in span computed according to Article 6.10.10.

LLDF: Live Load Distribution factor computed according to Table 4.6.2.2.2b-1 and Table 4.6.2.2.2d-1.

OCF: Obtuse correction factor computed according to Table 4.6.2.2.3c-1 or as simplified in Section 3.3.1 of the Bridge Manual.

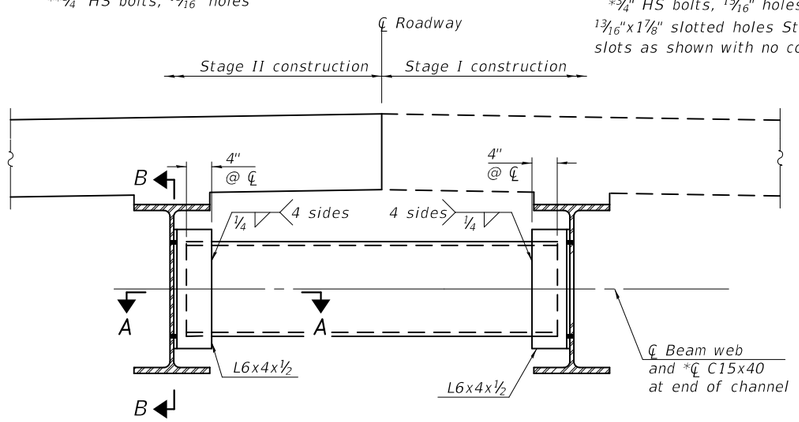

INTERIOR DIAPHRAGM - D2

(8 Required)

Note:

*Alternate channels C15X50 are permitted to facilitate material acquisition. Calculated weight of structural steel is based on the lighter section. The alternate, if utilized, shall be provided at no additional cost to the Department.

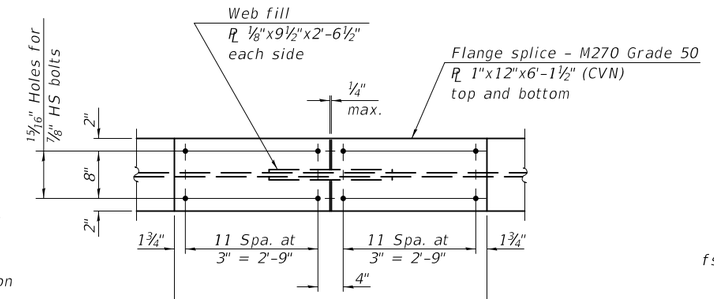

PLAN

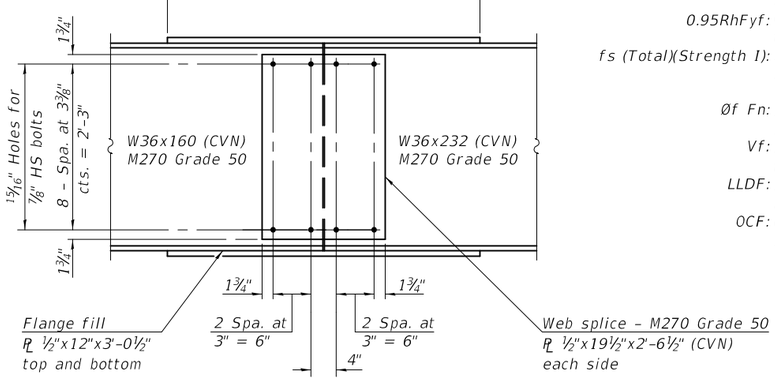

ELEVATION

SPLICE DETAIL

(12 Required)

PRINT ORDER = #PLTORIG$
PEN TABLE = #BTUTBL$$
PLOT SCALE = #BTUSCL$$
FILE NAME = 077B041-78454-17-SUP-001L.dgn

ESCA CONSULTANTS, INC.	USER NAME = kjk	DESIGNED - RTM 05/18	REVISED -	STATE OF ILLINOIS DEPARTMENT OF TRANSPORTATION	FRAMING DETAILS STRUCTURE NO. 077-0041	F.A.I. RTE.	SECTION	COUNTY	TOTAL SHEETS	SHEET NO.
	ESCA PROJECT NO. 1259.09	CHECKED - KJA/ELH 05/18	REVISED -			57	(77-1-3)HB-2	PULASKI	92	63
	PLOT SCALE = 0:2 ':" / in.	DRAWN - KAH/JMK 08/18	REVISED -					CONTRACT NO. 78454		
	PLOT DATE = 12/11/2018 7:58:48 AM	CHECKED - RTM 11/18	REVISED -		SHEET NO. 17 OF 26 SHEETS		ILLINOIS	FED. AID PROJECT		

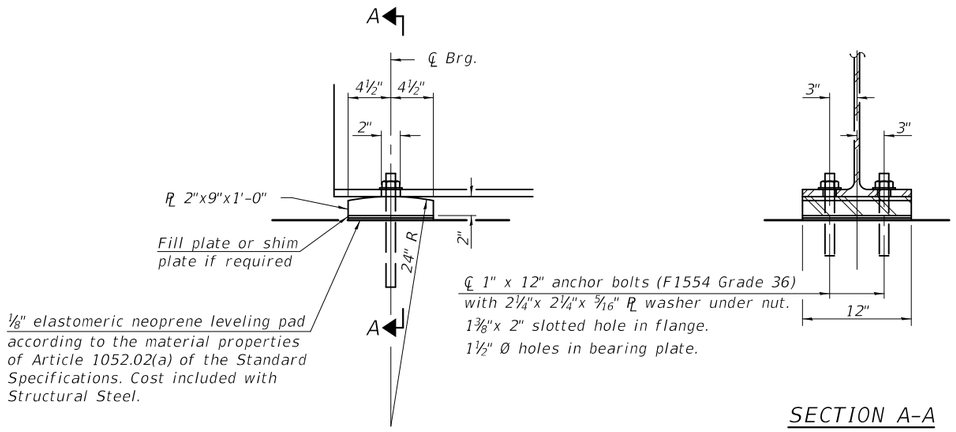

SECTION A-A

ELEVATION AT ABUTMENT

FIXED BEARING AT ABUTMENT

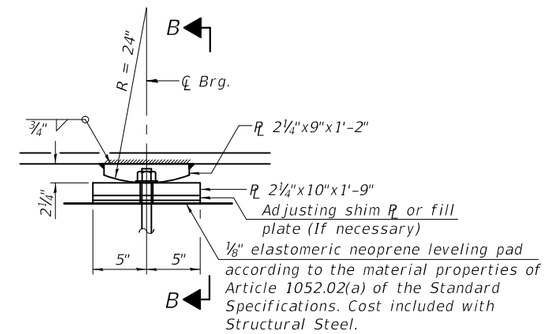

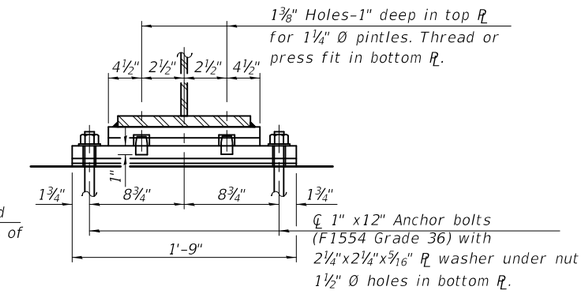

ELEVATION AT PIER

SECTION B-B

FIXED BEARING AT PIER

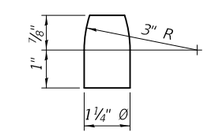

PINTLE

BEARING FILL PLATES

Location		Thickness
East Abutment	Beam 3	⅛"

Notes:

Anchor bolts shall be ASTM F1554 all-thread (or an Engineer-approved alternate material) of the grade(s) and diameter(s) specified. The corresponding specified grade of AASHTO M314 anchor bolts may be used in lieu of ASTM F1554.

Anchor bolts shall be according to Article 521.06 of the Standard Specifications.

Beams shall be braced for stability during erection and remain braced until deck is poured and cured.

Anchor bolts at all supports shall be installed as each member is erected unless an equivalent temporary means of lateral restraint is used.

Fill plates are required at the locations shown in the table on this sheet and shall be placed as shown on bearing details.

Two ⅛ in. adjusting shims shall be provided for each bearing in addition to all other plates or shims and placed as shown on bearing details.

The anchor bolt sizes and grades shown in the Fixed Bearing at Pier detail constitute a calculated seismic structural fuse. Substitution of higher diameter and/or grade anchor bolts will not be allowed.

BILL OF MATERIAL

Item	Unit	Total
Anchor Bolts, 1"	Each	36

PRINT DRIVER = $PL_TDRV$$
PEN TABLE = $PENTBL$$
PLOT SCALE = $PLOTSC$$
FILE NAME = 077B041-78454-18-B-gdhb.dgn

ESCA CONSULTANTS, INC.
CIVIL & STRUCTURAL ENGINEERS

USER NAME = kjk	DESIGNED - KJA	05/18	REVISED -	STATE OF ILLINOIS DEPARTMENT OF TRANSPORTATION	BEARING DETAILS STRUCTURE NO. 077-0041	F.A.I. RTE. 57	SECTION (77-1-3)HB-2
ESCA PROJECT NO. 1259.09	CHECKED - RTM/ELH	05/18	REVISED -			COUNTY PULASKI	TOTAL SHEETS 92 / SHEET NO. 64
PLOT SCALE = 0:2 ':" / in.	DRAWN - KAH/JMK	08/18	REVISED -			CONTRACT NO. 78454	
PLOT DATE = 12/11/2018 7:58:49 AM	CHECKED - KJA	11/18	REVISED -		SHEET NO. 18 OF 26 SHEETS	ILLINOIS	FED. AID PROJECT

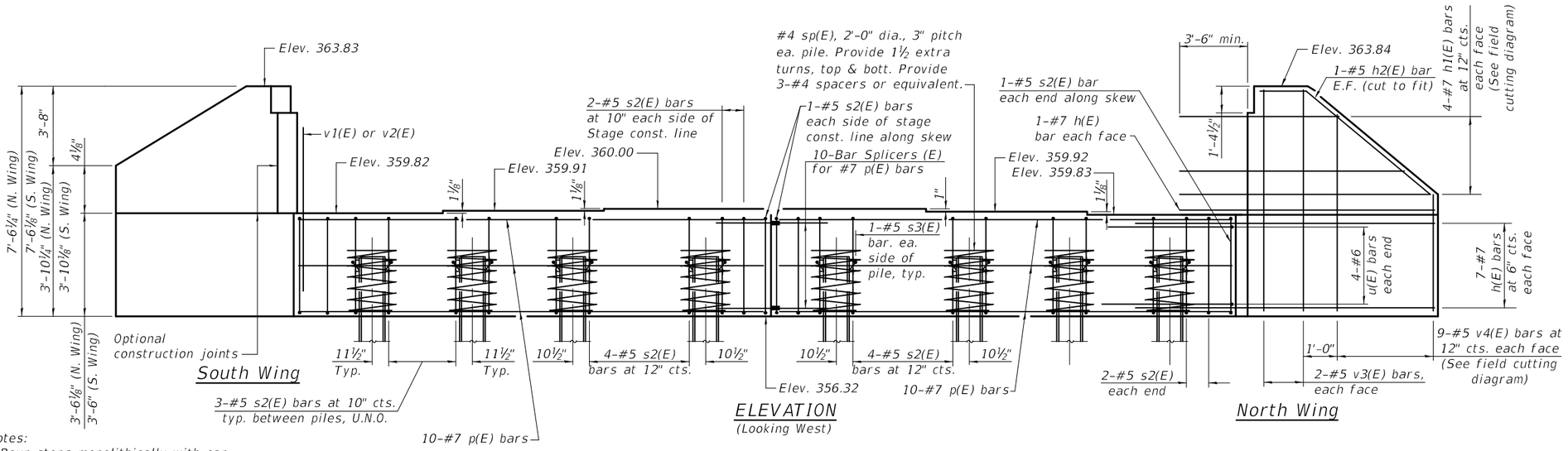

Notes:
Pour steps monolithically with cap.
For details of piles see sheet 22 of 26.
Space reinforcement in cap to miss anchor bolts.

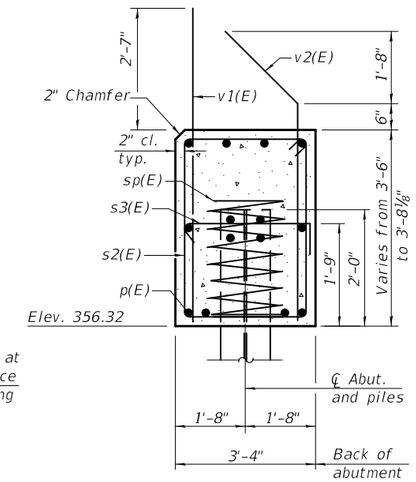

SEC. THRU ABUT.

Dimensions at right angles to abutment.

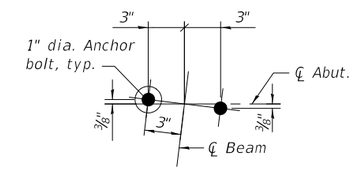

ANCHOR BOLT LAYOUT

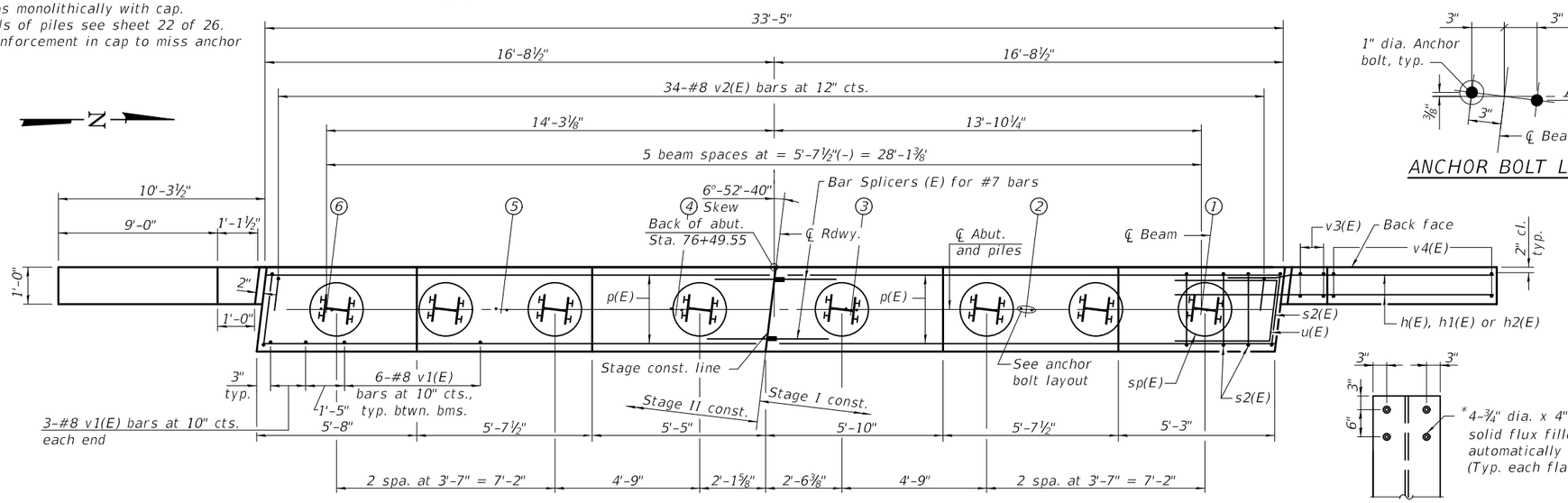

PLAN

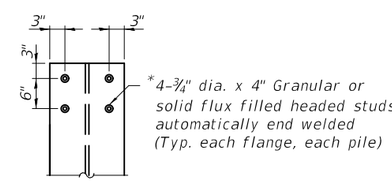

SHEAR STUD DETAIL

*Cost included with Furnishing Piles.

BILL OF MATERIAL

	Bar	No.	Size	Length	Shape
	h(E)	32	#7	13'-6"	
	h1(E)	8	#7	21'-7"	
	h2(E)	4	#5	10'-4"	
	p(E)	20	#7	16'-4"	
	s2(E)	32	#5	13'-3"	
	s3(E)	16	#5	4'-0"	
**	sp(E)	8	#4	2'-0"	
	u(E)	8	#6	10'-7"	
	v1(E)	36	#8	5'-11"	
	v2(E)	34	#8	6'-2"	
	v3(E)	8	#5	7'-2"	
	v4(E)	18	#5	10'-6"	
	Structure Excavation			Cu. Yd.	75
	Concrete Structures			Cu. Yd.	19.3
	Reinforcement Bars, Epoxy Coated			Pound	4340
	Furnishing Steel Piles HP14x117			Foot	504
	Test Pile Steel HP14x117			Each	1
	Driving Piles			Foot	504
	Pile Shoes			Each	8
	Bar Splicers			Each	10

** Length is height of spiral.

PILE DATA

Type: HP14x117
Nominal Required Bearing: 929 kips
Factored Resistance Available: 511 kips
Est. Length: 72'
No. Production Piles: 7
No. Test Piles: 1

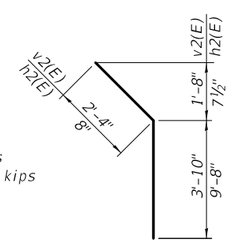

BARS v2(E) & h2(E)

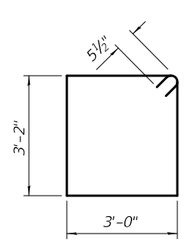

BAR s2(E)

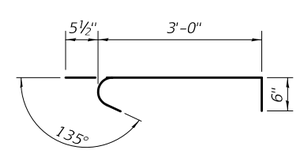

BAR s3(E)

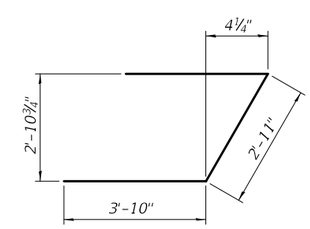

BAR u(E)

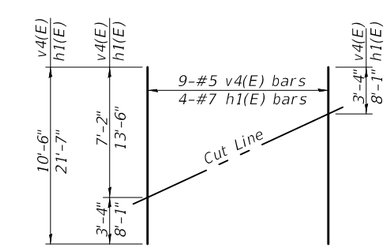

FIELD CUTTING DIAGRAM

Order v4(E) & h1(E) full length.
Cut as shown and use remainder of bars in opposite face.

PRINT DRIVER = ML TDRV53
PEN TABLE = BERTBLS4
SCALE = 1.0000
FILE NAME = D:\78841-78454-19-W4but.dgn

ESCA CONSULTANTS, INC.

USER NAME = kjk	DESIGNED - KJA	05/18	REVISED -		
ESCA PROJECT NO. 1259.09	CHECKED - RTM/ELH	05/18	REVISED -		
PLOT SCALE = 0:2 ':" / in.	DRAWN - KAH/JMK	08/18	REVISED -		
PLOT DATE = 12/11/2018 7:58:50 AM	CHECKED - KJA	11/18	REVISED -		

STATE OF ILLINOIS
DEPARTMENT OF TRANSPORTATION

WEST ABUTMENT
STRUCTURE NO. 077-0041

SHEET NO. 19 OF 26 SHEETS

F.A.I. RTE.	SECTION	COUNTY	TOTAL SHEETS	SHEET NO.
57	(77-1-3)HB-2	PULASKI	92	65

CONTRACT NO. 78454

ILLINOIS | FED. AID PROJECT

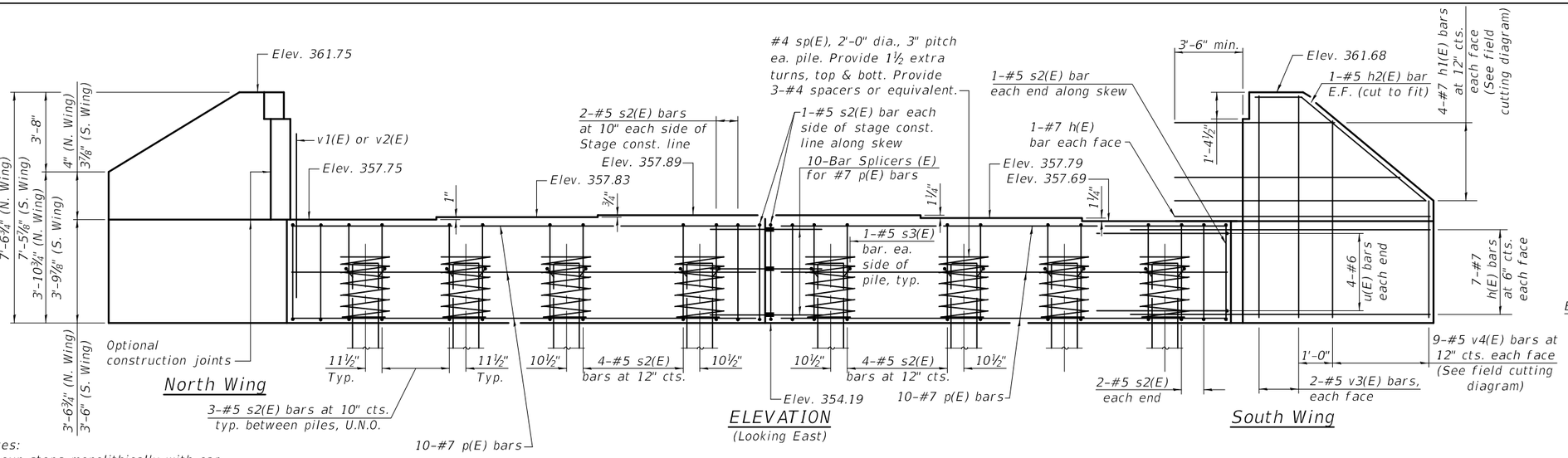

Notes:
Pour steps monolithically with cap.
For details of piles see sheet 22 of 26.
Space reinforcement in cap to miss anchor bolts.

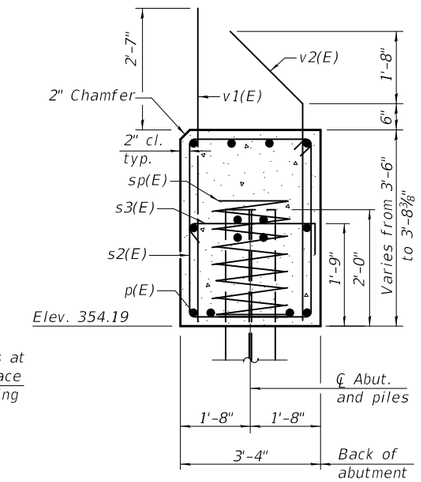

SEC. THRU ABUT.

Dimensions at right angles to abutment.

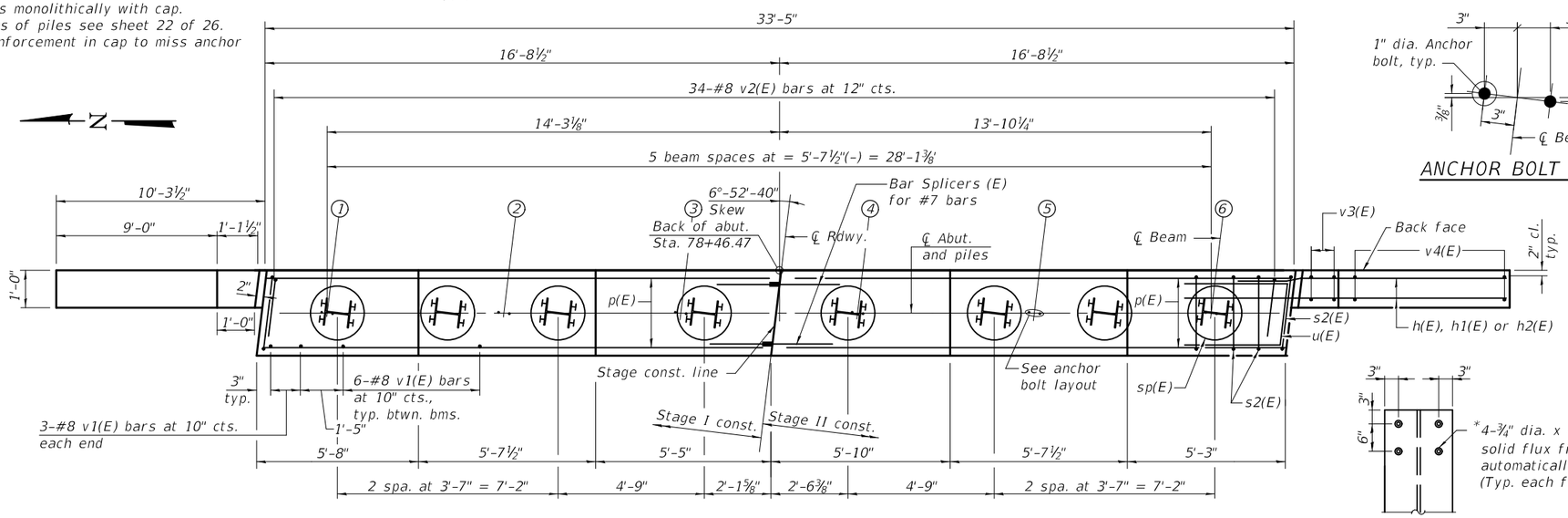

PLAN

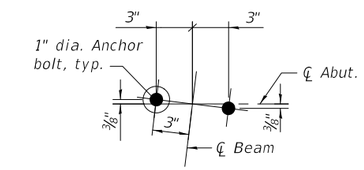

ANCHOR BOLT LAYOUT

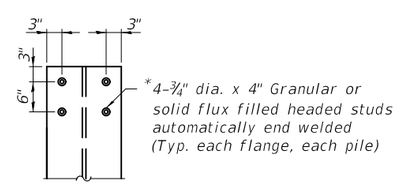

SHEAR STUD DETAIL

*Cost included with Furnishing Piles.

BILL OF MATERIAL

Bar	No.	Size	Length	Shape
h(E)	32	#7	13'-6"	
h1(E)	8	#7	21'-7"	
h2(E)	4	#5	10'-4"	
p(E)	20	#7	16'-4"	
s2(E)	32	#5	13'-3"	
s3(E)	16	#5	4'-0"	
** sp(E)	8	#4	2'-0"	
u(E)	8	#6	10'-7"	
v1(E)	36	#8	5'-11"	
v2(E)	34	#8	6'-2"	
v3(E)	8	#5	7'-2"	
v4(E)	18	#5	10'-6"	
Structure Excavation		Cu. Yd.	70	
Concrete Structures		Cu. Yd.	19.3	
Reinforcement Bars, Epoxy Coated		Pound	4340	
Furnishing Steel Piles HP14x117		Foot	707	
Test Pile Steel HP 14x117		Each	1	
Driving Piles		Foot	707	
Pile Shoes		Each	8	
Bar Splicers		Each	10	

**Length is height of spiral.

PILE DATA

Type: HP14x117
Nominal Required Bearing: 542 kips
Factored Resistance Available: 298 kips
Est. Length: 101'
No. Production Piles: 7
No. Test Piles: 1

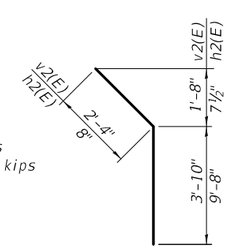

BARS v2(E) & h2(E)

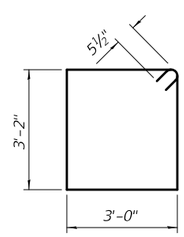

BAR s2(E)

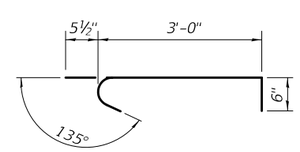

BAR s3(E)

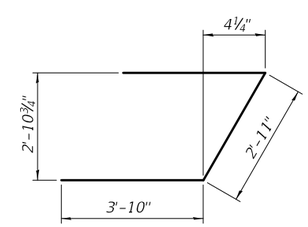

BAR u(E)

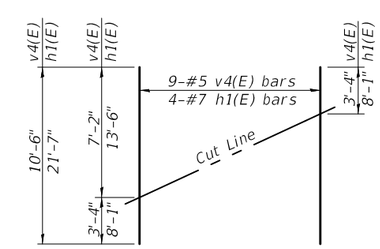

FIELD CUTTING DIAGRAM

Order v4(E) & h1(E) full length.
Cut as shown and use remainder of bars in opposite face.

PRINT DRIVER = sb_TDRV54
PGN. TABLE = BENTBLS4
SCALE = 1 : 1 = 1 : 1
FILE NAME = D:\78841-78454-28-E4ut.dgn

ESCA CONSULTANTS, INC.

USER NAME = kjk	DESIGNED - KJA	05/18	REVISED -		
ESCA PROJECT NO. 1259.09	CHECKED - RTM/ELH	05/18	REVISED -		
PLOT SCALE = 0:2 ':" / in.	DRAWN - KAH/JMK	08/18	REVISED -		
PLOT DATE = 12/11/2018 7:58:51 AM	CHECKED - KJA	11/18	REVISED -		

STATE OF ILLINOIS
DEPARTMENT OF TRANSPORTATION

EAST ABUTMENT
STRUCTURE NO. 077-0041

SHEET NO. 20 OF 26 SHEETS

F.A.I. RTE.	SECTION	COUNTY	TOTAL SHEETS	SHEET NO.
57	(77-1-3)HB-2	PULASKI	92	66

CONTRACT NO. 78454

ILLINOIS | FED. AID PROJECT

Notes:
Space reinforcement in cap to miss anchor bolts.
Pour steps monolithically with cap.
For details of piles, see sheet 22 of 26.

PILE DATA

Type: HP14x89
Nominal Required Bearing: 705k
Factored Resistance Available: 388k
Est. Length: 85'
No. Production Piles: 25
No. Test Piles: 1

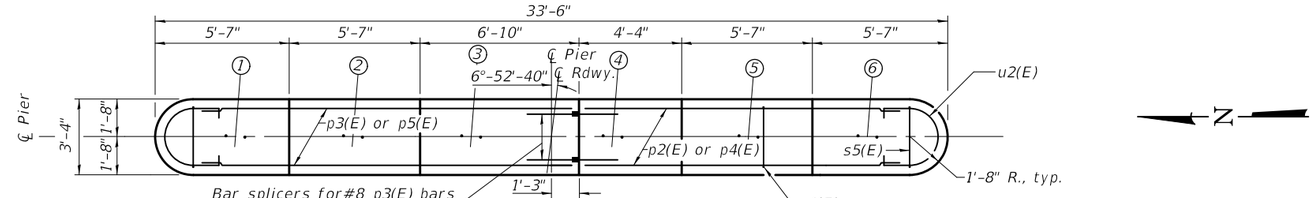

TOP PLAN

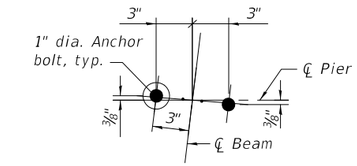

ANCHOR BOLT LAYOUT

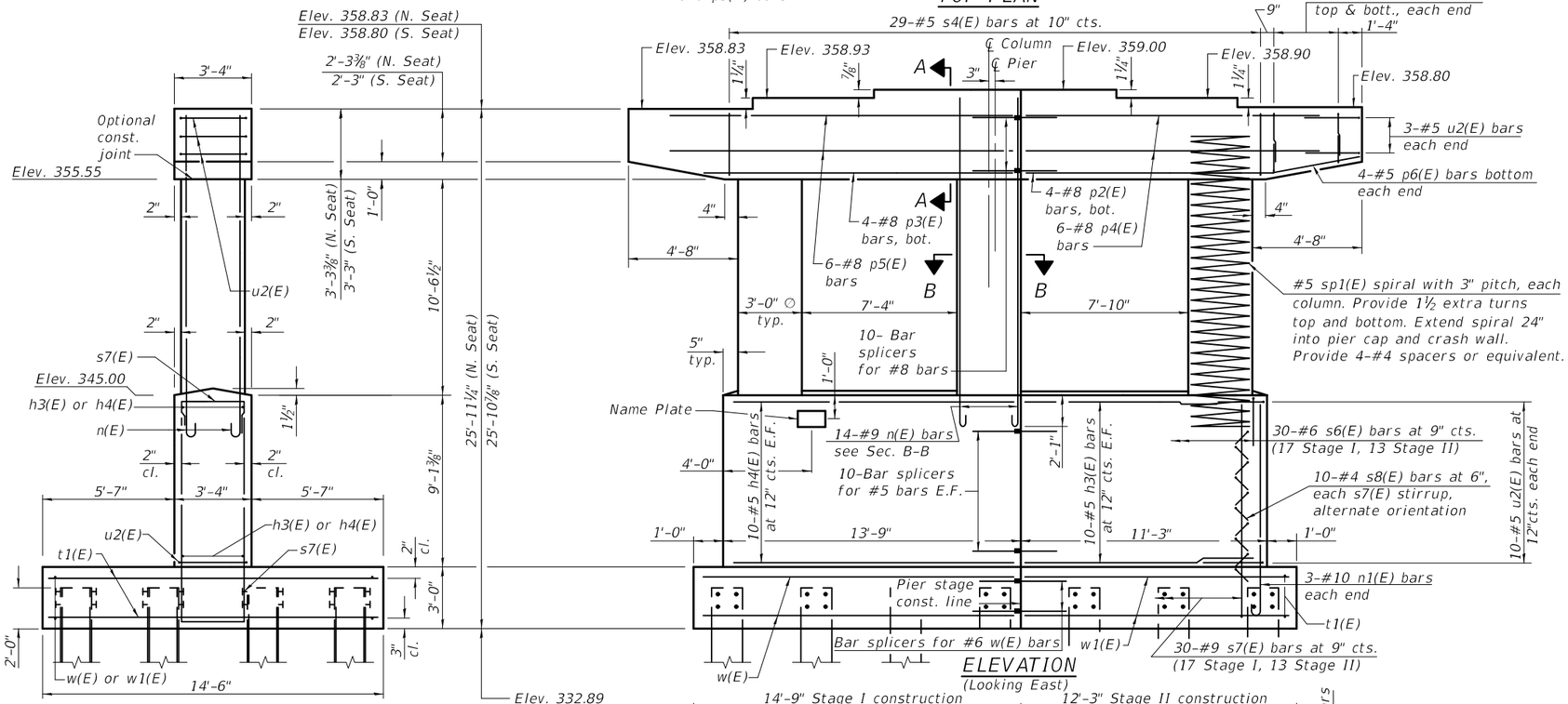

END VIEW

ELEVATION
(Looking East)

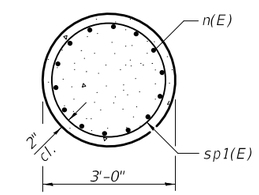

SEC. B-B

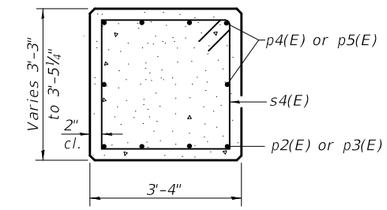

SEC. A-A

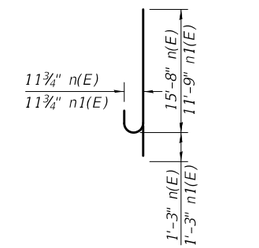

BARS n(E) & n1(E)

BILL OF MATERIAL

Bar	No.	Size	Length	Shape
h3(E)	20	#5	9'-5"	
h4(E)	20	#5	11'-11"	
n(E)	42	#9	16'-11"	
n1(E)	6	#9	13'-0"	
p2(E)	4	#8	10'-10"	
p3(E)	4	#8	13'-4"	
p4(E)	6	#8	13'-8"	
p5(E)	6	#8	16'-2"	
p6(E)	8	#5	4'-1"	
s4(E)	29	#5	12'-9"	
s5(E)	16	#5	7'-6"	
s6(E)	30	#6	9'-0"	
s7(E)	30	#9	26'-6"	
s8(E)	300	#4	4'-0"	
** sp1(E)	3	#5	14'-7"	
t1(E)	56	#6	14'-2"	
u2(E)	26	#5	13'-7"	
w(E)	30	#6	14'-5"	
w1(E)	30	#6	11'-11"	
Structure Excavation			Cu. Yd.	130
Concrete Structures			Cu. Yd.	92.4
Reinforcement Bars, Epoxy Coated			Pound	12700
Furnishing Steel Piles HP 14x89			Foot	2125
Driving Piles			Foot	2125
Test Pile Steel HP 14x89			Each	1
Pile Shoes			Each	26
Bar Splicers			Each	60

** Length is height of spiral.

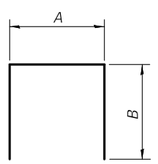

BARS s5(E), s6(E) & s7(E)

A & B DIMENSIONS

Bar	A	B
s5(E)	3'-0"	2'-3"
s6(E)	3'-0"	3'-0"
s7(E)	3'-0"	11'-9"

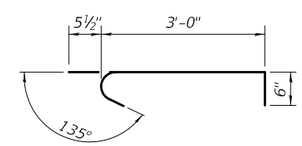

BAR s8(E)

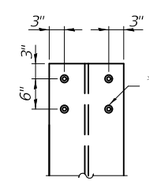

*4-¾" dia. x 4" Granular or solid flux filled headed studs automatically end welded (Typ. each flange, each pile)

SHEAR STUD DETAIL

*Cost included with Furnishing Piles.

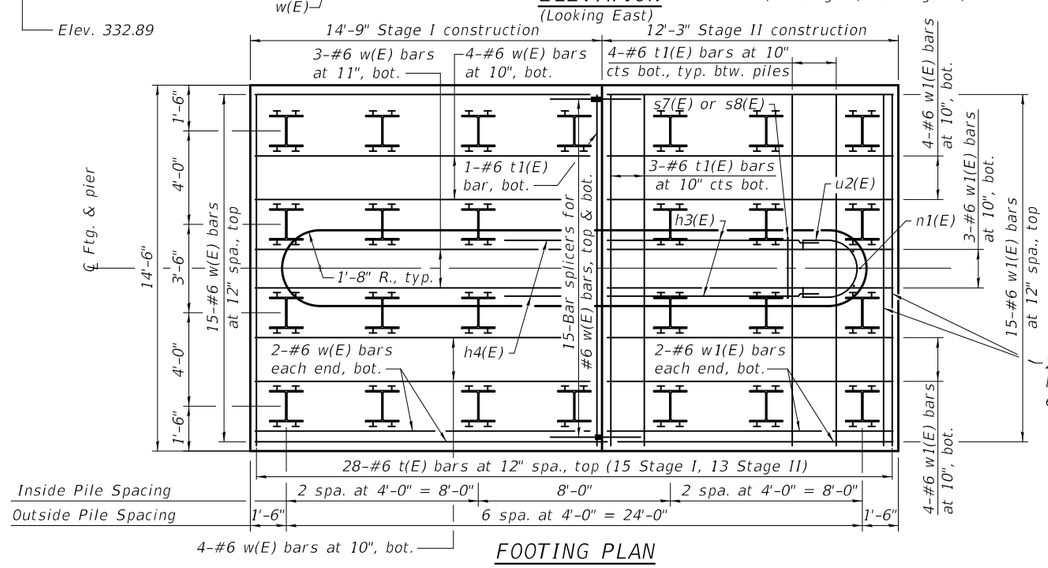

FOOTING PLAN

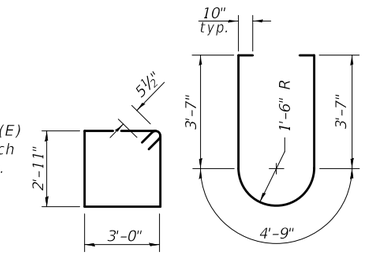

BAR s4(E) BAR u2(E)

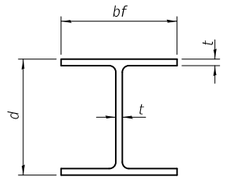

STEEL PILE TABLE

Designation	Depth d	Flange width bf	Web and Flange thickness t	Encasement diameter A
HP 14x117	14¼"	14⅞"	13/16"	30"
x102	14"	14¾"	11/16"	30"
x89	13⅞"	14¾"	⅝"	30"
x73	13⅝"	14⅝"	½"	30"
HP 12x84	12¼"	12¼"	11/16"	24"
x74	12⅛"	12¼"	⅝"	24"
x63	12"	12⅛"	½"	24"
x53	11¾"	12"	7/16"	24"
HP 10x57	10"	10¼"	9/16"	24"
x42	9¾"	10⅛"	7/16"	24"
HP 8x36	8"	8⅛"	7/16"	18"

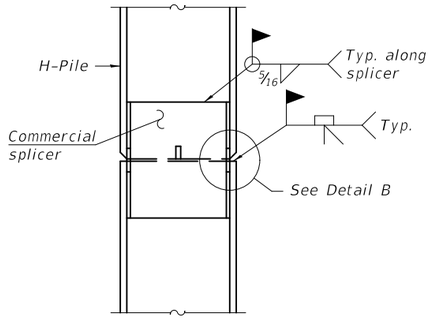

ELEVATION

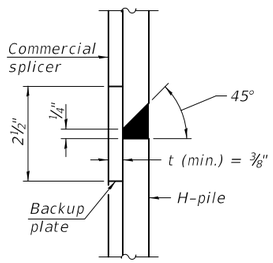

DETAIL "B"

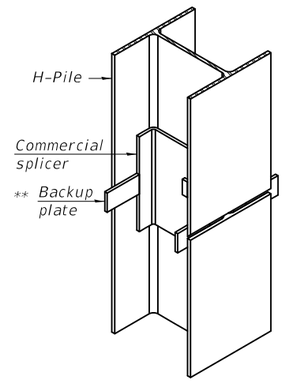

ISOMETRIC VIEW

WELDED COMMERCIAL SPLICE

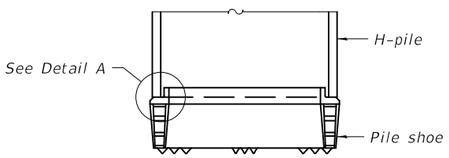

ELEVATION

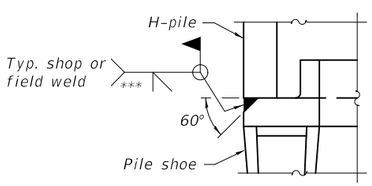

DETAIL A

SHOE ATTACHMENT

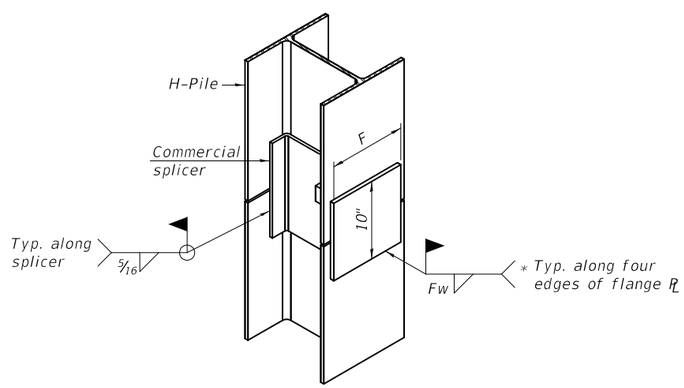

ISOMETRIC VIEW

WELDED COMMERCIAL SPLICE ALTERNATE

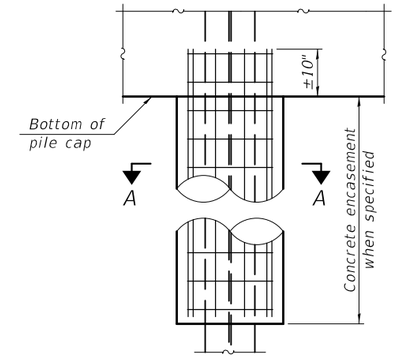

ELEVATION

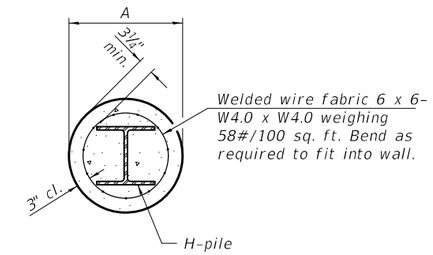

SECTION A-A

INDIVIDUAL PILE CONCRETE ENCASEMENT

(Forms for encasement may be omitted when soil conditions permit).

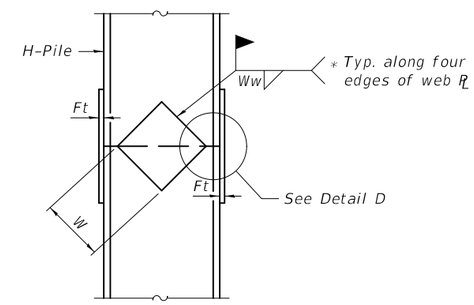

ELEVATION

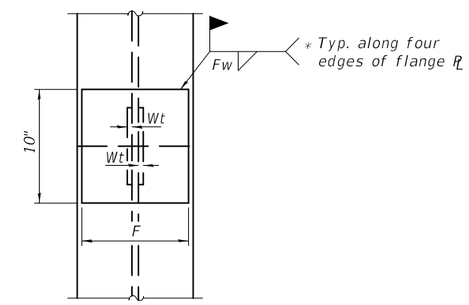

END VIEW

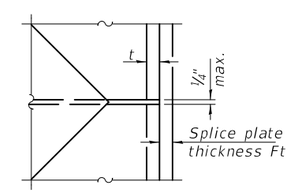

DETAIL D

Designation	F	Ft	Fw	W	Wt	Ww
HP 14x117	12½"	1"	⅞"	7¾"	⅝"	½"
x102	12½"	⅞"	¾"	7¾"	⅝"	½"
x89	12½"	¾"	11/16"	7¾"	⅝"	½"
x73	12½"	⅝"	9/16"	7¾"	⅝"	½"
HP 12x84	10"	⅞"	11/16"	6½"	⅝"	½"
x74	10"	⅞"	11/16"	6½"	⅝"	½"
x63	10"	⅝"	½"	6½"	½"	⅜"
x53	10"	⅝"	½"	6½"	½"	⅜"
HP 10x57	8"	¾"	9/16"	5¼"	½"	⅜"
x42	8"	⅝"	9/16"	5¼"	½"	⅜"
HP 8x36	7"	⅝"	7/16"	4¼"	½"	⅜"

WELDED PLATE FIELD SPLICE

Note:
The steel H-piles shall be according to AASHTO M270 Grade 50.

* Interrupt welds ¼" from end of web and/or each flange.

** Remove portions of backup plates that extend outside the flanges.

*** Weld size per pile shoe manufacturer (5/16" min.).

F-HP 8-11-2017

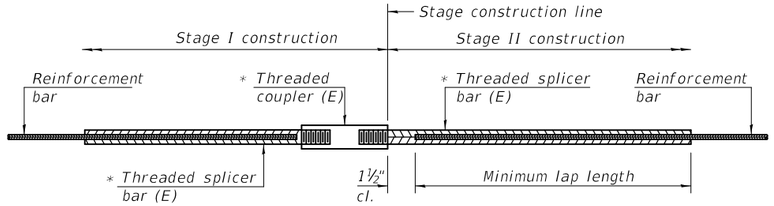

STANDARD BAR SPLICER ASSEMBLY

Threaded splicer bar length = min. lap length + 1½" + thread length

* Epoxy not required on Bar Splicer Assembly components used in conjunction with black bars.

Location	Bar size	No. assemblies required	Minimum lap length
Top of Slab	#5	330	3'-0"
Bottom of Slab	#5	232	3'-6"
Diaphragms	#6	10	4'-0"
Top of Approach	#5	92	3'-4"
Bottom of Approach	#8	120	4'-9"
Top of Approach Ftg.	#5	40	3'-2"
Bottom of Approach Ftg.	#5	40	3'-2"
West Abutment	#7	10	5'-0"
East Abutment	#7	10	5'-0"
Crash Wall	#5	20	3'-7"
Pier Cap	#8	10	5'-9"
Top of Pier Footing	#6	15	4'-4"
Bottom of Pier Footing	#6	15	3'-10"

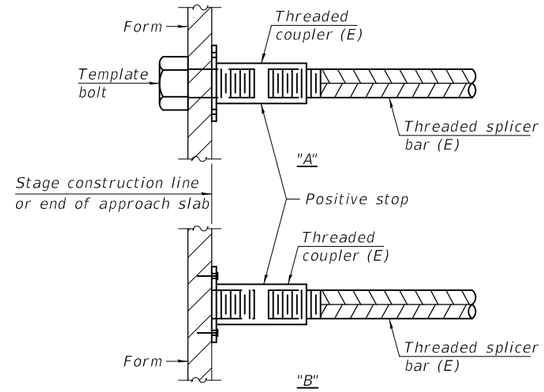

INSTALLATION AND SETTING METHODS

"A" : Set bar splicer assembly by means of a template bolt.
"B" : Set bar splicer assembly by nailing to wood forms or cementing to steel forms.
(E) : Indicates epoxy coating.

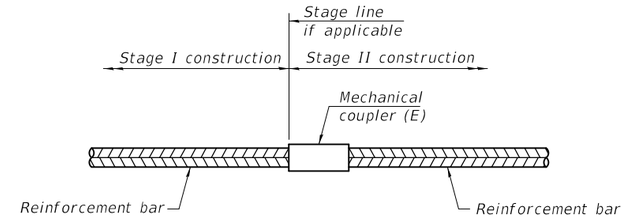

STANDARD MECHANICAL SPLICER

Location	Bar size	No. assemblies required

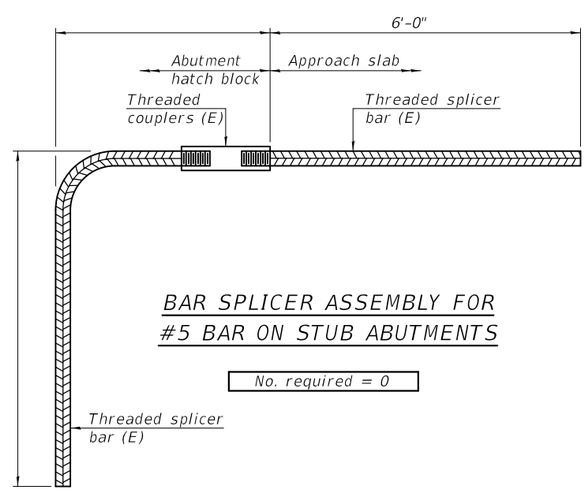

BAR SPLICER ASSEMBLY FOR #5 BAR ON STUB ABUTMENTS

No. required = 0

NOTES

Splicer bars shall be deformed with threaded ends and have a minimum 60 ksi yield strength.

All reinforcement shall be lapped and tied to the splicer bars.

Bar splicer assemblies shall be epoxy coated according to the requirements for reinforcement bars. See Section 508 of the Standard Specifications.

See approved list of bar splicer assemblies and mechanical splicers for alternatives.

BSD-1 2-17-2017

PRINT DRIVER = $PLTDRV$$
PEN TABLE = $PENTBL$$
PLOT SCALE = 1:1
FILE NAME = 0778041-78454-23-Bar-Splr-Details.dgn

ESCA CONSULTANTS, INC. CIVIL & STRUCTURAL ENGINEERS

USER NAME = kjk	DESIGNED - KJA	05/18	REVISED -	STATE OF ILLINOIS DEPARTMENT OF TRANSPORTATION	BAR SPLICER ASSEMBLY AND MECHANICAL SPLICER DETAILS STRUCTURE NO. 077-0041
ESCA PROJECT NO. 1259.09	CHECKED - RTM/ELH	05/18	REVISED -		
PLOT SCALE = 0:2 ':' / in.	DRAWN - KAH/JMK	08/18	REVISED -		
PLOT DATE = 12/11/2018 7:58:53 AM	CHECKED - KJA	11/18	REVISED -		SHEET NO. 23 OF 26 SHEETS

F.A.I. RTE.	SECTION	COUNTY	TOTAL SHEETS	SHEET NO.
57	(77-1-3)HB-2	PULASKI	92	69
		CONTRACT NO. 78454		
	ILLINOIS	FED. AID PROJECT		

ILLINOIS DEPARTMENT OF TRANSPORTATION
District Nine Materials

Bridge Foundation
Boring Log
Sheet 1 of 2

FAS 938-CH 7 (Shawnee College Road) Over FAI 57

Route: FAS 938-CH 7 Structure Number: 077-0026 Date: 6/4/2015
Section 77-1HB-3 Bored By: R Moberly
County: Pulaski Location: Checked By: R Graeff

Boring No 1-S
Station 77+53
Offset 51' Rt CL FAS 938
Ground Surface 339.8 Ft

Surf Wat Elev:
Ground Water Elevation
when Drilling 335.3
At Completion
At: Hrs:

Description	Depth	Blows	Qu tsf	W%
Very stiff, moist, grey and brown, Clay to Silty Clay A7-6		2 7 10	2.3S	17
335.3				
Soft, very moist, grey, Silty Clay Loam A-6	5.0	1 2 2	0.3B	25
332.8				
Stiff, moist, grey, Clay A7-6		1 2 3	1.8B	27
330.3				
Medium, very moist, grey mottled brown, Silty Clay A-6	10.0	1 1 2	0.7B	31
327.8				
Soft, very moist, grey mottled brown, Silty Clay A-6		WH WH 1	0.4B	30
325.3				
Stiff, moist, grey mottled brown, Silty Clay to Clay A7-6	15.0	1 2 2	1.2B	25
322.8				
Medium, very moist, grey brown, Silty Clay Loam A-6		WH WH 1	0.6B	35
	20.0	1 2 2	0.8S	31
317.8				
Stiff, moist to very moist, grey, Silt Loam to Silty Clay Loam A-4		1 2 3	1.2S	26
315.3				
	25.0	WH		
Soft to medium, very moist, grey, Silty Clay to Clay A-6		WH WH	0.5B	27
312.8				
Stiff, moist, grey, Clay A7-6		WH 1 2	1.2B	25
	30.0	1 2 2	1.3B	32
		WH 1 2	1.2B	39
	35.0	1 2 2	1.7B	24
302.8				
Medium, very moist, grey, Clay A7-6		WH WH 1	0.9B	30
300.3				
Stiff, moist, grey, Clay A7-6	40.0	1 3 4	1.2B	29
295.3				
Very stiff, moist, grey and brown, Clay A7-6	45.0	2 5 8	2.9B	24
	50.0	1		

N-Std Pentr Test: 2" OD Sampler,140# Hammer, 30" Fall (Type Fail. B-Bulge S-Shear E-Estimated P-Penetrometer)

Sheet 2 of 2

Route: FAS 938-CH 7
Section: 77-1HB-3
County: Pulaski
Date: 6/4/2015

Boring No: 1-S
Station: 77+53
Offset: 51' Rt CL FAS 938
Ground Surface: 339.8 Ft

Description	Depth	Blows	Qu tsf	W%
Very stiff, moist, brown, Clay A7-6		4 5	2.1B	30
285.3				
Stiff, moist to very moist, grey, Clay A7-6	55.0	WH 1 1	1.1B	28
280.3				
Medium, very moist, grey, Clay A7-6	60.0	1 1 2	0.8B	27
275.3				
Soft, very moist, grey, Clay A7-6	65.0	WH WH 1	0.4B	27
270.3				
Stiff, moist, grey, Clay A7-6	70.0	WH 2 1	1.2B	27
	75.0	6		
Very stiff, moist, grey, Clay A7-6 with Gravel		8 9	3.1B	20
260.3				
Very stiff, moist, red brown, Clay A7-6 with Gravel	80.0	3 7 7	2.5B	35
	85.0			
252.3				
Hard, dry, grey, Limestone				
Refusal at 89.0 feet	250.8			
Cored 89.0 to 94.0 feet	90.0			
60% Recovery; 43% RQD				
Hard, dry, grey, Limestone with Clay layers (Boulders??)				
245.8				
Bottom of hole = 94.0 feet	95.0			
Free water observed at 4.5 feet				
Elevation referenced to BM 300; Elevation = 341.3 feet				
Borehole advanced with hollow stem auger (8" O.D, 3.25" I.D.)				
To convert "N" values to "N60" multiply by 1.25	100.0			

N-Std Pentr Test: 2" OD Sampler,140# Hammer, 30" Fall (Type Fail. B-Bulge S-Shear E-Estimated P-Penetrometer)

PRINT DRIVER = $PL_TDRV$$
PEN TABLE = $PENTBL$$
PLOT NAME = $PLNAME$$
FILE NAME = 0778041-78454-24-Sol.dgn

ESCA CONSULTANTS, INC.

USER NAME = kjk	DESIGNED - KJA	05/18	REVISED -	STATE OF ILLINOIS DEPARTMENT OF TRANSPORTATION	BORING LOGS STRUCTURE NO. 077-0041
ESCA PROJECT NO. 1259.09	CHECKED - RDP	05/18	REVISED -		
PLOT SCALE = 0:2 ':' / in.	DRAWN - KAH/JMK	08/18	REVISED -		
PLOT DATE = 12/11/2018 7:58:54 AM	CHECKED - KJA	08/18	REVISED -		SHEET NO. 24 OF 26 SHEETS

F.A.I. RTE.	SECTION	COUNTY	TOTAL SHEETS	SHEET NO.
57	(77-1-3)HB-2	PULASKI	92	70
		CONTRACT NO. 78454		
	ILLINOIS	FED. AID PROJECT		

ILLINOIS DEPARTMENT OF TRANSPORTATION
District Nine Materials

Bridge Foundation
Boring Log
Sheet 1 of 2

FAS 938-CH 7 (Shawnee College Road) Over FAI 57

Route: FAS 938-CH 7 Structure Number: 077-0026 Date: 6/9/2015
Section 77-1HB-3 Bored By: R Moberly
County: Pulaski Location: Checked By: R Graeff

Boring No 2-S
Station 76+22
Offset 9' LT CL FAS 938
Ground Surface 362.5 Ft

Surf Wat Elev:
Ground Water Elevation when Drilling 330.5
At Completion
At: Hrs:

	DEPTH	BLOWS	Qu tsf	W%
15" Concrete over crushed aggregate				
360.5				
Stiff, moist, grey mottled brown, Clay A7-6		1		
		1	1.1B	27
		2		
	5.0	1		
		2	1.3B	25
		2		
		1		
		3	1.6B	26
		3		
353.0				
Stiff, moist, brown, Silty Clay A-6	10.0	2		
		3	1.7B	19
		4		
350.5				
Very stiff, moist, brown mottled grey, Clay A7-6		1		
		3	2.1B	21
		4		
	15.0	2		
		7	3.9B	20
		9		
		1		
		5	3.2B	22
		6		
343.0				
Stiff, moist, brown mottled grey, Clay A7-6	20.0	2		
		4	1.9B	22
		5		
340.5				
Very stiff, moist, brown, Clay to Silty Clay A7-6		2		
		8	2.9B	21
		10		
338.0				
	25.0	2		

	DEPTH	BLOWS	Qu tsf	W%
Very stiff, moist, grey mottled brown, Clay A7-6		4	2.9B	23
		5		
335.5				
Stiff, moist, grey mottled brown, Silty Clay A-6		1		
		2	1.2B	29
		3		
333.0				
Medium, very moist, grey mottled brown, Silty Clay A7-6	30.0	WH		
		1	0.7B	34
		1		
330.5				
Soft, very moist to wet, grey mottled brown, Clay A7-6		WH		
		WH	0.3B	29
		WH		
328.0				
Medium to stiff, moist to very moist, grey mottled brown, Silty Clay A-6	35.0	1		
		2	1.0B	25
		2		
325.5				
Stiff, moist to very moist, grey, Silty Clay Loam A-4		1		
		2	1.2B	26
		2		
323.0				
Very soft, very moist, grey, Silty Clay Loam A-6	40.0	WH		
		WH	0.2B	30
		WH		
318.0				
Medium, very moist, grey, Silty Clay A-6	45.0	WH		
		1	0.7B	26
		1		
313.0				
	50.0	1		

N-Std Pentr Test: 2" OD Sampler,140# Hammer, 30" Fall (Type Fail. B-Bulge S-Shear E-Estimated P-Penetrometer)

Sheet 2 of 2

Route: FAS 938-CH 7
Section: 77-1HB-3
County: Pulaski
Date: 6/9/2015

Boring No: 2-S
Station: 76+22
Offset: 9' LT CL FAS 938
Ground Surface: 362.5 Ft

	DEPTH	BLOWS	Qu tsf	W%
Stiff, moist, grey and brown, Clay A7-6		2	1.3B	22
		3		
308.0				
Very stiff, moist, brown mottled grey, Clay A7-6	55.0	2		
		5	3.9B	24
		6		
303.0				
Stiff, moist, brown mottled grey, Clay A7-6 with some Gravel	60.0	1		
		3	1.9B	26
		6		
298.0				
Medium, very moist, grey and brown, Silty Clay to Clay A7-6	65.0	1		
		1	0.7B	29
		2		
293.0				
Soft to medium, very moist, grey, Clay A7-6	70.0	WH		
		WH	0.5B	57
		1		
288.5				
Hard, dry, grey, Limestone		100/1/2"		
287.5	75.0	Refusal		

Bottom of hole = 74.8 feet

Free water observed at 32.0 feet

Elevation referenced to BM 300; Elevation = 341.3 feet

Borehole advanced with hollow stem auger (8" O.D, 3.25" I.D.)

To convert "N" values to "N60" multiply by 1.25

DEPTH
80.0
85.0
90.0
95.0
100.0

N-Std Pentr Test: 2" OD Sampler,140# Hammer, 30" Fall (Type Fail. B-Bulge S-Shear E-Estimated P-Penetrometer)

ILLINOIS DEPARTMENT OF TRANSPORTATION
District Nine Materials

Bridge Foundation Boring Log
Sheet 1 of 3

FAS 938-CH 7 (Shawnee College Road) Over FAI 57

Route: FAS 938-CH 7 Structure Number: 077-0026 Date: 6/11/2015
Section 77-1HB-3 Bored By: R Moberly
County: Pulaski Location: Checked By: R Graeff

Boring No 3-S
Station 78+71
Offset 10' RT CL FAS 938
Ground Surface 359.5 Ft

Surf Wat Elev:
Ground Water Elevation
when Drilling 320.1
At Completion
At: Hrs:

Description	Depth	Blows	Qu tsf	W%
18" Concrete over crushed aggregate				
357.5				
Stiff, moist, grey mottled brown, Clay A7-6		1		
		2	1.5B	22
		3		
355.0				
Very stiff, moist, grey mottled brown, Clay A7-6	5.0	1		
		2	2.3B	21
		4		
352.5				
Stiff, moist, grey mottled brown, Clay A7-6		1		
		4	1.8B	22
		5		
	10.0	2		
		5	1.6B	23
		6		
347.5				
Very stiff, moist, grey mottled brown, Clay A7-6		2		
		4	2.3B	27
		5		
	15.0	1		
		4	2.5B	20
		7		
		2		
		6	3.1B	31
		10		
340.0				
Very stiff, moist, brown and grey, Silty Clay Loam A-6	20.0	2		
		5	2.1B	24
		8		
337.5				
Very stiff, moist, grey mottled brown, Silty Clay to Clay A-6		2		
		6	2.7B	20
		10		
335.0				
	25.0	1		
Very stiff, moist, grey mottled brown, Clay A7-6		5	3.9B	20
		8		
332.5				
Very stiff, moist, brown, Silty Clay A-6		4		
		8	3.7B	20
		10		
	30.0	1		
		4	2.9B	20
		7		
327.5				
Stiff, moist, grey, Silty Clay A-6		2		
		3	1.6B	22
		4		
325.0				
Medium, very moist, grey, Silty Clay to Clay A7-6	35.0	1		
		2	0.7B	26
		2		
322.5				
Stiff, moist, grey mottled brown, Clay A7-6		1		
		3	1.9B	23
		3		
320.0				
Soft, very moist to wet, brown mottled grey, Silty Clay A-6	40.0	WH		
		WH	0.3B	28
		1		
315.0				
Stiff, moist to very moist, brown, Clay A7-6	45.0	1		
		2	1.1B	25
		2		
310.0				
	50.0	1		

N-Std Pentr Test: 2" OD Sampler,140# Hammer, 30" Fall (Type Fail. B-Bulge S-Shear E-Estimated P-Penetrometer)

Sheet 2 of 3

Route: FAS 938-CH 7 Date: 6/11/2015
Section: 77-1HB-3
County: Pulaski

Boring No: 3-S
Station: 78+71
Offset: 10' RT CL FAS 938
Ground Surface: 359.5 Ft

Description	Depth	Blows	Qu tsf	W%
Stiff, moist, grey, Clay A7-6		2	1.3B	30
		2		
	55.0	1		
		2	1.4B	24
		2		
	60.0	1		
		2	1.8B	24
		3		
295.0				
Very stiff, moist, grey mottled brown, Clay A7-6	65.0	1		
		2	2.8B	24
		3		
290.0				
Very stiff, moist, brown, Silty Clay Loam A-4	70.0	3		
		4	2.4S	26
		7		
285.0				
	75.0	WH		
Very stiff, moist, grey, Clay A7-6		1	2.1B	25
		2		
280.0				
Stiff, moist, grey, Clay to Silty Clay A7-6	80.0	1		
		2	1.9B	25
		4		
85.0				
270.0				
Soft, very moist, grey, Clay A7-6 with gravel	90.0	1		
		1	0.3B	22
		2		
95.0				
260.0				
	100.0	1		

N-Std Pentr Test: 2" OD Sampler,140# Hammer, 30" Fall (Type Fail. B-Bulge S-Shear E-Estimated P-Penetrometer)

Sheet 3 of 3

Route: FAS 938-CH 7 Date: 6/11/2015
Section: 77-1HB-3
County: Pulaski

Boring No: 3-S
Station: 78+71
Offset: 10' RT CL FAS 938
Ground Surface: 359.5 Ft

Description	Depth	Blows	Qu tsf	W%
Very stiff, moist, grey, Clay A7-6		2	2.1B	33
		3		
++++++++++++++++++++ 65.1 tons ESF at 103.0 feet ++++++++++++++++++++				
Augered without sampling to determine depth to bedrock or Limestone boulders	105.0			
	110.0			
	115.0			
	120.0			
Boring abandoned at 124.5 feet when loose Sand was encountere and drill rods fell through augers for about 3 feet.	235.0			
	125.0			

Bottom of hole = 124.5 feet

Free water observed at 39.5 feet

Elevation referenced to BM 300; Elevation = 341.3 feet

Borehole advanced with hollow stem auger (8" O.D, 3.25" I.D.)

To convert "N" values to "N60" multiply by 1.25

Depth
130.0
135.0
140.0
145.0
150.0

N-Std Pentr Test: 2" OD Sampler,140# Hammer, 30" Fall (Type Fail. B-Bulge S-Shear E-Estimated P-Penetrometer)

PRINT DRIVER = $PLTDRV$$
PEN TABLE = $PENTBL$$
WIDTH TABLE = $WIDTH$$
FILE NAME = 077B041-78454-26-Soil.dgn

ESCA CONSULTANTS, INC.
TRAFFIC & TRANSPORTATION ENGINEERS

USER NAME = kjk	DESIGNED - KJA	05/18	REVISED -		
ESCA PROJECT NO. 1259.09	CHECKED - RDP	05/18	REVISED -		
PLOT SCALE = 0:2 ':" / in.	DRAWN - KAH/JMK	08/18	REVISED -		
PLOT DATE = 12/11/2018 7:59:08 AM	CHECKED - KJA	08/18	REVISED -		

STATE OF ILLINOIS
DEPARTMENT OF TRANSPORTATION

BORING LOGS
STRUCTURE NO. 077-0041

SHEET NO. 26 OF 26 SHEETS

F.A.I. RTE.	SECTION	COUNTY	TOTAL SHEETS	SHEET NO.
57	(77-1-3)HB-2	PULASKI	92	72

CONTRACT NO. 78454

ILLINOIS | FED. AID PROJECT

BM - Spike and washer in Root 20" Elm
222 Lt. Sta 226+42 Elev. 328.37
No Existing Structure

STATE OF ILLINOIS
DEPARTMENT OF PUBLIC WORKS & BUILDINGS
DIVISION OF HIGHWAYS

ROUTE NO.	SECTION	COUNTY	TOTAL SHEETS	SHEET NO.
FAI 57 FAS 938	*	PULASKI	143	40

SHEET NO. 1 / 10 SHEETS

FED. ROAD DIST. NO. 7 | ILLINOIS | FED. AID PROJECT

* 77-1(3,HB-3,B-3,B-4)
16(RS,BY)

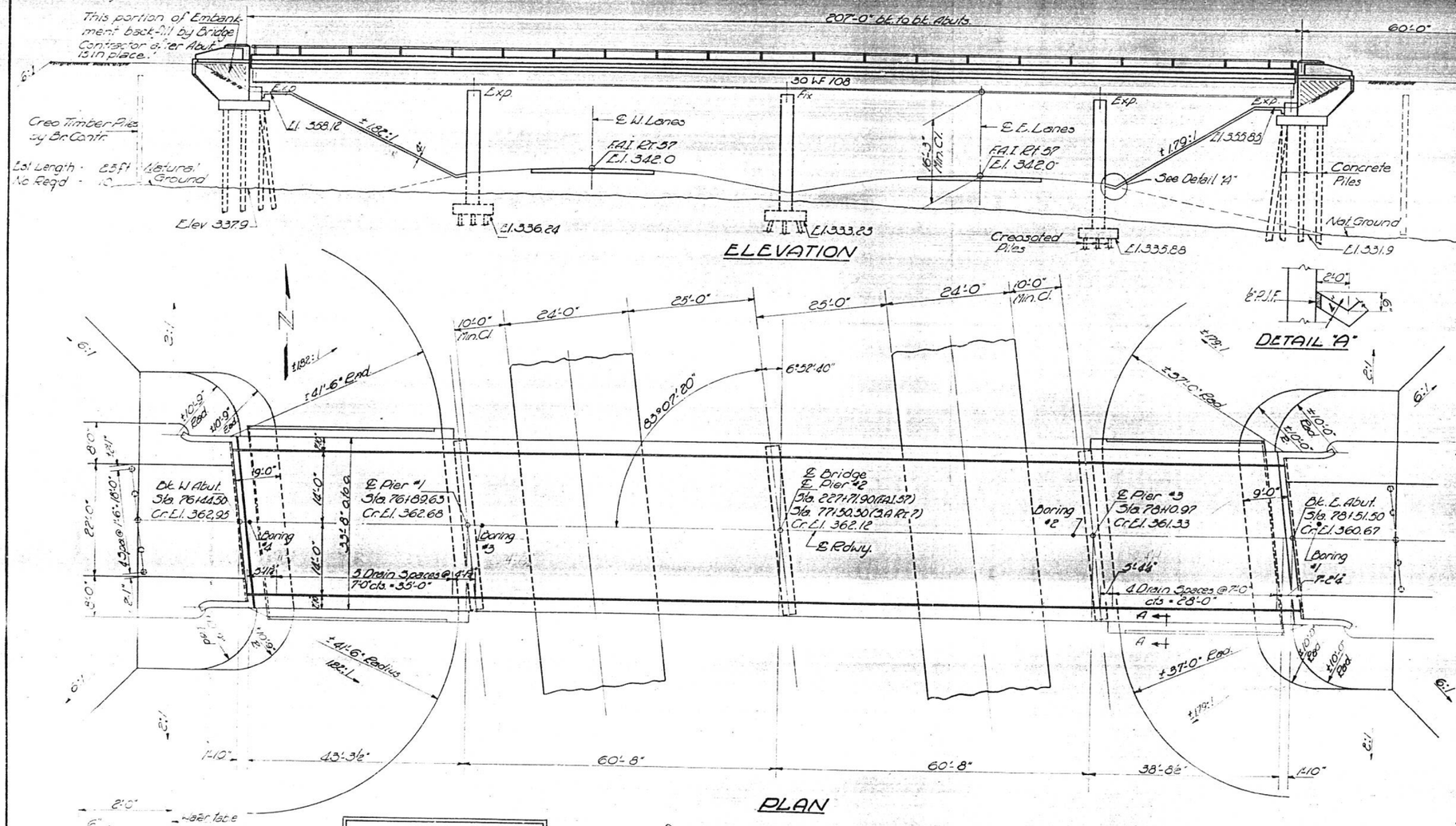

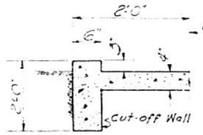

SECTION A-A

STATION 227+71.90
BUILT 196 BY
STATE OF ILLINOIS
F.A.I. RT. 57 SEC. 77-1HB-3
F.A. PROJ. I-57-1 (68)
LOADING H15-44

NAME PLATE
(See Std. 211.3-1)

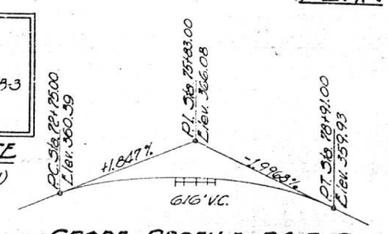

GRADE PROFILE S.A. RT. 7

0.00% Grade Elev. 342.0 ℄ Both Pvts. FAI Rt. 57

GRADE PROFILE F.A.I. 57

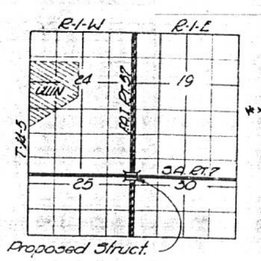

LOCATION PLAN

OCT 14 1960

DESIGNED	[signature]
CHECKED	[signature]
DRAWN	A. Barraza
CHECKED	[signature]

EXAMINED — M. E. Baumann, Engineer of Bridge and Traffic Structures
PASSED — [signature], Engineer of Design
APPROVED — [signature], Chief Highway Engineer

GENERAL NOTES

Class X Concrete shall be used throughout.

Coarse aggregate which is to be used in end post must be absolutely free of chert, flint, limonite, lignite and soft sandstone.

The Concrete Floor Slab shall be poured in one continuous operation btwn. joints & shall be finished in accordance with Art. 51.19 of the Std. Specs.

The Curb and Slab outside of longitudinal construction joint, shown on cross section, shall be poured monolithically.

All rivets shall be 3/4" ϕ unless noted.

All holes for splices shall be sub-punched 1/16" ϕ and reamed to proper size: 13/16" ϕ for 3/4" ϕ rivets; 15/16" ϕ for 7/8" ϕ rivets.

All rockers, bolster, bearing plates, lead plates, pintles and anchor bolts shall be fabricated and set in accordance with Art. 51.15 of the Standard Specifications and are included in quantity of structural steel. Estimated weight of this steel is 7,746 lbs.

Anchor bolts at abutments shall be set before fastening diaphragms over supports.

All structural steel & metal handrail shall be inspected by the Illinois Div. of Highways before painting.

Structural Steel, except the Anchor bolts, shall receive one shop coat of red lead paint & two field coats of aluminum paint. See Art. 56.1 to 56.5 inclusive of the Std. Specs.

All paint shall be furnished & applied by the Contractor.

The Slope Wall is to be reinforced with #4 gauge welded wire fabric 6"x6" mesh, & weighing not less than 58 lbs. per 100 sq. ft.

Welding shall comply with Art. 51.5(a) of the Std. Specifications.

Piles at abutments shall be precored in accordance with Art. 60.9(c) of the Standard Specifications.

No transverse Construction Joints shall be made in the slab except by written permission of the Engineer.

The Contractor shall drive 3 test piles; 1 concrete pile at East Abut. in a permanent location, and 2 timber test piles near pier #2 and pier #3, as directed by the Engineer before ordering the remainder of piles.

Structural Steel shall conform to ASTM specification A-36.

DESIGN STRESSES

f'c = 1,000 p.s.i. Super & Sub.
v = 75 p.s.i. Flg.
fs = 20,000 p.s.i. Reinf.
fs = 18,000 p.s.i. Struct.
n = 10

Loading - H15-44

TOTAL BILL OF MATERIAL

		ITEM	Super	Sub	Total
	Sq. Yds.	Protective Coat	81.9		81.9
	Cu. Yds.	Class "A" Excavation		130	130
	L. Sum	Bridge Seat Sealant		1	1
**	Cu. Yds.	Class X Concrete	194.2	206.2	400.4
	Lbs.	Structural Steel	163,280		163,280
	Lin. Ft.	Aluminum Handrail	410		410
	Lbs.	Reinforcement Bars	37,150	15,330	52,480
	Lin. Ft.	Creosoted Piles		2,050	2,050
	Ea.	Test Piles (Timber)		2	2
	Lin. Ft.	Concrete Piles		850	850
	Ea.	Test Piles (Conc.)		1	1
	Ea.	Name Plates		2	2
	Sq. Yds.	Slope Wall		422	422

* Includes Cut-off Wall ** Applied at Abutments.

GENERAL PLAN & ELEVATION
PROJECT I-57-1 (68)18
ULLIN INTERCHANGE
F.A.I. RT. 57 SEC. 77-1HB-3
PULASKI COUNTY
STA. 227+71.90

revised 7/1/61 In 3.1.4.7 on Inc. sent & type handrail changed to Aluminum & Parapet type handrail. Revised information about Bridge Seat Sealant & Revised Class X Concrete Quantities for Slabs, Slopes & dimension. Marked Creosoted Piles in Plans

In GENERAL NOTES removed Metal handrail from note for painting. In BILL OF MTL removed item Bridge Exc. 25,350 Cu. yds & Paint handrail 410 Lin. ft.

Surf. chgd. from 82,480 Lb. (Super.) to 37,150, from 42,790 (Total) to 52,480 Lbs. Class X Conc. chgd. from 193 (Super) to 194.2, from 207.3 (Sub.) to 206.2. In Slope Wall added at the top of the wall & omitted corner in front of Abut. In Grade Profile F.A.I. Sta. chgd. from 77+50.00 to 400.6 Sta. Total Rev. Sta. 227+71.90

ESCA CONSULTANTS, INC.

USER NAME = kjk	DESIGNED - KJK	REVISED -	
ESCA PROJECT NO. 1259.09	DRAWN - KJK	REVISED -	
PLOT SCALE = 0:2 ' / in.	CHECKED - ELH	REVISED -	
PLOT DATE = 12/11/2018 7:59:24 AM	DATE - 07/18	REVISED -	

STATE OF ILLINOIS
DEPARTMENT OF TRANSPORTATION

EXISTING BRIDGE PLANS
FOR INFORMATION ONLY

SCALE: NONE | SHEET NO. 1 OF 6 SHEETS | STA. | TO STA.

F.A.I. RTE.	SECTION	COUNTY	TOTAL SHEETS	SHEET NO.
57	(77-1-3)HB-2	PULASKI	92	73

CONTRACT NO. 78454

FED. ROAD DIST. NO. | ILLINOIS | FED. AID PROJECT

STATE OF ILLINOIS
DEPARTMENT OF PUBLIC WORKS & BUILDINGS
DIVISION OF HIGHWAYS

* 77-1(3,HB-3, B-3, B-4)
16 (RS, BY)

ROUTE NO.	SECTION	COUNTY	TOTAL SHEETS	SHEET NO.
FAI 57 / FAS 938	*	PULASKI	43	41
FED. ROAD DIST. NO. 7		ILLINOIS	FED. AID PROJECT-	

SHEET NO. 2
10 SHEETS

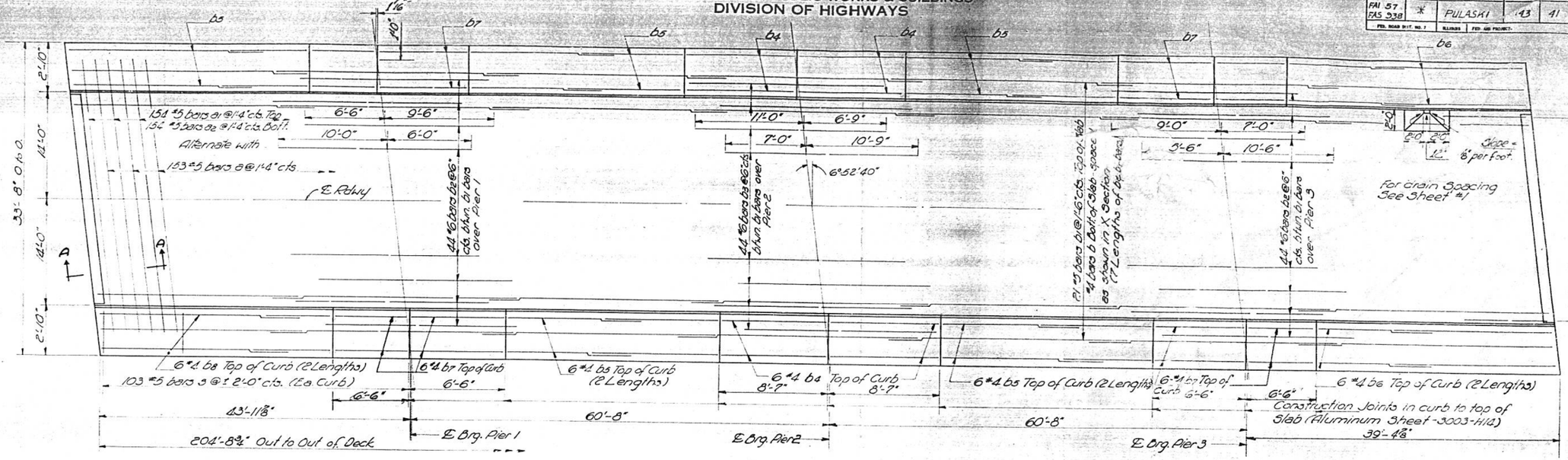

PLAN

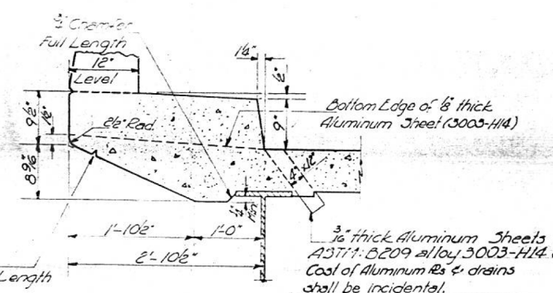

CURB DETAIL

3/16" thick Aluminum Sheets welded ASTM-B209 alloy 3003-H14 or 6061-T6
Cost of Aluminum ℞s & drains shall be incidental.

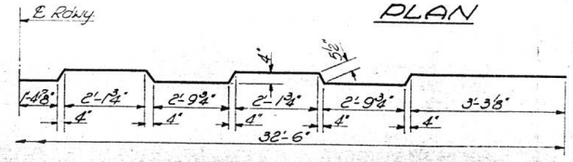

BAR a

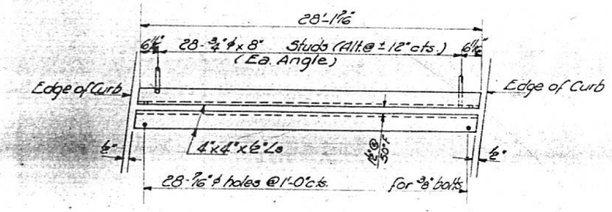

EXPANSION GUARD DETAIL

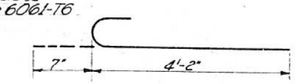

BAR X

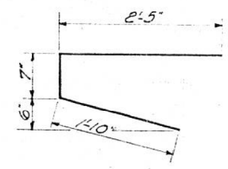

BAR 3

7/16"ϕ holes @ 12" cts. for 3/4" bolts set on 2 1/2" gage line. All bolts shall be burrhed, sawed, or clipped off flush with back of angles after forms are removed.

Shaded area to be poured after superstructure falsework has been removed.
Quantity of Cl. X Conc. included with Superstr.

METHOD OF DETERMINING FILLET HEIGHT "f"

After all Structural Steel has been erected elevations of the top flanges of the beams shall be taken at intervals not to exceed 10 Ft. From these elevations subtract the increment of deflections for these points, determined from D.L. Deflection Diag. The elevations so attained subtracted from the theoretical grade elevations minus floor thickness, equals the fillet heights above top of beam.

DESIGNED	Robert F. Mauer	EXAMINED	M.E. Bauman (ENGINEER OF BRIDGE AND TRAFFIC STRUCTURES)
CHECKED	Robert Gander	PASSED	(ENGINEER OF DESIGN)
DRAWN	A. Barraza	APPROVED	R. R. Bartelsmeyer (CHIEF HIGHWAY ENGINEER)
CHECKED			

OCT 14 1960

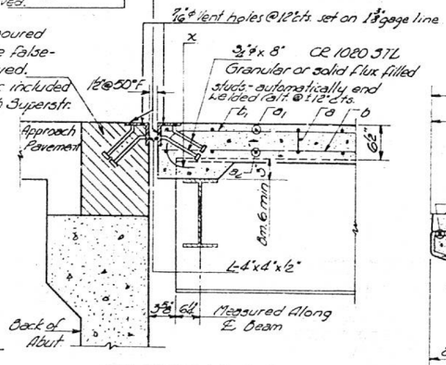

SECTION A-A

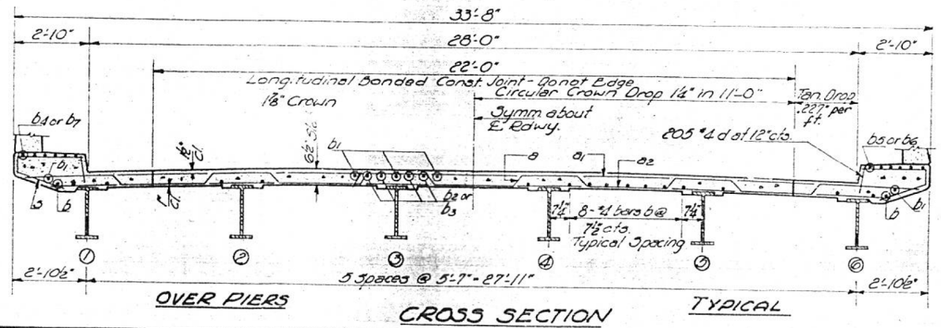

OVER PIERS — CROSS SECTION — TYPICAL

BILL OF MATERIAL

Bar	No.	Size	Length	Shape
a	153	5	33'-9"	
a1	154	5	32'-6"	
a2	154	5	30'-0"	
b	308	4	30'-0"	
b1	147	5	30'-3"	
b2	88	6	16'-0"	
b3	44	6	17'-9"	
b4	24	4	8'-0"	
b5	48	4	23'-0"	
b6	24	4	16'-9"	
b7	48	4	6'-0"	
b8	24	4	19'-0"	
d	410	4	1'-3"	
3	206	5	4'-10"	
X	76	5	4'-9"	
Class X Concrete			Cu. Yds.	171.0
Reinforcement Bars			Lbs.	32,920
Structural Steel			Lbs.	163,280

SUPERSTRUCTURE
F.A.I. RT. 57 SEC. 77-1HB-3
PULASKI COUNTY
STA. 227+71.9

Revised 7/2018 In PLAN added joints in Curb, reinforcement revised in curb & bolt slot. Exp. gauge nomenclature. In CURB DETAIL & CROSS SEC. showed parapet. In Bill of Mat'l added bar 8. Quantity of Cl. X Conc. chgd. from 172.2 Cu. Yds. to 171.0 & Reinf. bars chgd. from 32,270 Lbs. to 32,920 Lbs.

PRINT DRIVER = I_PDF.E.B.dwl=f=g
PEN TABLE = DOT_VER82.tbl
PLOT SCALE = 1:1
FILE NAME = D:\78454-sht-rev03.dgn

ESCA CONSULTANTS, INC.

USER NAME = kjk	DESIGNED - KJK	REVISED -	
ESCA PROJECT NO. 1259.09	DRAWN - KJK	REVISED -	
PLOT SCALE = 0:2 '/ in.	CHECKED - ELH	REVISED -	
PLOT DATE = 12/11/2018 7:59:34 AM	DATE - 07/18	REVISED -	

STATE OF ILLINOIS
DEPARTMENT OF TRANSPORTATION

EXISTING BRIDGE PLANS
FOR INFORMATION ONLY

SCALE: NONE | SHEET NO. 2 OF 6 SHEETS | STA. | TO STA.

F.A.I. RTE.	SECTION	COUNTY	TOTAL SHEETS	SHEET NO.
57	(77-1-3)HB-2	PULASKI	92	74
		CONTRACT NO. 78454		
FED. ROAD DIST. NO.	ILLINOIS	FED. AID PROJECT		

STATE OF ILLINOIS
DEPARTMENT OF PUBLIC WORKS & BUILDINGS
DIVISION OF HIGHWAYS

* 77-1(3,HB-3,B-3,B-4)
16 (RS,BY)

ROUTE NO.	SECTION	COUNTY	TOTAL SHEETS	SHEET NO.
FAI 57 FAS 938	*	PULASKI	143	42
FED. ROAD DIST. NO. 7	ILLINOIS	FED. AID PROJECT-		

SHEET NO. 3
10 SHEETS

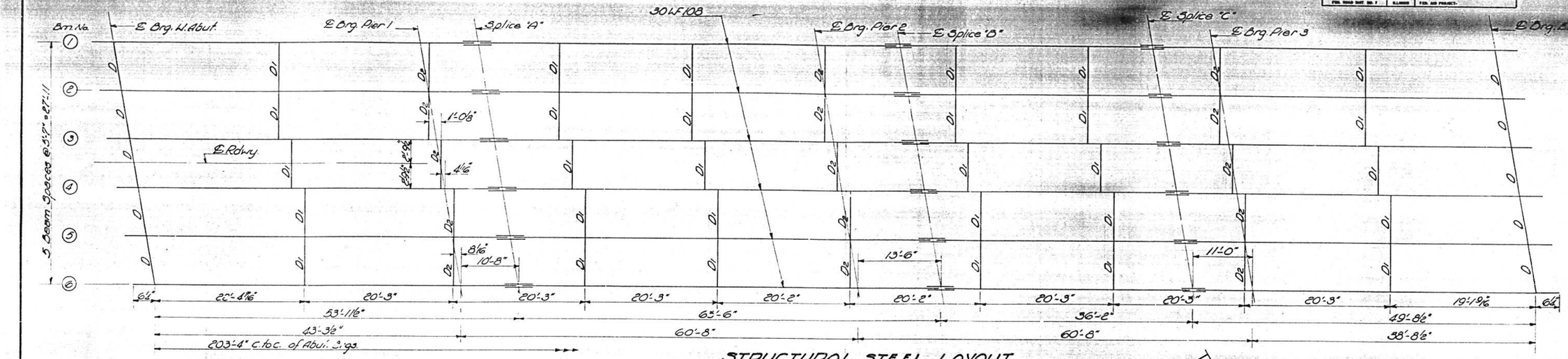

STRUCTURAL STEEL LAYOUT

ELEVATION TOP OF BEAMS

Bm. No.	W. Abut.	Pier 1	Spl. "A"	Pier 2	Spl. "B"	Spl. "C"	Pier 3	E. Abut.
1	362.852	361.942	361.865	361.357	361.220	360.741	360.581	359.985
2	362.349	362.039	361.962	361.454	361.317	360.838	360.671	360.082
3	362.399	362.089	362.012	361.504	361.367	360.888	360.721	360.132
4	362.396	362.086	362.009	361.501	361.364	360.885	360.718	360.129
5	362.339	362.029	361.952	361.444	361.307	360.828	360.661	360.072
6	362.236	361.926	361.849	361.341	361.204	360.725	360.558	359.968

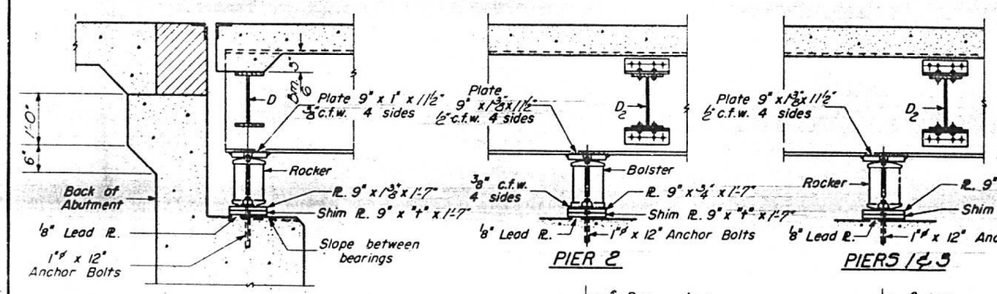

SECTION AT ABUTMENT

PIER 2

PIERS 1 & 3

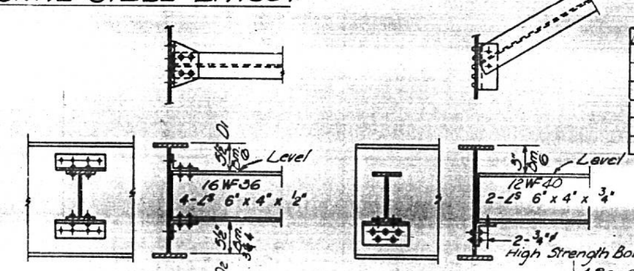

DIAPHRAGM D1 & D2
D1 - 30 Required
D2 - 15 Required

DIAPHRAGM D
D - 10 Required

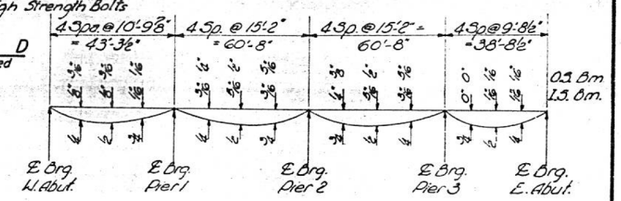

DEAD LOAD DEFLECTION DIAGRAM

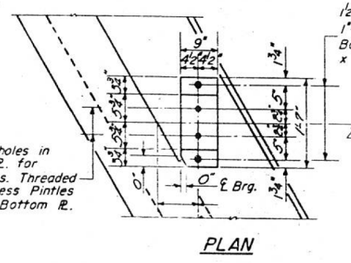

PLAN

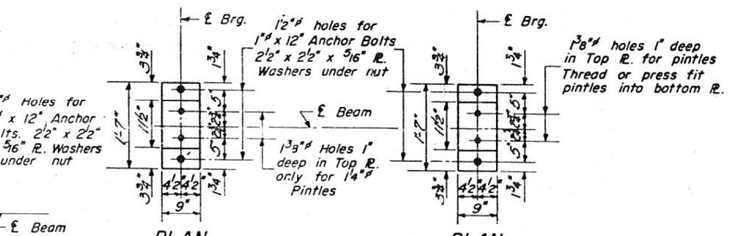

PLAN

PLAN

Bm. No.	All bearings
1	3/16
2	1/2"
3	3/16
4	3/16
5	3/8"
6	0"

"Y" DIMENSIONS

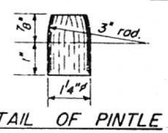

DETAIL OF PINTLE

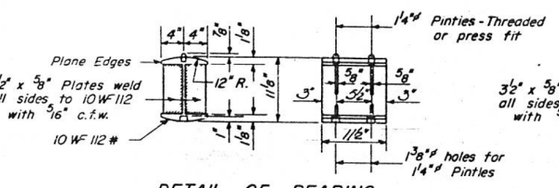

DETAIL OF BEARING AT PIERS 1, 3 & ABUTS.

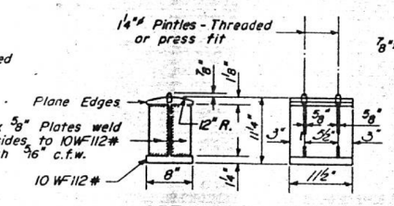

DETAIL OF BEARING AT PIER 2

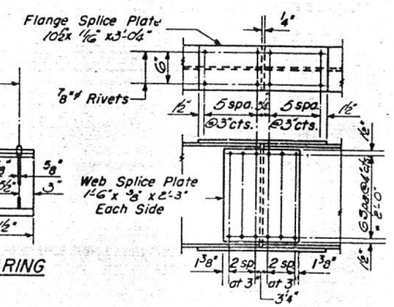

DETAIL OF SPLICE

DESIGNED	Robert T. Delaney	OCT 14 1960
CHECKED	Robert Gunder	EXAMINED — Engineer of Bridge and Traffic Structures
DRAWN	W. A. Sausaman R. Barraza	PASSED — Engineer of Design
CHECKED	RPM RG	APPROVED — Chief Highway Engineer

I-2-R Re-drawn 9-23-59

STRUCTURAL STEEL
F.A.I. RT. 57 SEC. 77-1HB-3
PULASKI COUNTY
STA. 227+71.9

ESCA CONSULTANTS, INC.

USER NAME = k.jk	DESIGNED - KJK	REVISED -	
ESCA PROJECT NO. 1259.09	DRAWN - KJK	REVISED -	
PLOT SCALE = 0:2 ':' / in.	CHECKED - ELH	REVISED -	
PLOT DATE = 12/11/2018 7:59:42 AM	DATE - 07/18	REVISED -	

STATE OF ILLINOIS
DEPARTMENT OF TRANSPORTATION

EXISTING BRIDGE PLANS
FOR INFORMATION ONLY

SCALE: NONE | SHEET NO. 3 OF 6 SHEETS | STA. | TO STA.

F.A.I. RTE.	SECTION	COUNTY	TOTAL SHEETS	SHEET NO.
57	(77-1-3)HB-2	PULASKI	92	75
		CONTRACT NO. 78454		
FED. ROAD DIST. NO.	ILLINOIS	FED. AID PROJECT		

PRINT DRIVER = LPD,E,B,B,Q,Ln1*G
PEN TABLE = IDOT_V8802.ctb
PLOT SCALE = 1.000 ' / in.
FILE NAME = D:\78454-sht-rev04.dgn

STATE OF ILLINOIS
DEPARTMENT OF PUBLIC WORKS & BUILDINGS
DIVISION OF HIGHWAYS

* 77-1(3,HB-3,B-3,B-4)
16(R3,BY)

ROUTE NO.	SECTION	COUNTY	TOTAL SHEETS	SHEET NO.
FAI 57 FAS 338	*	PULASKI	143	44

SHEET NO. 5 / 10 SHEETS

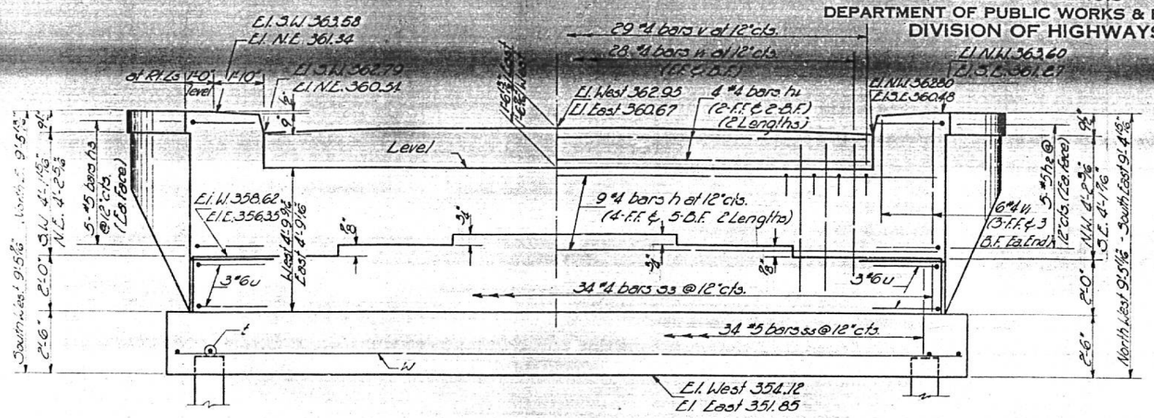

ELEVATION

At Right Angles to ℄ Rdwy. Symm. by Rot thru 180°

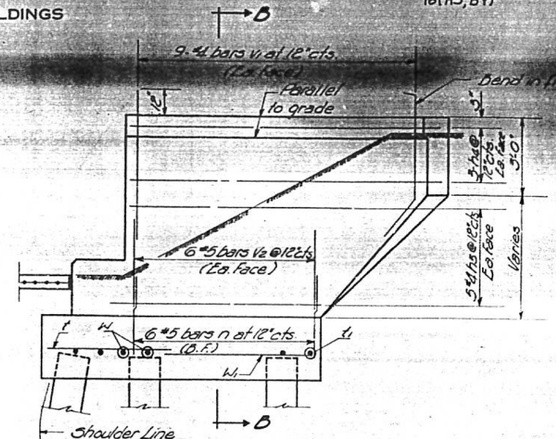

SIDE ELEVATION

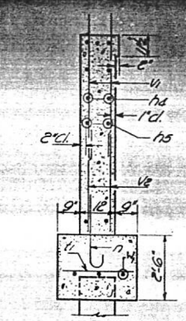

SECTION B-B

PILE DATA-WEST ABUT.
Capacity - 32 Tons
Est. Length - 50 Ft.
No. Required - 9

PILE DATA-EAST ABUT.
Capacity - 32 Tons
Est. Length - 50 Ft.
No. Required - 9
Includes 1 Test Pile

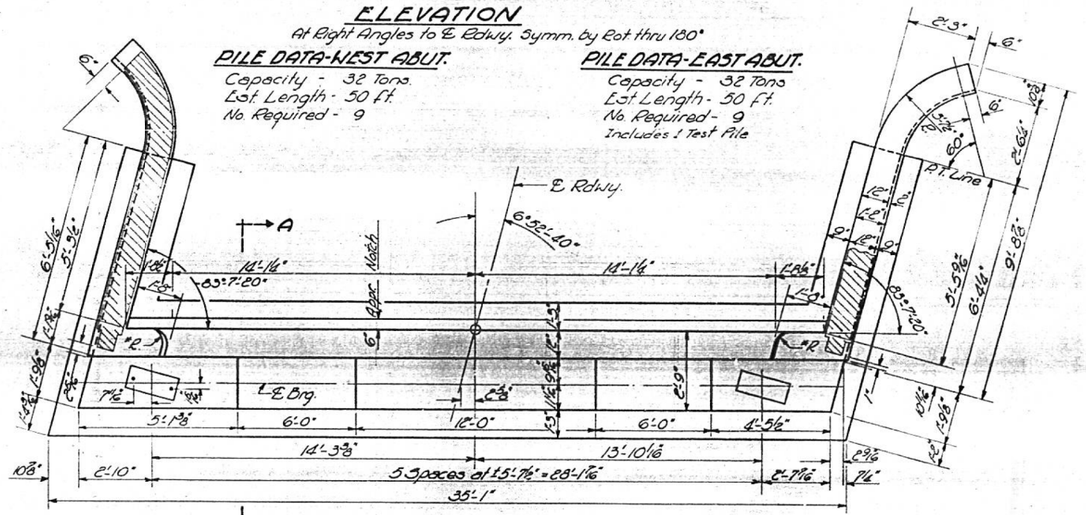

*Note: Contractor shall construct curb without radius when a curb & gutter are to be used on bridge approaches (See Road Plans)

PLAN OF ABUTMENT
Dimensions

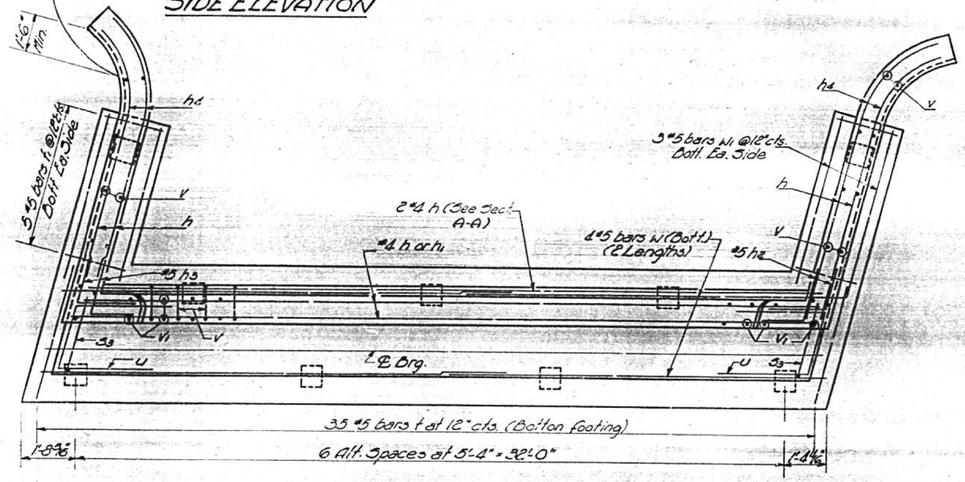

PLAN OF ABUTMENT
Reinforcement & Pile Spacing

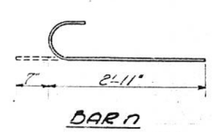

BAR n

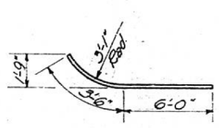

BAR h4

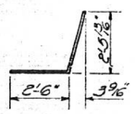

BAR h2

BAR v

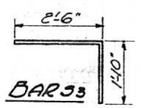

BAR s3

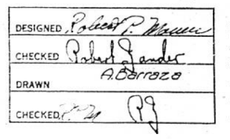

BAR s5

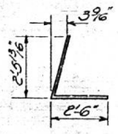

BAR h3

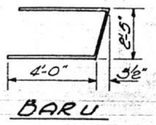

BAR u

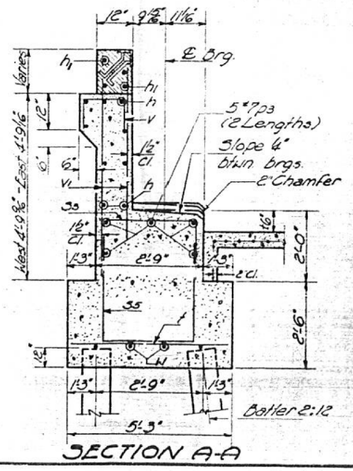

SECTION A-A

BILL OF REINFORCEMENT

Bar	No.	Size	Length	Shape	Bar	No.	Size	Length	Shape
h	36	#4	17'-9"		t	70	#5	5'-0"	
h1	16	#4	14'-3"		t1	20	#5	2'-0"	
h2	20	#5	5'-0"						
h3	20	#5	5'-0"		u	12	#6	10'-5"	
h4	24	#5	9'-6"						
h5	40	#4	6'-9"		v	58	#4	2'-9"	
					v1	208	#4	6'-0"	
n	24	#5	3'-6"		v2	48	#5	3'-3"	
p3	20	#7	13'-0"		w	16	#4	17'-9"	
					w1	12	#4	5'-0"	
s3	68	#4	4'-4"						
s5	68	#5	8'-4						

BILL OF MATERIAL

ITEM	Unit	Quant.
Class X Concrete	Cu. Yds.	71.7
Reinforcement Bars	Lbs.	4730
Concrete Piles	Lin. Ft.	850
Test Piles	Ea.	1

DESIGNED Robert P. Maurer
CHECKED Robert Sander
DRAWN A. Barraza
CHECKED

OCT 14 1960
EXAMINED W. E. Baumann — ENGINEER OF BRIDGE AND TRAFFIC STRUCTURES
PASSED E. L. Cronk — ENGINEER OF DESIGN
APPROVED R. R. Bartelsmeyer — CHIEF HIGHWAY ENGINEER

Revised 7/16/68 In ELEVATION and curb height from 11" to 9" dimensions at both side Elevations changed accordingly. In Sec. A-A showed tee wall at barr. In Bill of Mat'l Class X Conc. and Pile. 72.0 Cu. Yds.

ABUTMENTS
F.A.I. RT. 57 SEC. 77-1HB-3
PULASKI COUNTY
STA. 227+71.9

PRINT DRIVER = I_PD_E_B_Bw1o4.pc
PENT TABLE = IDOT_VERSE2.tbl
SCALE = 1:1 PLOT UNITS = inches
FILE NAME = D:\78454-abutments05.dgn

ESCA CONSULTANTS, INC.

USER NAME = kjk	DESIGNED - KJK	REVISED -	
ESCA PROJECT NO. 1259.09	DRAWN - KJK	REVISED -	
PLOT SCALE = 0:2 ' / in.	CHECKED - ELH	REVISED -	
PLOT DATE = 12/11/2018 7:59:51 AM	DATE - 07/18	REVISED -	

STATE OF ILLINOIS
DEPARTMENT OF TRANSPORTATION

EXISTING BRIDGE PLANS
FOR INFORMATION ONLY

SCALE: NONE | SHEET NO. 4 OF 6 SHEETS | STA. | TO STA.

F.A.I. RTE.	SECTION	COUNTY	TOTAL SHEETS	SHEET NO.
57	(77-1-3)HB-2	PULASKI	92	76

CONTRACT NO. 78454
FED. ROAD DIST. NO. | ILLINOIS | FED. AID PROJECT

STATE OF ILLINOIS
DEPARTMENT OF PUBLIC WORKS & BUILDINGS
DIVISION OF HIGHWAYS

ROUTE NO.	SECTION	COUNTY	TOTAL SHEETS	SHEET NO.
FAI 57 FAS 938	*	PULASKI	143	45
FED. ROAD DIST. NO. 7	ILLINOIS	FED. AID PROJECT		

SHEET NO 6
10 SHEETS

* 77-1(3,HB-3,B-3,B-4)
16 (RS,BY)

PILE DATA-PIER 1

Type	Creosoted Timber
Capacity	20 Ton.
Est. Length	35 ft.
No. Req'd.	18

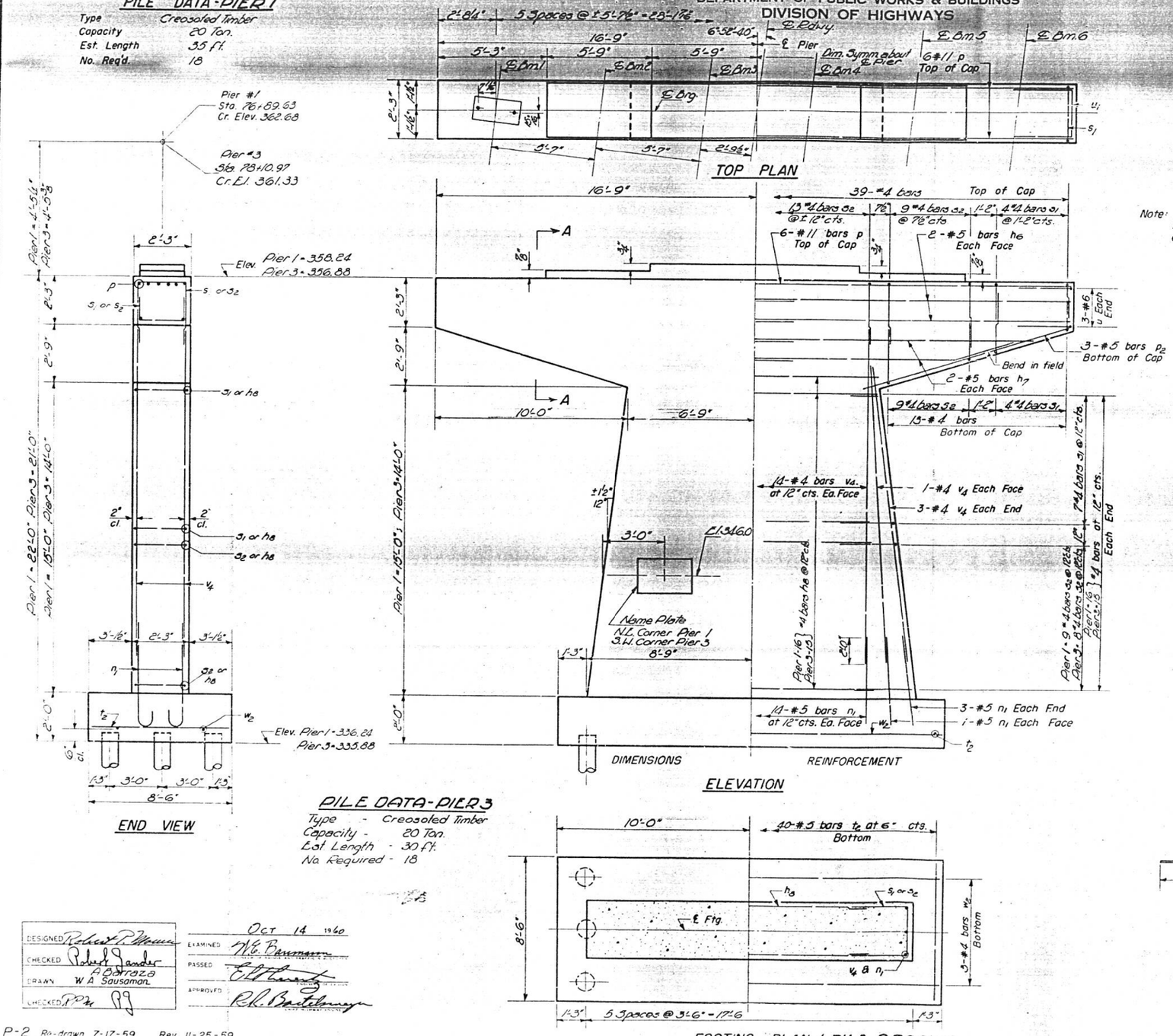

PILE DATA-PIER 3

Type -	Creosoted Timber
Capacity -	20 Ton.
Est. Length -	30 ft.
No. Required -	18

Note: All edges shall have standard ¾" chamfers except footings.

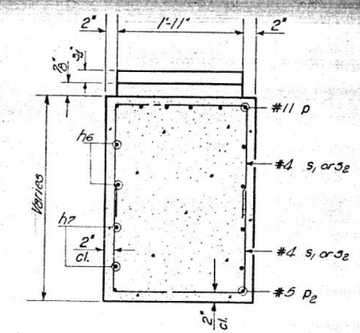

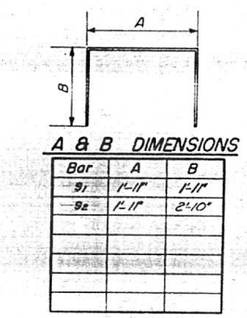

A & B DIMENSIONS

Bar	A	B
s_1	1'-11"	1'-11"
s_2	1'-11"	2'-10"

s BARS

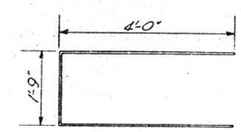

u_1 BAR

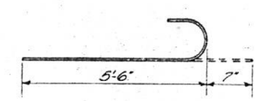

n_1 BAR

PIERS 1 & 3
BILL OF MATERIAL

Bar	No.	Size	Length	Shape
h_6	16	#5	17'-3"	—
h_7	16	#5	14'-6"	—
h_8	62	#4	13'-3"	—
n_1	76	#5	6'-1"	⊃
p	12	#11	33'-0"	—
p_2	12	#5	11'-3"	—
s_1	60	#4	5'-9"	⊓
s_2	132	#4	7'-7"	⊓
t_2	80	#5	8'-0"	—
u_1	12	#6	9'-9"	⊏
v_4	76	#4	16'-0"	—
w_2	6	#4	19'-6"	—
Class X Concrete			Cu. Yds.	85.8
Reinforcement Bars			Lbs.	6,440
Creosoted Piles			Lin. Ft.	1,170
Test Piles (Timber)			Ea.	1

DESIGNED	Robert P. Mann	EXAMINED	Oct 14 1960 W.E. Baumann
CHECKED	Robert Sander	PASSED	E.L. Marsh
DRAWN	A. Barroza W.A. Sausaman	APPROVED	R.R. Bartelsmeyer
CHECKED	RPM		

P-2 Re-drawn 7-17-59 Rev. 11-25-59

PIERS 1 & 3
F.A.I. RT. 57 SEC. 77-1HB-3
PULASKI COUNTY
STA. 227+71.9

PRINT DRIVER = I_PDF.B.Bahr.pt
PEN TABLE = IDOT_VERDOC.tbl
PAPER SIZE = 24.00 x 36.00 in
FILE NAME = D:\78454-sht-rev-ed05.dgn

ESCA CONSULTANTS, INC.

USER NAME = kjk	DESIGNED - KJK	REVISED -	
ESCA PROJECT NO. 1259.09	DRAWN - KJK	REVISED -	
PLOT SCALE = 0:2 ':' / in.	CHECKED - ELH	REVISED -	
PLOT DATE = 12/11/2018 8:00:00 AM	DATE - 07/18	REVISED -	

STATE OF ILLINOIS
DEPARTMENT OF TRANSPORTATION

EXISTING BRIDGE PLANS FOR INFORMATION ONLY

SCALE: NONE | SHEET NO. 5 OF 6 SHEETS | STA. | TO STA.

F.A.I. RTE.	SECTION	COUNTY	TOTAL SHEETS	SHEET NO.
57	(77-1-3)HB-2	PULASKI	92	77
		CONTRACT NO. 78454		
FED. ROAD DIST. NO.	ILLINOIS	FED. AID PROJECT		

STATE OF ILLINOIS
DEPARTMENT OF PUBLIC WORKS & BUILDINGS
DIVISION OF HIGHWAYS

ROUTE NO.	SECTION	COUNTY	TOTAL SHEETS	SHEET NO.
FAI 57 / FAS 338	*	PULASKI	143	46
FED. ROAD DIST. NO. 7	ILLINOIS	FED. AID PROJECT		

SHEET NO. 7
10 SHEETS

* 77-1(3)HB-3, B-3, B-4)
(C-15, D-1)

PILE DATA

Type - Creosoted Timber
Capacity - 20 Ton.
Est. Length - 30 Ft.
No. Req'd. - 21

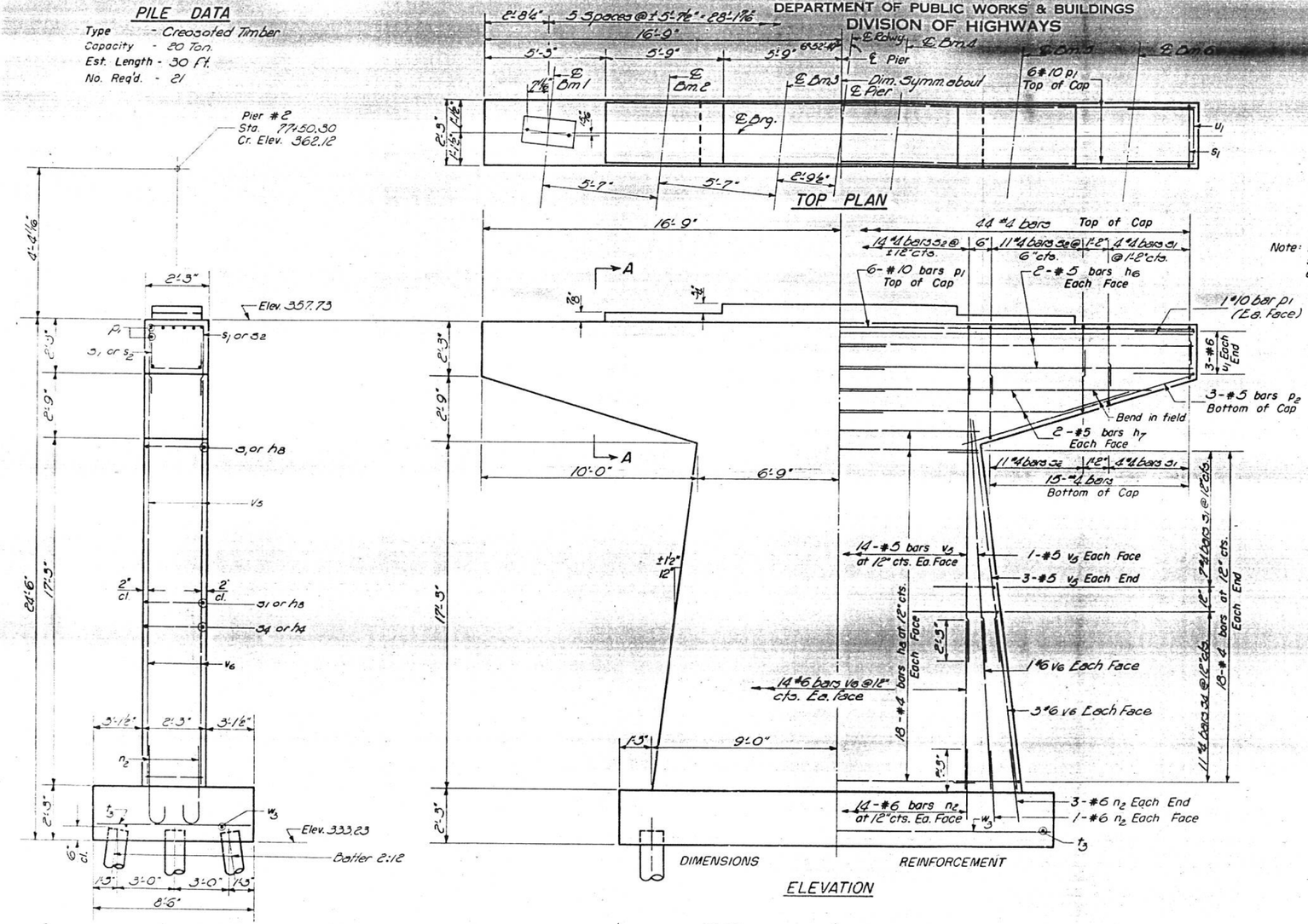

Note: All edges shall have standard ¾" chamfers except footings.

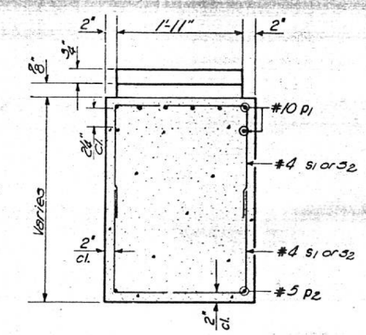

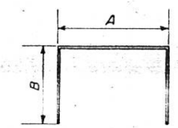

A & B DIMENSIONS

Bar	A	B
s1	1'-11"	1'-11"
s2	1'-11"	2'-10"
s4	1'-11"	3'-3"

s BARS

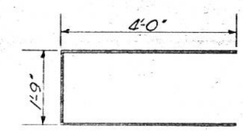

u1 BAR

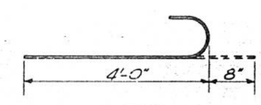

n1 BAR

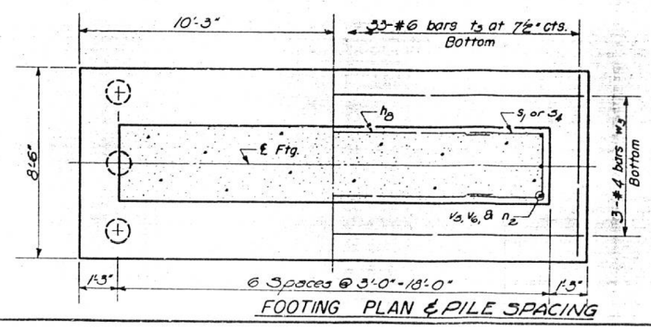

PIER 2
BILL OF MATERIAL

Bar	No.	Size	Length	Shape
h6	8	#5	17'-3"	—
h7	8	#5	14'-6"	—
h8	36	#4	13'-3"	—
n2	38	#6	4'-8"	⊃
p1	8	#10	33'-0"	—
p2	6	#5	11'-3"	—
s1	30	#4	5'-9"	∩
s2	58	#4	7'-7"	∩
s4	22	#4	8'-3"	∩
t3	33	#6	8'-0"	—
u1	6	#6	9'-9"	⊏
v5	38	#5	15'-0"	—
v6	38	#6	8'-0"	
w3	3	#4	20'-0"	—
Class X Concrete			Cu.Yds.	48.7
Reinforcement Bars			Lbs.	4160
Creosoted Piles			Lin.Ft.	630
Test Piles (Timber)			Ea.	1

DESIGNED Robert P. Bauman
CHECKED Robert Sanders
DRAWN W. A. Sousomon / A. Barraza
CHECKED A. Filek

EXAMINED W. E. Bauman — OCT 14 1960
PASSED E. Schmidt
APPROVED R. A. Bartelsmeyer

P-2 Re-drawn 7-17-59 Rev. 11-25-59

PIER 2
F.A.I. RT. 57 SEC. 77-1HB-3
PULASKI COUNTY
STA. 227+71.9

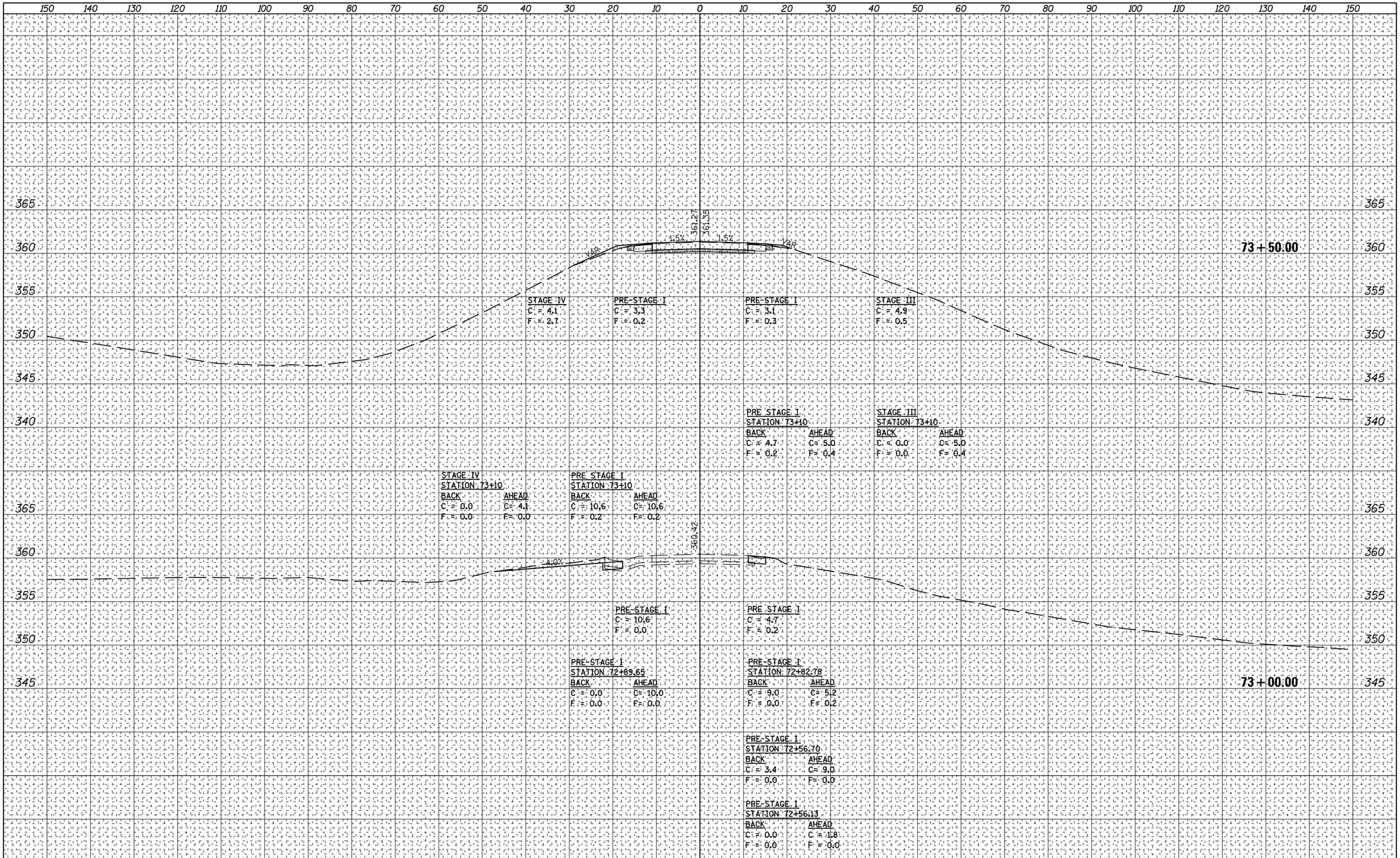

FINAL SURVEY	BY	DATE
SURVEYED		
PLOTTED		
TEMPLATE		
AREAS		
AREAS CHECKED		
NOTE BOOK NO.		

ORIGINAL SURVEY	BY	DATE
SURVEYED		
PLOTTED		
TEMPLATE		
AREAS		
AREAS CHECKED		
NOTE BOOK NO.		

ESCA CONSULTANTS, INC.
CIVIL & STRUCTURAL ENGINEERS

USER NAME = k.jk	DESIGNED - JHM	REVISED -	
ESCA PROJECT NO. 1259.09	DRAWN - JHM	REVISED -	
PLOT SCALE = 20.0000 ' / in.	CHECKED - JMS	REVISED -	
PLOT DATE = 12/11/2018	DATE - 08/18	REVISED -	

STATE OF ILLINOIS
DEPARTMENT OF TRANSPORTATION

FAS 938 (CH 7) CROSS SECTIONS

SCALE: AS SHOWN | SHEET 1 OF 9 SHEETS | STA. 73+00.00 TO STA. 73+50.00

F.A.I. RTE.	SECTION	COUNTY	TOTAL SHEETS	SHEET NO.
57	(77-1-3)HB-2	PULASKI	92	79

CONTRACT NO. 78454

ILLINOIS FED. AID PROJECT

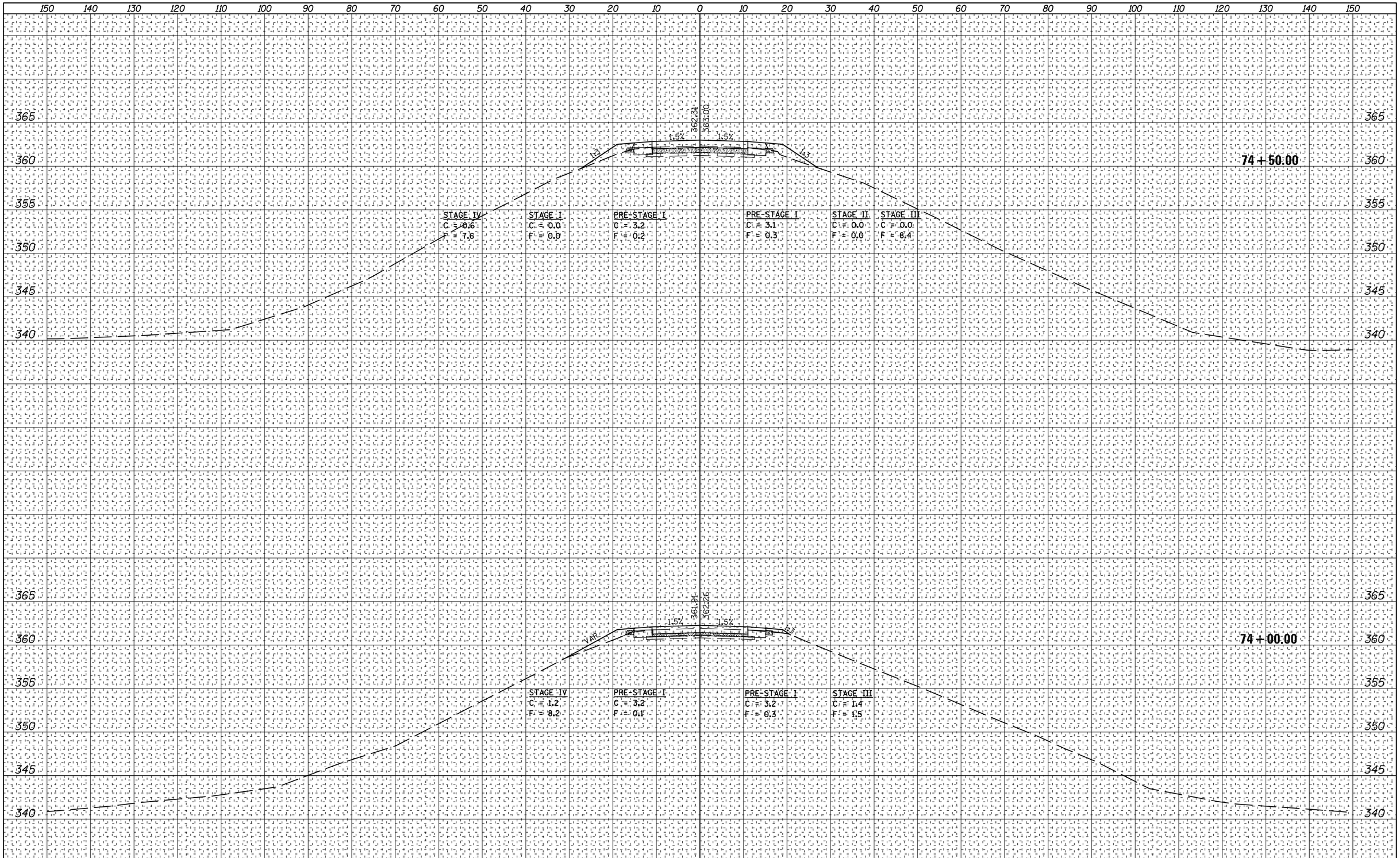

FINAL SURVEY		BY	DATE
NOTE BOOK	SURVEYED		
	PLOTTED		
	TEMPLATE		
	AREAS		
NO.	AREAS CHECKED		

ORIGINAL SURVEY		BY	DATE
NOTE BOOK	SURVEYED		
	PLOTTED		
	TEMPLATE		
	AREAS		
NO.	AREAS CHECKED		

ESCA CONSULTANTS, INC.
CIVIL & STRUCTURAL ENGINEERS

USER NAME = k.jk	DESIGNED - JHM	REVISED -	
ESCA PROJECT NO. 1259.09	DRAWN - JHM	REVISED -	
PLOT SCALE = 20.0000 ' / in.	CHECKED - JMS	REVISED -	
PLOT DATE = 12/11/2018	DATE - 08/18	REVISED -	

STATE OF ILLINOIS
DEPARTMENT OF TRANSPORTATION

FAS 938 (CH 7) CROSS SECTIONS

SCALE: AS SHOWN | SHEET 2 OF 9 SHEETS | STA. 74+00.00 TO STA. 74+50.00

F.A.I. RTE.	SECTION	COUNTY	TOTAL SHEETS	SHEET NO.
57	(77-1-3)HB-2	PULASKI	92	80

CONTRACT NO. 78454

ILLINOIS FED. AID PROJECT

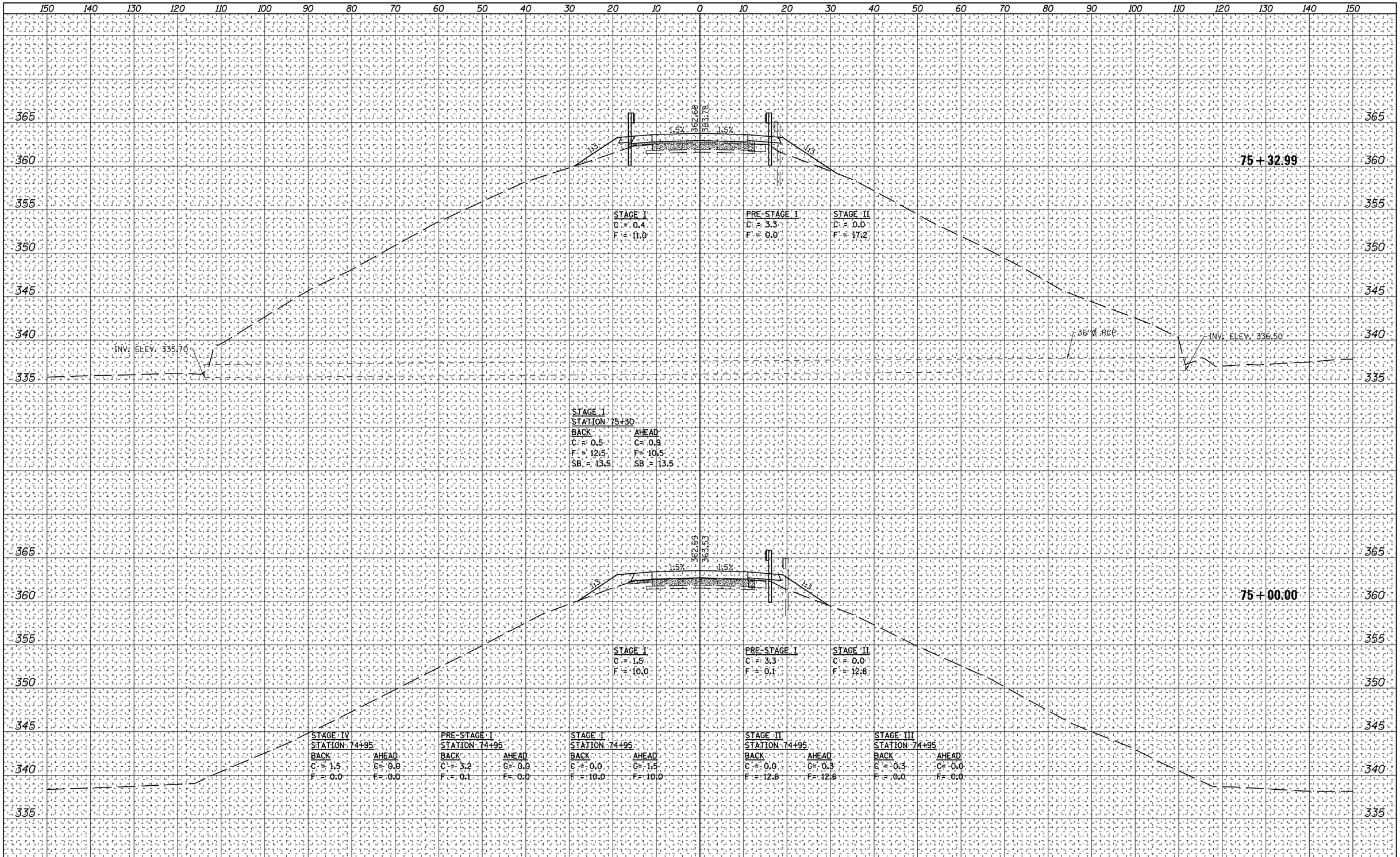

FINAL SURVEY	BY	DATE
SURVEYED		
PLOTTED		
TEMPLATE		
AREAS		
AREAS CHECKED		
NOTE BOOK		
NO.		

ORIGINAL SURVEY	BY	DATE
SURVEYED		
PLOTTED		
TEMPLATE		
AREAS		
AREAS CHECKED		
NOTE BOOK		
NO.		

ESCA CONSULTANTS, INC.
CIVIL & STRUCTURAL ENGINEERS

USER NAME = k.jk	DESIGNED - JHM	REVISED -	
ESCA PROJECT NO. 1259.09	DRAWN - JHM	REVISED -	
PLOT SCALE = 20.0000 ' / in.	CHECKED - JMS	REVISED -	
PLOT DATE = 12/11/2018	DATE - 08/18	REVISED -	

STATE OF ILLINOIS
DEPARTMENT OF TRANSPORTATION

FAS 938 (CH 7) CROSS SECTIONS

SCALE: AS SHOWN | SHEET 3 OF 9 SHEETS | STA. 75+00.00 TO STA. 75+32.99

F.A.I. RTE.	SECTION	COUNTY	TOTAL SHEETS	SHEET NO.
57	(77-1-3)HB-2	PULASKI	92	81

CONTRACT NO. 78454

ILLINOIS FED. AID PROJECT

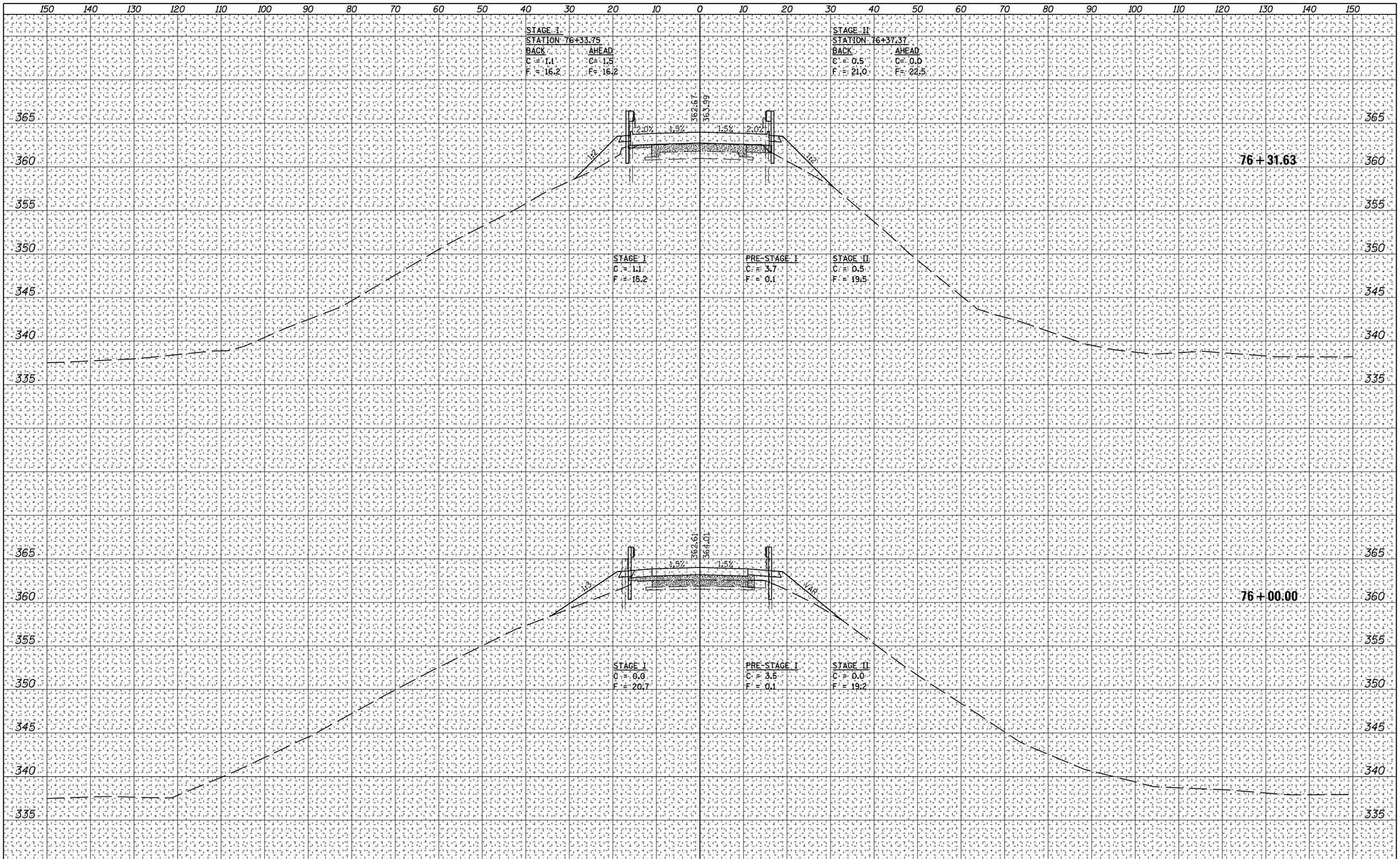

FINAL SURVEY	BY	DATE
SURVEYED		
PLOTTED		
TEMPLATE		
AREAS		
AREAS CHECKED		
NOTE BOOK NO.		

ORIGINAL SURVEY	BY	DATE
SURVEYED		
PLOTTED		
TEMPLATE		
AREAS		
AREAS CHECKED		
NOTE BOOK NO.		

ESCA CONSULTANTS, INC.
CIVIL & STRUCTURAL ENGINEERS

USER NAME = k.jk	DESIGNED - JHM	REVISED -	
ESCA PROJECT NO. 1259.09	DRAWN - JHM	REVISED -	
PLOT SCALE = 20.0000 ' / in.	CHECKED - JMS	REVISED -	
PLOT DATE = 12/11/2018	DATE - 08/18	REVISED -	

STATE OF ILLINOIS
DEPARTMENT OF TRANSPORTATION

FAS 938 (CH 7) CROSS SECTIONS

SCALE: AS SHOWN | SHEET 4 OF 9 SHEETS | STA. 76+00.00 TO STA. 76+31.63

F.A.I. RTE.	SECTION	COUNTY	TOTAL SHEETS	SHEET NO.
57	(77-1-3)HB-2	PULASKI	92	82

CONTRACT NO. 78454

ILLINOIS FED. AID PROJECT

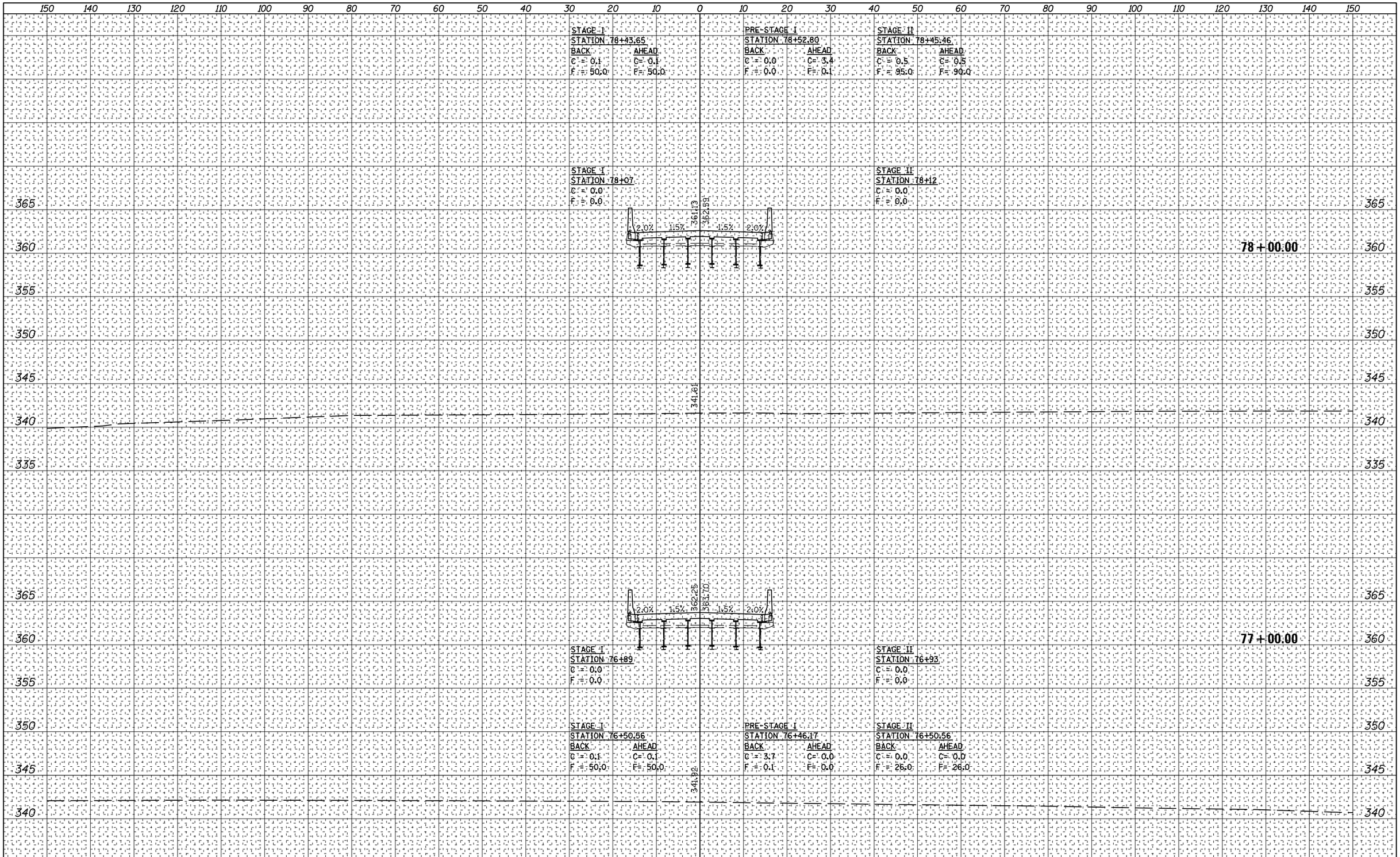

FINAL SURVEY		BY	DATE
NOTE BOOK	SURVEYED		
	PLOTTED		
	TEMPLATE		
	AREAS		
NO.	AREAS CHECKED		

ORIGINAL SURVEY		BY	DATE
NOTE BOOK	SURVEYED		
	PLOTTED		
	TEMPLATE		
	AREAS		
NO.	AREAS CHECKED		

ESCA CONSULTANTS, INC.
CIVIL & STRUCTURAL ENGINEERS

USER NAME = k.jk	DESIGNED - JHM	REVISED -	
ESCA PROJECT NO. 1259.09	DRAWN - JHM	REVISED -	
PLOT SCALE = 20.0000 ' / in.	CHECKED - JMS	REVISED -	
PLOT DATE = 12/11/2018	DATE - 08/18	REVISED -	

STATE OF ILLINOIS
DEPARTMENT OF TRANSPORTATION

FAS 938 (CH 7) CROSS SECTIONS

SCALE: AS SHOWN | SHEET 5 OF 9 SHEETS | STA. 77+00.00 TO STA. 78+00.00

F.A.I. RTE.	SECTION	COUNTY	TOTAL SHEETS	SHEET NO.
57	(77-1-3)HB-2	PULASKI	92	83

CONTRACT NO. 78454

ILLINOIS FED. AID PROJECT

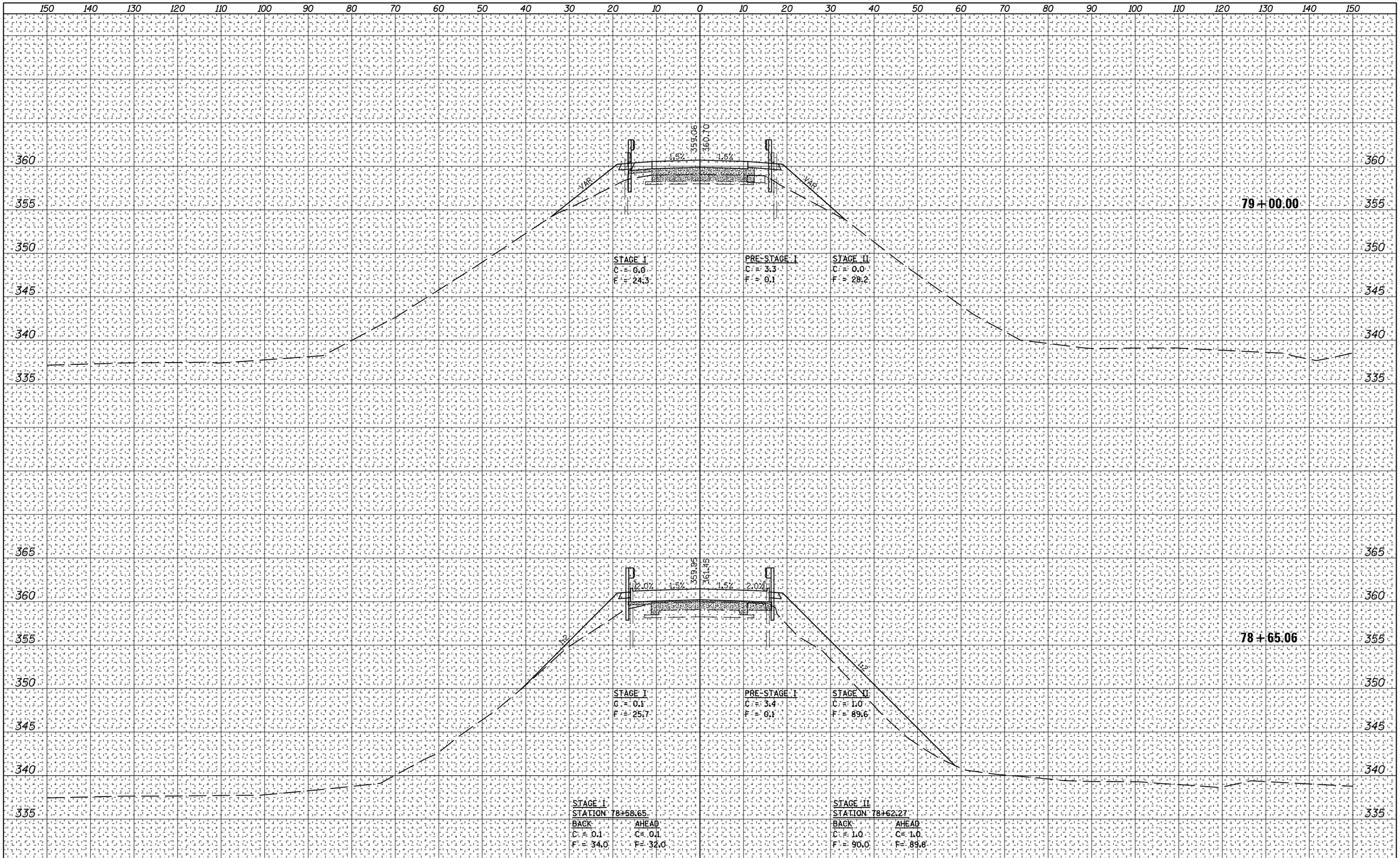

FINAL SURVEY		BY	DATE
NOTE BOOK	SURVEYED		
	PLOTTED		
	TEMPLATE		
	AREAS		
NO.	AREAS CHECKED		

ORIGINAL SURVEY		BY	DATE
NOTE BOOK	SURVEYED		
	PLOTTED		
	TEMPLATE		
	AREAS		
NO.	AREAS CHECKED		

ESCA CONSULTANTS, INC.
CIVIL & STRUCTURAL ENGINEERS

USER NAME = k.jk	DESIGNED - JHM	REVISED -	
ESCA PROJECT NO. 1259.09	DRAWN - JHM	REVISED -	
PLOT SCALE = 20.0000 ' / in.	CHECKED - JMS	REVISED -	
PLOT DATE = 12/11/2018	DATE - 08/18	REVISED -	

STATE OF ILLINOIS
DEPARTMENT OF TRANSPORTATION

FAS 938 (CH 7) CROSS SECTIONS

SCALE: AS SHOWN | SHEET 6 OF 9 SHEETS | STA. 78+65.06 TO STA. 79+00.00

F.A.I. RTE.	SECTION	COUNTY	TOTAL SHEETS	SHEET NO.
57	(77-1-3)HB-2	PULASKI	92	84

CONTRACT NO. 78454

ILLINOIS FED. AID PROJECT

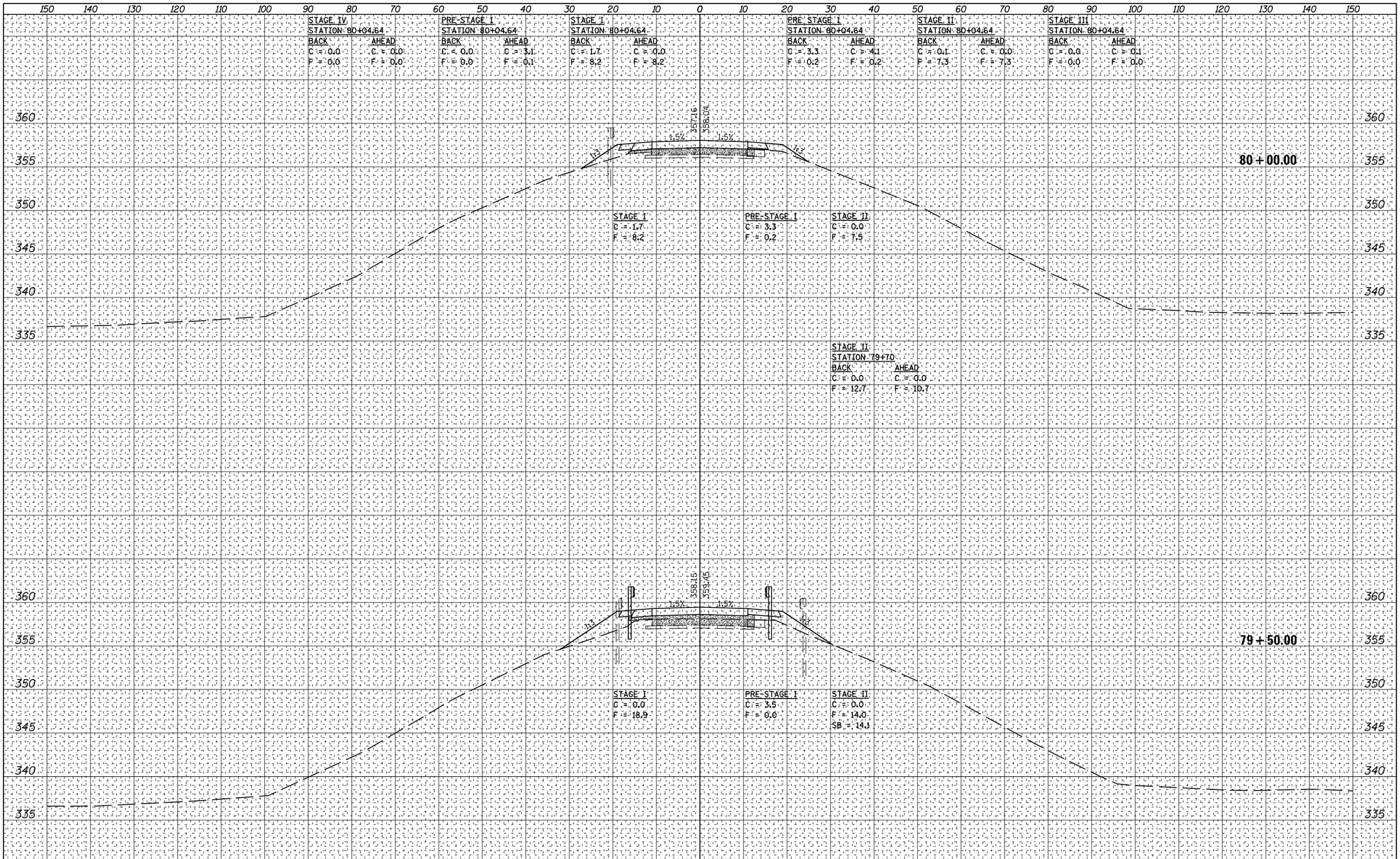

FINAL SURVEY	BY	DATE
SURVEYED		
PLOTTED		
TEMPLATE		
AREAS		
AREAS CHECKED		
NOTE BOOK NO.		

ORIGINAL SURVEY	BY	DATE
SURVEYED		
PLOTTED		
TEMPLATE		
AREAS		
AREAS CHECKED		
NOTE BOOK NO.		

ESCA CONSULTANTS, INC.
CIVIL & STRUCTURAL ENGINEERS

USER NAME = k.jk	DESIGNED - JHM	REVISED -	
ESCA PROJECT NO. 1259.09	DRAWN - JHM	REVISED -	
PLOT SCALE = 20.0000 ' / in.	CHECKED - JMS	REVISED -	
PLOT DATE = 12/11/2018	DATE - 08/18	REVISED -	

STATE OF ILLINOIS
DEPARTMENT OF TRANSPORTATION

FAS 938 (CH 7) CROSS SECTIONS

SCALE: AS SHOWN | SHEET 7 OF 9 SHEETS | STA. 79+50.00 TO STA. 80+00.00

F.A.I. RTE.	SECTION	COUNTY	TOTAL SHEETS	SHEET NO.
57	(77-1-3)HB-2	PULASKI	92	85

CONTRACT NO. 78454

ILLINOIS FED. AID PROJECT

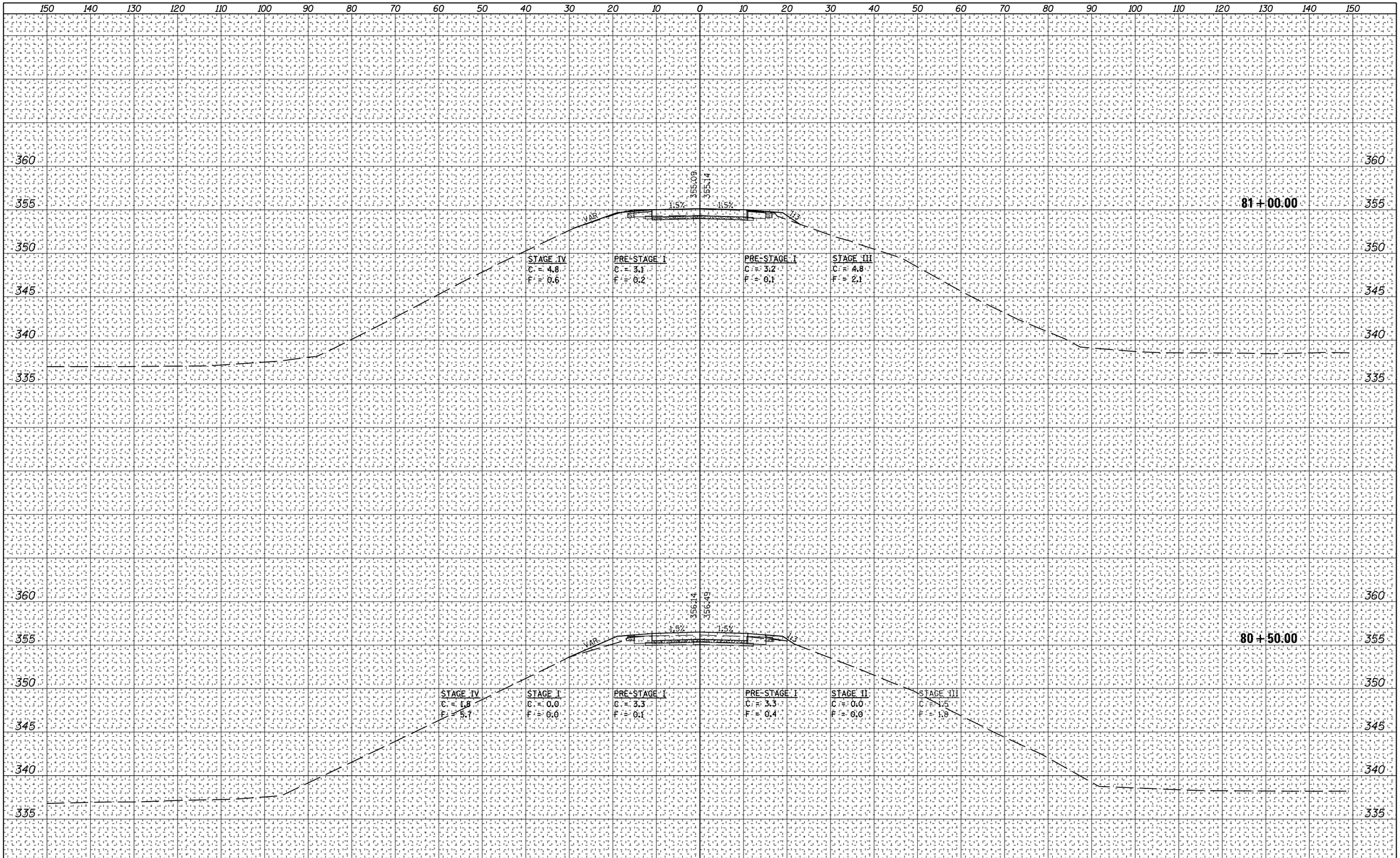

FINAL SURVEY		BY	DATE
NOTE BOOK	SURVEYED		
	PLOTTED		
	TEMPLATE		
	AREAS		
NO.	AREAS CHECKED		

ORIGINAL SURVEY		BY	DATE
NOTE BOOK	SURVEYED		
	PLOTTED		
	TEMPLATE		
	AREAS		
NO.	AREAS CHECKED		

ESCA CONSULTANTS, INC.
CIVIL & STRUCTURAL ENGINEERS

USER NAME = k.jk	DESIGNED - JHM	REVISED -	
ESCA PROJECT NO. 1259.09	DRAWN - JHM	REVISED -	
PLOT SCALE = 20.0000 ' / in.	CHECKED - JMS	REVISED -	
PLOT DATE = 12/11/2018	DATE - 08/18	REVISED -	

STATE OF ILLINOIS
DEPARTMENT OF TRANSPORTATION

FAS 938 (CH 7) CROSS SECTIONS

SCALE: AS SHOWN | SHEET 8 OF 9 SHEETS | STA. 80+50.00 TO STA. 81+00.00

F.A.I. RTE.	SECTION	COUNTY	TOTAL SHEETS	SHEET NO.
57	(77-1-3)HB-2	PULASKI	92	86
		CONTRACT NO. 78454		
		ILLINOIS FED. AID PROJECT		

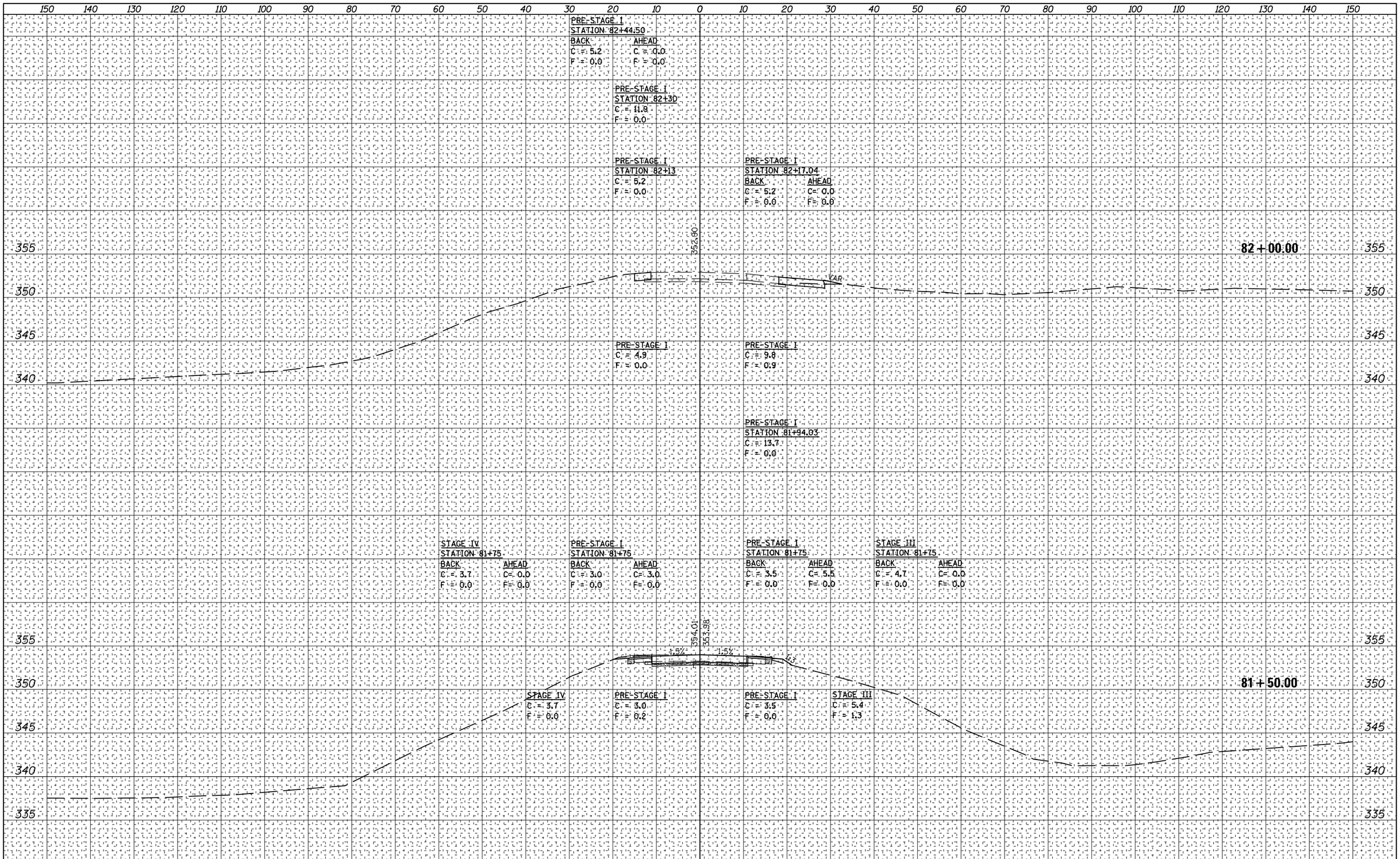

FINAL SURVEY	BY	DATE
SURVEYED		
PLOTTED		
TEMPLATE		
AREAS		
AREAS CHECKED		
NOTE BOOK NO.		

ORIGINAL SURVEY	BY	DATE
SURVEYED		
PLOTTED		
TEMPLATE		
AREAS		
AREAS CHECKED		
NOTE BOOK NO.		

ESCA CONSULTANTS, INC.
CIVIL & STRUCTURAL ENGINEERS

USER NAME = k.jk	DESIGNED - JHM	REVISED -	
ESCA PROJECT NO. 1259.09	DRAWN - JHM	REVISED -	
PLOT SCALE = 20.0000 ' / in.	CHECKED - JMS	REVISED -	
PLOT DATE = 12/11/2018	DATE - 08/18	REVISED -	

STATE OF ILLINOIS
DEPARTMENT OF TRANSPORTATION

FAS 938 (CH 7) CROSS SECTIONS

SCALE: AS SHOWN | SHEET 9 OF 9 SHEETS | STA. 81+50.00 TO STA. 82+00.00

F.A.I. RTE.	SECTION	COUNTY	TOTAL SHEETS	SHEET NO.
57	(77-1-3)HB-2	PULASKI	92	87

CONTRACT NO. 78454

ILLINOIS FED. AID PROJECT

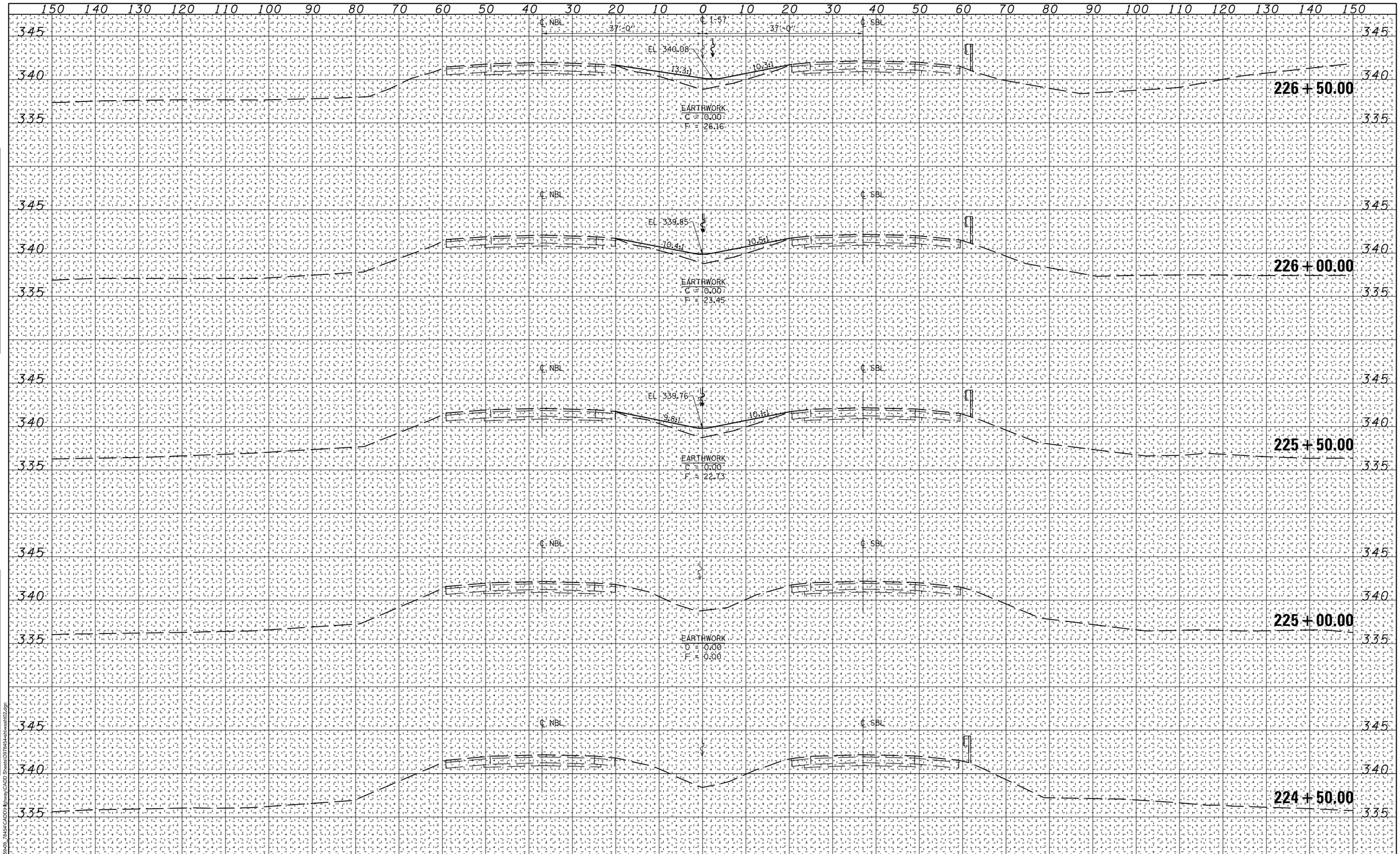

FINAL SURVEY		BY	DATE
NOTE BOOK	SURVEYED		
	PLOTTED		
	TEMPLATE		
	AREAS		
NO.	AREAS CHECKED		

ORIGINAL SURVEY		BY	DATE
NOTE BOOK	SURVEYED		
	PLOTTED		
	TEMPLATE		
	AREAS		
NO.	AREAS CHECKED		

MODEL: Default
FILE NAME: Y:\DOT\1259x09_78454\CADD\Highway\CADD Sheets\D978454-sht-xsst1102.dgn

ESCA CONSULTANTS, INC.
ROAD & STRUCTURE DESIGNERS

USER NAME = kjk	DESIGNED - KJK	REVISED -	
SCALES: (HORIZ) 1"=50' (VERT) 1"=5'	DRAWN - KJK	REVISED -	
PLOT SCALE = 20.0000 ' / in.	CHECKED - JMS	REVISED -	
PLOT DATE = 12/11/2018	DATE - 11/18	REVISED -	

STATE OF ILLINOIS
DEPARTMENT OF TRANSPORTATION

FAI 57 (I-57) CROSS SECTIONS

SCALE: AS SHOWN | SHEET 1 OF 5 SHEETS | STA. 224+50.00 TO STA. 226+50.00

F.A.I. RTE.	SECTION	COUNTY	TOTAL SHEETS	SHEET NO.
57	(77-1-3)HB-2	PULASKI	92	88

CONTRACT NO. 78454

ILLINOIS | FED. AID PROJECT AID

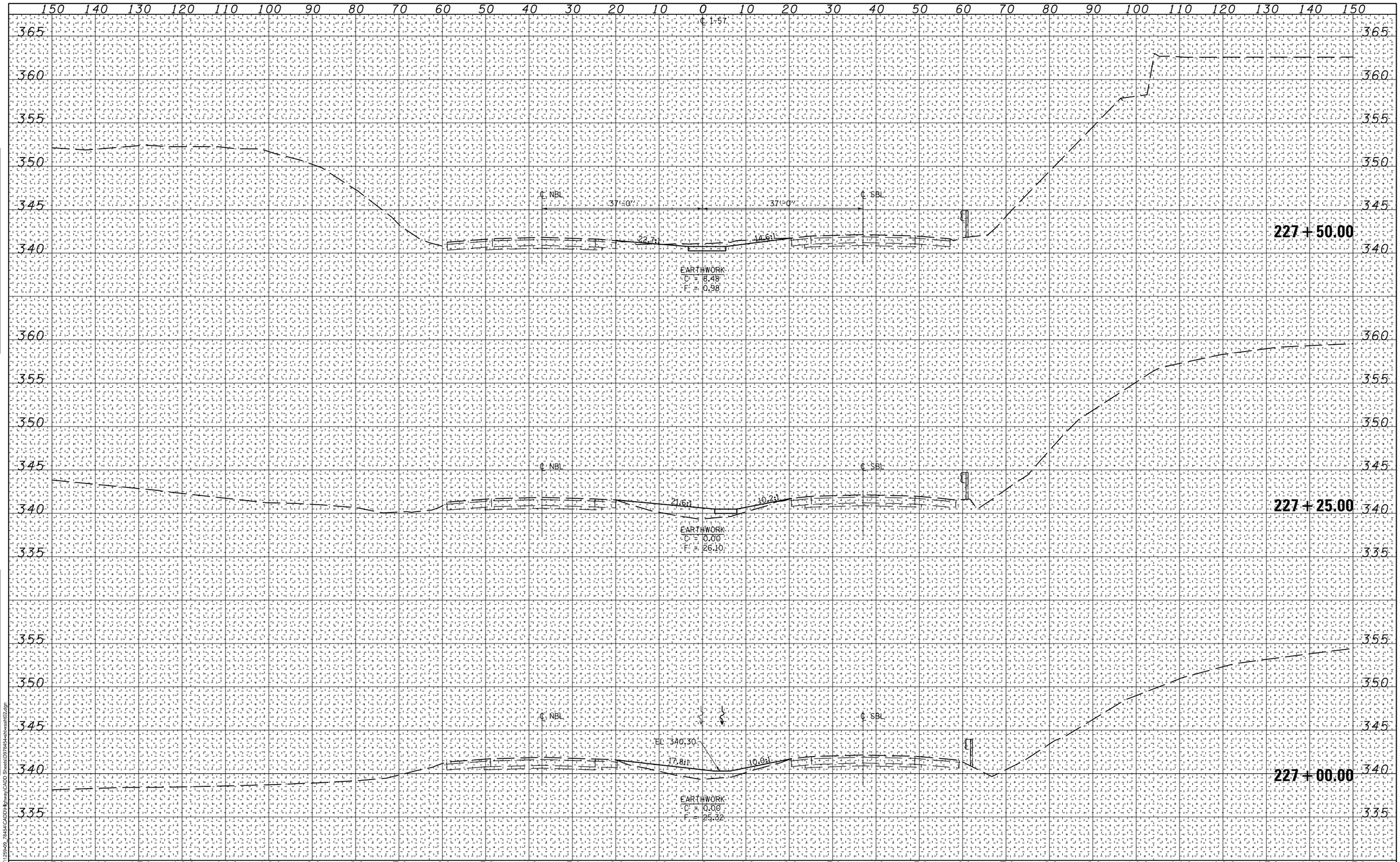

FINAL SURVEY		BY	DATE
	SURVEYED		
	PLOTTED		
	TEMPLATE		
NOTE BOOK	AREAS		
	AREAS CHECKED		
NO.			

ORIGINAL SURVEY		BY	DATE
	SURVEYED		
	PLOTTED		
	TEMPLATE		
NOTE BOOK	AREAS		
	AREAS CHECKED		
NO.			

MODEL: Default
FILE NAME: Y:\DOT\1259-09_78454\CADD\Highway\CADD Sheets\0078454-sht-xsst102.dgn

ESCA CONSULTANTS, INC.
CIVIL & STRUCTURAL ENGINEERS

USER NAME = kjk	DESIGNED - KJK	REVISED -	
SCALES: (HORIZ) 1"=50' (VERT) 1"=5'	DRAWN - KJK	REVISED -	
PLOT SCALE = 20.0000 ' / in.	CHECKED - JMS	REVISED -	
PLOT DATE = 12/11/2018	DATE - 11/18	REVISED -	

STATE OF ILLINOIS
DEPARTMENT OF TRANSPORTATION

FAI 57 (I-57) CROSS SECTIONS

SCALE: AS SHOWN | SHEET 2 OF 5 SHEETS | STA. 227+00.00 TO STA. 227+50.00

F.A.I. RTE.	SECTION	COUNTY	TOTAL SHEETS	SHEET NO.
57	(77-1-3)HB-2	PULASKI	92	89

CONTRACT NO. 78454

ILLINOIS | FED. AID PROJECT AID

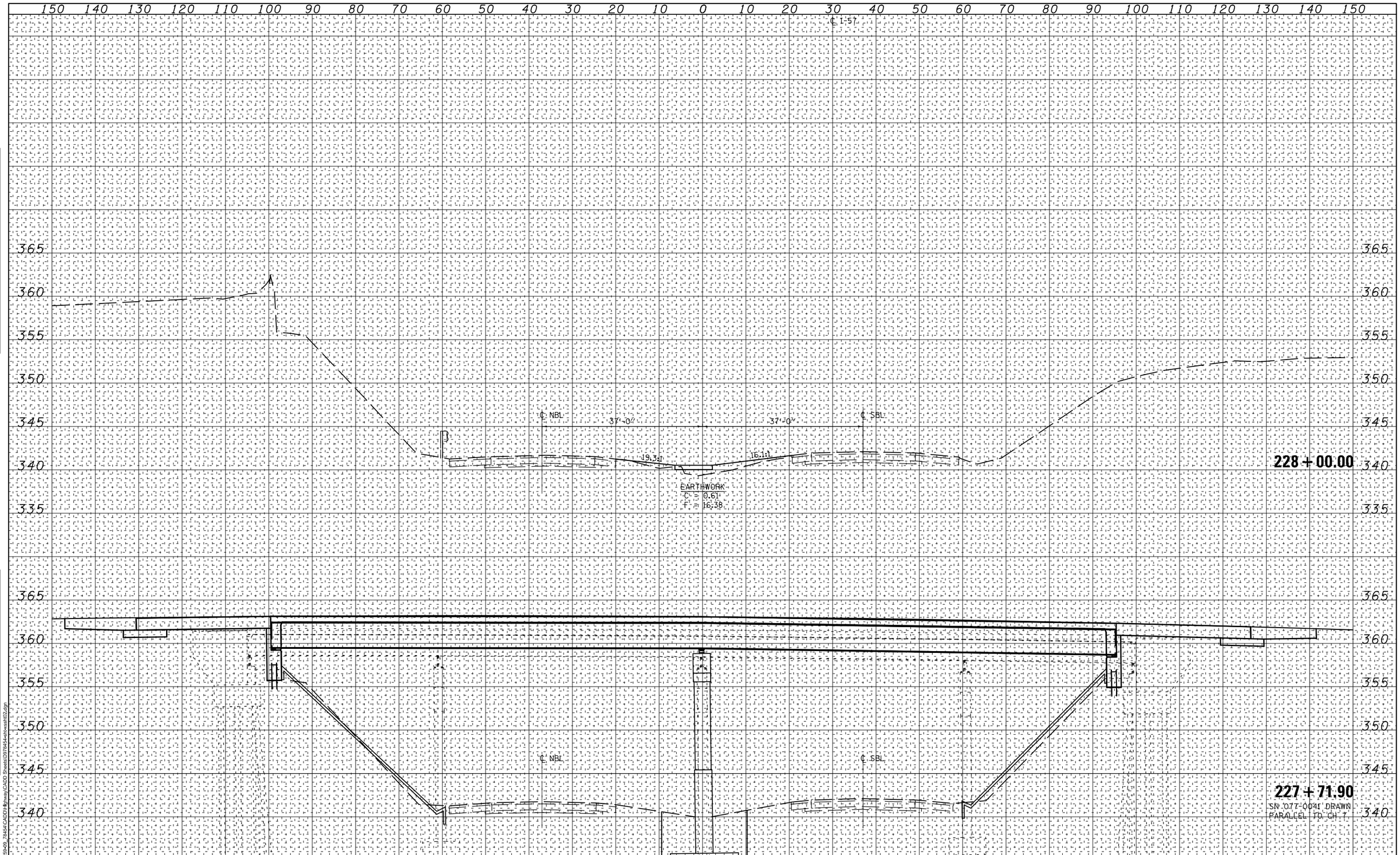

FINAL SURVEY		BY	DATE
NOTE BOOK	SURVEYED		
	PLOTTED		
	TEMPLATE		
	AREAS		
	AREAS CHECKED		
NO.			

ORIGINAL SURVEY		BY	DATE
NOTE BOOK	SURVEYED		
	PLOTTED		
	TEMPLATE		
	AREAS		
	AREAS CHECKED		
NO.			

MODEL: Default
FILE NAME: Y:\DOT\1259x09_78454\CADD\Highway\CADD Sheets\0978454-sht-xssht02.dgn

ESCA CONSULTANTS, INC.
CIVIL & STRUCTURAL ENGINEERS

USER NAME = kjk	DESIGNED - KJK	REVISED -	
SCALES: (HORIZ) 1"=50' (VERT) 1"=5'	DRAWN - KJK	REVISED -	
PLOT SCALE = 20.0000 ' / in.	CHECKED - JMS	REVISED -	
PLOT DATE = 12/11/2018	DATE - 11/18	REVISED -	

STATE OF ILLINOIS
DEPARTMENT OF TRANSPORTATION

FAI 57 (I-57) CROSS SECTIONS

SCALE: AS SHOWN | SHEET 3 OF 5 SHEETS | STA. 227+71.90 TO STA. 228+00.00

F.A.I. RTE.	SECTION	COUNTY	TOTAL SHEETS	SHEET NO.
57	(77-1-3)HB-2	PULASKI	92	90
		CONTRACT NO. 78454		
		ILLINOIS FED. AID PROJECT AID		

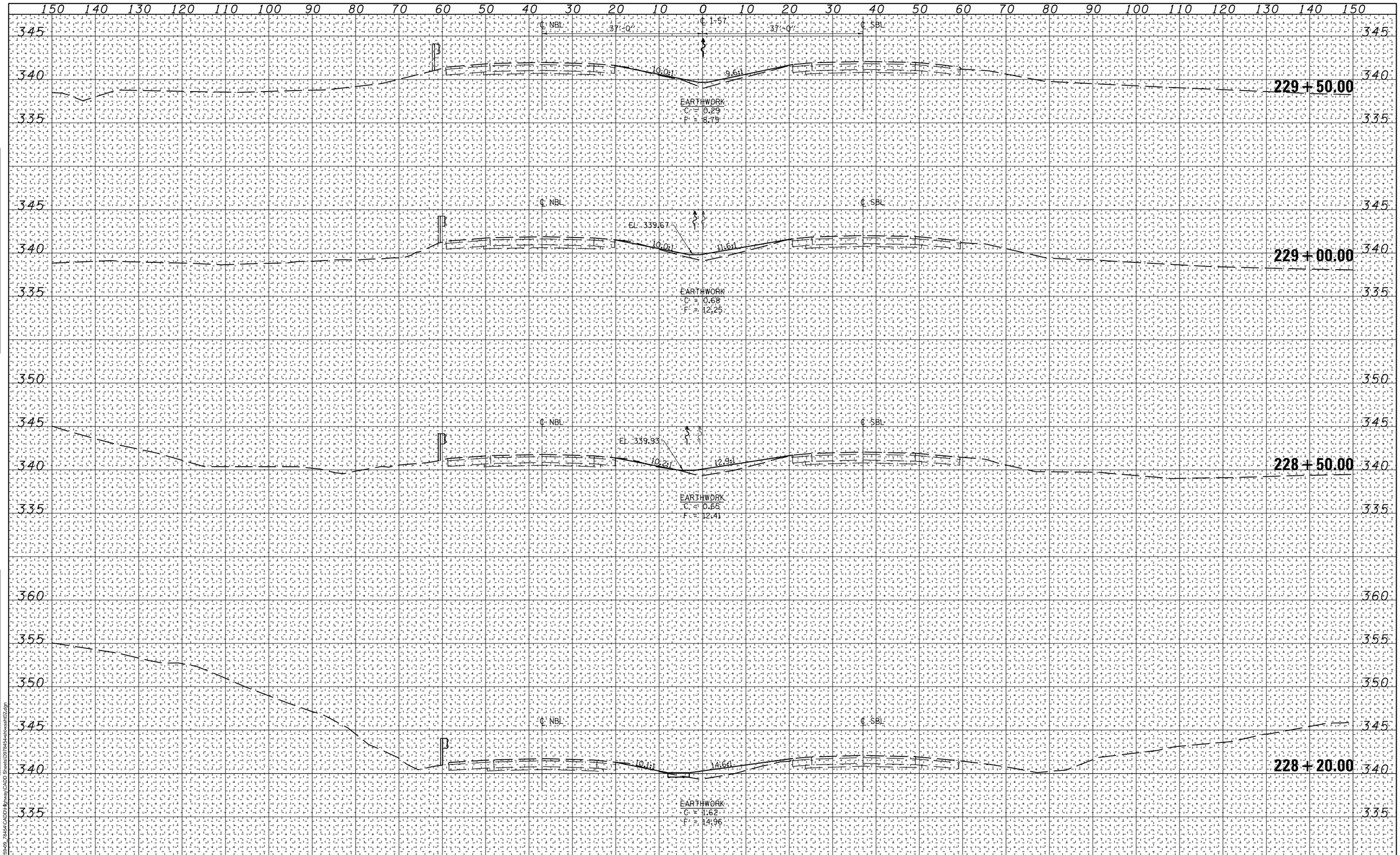

FINAL SURVEY	BY	DATE
SURVEYED		
PLOTTED		
TEMPLATE		
AREAS		
AREAS CHECKED		
NOTE BOOK NO.		

ORIGINAL SURVEY	BY	DATE
SURVEYED		
PLOTTED		
TEMPLATE		
AREAS		
AREAS CHECKED		
NOTE BOOK NO.		

MODEL: Default
FILE NAME: Y:\DOT\1259x09_78454\CADD\Highway\CADD Sheets\D978454-sht-xsst1of02.dgn

ESCA CONSULTANTS, INC.
CIVIL • STRUCTURAL • ENVIRONMENTAL

USER NAME = kjk	DESIGNED - KJK	REVISED -	
SCALES: (HORIZ) 1"=50' (VERT) 1"=5'	DRAWN - KJK	REVISED -	
PLOT SCALE = 20.0000 ' / in.	CHECKED - JMS	REVISED -	
PLOT DATE = 12/11/2018	DATE - 11/18	REVISED -	

STATE OF ILLINOIS
DEPARTMENT OF TRANSPORTATION

FAI 57 (I-57) CROSS SECTIONS

SCALE: AS SHOWN | SHEET 4 OF 5 SHEETS | STA. 228+20.00 TO STA. 229+50.00

F.A.I. RTE.	SECTION	COUNTY	TOTAL SHEETS	SHEET NO.
57	(77-1-3)HB-2	PULASKI	92	91
		CONTRACT NO. 78454		
	ILLINOIS	FED. AID PROJECT AID		

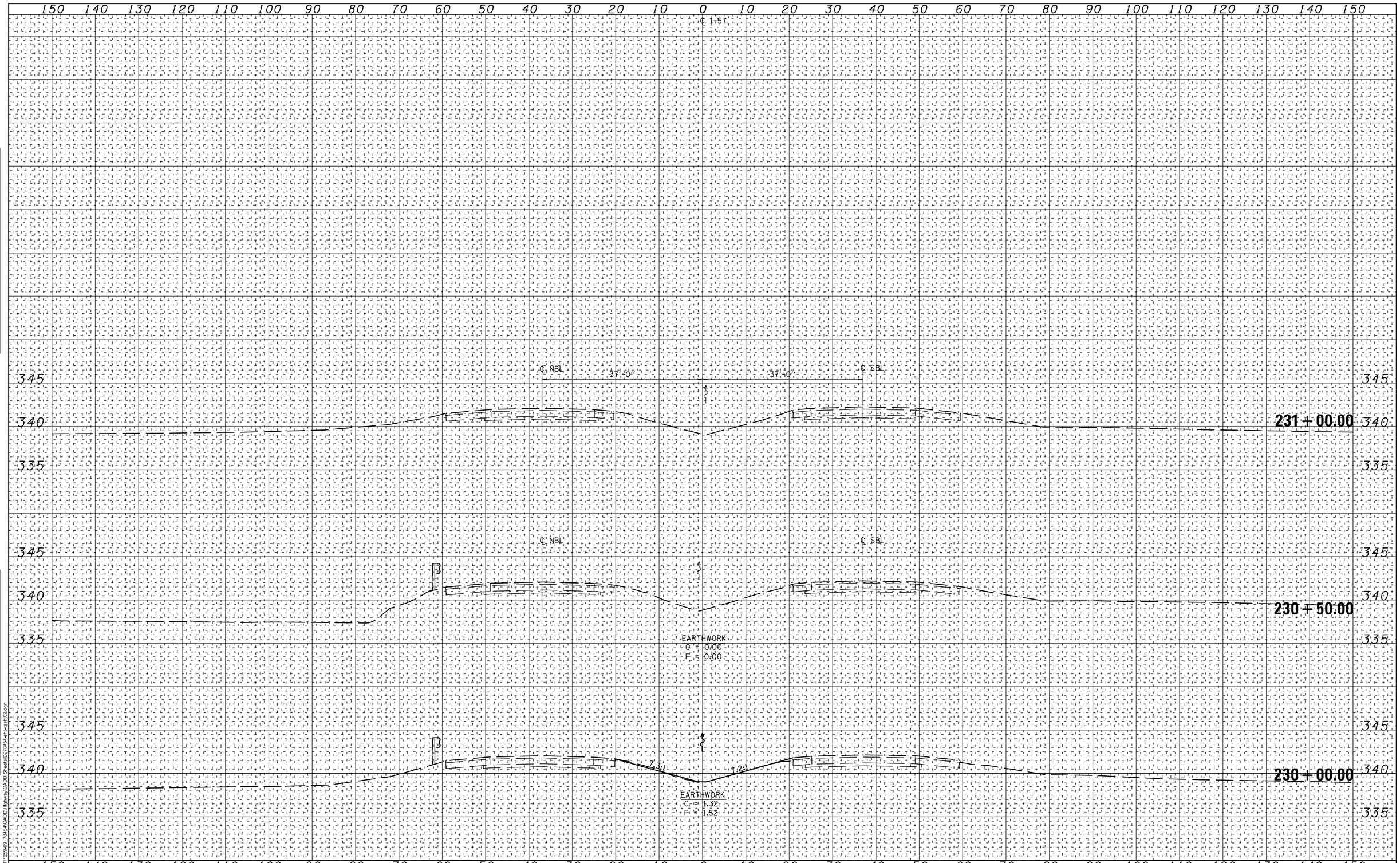

FINAL SURVEY	BY	DATE
SURVEYED		
PLOTTED		
TEMPLATE		
AREAS		
AREAS CHECKED		
NOTE BOOK		
NO.		

ORIGINAL SURVEY	BY	DATE
SURVEYED		
PLOTTED		
TEMPLATE		
AREAS		
AREAS CHECKED		
NOTE BOOK		
NO.		

MODEL: Default
FILE NAME: Y:\IDOT\12594-09_78454\CADD\Highway\CADD Sheets\0078454-sht xsst102.dgn

ESCA CONSULTANTS, INC.
CIVIL & STRUCTURAL ENGINEERS

USER NAME = kjk	DESIGNED - KJK	REVISED -	
SCALES: (HORIZ) 1"=50' (VERT) 1"=5'	DRAWN - KJK	REVISED -	
PLOT SCALE = 20.0000 ' / in.	CHECKED - JMS	REVISED -	
PLOT DATE = 12/11/2018	DATE - 11/18	REVISED -	

STATE OF ILLINOIS
DEPARTMENT OF TRANSPORTATION

FAI 57 (I-57) CROSS SECTIONS

SCALE: AS SHOWN | SHEET 5 OF 5 SHEETS | STA. 230+00.00 TO STA. 231+00.00

F.A.I. RTE.	SECTION	COUNTY	TOTAL SHEETS	SHEET NO.
57	(77-1-3)HB-2	PULASKI	92	92

CONTRACT NO. 78454

ILLINOIS | FED. AID PROJECT AID