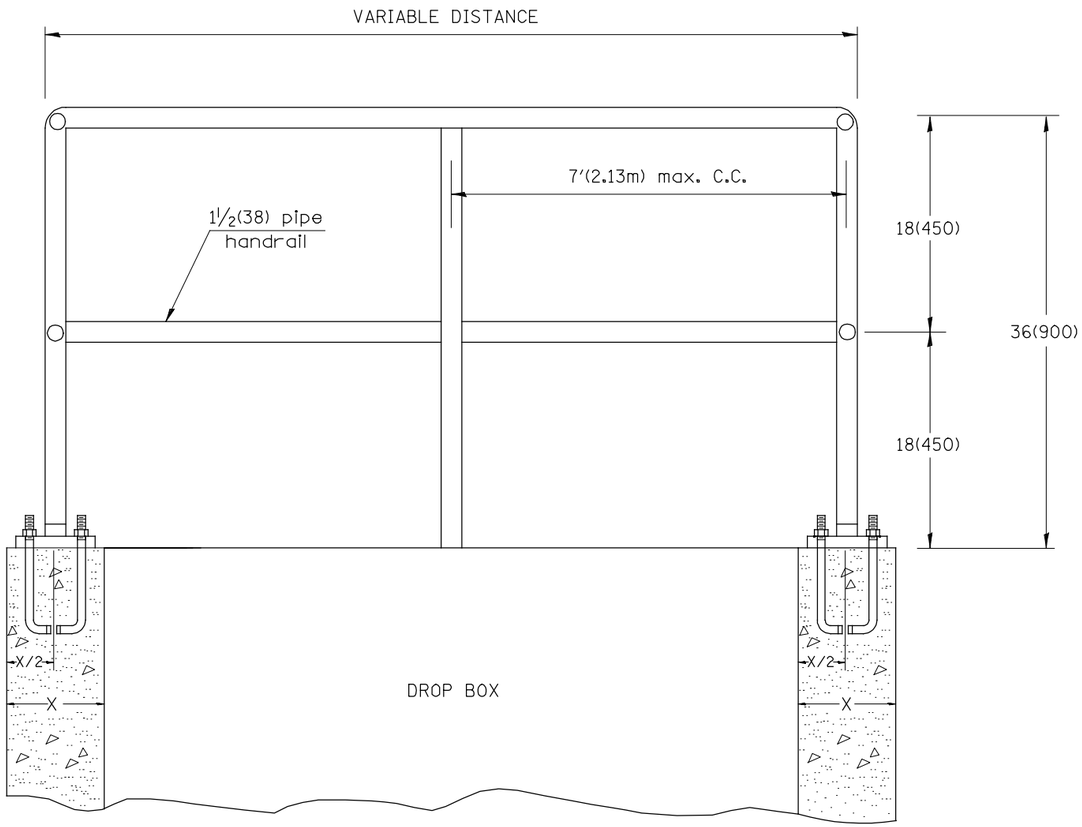

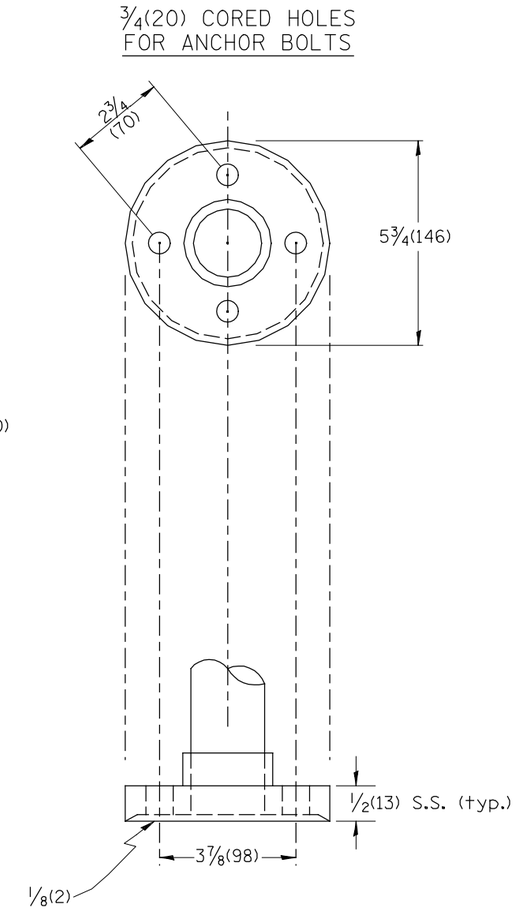

CAST IRON OR STRUCTURAL STEEL FITTING

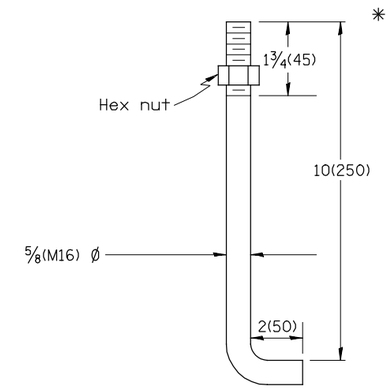

BUILT-IN ANCHOR BOLT
⅝(M16) Ø, 12(300) LONG
(SEE GENERAL NOTE 3)

GENERAL NOTES:

1. Article 509.04 of the Standard Specifications shall apply.
2. Connection of railing to posts shall be made be continuous welding or with using standard pipe fitting.
3. An equivalent epoxy anchor stud can be used in place of anchor shown. Anchor bolt holes shall be ¾(20) in diameter and 5(125) deep. They shall be predrilled with an electric hammer drill to a depth of 4(100) prior to use of a pnuematic drill for the remaining 4(100). A two component encapsulated epoxy such as "Parabond" or an equivalent shall be used. Installation shall be according to Manufacturer's recommendations.
4. The pipe handrail shall be galvanized by the hot dip process.

All dimensions are in inches (millimeters) unless otherwise noted.

01-01-97	RENUM. B-11.01, METRICS, NEW REVISION BOX,	T.P.
	REVISED TITLE BOX, REVISED NOTES	
10-16-06	REVISED TO 2007 SPEC.	M.A.

STATE OF ILLINOIS
DEPARTMENT OF TRANSPORTATION

DETAIL OF PIPE HANDRAIL FASTENING

NOT TO SCALE

CADD STD. 510001-D4

F.A.P RTE.	SECTION	COUNTY	TOTAL SHEETS	SHEET NO.
407	(55-3)A	McDONOUGH	671	321
		CONTRACT NO. 68A42		
FED. ROAD DIST. NO.	ILLINOIS	FED. AID PROJECT		