HYDRANT INSTALLATION NOTES:

1. CONCRETE BASE AND BLOCKING MATERIAL SHALL NOT BLOCK OR OBSTRUCT HYDRANT DRAINAGE.

2. BOTH DRAINAGE STONE AND EARTH FILL ABOVE THE STONE SHALL BE TAMPED

3. DRAINAGE STONE MUST BE COVERED WITH FILTER FABRIC

4. A VALVE BOX ADAPTER/ CENTERING DEVICE OF THE APPROPRIATE SIZE AND TYPE MANUFACTURED BY ADAPTER INC. SHALL BE UTILIZED WITH ALL VALVE BOX INSTALLATIONS

5. REFER TO TYPICAL VALVE DETAIL FOR INSTALLATION OF AUXILIARY VALVE AND VALVE BOX.

6. TRACER WIRE TO BE INSTALLED IN ALL VALVE BOXES AS ILLUSTRATED.

7. IF MANUFACTURED WEDGES ARE USED TO ASSIST WITH BLOCKING TO CREATE A TIGHT FIT BETWEEN THE BLOCKING AND THE FITTING, THE MATERIAL SHALL BE CAST IRON, HARD PLASTIC, OR OTHER MATERIAL APPROVED BY THE ENGINEER (NO WOOD OR OTHER MATERIAL WHICH COULD DETERIORATE SHALL BE USED)

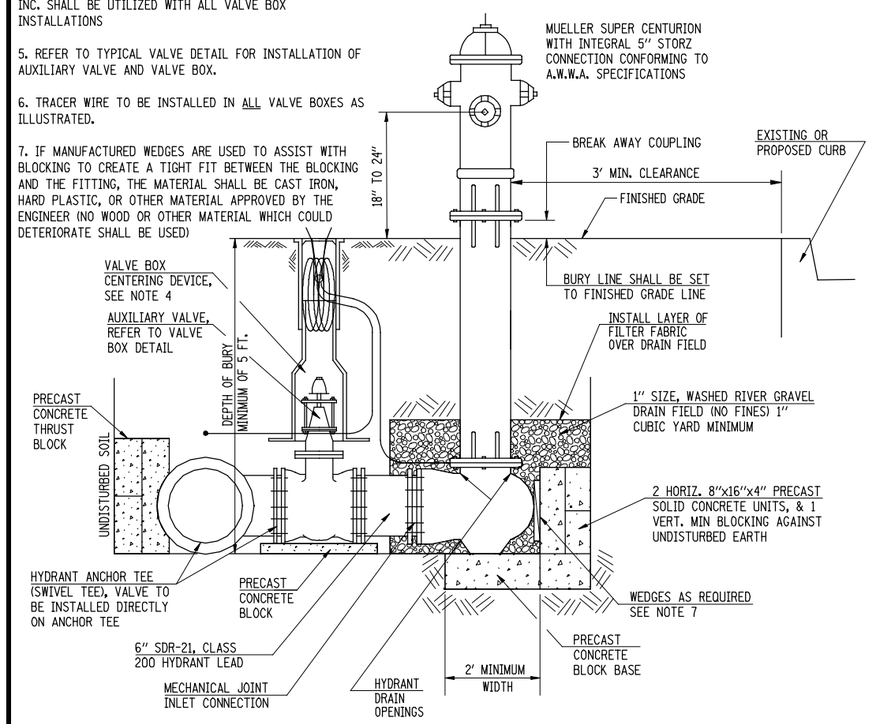

HYDRANT INSTALLATION DETAIL

CITY OF MACOMB, ILLINOIS
PUBLIC WORKS DEPARTMENT
233 CENTER STREET
MACOMB, ILLINOIS 61455
(309) 833-2821

TYPICAL FIRE HYDRANT INSTALLATION DETAIL

DATE: 9/28/2012
CHECKED: KC/JB
SHEET NO. 1 of 1

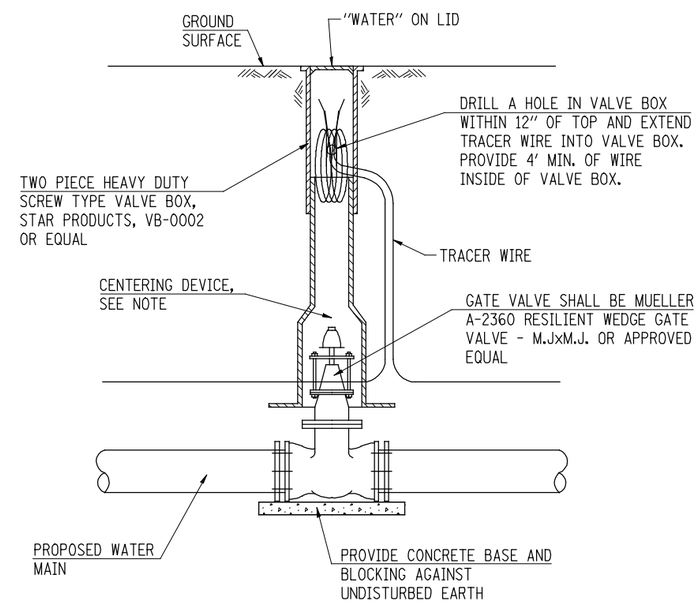

NOTE:

A VALVE BOX ADAPTER/ CENTERING DEVICE OF THE APPROPRIATE SIZE AND TYPE MANUFACTURED BY ADAPTER INC. SHALL BE UTILIZED WITH ALL VALVE BOX INSTALLATIONS, SEE WRITTEN SPECIFICATION FOR APPROVED PRODUCT

CITY OF MACOMB, ILLINOIS
PUBLIC WORKS DEPARTMENT
233 CENTER STREET
MACOMB, ILLINOIS 61455
(309) 833-2821

TYPICAL WATER VALVE INSTALLATION DETAIL

DATE: 6/10/2011
CHECKED: KC/JB
SHEET NO. 1 of 1

FILE NAME =	USER NAME = jdeen	DESIGNED - JRB	REVISED -
v:\transportation\2891\grading plans\W001.dgn		DRAWN - RLR	REVISED -
	PLOT SCALE = 1.00 ' / IN.	CHECKED - AWM	REVISED -
	PLOT DATE = 12/12/2012	DATE - 12-12-12	REVISED -

STATE OF ILLINOIS
DEPARTMENT OF TRANSPORTATION

FAP 407 (IL RTE 336)
UTILITY SPECIAL DETAILS

SCALE: 1"=50 | SHEET NO. 1 OF 4 SHEETS | STA. TO STA.

F.A.P. RTE.	SECTION	COUNTY	TOTAL SHEETS	SHEET NO.
407	(55-3)A	McDONOUGH	671	174

CONTRACT NO. 68A42

ILLINOIS FED. AID PROJECT