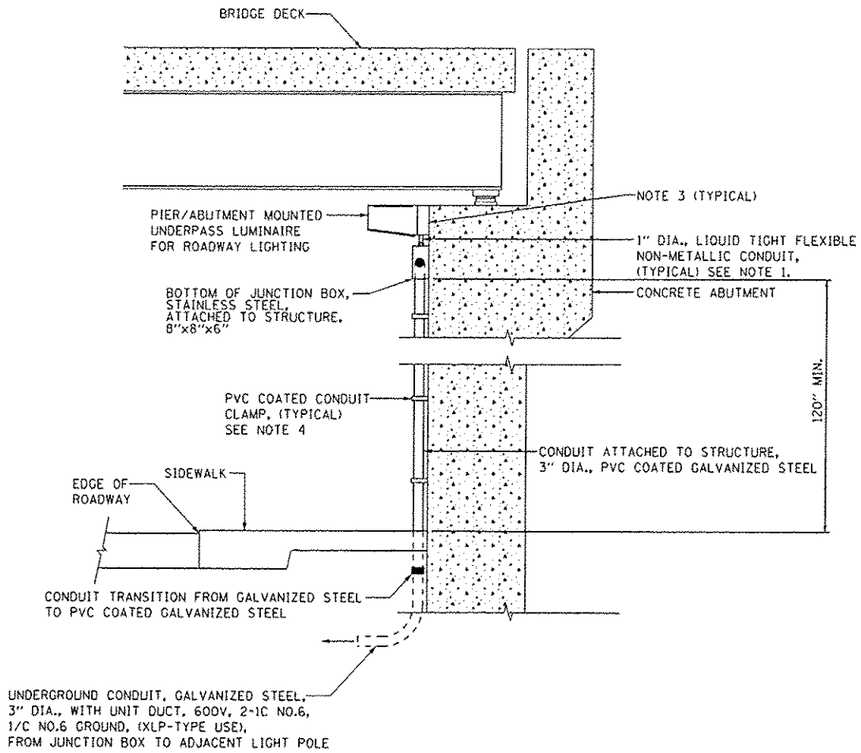

TYPICAL ABUTMENT MOUNTED UNDERPASS LUMINAIRE INSTALLATION DETAILS

NOT TO SCALE

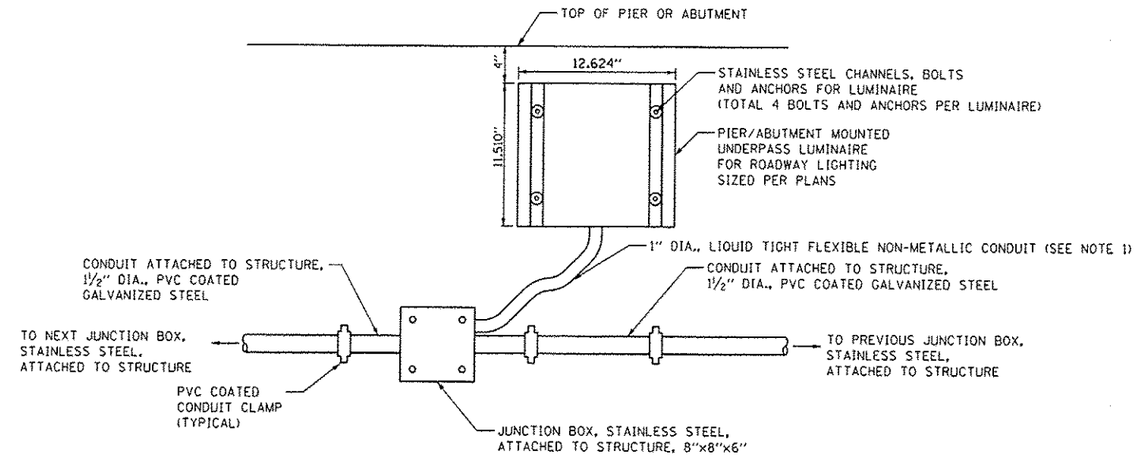

TYPICAL UNDERPASS LUMINAIRE AND JUNCTION BOX MOUNTING DETAIL

NOT TO SCALE

PVC COATED CONDUIT CLAMP

NOT TO SCALE

NOTES:

1. LIQUID TIGHT FLEXIBLE NON-METALLIC CONDUIT, MAXIMUM LENGTH 6'-0", TYPICAL FOR EACH INSTANCE AS SHOWN. PROVIDE PVC COATED RIGID GALVANIZED STEEL CONDUIT AS REQUIRED NOT TO EXCEED 6'-0" OF FLEXIBLE LIQUID TIGHT NON-METALLIC CONDUIT. LIQUID TIGHT FLEXIBLE NON-METALLIC CONDUIT WILL BE INCLUDED IN THE COST OF THE "CONDUIT ATTACHED TO STRUCTURE, OF THE CORRESPONDING DIA., PVC COATED GALVANIZED STEEL" PAY ITEM EXCEPT THAT 1" DIA. CONDUIT AND 1" DIA. FLEXIBLE CONDUIT SHALL BE INCLUDED IN THE COST OF UNDERPASS LUMINAIRE INSTALLATION.
2. UNDERPASS LUMINAIRE MOUNTED TO FACE OF PIER OR ABUTMENT WALL. MOUNTING HEIGHT OF 4" BELOW THE TOP OF PIER OR ABUTMENT WALL TYPICAL FOR ALL PIER/ABUTMENT MOUNTED UNDERPASS LUMINAIRES UNLESS OTHERWISE NOTED.
3. EXPANSION ANCHOR, POWER ACTUATED FASTENER WILL NOT BE ALLOWED. EXPANSION ANCHOR MUST BE SIZED IN ACCORDANCE WITH MANUFACTURER REQUIREMENTS.
4. SECURE THE CONDUIT WITH PVC COATED CONDUIT CLAMPS OR CONDUIT BEAM CLAMPS AS SHOWN AT 5'-0" INTERVALS FOR LATERALS AND WITHIN 2'-0" MAXIMUM FROM ANY JUNCTION BOX, FLEXIBLE CONDUIT, OR CHANGE IN DIRECTION. ALL PVC COATED CONDUIT CLAMPS OR BEAM CLAMPS SHALL BE INCLUDED WITH THE COST OF THE "CONDUIT ATTACHED TO STRUCTURE, OF THE CORRESPONDING DIA., PVC COATED GALVANIZED STEEL" PAY ITEM.
5. ATTACHING THE UNDERGROUND CONDUIT, GALVANIZED STEEL TO THE STRUCTURE SHALL BE INCLUDED IN THE COST OF THE UNDERGROUND CONDUIT, GALVANIZED STEEL PAY ITEMS.
6. ALL CONDUIT ATTACHED TO STRUCTURE SHALL BE PVC COATED RIGID STEEL CONDUIT (PVCC RGC) TYPICAL.
7. ALL CONDUIT TRANSITIONS SHALL BE INCLUDED WITH THE COST OF THE "CONDUIT ATTACHED TO STRUCTURE, OF THE CORRESPONDING DIA., PVC COATED GALVANIZED STEEL" PAY ITEM.

DIRECTORY : L:\DOT\CONTRACTS\DOCS\Dwg\CADD\Sheets\064821.dgn
USER NAME : Jason Dove

CMT CRAWFORD, MURPHY & TILLY, INC. CONSULTING ENGINEERS License No. 184-000613	MODEL NAME : Default	DESIGNED - JWD	REVISED -
	FILE NAME = D064821-ch14p019.dgn	DRAWN - JWD	REVISED -
	PLOT SCALE = 40.0000 ' / in.	CHECKED - AB	REVISED -
	PLOT DATE = 2/22/2013 - 3:45:51 PM	DATE - 11/02/2012	REVISED -

STATE OF ILLINOIS
DEPARTMENT OF TRANSPORTATION

ROADWAY LIGHTING DETAIL
WALL MOUNT UNDERPASS LUMINAIRE INSTALLATION DETAILS

SCALE: N/A | SHEET 19 OF 32 SHEETS | STA. TO STA.

F.A.P. RTE.	SECTION	COUNTY	TOTAL SHEETS	SHEET NO.
742	(32, 33) R-1	WINNEBAGO	705	505
		CONTRACT NO. 64821		
		ILLINOIS FED. AID PROJECT		