CIVIL ENGINEERING CONSULTANTS
RWA
Regina Webster & Associates, Inc.
8619 W. Bryn Mawr Ave., Suite 602
Chicago, IL 60631-3551
773-283-2600 Fax: 773-283-2602
www.RWAengineers.com

CONTROLLER SEQUENCE

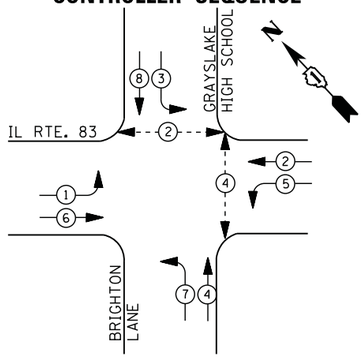

LEGEND

- DUAL ENTRY PHASE
- PEDESTRIAN PHASE
- SINGLE ENTRY PHASE
- OVERLAP
- * NUMBER REFERS TO ASSOCIATED PHASE

PHASE DESIGNATION DIAGRAM

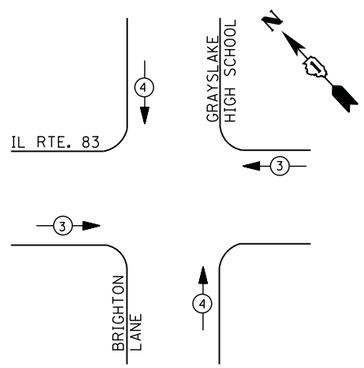

EMERGENCY VEHICLE PREEMPTION SEQUENCE

EMERGENCY VEHICLE PREEMPTORS		
EMERGENCY VEHICLE PREEMPTOR	3	4
MOVEMENT	← →	↓ ↑

I. D. O. T.
TRAFFIC SIGNAL INSTALLATION
ELECTRICAL SERVICE REQUIREMENTS

TYPE	NO. LAMPS	WATTAGE INCAND.	WATTAGE LED	% OPERATIONS	TOTAL WATTAGE
SIGNAL (RED)	14	135	17	0.50	119
(YELLOW)	14	135	25	0.25	88
(GREEN)	14	135	15	0.25	53
ARROW	16	135	12	0.10	19
PED. SIGNAL	4	90	25	1.00	100
CONTROLLER	1	100	100	1.00	100
ILLUM. SIGN		252	25	0.05	--
VIDEO SYSTEM	--	150	-	1.00	--
FLASHER LED					
				TOTAL =	479

ENERGY COSTS- BILLED TO: VILLAGE OF ROUND LAKE BEACH
1937 NORTH MUNICIPAL WAY
ROUND LAKE BEACH, IL 60073

ENERGY SUPPLY - CONTACT TERRI BLECK
PHONE 847-816-5239
COMMONWEALTH EDISON

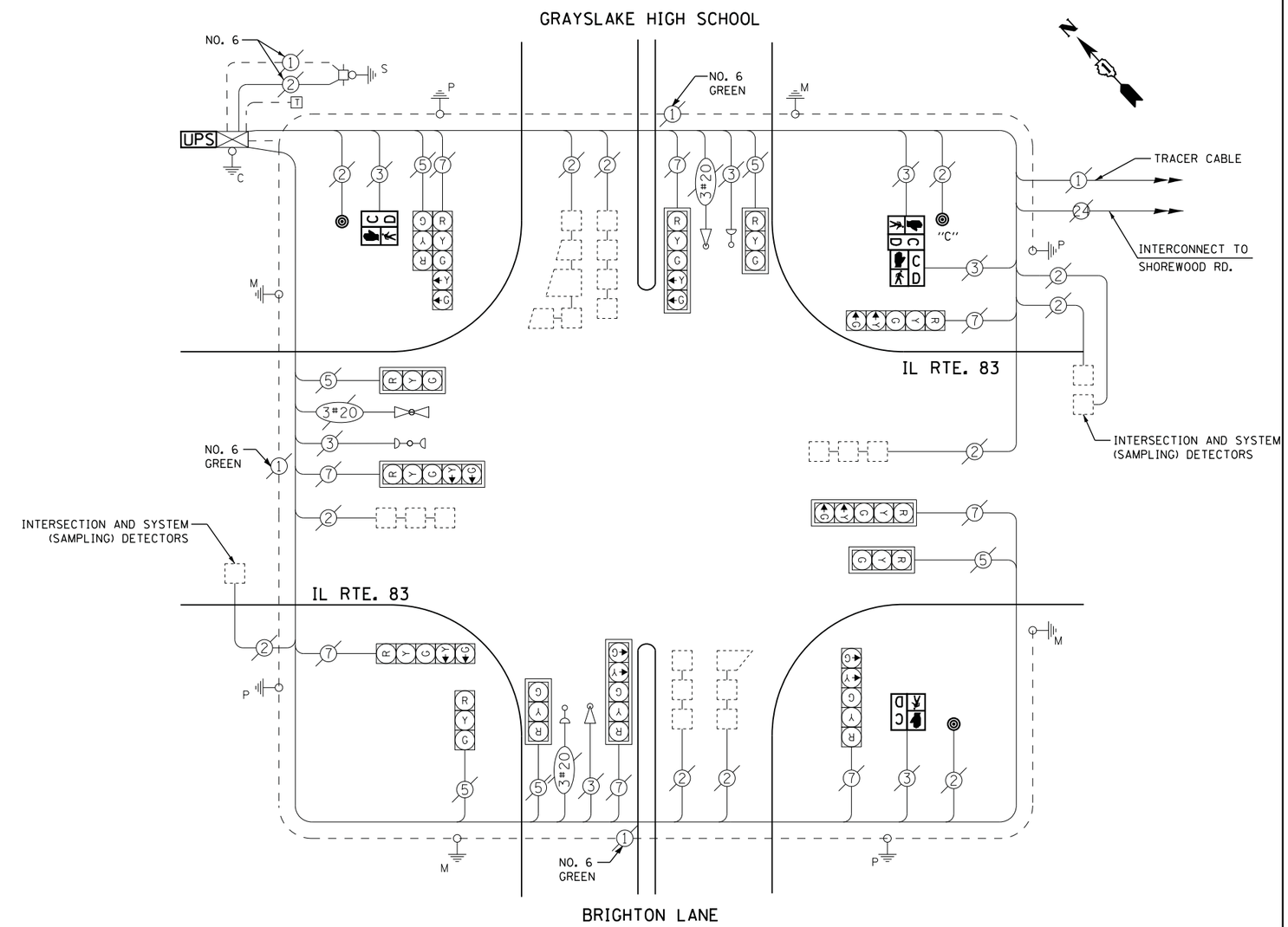

CABLE PLAN

NOTES:
PUSH BUTTON "C" SHALL PLACE A CALL IN PHASED 2 AND 4

SCHEDULE OF QUANTITIES

QUANTITY	UNIT	ITEM
1	EACH	MAINTENANCE OF EXISTING TRAFFIC SIGNAL INSTALLATION
2	EACH	PEDESTRIAN SIGNAL HEAD, LED, 1-FACE, BRACKET MOUNTED WITH COUNTDOWN TIMER
1	EACH	PEDESTRIAN SIGNAL HEAD, LED, 2-FACE, BRACKET MOUNTED WITH COUNTDOWN TIMER
1	EACH	MODIFY EXISTING CONTROLLER CABINET
1	EACH	REMOVE EXISTING TRAFFIC SIGNAL EQUIPMENT
1	EACH	UNINTERRUPTABLE POWER SUPPLY, SPECIAL
3	EACH	PEDESTRIAN PUSH-BUTTON, NON-LATCHING

REMOVAL OF EXISTING TRAFFIC SIGNAL EQUIPMENT

THE FOLLOWING ITEMS SHALL BE REMOVED BY THE CONTRACTOR AND SHALL BE DISPOSED OF BY THEM OUTSIDE THE RIGHT-OF-WAY AT THEIR EXPENSE. THE SALVAGE VALUE OF THE REMOVED EQUIPMENT SHALL BE REFLECTED IN THE CONTRACT BID PRICE.

4 EACH PEDESTRIAN SIGNAL HEAD
3 EACH PEDESTRIAN PUSH-BUTTON

TS# 12317
ROUND LAKE BEACH

FILE NAME = N:\Projects3\12004\DesignCAD\Sheet Files\12-004 Sheets NW Lake Co\12317_CAB_LAKE.dgn	USER NAME = $USER$	DESIGNED - DW	REVISED -
	PLOT SCALE = $SCALE$	DRAWN - JDH	REVISED -
	PLOT DATE = 12/10/2012	CHECKED - KMM	REVISED -
		DATE -	REVISED -

STATE OF ILLINOIS
DEPARTMENT OF TRANSPORTATION

IL ROUTE 83 AT BRIGHTON LANE/GRAYSLAKE HIGH SCHOOL
SCHEDULE OF QUANTITIES, CABLE PLAN, PHASE DESIGNATION DIAGRAM
AND EMERGENCY VEHICLE PREEMPTION SEQUENCE

SCALE: N.T.S. | SHEET NO. OF SHEETS | STA. TO STA.

F.A. RTE.	SECTION	COUNTY	TOTAL SHEETS	SHEET NO.
	2012-040TS	LAKE	60	49
		CONTRACT NO. 60T85		
		ILLINOIS FED. AID PROJECT		