F.A.U. RTE.	SECTION	COUNTY	TOTAL SHEETS	SHEET NO.
6097	23-00073-00-BT	LASALLE	183	1
FED. ROAD DIST. NO. _	ILLINOIS	CONTRACT NO. 87876		

TOTAL SHEETS: 183+1 = 184 SHEETS

03-07-2025 LETTING ITEM 186

STATE OF ILLINOIS
DEPARTMENT OF TRANSPORTATION
ILLINOIS TRANSPORTATION ENHANCEMENT PROGRAM
PERU ITEP SHARED USE PATH PROJECT
SECTION 23-00073-00-BT

CITY OF PERU
LASALLE COUNTY
C-93-100-25

SEE SHEET 2 FOR INDEX OF SHEETS AND LIST OF HIGHWAY STANDARDS

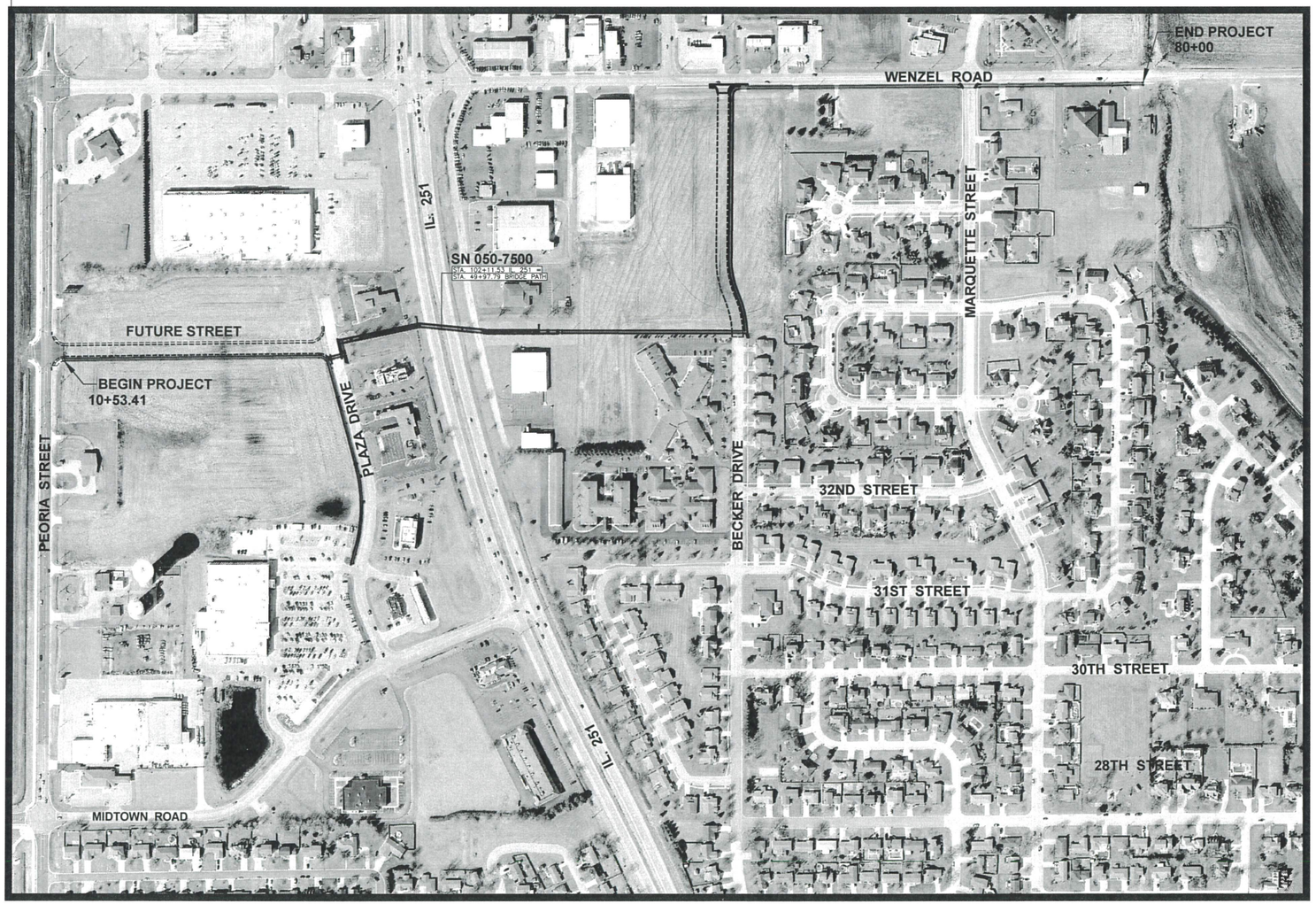

N

LOCATION OF SECTION INDICATED THUS: -

PATH DESIGN SPEED - 18MPH

100' 200' 300' — 1"= 100'
10' 20' 30' — 1"= 10'
50' 100' — 1"= 50'
50' 100' — 1"= 40'
50' 100' — 1"= 30'
50' 100' — 1"= 20'

FULL SIZE PLANS HAVE BEEN PREPARED USING STANDARD ENGINEERING SCALES. REDUCED SIZED PLANS WILL NOT CONFORM TO STANDARD SCALES. IN MAKING MEASUREMENTS ON REDUCED PLANS, THE ABOVE SCALES MAY BE USED.

J.U.L.I.E.
JOINT UTILITY LOCATION INFORMATION FOR EXCAVATION
1-800-892-0123
OR 811

GROSS LENGTH = 5741.14' (1.087 MILES)
NET LENGTH = 5648.12' (1.070 MILES)

0 1/4 MILE 1/2 MILE
GRAPHIC SCALE

12/23/24
date

JAMES K. CLINARD
LICENSED PROFESSIONAL ENGINEER NO. 062-041793
STATE OF ILLINOIS
expires 11-30-2025
signature
PROFESSIONAL DESIGN FIRM LICENSE NO. 184-001717

STATE OF ILLINOIS
DEPARTMENT OF TRANSPORTATION
DIVISION OF HIGHWAYS

SUBMITTED 12/24 20 24
MAYOR, CITY OF PERU

January 3, 2025
DISTRICT 1 LOCAL ROADS AND STREETS ENGINEER

RELEASED FOR BID BASED ON LIMITED REVIEW January 3, 2025
Trisha Thompson
REGION 2 ENGINEER

JAMES K CLINARD
CHAMLIN & ASSOCIATES
815.223.3344

CONTRACT 87876

INDEX OF SHEETS

HIGHWAY STANDARDS

000001-08	STANDARD SYMBOLS, ABBREVIATIONS AND PATTERNS
001006	DECIMAL OF AN INCH AND OF A FOOT
280001-07	TEMPORARY EROSION CONTROL SYSTEMS
420001-10	PAVEMENT JOINTS
424001-12	PERPENDICULAR CURB RAMPS FOR SIDEWALKS
424016-06	MID-BLOCK CURB RAMPS FOR SIDEWALKS
424021-07	DEPRESSED CORNER FOR SIDEWALKS
442201-03	CLASS C AND D PATCHES
515001-04	NAME PLATE FOR BRIDGES
542001-06	CONCRETE END SECTIONS FOR PIPE CULVERTS 15" (375mm) THRU 84" (2100mm) DIA,
542301-03	PRECAST REINFORCED CONCRETE FLARED END SECTION
542501-02	INLET BOX TYPE 24 (600) A
542546-01	FLUSH INLET BOX FOR MEDIAN
602301-04	INLET, TYPE A
602306-03	INLET, TYPE B
602401-07	PRECAST MANHOLE, TYPE A, 4' (1.22 m) DIAMETER
602402-03	PRECAST MANHOLE, TYPE A, 5' (1.52 m) DIAMETER
602601-06	PRECAST REINFORCED CONCRETE FLAT SLAB TOP
602701-02	MANHOLE STEPS
604001-05	FRAME AND LIDS, TYPE 1
604006-05	FRAME AND GRATE, TYPE 3
604036-03	GRATE, TYPE 8
606001-08	CONCRETE CURB TYPE B AND COMBINATION CONCRETE CURB AND GUTTER
643001-03	SAND MODULE IMPACT ATTENUATORS
701001-02	OFF-ROAD OPERATIONS, 2L, 2W, MORE THAN 15' AWAY
701006-05	OFF-ROAD OPERATIONS, 2L, 2W, 15' TO 24" FROM EDGE OF PAVEMENT
701101-05	OFF-ROAD OPERATIONS, MULTILANE, 15' (4.5 m) TO 24" (600 mm) FROM PAVEMENT EDGE
701106-02	OFF-ROAD OPERATIONS, MULTILANE, MORE THAN 15' (4.5 m) AWAY
701501-06	URBAN LANE CLOSURE, 2L, 2W, UNDIVIDED
701502-09	URBAN LANE CLOSURE, 2L, 2W, WITH BIDIRECTIONAL LEFT TURN LANE
701601-09	URBAN LANE CLOSURE, MULTILANE 1W OR 2W, WITH NONTRAVERSABLE MEDIAN
701701-10	URBAN LANE CLOSURE, MULTILANE INTERSECTION
701801-06	SIDEWALK, CORNER OR CROSSWALK CLOSURE
701901-10	TRAFFIC CONTROL DEVICES
704001-08	TEMPORARY CONCRETE BARRIER
720001-01	SIGN PANEL MOUNTING DETAILS
720006-04	SIGN PANEL ERECTION DETAILS
812001-01	RACEWAYS EMBEDDED IN STRUCTURE

GENERAL NOTES

EXCEPT AS NOTED ON THE PLANS, PAVEMENT GRADES SHOWN ARE AT THE TOP OF PAVEMENT SURFACES.

BEFORE ORDERING PIPE CULVERTS OR PIPE DRAINS, THE CONTRACTOR SHALL CONSULT THE ENGINEER FOR EXACT LENGTHS.

THE FINISHED EARTHWORK SHALL HAVE A VEGETATION SUSTAINING SOIL COVERING THE TOP FOUR INCHES (100 MILLIMETERS) IN AREAS TO BE SEEDED OR SODDED. THE VEGETATION SUSTAINING SOIL REQUIRED WILL NOT BE PAID FOR SEPARATELY BUT WILL BE INCLUDED IN THE COST OF FURNISHED EXCAVATION.

ALL ELEVATIONS REFERRING TO U.S.G.S. MEAN SEA LEVEL DATUM.

THE FOLLOWING RATES OF APPLICATION HAVE BEEN USED IN CALCULATING PLAN QUANTITIES:

GRANULAR MATERIALS	2.05	TONS / CU YD

THE WORK REQUIRED TO CONNECT ANY SEWER TO AN EXISTING DRAINAGE STRUCTURE OR PIPE WILL NOT BE PAID FOR SEPARATELY, BUT WILL BE CONSIDERED AS INCLUDED IN THE CONTRACT UNIT PRICE BID FOR THE SEWER ITEMS.

MEMBERS OF JULIE KNOWN TO BE WITHIN THE LIMITS OF THE IMPROVEMENT ARE:

AT&T MIDWEST 1000 COMMERCE DRIVE FLOOR 1 OAK BROOK, IL 60523	1-630-573-6414
COMCAST 4450 KISHWAUKEE STREET ROCKFORD, IL 61109	1-815-395-8977
AMEREN IP 340 RACCUGLIA DRIVE PO BOX 1428 LASALLE, IL 61301	1-815-224-6202
CITY OF PERU ELECTRIC DEPARTMENT 4005 PLANK ROAD PERU, IL 61354	1-815-223-0044
CITY OF PERU PUBLIC SERVICES 1901 FOURTH STREET PERU, IL 61354	1-815-223-1148

COMMITMENTS
THE CITY SHALL SUBMIT AN AS-BUILT DRAWING OF SHEET 57 SHOWING VERTICAL CLEARANCES OVER IL 251 AND THE FRONTAGE ROAD TO IDOT LOCAL ROADS ENGINEER.

"CONTRACT NO. 87876"

DRAWN BY: LMP
CHECKED BY: JKC
DATE: 09/2023

REVISIONS

LEVEL	BY	DATE	DESCRIPTION

Chamlin & Associates

PERU MORRIS
OTTAWA MENDOTA
ILLINOIS

PERU ITEP SHARED USE PATH PROJECT
SECTION 23-00073-00-BT
LASALLE COUNTY

INDEX OF SHEETS AND GENERAL NOTES

CONSTRUCTION PLANS

CURRENT AS OF: 12/20/2024
SCALE: AS NOTED
SHEET 2
FILE NO.: 66437.00 Y-
OF 183

	CODE NO.	ITEM	UNIT	TOTAL QUANTITY	CONSTR. CODE ROADWAY 0028 URBAN
	20100110	TREE REMOVAL (6 TO 15 UNITS DIAMETER)	UNIT	56	56
	20100210	TREE REMOVAL (OVER 15 UNITS DIAMETER)	UNIT	16	16
	20200100	EARTH EXCAVATION	CU YD	1606	1606
	20201200	REMOVAL AND DISPOSAL OF UNSUITABLE MATERIAL	CU YD	6120	6120
	20400800	FURNISHED EXCAVATION	CU YD	3344	3344
	20800150	TRENCH BACKFILL	CU YD	480	480
*	25000110	SEEDING, CLASS 1A	ACRE	5.75	5.75
*	25000210	SEEDING, CLASS 2A	ACRE	0.5	0.5
*	25000400	NITROGEN FERTILIZER NUTRIENT	POUND	564	564
*	25000500	PHOSPHORUS FERTILIZER NUTRIENT	POUND	564	564
*	25000600	POTASSIUM FERTILIZER NUTRIENT	POUND	564	564
*	25100115	MULCH, METHOD 2	ACRE	6.25	6.25
*	25200100	SODDING	SQ YD	941	941
*	25200200	SUPPLEMENTAL WATERING	UNIT	6	6

* SPECIALTY ITEM

△ SPECIAL PROVISIONS

"CONTRACT NO. 87876"

DRAWN BY: JJW
CHECKED BY: JKC
DATE: 12/2023

REVISIONS			
LEVEL	BY	DATE	DESCRIPTION

Chamlin & Associates

PERU MORRIS
OTTAWA MENDOTA
ILLINOIS

PERU ITEP SHARED USE PATH PROJECT
SECTION 23-00073-00-BT
LASALLE COUNTY

SUMMARY OF QUANTITIES

CONSTRUCTION PLANS

CURRENT AS OF: 12/20/2024
SCALE: AS NOTED
SHEET 3
FILE NO.: 66437.00 Y-
OF 183

CODE NO.	ITEM	UNIT	TOTAL QUANTITY	CONSTR. CODE ROADWAY 0028 URBAN
28000250	TEMPORARY EROSION CONTROL SEEDING	POUND	1267	1267
28000305	TEMPORARY DITCH CHECKS	FOOT	162	162
28000400	PERIMETER EROSION BARRIER	FOOT	890	890
28000500	INLET AND PIPE PROTECTION	EACH	10	10
35100100	AGGREGATE BASE COURSE, TYPE A	TON	1265	1265
40200100	AGGREGATE SURFACE COURSE, TYPE A	TON	245	245
40201000	AGGREGATE FOR TEMPORARY ACCESS	TON	103	103
42000300	PORTLAND CEMENT CONCRETE PAVEMENT 8"	SQ YD	169	169
42300200	PORTLAND CEMENT CONCRETE DRIVEWAY PAVEMENT, 6 INCH	SQ YD	360	360
42400100	PORTLAND CEMENT CONCRETE SIDEWALK 4 INCH	SQ FT	46935	46935
42400800	DETECTABLE WARNINGS	SQ FT	119	119
44000200	DRIVEWAY PAVEMENT REMOVAL	SQ YD	401	401
44000300	CURB REMOVAL	FOOT	190	190
44000500	COMBINATION CURB AND GUTTER REMOVAL	FOOT	679	679

* SPECIALTY ITEM

△ SPECIAL PROVISIONS

"CONTRACT NO. 87876"

DRAWN BY: JJW
CHECKED BY: JKC
DATE: 12/2023

REVISIONS			
LEVEL	BY	DATE	DESCRIPTION

Chamlin & Associates

PERU MORRIS
OTTAWA MENDOTA
ILLINOIS

PERU ITEP SHARED USE PATH PROJECT
SECTION 23-00073-00-BT
LASALLE COUNTY

SUMMARY OF QUANTITIES

CONSTRUCTION PLANS

CURRENT AS OF: 12/20/2024
SCALE: AS NOTED
SHEET 4
FILE NO.: 66437.00 Y-
OF 183

CODE NO.	ITEM	UNIT	TOTAL QUANTITY	CONSTR. CODE ROADWAY 0028 URBAN
44000600	SIDEWALK REMOVAL	SQ FT	6707	6707
44004000	PAVED DITCH REMOVAL	FOOT	52	52
44200071	PAVEMENT PATCHING, TYPE IV, 6 INCH	SQ YD	329	329
44200168	PAVEMENT PATCHING, TYPE II, 14 INCH	SQ YD	18	18
50105220	PIPE CULVERT REMOVAL	FOOT	97	97
50200100	STRUCTURE EXCAVATION	CU YD	1050	1050
50300225	CONCRETE STRUCTURES	CU YD	519.1	519.1
50300254	RUBBED FINISH	SQ FT	15634	15634
50300255	CONCRETE SUPERSTRUCTURE	CU YD	375.4	375.4
50300300	PROTECTIVE COAT	SQ YD	865	865
50800105	REINFORCEMENT BARS	POUND	9770	9770
50800205	REINFORCEMENT BARS, EPOXY COATED	POUND	121200	121200
* 50900805	PEDESTRIAN RAILING	FOOT	1056	1056
* 50901750	PARAPET RAILING	FOOT	1020	1020

* SPECIALTY ITEM

△ SPECIAL PROVISIONS

"CONTRACT NO. 87876"

DRAWN BY: JJW	REVISIONS			
CHECKED BY: JKC	LEVEL	BY	DATE	DESCRIPTION
DATE: 12/2023				

Chamlin & Associates

PERU MORRIS
OTTAWA MENDOTA
ILLINOIS

PERU ITEP SHARED USE PATH PROJECT
SECTION 23-00073-00-BT
LASALLE COUNTY

SUMMARY OF QUANTITIES

CONSTRUCTION PLANS

CURRENT AS OF: 12/20/2024
SCALE: AS NOTED
SHEET 5
FILE NO.: 66437.00 Y-
OF 183

CODE NO.	ITEM	UNIT	TOTAL QUANTITY	CONSTR. CODE ROADWAY 0028 URBAN
51201400	FURNISHING STEEL PILES HP10X42	FOOT	1496	1496
51202305	DRIVING PILES	FOOT	1496	1496
51203400	TEST PILE STEEL HP10X42	EACH	9	9
51204650	PILE SHOES	EACH	72	72
51500100	NAME PLATES	EACH	1	1
52000110	PREFORMED JOINT STRIP SEAL	FOOT	104	104
52100010	ELASTOMERIC BEARING ASSEMBLY, TYPE I	EACH	16	16
52100510	ANCHOR BOLTS, 3/4"	EACH	32	32
52200010	TEMPORARY SHEET PILING	SQ FT	107	107
52200900	CONCRETE STRUCTURES (RETAINING WALL)	CU YD	213.1	213.1
542A0220	PIPE CULVERTS, CLASS A, TYPE 1 15"	FOOT	95	95
54213459	END SECTIONS 24"	EACH	1	1
54213657	PRECAST REINFORCED CONCRETE FLARED END SECTIONS 12"	EACH	3	3
54213660	PRECAST REINFORCED CONCRETE FLARED END SECTIONS 15"	EACH	6	6

* SPECIALTY ITEM

△ SPECIAL PROVISIONS

"CONTRACT NO. 87876"

DRAWN BY: JJW
CHECKED BY: JKC
DATE: 12/2023

REVISIONS

LEVEL	BY	DATE	DESCRIPTION

Chamlin & Associates

PERU MORRIS
OTTAWA MENDOTA
ILLINOIS

PERU ITEP SHARED USE PATH PROJECT
SECTION 23-00073-00-BT
LASALLE COUNTY

SUMMARY OF QUANTITIES

CONSTRUCTION PLANS

CURRENT AS OF: 12/20/2024
SCALE: AS NOTED
SHEET 6
FILE NO.: 66437.00 Y-
OF 183

		CODE NO.	ITEM	UNIT	TOTAL QUANTITY	CONSTR. CODE ROADWAY 0028 URBAN
		54213663	PRECAST REINFORCED CONCRETE FLARED END SECTIONS 18"	EACH	4	4
		54244405	FLUSH INLET BOX FOR MEDIAN, STANDARD 542546	EACH	1	1
		54244805	INLET BOX, STANDARD 542501	EACH	1	1
		550A0050	STORM SEWERS, CLASS A, TYPE 1 12"	FOOT	97	97
		550A0090	STORM SEWERS, CLASS A, TYPE 1 18"	FOOT	750	750
		550A0120	STORM SEWERS, CLASS A, TYPE 1 24"	FOOT	45	45
		550A0380	STORM SEWERS, CLASS A, TYPE 2 18"	FOOT	366	366
		550A2340	STORM SEWERS, RUBBER GASKET, CLASS A, TYPE 1 18"	FOOT	9	9
		55100500	STORM SEWER REMOVAL 12"	FOOT	23	23
		55100700	STORM SEWER REMOVAL 15"	FOOT	28	28
*	△	56106400	ADJUSTING WATER MAIN 8"	FOOT	22	22
*	△	56400810	FIRE HYDRANT EXTENSION	FOOT	4	4
		58600101	GRANULAR BACKFILL FOR STRUCTURES	CU YD	354	354
		58700300	CONCRETE SEALER	SQ FT	3412	3412

* SPECIALTY ITEM

△ SPECIAL PROVISIONS

"CONTRACT NO. 87876"

DRAWN BY: JJW	REVISIONS			
CHECKED BY: JKC	LEVEL	BY	DATE	DESCRIPTION
DATE: 12/2023				

Chamlin & Associates

PERU MORRIS
OTTAWA MENDOTA
ILLINOIS

PERU ITEP SHARED USE PATH PROJECT
SECTION 23-00073-00-BT
LASALLE COUNTY

SUMMARY OF QUANTITIES

CONSTRUCTION PLANS

CURRENT AS OF: 12/20/2024
SCALE: AS NOTED
SHEET 7
FILE NO.: 66437.00 Y-
OF 183

CODE NO.	ITEM	UNIT	TOTAL QUANTITY	CONSTR. CODE ROADWAY 28 URBAN
59100100	GEOCOMPOSITE WALL DRAIN	SQ YD	140	140
60146304	PIPE UNDERDRAINS FOR STRUCTURES 4"	FOOT	299	299
60218400	MANHOLES, TYPE A, 4'-DIAMETER, TYPE 1 FRAME, CLOSED LID	EACH	5	5
60221100	MANHOLES, TYPE A, 5'-DIAMETER, TYPE 1 FRAME, CLOSED LID	EACH	5	5
60235300	INLETS, TYPE A, TYPE 1 FRAME, CLOSED LID	EACH	1	1
60236200	INLETS, TYPE A, TYPE 8 GRATE	EACH	2	2
60240215	INLETS, TYPE B, TYPE 1 FRAME, CLOSED LID	EACH	1	1
60258200	MANHOLES TO BE RECONSTRUCTED WITH NEW TYPE 1 FRAME, CLOSED LID	EACH	1	1
60266600	VALVE BOXES TO BE ADJUSTED	EACH	8	8
60500060	REMOVING INLETS	EACH	3	3
60600605	CONCRETE CURB, TYPE B	FOOT	190	190
60604400	COMBINATION CONCRETE CURB AND GUTTER, TYPE B-6.18	FOOT	667	667
△ 60617900	PAVED FLUME	SQ YD	25	25
64300430	IMPACT ATTENUATORS (NON-REDIRECTIVE), TEST LEVEL 2	EACH	2	2

∗ SPECIALTY ITEM

△ SPECIAL PROVISIONS

"CONTRACT NO. 87876"

DRAWN BY: JJW	REVISIONS			
CHECKED BY: JKC	LEVEL	BY	DATE	DESCRIPTION
DATE: 12/2023				

Chamlin & Associates

PERU MORRIS
OTTAWA MENDOTA
ILLINOIS

PERU ITEP SHARED USE PATH PROJECT
SECTION 23-00073-00-BT
LASALLE COUNTY

SUMMARY OF QUANTITIES

CONSTRUCTION PLANS

CURRENT AS OF: 12/20/2024
SCALE: AS NOTED
SHEET 8
FILE NO.: 66437.00 Y-
OF 183

		CODE NO.	ITEM	UNIT	TOTAL QUANTITY	CONSTR. CODE ROADWAY 0028 URBAN
		64301090	ATTENUATOR BASE	SQ YD	61	61
		67100100	MOBILIZATION	L SUM	1	1
△		70103815	TRAFFIC CONTROL SURVEILLANCE	CAL DA	2	2
		70107025	CHANGEABLE MESSAGE SIGN	CAL DA	35	35
		70200100	NIGHTTIME WORK ZONE LIGHTING	L SUM	1	1
		70400100	TEMPORARY CONCRETE BARRIER	FOOT	525	525
		70600240	IMPACT ATTENUATORS, TEMPORARY (NON- REDIRECTIVE), TEST LEVEL 2	EACH	4	4
	*	72000100	SIGN PANEL - TYPE 1	SQ FT	3	3
	*	73000100	WOOD SIGN SUPPORT	FOOT	27	27
*		78000400	THERMOPLASTIC PAVEMENT MARKING - LINE 6"	FOOT	172	172
		78300202	PAVEMENT MARKING REMOVAL - WATER BLASTING	SQ FT	53	53
	*	81200230	CONDUIT EMBEDDED IN STRUCTURE, 2" DIA., PVC	FOOT	223	223
	*	84200500	REMOVAL OF LIGHTING UNIT, SALVAGE	EACH	3	3
△		X0322508	PEDESTRIAN TRUSS SUPERSTRUCTURE	SQ FT	2766	2766

* SPECIALTY ITEM

△ SPECIAL PROVISIONS

"CONTRACT NO. 87876"

		CODE NO.	ITEM	UNIT	TOTAL QUANTITY	CONSTR. CODE ROADWAY 0028 URBAN
*	△	X5091725	BICYCLE RAILING (SPECIAL)	FOOT	87	87
	△	X6026050	SANITARY MANHOLES TO BE ADJUSTED	EACH	1	1
	△	X6050176	PLUG EXISTING CULVERTS	EACH	1	1
	△	X7010216	TRAFFIC CONTROL AND PROTECTION, (SPECIAL)	L SUM	1	1
	△	Z0013798	CONSTRUCTION LAYOUT	L SUM	1	1
	△	Z0018002	DRAINAGE SCUPPERS, DS-11	EACH	4	4
#	△	Z0076600	TRAINEES	HOUR	1000	1000
#	△	Z0076604	TRAINEES TRAINING PROGRAM GRADUATE	HOUR	1000	1000

* SPECIALTY ITEM

△ SPECIAL PROVISIONS

0042

"CONTRACT NO. 87876"

DRAWN BY: JJW
CHECKED BY: JKC
DATE: 12/2023

REVISIONS			
LEVEL	BY	DATE	DESCRIPTION

Chamlin & Associates

PERU MORRIS
OTTAWA MENDOTA
ILLINOIS

PERU ITEP SHARED USE PATH PROJECT
SECTION 23-00073-00-BT
LASALLE COUNTY

SUMMARY OF QUANTITIES

CONSTRUCTION PLANS

CURRENT AS OF: 12/20/2024
SCALE: AS NOTED
FILE NO.: 66437.00 Y-

LEGEND

1. HOT-MIX ASPHALT SURFACE COURSE MIX "C" N50 1-1/2"
2. HOT-MIX ASPHALT BINDER COURSE, IL 19.0, N50 2-1/4"
3. AGGREGATE BASE COURSE. TYPE A 8"
4. COMBINATION CONCRETE CURB AND GUTTER TYPE B-6.18
5. PORTLAND CEMENT CONCRETE SIDEWALK, 4"
6. AGGREGATE BASE COURSE, TYPE A, 4"
7. PORTLAND CEMENT CONCRETE PAVEMENT 8"

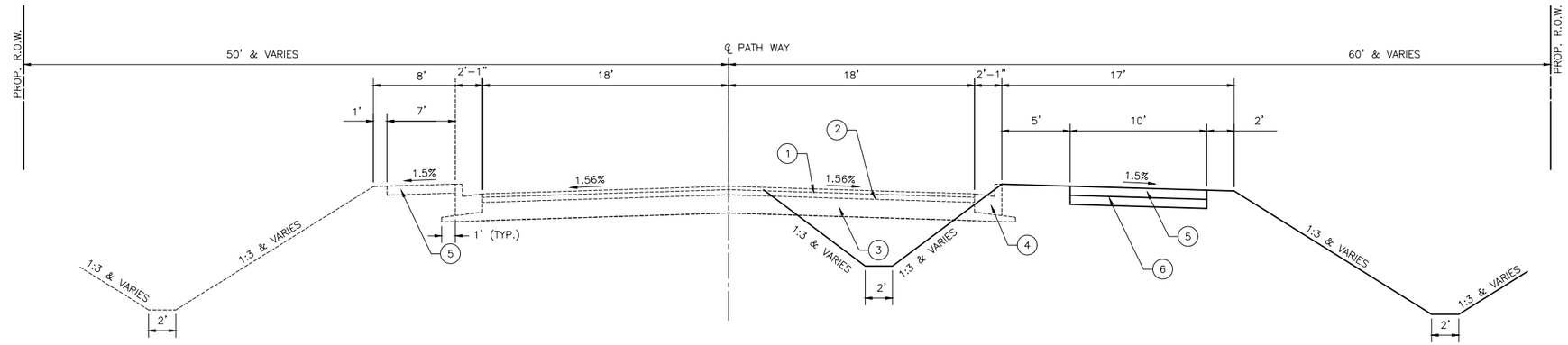

PATH WAY

STA 10+54.40 TO STA. 19+70.50
(DASHED LINES ILLUSTRATE FUTURE ROADWAY)

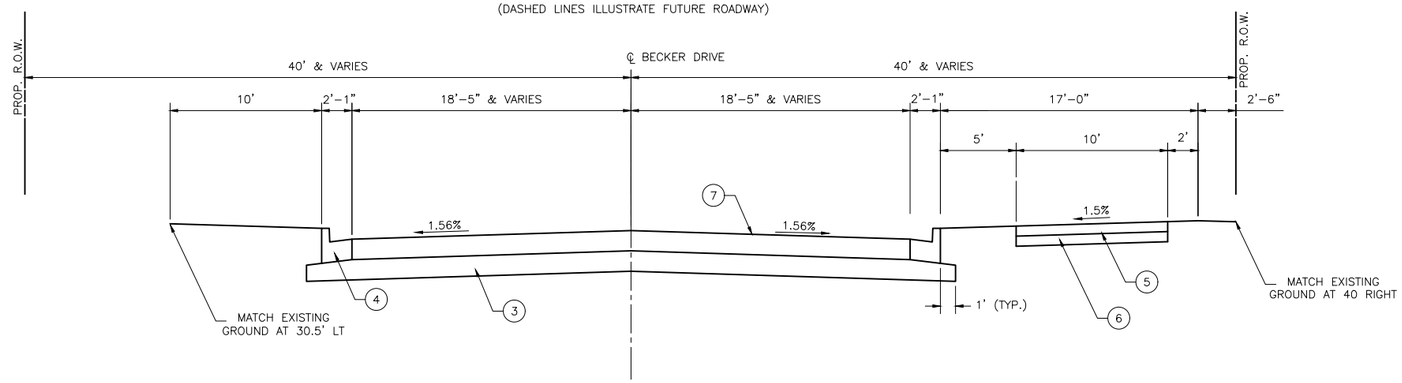

BECKER DRIVE

STA 199+63.20 TO STA 199+93.99

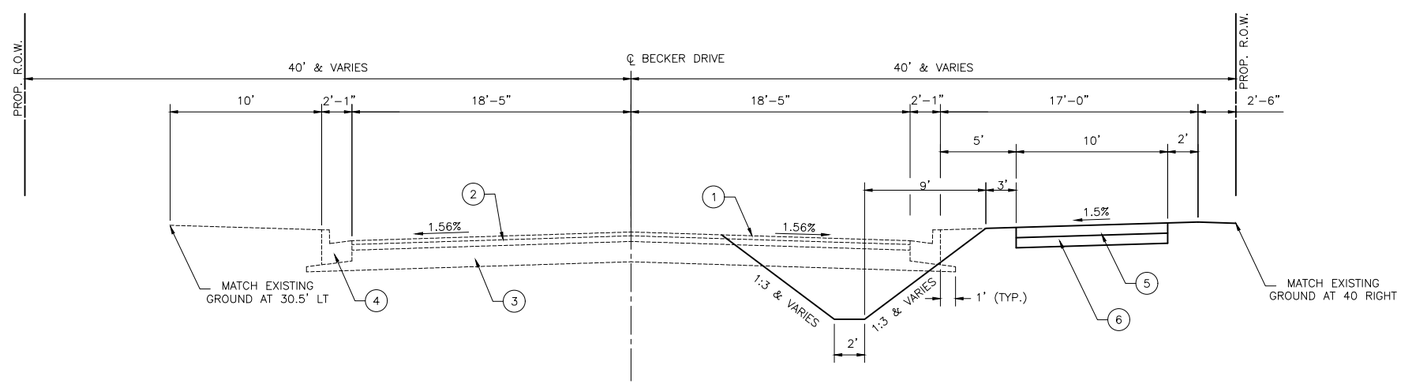

BECKER DRIVE

STA 190+85.35 TO STA 199+63.20
(OMIT DITCH STA 198+25 TO STA 199+63.20)
(DASHED LINES ILLUSTRATE FUTURE ROADWAY)

"CONTRACT NO. 87876"

DRAWN BY: MMG	REVISIONS			
CHECKED BY: JKC	LEVEL	BY	DATE	DESCRIPTION
DATE: 06/2023				

Chamlin & Associates

PERU MORRIS
OTTAWA MENDOTA
ILLINOIS

PERU ITEP SHARED USE PATH PROJECT
SECTION 23-00073-00-BT
LASALLE COUNTY

TYPICAL SECTIONS

CONSTRUCTION PLANS

CURRENT AS OF: 12/20/2024		
SCALE: AS NOTED	SHEET 11	
FILE NO.: 66437.00 Y-	OF 183	

LEGEND

1. HOT-MIX ASPHALT SURFACE COURSE MIX "C" N50 1' 1/2"
2. HOT-MIX ASPHALT BINDER COURSE, IL 19.0, N50 2' 1/4"
3. AGGREGATE BASE COURSE. TYPE A 8"
4. COMBINATION CONCRETE CURB AND GUTTER TYPE B-6.18
5. PORTLAND CEMENT CONCRETE SIDEWALK, 4"
6. AGGREGATE BASE COURSE, TYPE A, 4"

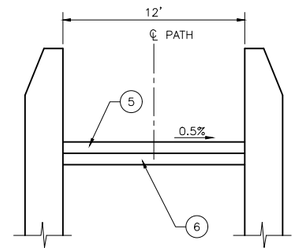

TYPICAL PATH SECTION BETWEEN RETAINING WALL PARAPET

STA. 46+28.35 TO STA. 47+05.56

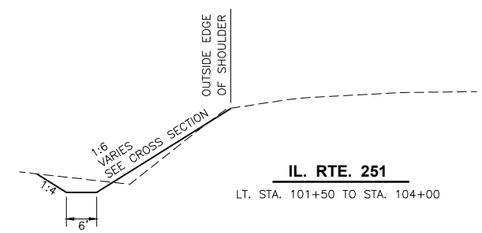

IL. RTE. 251

LT. STA. 101+50 TO STA. 104+00

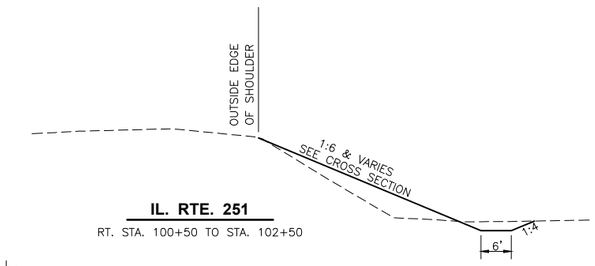

IL. RTE. 251

RT. STA. 100+50 TO STA. 102+50

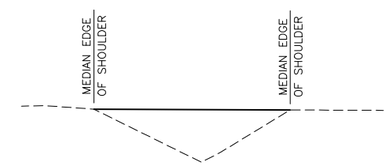

IL. RTE. 251

MEDIAN STA. 101+79 TO STA. 102+50

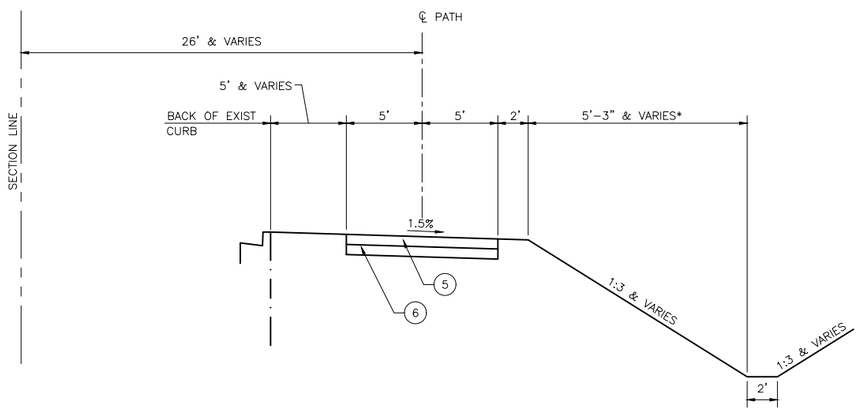

WENZEL ROAD PATH

* 5'-3" WHERE SPECIAL DITCH PROFILES ARE NOT SHOWN
STA. 65+47.34 TO STA. 80+00

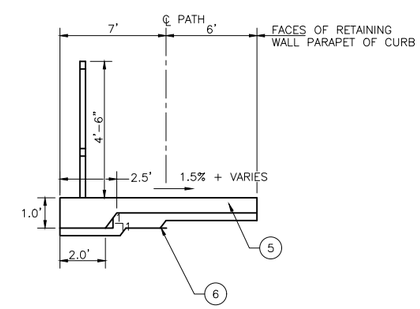

TYPICAL PATH SECTION WITH BICYCLES RAIL

STA. 46+28.35± TO STA. 45+92.56
STA. 53+52.90± TO STA. 54+17.50

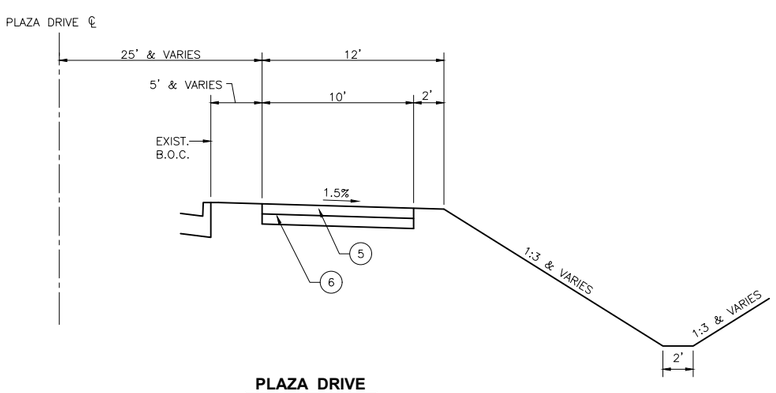

PLAZA DRIVE

STA. 48+50 TO STA. 56+27±

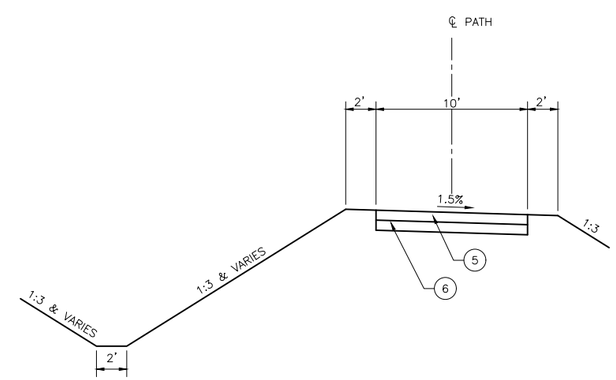

TYPICAL BRIDGE PATH BETWEEN BRIDGE AND BECKER DRIVE

STA. 54+17.90 TO STA. 60+96.44

"CONTRACT NO. 87876"

DRAWN BY: MMG	REVISIONS			
CHECKED BY: JKC	LEVEL	BY	DATE	DESCRIPTION
DATE: 06/2023				

Chamlin & Associates

PERU MORRIS
OTTAWA MENDOTA
ILLINOIS

PERU ITEP SHARED USE PATH PROJECT
SECTION 23-00073-00-BT
LASALLE COUNTY

TYPICAL SECTIONS

CONSTRUCTION PLANS

CURRENT AS OF: 12/20/2024	
SCALE: AS NOTED	SHEET 12
FILE NO.: 66437.00 Y-	OF 183

EARTHWORK SCHEDULE

LOCATION	EARTH EXCAVATION	REMOVAL AND DISPOSAL OF UNSUITABLE MATERIAL	EARTH EXCAVATION ADJUSTED FOR SHRINKAGE	EMBANKMENT	EARTHWORK BALANCE WASTE (+) OR SHORTAGE (-)
	CU. YD.	CU. YD.	CU. YD.	CU. YD.	CU. YD.
PATH WAY - PEORIA ST. TO PLAZA DR.	315.8	2195.1	236.9	1380.2	-1143.4
PLAZA DR.	399.0	1257.1	299.3	1052.2	-753.0
BRIDGE PATH - PLAZA DR. TO IL 251	0.0	0.0	0.0	183.2	-183.2
BRIDGE PATH - IL 251 TO BECKER DR.	194.5	1127.1	145.9	726.7	-580.8
BECKER DR. - BRIDGE PATH TO WENZEL RD.	310.7	1431.1	233.0	624.1	-391.1
WENZEL RD . - BECKER DR. TO STA 80+00	377.2	---	282.9	261.8	21.1
IL 251	9.0	---	6.8	315.0	-308.3
FARM ACCESS ROAD	0.0	109.5	0.0	5.2	-5.2
				QSQS	
TOTAL	**1606**	**6120**	**1205**	**4548**	**-3344**
					FURNISHED

SIGN SCHEDULE

	WOOD SIGN SUPPORT	SIGN PANEL, TYPE 1
	FOOT	SQ. FT.
BRIDGE PATH		
RT STA 46+00 ("WALK BIKE ACROSS BRIDGE" 12X18)	13.5	1.5
RT STA 54+50 ("WALK BIKE ACROSS BRIDGE" 12X18)	13.5	1.5
TOTAL	**27**	**3**

PAVEMENT PATCHING SCHEDULE

LOCATION	TYPE IV, 6 INCH	TYPE II, 14 INCH
	SQ YD	SQ YD
PLAZA DRIVE		
LT STA 47+87.6 TO STA 48+26.9	62	--
BANK PARKING LOT (BRIDGE PATH STA 46+94.2 TO STA 48+57.65)	62	--
PIZZA HUT PARKING LOT (BRIDGE PATH STA 46+95.8 TO STA 48+58.5)	71	--
BECKER DRIVE		
STA 187+47.7 TO STA 190+86.0	134	--
IL 251		
LT STA 101+55	--	18
TOTAL	**329**	**18**

SEEDING SCHEDULE

LOCATION	NITROGEN FERTILIZER NUTRIENT	PHOSPHORUS FERTILIZER NUTRIENT	POTASSIUM FERTILIZER NUTRIENT	SEEDING, CLASS 1A	SEEDING, CLASS 2A	SODDING	SUPPLEMENTAL WATERING	MULCH, METHOD 2	TEMPORARY EROSION CONTROL SEEDING
	POUND	POUND	POUND	ACRE	ACRE	SQ YD	UNIT	ACRE	POUND
PATH WAY - PEORIA ST. TO PLAZA DR.	203	203	203	2.25	----	----	----	2.25	450.2
PLAZA DR.	49	49	49	0.55	----	----	----	0.55	109.5
BRIDGE PATH - PLAZA DR. TO IL 251	12	12	12	----	----	941	5.65	----	38.9
BRIDGE PATH - IL 251 TO BECKER DR.	104	104	104	1.15	----	----	----	1.15	230.2
BECKER DR. - BRIDGE PATH TO WENZEL RD.	112	112	112	1.24	----	----	----	1.24	247.9
WENZEL RD . - BECKER DR. TO STA 80+00	51	51	51	0.57	----	----	----	0.57	114.0
IL 251	35	35	35	----	0.38	----	----	0.38	76.7
TOTAL	**564**	**564**	**564**	**5.76**	**0.38**	**941**	**6.00**	**6.14**	**1267**

PLUG EXISTING CULVERT SCHEDULE

LOCATION	PLUG EXISTING CULVERT
	EACH
PLAZA DRIVE LT STA 48+80.16	1
TOTAL	**1**

TREE REMOVAL SCHEDULE

LOCATION	TREE REMOVAL (6 TO 15 UNITS DIAMETER)	TREE REMOVAL (OVER 15 UNITS DIAMETER)
	UNIT	UNIT
BRIDGE PATH		
STA. 46+63.7, 20.2' RT	8	
STA. 46+96.3, 1.6' LT	12	
STA. 47+49.1, 2.0' LT	12	
STA. 48+07.7, 2.0' LT	12	
STA. 48+59.5, 1.4' LT	12	
STA. 50+85.4, 6.4' LT		16
TOTAL	**56**	**16**

PAVED DITCH REMOVAL SCHEDULE

LOCATION	PAVED DITCH REMOVAL
	FOOT
PLAZA DR.	
LT STA 48+10.9	17.1
RT STA 50+50.9	16.7
RT STA 52+75.8	17.8
TOTAL	**51.6**

PAVED FLUME SCHEDULE

LOCATION	PAVED FLUME
	SQ YD
PLAZA DR.	
RT STA 50+50.9	11.9
RT STA 52+75.8	12.9
TOTAL	**25**

PIPE CULVERT REMOVAL SCHEDULE

LOCATION	PIPE CULVERT REMOVAL
	FOOT
WENZAL ROAD	
STA 67+50.65	28
STA 68+96.4	24
STA 76+97.1	45
TOTAL	**97**

STORM SEWER REMOVAL SCHEDULE

LOCATION	STORM SEWER REMOVAL 12"	STORM SEWER REMOVAL 15"	REMOVING INLETS
	FOOT	FOOT	EACH
WENZEL ROAD			
RT STA 72+32	----	20	1
RT STA 78+23.5	23	----	1
PLAZA DRIVE	----	8	1
RT STA 55+69			
TOTAL	**23**	**28**	**3**

CULVERT SCHEDULE

LOCATION	PIPE CULVERTS, CLASS A, TYPE 1 15"	TRENCH BACKFILL	PRECAST REINFORCED CONCRETE FLARED END SECTIONS 15"
	FOOT	CU YD	EACH
WENZAL ROAD			
STA 67+50.65	28	2.3	2
STA 68+96.4	24	2.6	2
STA 76+97.1	43	4.2	2
TOTAL	**95**	**9**	**6**

"CONTRACT NO. 87876"

DRAWN BY: DS	REVISIONS			PERU MORRIS OTTAWA MENDOTA ILLINOIS	PERU ITEP SHARED USE PATH PROJECT SECTION 23-00073-00-BT LASALLE COUNTY
CHECKED BY: JKC	LEVEL / BY / DATE / DESCRIPTION				
DATE: 12/2023					

Chamlin & Associates

SCHEDULE OF QUANTITIES

CONSTRUCTION PLANS

CURRENT AS OF: 12/20/2024

SCALE: AS NOTED

SHEET 13 OF 183

FILE NO.: 66437.00 Y-

FIRE HYDRANT SCHEDULE

LOCATION	FIRE HYDRANT EXRENTION FOOT
WENZEL ROAD	
RT STA 68+35.9	2
RT STA 78+97.7	2
TOTAL	**4**

TRAFFIC CONTROL SCHEDULE

LOCATION	CHANGEABLE MESSAGE SIGN CAL DA	TEMPORARY CONCRETE BARRIER FOOT	IMPACT ATTENUATORS, TEMPORARY (NON-REDIRECTIVE), TEST LEVEL 2 EACH
IL 251 SOUTHBOUND	7	262.5	2
IL 251 NORHTBOUND	---	262.5	2
MIDTOWN ROAD	7	---	—
PEORIA STREET	14	---	—
WENZEL ROAD	7	---	—
TOTAL	**35**	**525.0**	**4**

SIDEWALK SCHEDULE

LOCATION	PORTLAND CEMENT CONCRETE SIDEWALK, 4 INCH SQ FT	AGGREGATE BASE COURSE, TYPE A TON	DETECTABLE WARNINGS SQ FT
PATHWAY			
STA 10+54.00 TO STA 19+70.50	9161.0	231.9	20.0
PLAZA DRIVE			
PATHWAY TO HY-VEE ENTRANCE	7947.7	201.1	24.9
PLAZA DR. TO BRIDGE PATH STA 45+99.31	361.2	9.1	20.0
BRIDGE PATH			
STA 53+52.90 TO BECKER DR.	7577.4	191.8	
BECKER DRIVE			
BRIDGE PATH TO WENZEL ROAD	8642.8	218.7	
WENZEL ROAD			
BECKER DR. TO MARQUETTE RD.	8052.4	203.8	27.0
MARQUETTE RD. TO STA 80+00	5192.4	131.4	27.3
TOTAL	**46935**	**1188**	**119**

TEMPORARY / PERMANENT EROSION CONTROL SCHEDULE

LOCATION	TEMPORARY DITCH CHECKS FOOT	PERIMETER EROSION BARRIER FOOT	INLET AND PIPE PROTECTION EACH
PATHWAY			
RT STA 12+00	18		
RT STA 14+50	18		
RT STA 17+00	18		
RT STA 19+50	9		
RT STA 19+60			1
PLAZA DRIVE			
LT STA 47+96	—	---	1
RT STA 49+18	—	---	1
RT STA 50+20	9	---	—
RT STA 52+00	9	---	—
RT STA 53+73	—	---	1
BRIDGE PATH			
LT STA 51+52 TO LT 60+25	—	890	
LT STA 53+00	9	---	—
LT STA 54+50	9	---	—
LT STA 56+00	9	---	—
LT STA 57+50	9	---	—
LT STA 59+00	9	---	—
LT STA 60+ 76	—	---	1
BECKER DRIVE			
RT STA 193+00	9	---	—
RT STA 194+50	9	---	—
RT STA 196+00	9	---	—
RT STA 197+50	9	---	—
WENZEL ROAD			
RT STA 67+30	—	---	1
RT STA 68+78	—	---	1
RT STA 70+00	9	---	—
RT STA 71+75	9	---	—
RT STA 72+32	—	---	1
RT STA 76+69	—	---	1
RT STA 77+80	9	---	—
RT STA 78+23.5	—	---	1
IL 251			
STA 101+55	—	---	1
RT STA 102+50	12	---	—
STA 103+00	12	---	—
LT STA 103+50	12	---	—
TOTAL	**162**	**890**	**10**

DRIVEWAY SCHEDULE

LOCATION	NEW DRIVEWAY WIDTH FOOT	DRIVEWAY PAVEMENT REMOVAL SQ YD	PCC DRIVEWAY PAVEMENT 6" SQ YD	AGGREGATE FOR TEMPORARY ACCESS TON
WENZAL ROAD				
STA 65+63.4	24	60.0	67.0	----
STA 67+50.65	16	84.3	59.2	----
STA 68+96.4	14	51.6	49.1	16.8
STA 74+93.2	24	77.6	76.9	26.3
STA 76+97.1	26	94.7	85.9	29.3
STA 79+69.35	28	93.2	89.4	30.5
TOTAL	**INFO ONLY**	**401**	**360**	**103**

PAVEMENT SCHEDULE

LOCATION	PORTLAND CEMENT CONCRETE PAVEMENT 8" SQ YD	AGGREGATE BASE COURSE, TYPE A TON
BECKER DRIVE		
STA 199+63.2 TO STA 199+93.99	169.0	77.0
TOTAL	**169**	**77**

SIDEWALK REMOVAL SCHEDULE

LOCATION	SIDEWALK REMOVAL SQ FT
WENZEL ROAD	
BECKER DR. TO MARQUETTE RD.	4159.4
MARQUETTE RD. TO STA 80+00	2547.3
TOTAL	**6707**

AGGREGATE SURFACE COURSE SCHEDULE

LOCATION	AGGREGATE SURFACE COURSE, TYPE A TON
FARM ACCESS ROAD	245
TOTAL	**245**

"CONTRACT NO. 87876"

DRAWN BY: DS
CHECKED BY: JKC
DATE: 12/2023

REVISIONS

LEVEL	BY	DATE	DESCRIPTION

Chamlin & Associates

PERU MORRIS
OTTAWA MENDOTA
ILLINOIS

PERU ITEP SHARED USE PATH PROJECT
SECTION 23-00073-00-BT
LASALLE COUNTY

SCHEDULE OF QUANTITIES

CONSTRUCTION PLANS

CURRENT AS OF: 12/20/2024
SCALE: AS NOTED
SHEET 14
FILE NO.: 66437.00 Y-
OF 183

VALVE BOX SCHEDULE

LOCATION	VALVE BOXES TO BE ADJUSTED
	EACH
PLAZA DRIVE	
RT STA 49+26.4	1
RT STA 49+47.9	1
RT STA 51+25.0	1
RT STA 52+48.5	1
RT STA 53+11.0	1
RT STA 53+14.5	1
WENZEL ROAD	
RT STA 68+35.6	1
RT STA 78+97.9	1
TOTAL	**8**

ADJUSTING WATER MAIN SCHEDULE

LOCATION	ADJUSTING WATER MAIN 8"
	FOOT
BRIDGE PATH	
STA 54+90	22
TOTAL	**22**

BICYCLE RAILING SCHEDULE

LOCATION	BICYCLE RAILING (SPECIAL)
	FOOT
BRIDGE PATH	
RT STA 46+05.9 TO STA 46+27.8	22
LT STA 53+53.5 TO STA 54+17.9	65
TOTAL	**87**

LIGHTING REMOVAL SCHEDULE

LOCATION	REMOVAL OF LIGHTING UNIT, SALVAGE
	EACH
BRIDGE PATH	
LT STA 47+17	1
RT STA 48+22	1
LT STA 48+38	1
TOTAL	**3**

PAVEMENT MARKING SCHEDULE

LOCATION	THERMOPLASTIC PAVEMENT MARKING LINE 6"	PAVEMENT MARKING REMOVAL - WATER BLASTING
	FOOT	SQ. FT.
PLAZA DRIVE CROSSWALK	72	---
MARQUETTE STREET CROSSWALK	100	53
---	---	---
TOTAL	**172**	**53**

MANHOLE RECONSTRUCTION SCHEDULE

LOCATION	MANHOLES TO BE RECONSTRUCTED WITH NEW TYPE 1 FRAME, CLOSED LID
	EACH
BRIDGE PATH	
STA 46+56.5	1
TOTAL	**1**

ATTENUATOR SCHEDULE

LOCATION	ATTENUATOR BASE	IMPACT ATTENUATORS (NON-REDIRECTIVE), TEST LEVEL 2
	SQ YD	EACH
IL 251 MEDIAN AT BRIDGE PIER	61	2
TOTAL	**61**	**2**

CONCRETE CURB AND GUTTER SCHEDULE

LOCATION	COMBINATION CURB AND GUTTER REMOVAL	CURB REMOVAL	CONCRETE CURB, TYPE B	COMBINATION CONCRETE CURB AND GUTTER, TYPE B-6.18
	FOOT	FOOT	FOOT	FOOT
PLAZA DRIVE				
LT STA 47+87.8 TO STA 48+71.45	79.1	---	---	79.1
RT STA 48+17.79 TO STA 48+26.90	9.2	---	---	9.2
RT STA 48+69.88 TO STA 48+81.31	20	---	---	20
RT STA 50+46.90 TO STA 50+54.96	8	---	---	8
RT STA 52+71.70 TO STA 52+79.97	8	---	---	8
RT STA 52+91.11 TO STA 53+01.46	10	---	---	10
RT STA 53+87.63 TO STA 53+97.98	10	---	---	10
HY-VEE ENTRANCE	---	16.5	16.5	---
BANK PARING LOT (BRIDGE PATH STA 46+90.8 TO STA 48+57.6)	170.5	---	---	170.5
PIZZA HUT PARKING (BRIDGE PATH STA 46+95.6 TO STA 48+58.6)	---	163.4	163.4	---
PIZZA HUT ENTRANCE	---	9.8	9.8	---
WENZEL ROAD				
LT STA 64+43.5 TO LT STA 65+46.9	103.4			
LT STA 64+43.5 TO RT STA 64+73.5				45.2
RT STA 65+10.4 TO LT STA 65+40.4				45.9
LT STA 65+46.9 TO LT STA 65+79.8	32.9			32.9
LT STA 67+36.2 TO STA 67+65.1	28.9	---	---	28.9
LT STA 68+82.9 TO STA 69+09.9	27	---	---	27
LT STA 73+42.5 TO RT STA 73+53.9	17.4	---	---	17.4
RT STA 73+95.4 TO LT STA 74+07.1	17.6	---	---	17.6
LT STA 74+74.6 TO STA 75+11.8	37.2	---	---	37.2
LT STA 76+71.2 TO STA 77+24.8	53.6	---	---	53.6
LT STA 79+46.3 TO STA 79+92.4	46.1	---	---	46.1
TOTAL	679	190	190	667

SANITARY MANHOLE SCHEDULE

LOCATION	SANITARY MANHOLES TO BE ADJUSTED
	EACH
WENZAL ROAD	
STA 69+44	1
TOTAL	**1**

"CONTRACT NO. 87876"

DRAWN BY: DS
CHECKED BY: JKC
DATE: 12/2023

REVISIONS

LEVEL	BY	DATE	DESCRIPTION

Chamlin & Associates

PERU MORRIS
OTTAWA MENDOTA
ILLINOIS

PERU ITEP SHARED USE PATH PROJECT
SECTION 23-00073-00-BT
LASALLE COUNTY

SCHEDULE OF QUANTITIES

CONSTRUCTION PLANS

CURRENT AS OF: 12/20/2024
SCALE: AS NOTED
SHEET 15
FILE NO.: 66437.00 Y-
OF 183

STORM SEWER STRUCTURE SCHEDULE

STRUCTURE NUMBER	STATION	OFFSET	RIM ELEV.	FLOW LINE ELEVATION NORTH	SOUTH	EAST	WEST	PRECAST REINFORCED CONCRETE FLARED END SECTIONS, 12" EACH	PRECAST REINFORCED CONCRETE FLARED END SECTIONS, 18" EACH	END SECTIOS 24" EACH	FLUSH INLET BOX FOR MEDIAN, STANDARD 542546 EACH	INLET BOX , STANDARD 542501 EACH	MANHOLES, TYPE A, 4'-DIAMETER, TYPE 1 FRAME, CLOSED LID EACH	MANHOLES, TYPE A, 5'-DIAMETER, TYPE 1 FRAME, CLOSED LID EACH	INLETS, TYPE A, TYPE 1 FRAME, CLOSED LID EACH	INLETS, TYPE B, TYPE 1 FRAME, CLOSED LID EACH	INLETS, TYPE A, TYPE 8 GRATE EACH	REMARKS
1	10+64.70	46.00' RT	–	–	639.91	–	--	1	–	--	–	--	–	--	--	–	--	
1A	10+64.68	20.08' RT	642.50	–	640.04	–	--	–	–	--	–	--	–	--	1	–	--	
2	19+59.65	49.08' RT	–	–	636.22	–	--	1	–	--	–	--	–	--	--	–	--	
3	19+59.69	20.08' RT	640.09	636.52	636.52	–	--	–	–	--	–	--	–	--	--	1	--	
4	19+59.65	7.11' RT	–	–	636.62	–	--	1	–	--	–	--	–	--	--	–	--	
5	19+82.30	53.19' RT	–	–	636.69	–	--	–	1	--	–	--	–	--	--	–	--	
6	20+19.99	32.41' LT	641.23	–	638.31	638.31	--	–	–	--	–	--	1	--	--	–	--	
7	46+37.45	15.40' LT	–	–	--	638.86	--	–	1	--	–	--	–	--	--	–	--	
8	49+20.93	50.00' RT	–	–	635.55	–	--	–	1	--	–	--	–	--	--	–	--	
9	50+11.48	36.29' RT	639.80	635.35	635.35	–	--	–	–	--	–	--	1	--	--	–	--	
10	52+40.30	35.58' RT	639.51	634.86	634.86	–	--	–	–	--	–	--	1	--	--	–	--	
11	53+79.88	33.09' RT	639.43	634.57	634.57	–	--	–	–	--	–	--	–	1	--	–	--	
11A	53+72.72	46.56' RT	–	–	--	635.38	--	–	1	--	–	--	–	--	--	–	--	
12	54+76.98	37.14' RT	639.16	634.30	634.30	–	--	–	–	--	–	--	1	--	--	–	--	
13	55+68.65	30.08' RT	638.79	634.03	--	634.03	--	–	–	--	–	--	–	1	--	–	--	
14	48+79.52	18.69' RT	640.88	636.93	636.93	–	--	–	–	--	–	--	–	1	--	–	--	+/- MATCH EXISTING
15	48+69.49	5.33' LT	640.66	636.93	636.93	–	--	–	–	--	–	--	–	1	--	–	--	+/- MATCH EXISTING
16	101+55	60.1' LT	642.60	–	--	–	640.90	–	–	1	–	--	–	--	--	–	--	
17	101+55	2.00' LT	–	–	--	641.52	--	–	–	--	–	1	–	--	--	–	--	13'-8" LONG
18	**NOT USED**	–	–	–	--	–	--	–	–	--	–	--	–	--	--	–	--	
19	**NOT USED**	–	–	–	--	–	--	–	–	--	–	--	–	--	--	–	--	
20	187+51.00	12.71' RT	638.62	632.14	--	–	--	–	–	--	–	--	–	1	--	–	--	
21	191+19.58	13.49' RT	639.94	–	633.22	–	--	–	–	--	–	--	1	--	--	–	--	
22	191+22.31	9.41' RT	636.33	–	--	633.27	--	–	–	--	1	--	–	--	--	–	--	
23	72+32.01	14.48' RT	638.25	635.75	--	–	--	–	–	--	–	--	–	--	--	–	1	
24	78+24.52	17.90' RT	637.50	635.00	--	–	--	–	–	--	–	--	–	--	--	–	1	
							TOTAL	3	4	1	1	1	5	5	1	1	2	

"CONTRACT NO. 87876"

DRAWN BY: DS
CHECKED BY: JKC
DATE: 12/2023

REVISIONS

LEVEL	BY	DATE	DESCRIPTION

Chamlin & Associates

PERU MORRIS
OTTAWA MENDOTA
ILLINOIS

PERU ITEP SHARED USE PATH PROJECT
SECTION 23-00073-00-BT
LASALLE COUNTY

SCHEDULE OF QUANTITIES

CONSTRUCTION PLANS

CURRENT AS OF: 12/20/2024
SCALE: AS NOTED
SHEET 16
FILE NO.: 66437.00 Y–
OF 183

STORM SEWER PIPE SCHEDULE

*- LENGTH CENTER TO CENTER OF STRUCTURE OR TO END OF END SECTION					STORM SEWERS, CLASS A, TYPE 1			STORM SEWERS, CLASS A, TYPE 2	STORM SEWERS RUBBER GASKET, CLASS, TYPE 1	TRENCH BACKFILL
PIPE NUMBER	FROM	TO	* LENGTH	% GRADE	12" FOOT	18" FOOT	24" FOOT	18" FOOT	18 INCH FOOT	CU YD
1	1	1A	27.0	0.48%	20.17	–	–	--	--	2.2
2	2	3	30.0	1.00%	22.58	–	–	--	--	3.8
3	3	4	12.0	0.83%	4.58	–	–	--	--	–
4	5	6	93.5	1.73%	--	85.69	–	--	--	8.6
5	6	7	30.3	1.81%	--	22.48	–	--	--	3.4
6	8	9	95.7	0.21%	--	87.89	–	--	--	–
7	9	10	228.6	0.21%	--	225.05	–	--	--	78.9
8	10	11	134.9	0.22%	--	130.43	–	--	--	13.9
9	11A	11	15.0	5.39%	--	6.65	–	--	--	3.0
10	11	12	89.1	0.30%	--	85.04	–	--	--	19.2
11	12	13	89.1	0.30%	--	84.98	–	--	--	33.3
11A	13	EX MH	10.6	0.85%	--	–	–	--	9	2.3
12	14	15	26.0	0.00%	--	21.41	–	--	--	–
13	16	17	66.1	0.94%	--	–	45.33	--	--	4.3
14	**NOT USED**		–	–	--	–	–	--	--	–
15	**NOT USED**		–	–	--	–	–	--	--	–
16	20	21	367.6	0.29%	--	–	–	363.51	--	280.5
17	21	22	4.8	1.04%	--	–	–	2.8	--	–
18	23	EX INL	25.5	1.65%	23.95	–	–	--	--	8.7
19	24	EX INL	27.0	1.67%	25.52	–	–	--	--	9.1
				TOTAL	**97**	**750**	**45**	**366**	**9**	**471.2**

"CONTRACT NO. 87876"

DRAWN BY: DS
CHECKED BY: JKC
DATE: 12/2023

REVISIONS			
LEVEL	BY	DATE	DESCRIPTION

Chamlin & Associates

PERU MORRIS
OTTAWA MENDOTA
ILLINOIS

PERU ITEP SHARED USE PATH PROJECT
SECTION 23-00073-00-BT
LASALLE COUNTY

SCHEDULE OF QUANTITIES

CONSTRUCTION PLANS

CURRENT AS OF: 12/20/2024
SCALE: AS NOTED
SHEET 17
FILE NO.: 66437.00 Y–
OF 183

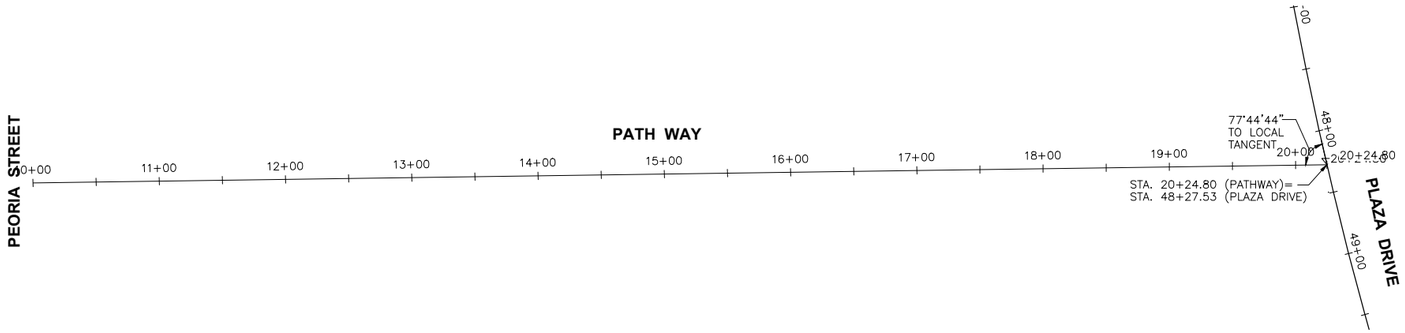

GRAPHIC SCALE
0 30 60
(IN FEET)

N

PATH WAY			
STATION	NORTHING	EASTING	REMARKS
10+00.00	1706849.0331	765495.6071	
10+50.00	1706849.7402	765545.6021	
11+00.00	1706850.4473	765595.5971	
11+50.00	1706851.1543	765645.5921	
12+00.00	1706851.8614	765695.5871	
12+50.00	1706852.5685	765745.5821	
13+00.00	1706853.2756	765795.5771	
13+50.00	1706853.9827	765845.5721	
14+00.00	1706854.6897	765895.5671	
14+50.00	1706855.3968	765945.5621	
15+00.00	1706856.1039	765995.5571	
15+50.00	1706856.8110	766045.5521	
16+00.00	1706857.5180	766095.5471	
16+50.00	1706858.2251	766145.5421	
17+00.00	1706858.9322	766195.5371	
17+50.00	1706859.6393	766245.5321	
18+00.00	1706860.3464	766295.5271	
18+50.00	1706861.0534	766345.5221	
19+00.00	1706861.7605	766395.5171	
19+50.00	1706862.4676	766445.5121	
20+00.00	1706863.1747	766495.5071	
20+24.80	1706863.5253	766520.3	INTERSECTION

CURVE 1
DELTA=5°40'51"
R=3040.00'
T=150.83'
L= 301.41'
CHORD
S 13°28'20" E
301.28'
P.C. STA. 46+98.45
P.I. STA. 48+49.28
P.T. STA. 49+99.86

CURVE 2
DELTA=1°56'17"
R=2960.35'
T=50.07'
L= 100.14'
CHORD
S 15°20'36" E
100.13'
P.C.C. STA. 49+99.86
P.I. STA. 50+49.93
P.T. STA. 51+00.00

CURVE 3
DELTA=1°22'46"
R=6109.65'
T=73.55'
L= 147.08'
CHORD
S 15°04'55" E
147.08'
P.C.C. STA. 51+00.00
P.I. STA. 51+73.55
P.T. STA. 52+47.08

CURVE 4
DELTA=32°46'03"
R=600.00'
T=176.40'
L=343.14'
CHORD
S 0°36'43" W
338.48'
P.C.C. STA. 52+47.08
P.I. STA. 54+23.48
P.T. STA. 55+90.22

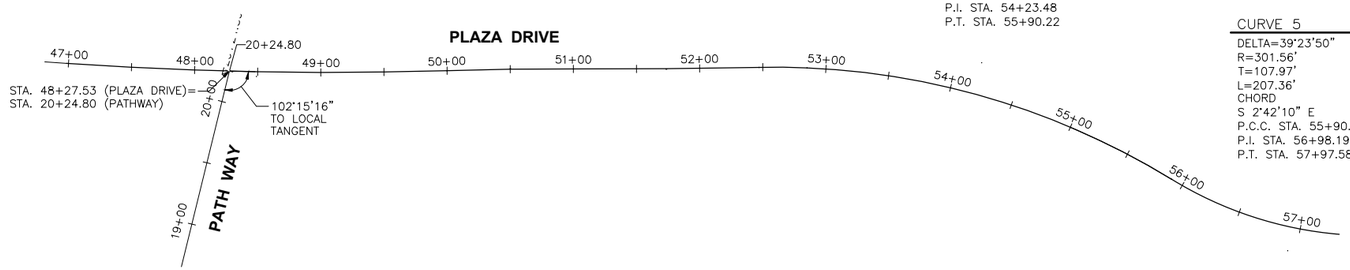

CURVE 5
DELTA=39°23'50"
R=301.56'
T=107.97'
L=207.36'
CHORD
S 2°42'10" E
P.C.C. STA. 55+90.22
P.I. STA. 56+98.19
P.T. STA. 57+97.58

N

GRAPHIC SCALE
0 30 60
(IN FEET)

PLAZA DRIVE			
STATION	NORTHING	EASTING	REMARKS
47+00.00	1706988.3237	766494.0855	
47+50.00	1706939.2651	766503.739	
48+00.00	1706890.3718	766514.1981	
48+50.00	1706841.6572	766525.4599	
49+00.00	1706793.1343	766537.5213	
49+50.00	1706744.8165	766550.3792	
50+00.00	1706696.7166	766564.03	
50+50.00	1706648.6124	766577.6657	
51+00.00	1706600.2848	766590.4869	
51+50.00	1706551.9054	766603.113	
52+00.00	1706503.6309	766616.1346	
52+47.08	1706458.2704	766628.7576	PC
52+50.00	1706455.4625	766629.5433	
53+00.00	1706406.7790	766640.8776	
53+50.00	1706357.3210	766648.1204	
54+00.00	1706307.4317	766651.2212	
54+50.00	1706257.4575	766650.1587	
55+00.00	1706207.7451	766644.9402	
55+50.00	1706158.6396	766635.6019	
55+90.23	1706119.8061	766625.1418	PCC
56+00.00	1706110.4135	766622.4366	
56+50.00	1706061.2894	766613.4306	
57+00.00	1706011.3527	766612.656	

BENCHMARKS

BM "A" CHISELED "X" ON EAST BOLT OF FIRE HYDRANT WEST SIDE OF PLAZA DR. 50'± NORTH ENTRANCE TO HY-VEE
ELEV.= 640.37

BM "B" TOP OF 3/8" BOLT ON FIRE HYDRANT EAST SIDE OF PEORIA ST. AND NORTH OF ENTRANCE TO WATER STORE
ELEV.= 642.96

BM "C" CHISELED "X" ON EAST BOLT OF FIRE HYDRANT WEST SIDE OF PLAZA DR. 50'± NORTH OF SOUTH ENTRANCE TO FINANCIAL PLUS.
ELEV.= 641.91

BM "D" CHISELED "X" ON EAST BOLT OF FIRE HYDRANT WEST SIDE OF PLAZA DR. SOUTH OF NORTH ENTRANCE TO PIZZA HUT
ELEV.= 642.62

BM "E" CHISELED "X" ON EAST BOLT OF FIRE HYDRANT WEST SIDE OF PLAZA DR. AT NORTH END OF PLAZA DR.
ELEV. = 643.87

BM 50 CHISELED "X" ON CONCRETE LIGHT POLE FACING EAST. LOCATED WEST OF PLAZA DRIVE IN FRONT OF HY-VEE NEAR TESLA CHARGING STATIONS
ELEV.= 640.94

BM 52 CHISELED "X" ON CONCRETE BASE OF BARD OPTICAL SIGN FACING NORTH
ELEV.= 644.79

BM 53 CHISELED "X" ON CONCRETE BASE OF LIGHT POLE FACING NORTH. LOCATED IN NORTH EAST END OF LIBERTY VILLAGE PARKING LOT JUST SOUTH OF CROP LINE
ELEV.= 642.93

BM1 RAILROAD SPIKE IN POWER POLE NORTH SIDE OF WENZEL ROAD AT SOUTHEAST CORNER OF O'REILLY'S
ELEV.= 641.95

BM FH "X" ON SOUTHWEST BOLT ON FIRE HYDRANT ON THE SOUTH SIDE OF WENZEL ROAD, WEST OF BROOKSIDE DR.
ELEV.= 640.57

"CONTRACT NO. 87876"

DRAWN BY: DS	REVISIONS			
CHECKED BY: JKC	LEVEL	BY	DATE	DESCRIPTION
DATE: 06/2023				

Chamlin & Associates

PERU MORRIS
OTTAWA MENDOTA
ILLINOIS

PERU ITEP SHARED USE PATH PROJECT
SECTION 23-00073-00-BT
LASALLE COUNTY

PATH WAY AND PLAZA DRIVE
HORIZONTAL AND VERTICAL CONTROL

CONSTRUCTION PLANS

CURRENT AS OF: 12/20/2024
SCALE: AS NOTED
FILE NO.: 66437.00 Y-
SHEET 18 OF 183

BRIDGE PATH			
STATION	NORTHING	EASTING	REMARKS
45+77.04	1706836.688	766547.3216	
45+87.00	1706839.036	766557.042	PI
46+00.00	1706851.653	766554.0791	
46+35.42	1706886.179	766545.9709	PI
46+50.00	1706889.122	766560.2042	
47+00.00	1706899.245	766609.1687	
47+50.00	1706909.369	766658.1331	
48+00.00	1706919.492	766707.0976	
48+50.00	1706929.615	766756.062	
49+00.00	1706939.739	766805.0265	
49+20.25	1706943.839	766824.8582	PI
49+50.00	1706941.06	766854.477	
50+00.00	1706936.39	766904.2584	
50+50.00	1706931.72	766954.0398	
51+00.00	1706927.049	767003.8212	
51+50.00	1706922.379	767053.6026	
51+72.62	1706920.267	767076.1192	PI
52+00.00	1706920.267	767103.5038	
52+50.00	1706920.267	767153.5038	
53+00.00	1706920.267	767203.5038	
53+50.00	1706920.267	767253.5038	
54+00.00	1706920.267	767303.5038	
54+50.00	1706920.267	767353.5038	
55+00.00	1706920.267	767403.5038	
55+50.00	1706920.267	767453.5038	
56+00.00	1706920.267	767503.5038	
56+37.88	1706920.267	767541.386	PI
56+50.00	1706920.258	767553.5038	
57+00.00	1706920.221	767603.5038	
57+50.00	1706920.184	767653.5037	
58+00.00	1706920.148	767703.5037	
58+50.00	1706920.111	767753.5037	
59+00.00	1706920.074	767803.5037	
59+50.00	1706920.038	767853.5037	
60+00.00	1706920.001	767903.5037	
60+50.00	1706919.964	767953.5037	
60+96.91	1706919.93	768000.4183	

BECKER DRIVE			
STATION	NORTHING	EASTING	REMARKS
187+00.00	1706517.117	767967.6539	
187+50.00	1706567.116	767967.9273	
188+00.00	1706617.115	767968.2007	
188+50.00	1706667.114	767968.4741	
189+00.00	1706717.114	767968.7475	
189+50.00	1706767.113	767969.0209	
190+00.00	1706817.112	767969.2943	
190+50.00	1706867.111	767969.5676	
190+85.35	1706902.461	767969.7609	PC
191+00.00	1706917.108	767969.5345	FUTURE BECKER DR
191+50.00	1706966.776	767964.1586	FUTURE BECKER DR
192+00.00	1707015.172	767951.7662	FUTURE BECKER DR
192+30.11	1707043.286	767941.0193	PRC-FUTURE BECKER DR
192+50.00	1707061.759	767933.6473	FUTURE BECKER DR
193+00.00	1707109.773	767919.8478	FUTURE BECKER DR
193+50	1707159.262	767913.0247	FUTURE BECKER DR
193+76.08	1707185.326	767912.2864	PT-FUTURE BECKER DR
194+00.00	1707209.245	767912.5002	FUTURE BECKER DR
194+50.00	1707259.243	767912.947	FUTURE BECKER DR

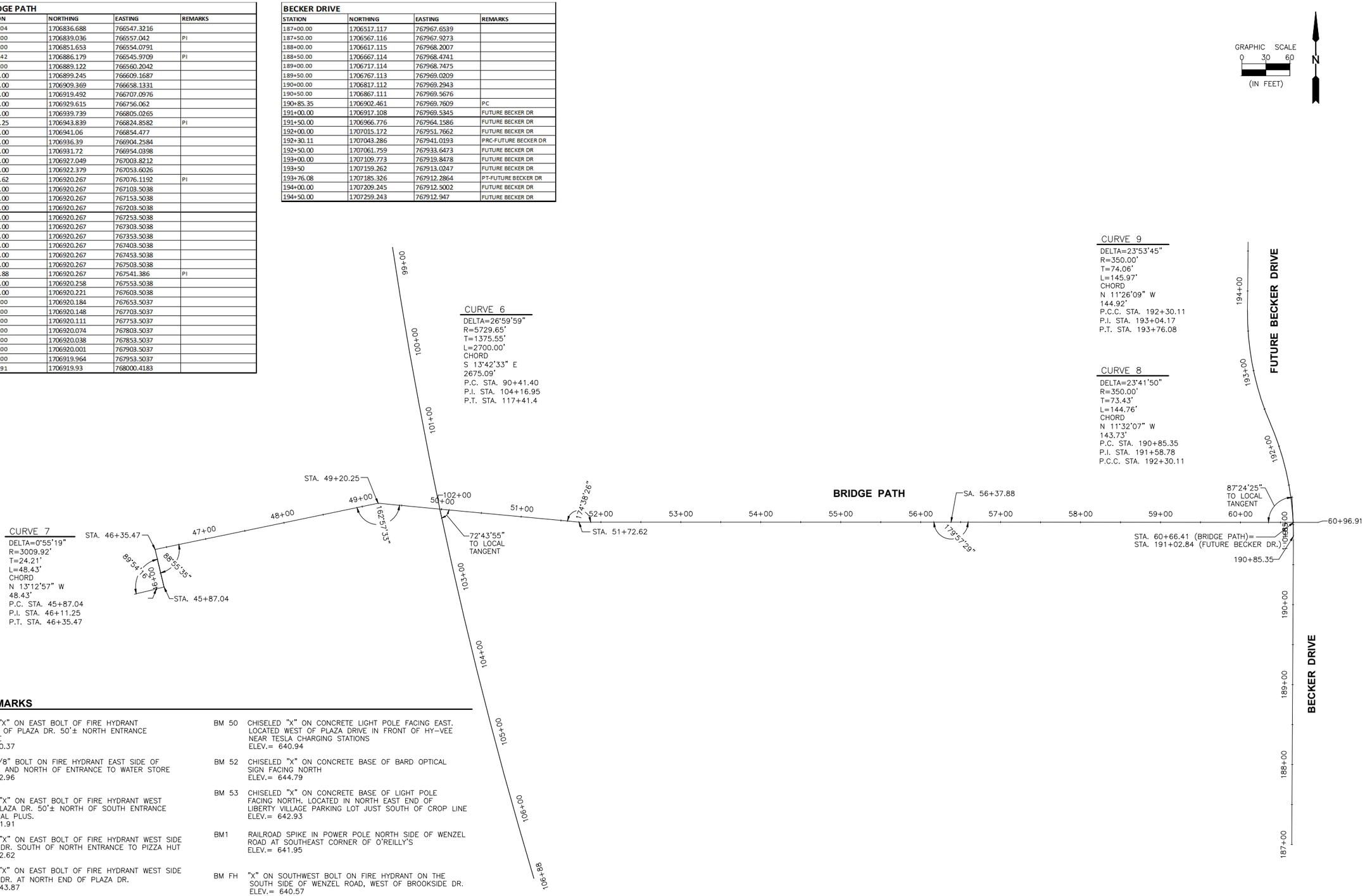

BENCHMARKS

BM "A" CHISELED "X" ON EAST BOLT OF FIRE HYDRANT WEST SIDE OF PLAZA DR. 50'± NORTH ENTRANCE TO HY-VEE
ELEV.= 640.37

BM "B" TOP OF 3/8" BOLT ON FIRE HYDRANT EAST SIDE OF PEORIA ST. AND NORTH OF ENTRANCE TO WATER STORE
ELEV.= 642.96

BM "C" CHISELED "X" ON EAST BOLT OF FIRE HYDRANT WEST SIDE OF PLAZA DR. 50'± NORTH OF SOUTH ENTRANCE TO FINANCIAL PLUS.
ELEV.= 641.91

BM "D" CHISELED "X" ON EAST BOLT OF FIRE HYDRANT WEST SIDE OF PLAZA DR. SOUTH OF NORTH ENTRANCE TO PIZZA HUT
ELEV.= 642.62

BM "E" CHISELED "X" ON EAST BOLT OF FIRE HYDRANT WEST SIDE OF PLAZA DR. AT NORTH END OF PLAZA DR.
ELEV. = 643.87

BM 50 CHISELED "X" ON CONCRETE LIGHT POLE FACING EAST. LOCATED WEST OF PLAZA DRIVE IN FRONT OF HY-VEE NEAR TESLA CHARGING STATIONS
ELEV.= 640.94

BM 52 CHISELED "X" ON CONCRETE BASE OF BARD OPTICAL SIGN FACING NORTH
ELEV.= 644.79

BM 53 CHISELED "X" ON CONCRETE BASE OF LIGHT POLE FACING NORTH. LOCATED IN NORTH EAST END OF LIBERTY VILLAGE PARKING LOT JUST SOUTH OF CROP LINE
ELEV.= 642.93

BM1 RAILROAD SPIKE IN POWER POLE NORTH SIDE OF WENZEL ROAD AT SOUTHEAST CORNER OF O'REILLY'S
ELEV.= 641.95

BM FH "X" ON SOUTHWEST BOLT ON FIRE HYDRANT ON THE SOUTH SIDE OF WENZEL ROAD, WEST OF BROOKSIDE DR.
ELEV.= 640.57

"CONTRACT NO. 87876"

DRAWN BY: DS	REVISIONS			
CHECKED BY: JKC	LEVEL	BY	DATE	DESCRIPTION
DATE: 06/2023				

Chamlin & Associates

PERU MORRIS
OTTAWA MENDOTA
ILLINOIS

PERU ITEP SHARED USE PATH PROJECT
SECTION 23-00073-00-BT
LASALLE COUNTY

BRIDGE PATH AND BECKER DR.
HORIZONTAL AND VERTICAL CONTROL

CONSTRUCTION PLANS

CURRENT AS OF: 12/20/2024			
SCALE: AS NOTED	SHEET	19	
FILE NO.: 66437.00 Y-	OF	183	

FUTURE BECKER DRIVE			
STATION	NORTHING	EASTING	REMARKS
195+00.00	1707309.241	767913.3938	
195+50.00	1707359.239	767913.8406	
196+00.00	1707409.237	767914.2874	
196+50.00	1707459.235	767914.7343	
197+00.00	1707509.233	767915.1811	
197+50.00	1707559.231	767915.6279	
198+00.00	1707609.229	767916.0747	
198+50.00	1707659.227	767916.5215	
199+00.00	1707709.225	767916.9684	
199+50.00	1707759.223	767917.4152	
199+81.40	1707790.6242	767917.6958	INTERSECTION
200+00.00	1707809.221	767917.862	
200+07.41	1707816.626	767917.9282	

WENZEL ROAD			
STATION	NORTHING	EASTING	REMARKS
64+00.00	1707789.935	767825.4536	
64+50.00	1707790.308	767875.4522	
65+00.00	1707790.682	767925.4508	
65+50.00	1707791.056	767975.4494	
66+00.00	1707791.43	768025.448	
66+50.00	1707791.8033	768075.4466	
67+00.00	1707792.1770	768125.4452	
67+50.00	1707792.5507	768175.4438	
68+00.00	1707792.9245	768225.4424	
68+50.00	1707793.2982	768275.4411	
69+00.00	1707793.6719	768325.4397	
69+50.00	1707794.0456	768375.4383	
70+00.00	1707794.4193	768425.4369	
70+50.00	1707794.7930	768475.4355	
71+00.00	1707795.1668	768525.4341	
71+50.00	1707795.5405	768575.4327	
72+00.00	1707795.9142	768625.4313	
72+50.00	1707796.2879	768675.4299	
73+00.00	1707796.6616	768725.4285	
73+50.00	1707797.0354	768775.4271	
74+00.00	1707797.4091	768825.4257	
74+50.00	1707797.7828	768875.4243	
75+00.00	1707798.1565	768925.4229	
75+50.00	1707798.5302	768975.4215	
76+00.00	1707798.9039	769025.4201	
76+50.00	1707799.2777	769075.4187	
77+00.00	1707799.6514	769125.4173	
77+50.00	1707800.0251	769175.4159	
78+00.00	1707800.3988	769225.4145	
78+50.00	1707800.7725	769275.4039	
78+90.06	1707801.0720	769315.4759	PI
79+00.00	1707801.6247	769325.3966	
79+42.93	1707804.0128	769368.2640	PI
79+50.00	1707804.0657	769375.3370	
80+00.00	1707804.4393	769425.3279	

GRAPHIC SCALE
0 30 60
(IN FEET)
N

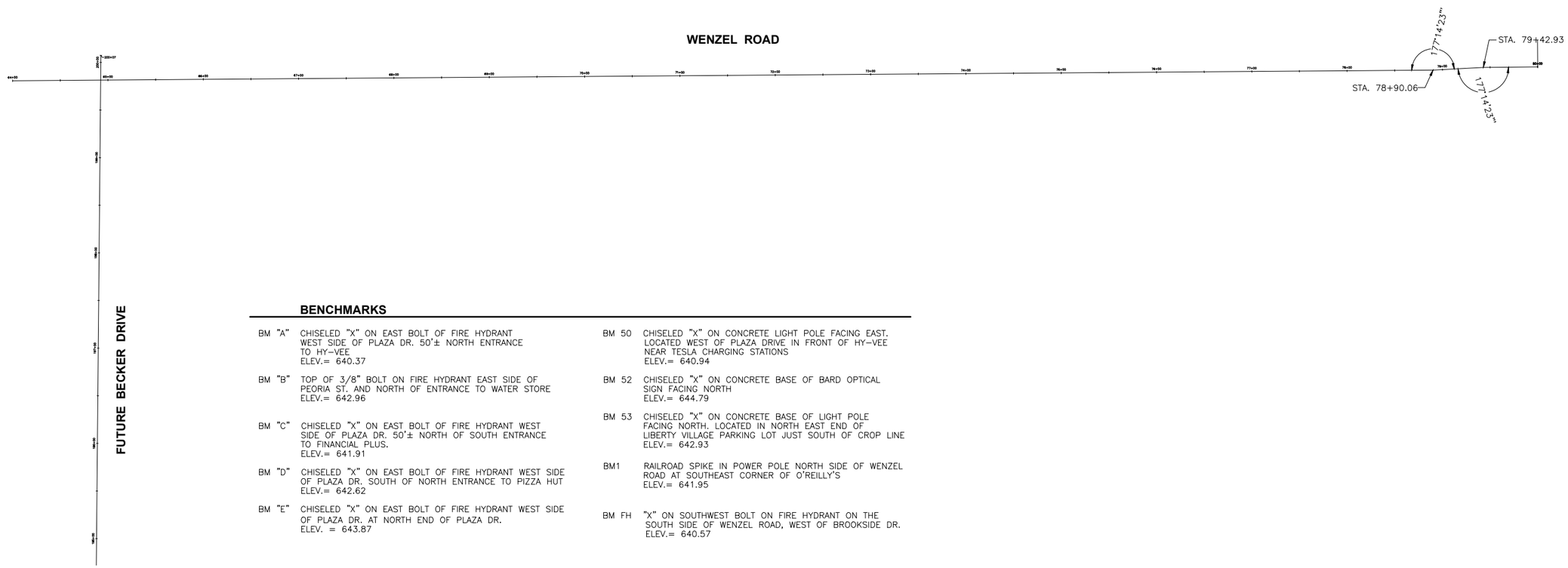

BENCHMARKS

BM "A" CHISELED "X" ON EAST BOLT OF FIRE HYDRANT WEST SIDE OF PLAZA DR. 50'± NORTH ENTRANCE TO HY-VEE
ELEV.= 640.37

BM "B" TOP OF 3/8" BOLT ON FIRE HYDRANT EAST SIDE OF PEORIA ST. AND NORTH OF ENTRANCE TO WATER STORE
ELEV.= 642.96

BM "C" CHISELED "X" ON EAST BOLT OF FIRE HYDRANT WEST SIDE OF PLAZA DR. 50'± NORTH OF SOUTH ENTRANCE TO FINANCIAL PLUS.
ELEV.= 641.91

BM "D" CHISELED "X" ON EAST BOLT OF FIRE HYDRANT WEST SIDE OF PLAZA DR. SOUTH OF NORTH ENTRANCE TO PIZZA HUT
ELEV.= 642.62

BM "E" CHISELED "X" ON EAST BOLT OF FIRE HYDRANT WEST SIDE OF PLAZA DR. AT NORTH END OF PLAZA DR.
ELEV. = 643.87

BM 50 CHISELED "X" ON CONCRETE LIGHT POLE FACING EAST. LOCATED WEST OF PLAZA DRIVE IN FRONT OF HY-VEE NEAR TESLA CHARGING STATIONS
ELEV.= 640.94

BM 52 CHISELED "X" ON CONCRETE BASE OF BARD OPTICAL SIGN FACING NORTH
ELEV.= 644.79

BM 53 CHISELED "X" ON CONCRETE BASE OF LIGHT POLE FACING NORTH. LOCATED IN NORTH EAST END OF LIBERTY VILLAGE PARKING LOT JUST SOUTH OF CROP LINE
ELEV.= 642.93

BM1 RAILROAD SPIKE IN POWER POLE NORTH SIDE OF WENZEL ROAD AT SOUTHEAST CORNER OF O'REILLY'S
ELEV.= 641.95

BM FH "X" ON SOUTHWEST BOLT ON FIRE HYDRANT ON THE SOUTH SIDE OF WENZEL ROAD, WEST OF BROOKSIDE DR.
ELEV.= 640.57

"CONTRACT NO. 87876"

DRAWN BY: DS	REVISIONS			
CHECKED BY: JKC	LEVEL	BY	DATE	DESCRIPTION
DATE: 06/2023				

Chamlin & Associates

PERU MORRIS
OTTAWA MENDOTA
ILLINOIS

PERU ITEP SHARED USE PATH PROJECT
SECTION 23-00073-00-BT
LASALLE COUNTY

FUTURE BECKER DR. AND WENZEL ROAD
HORIZONTAL AND VERTICAL CONTROL

CONSTRUCTION PLANS

CURRENT AS OF: 12/20/2024			
SCALE: AS NOTED	SHEET	20	
FILE NO.: 66437.00 Y-	OF	183	

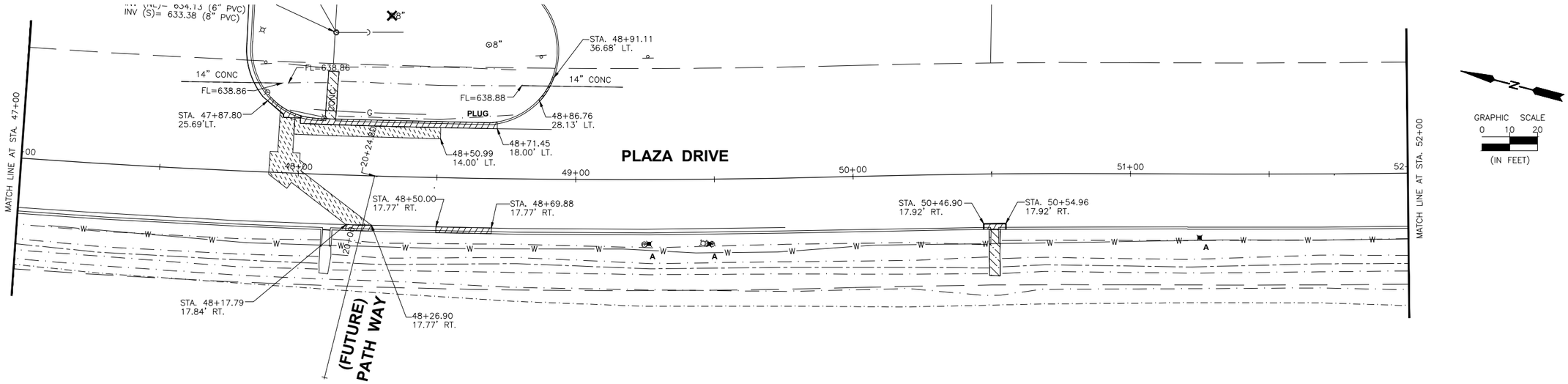

PAVEMENT REMOVAL AND PAVEMENT PATCHING

SIDEWALK REMOVAL

DRIVEWAY PAVEMENT REMOVAL

COMBINATION CONCRETE CURB & GUTTER REMOVAL

PAVED DITCH REMOVAL

RLU – REMOVAL OF LIGHTING UNITS SALVAGE
E – FIRE HYDRANT EXTENSION
A – MANHOLE, INLET OR VALVE BOX TO BE ADJUSTED
R – MANHOLE, INLET, SIGN, OR PIPE CULVERT TO BE REMOVED
– STORM SEWER TO BE REMOVED
– TREE REMOVAL
RC – RECONSTRUCT MANHOLE

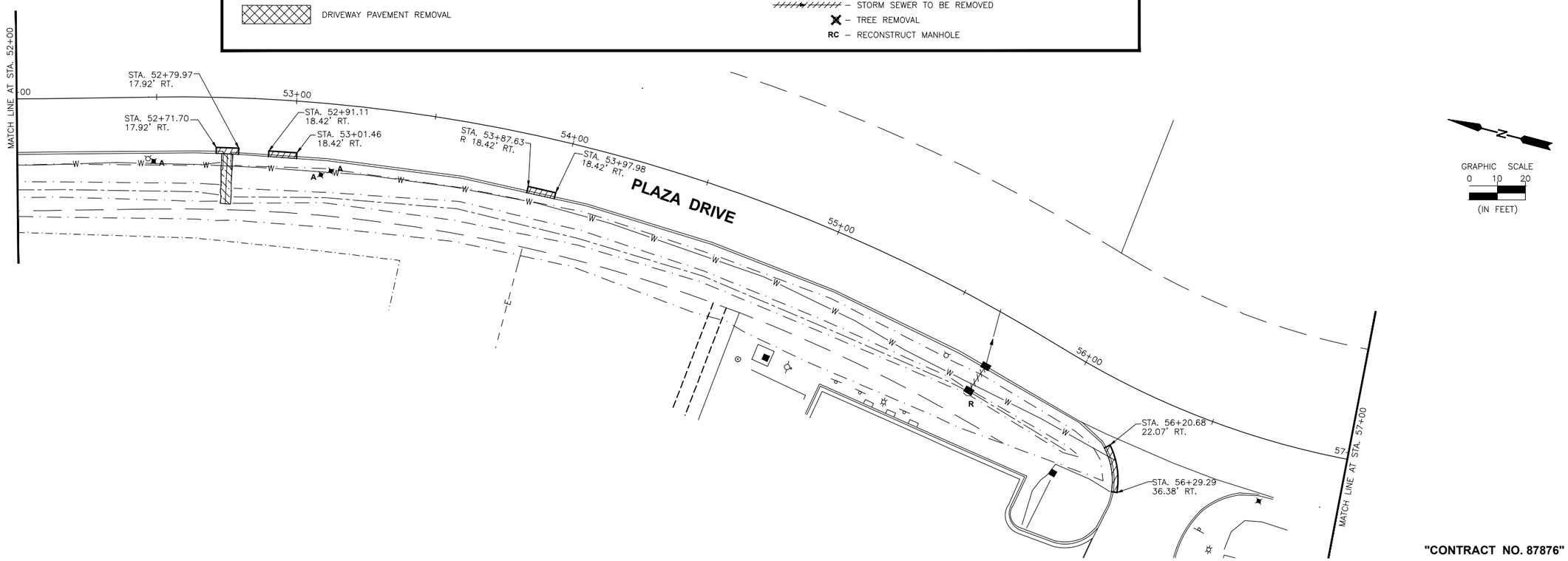

"CONTRACT NO. 87876"

DRAWN BY: FDAP	REVISIONS			
CHECKED BY: JKC	LEVEL	BY	DATE	DESCRIPTION
DATE: 08/2023				

Chamlin & Associates

PERU MORRIS
OTTAWA MORTON
ILLINOIS

PERU ITEP SHARED USE PATH PROJECT
SECTION 23-00073-00-BT
LASALLE COUNTY

REMOVAL PLANS

CONSTRUCTION PLANS

CURRENT AS OF: 12/20/2024		
SCALE: AS NOTED	SHEET 21	
FILE NO.: 66437.00 Y–	OF 183	

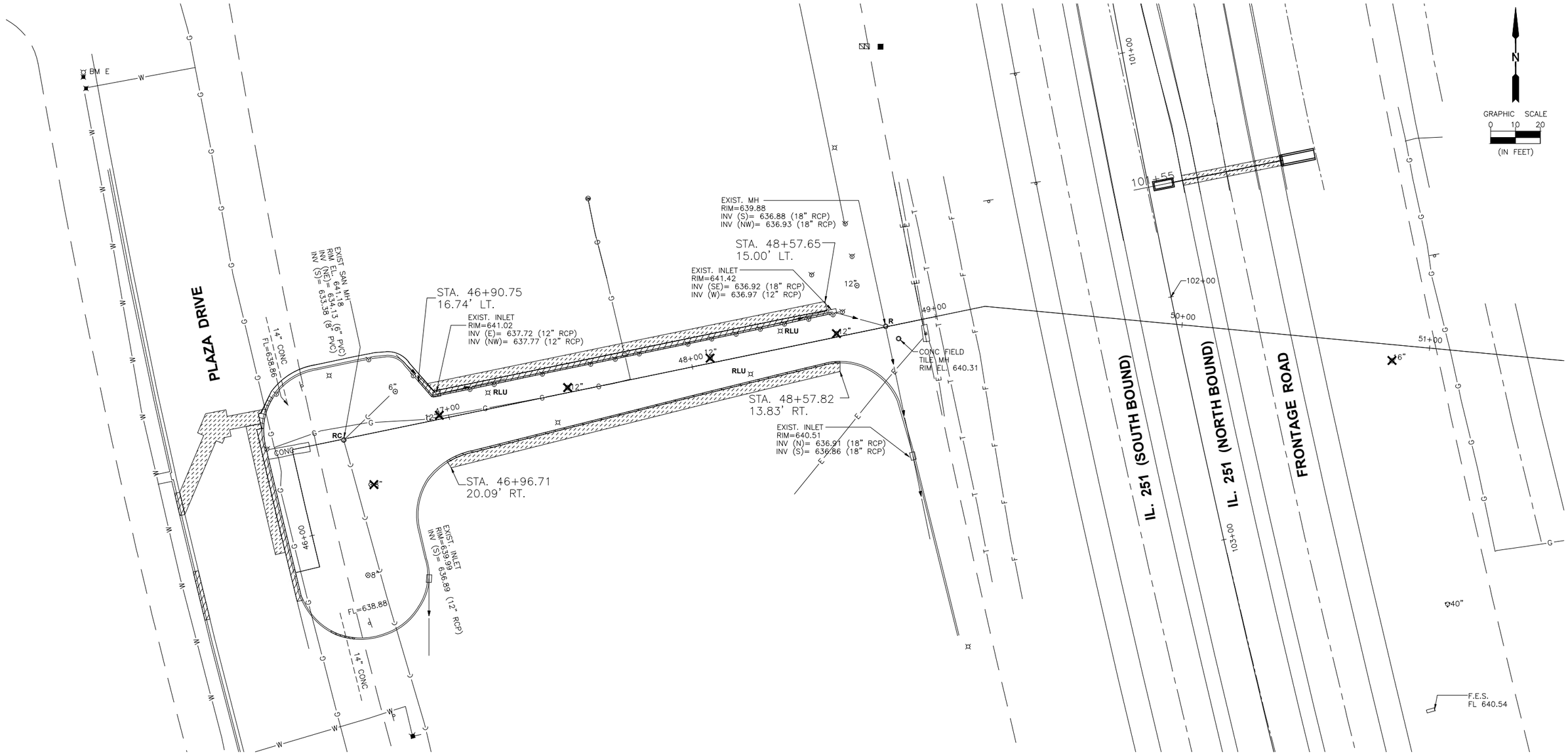

PAVEMENT REMOVAL AND PAVEMENT PATCHING

SIDEWALK REMOVAL

DRIVEWAY PAVEMENT REMOVAL

COMBINATION CONCRETE CURB & GUTTER REMOVAL

PAVED DITCH REMOVAL

RLU – REMOVAL OF LIGHTING UNITS SALVAGE
E – FIRE HYDRANT EXTENSION
A – MANHOLE, INLET OR VALVE BOX TO BE ADJUSTED
R – MANHOLE, INLET, SIGN, OR PIPE CULVERT TO BE REMOVED
– STORM SEWER TO BE REMOVED
– TREE REMOVAL
RC – RECONSTRUCT MANHOLE

"CONTRACT NO. 87876"

DRAWN BY: FDAP	REVISIONS			PERU MORRIS OTTAWA MORTON ILLINOIS	**PERU ITEP SHARED USE PATH PROJECT SECTION 23-00073-00-BT LASALLE COUNTY**
CHECKED BY: JKC	LEVEL / BY / DATE / DESCRIPTION				
DATE: 08/2023					

Chamlin & Associates

REMOVAL PLANS

CONSTRUCTION PLANS

CURRENT AS OF: 12/20/2024	
SCALE: AS NOTED	SHEET 22
FILE NO.: 66437.00 Y–	OF 183

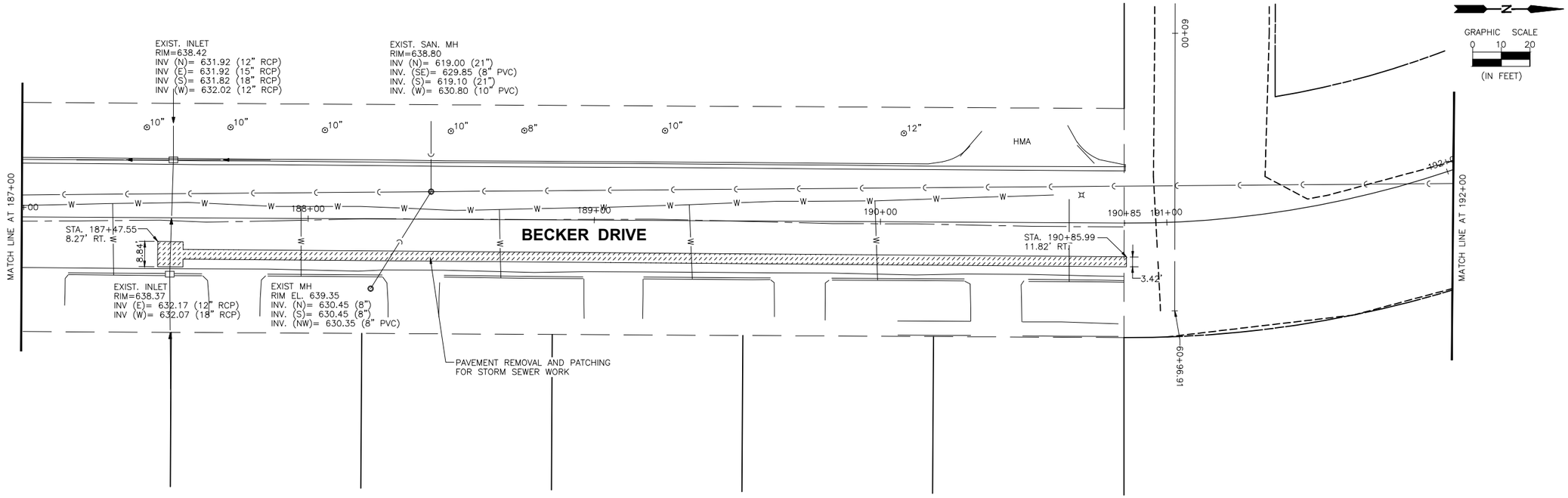

PAVEMENT REMOVAL AND PAVEMENT PATCHING

SIDEWALK REMOVAL

DRIVEWAY PAVEMENT REMOVAL

COMBINATION CONCRETE CURB & GUTTER REMOVAL

PAVED DITCH REMOVAL

RLU – REMOVAL OF LIGHTING UNITS SALVAGE
E – FIRE HYDRANT EXTENSION
A – MANHOLE, INLET OR VALVE BOX TO BE ADJUSTED
R – MANHOLE, INLET, SIGN, OR PIPE CULVERT TO BE REMOVED
– STORM SEWER TO BE REMOVED
– TREE REMOVAL
RC – RECONSTRUCT MANHOLE

"CONTRACT NO. 87876"

DRAWN BY: FDAP	REVISIONS			
CHECKED BY: JKC	LEVEL	BY	DATE	DESCRIPTION
DATE: 08/2023				

Chamlin & Associates

PERU MORRIS
OTTAWA MORTON
ILLINOIS

PERU ITEP SHARED USE PATH PROJECT
SECTION 23-00073-00-BT
LASALLE COUNTY

REMOVAL PLANS

CONSTRUCTION PLANS

CURRENT AS OF: 12/20/2024
SCALE: AS NOTED
SHEET 23
FILE NO.: 66437.00 Y–
OF 183

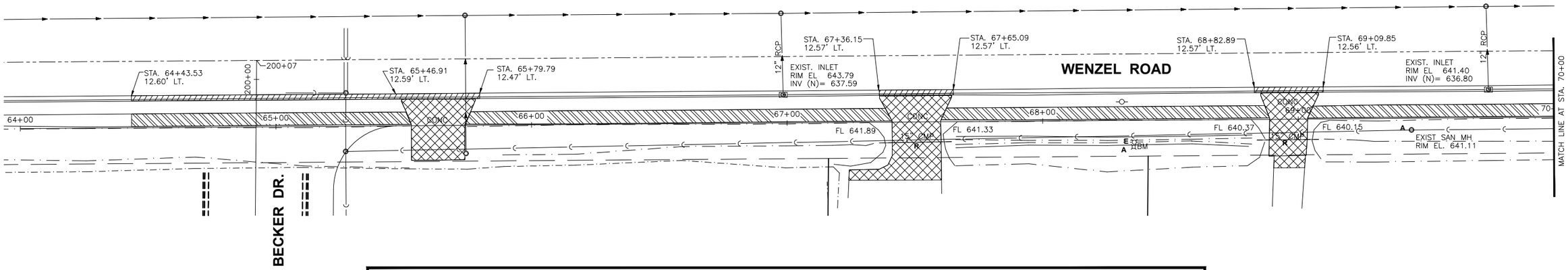

- PAVEMENT REMOVAL AND PAVEMENT PATCHING
- SIDEWALK REMOVAL
- DRIVEWAY PAVEMENT REMOVAL
- COMBINATION CONCRETE CURB & GUTTER REMOVAL
- PAVED DITCH REMOVAL

RLU – REMOVAL OF LIGHTING UNITS SALVAGE
E – FIRE HYDRANT EXTENSION
A – MANHOLE, INLET OR VALVE BOX TO BE ADJUSTED
R – MANHOLE, INLET, SIGN, OR PIPE CULVERT TO BE REMOVED
– STORM SEWER TO BE REMOVED
– TREE REMOVAL
RC – RECONSTRUCT MANHOLE

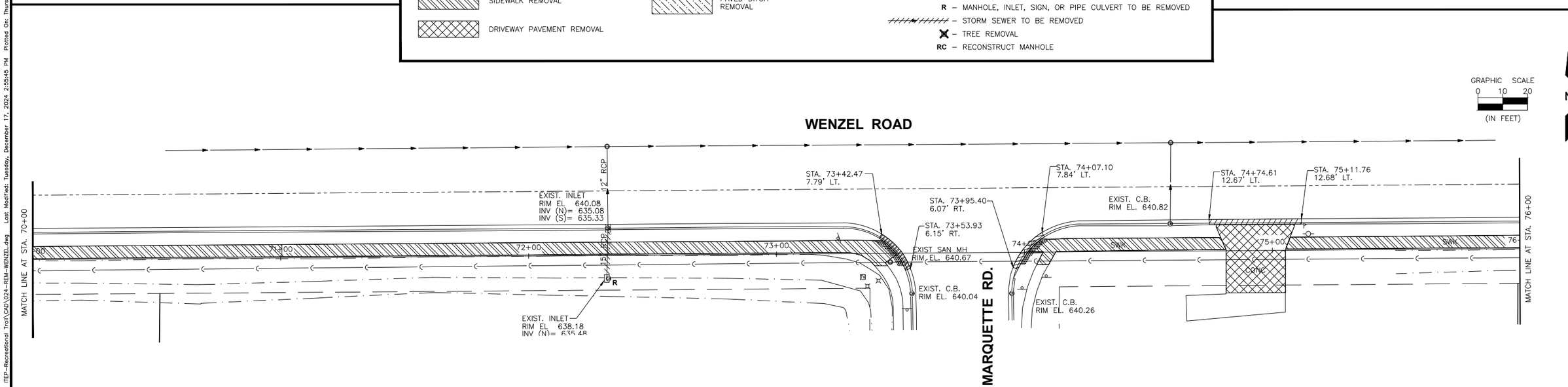

"CONTRACT NO. 87876"

DRAWN BY: FDAP	REVISIONS			PERU MORRIS	**PERU ITEP SHARED USE PATH PROJECT**	**REMOVAL PLANS**	CONSTRUCTION PLANS	CURRENT AS OF: 12/20/2024
CHECKED BY: JKC	LEVEL / BY / DATE / DESCRIPTION			OTTAWA MORTON	**SECTION 23-00073-00-BT**			SCALE: AS NOTED / SHEET 24
DATE: 08/2023				ILLINOIS	**LASALLE COUNTY**			FILE NO.: 66437.00 Y– / OF 183

Chamlin & Associates

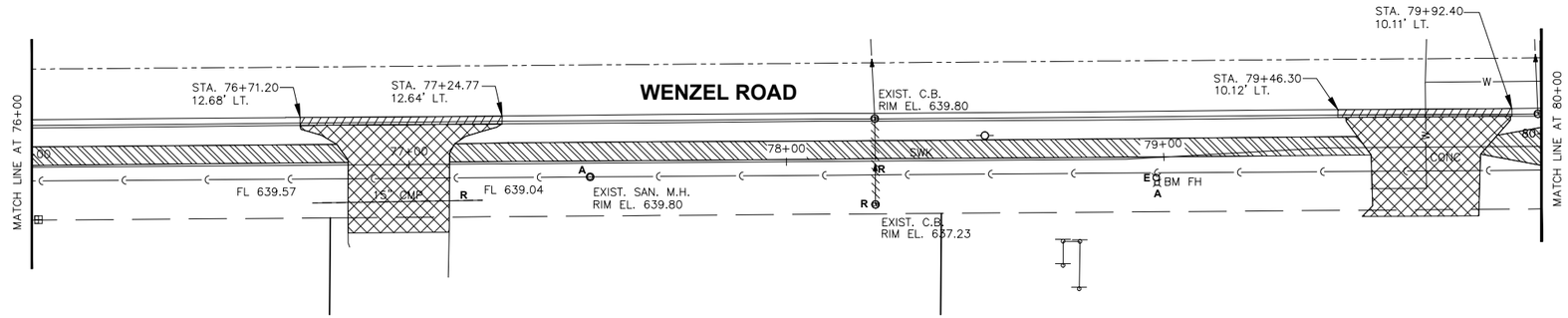

GRAPHIC SCALE
0 10 20
(IN FEET)

N

PAVEMENT REMOVAL AND PAVEMENT PATCHING

SIDEWALK REMOVAL

DRIVEWAY PAVEMENT REMOVAL

COMBINATION CONCRETE CURB & GUTTER REMOVAL

PAVED DITCH REMOVAL

RLU – REMOVAL OF LIGHTING UNITS SALVAGE
E – FIRE HYDRANT EXTENSION
A – MANHOLE, INLET OR VALVE BOX TO BE ADJUSTED
R – MANHOLE, INLET, SIGN, OR PIPE CULVERT TO BE REMOVED
– STORM SEWER TO BE REMOVED
– TREE REMOVAL
RC – RECONSTRUCT MANHOLE

N

GRAPHIC SCALE
0 10 20
(IN FEET)

"CONTRACT NO. 87876"

DRAWN BY: FDAP	REVISIONS			
CHECKED BY: JKC	LEVEL	BY	DATE	DESCRIPTION
DATE: 08/2023				

Chamlin & Associates

PERU MORRIS
OTTAWA MORTON
ILLINOIS

PERU ITEP SHARED USE PATH PROJECT
SECTION 23-00073-00-BT
LASALLE COUNTY

REMOVAL PLANS

CONSTRUCTION PLANS

CURRENT AS OF: 12/20/2024		
SCALE: AS NOTED	SHEET	25
FILE NO.: 66437.00 Y–	OF	183

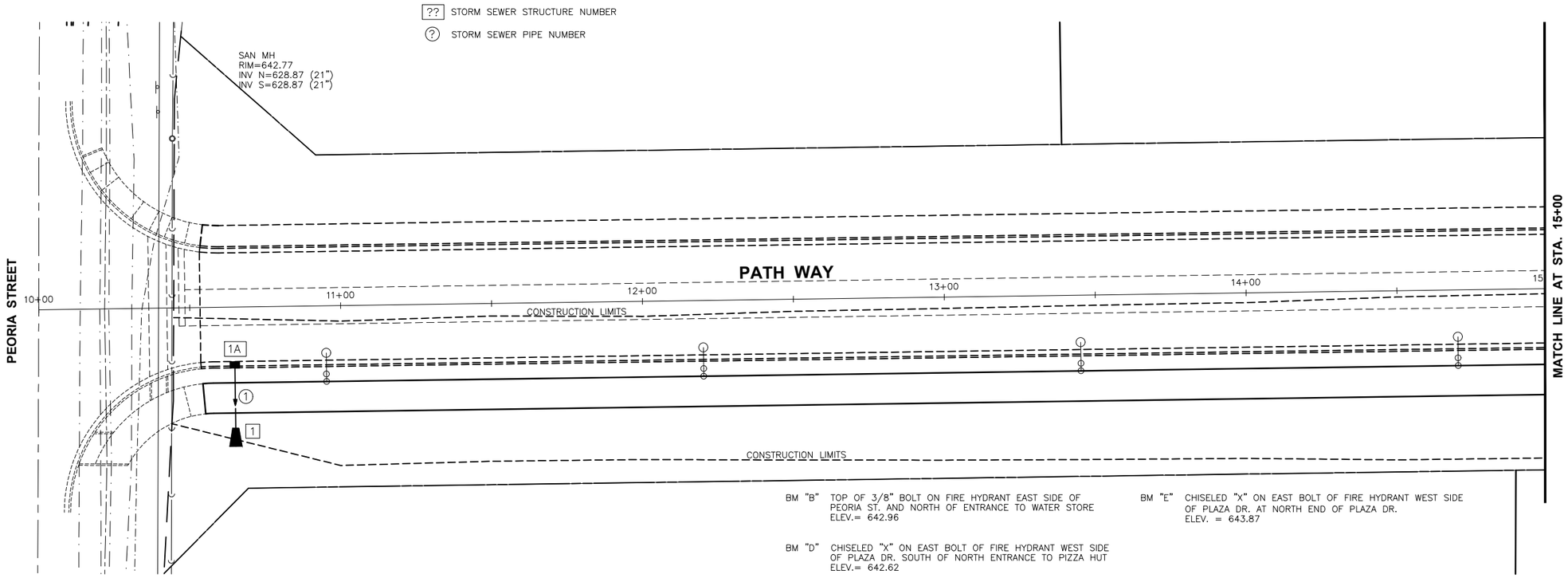

BM "B" TOP OF 3/8" BOLT ON FIRE HYDRANT EAST SIDE OF PEORIA ST. AND NORTH OF ENTRANCE TO WATER STORE ELEV.= 642.96

BM "D" CHISELED "X" ON EAST BOLT OF FIRE HYDRANT WEST SIDE OF PLAZA DR. SOUTH OF NORTH ENTRANCE TO PIZZA HUT ELEV.= 642.62

BM "E" CHISELED "X" ON EAST BOLT OF FIRE HYDRANT WEST SIDE OF PLAZA DR. AT NORTH END OF PLAZA DR. ELEV. = 643.87

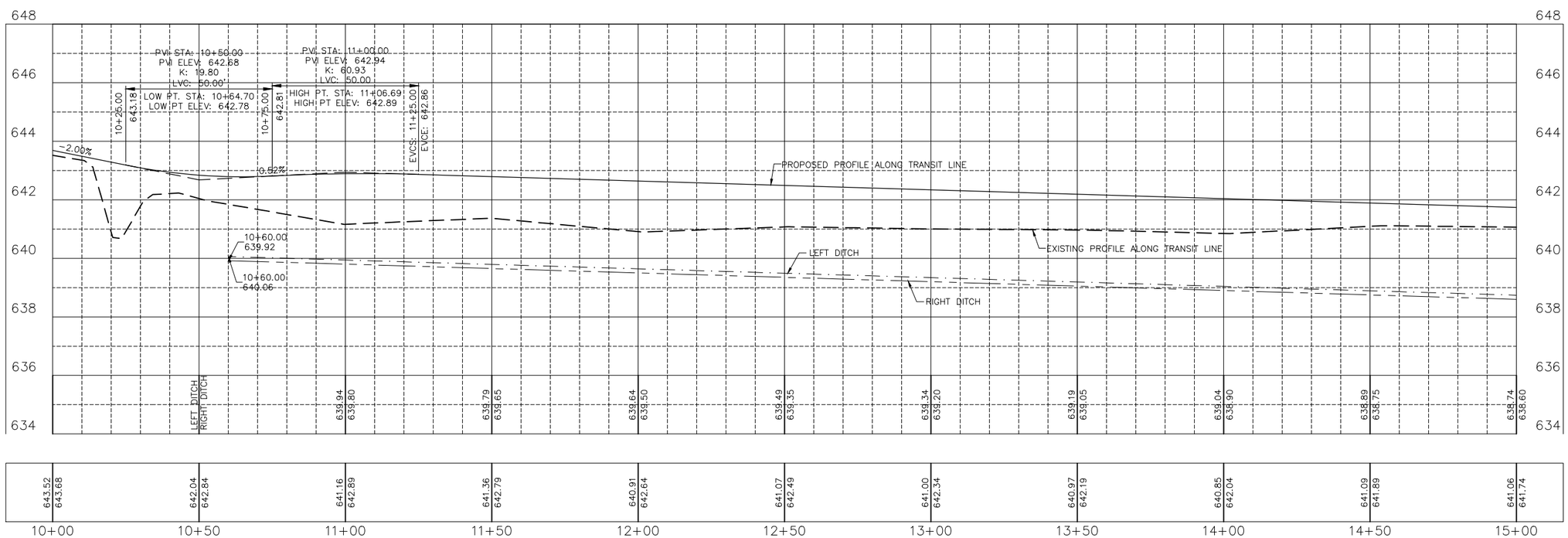

"CONTRACT NO. 87876"

DRAWN BY: LMP	REVISIONS			
CHECKED BY: CHECKED	LEVEL	BY	DATE	DESCRIPTION
DATE: 06/2023				

Chamlin & Associates

PERU MORRIS
OTTAWA MENDOTA
ILLINOIS

PERU ITEP SHARED USE PATH PROJECT
SECTION 23-00073-00-BT
LASALLE COUNTY

PLAN AND PROFILE
PATH WAY STA. 10+00 TO STA. 15+00

CONSTRUCTION PLANS

CURRENT AS OF: 12/20/2024	
SCALE: AS NOTED	SHEET 26
FILE NO.: 66437.00 Y-	OF 183

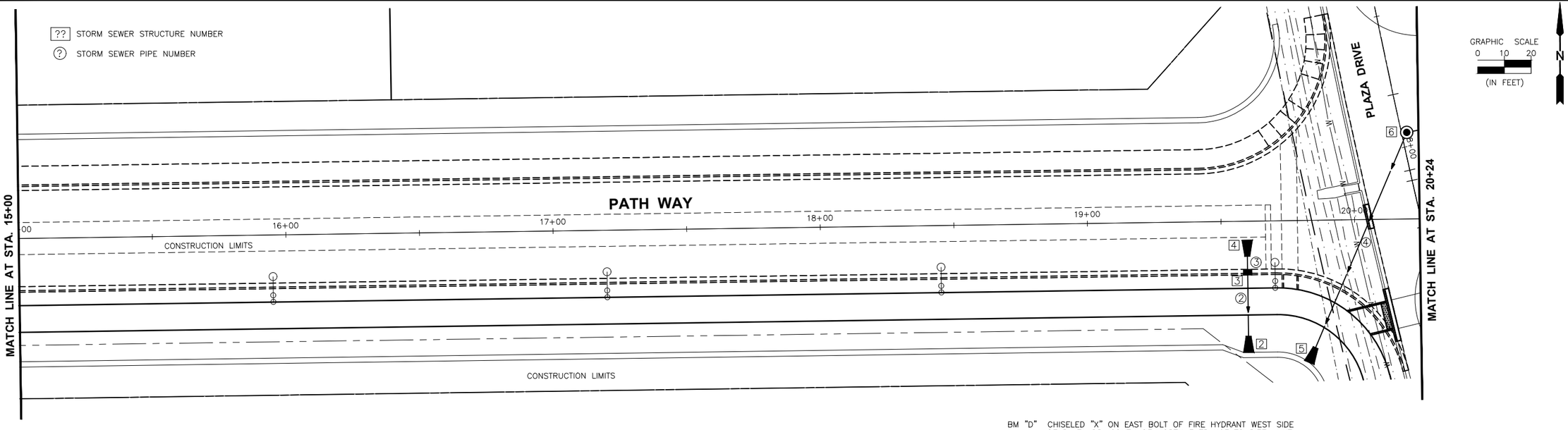

BM "D" CHISELED "X" ON EAST BOLT OF FIRE HYDRANT WEST SIDE OF PLAZA DR. SOUTH OF NORTH ENTRANCE TO PIZZA HUT
ELEV.= 642.62

BM "E" CHISELED "X" ON EAST BOLT OF FIRE HYDRANT WEST SIDE OF PLAZA DR. AT NORTH END OF PLAZA DR.
ELEV. = 643.87

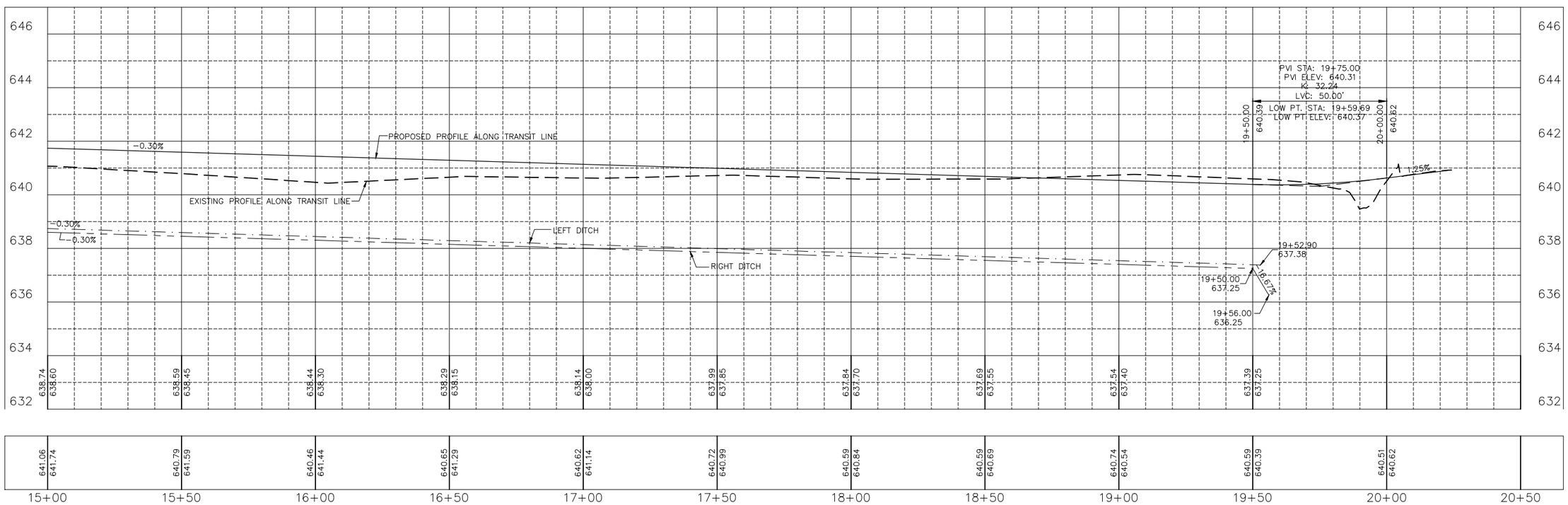

"CONTRACT NO. 87876"

DRAWN BY: LMP	REVISIONS			
CHECKED BY: CHECKED	LEVEL	BY	DATE	DESCRIPTION
DATE: 06/2023				

Chamlin & Associates

PERU MORRIS
OTTAWA MENDOTA
ILLINOIS

PERU ITEP SHARED USE PATH PROJECT
SECTION 23-00073-00-BT
LASALLE COUNTY

PLAN AND PROFILE
PATH WAY STA. 15+00 TO STA. 20+00

CONSTRUCTION PLANS

CURRENT AS OF: 12/20/2024	
SCALE: AS NOTED	SHEET 27
FILE NO.: 66437.00 Y–	OF 183

CURVE 1
DELTA=5°40'51"
R=3040.00'
T=150.83'
L= 301.41'
CHORD
S 13°28'20" E
301.28'
P.C. STA. 46+98.45
P.I. STA. 48+49.28
P.T. STA. 49+99.86

?? STORM SEWER STRUCTURE NUMBER
? STORM SEWER PIPE NUMBER

CURVE 2
DELTA=1°56'17"
R=2960.35'
T=50.07'
L= 100.14'
CHORD
S 15°20'36" E
100.13'
P.C.C. STA. 49+99.86
P.I. STA. 50+49.93
P.T. STA. 51+00.00

CURVE 3
DELTA=1°22'46"
R=6109.65'
T=73.55'
L= 147.08'
CHORD
S 15°04'55" E
147.08'
P.C.C. STA. 51+00.00
P.I. STA. 51+73.55
P.T. STA. 52+47.08

GRAPHIC SCALE
0 10 20
(IN FEET)

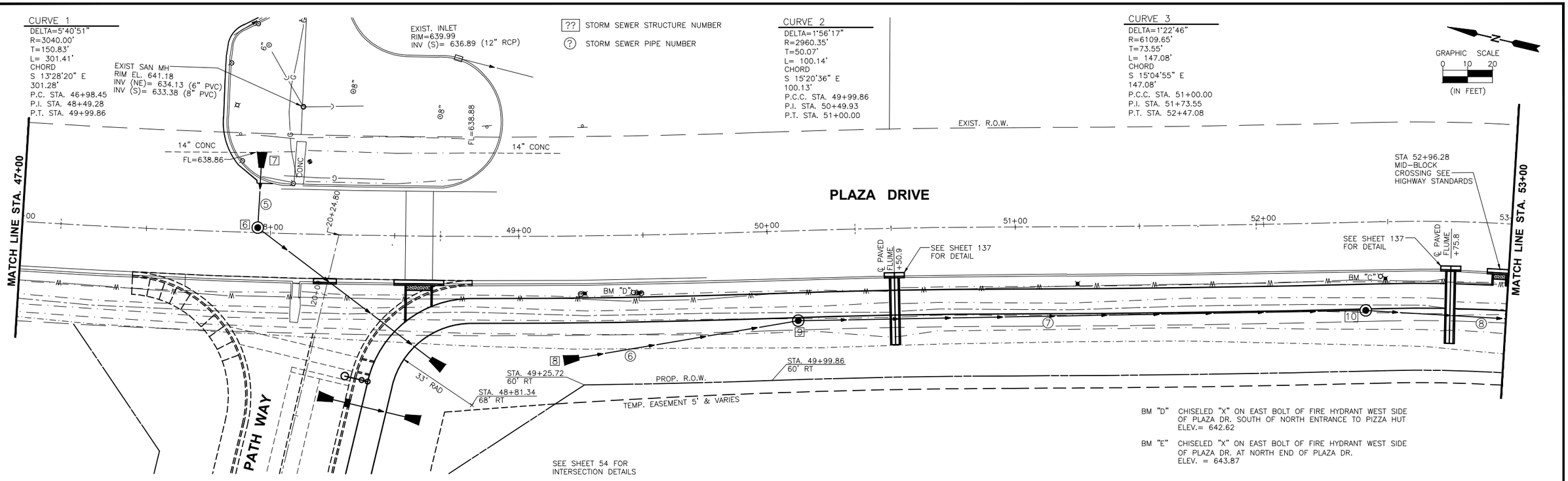

BM "D" CHISELED "X" ON EAST BOLT OF FIRE HYDRANT WEST SIDE OF PLAZA DR. SOUTH OF NORTH ENTRANCE TO PIZZA HUT ELEV.= 642.62

BM "E" CHISELED "X" ON EAST BOLT OF FIRE HYDRANT WEST SIDE OF PLAZA DR. AT NORTH END OF PLAZA DR. ELEV. = 643.87

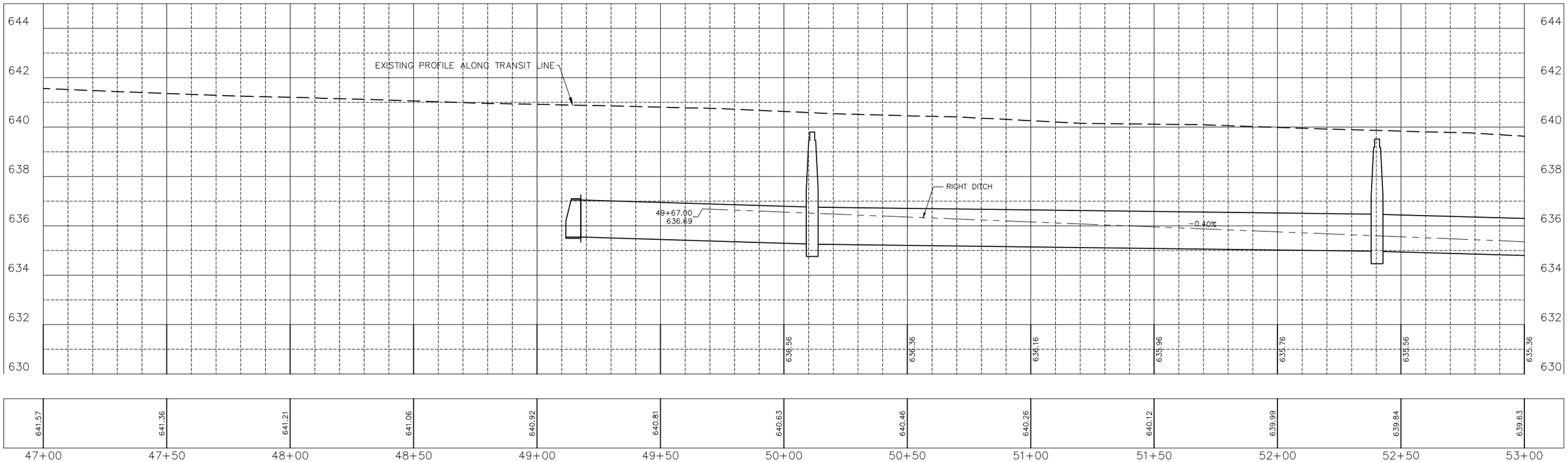

"CONTRACT NO. 87876"

DRAWN BY: LMP	REVISIONS			
CHECKED BY: CHECKED	LEVEL	BY	DATE	DESCRIPTION
DATE: 06/2023				

Chamlin & Associates

PERU MORRIS
OTTAWA MORTON
ILLINOIS

PERU ITEP SHARED USE PATH PROJECT
SECTION 23-00073-00-BT
LASALLE COUNTY

PLAN AND PROFILE
PLAZA DRIVE STA. 47+00 TO STA. 53+00

CONSTRUCTION PLANS

CURRENT AS OF: 12/20/2024
SCALE: AS NOTED
SHEET 28
FILE NO.: 66437.00 Y-
OF 183

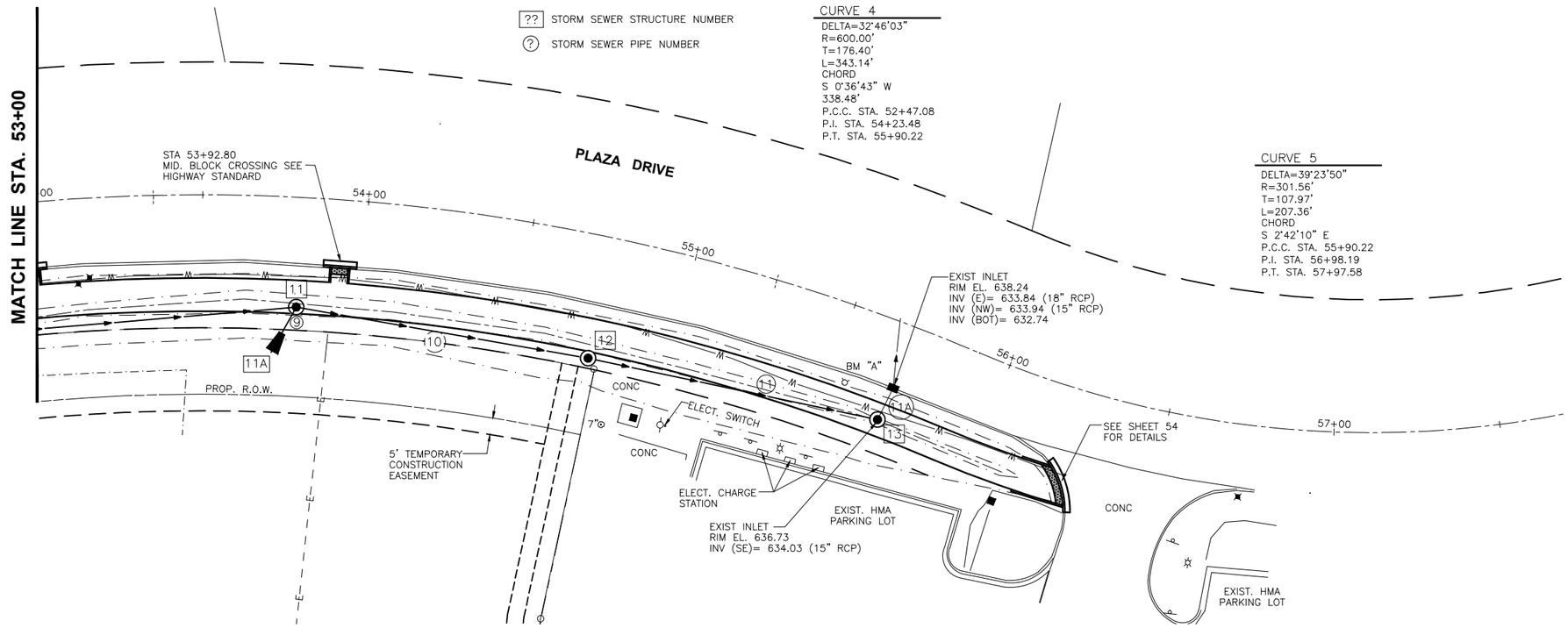

BM "A" CHISELED "X" ON EAST BOLT OF FIRE HYDRANT WEST SIDE OF PLAZA DR. 50'± NORTH ENTRANCE TO HY-VEE
ELEV.= 640.37

BM "C" CHISELED "X" ON EAST BOLT OF FIRE HYDRANT WEST SIDE OF PLAZA DR. 50'± NORTH OF SOUTH ENTRANCE TO FINANCIAL PLUS.
ELEV.= 641.91

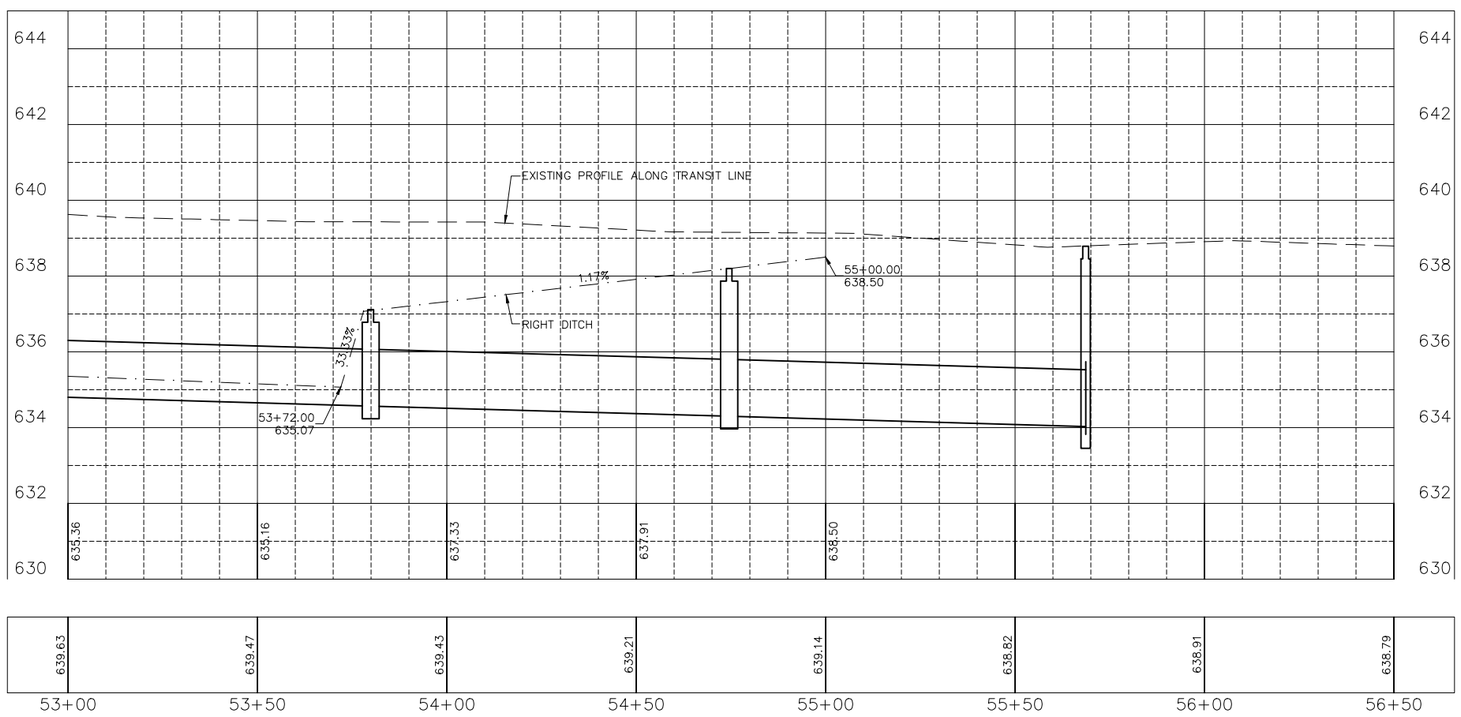

"CONTRACT NO. 87876"

DRAWN BY: LMP	REVISIONS				
CHECKED BY: CHECKED	LEVEL	BY	DATE	DESCRIPTION	
DATE: 06/2023					

Chamlin & Associates

PERU MORRIS
OTTAWA MENDOTA
ILLINOIS

PERU ITEP SHARED USE PATH PROJECT
SECTION 23-00073-00-BT
LASALLE COUNTY

PLAN AND PROFILE
PLAZA DRIVE STA. 53+00 TO STA. 60+00

CONSTRUCTION PLANS

CURRENT AS OF: 12/20/2024		
SCALE: AS NOTED	SHEET 29	
FILE NO.: 66437.00 Y-	OF 183	

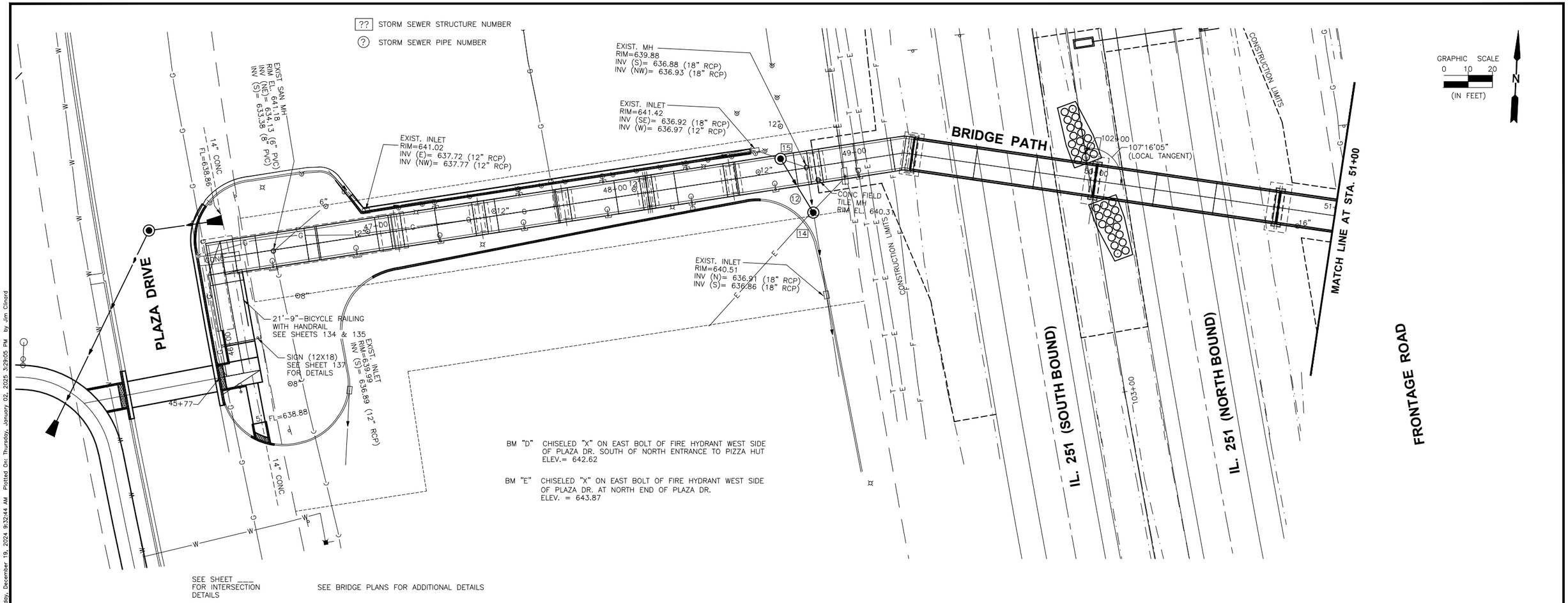

CURVE 7 (BRIDGE PATH)

DELTA=0°55'19"
R=3009.92'
T=24.21'
L=48.43'
CHORD
N 13°12'57" W
48.43'
P.C. STA. 45+87.04
P.I. STA. 46+11.25
P.T. STA. 46+35.47

CURVE 6 (IL 251)

DELTA=26°59'59"
R=5729.65'
T=1375.55'
L=2700.00'
CHORD
S 13°42'33" E
2675.09'
P.C. STA. 90+41.40
P.I. STA. 104+16.95
P.T. STA. 117+41.4

"CONTRACT NO. 87876"

DRAWN BY: LMP	REVISIONS				
CHECKED BY: CHECKED	LEVEL	BY	DATE	DESCRIPTION	
DATE: 06/2023					

Chamlin & Associates

PERU MORRIS
OTTAWA MENDOTA
ILLINOIS

PERU ITEP SHARED USE PATH PROJECT
SECTION 23-00073-00-BT
LASALLE COUNTY

PLAN VIEW
BRIDGE PATH STA. 45+00 TO STA. 51+00

CONSTRUCTION PLANS

CURRENT AS OF: 12/20/2024			
SCALE: AS NOTED	SHEET	30	
FILE NO.: 66437.00 Y-	OF	183	

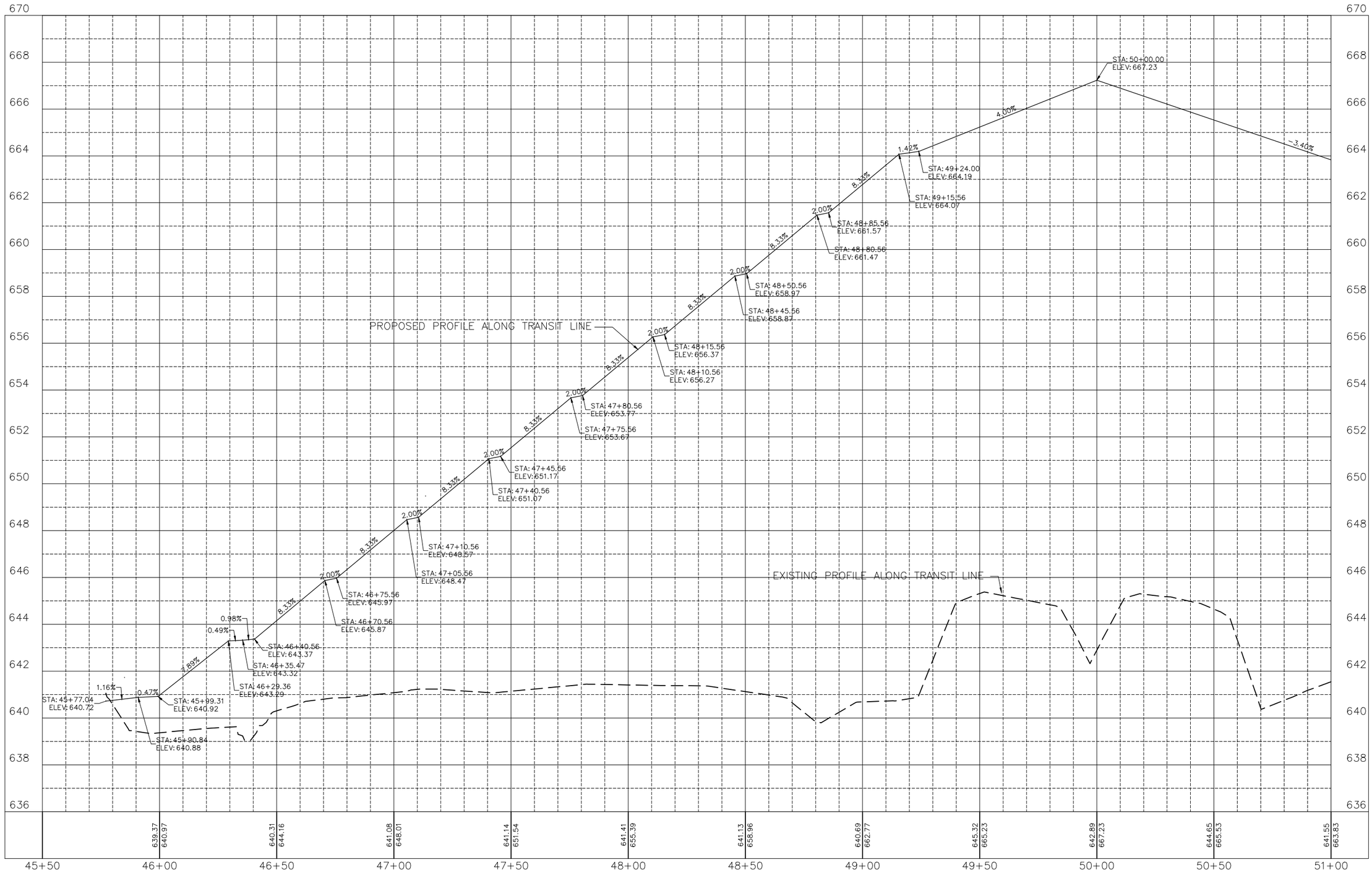

"CONTRACT NO. 87876"

DRAWN BY: LMP	REVISIONS				PERU MORRIS OTTAWA MENDOTA ILLINOIS	PERU ITEP SHARED USE PATH PROJECT SECTION 23-00073-00-BT LASALLE COUNTY	PROFILE VIEW BRIDGE PATH STA. 45+00 TO STA. 51+00	CONSTRUCTION PLANS	CURRENT AS OF: 12/20/2024	
CHECKED BY: JKC	LEVEL	BY	DATE	DESCRIPTION					SCALE: AS NOTED	SHEET 31
DATE: 06/2023									FILE NO.: 66437.00 Y-	OF 183

Chamlin & Associates

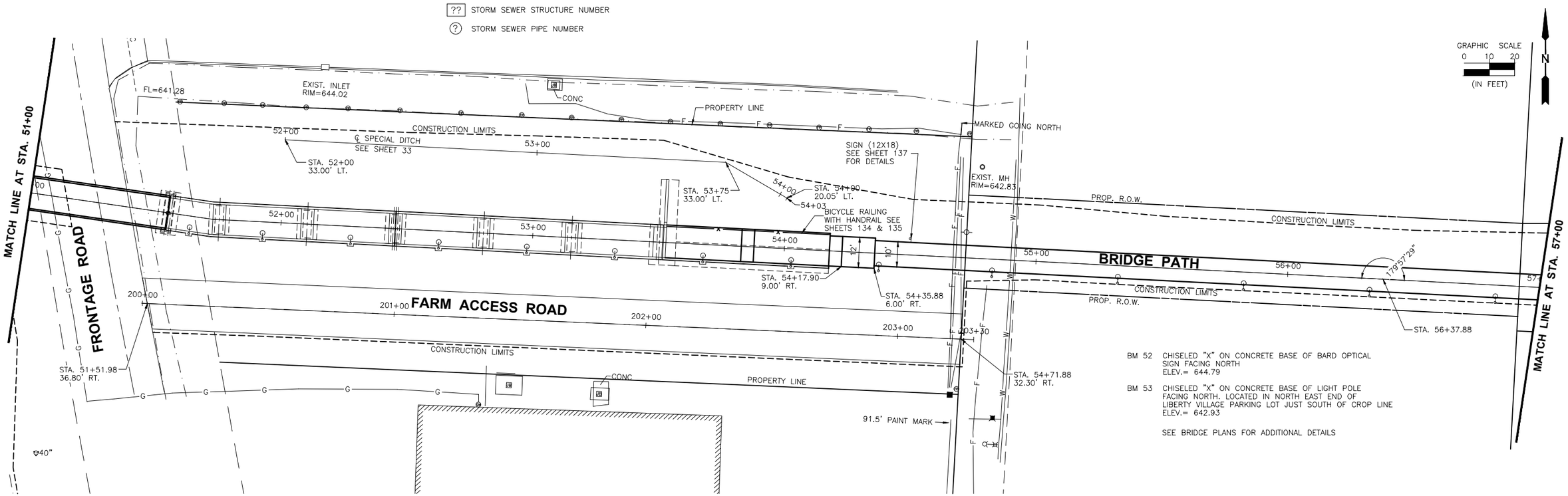

BM 52 CHISELED "X" ON CONCRETE BASE OF BARD OPTICAL SIGN FACING NORTH
ELEV.= 644.79

BM 53 CHISELED "X" ON CONCRETE BASE OF LIGHT POLE FACING NORTH. LOCATED IN NORTH EAST END OF LIBERTY VILLAGE PARKING LOT JUST SOUTH OF CROP LINE
ELEV.= 642.93

SEE BRIDGE PLANS FOR ADDITIONAL DETAILS

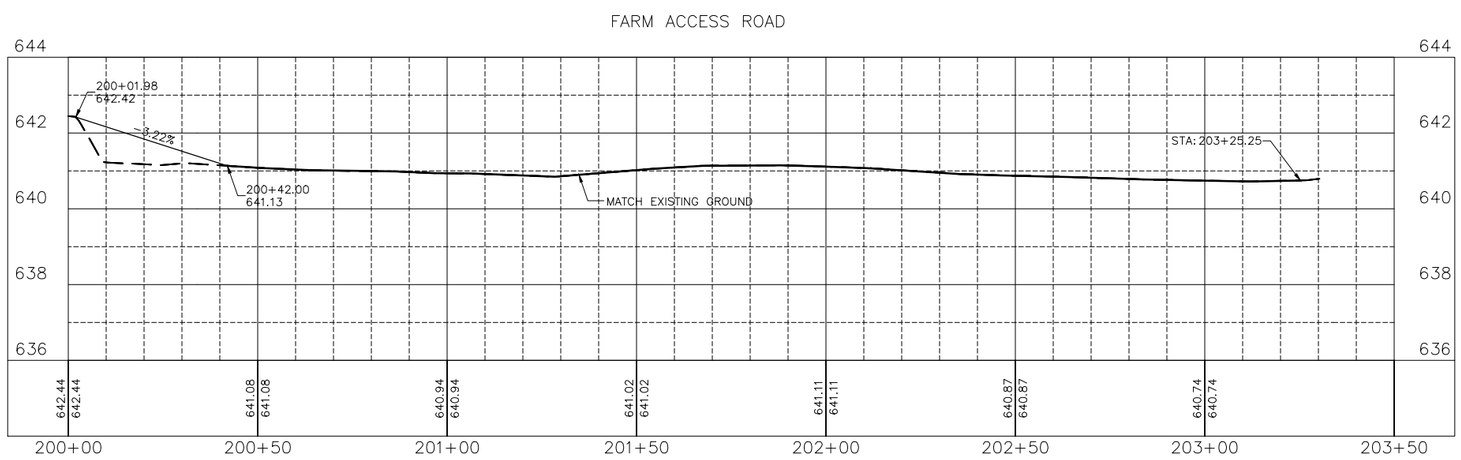

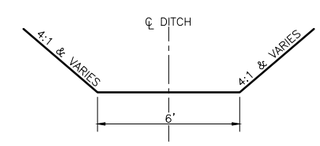

SPECIAL DITCH TYPICAL SECTION

"CONTRACT NO. 87876"

DRAWN BY: LMP	REVISIONS			
CHECKED BY: JKC	LEVEL	BY	DATE	DESCRIPTION
DATE: 06/2023				

Chamlin & Associates

PERU MORRIS
OTTAWA MENDOTA
ILLINOIS

PERU ITEP SHARED USE PATH PROJECT
SECTION 23-00073-00-BT
LASALLE COUNTY

PLAN VIEW
BRIDGE PATH STA. 51+00 TO STA. 57+00

CONSTRUCTION PLANS

CURRENT AS OF: 12/20/2024	
SCALE: AS NOTED	SHEET 32
FILE NO.: 66437.00 Y-	OF 183

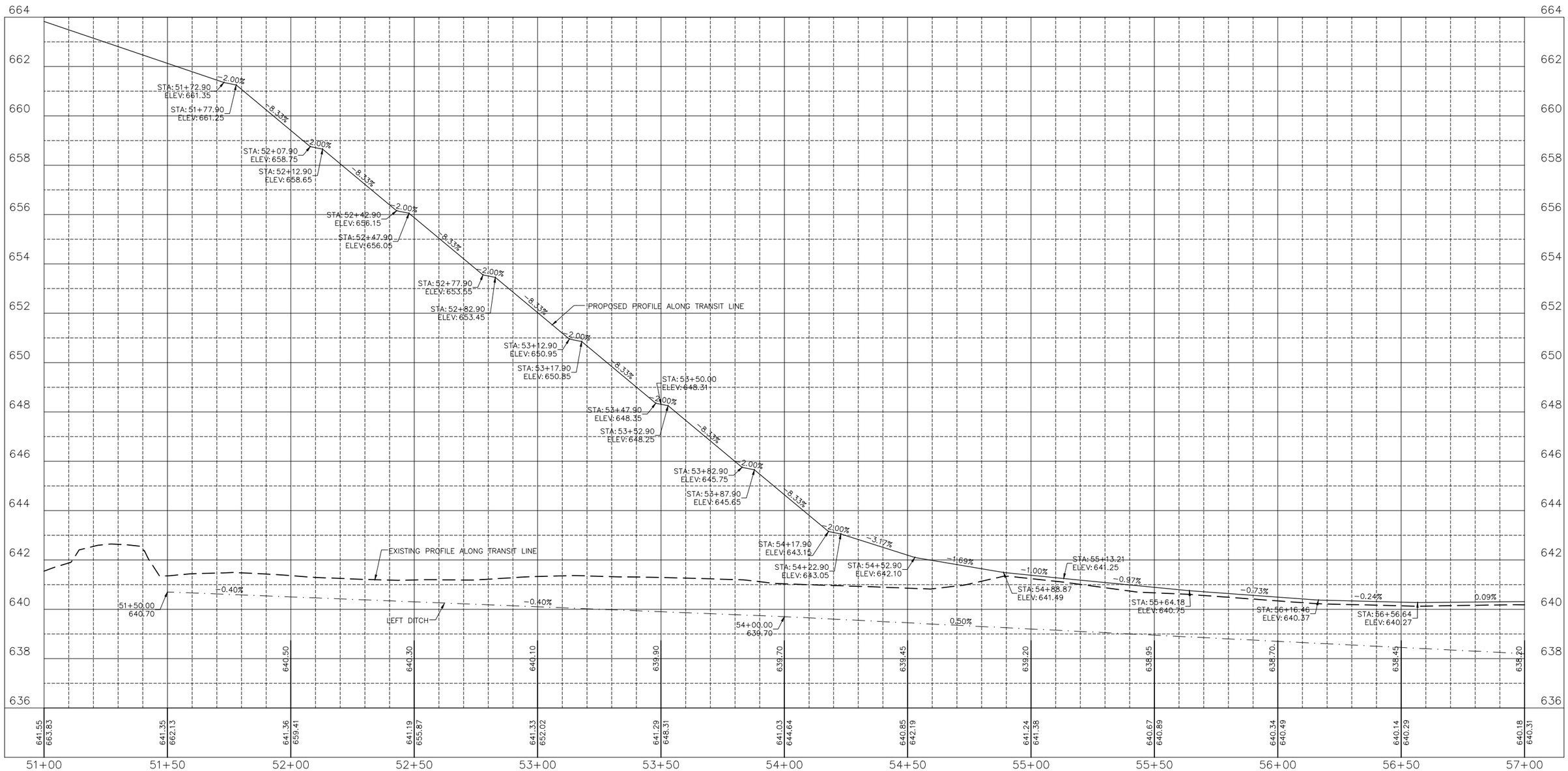

"CONTRACT NO. 87876"

DRAWN BY: LMP	REVISIONS				
CHECKED BY: JKC	LEVEL	BY	DATE	DESCRIPTION	
DATE: 06/2023					

Chamlin & Associates

PERU MORRIS
OTTAWA MENDOTA
ILLINOIS

PERU ITEP SHARED USE PATH PROJECT
SECTION 23-00073-00-BT
LASALLE COUNTY

PROFILE VIEW
BRIDGE PATH STA. 51+00 TO STA. 57+00

CONSTRUCTION PLANS

CURRENT AS OF: 12/20/2024		
SCALE: AS NOTED	SHEET	33
FILE NO.: 66437.00 Y-	OF	183

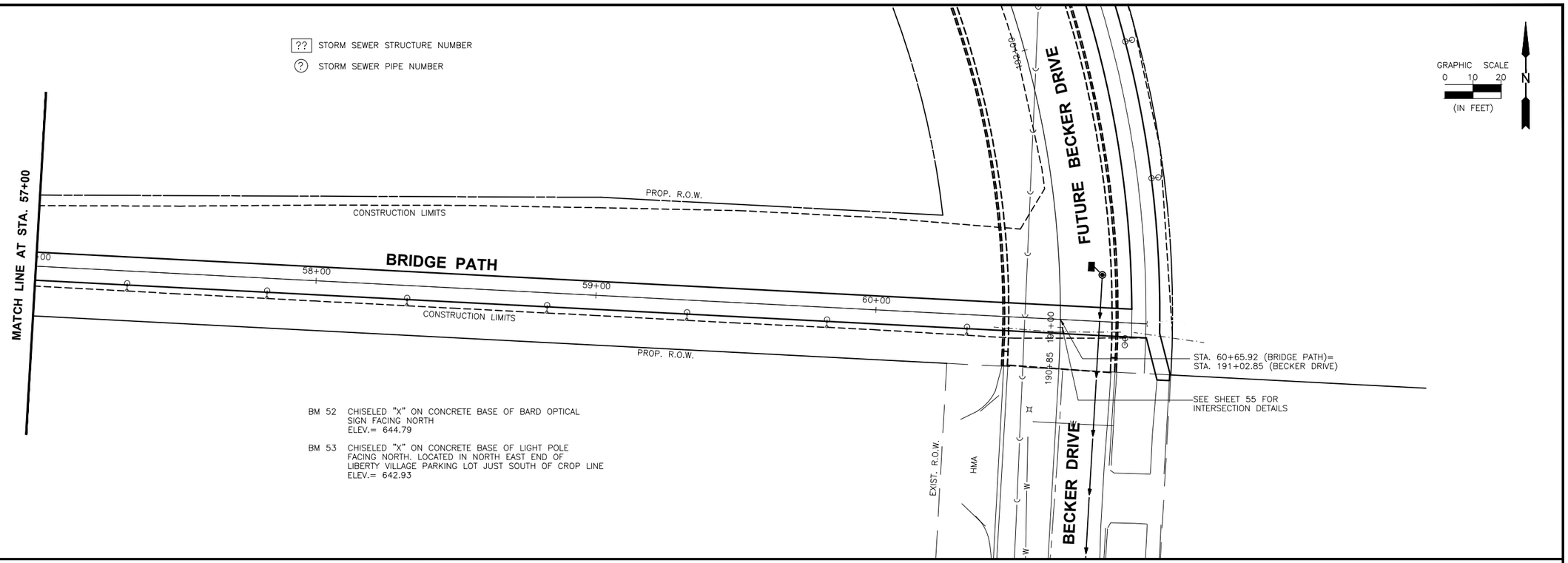

BM 52 CHISELED "X" ON CONCRETE BASE OF BARD OPTICAL SIGN FACING NORTH
ELEV.= 644.79

BM 53 CHISELED "X" ON CONCRETE BASE OF LIGHT POLE FACING NORTH, LOCATED IN NORTH EAST END OF LIBERTY VILLAGE PARKING LOT JUST SOUTH OF CROP LINE
ELEV.= 642.93

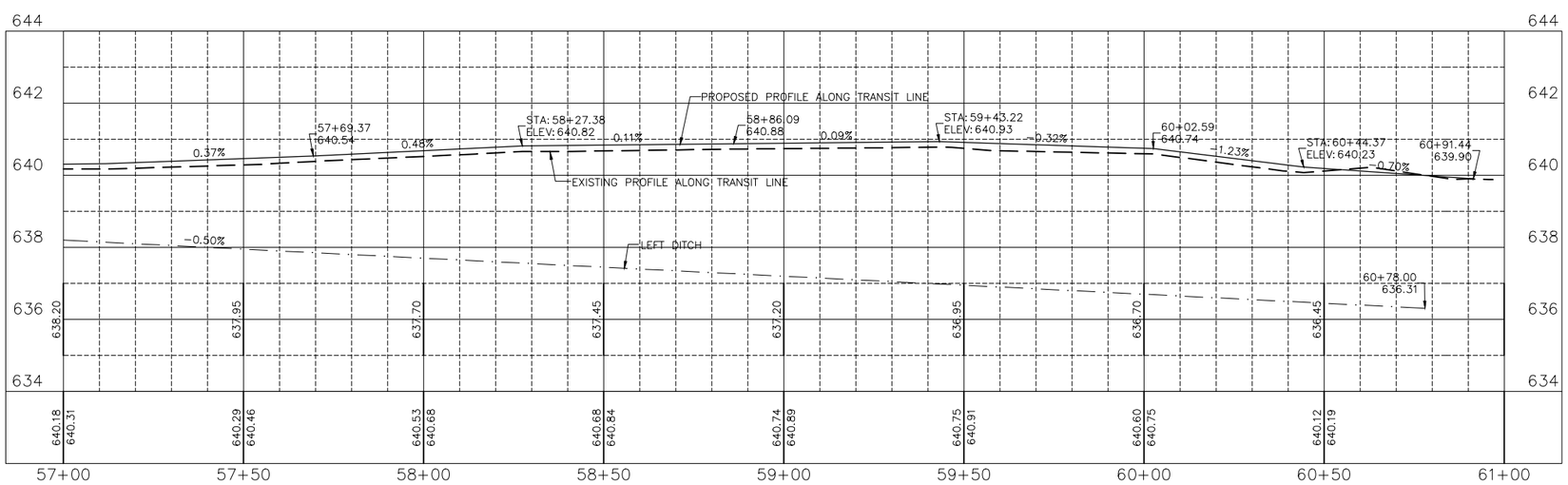

"CONTRACT NO. 87876"

DRAWN BY: LMP	REVISIONS			
CHECKED BY: JKC	LEVEL	BY	DATE	DESCRIPTION
DATE: 06/2023				

Chamlin & Associates

PERU MORRIS
OTTAWA MENDOTA
ILLINOIS

PERU ITEP SHARED USE PATH PROJECT
SECTION 23-00073-00-BT
LASALLE COUNTY

PLAN AND PROFILE
BRIDGE PATH STA. 57+00 TO STA. 62+00

CONSTRUCTION PLANS

CURRENT AS OF: 12/20/2024	
SCALE: AS NOTED	SHEET 34
FILE NO.: 66437.00 Y–	OF 183

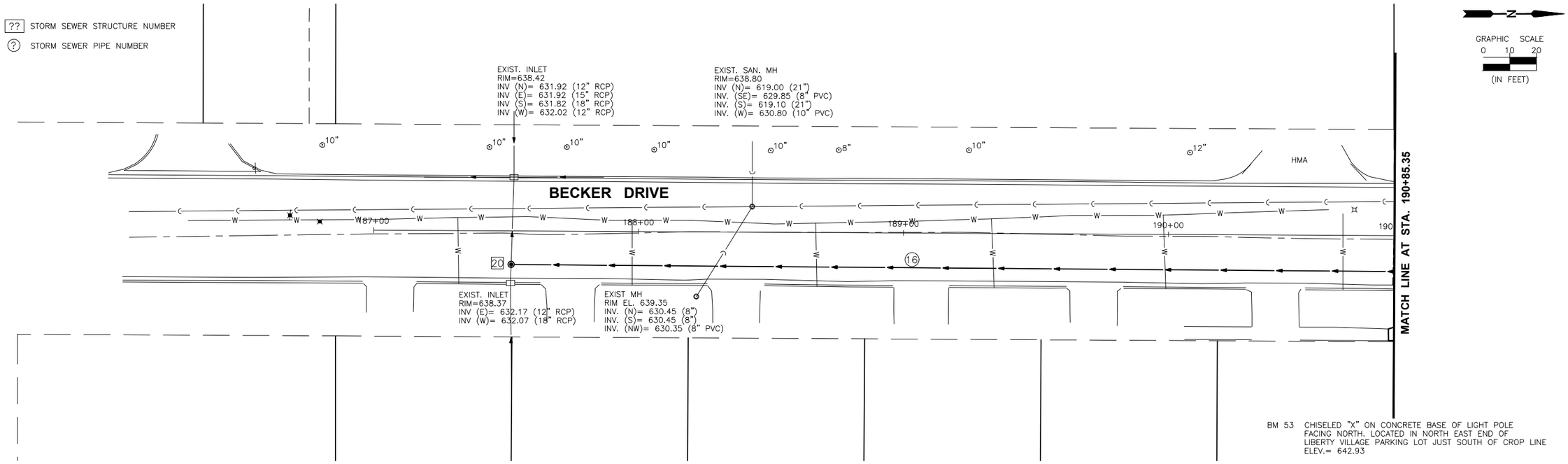

BM 53 CHISELED "X" ON CONCRETE BASE OF LIGHT POLE FACING NORTH. LOCATED IN NORTH EAST END OF LIBERTY VILLAGE PARKING LOT JUST SOUTH OF CROP LINE ELEV.= 642.93

BM1 RAILROAD SPIKE IN POWER POLE NORTH SIDE OF WENZEL ROAD AT SOUTHEAST CORNER OF O'REILLY'S ELEV.= 641.95

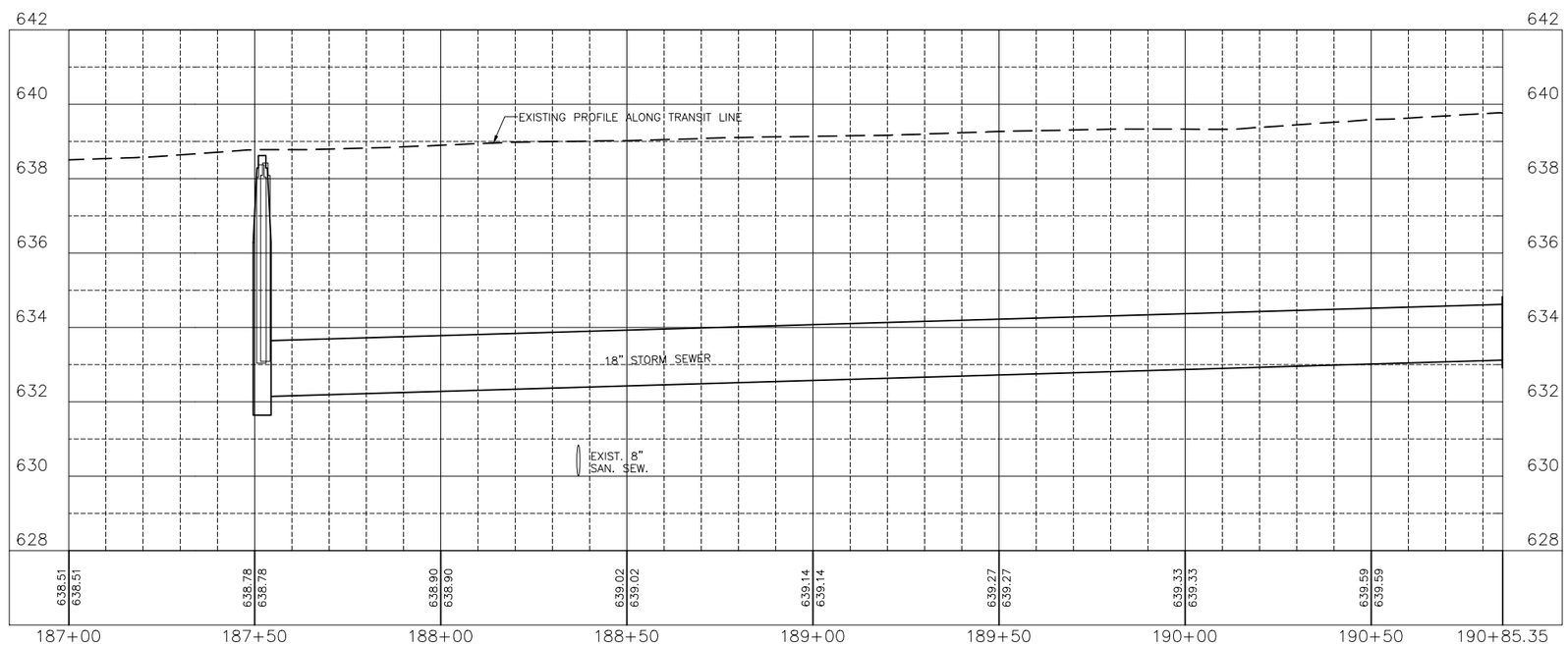

"CONTRACT NO. 87876"

DRAWN BY: LMP	REVISIONS			
CHECKED BY: JKC	LEVEL	BY	DATE	DESCRIPTION
DATE: 06/2023				

Chamlin & Associates

PERU MORRIS
OTTAWA MENDOTA
ILLINOIS

PERU ITEP SHARED USE PATH PROJECT
SECTION 23-00073-00-BT
LASALLE COUNTY

PLAN AND PROFILE
BECKER DR. STA. 187+00 TO STA. 190+00

CONSTRUCTION PLANS

CURRENT AS OF: 12/20/2024	
SCALE: AS NOTED	SHEET 35
FILE NO.: 66437.00 Y-	OF 183

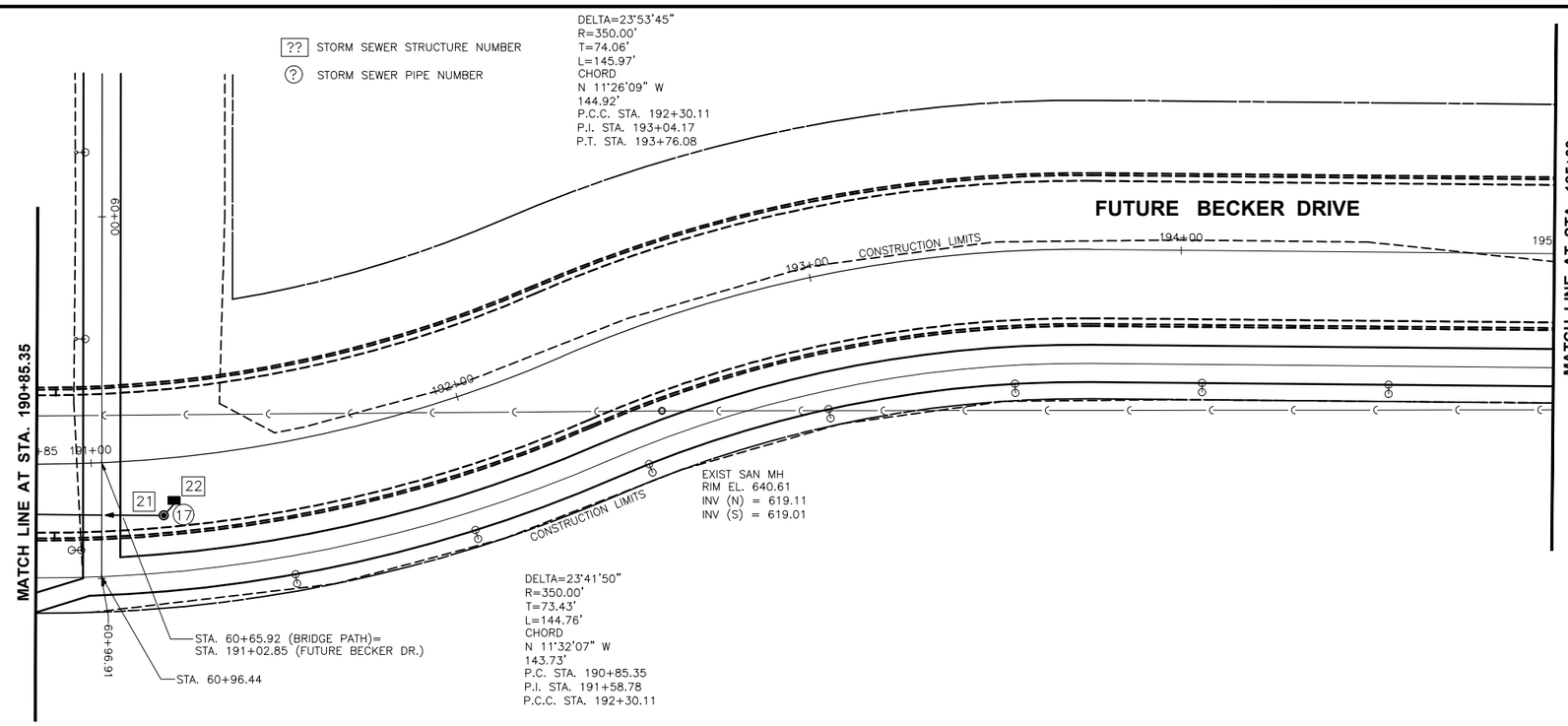

GRAPHIC SCALE
0 10 20
(IN FEET)

BM 53 CHISELED "X" ON CONCRETE BASE OF LIGHT POLE FACING NORTH. LOCATED IN NORTH EAST END OF LIBERTY VILLAGE PARKING LOT JUST SOUTH OF CROP LINE ELEV.= 642.93

BM1 RAILROAD SPIKE IN POWER POLE NORTH SIDE OF WENZEL ROAD AT SOUTHEAST CORNER OF O'REILLY'S ELEV.= 641.95

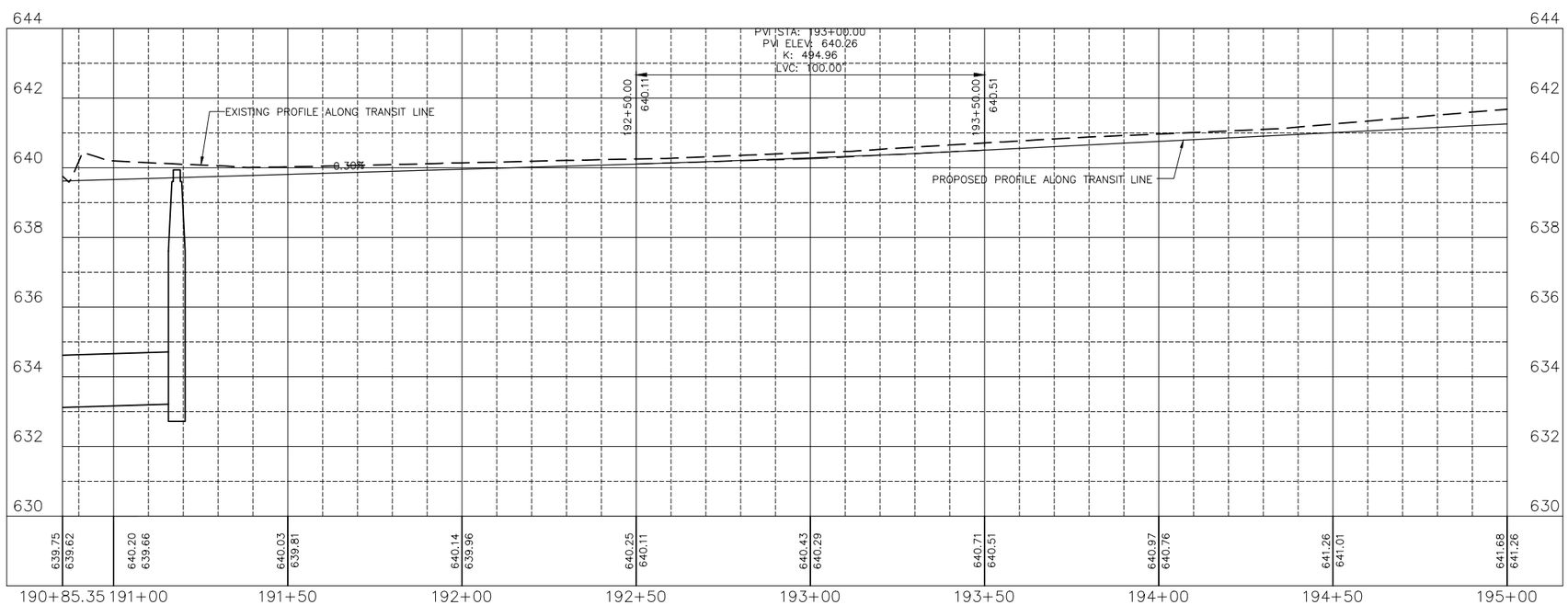

"CONTRACT NO. 87876"

DRAWN BY: LMP	REVISIONS			
CHECKED BY: JKC	LEVEL	BY	DATE	DESCRIPTION
DATE: 06/2023				

Chamlin & Associates

PERU MORRIS
OTTAWA MENDOTA
ILLINOIS

PERU ITEP SHARED USE PATH PROJECT
SECTION 23-00073-00-BT
LASALLE COUNTY

PLAN AND PROFILE
BECKER DR. STA. 190+00 TO STA. 195+00

CONSTRUCTION PLANS

CURRENT AS OF: 12/20/2024	
SCALE: AS NOTED	SHEET 36
FILE NO.: 66437.00 Y-	OF 183

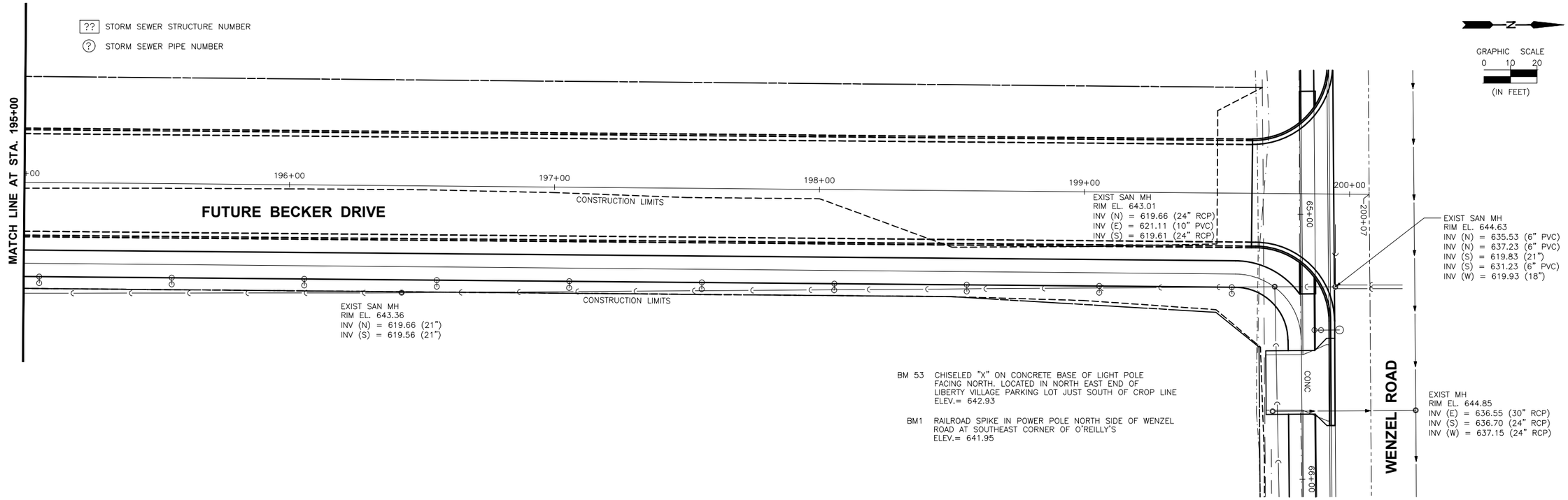

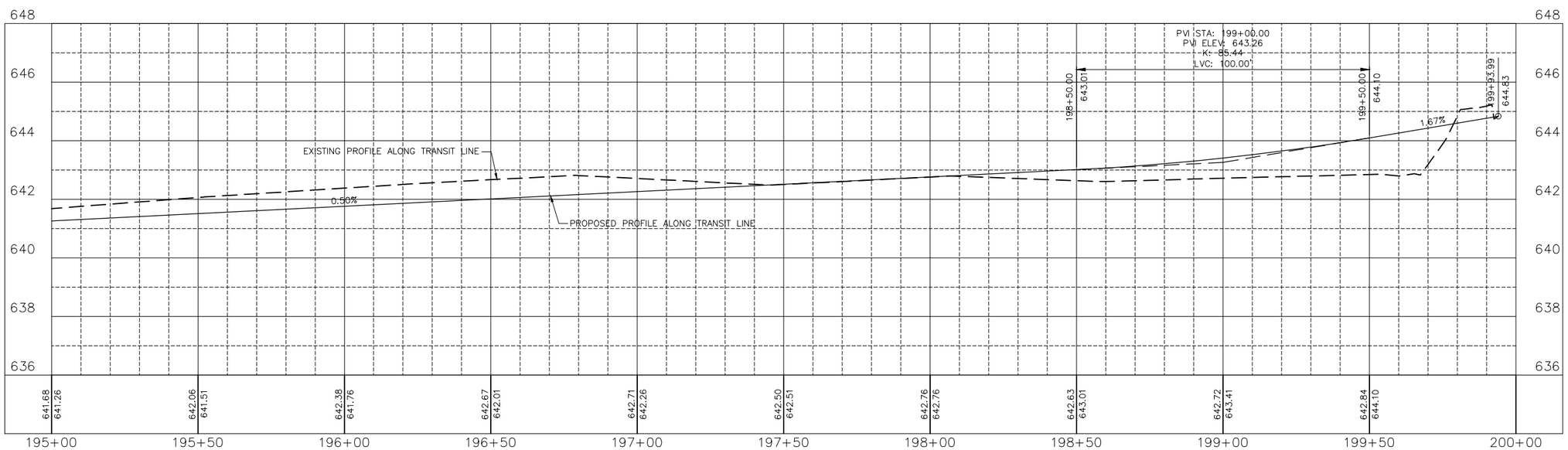

"CONTRACT NO. 87876"

DRAWN BY: LMP	REVISIONS			
CHECKED BY: JKC	LEVEL	BY	DATE	DESCRIPTION
DATE: 06/2023				

Chamlin & Associates

PERU MORRIS
OTTAWA MENDOTA
ILLINOIS

PERU ITEP SHARED USE PATH PROJECT
SECTION 23-00073-00-BT
LASALLE COUNTY

PLAN AND PROFILE
BECKER DR. STA. 195+00 TO STA. 200+00

CONSTRUCTION PLANS

CURRENT AS OF: 12/20/2024	
SCALE: AS NOTED	SHEET 37
FILE NO.: 66437.00 Y–	OF 183

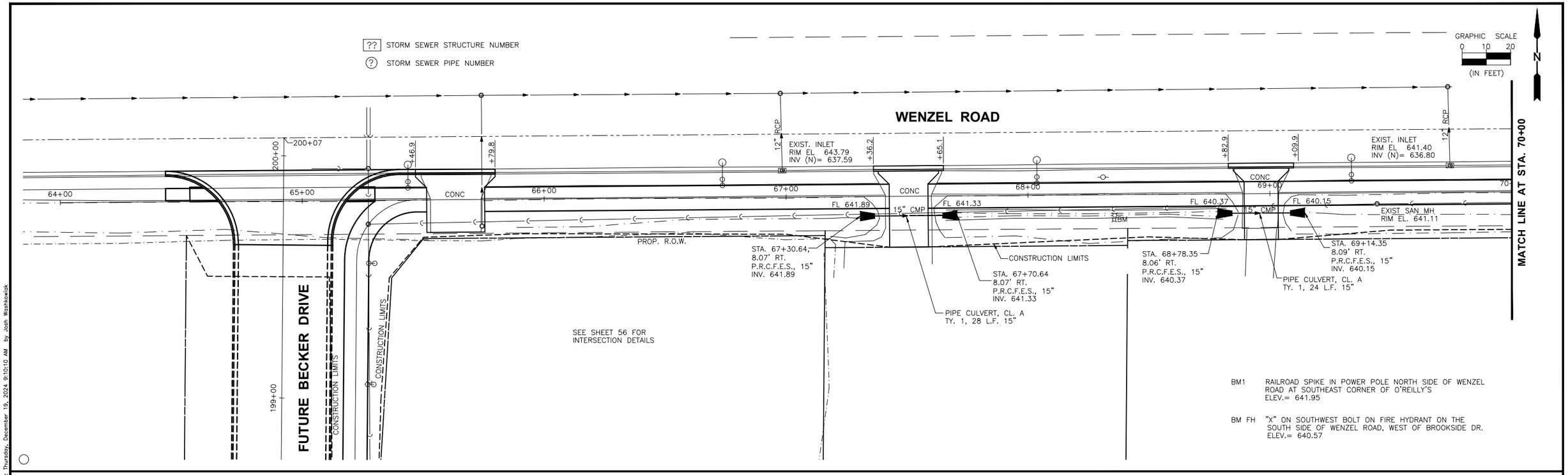

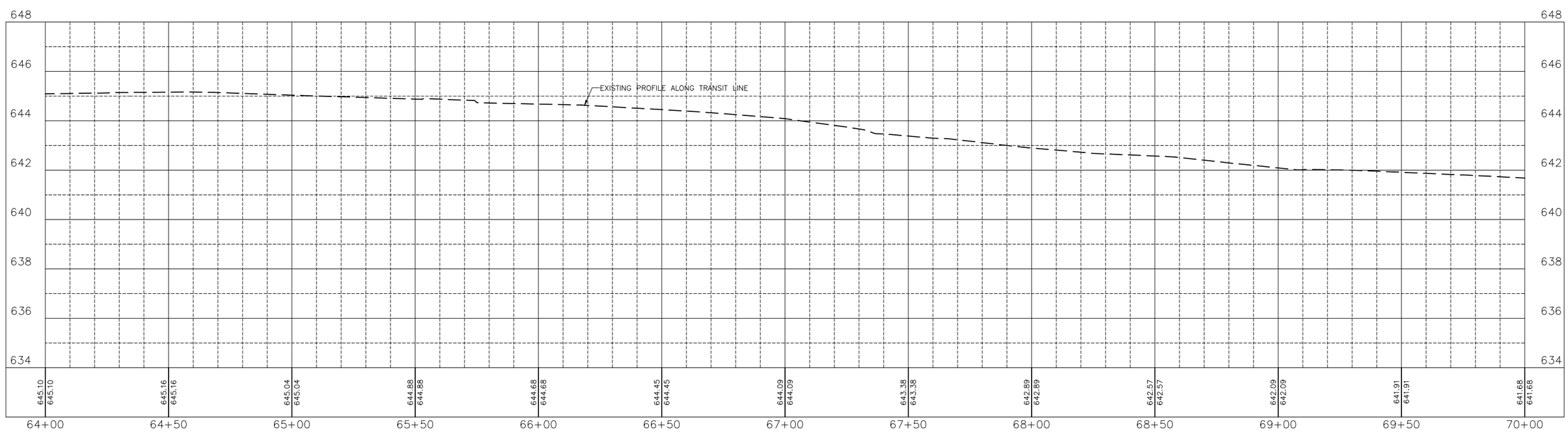

"CONTRACT NO. 87876"

DRAWN BY: LMP	REVISIONS			
CHECKED BY: JKC	LEVEL	BY	DATE	DESCRIPTION
DATE: 06/2023				

Chamlin & Associates

PERU MORRIS
OTTAWA MENDOTA
ILLINOIS

PERU ITEP SHARED USE PATH PROJECT
SECTION 23-00073-00-BT
LASALLE COUNTY

PLAN AND PROFILE
WENZEL ROAD PATH
STA. 65+00 TO STA. 70+00

CONSTRUCTION PLANS

CURRENT AS OF: 12/20/2024	
SCALE: AS NOTED	SHEET 38
FILE NO.: 66437.00 Y-	OF 183

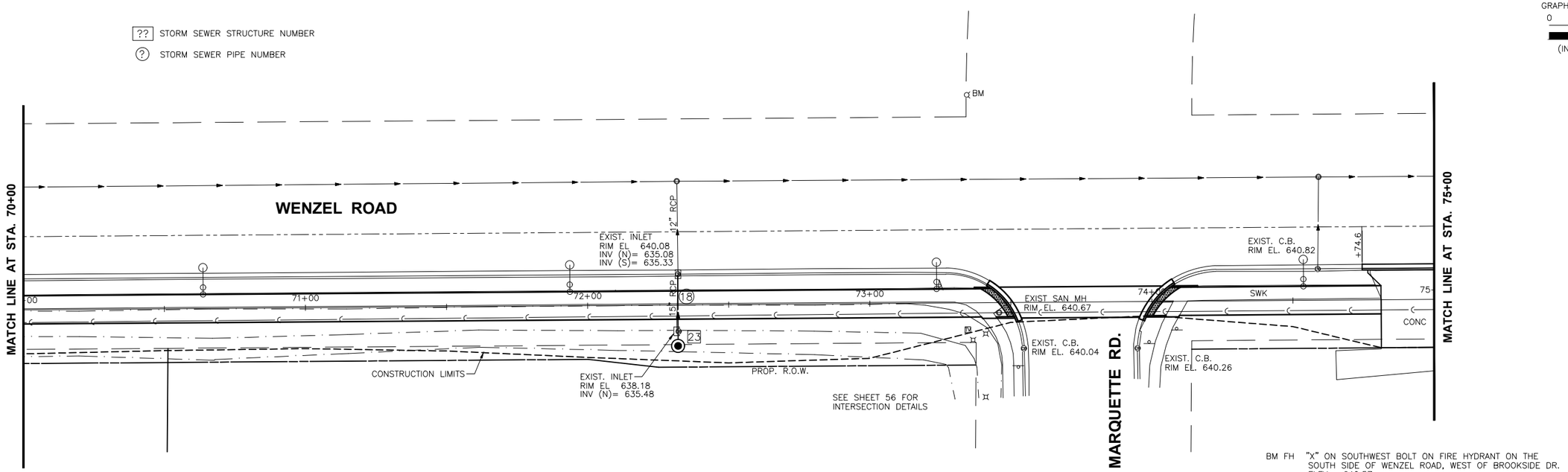

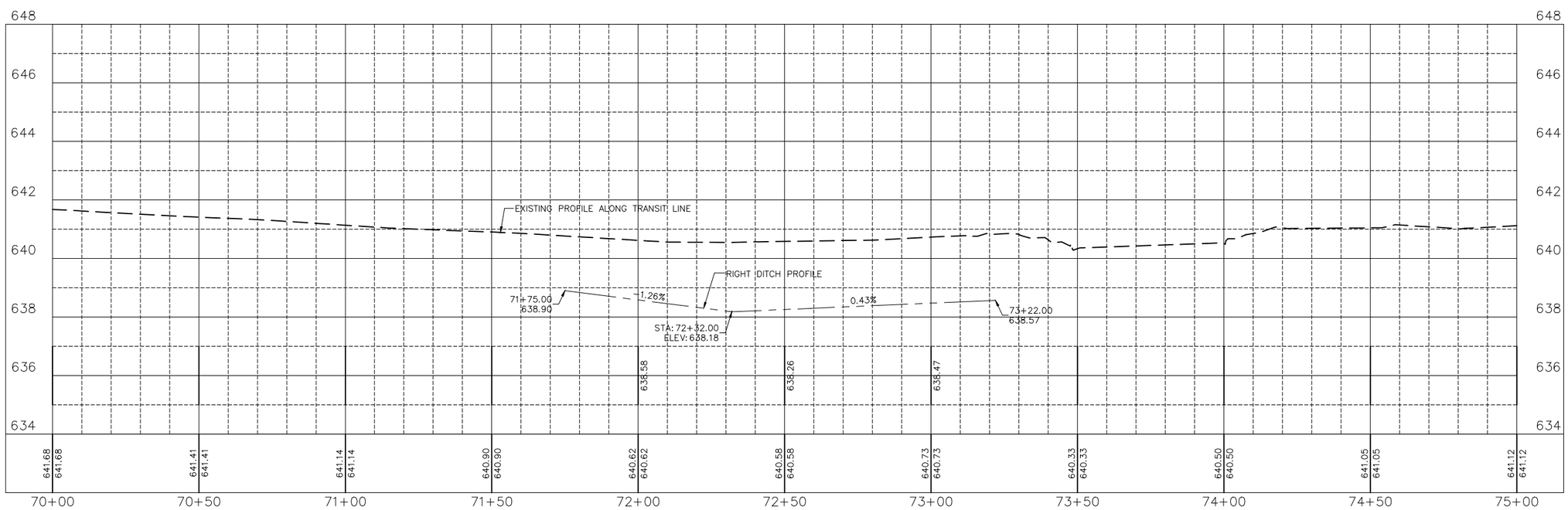

"CONTRACT NO. 87876"

DRAWN BY: LMP	REVISIONS			
CHECKED BY: JKC	LEVEL	BY	DATE	DESCRIPTION
DATE: 06/2023				

Chamlin & Associates

PERU MORRIS
OTTAWA MENDOTA
ILLINOIS

PERU ITEP SHARED USE PATH PROJECT
SECTION 23-00073-00-BT
LASALLE COUNTY

PLAN AND PROFILE
WENZEL ROAD PATH
STA. 70+00 TO STA. 75+00

CONSTRUCTION PLANS

CURRENT AS OF: 12/20/2024	
SCALE: AS NOTED	SHEET 39
FILE NO.: 66437.00 Y–	OF 183

?? STORM SEWER STRUCTURE NUMBER

(?) STORM SEWER PIPE NUMBER

GRAPHIC SCALE
0 10 20
(IN FEET)

N

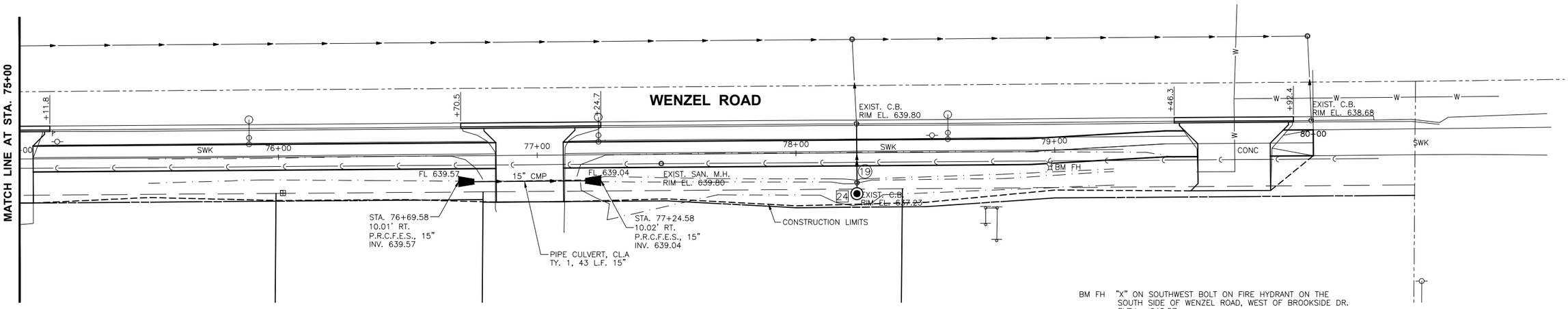

BM FH "X" ON SOUTHWEST BOLT ON FIRE HYDRANT ON THE SOUTH SIDE OF WENZEL ROAD, WEST OF BROOKSIDE DR. ELEV.= 640.57

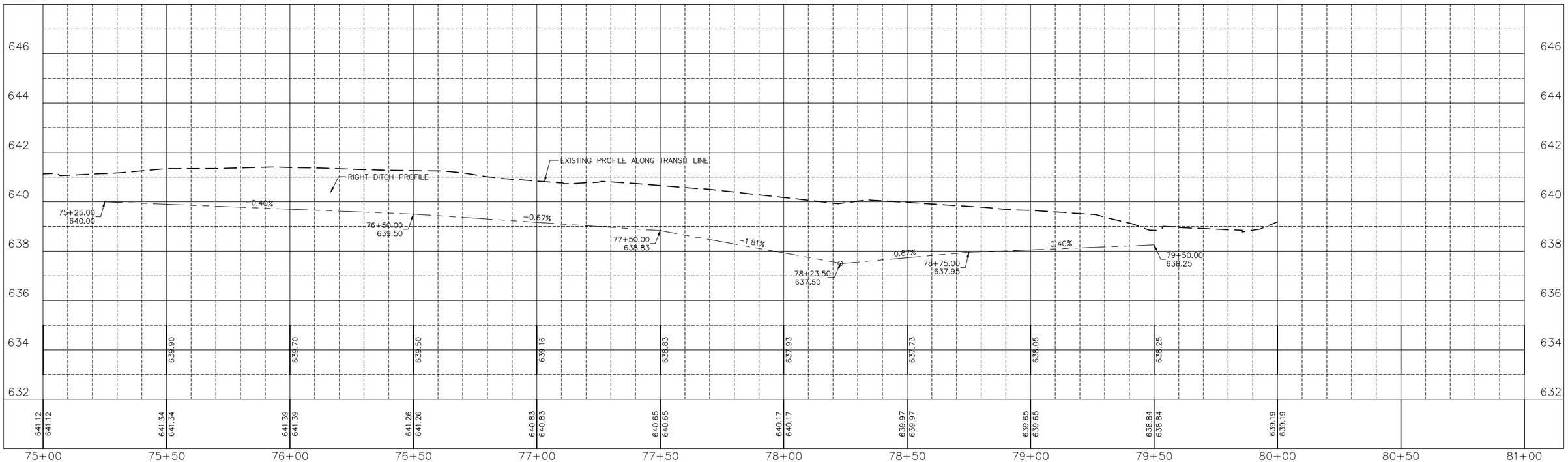

"CONTRACT NO. 87876"

DRAWN BY: LMP	REVISIONS			
CHECKED BY: JKC	LEVEL	BY	DATE	DESCRIPTION
DATE: 06/2023				

Chamlin & Associates

PERU MORRIS
OTTAWA MENDOTA
ILLINOIS

PERU ITEP SHARED USE PATH PROJECT
SECTION 23-00073-00-BT
LASALLE COUNTY

PLAN AND PROFILE
WENZEL ROAD PATH
STA. 75+00 TO STA. 81+00

CONSTRUCTION PLANS

CURRENT AS OF: 12/20/2024	
SCALE: AS NOTED	SHEET 40
FILE NO.: 66437.00 Y-	OF 183

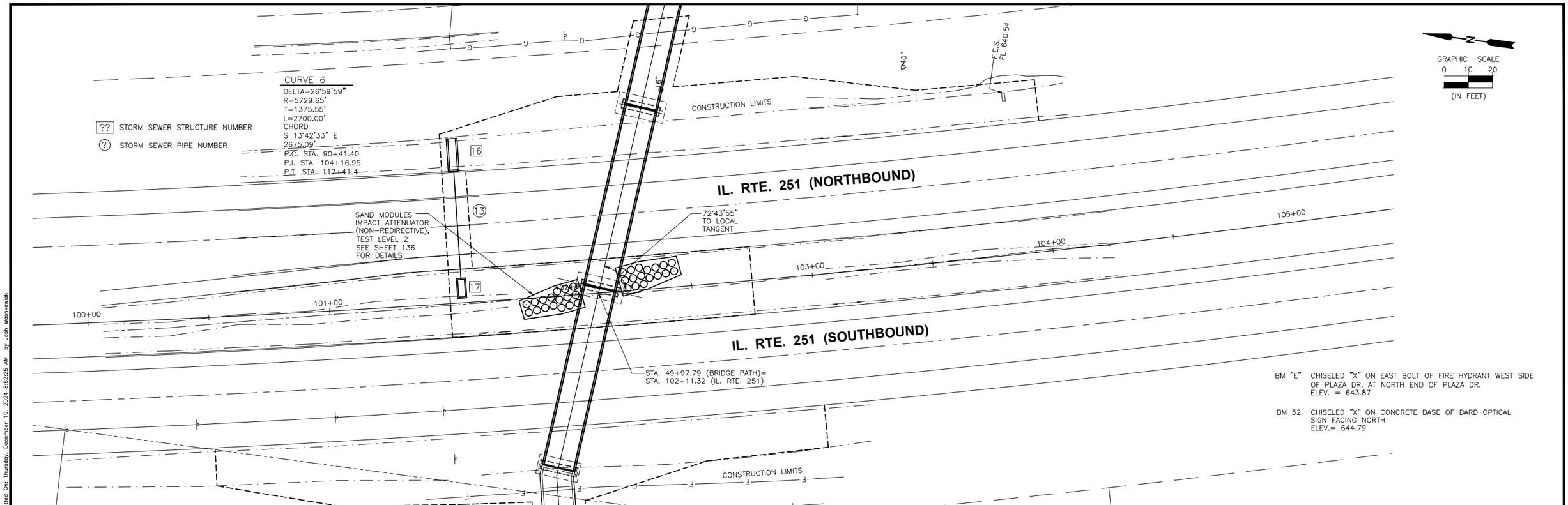

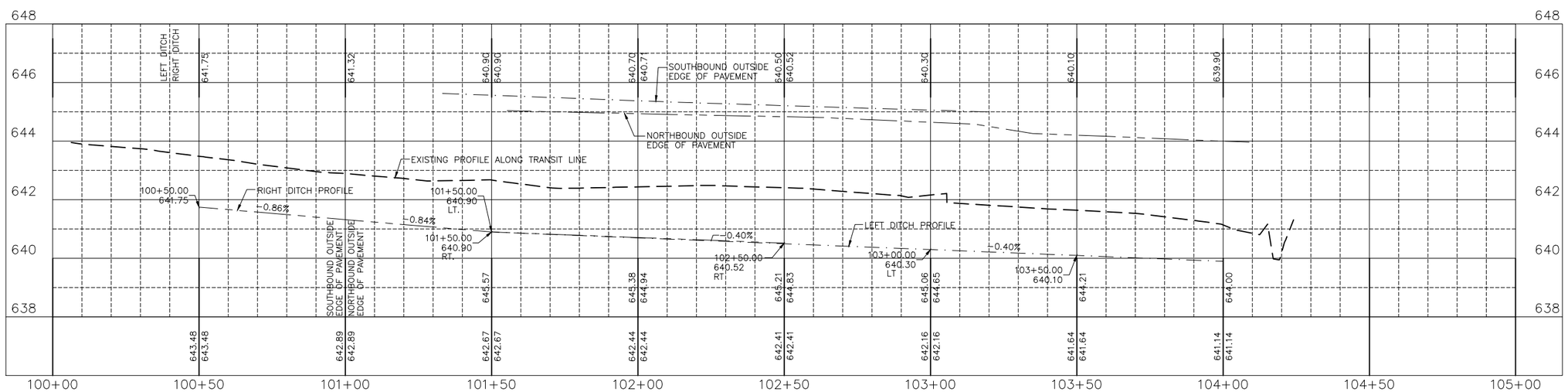

"CONTRACT NO. 87876"

CHAMLIN & ASSOCIATES, INC. © 2022
Drawing Name: G:\Users\GS\66437-00-Peru-2022 ITEP-Recreational Trail\CAD\041-PP251-100-105.dwg Last Modified: Tuesday, December 17, 2024 3:35:46 PM Plotted On: Thursday, December 19, 2024 8:52:25 AM by Josh Washkowick

DRAWN BY: DS	REVISIONS			PERU MORRIS OTTAWA MENDOTA ILLINOIS	PERU ITEP SHARED USE PATH PROJECT SECTION 23-00073-00-BT LASALLE COUNTY
CHECKED BY: JKC	LEVEL	BY	DATE	DESCRIPTION	
DATE: 07/2023					

Chamlin & Associates

PLAN AND PROFILE
IL. RTE. 251 STA. 100+00 TO STA. 105+00

CONSTRUCTION PLANS

CURRENT AS OF: 12/20/2024	
SCALE: AS NOTED	SHEET 41
FILE NO.: 66437.00 Y-	OF 183

TRAFFIC CONTROL NOTES

TRAFFIC CONTROL AND PROTECTION FOR WORK ON OR ADJACENT TO PLAZA DRIVE SHALL BE IN ACCORDANCE WITH HIGHWAY STANDARD 701502.

TRAFFIC CONTROL AND PROTECTION FOR WORK ON OR ADJACENT TO WENZEL ROAD SHALL BE IN ACCORDANCE WITH HIGHWAY STANDARD 701502.

TRAFFIC CONTROL AND PROTECTION FOR WORK ON OR ADJACENT TO BECKER DRIVE SHALL BE IN ACCORDANCE WITH HIGHWAY STANDARD 701501.

TRAFFIC CONTROL AND PROTECTION FOR WORK TO CONSTRUCT THE BRIDGE PIER IN THE IL 251 MEDIAN SHALL BE IN ACCORDANCE WITH THE TRAFFIC CONTROL PLANS.

TRAFFIC CONTROL AND PROTECTION FOR WORK TO CONSTRUCT THE BRIDGE PIERS EITHER SIDE OF IL 251 SHALL BE IN ACCORDANCE WITH HIGHWAY STANDARD 701101 AND THE TRAFFIC CONTROL PLANS.

TRAFFIC CONTROL AND PROTECTION FOR WORK TO CONSTRUCT THE BRIDGE PIER JUST EAST OF FRONTAGE ROAD SHALL BE IN ACCORDANCE WITH HIGHWAY STANDARD 701501.

TRAFFIC CONTROL AND PROTECTION FOR WORK TO EITHER SIDE OF IL 251 AND IN THE MEDIAN OF IL 251 SHALL BE IN ACCORDANCE WITH HIGHWAY STANDARD 701101.

WORK TO ERECT THE PEDESTRIAN BRIDGE TRUSS SPANS SHALL BE DONE BETWEEN THE HOURS OF 10PM AND 5AM. EMERGENCY SERVICE PROVIDERS AND THE ILLINOIS DEPARTMENT OF TRANSPORTATION SHALL BE GIVEN 48 HOUR NOTICE PRIOR TO STARTING THIS WORK.

TRAFFIC CONTROL AND PROTECTION FOR WORK TO ERECT THE PEDESTRIAN BRIDGE TRUSS SPANS OVER IL 251 SHALL BE IN ACCORDANCE WITH THE TRAFFIC CONTROL PLANS.

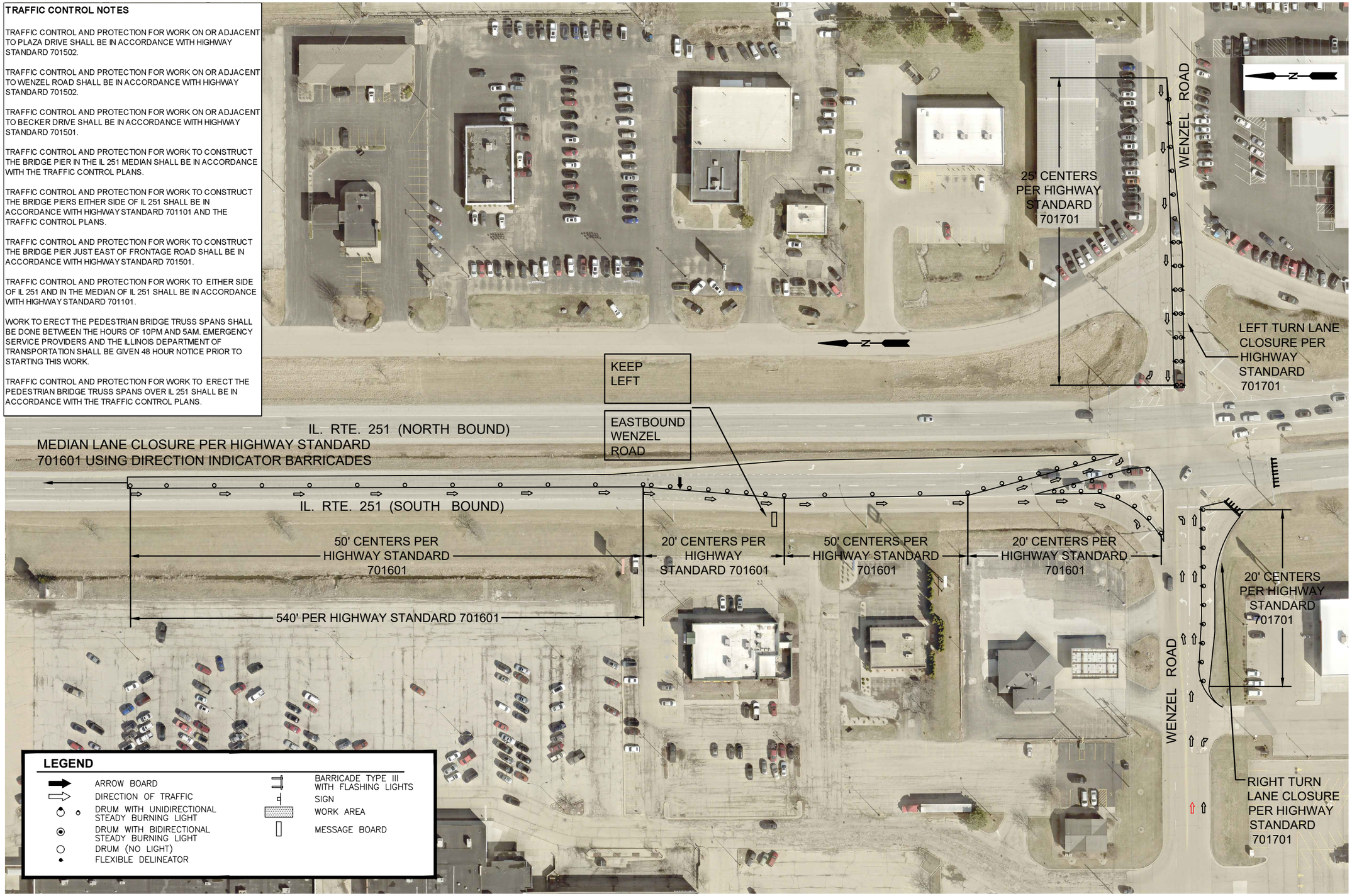

"CONTRACT NO. 87876"

DRAWN BY: CA	REVISIONS				
CHECKED BY: JKC	LEVEL	BY	DATE	DESCRIPTION	
DATE: 06/2023					

Chamlin & Associates

PERU MORRIS
OTTAWA MENDOTA
ILLINOIS

PERU ITEP SHARED USE PATH PROJECT
CITY OF PERU, ILLINOIS

TRAFFIC CONTROL PLAN
SOUTHBOUND IL-251 AT WENZEL ROAD

CONSTRUCTION PLANS

CURRENT AS OF: 12/20/2024			
SCALE: AS NOTED	SHEET	42	
FILE NO.: 66437.00 Y-	OF	183	

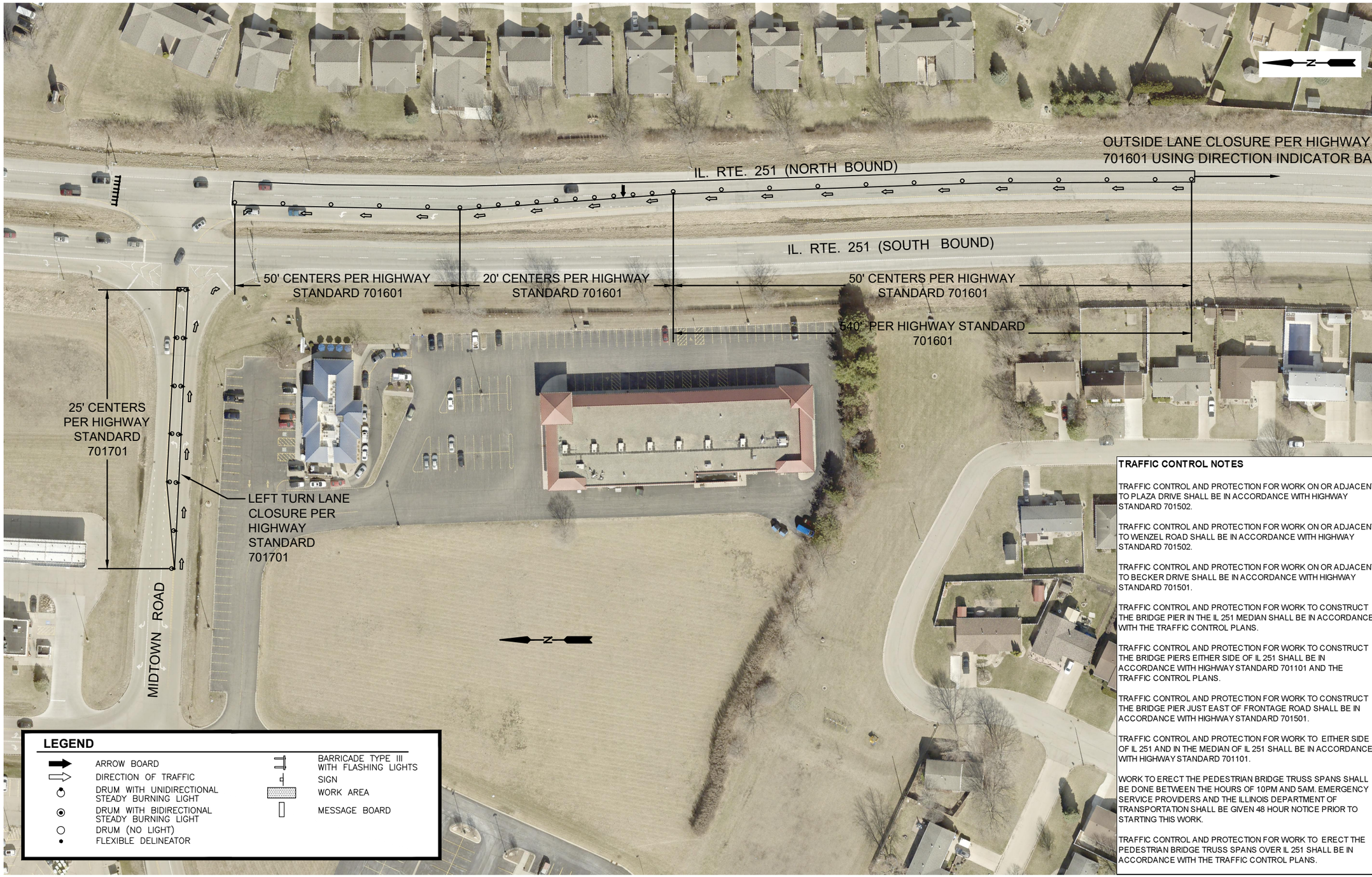

TRAFFIC CONTROL NOTES

TRAFFIC CONTROL AND PROTECTION FOR WORK ON OR ADJACENT TO PLAZA DRIVE SHALL BE IN ACCORDANCE WITH HIGHWAY STANDARD 701502.

TRAFFIC CONTROL AND PROTECTION FOR WORK ON OR ADJACENT TO WENZEL ROAD SHALL BE IN ACCORDANCE WITH HIGHWAY STANDARD 701502.

TRAFFIC CONTROL AND PROTECTION FOR WORK ON OR ADJACENT TO BECKER DRIVE SHALL BE IN ACCORDANCE WITH HIGHWAY STANDARD 701501.

TRAFFIC CONTROL AND PROTECTION FOR WORK TO CONSTRUCT THE BRIDGE PIER IN THE IL 251 MEDIAN SHALL BE IN ACCORDANCE WITH THE TRAFFIC CONTROL PLANS.

TRAFFIC CONTROL AND PROTECTION FOR WORK TO CONSTRUCT THE BRIDGE PIERS EITHER SIDE OF IL 251 SHALL BE IN ACCORDANCE WITH HIGHWAY STANDARD 701101 AND THE TRAFFIC CONTROL PLANS.

TRAFFIC CONTROL AND PROTECTION FOR WORK TO CONSTRUCT THE BRIDGE PIER JUST EAST OF FRONTAGE ROAD SHALL BE IN ACCORDANCE WITH HIGHWAY STANDARD 701501.

TRAFFIC CONTROL AND PROTECTION FOR WORK TO EITHER SIDE OF IL 251 AND IN THE MEDIAN OF IL 251 SHALL BE IN ACCORDANCE WITH HIGHWAY STANDARD 701101.

WORK TO ERECT THE PEDESTRIAN BRIDGE TRUSS SPANS SHALL BE DONE BETWEEN THE HOURS OF 10PM AND 5AM. EMERGENCY SERVICE PROVIDERS AND THE ILLINOIS DEPARTMENT OF TRANSPORTATION SHALL BE GIVEN 48 HOUR NOTICE PRIOR TO STARTING THIS WORK.

TRAFFIC CONTROL AND PROTECTION FOR WORK TO ERECT THE PEDESTRIAN BRIDGE TRUSS SPANS OVER IL 251 SHALL BE IN ACCORDANCE WITH THE TRAFFIC CONTROL PLANS.

"CONTRACT NO. 87876"

DRAWN BY: CA	REVISIONS				
CHECKED BY: JKC	LEVEL	BY	DATE	DESCRIPTION	
DATE: 06/2023					

Chamlin & Associates

PERU MORRIS
OTTAWA MENDOTA
ILLINOIS

PERU ITEP SHARED USE PATH PROJECT
CITY OF PERU, ILLINOIS

TRAFFIC CONTROL PLAN
NORTHBOUND IL-251 AT MIDTOWN ROAD

CONSTRUCTION PLANS

CURRENT AS OF: 12/20/2024		
SCALE: AS NOTED	SHEET	43
FILE NO.: 66437.00 Y–	OF	183

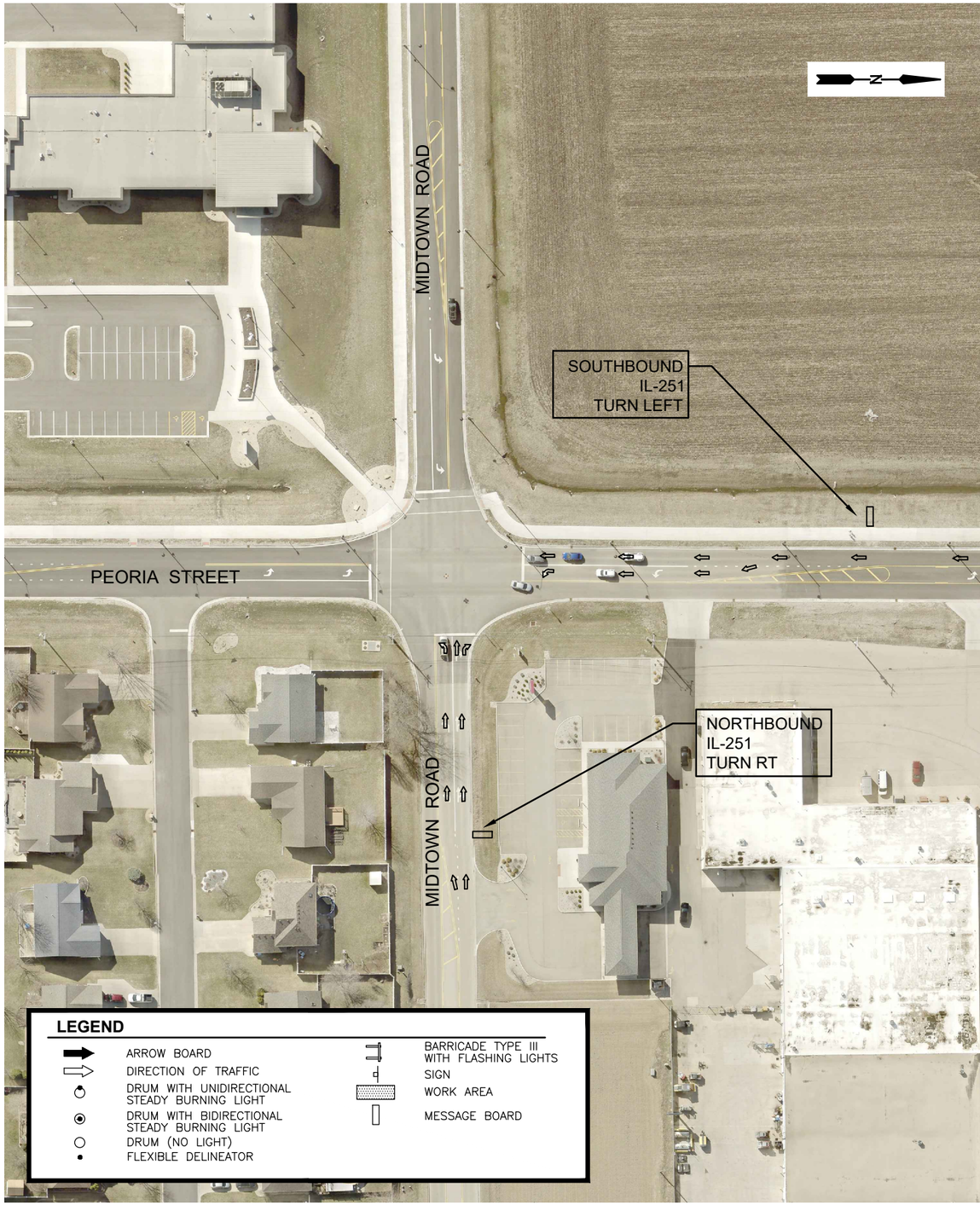

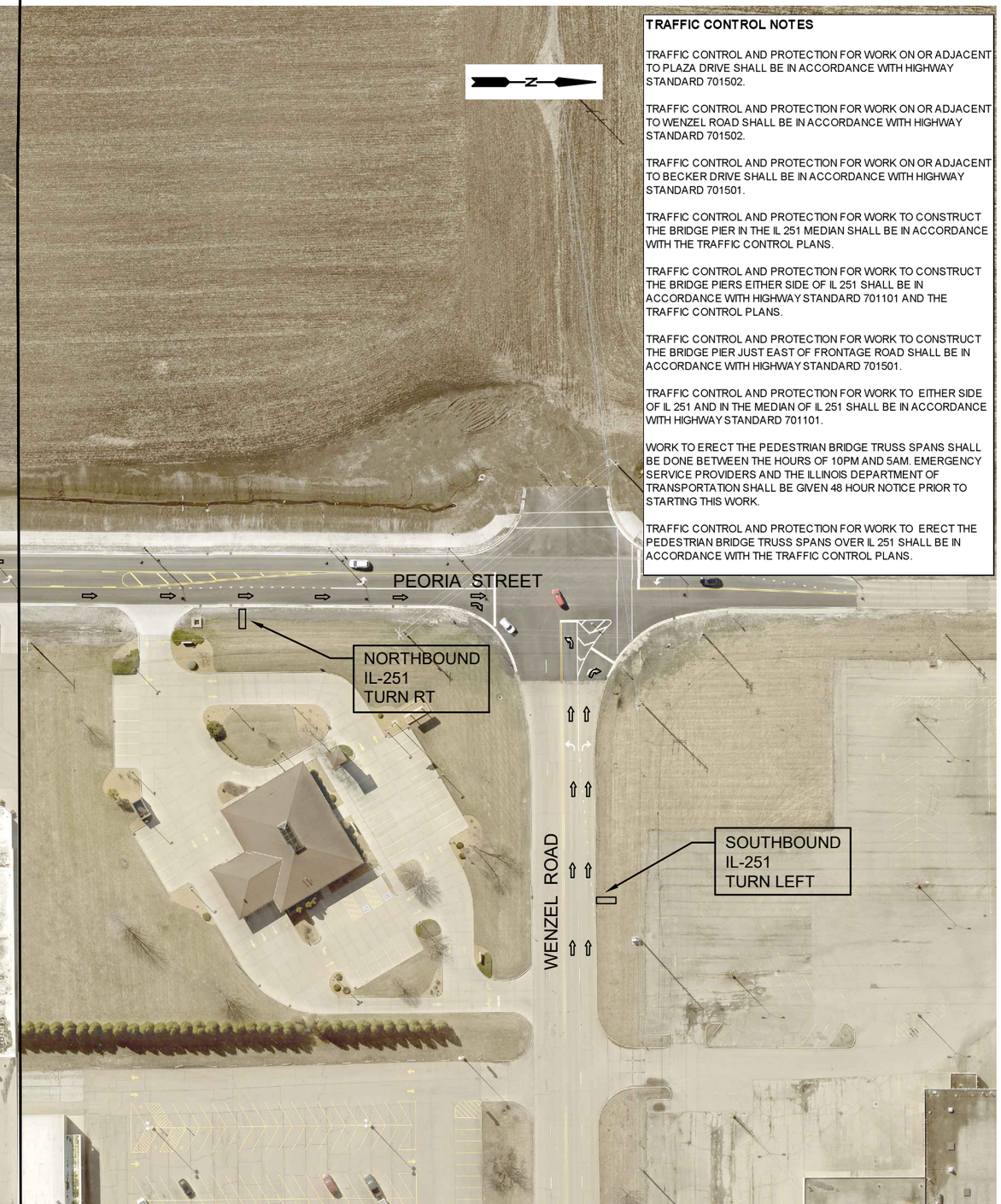

TRAFFIC CONTROL NOTES

TRAFFIC CONTROL AND PROTECTION FOR WORK ON OR ADJACENT TO PLAZA DRIVE SHALL BE IN ACCORDANCE WITH HIGHWAY STANDARD 701502.

TRAFFIC CONTROL AND PROTECTION FOR WORK ON OR ADJACENT TO WENZEL ROAD SHALL BE IN ACCORDANCE WITH HIGHWAY STANDARD 701502.

TRAFFIC CONTROL AND PROTECTION FOR WORK ON OR ADJACENT TO BECKER DRIVE SHALL BE IN ACCORDANCE WITH HIGHWAY STANDARD 701501.

TRAFFIC CONTROL AND PROTECTION FOR WORK TO CONSTRUCT THE BRIDGE PIER IN THE IL 251 MEDIAN SHALL BE IN ACCORDANCE WITH THE TRAFFIC CONTROL PLANS.

TRAFFIC CONTROL AND PROTECTION FOR WORK TO CONSTRUCT THE BRIDGE PIERS EITHER SIDE OF IL 251 SHALL BE IN ACCORDANCE WITH HIGHWAY STANDARD 701101 AND THE TRAFFIC CONTROL PLANS.

TRAFFIC CONTROL AND PROTECTION FOR WORK TO CONSTRUCT THE BRIDGE PIER JUST EAST OF FRONTAGE ROAD SHALL BE IN ACCORDANCE WITH HIGHWAY STANDARD 701501.

TRAFFIC CONTROL AND PROTECTION FOR WORK TO EITHER SIDE OF IL 251 AND IN THE MEDIAN OF IL 251 SHALL BE IN ACCORDANCE WITH HIGHWAY STANDARD 701101.

WORK TO ERECT THE PEDESTRIAN BRIDGE TRUSS SPANS SHALL BE DONE BETWEEN THE HOURS OF 10PM AND 5AM. EMERGENCY SERVICE PROVIDERS AND THE ILLINOIS DEPARTMENT OF TRANSPORTATION SHALL BE GIVEN 48 HOUR NOTICE PRIOR TO STARTING THIS WORK.

TRAFFIC CONTROL AND PROTECTION FOR WORK TO ERECT THE PEDESTRIAN BRIDGE TRUSS SPANS OVER IL 251 SHALL BE IN ACCORDANCE WITH THE TRAFFIC CONTROL PLANS.

"CONTRACT NO. 87876"

DRAWN BY: CA	REVISIONS			
CHECKED BY: JKC	LEVEL	BY	DATE	DESCRIPTION
DATE: 06/2023				

Chamlin & Associates

PERU MORRIS
OTTAWA MENDOTA
ILLINOIS

PERU ITEP SHARED USE PATH PROJECT
CITY OF PERU, ILLINOIS

TRAFFIC CONTROL PLAN
MIDTOWN ROAD AT PEORIA STREET
PEORIA STREET AT WENZEL ROAD

CONSTRUCTION PLANS

CURRENT AS OF: 12/20/2024		
SCALE: AS NOTED	SHEET	44
FILE NO.: 66437.00 Y–	OF	183

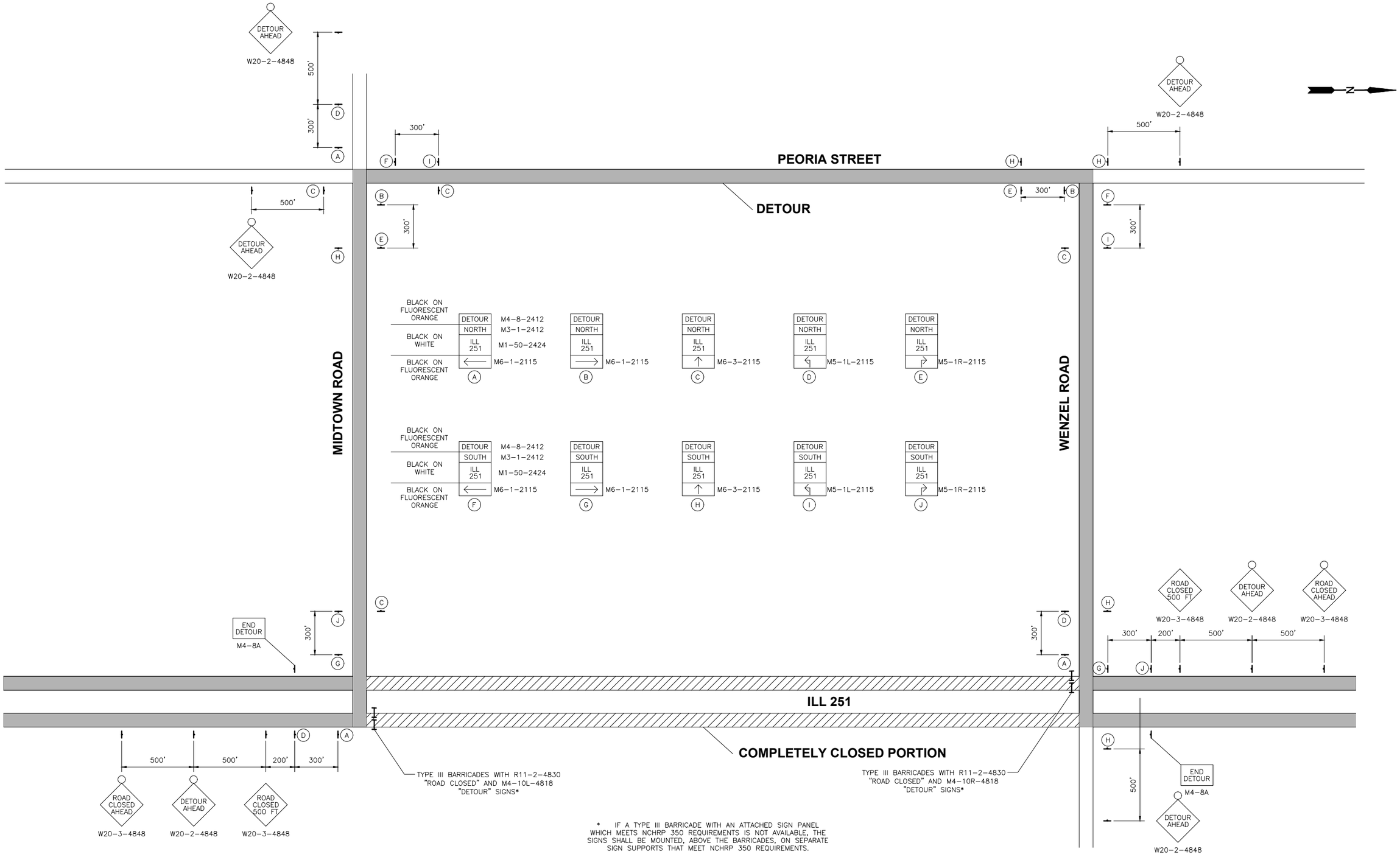

* IF A TYPE III BARRICADE WITH AN ATTACHED SIGN PANEL WHICH MEETS NCHRP 350 REQUIREMENTS IS NOT AVAILABLE, THE SIGNS SHALL BE MOUNTED, ABOVE THE BARRICADES, ON SEPARATE SIGN SUPPORTS THAT MEET NCHRP 350 REQUIREMENTS.

DETOUR SIGNS SHALL REMAIN COVERED UNTIL NEEDED.

DRAWN BY: DS	REVISIONS			
CHECKED BY: JKC	LEVEL	BY	DATE	DESCRIPTION
DATE: 01/2025				

Chamlin & Associates

PERU MORRIS
OTTAWA MENDOTA
ILLINOIS

PERU ITEP SHARED USE PATH PROJECT
SECTION 23-00073-00-BT
LASALLE COUNTY

TRAFFIC CONTROL PLAN
DETOUR SIGNS

CONSTRUCTION PLANS

CURRENT AS OF: 01/15/2025
SCALE: AS NOTED
SHEET 44A
FILE NO.: 66437.00 Y-
OF 183

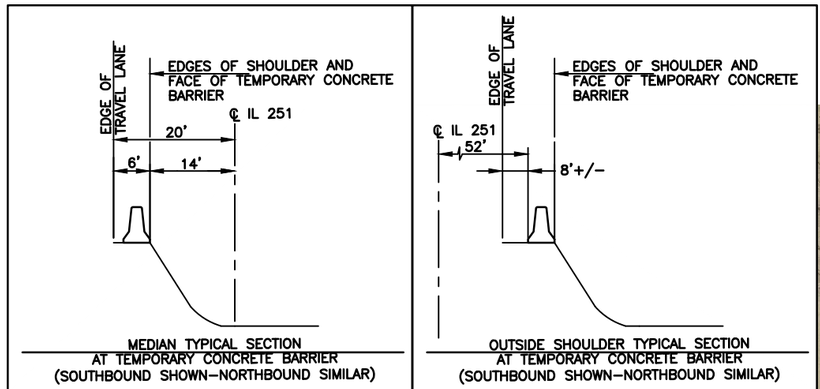

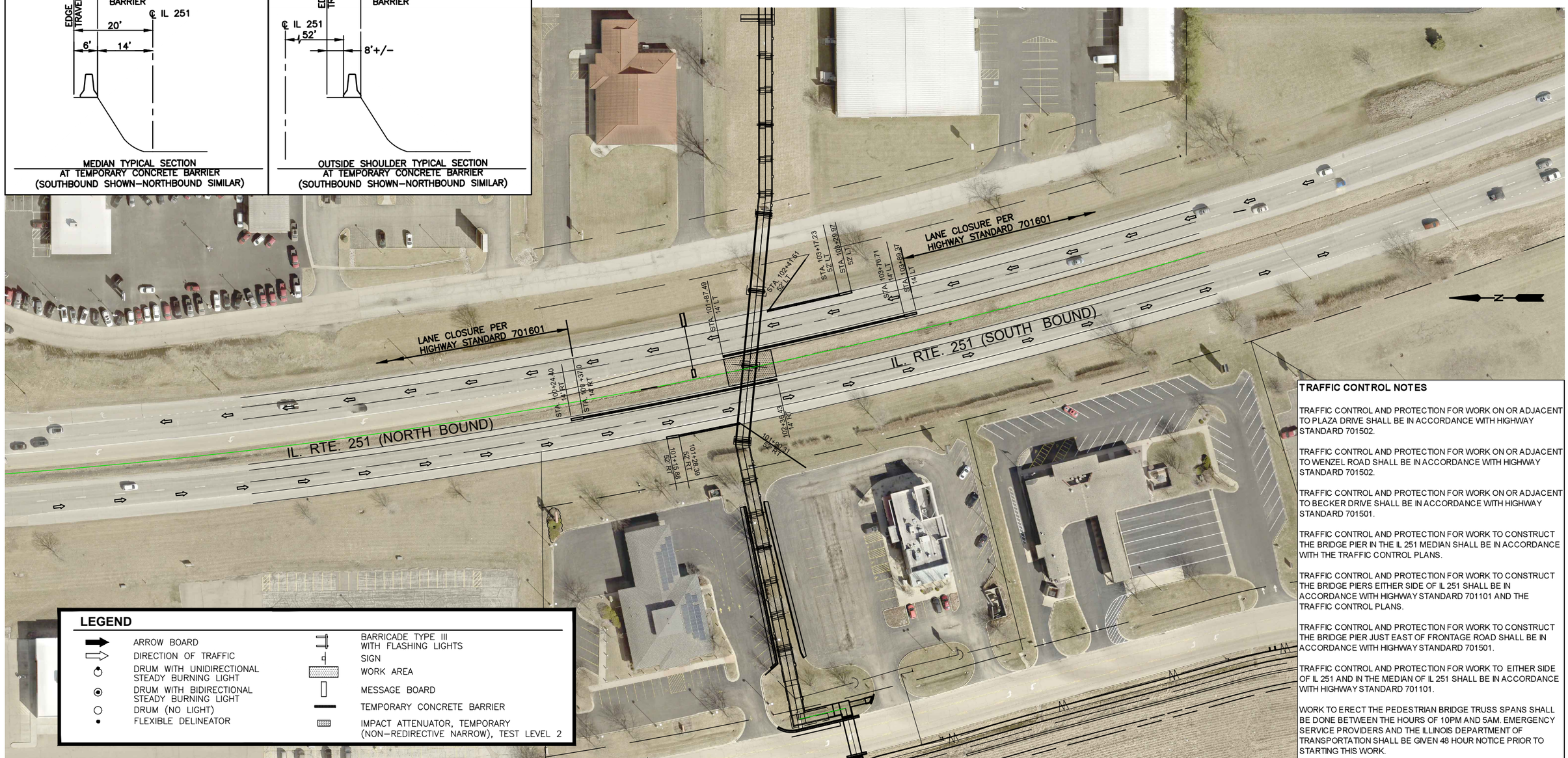

TRAFFIC CONTROL NOTES

TRAFFIC CONTROL AND PROTECTION FOR WORK ON OR ADJACENT TO PLAZA DRIVE SHALL BE IN ACCORDANCE WITH HIGHWAY STANDARD 701502.

TRAFFIC CONTROL AND PROTECTION FOR WORK ON OR ADJACENT TO WENZEL ROAD SHALL BE IN ACCORDANCE WITH HIGHWAY STANDARD 701502.

TRAFFIC CONTROL AND PROTECTION FOR WORK ON OR ADJACENT TO BECKER DRIVE SHALL BE IN ACCORDANCE WITH HIGHWAY STANDARD 701501.

TRAFFIC CONTROL AND PROTECTION FOR WORK TO CONSTRUCT THE BRIDGE PIER IN THE IL 251 MEDIAN SHALL BE IN ACCORDANCE WITH THE TRAFFIC CONTROL PLANS.

TRAFFIC CONTROL AND PROTECTION FOR WORK TO CONSTRUCT THE BRIDGE PIERS EITHER SIDE OF IL 251 SHALL BE IN ACCORDANCE WITH HIGHWAY STANDARD 701101 AND THE TRAFFIC CONTROL PLANS.

TRAFFIC CONTROL AND PROTECTION FOR WORK TO CONSTRUCT THE BRIDGE PIER JUST EAST OF FRONTAGE ROAD SHALL BE IN ACCORDANCE WITH HIGHWAY STANDARD 701501.

TRAFFIC CONTROL AND PROTECTION FOR WORK TO EITHER SIDE OF IL 251 AND IN THE MEDIAN OF IL 251 SHALL BE IN ACCORDANCE WITH HIGHWAY STANDARD 701101.

WORK TO ERECT THE PEDESTRIAN BRIDGE TRUSS SPANS SHALL BE DONE BETWEEN THE HOURS OF 10PM AND 5AM. EMERGENCY SERVICE PROVIDERS AND THE ILLINOIS DEPARTMENT OF TRANSPORTATION SHALL BE GIVEN 48 HOUR NOTICE PRIOR TO STARTING THIS WORK.

TRAFFIC CONTROL AND PROTECTION FOR WORK TO ERECT THE PEDESTRIAN BRIDGE TRUSS SPANS OVER IL 251 SHALL BE IN ACCORDANCE WITH THE TRAFFIC CONTROL PLANS.

TRAFFIC CONTROL SHOWN ON THIS SHEET SHALL BE IN PLACE TO CONSTRUCT THE MEDIAN AND IMMEDIATELY ADJACENT BRIDGE PIERS

"CONTRACT NO. 87876"

DRAWN BY: CA	REVISIONS			
CHECKED BY: JKC	LEVEL	BY	DATE	DESCRIPTION
DATE: 06/2023				

Chamlin & Associates

PERU MORRIS
OTTAWA MENDOTA
ILLINOIS

PERU ITEP SHARED USE PATH PROJECT
CITY OF PERU, ILLINOIS

TRAFFIC CONTROL PLAN
IL. ROUTE 251

CONSTRUCTION PLANS

CURRENT AS OF: 12/20/2024		
SCALE: AS NOTED	SHEET	45
FILE NO.: 66437.00 Y–	OF	183

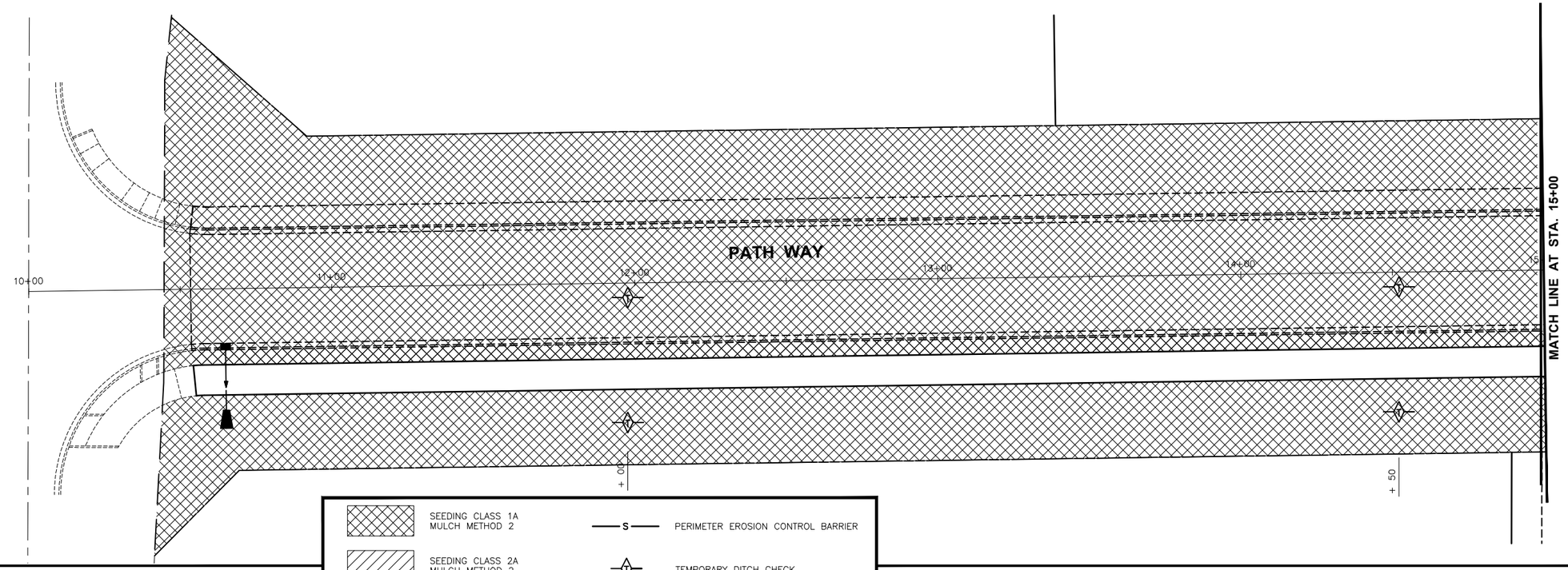

SEEDING CLASS 1A
MULCH METHOD 2

SEEDING CLASS 2A
MULCH METHOD 2

SOD

S — PERIMETER EROSION CONTROL BARRIER

TEMPORARY DITCH CHECK

INLET AND PIPE PROTECTION

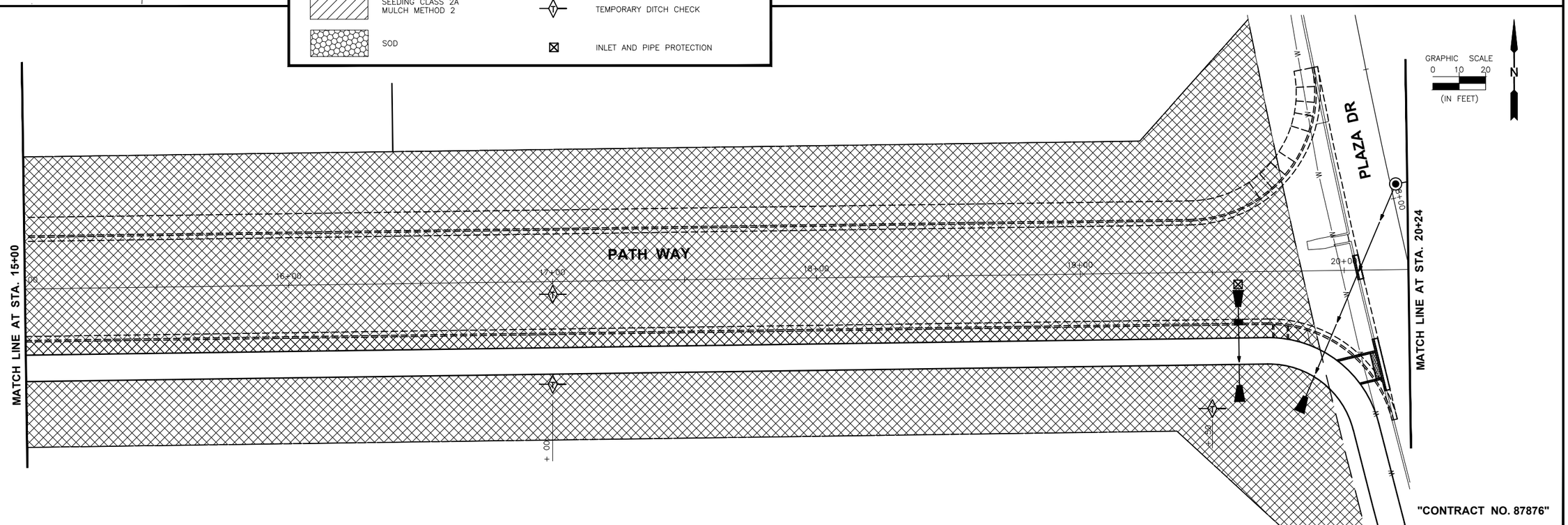

"CONTRACT NO. 87876"

DRAWN BY: FDAP	REVISIONS			
CHECKED BY: JKC	LEVEL	BY	DATE	DESCRIPTION
DATE: 08/2023				

Chamlin & Associates

PERU MORRIS
OTTAWA MENDOTA
ILLINOIS

PERU ITEP SHARED USE PATH PROJECT
SECTION 23-00073-00-BT
LASALLE COUNTY

EROSION CONTROL PLAN
PATH WAY STA. 10+00 TO STA. 20+24

CONSTRUCTION PLANS

CURRENT AS OF: 12/20/2024	
SCALE: AS NOTED	SHEET 46
FILE NO.: 66437.00 Y–	OF 183

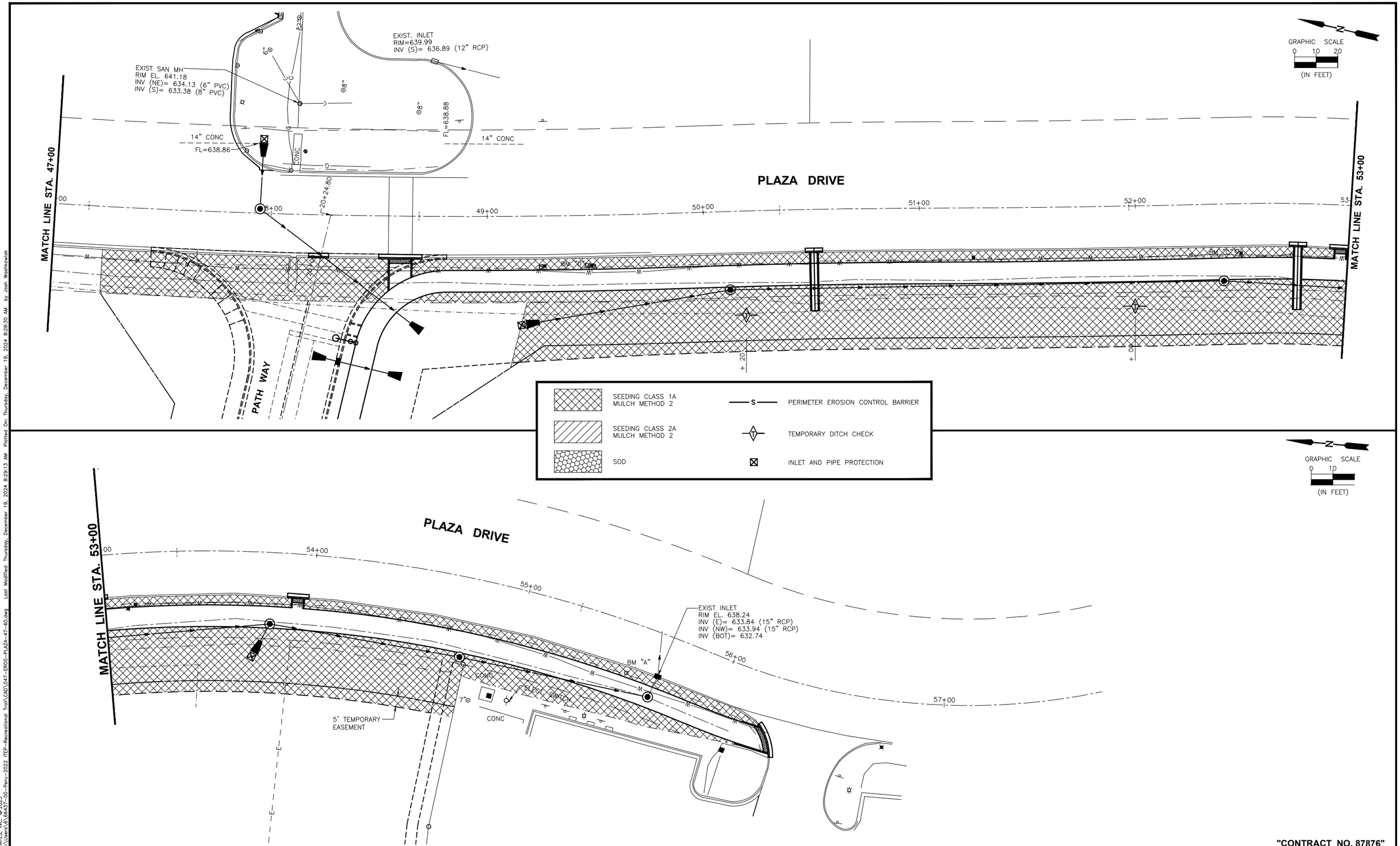

"CONTRACT NO. 87876"

CHAMLIN & ASSOCIATES, INC. © 2023
Drawing Name: G:\Users\0\66437-00-Peru-2022 ITEP-Recreational Trail\CAD\047-EROS-PlaZA-47-60.dwg Last Modified: Thursday, December 19, 2024 8:29:13 AM Plotted On: Thursday, December 19, 2024 8:29:30 AM by: Josh Washkowiak

DRAWN BY: DS	REVISIONS				
CHECKED BY: JKC	LEVEL	BY	DATE	DESCRIPTION	
DATE: 08/2023					

Chamlin & Associates

PERU MORRIS
OTTAWA MENDOTA
ILLINOIS

PERU ITEP SHARED USE PATH PROJECT
SECTION 23-00073-00-BT
LASALLE COUNTY

EROSION CONTROL PLAN
PLAZA DRIVE STA. 47+00 TO STA. 57+00

CONSTRUCTION PLANS

CURRENT AS OF: 12/20/2024			
SCALE: AS NOTED	SHEET	47	
FILE NO.: 66437.00 Y-	OF	183	

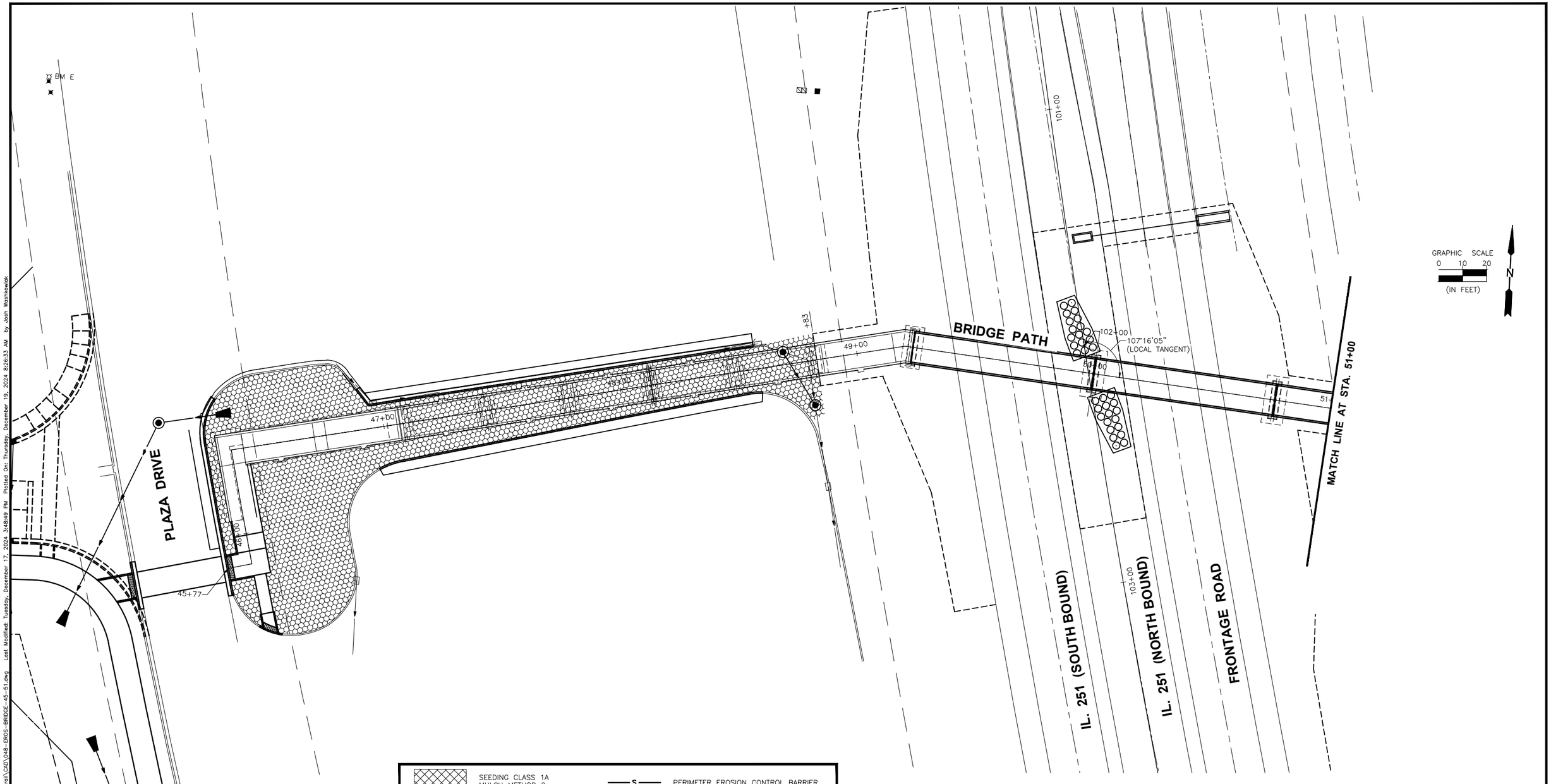

SEEDING CLASS 1A MULCH METHOD 2	PERIMETER EROSION CONTROL BARRIER
SEEDING CLASS 2A MULCH METHOD 2	TEMPORARY DITCH CHECK
SOD	INLET AND PIPE PROTECTION

"CONTRACT NO. 87876"

DRAWN BY: LMP
CHECKED BY: JKC
DATE: 06/2023

REVISIONS

LEVEL	BY	DATE	DESCRIPTION

Chamlin & Associates

PERU MORRIS
OTTAWA MENDOTA
ILLINOIS

PERU ITEP SHARED USE PATH PROJECT
SECTION 23-00073-00-BT
LASALLE COUNTY

EROSION CONTROL PLAN
BRIDGE PATH STA. 45+00 TO STA. 51+00

CONSTRUCTION PLANS

CURRENT AS OF: 12/20/2024
SCALE: AS NOTED
SHEET 48 OF 183
FILE NO.: 66437.00 Y-

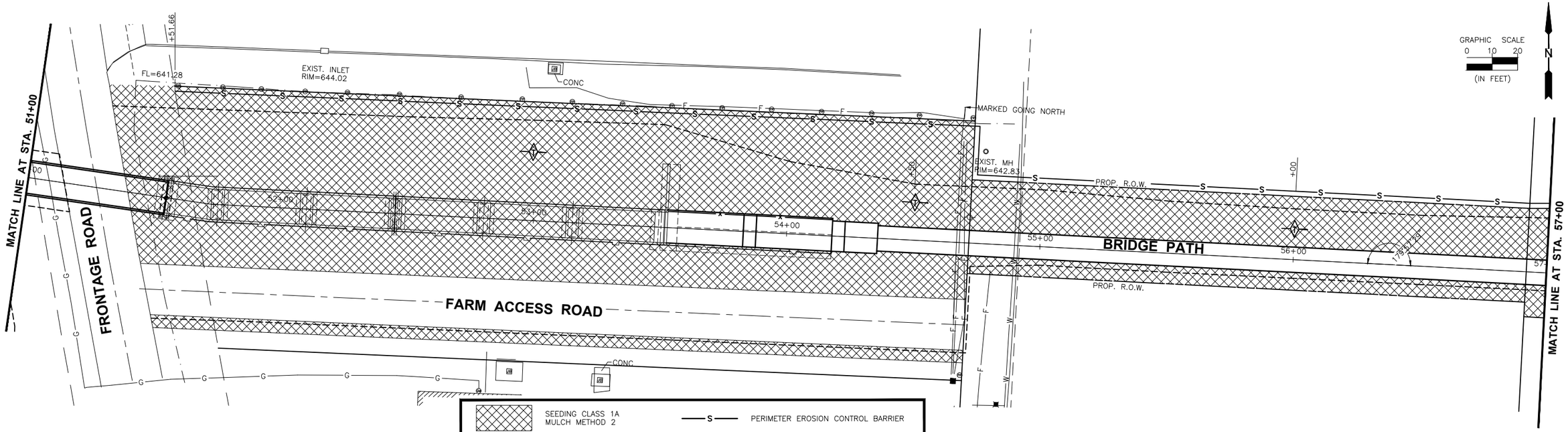

SEEDING CLASS 1A
MULCH METHOD 2

SEEDING CLASS 2A
MULCH METHOD 2

SOD

PERIMETER EROSION CONTROL BARRIER

TEMPORARY DITCH CHECK

INLET AND PIPE PROTECTION

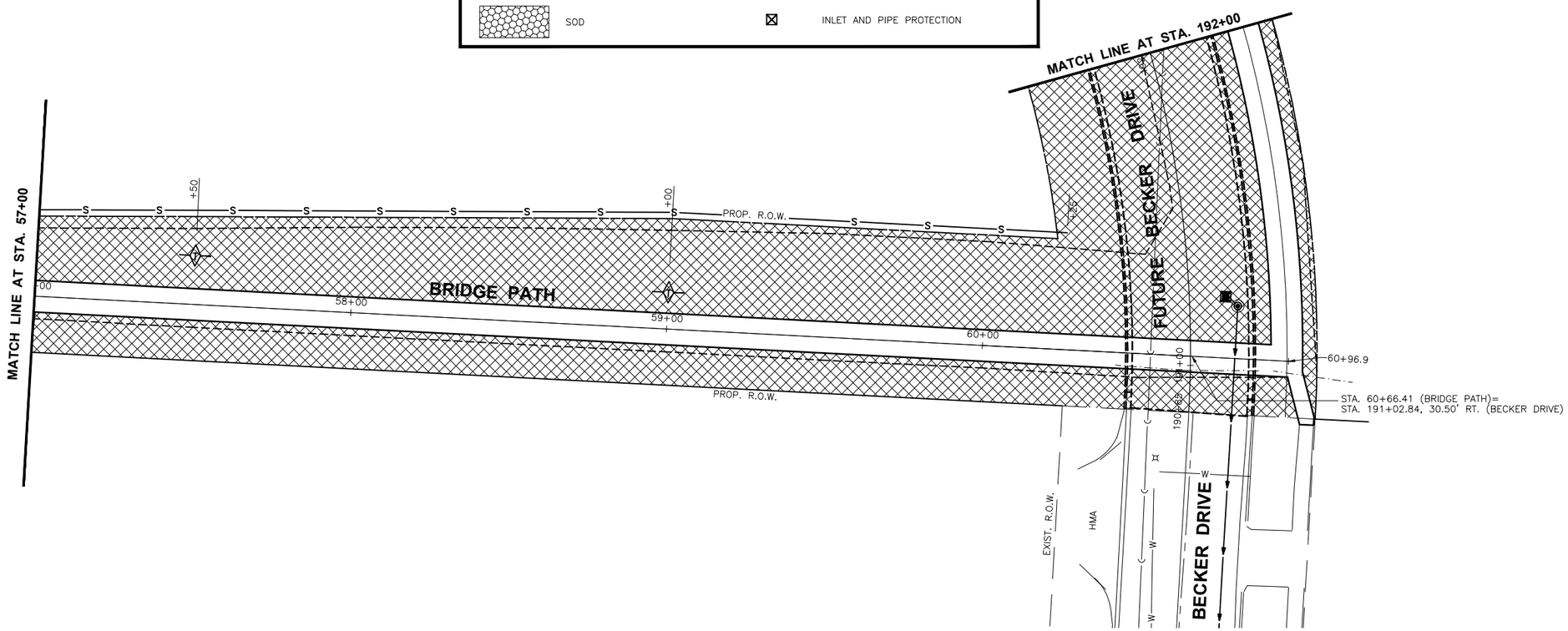

"CONTRACT NO. 87876"

DRAWN BY: FDAP	REVISIONS			
CHECKED BY: JKC	LEVEL	BY	DATE	DESCRIPTION
DATE: 08/2023				

Chamlin & Associates

PERU MORRIS
OTTAWA MENDOTA
ILLINOIS

PERU ITEP SHARED USE PATH PROJECT
SECTION 23-00073-00-BT
LASALLE COUNTY

EROSION CONTROL PLAN
BRIDGE PATH STA. 51+00 TO STA. 61+00

CONSTRUCTION PLANS

CURRENT AS OF: 12/20/2024		
SCALE: AS NOTED	SHEET 49	
FILE NO.: 66437.00 Y-	OF 183	

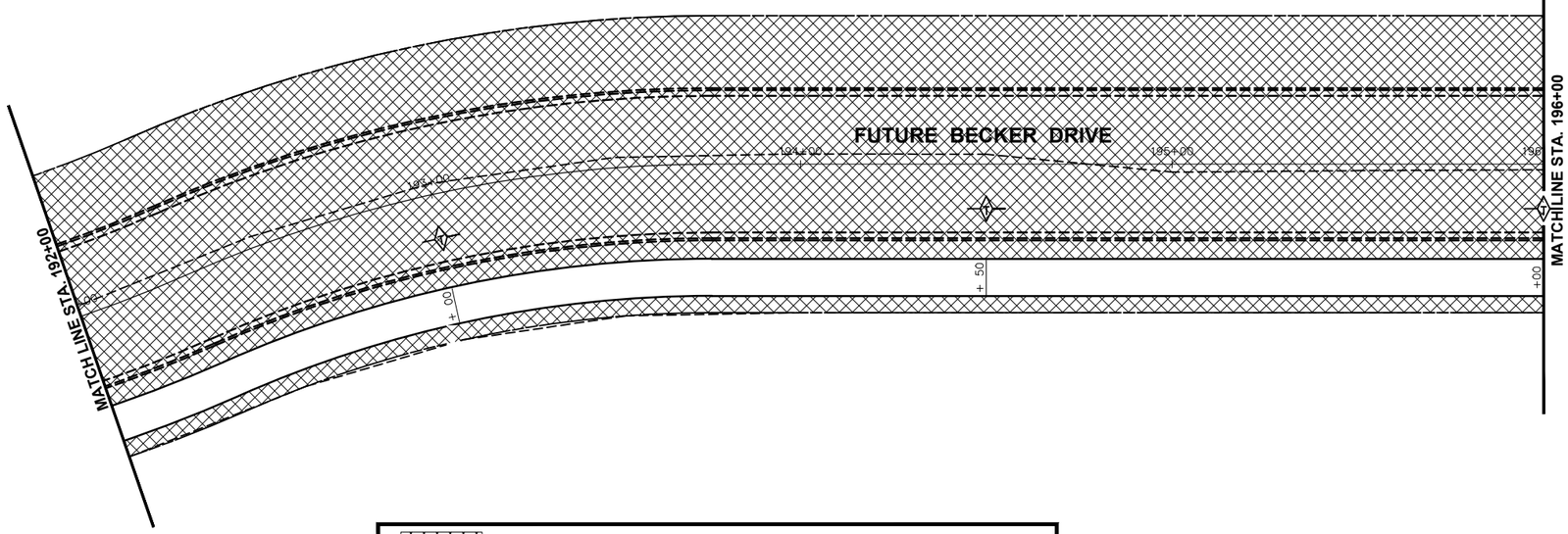

GRAPHIC SCALE
0 10 20
(IN FEET)

SEEDING CLASS 1A MULCH METHOD 2	—S—	PERIMETER EROSION CONTROL BARRIER
SEEDING CLASS 2A MULCH METHOD 2		TEMPORARY DITCH CHECK
SOD		INLET AND PIPE PROTECTION

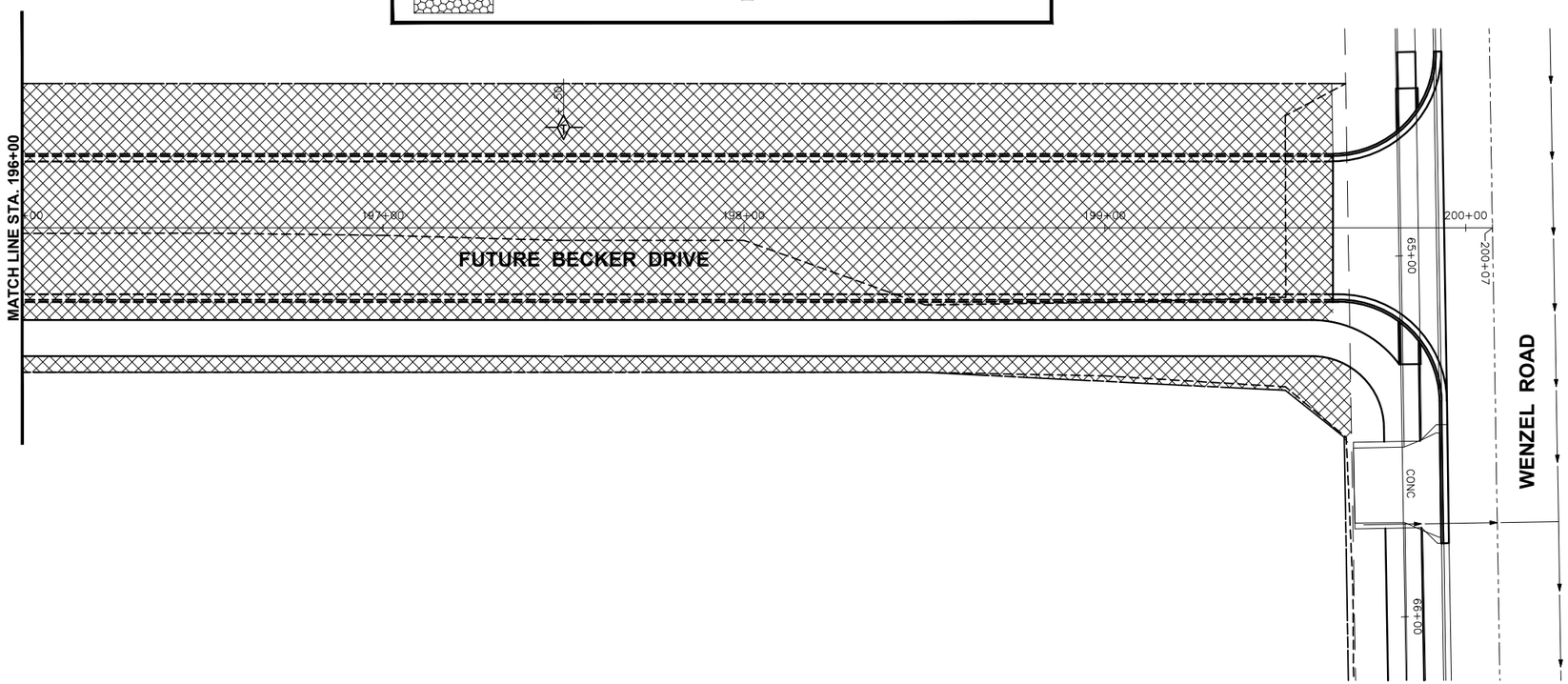

GRAPHIC SCALE
0 10 20
(IN FEET)

"CONTRACT NO. 87876"

DRAWN BY: FDAP	REVISIONS		
CHECKED BY: JKC	LEVEL / BY / DATE / DESCRIPTION		
DATE: 08/2023			

Chamlin & Associates

PERU MORRIS
OTTAWA MENDOTA
ILLINOIS

PERU ITEP SHARED USE PATH PROJECT
SECTION 23-00073-00-BT
LASALLE COUNTY

EROSION CONTROL PLAN
FUTURE BECKER DRIVE

CONSTRUCTION PLANS

CURRENT AS OF: 12/20/2024		
SCALE: AS NOTED	SHEET 50	
FILE NO.: 66437.00 Y-	OF 183	

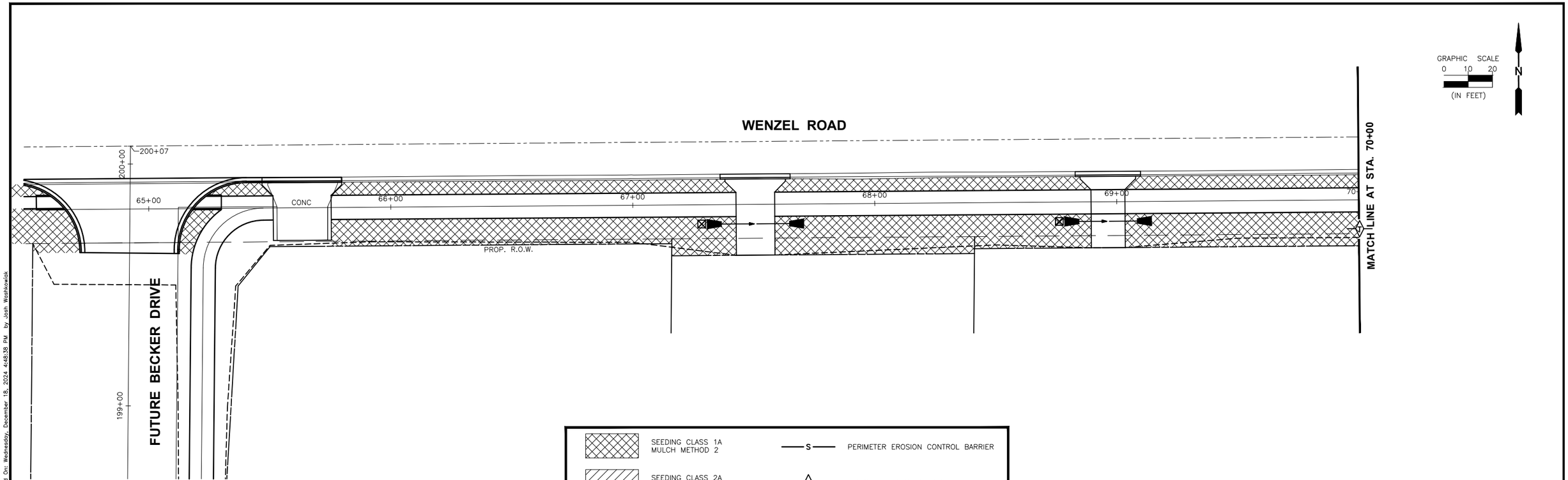

SEEDING CLASS 1A MULCH METHOD 2	PERIMETER EROSION CONTROL BARRIER
SEEDING CLASS 2A MULCH METHOD 2	TEMPORARY DITCH CHECK
SOD	INLET AND PIPE PROTECTION

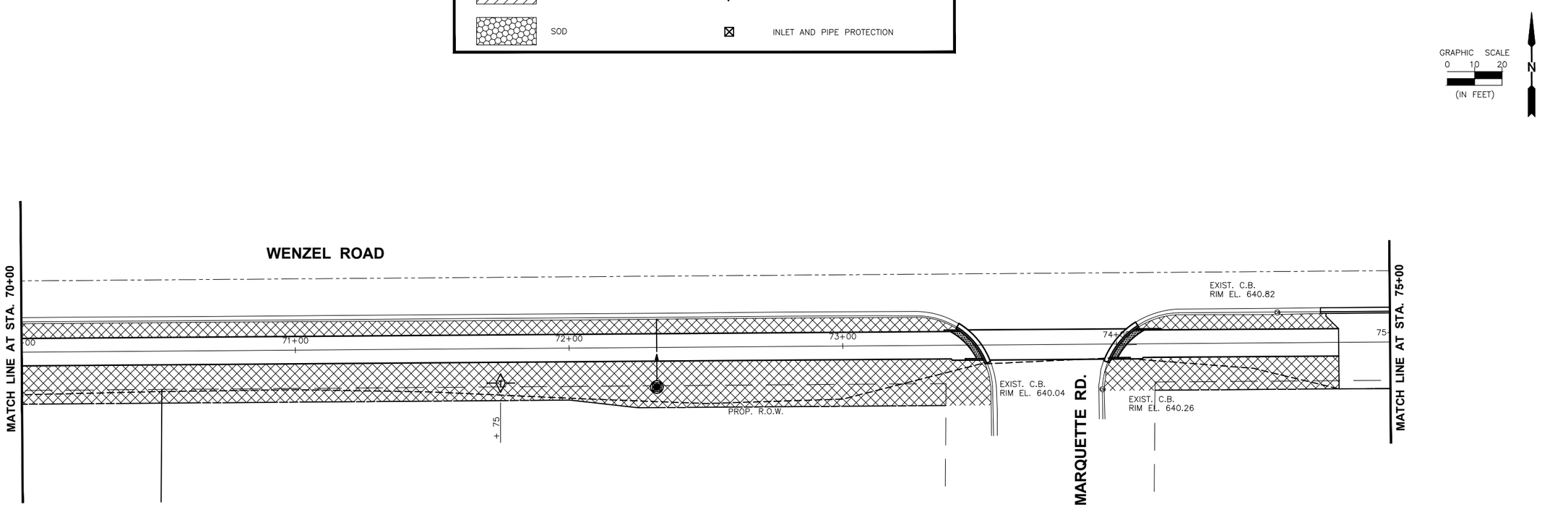

"CONTRACT NO. 87876"

DRAWN BY: DS	REVISIONS				CURRENT AS OF: 12/20/2024	
CHECKED BY: JKC	LEVEL / BY / DATE / DESCRIPTION				SCALE: AS NOTED	SHEET 51
DATE: 08/2023					FILE NO.: 66437.00 Y-	OF 183

Chamlin & Associates

PERU MORRIS
OTTAWA MENDOTA
ILLINOIS

PERU ITEP SHARED USE PATH PROJECT
SECTION 23-00073-00-BT
LASALLE COUNTY

EROSION CONTROL PLAN
WENZEL ROAD
STA. 65+00 TO STA. 75+00

CONSTRUCTION PLANS

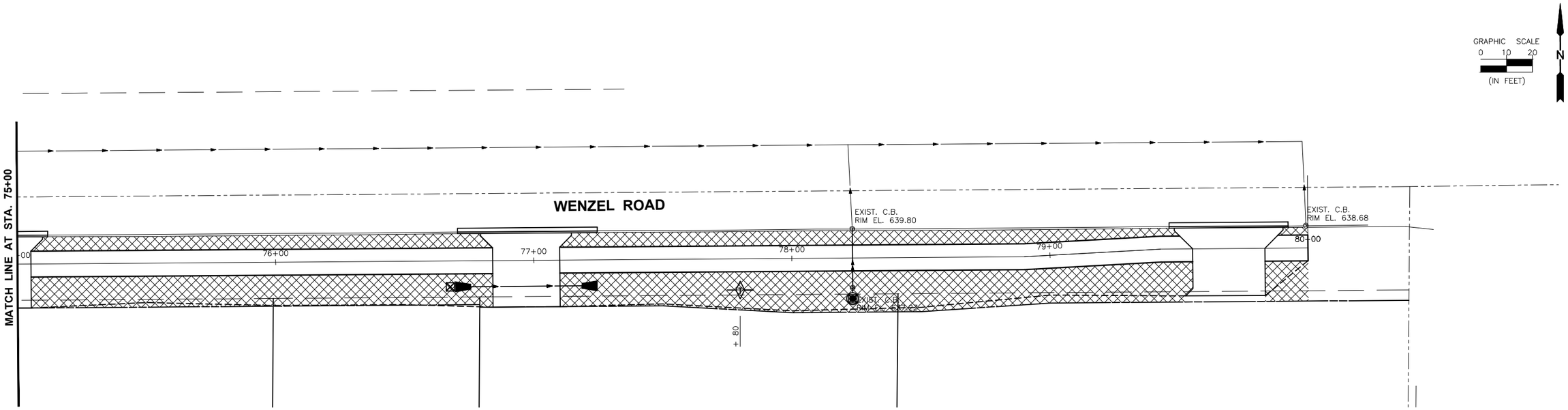

SEEDING CLASS 1A MULCH METHOD 2		S	PERIMETER EROSION CONTROL BARRIER
SEEDING CLASS 2A MULCH METHOD 2		T	TEMPORARY DITCH CHECK
SOD			INLET AND PIPE PROTECTION

"CONTRACT NO. 87876"

DRAWN BY: DS
CHECKED BY: JKC
DATE: 08/2023

REVISIONS

LEVEL	BY	DATE	DESCRIPTION

Chamlin & Associates

PERU MORRIS
OTTAWA MENDOTA
ILLINOIS

PERU ITEP SHARED USE PATH PROJECT
SECTION 23-00073-00-BT
LASALLE COUNTY

EROSION CONTROL PLAN
WENZEL ROAD
STA. 75+00 TO STA. 81+00

CONSTRUCTION PLANS

CURRENT AS OF: 12/20/2024
SCALE: AS NOTED
SHEET 52
FILE NO.: 66437.00 Y-
OF 183

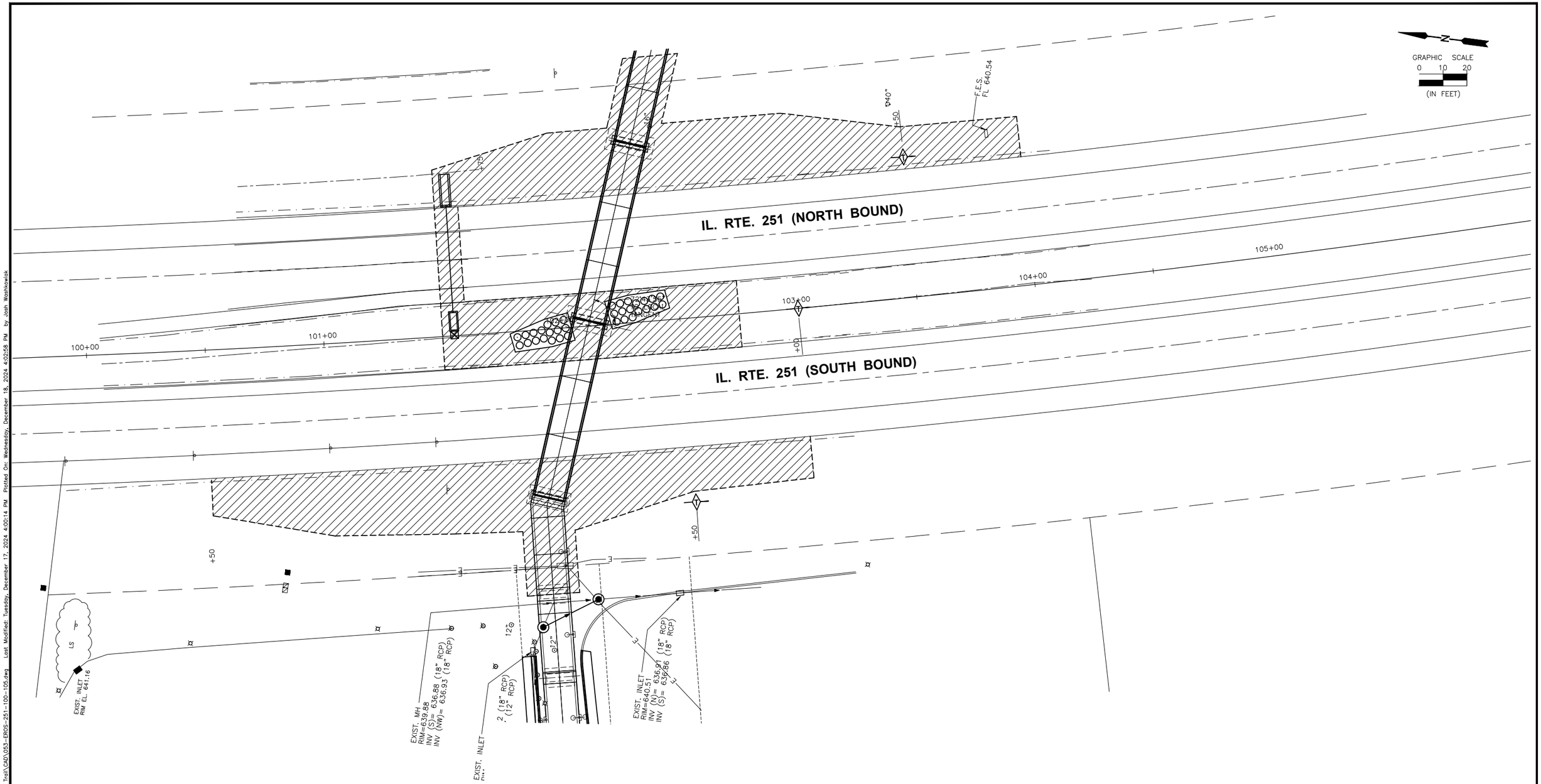

SEEDING CLASS 1A MULCH METHOD 2	PERIMETER EROSION CONTROL BARRIER
SEEDING CLASS 2A MULCH METHOD 2	TEMPORARY DITCH CHECK
SOD	INLET AND PIPE PROTECTION

"CONTRACT NO. 87876"

CHAMLIN & ASSOCIATES, INC. ©2023
Drawing Name: Q:\Users\66437-00-Peru-2022 ITEP-Recreational Trail\CAD\053-EROS-251-100-105.dwg Last Modified: Tuesday, December 17, 2024 4:00:14 PM Plotted On: Wednesday, December 18, 2024 4:02:58 PM by: Josh Washkowiak

DRAWN BY: DS
CHECKED BY: JKC
DATE: 07/2023

REVISIONS

LEVEL	BY	DATE	DESCRIPTION

Chamlin & Associates

PERU MORRIS
OTTAWA MENDOTA
ILLINOIS

PERU ITEP SHARED USE PATH PROJECT
SECTION 23-00073-00-BT
LASALLE COUNTY

EROSION CONTROL PLAN
IL. RTE. 251 STA. 100+00 TO STA. 105+00

CONSTRUCTION PLANS

CURRENT AS OF: 12/20/2024
SCALE: AS NOTED
SHEET 53 OF 183
FILE NO.: 66437.00 Y-

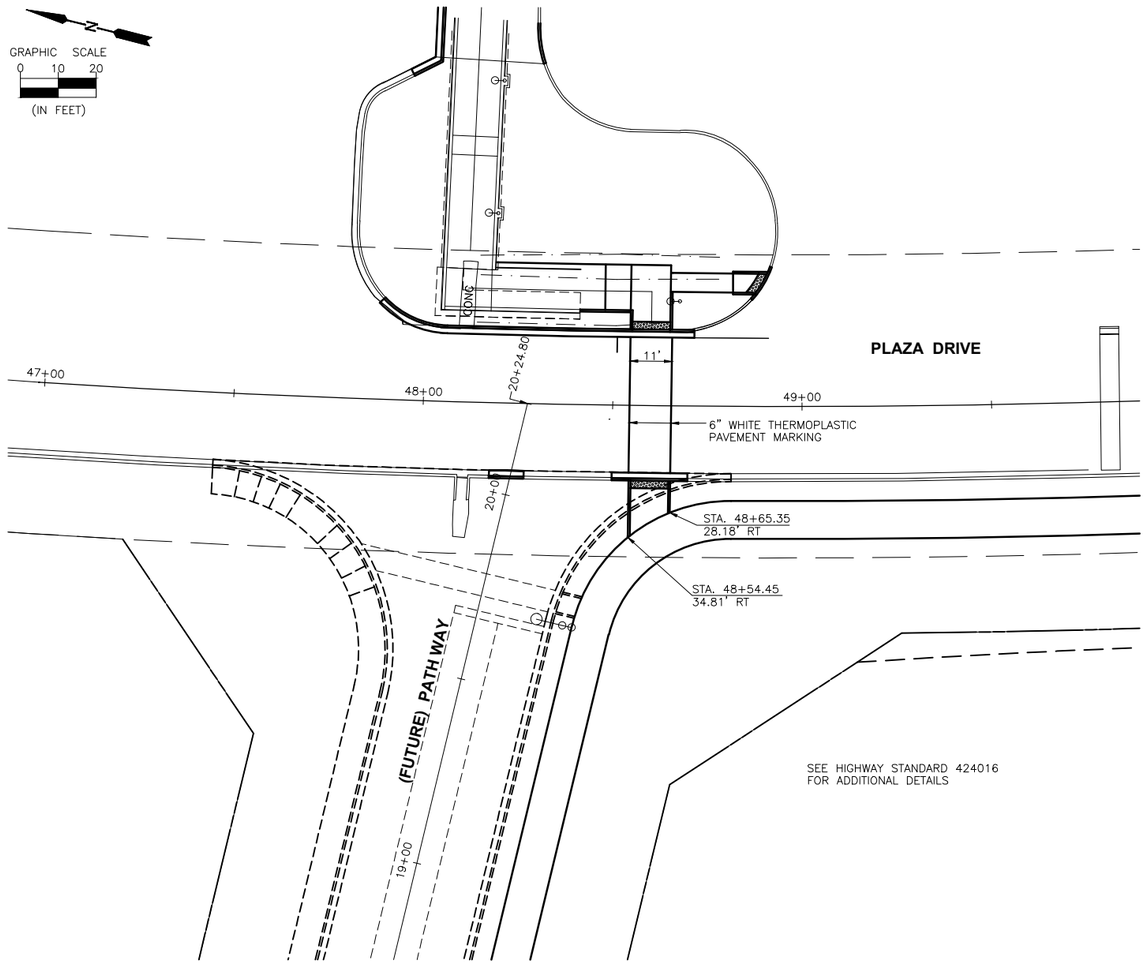

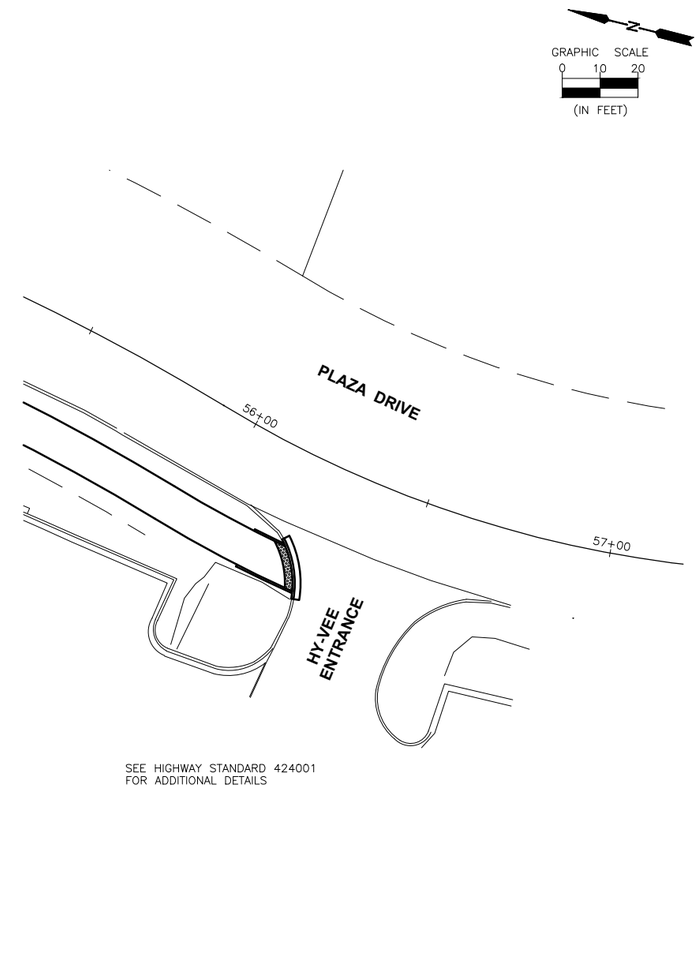

"CONTRACT NO. 87876"

DRAWN BY: DS	REVISIONS			
CHECKED BY: JKC	LEVEL	BY	DATE	DESCRIPTION
DATE: 11/2023				

Chamlin & Associates

PERU MORRIS
OTTAWA MENDOTA
ILLINOIS

PERU ITEP SHARED USE PATH PROJECT
SECTION 23-00073-00-BT
LASALLE COUNTY

INTERSECTION DETAILS
PLAZA DR. AND (FUTURE) PATH WAY
PLAZA DR. AND HY-VEE ENTRANCE

CONSTRUCTION PLANS

CURRENT AS OF: 12/20/2024	
SCALE: AS NOTED	SHEET 54
FILE NO.: 664437.00 Y–	OF 183

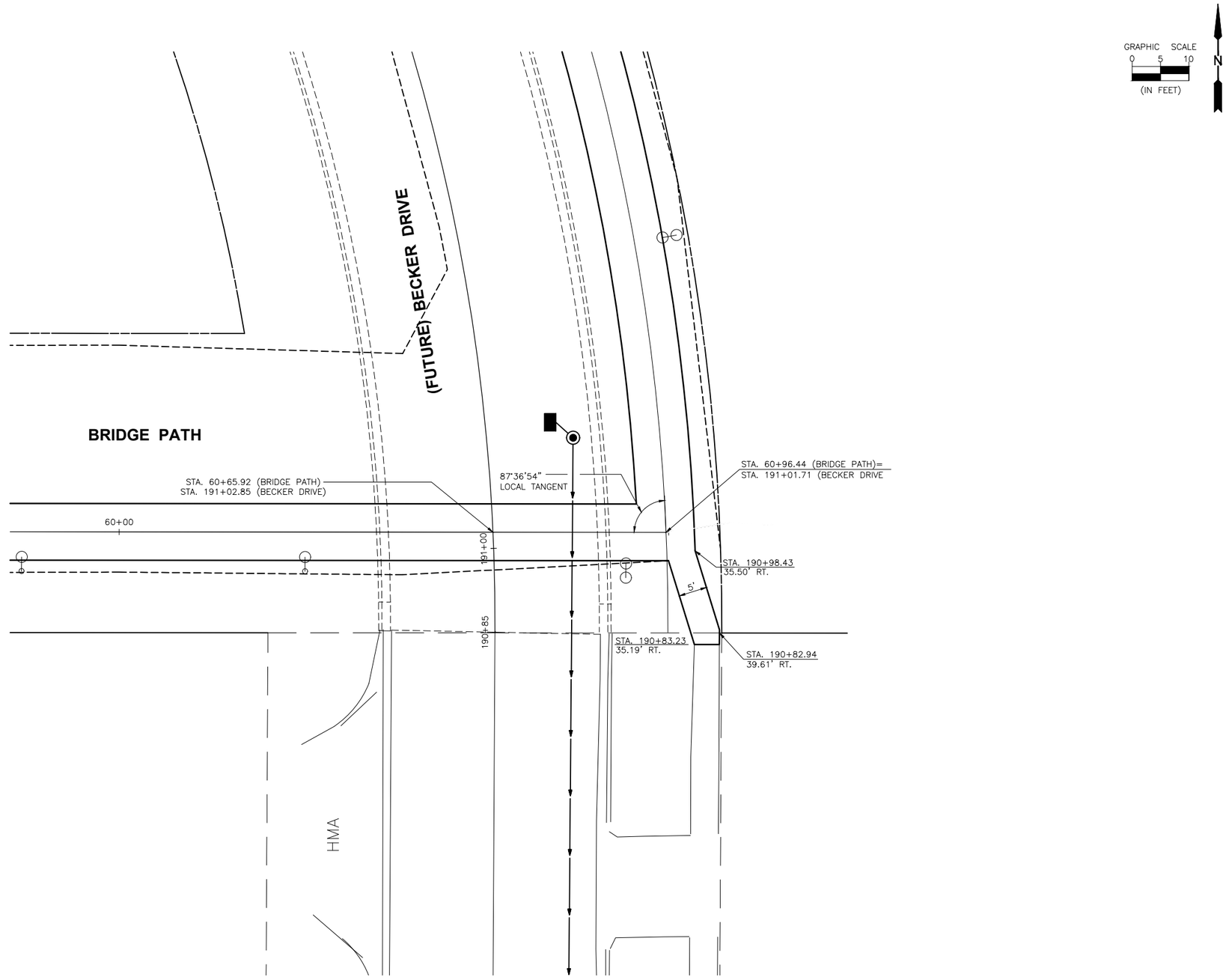

"CONTRACT NO. 87876"

DRAWN BY: DS	REVISIONS				
CHECKED BY: JKC	LEVEL	BY	DATE	DESCRIPTION	
DATE: 11/2023					

Chamlin & Associates

PERU MORRIS
OTTAWA MENDOTA
ILLINOIS

PERU ITEP SHARED USE PATH PROJECT
SECTION 23-00073-00-BT
LASALLE COUNTY

INTERSECTION DETAIL

CONSTRUCTION PLANS

CURRENT AS OF: 12/20/2024	
SCALE: AS NOTED	SHEET 55
FILE NO.: 664437.00 Y-	OF 183

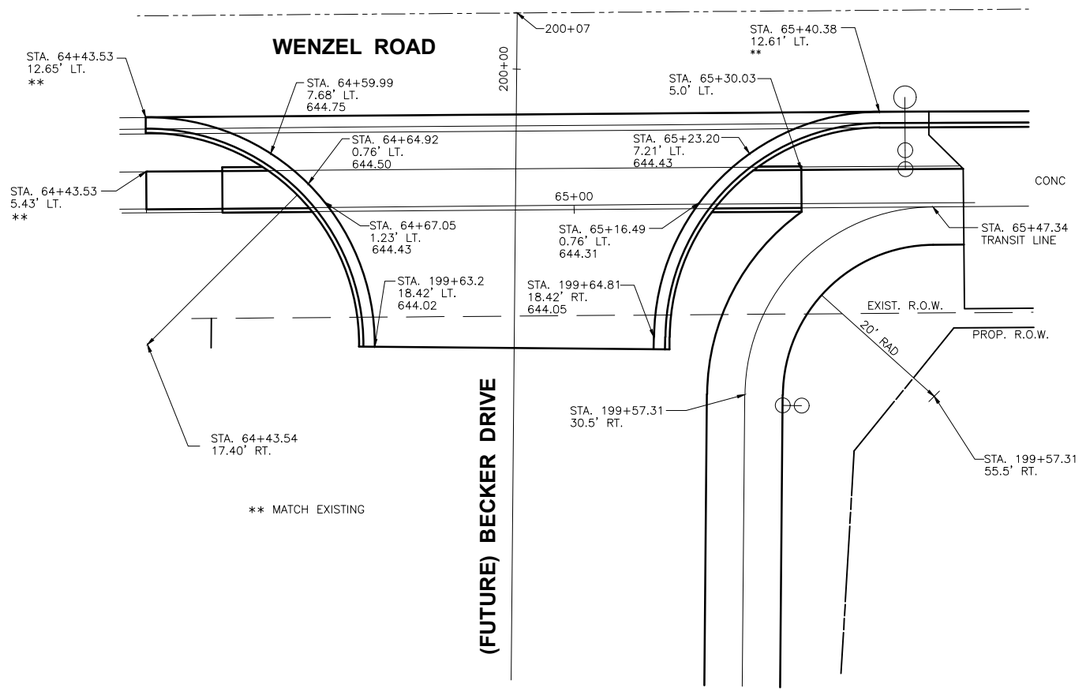

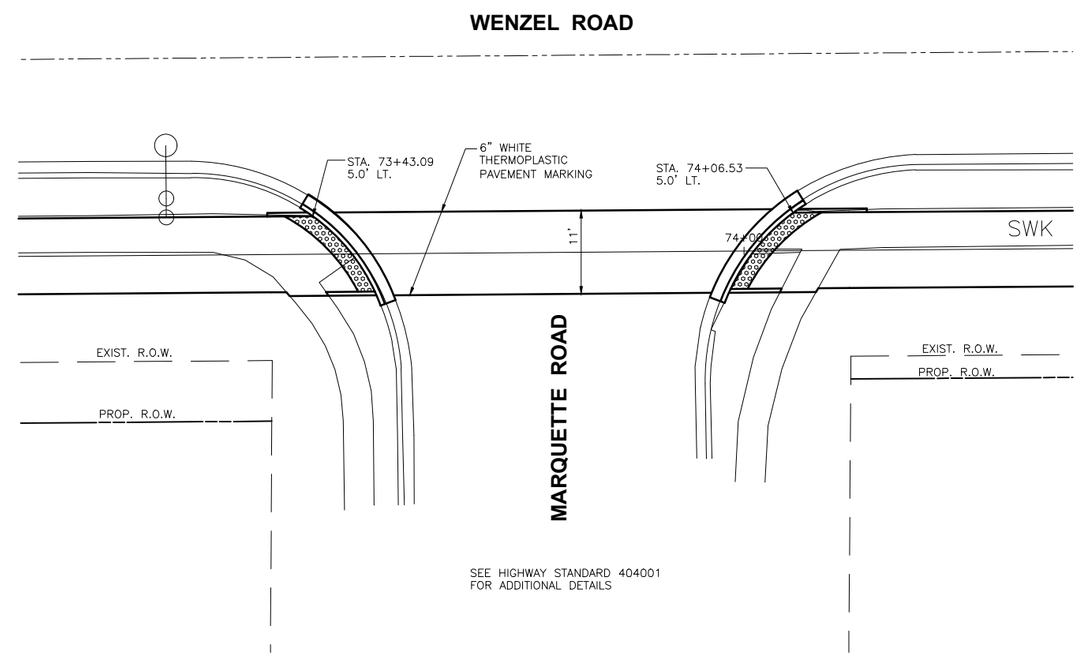

GRAPHIC SCALE
0 5 10
(IN FEET)

N

"CONTRACT NO. 87876"

DRAWN BY: FDAP	REVISIONS			
CHECKED BY: JKC	LEVEL	BY	DATE	DESCRIPTION
DATE: 08/2023				

Chamlin & Associates

PERU MORRIS
OTTAWA MENDOTA
ILLINOIS

PERU ITEP SHARED USE PATH PROJECT
SECTION 23-00073-00-BT
LASALLE COUNTY

INTERSECTION DETAILS
WENZEL RD. AND (FUTURE BECKER DR.)
WENZEL RD. AND MARQUETTE RD.

CONSTRUCTION PLANS

CURRENT AS OF: 12/20/2024			
SCALE: AS NOTED	SHEET	56	
FILE NO.: 66437.00 Y-	OF	183	

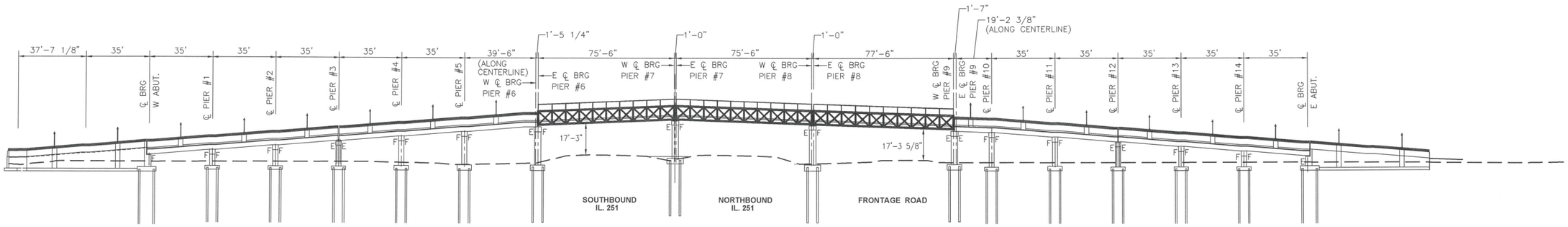

ELEVATION VIEW

BENCHMARKS

BM "D" CHISELED "X" ON EAST BOLT OF FIRE HYDRANT WEST SIDE OF PLAZA DR. SOUTH OF NORTH ENTRANCE TO PIZZA HUT ELEV.= 642.62

BM "E" CHISELED "X" ON EAST BOLT OF FIRE HYDRANT WEST SIDE OF PLAZA DR. AT NORTH END OF PLAZA DR. ELEV. = 643.87

BM 52 CHISELED "X" ON CONCRETE BASE OF BARD OPTICAL SIGN FACING NORTH ELEV.= 644.79

CURVE 7 (BRIDGE PATH)
DELTA=0°55'19"
R=3009.92'
T=24.21'
L=48.43'
CHORD
N 13°12'57" W
48.43'
P.C. STA. 45+87.04
P.I. STA. 46+11.25
P.T. STA. 46+35.47

CURVE 6 (IL 251)
DELTA=26°59'59"
R=5729.65'
T=1375.55'
L=2700.00'
CHORD
S 13°42'33" E
2675.09'
P.C. STA. 90+41.40
P.I. STA. 104+16.95
P.T. STA. 117+41.4

LOADING
Uniform Lane Loading = 90 psf
Vehicle Load = H-10 Load

DESIGN SPECIFICATIONS
LRFD Guide Specifications for Design of Pedestrian Bridges, 2nd Edition 2015

DESIGN STRESSES
FIELD UNITS
f'c = 4,000 psi (Superstructure)
f'c = 3,500 psi (Substructure)
fy = 60,000 psi (Reinforcement)
fy = 50,000 psi (M270 Grade 50W)

SEISMIC DATA
Seismic Performance Zone (SPZ) = 1
Design Spectral Acceleration at 1.0 sec. (SD1) = 0.074
Design Spectral Acceleration at 0.2 sec. (SDS) = 0.12
Soil Site Class = C

APPROVED
For Structural Adequacy Only
Engineer of Bridges & Structures

SEE SHEET 2 OF 76 FOR BRIDGE INDEX

1/24/25
date

JAMES K. CLINARD
LICENSED STRUCTURAL ENGINEER NO. 081-004655
STATE OF ILLINOIS
expires 11-30-2026
signature
PROFESSIONAL DESIGN FIRM LICENSE NO. 184-001717

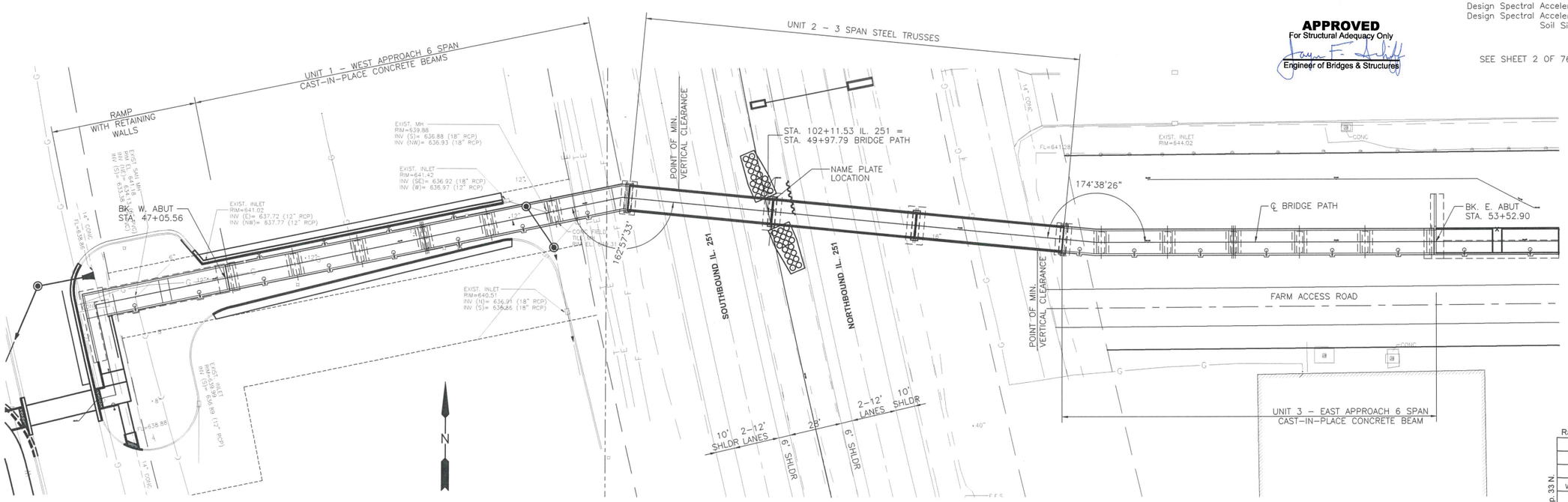

PLAN

I certify that to the best of knowledge, information and belief, this bridge design is structurally adequate for the design loading shown on the plans. The design is an economical one for the style of structure and complies with requirements of the current "AASHTO LRFD Bridge Design Specifications".

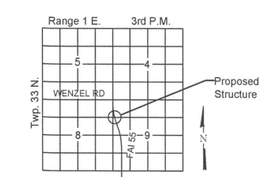

LOCATION SKETCH

SHEET 1 OF 76 BRIDGE SHEETS **"CONTRACT NO. 87876"**

DRAWN BY: NV	REVISIONS				PERU MORRIS OTTAWA MENDOTA ILLINOIS	PERU ITEP SHARED USE PATH PROJECT SECTION 23-00073-00-BT LASALLE COUNTY	GENERAL PLAN - OVERALL SN 050-7500	CONSTRUCTION PLANS	CURRENT AS OF: 12/20/2024	
CHECKED BY: JKC	LEVEL	BY	DATE	DESCRIPTION					SCALE: AS NOTED	SHEET 57
DATE: 7/2023									FILE NO.: 66437.00 Y-	OF 183

Chamlin & Associates

BRIDGE PROFILE			
STATION	ELEVATION	GRADE	
45+77.04	640.72		
		1.60%	
45+87.04	640.88		
		0.33%	
45+99.31	640.92		
		7.89%	
46+29.36	643.29		
		0.49%	
46+35.47	643.32		
		0.98%	
46+40.56	643.37		
		8.33%	
46+70.56	645.87		
		2.00%	
46+75.56	645.97		
		8.33%	
47+05.56	648.47		
		2.00%	
47+10.56	648.57		
		8.33%	
47+40.56	651.07		
		2.00%	
47+45.56	651.17		
		8.33%	
47+75.56	653.67		
		2.00%	
47+80.56	653.77		
		8.33%	
48+10.56	656.27		
		2.00%	
48+15.56	656.37		
		8.33%	
48+45.56	658.87		
		2.00%	
48+50.56	658.97		
		8.33%	
48+80.56	661.47		
		2.00%	
48+85.56	661.57		
		8.33%	
49+15.56	664.07		
		1.42%	
49+24.00	664.19		
		4.00%	
50+00.00	667.23		
		-3.40%	
51+72.90	661.35		
		-2.00%	
51+77.90	661.25		
		-8.33%	
52+07.90	658.75		
		-2.00%	
52+12.90	658.65		
		-8.33%	
52+42.90	656.15		
		-2.00%	
52+47.90	656.05		
		-8.33%	
52+77.90	653.55		
		-2.00%	
52+82.90	653.45		
		-8.33%	
53+12.90	650.95		
		-2.00%	
53+17.90	650.85		
		-8.33%	
53+47.90	648.35		
		-2.00%	
53+52.90	648.25		
		-8.33%	
53+82.90	645.75		
		-2.00%	
53+87.90	645.65		
		-8.33%	
54+17.90	643.15		
		-2.00%	
54+22.90	643.05		
		-3.17%	
54+52.90	642.10		

INDEX OF SHEETS

STA. 102+11.53
BUILT 20__ BY
STATE OF ILLINOIS
FAP 46 Sec. 23-00073-00-BT
LOADING H-10/90 PSF
STR. NO.050-7500

NAME PLATE
See Std. 515001

TOTAL BILL OF MATERIALS

ITEM	UNIT	SUPER	SUB	RETAINING WALL	TOTAL
STRUCTURE EXCAVATION	CU YD	---	584	467	1050
CONCRETE STRUCTURES	CU YD	---	519.1	---	519.1
RUBBED FINISH	SQ FT	6186	6492	2956	15634
CONCRETE SUPERSTRUCTURE	CU YD	375.4	---	---	375.4
PROTECTIVE COAT	SQ YD	865	---	---	865
REINFORCEMENT BARS	POUND	---	2200	7570	9770
REINFORCEMENT BARS, EPOXY COATED	POUND	72740	32350	16110	121200
PEDESTRIAN RAILING	FOOT	816	---	240	1056
PARAPET RAILING	FOOT	784	---	236	1020
FURNISHING STEEL PILES HP10X42	FOOT	---	1496	---	1496
DRIVING PILES	FOOT	---	1496	---	1496
TEST PILE STEEL HP10X42	EACH	---	9	---	9
PILE SHOES	EACH	---	72	---	72
NAME PLATES	EACH	---	1	---	1
ELASTOMERIC BEARING ASSEMBLY, TYPE I	EACH	---	16	---	16
ANCHOR BOLTS, 3/4"	EACH	---	32	---	32
TEMPORARY SHEET PILING	SQ FT	---	107	---	107
CONCRETE STRUCTURES (RETAINING WALL)	CU YD	---	---	213.1	213.1
GRANULAR BACKFILL FOR STRUCTURES	CU YD	---	33	321	354
CONCRETE SEALER	SQ YD	---	3412	---	3412
GEOCOMPOSITE WALL DRAIN	SQ YD	---	19	121	140
PIPE UNDERDRAINS FOR STRUCTURES 4"	FOOT	---	24	275	299
CONDUIT EMBEDDED IN STRUCTURE, 2" DIA., PVC	FOOT	144	---	79	223
PEDESTRIAN TRUSS SUPERSTRUCTURE	SQ FT	2766	---	---	2766
DRAINAGE SCUPPERS, DS-11	EACH	4	---	---	4
PREFORMED JOINT STRIP SEAL	FOOT	104	---	---	104

Bridges General Notes

Reinforcement bars designated (E) shall be epoxy coated.

The Contractor shall make allowance for the deflection of forms, shrinkage, and settlement of falsework, in addition to allowance for dead load deflection.

The structural steel plates of the Bearing Assembly shall conform to the requirements of AASHTO M270 Grade 50.

All (embedded and separate) bearing plates, side retainers, anchor bolts, nuts, washers, and pintles shall be galvanized according to AASHTO M111 or M232 as applicable.

A film forming Concrete Sealer shall be applied to the bearing seat areas of the abutments and piers 3, 6, 7, 8, 9, & 12. It shall also be applied to exposed vertical surfaces of piers 6, 7, 8, and 9.

If the Contractor chooses to alter the temporary cantilever sheet piling design requirements shown on the plans, a design submittal including plan details and calculations will be required for review and acceptance by the Engineer.

Protective coat shall only be applied to the top of deck surface between the backs of the abutments.

All CONCRETE SUPERSTRUCTURE concrete and 105.7 cubic yards of the CONCRETE STRUCUTURES (RETAINING WALL) concrete shall be colored. See Special Provisions.

DRAWN BY: LMP
CHECKED BY: JKC
DATE: 09/2023

REVISIONS			
LEVEL	BY	DATE	DESCRIPTION

Chamlin & Associates

PERU MORRIS
OTTAWA MENDOTA
ILLINOIS

PERU ITEP SHARED USE PATH PROJECT
SECTION 23-00073-00-BT
LASALLE COUNTY

GENERAL DATA
SN 050-7500

CONSTRUCTION PLANS

CURRENT AS OF: 12/20/2024
SCALE: AS NOTED
SHEET 58
FILE NO.: 66437.00 Y-
OF 183

GRAPHIC SCALE
0 1.5 3
(IN FEET)
N

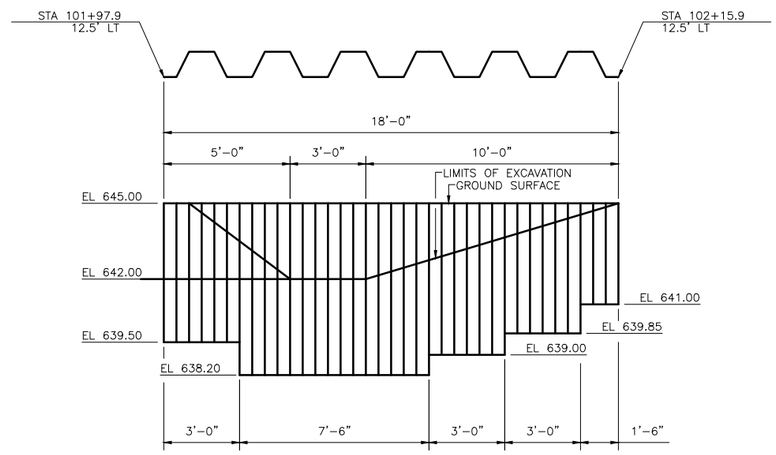

TEMPORARY SHEET PILING
EAST OF PIER 7

(LOOKING EAST)
MINIMUM SECTION MODULUS = 2.5 IN^3/FT

BILL OF MATERIAL

ITEM	UNIT	QUANTITY
TEMPORARY SHEET PILING	SQ FT	107

SHEET 3 OF 76 BRIDGE SHEETS "CONTRACT NO. 87876"

DRAWN BY: LMP	REVISIONS			
CHECKED BY: JKC	LEVEL	BY	DATE	DESCRIPTION
DATE: 01/2024				

Chamlin & Associates

PERU MORRIS
OTTAWA MENDOTA
ILLINOIS

PERU ITEP SHARED USE PATH PROJECT
SECTION 23-00073-00-BT
LASALLE COUNTY

TEMPORARY SHEET PILING
SN 050-7500

CONSTRUCTION PLANS

CURRENT AS OF: 12/20/2024
SCALE: AS NOTED
SHEET 59
FILE NO.: 66437.00 Y-
OF 183

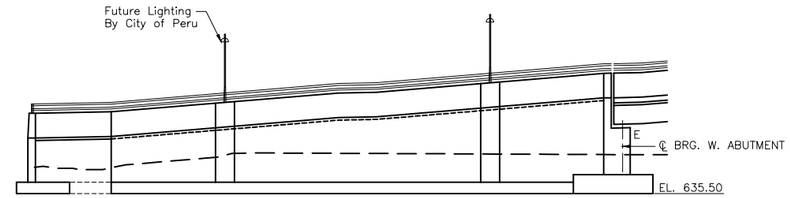

ELEVATION

BENCHMARKS

BM "D" CHISELED "X" ON EAST BOLT OF FIRE HYDRANT WEST SIDE OF PLAZA DR. SOUTH OF NORTH ENTRANCE TO PIZZA HUT ELEV.= 642.62

BM "E" CHISELED "X" ON EAST BOLT OF FIRE HYDRANT WEST SIDE OF PLAZA DR. AT NORTH END OF PLAZA DR. ELEV. = 643.87

SEE SHEETS 133 OF PATH PLANS FOR ADDITIONAL TOP OF SLAB DETAILS/ELEV. AT CORNER

CURVE 7 (BRIDGE PATH)
DELTA=0°55'19"
R=3009.92'
T=24.21'
L=48.43'
CHORD
N 13°12'57" W
48.43'
P.C. STA. 45+87.04
P.I. STA. 46+11.25
P.T. STA. 46+35.47

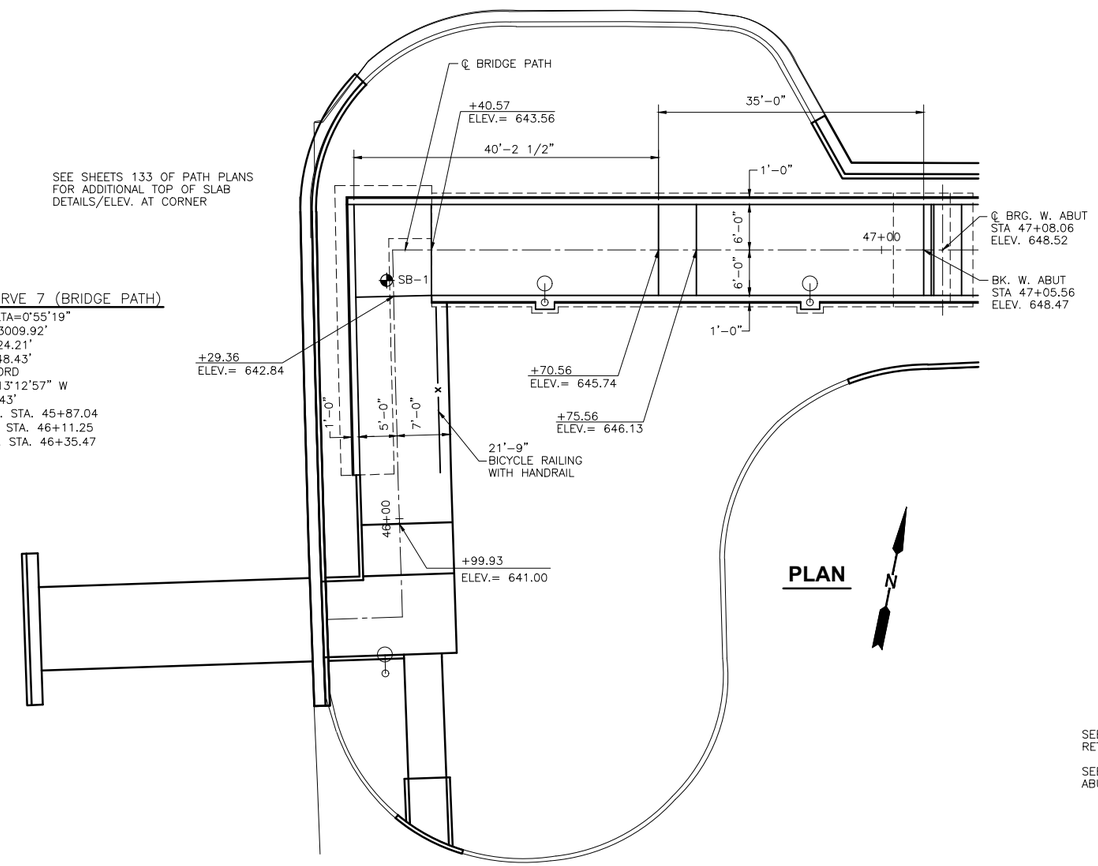

PLAN

SEE SHEETS 48–51 OF 76 FOR RETAINING WALL DETAILS

SEE SHEET 55 FOR ABUTMENT DETAILS

LOADING
Uniform Lane Loading = 90 psf
Vehicle Load = H–10 Load

DESIGN SPECIFICATIONS
LRFD Guide Specifications for Design of Pedestrian Bridges, 2nd Edition 2015

DESIGN STRESSES
FIELD UNITS

f'c = 4,000 psi (Superstructure)
f'c = 3,500 psi (Substructure)
fy = 60,000 psi (Reinforcement)

SEISMIC DATA
Seismic Performance Zone (SPZ) = 1
Design Spectral Acceleration at 1.0 sec. (SD1) = 0.074
Design Spectral Acceleration at 0.2 sec. (SDS) = 0.12
Soil Site Class = C

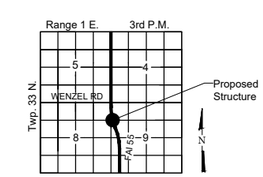

LOCATION SKETCH

SHEET 4 OF 76 BRIDGE SHEETS

"CONTRACT NO. 87876"

DRAWN BY: NV	REVISIONS			Chamlin & Associates	PERU MORRIS OTTAWA MENDOTA ILLINOIS	PERU ITEP SHARED USE PATH PROJECT SECTION 23-00073-00-BT LASALLE COUNTY	GENERAL PLAN - WEST RETAINING WALLS SN 050-7500	CONSTRUCTION PLANS	CURRENT AS OF: 12/20/2024
CHECKED BY: JKC	LEVEL	BY	DATE	DESCRIPTION					SCALE: AS NOTED / SHEET 60
DATE: 07/2023									FILE NO.: 66437.00 Y– / OF 183

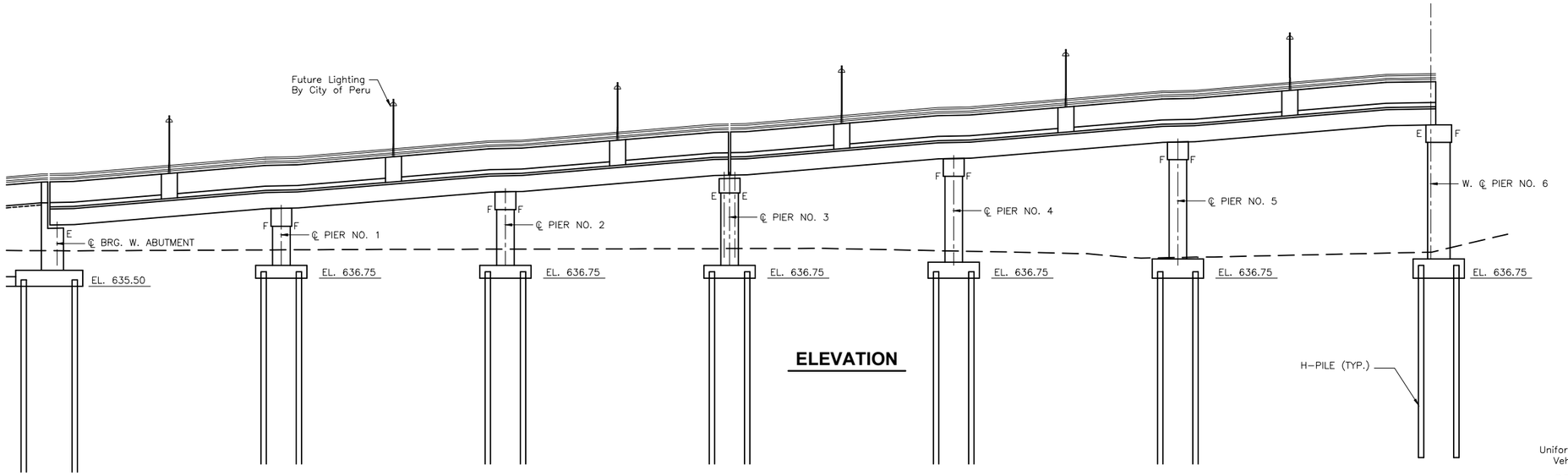

ELEVATION

BENCHMARKS

BM "D" CHISELED "X" ON EAST BOLT OF FIRE HYDRANT WEST SIDE OF PLAZA DR. SOUTH OF NORTH ENTRANCE TO PIZZA HUT
ELEV.= 642.62

BM "E" CHISELED "X" ON EAST BOLT OF FIRE HYDRANT WEST SIDE OF PLAZA DR. AT NORTH END OF PLAZA DR.
ELEV. = 643.87

LOADING
Uniform Lane Loading = 90 psf
Vehicle Load = H-10 Load

DESIGN SPECIFICATIONS
LRFD Guide Specifications for Design of Pedestrian Bridges, 2nd Edition 2015

DESIGN STRESSES
FIELD UNITS

f'c = 4,000 psi (Superstructure)
f'c = 3,500 psi (Substructure)
fy = 60,000 psi (Reinforcement)

SEISMIC DATA
Seismic Performance Zone (SPZ) = 1
Design Spectral Acceleration at 1.0 sec. (SD1) = 0.074
Design Spectral Acceleration at 0.2 sec. (SDS) = 0.12
Soil Site Class = C

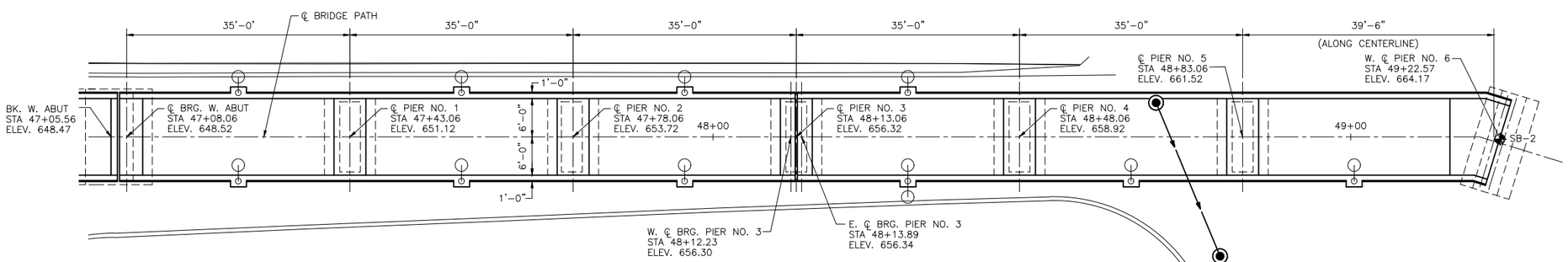

PLAN

N

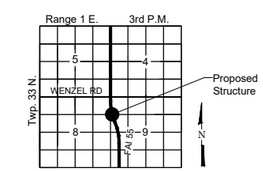

LOCATION SKETCH

SHEET 5 OF 76 BRIDGE SHEETS

"CONTRACT NO.87876"

DRAWN BY: NV	REVISIONS			
CHECKED BY: JKC	LEVEL	BY	DATE	DESCRIPTION
DATE: 7/2023				

Chamlin & Associates

PERU MORRIS
OTTAWA MENDOTA
ILLINOIS

PERU ITEP SHARED USE PATH PROJECT
SECTION 23-00073-00-BT
LASALLE COUNTY

GENERAL PLAN - UNIT 1
SN 050-7500

CONSTRUCTION PLANS

CURRENT AS OF: 12/20/2024	
SCALE: AS NOTED	SHEET 61
FILE NO.: 66437.00 Y-	OF 183

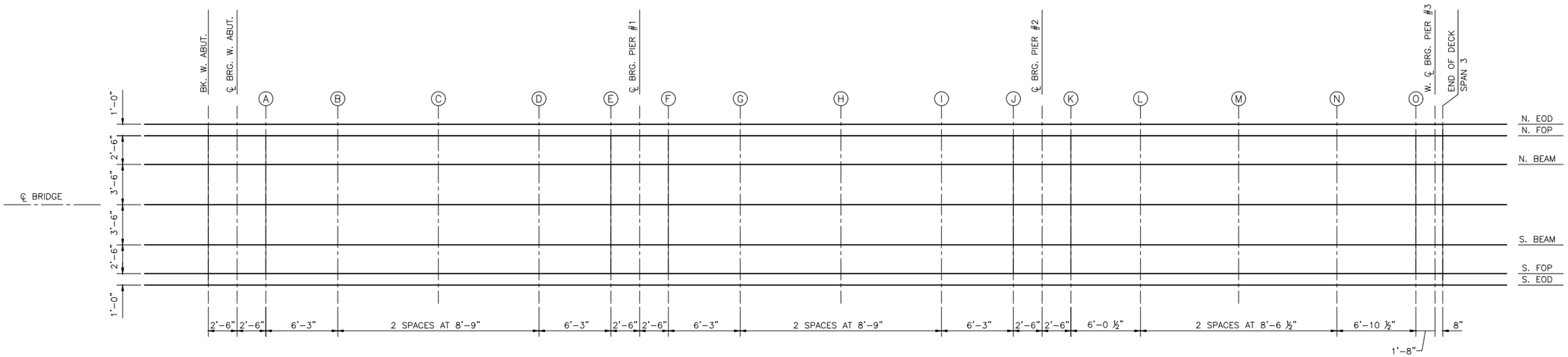

SPANS 1 - 3

EOD – EDGE OF DECK
FOP – FACE OF PARAPET

N. EOD				
Location	Station	Offset	Theoretical Grade Elevations	Theoretical Grade Elevations Adjusted for Dead Load Deflections
BK. W. ABUT	47+05.56	-7.00	648.50	648.50
CL. BRG W. ABUT	47+08.06	-7.00	648.55	648.55
A	47+10.56	-7.00	648.60	648.62
B	47+16.81	-7.00	649.12	649.17
C	47+25.56	-7.00	649.85	649.91
D	47+34.31	-7.00	650.58	650.62
E	47+40.56	-7.00	651.10	651.10
CL.BRG PIER #1	47+43.06	-7.00	651.15	651.15
F	47+45.56	-7.00	651.20	651.20
G	47+51.81	-7.00	651.72	651.72
H	47+60.56	-7.00	652.45	652.46
I	47+69.31	-7.00	653.18	653.18
J	47+75.56	-7.00	653.70	653.70
CL. BRG. PIER #2	47+78.06	-7.00	653.75	653.75
K	47+80.56	-7.00	653.80	653.81
L	47+86.60	-7.00	654.30	654.33
M	47+95.14	-7.00	655.02	655.08
N	48+03.69	-7.00	655.73	655.78
O	48+10.56	-7.00	656.30	656.31
W CL. BRG PIER #3	48+12.23	-7.00	656.33	656.33
END OF DECK SPAN 3	48+12.90	-7.00	656.35	656.35

N. FOP				
Location	Station	Offset	Theoretical Grade Elevations	Theoretical Grade Elevations Adjusted for Dead Load Deflections
BK. W. ABUT	47+05.56	-6.00	648.50	648.50
CL. BRG W. ABUT	47+08.06	-6.00	648.55	648.55
A	47+10.56	-6.00	648.60	648.62
B	47+16.81	-6.00	649.12	649.17
C	47+25.56	-6.00	649.85	649.91
D	47+34.31	-6.00	650.58	650.62
E	47+40.56	-6.00	651.10	651.10
CL.BRG PIER #1	47+43.06	-6.00	651.15	651.15
F	47+45.56	-6.00	651.20	651.20
G	47+51.81	-6.00	651.72	651.72
H	47+60.56	-6.00	652.45	652.46
I	47+69.31	-6.00	653.18	653.18
J	47+75.56	-6.00	653.70	653.70
CL. BRG. PIER #2	47+78.06	-6.00	653.75	653.75
K	47+80.56	-6.00	653.80	653.81
L	47+86.60	-6.00	654.30	654.33
M	47+95.14	-6.00	655.02	655.08
N	48+03.69	-6.00	655.73	655.78
O	48+10.56	-6.00	656.30	656.31
W CL. BRG PIER #3	48+12.23	-6.00	656.33	656.33
END OF DECK SPAN 3	48+12.90	-6.00	656.35	656.35

N. BEAM				
Location	Station	Offset	Theoretical Grade Elevations	Theoretical Grade Elevations Adjusted for Dead Load Deflections
BK. W. ABUT	47+05.56	-3.50	648.49	648.49
CL. BRG W. ABUT	47+08.06	-3.50	648.54	648.54
A	47+10.56	-3.50	648.59	648.61
B	47+16.81	-3.50	649.11	649.16
C	47+25.56	-3.50	649.84	649.90
D	47+34.31	-3.50	650.57	650.61
E	47+40.56	-3.50	651.09	651.09
CL.BRG PIER #1	47+43.06	-3.50	651.14	651.14
F	47+45.56	-3.50	651.19	651.19
G	47+51.81	-3.50	651.71	651.71
H	47+60.56	-3.50	652.44	652.45
I	47+69.31	-3.50	653.17	653.17
J	47+75.56	-3.50	653.69	653.69
CL. BRG. PIER #2	47+78.06	-3.50	653.74	653.74
K	47+80.56	-3.50	653.79	653.80
L	47+86.60	-3.50	654.29	654.32
M	47+95.14	-3.50	655.01	655.07
N	48+03.69	-3.50	655.72	655.77
O	48+10.56	-3.50	656.29	656.30
W CL. BRG PIER #3	48+12.23	-3.50	656.32	656.32
END OF DECK SPAN 3	48+12.90	-3.50	656.34	656.34

CL. BRIDGE				
Location	Station	Offset	Theoretical Grade Elevations	Theoretical Grade Elevations Adjusted for Dead Load Deflections
BK. W. ABUT	47+05.56	0.00	648.47	648.47
CL. BRG W. ABUT	47+08.06	0.00	648.52	648.52
A	47+10.56	0.00	648.57	648.59
B	47+16.81	0.00	649.09	649.14
C	47+25.56	0.00	649.82	649.88
D	47+34.31	0.00	650.55	650.59
E	47+40.56	0.00	651.07	651.07
CL.BRG PIER #1	47+43.06	0.00	651.12	651.12
F	47+45.56	0.00	651.17	651.17
G	47+51.81	0.00	651.69	651.69
H	47+60.56	0.00	652.42	652.43
I	47+69.31	0.00	653.15	653.15
J	47+75.56	0.00	653.67	653.67
CL. BRG. PIER #2	47+78.06	0.00	653.72	653.72
K	47+80.56	0.00	653.77	653.78
L	47+86.60	0.00	654.27	654.30
M	47+95.14	0.00	654.99	655.05
N	48+03.69	0.00	655.70	655.75
O	48+10.56	0.00	656.27	656.28
W CL. BRG PIER #3	48+12.23	0.00	656.30	656.30
END OF DECK SPAN 3	48+12.90	0.00	656.32	656.32

SHEET 6 OF 76 BRIDGE SHEETS **"CONTRACT NO. 87876"**

DRAWN BY: DS
CHECKED BY: JKC
DATE: 11/01/23

REVISIONS

LEVEL	BY	DATE	DESCRIPTION

Chamlin & Associates

PERU MORRIS
OTTAWA MENDOTA
ILLINOIS

PERU ITEP SHARED USE PATH PROJECT
SECTION 23-00073-00-BT
LASALLE COUNTY

TOP OF DECK ELEVATIONS - UNIT 1

CONSTRUCTION PLANS

CURRENT AS OF: 12/20/2024
SCALE: AS NOTED
SHEET 62
FILE NO.: 66437.00 Y-
OF 183

S. BEAM				
Location	Station	Offset	Theoretical Grade Elevations	Theoretical Grade Elevations Adjusted for Dead Load Deflections
BK. W. ABUT	47+05.56	3.50	648.45	648.45
CL. BRG W. ABUT	47+08.06	3.50	648.50	648.50
A	47+10.56	3.50	648.55	648.57
B	47+16.81	3.50	649.07	649.12
C	47+25.56	3.50	649.80	649.86
D	47+34.31	3.50	650.53	650.57
E	47+40.56	3.50	651.05	651.05
CL.BRG PIER #1	47+43.06	3.50	651.10	651.10
F	47+45.56	3.50	651.15	651.15
G	47+51.81	3.50	651.67	651.67
H	47+60.56	3.50	652.40	652.41
I	47+69.31	3.50	653.13	653.13
J	47+75.56	3.50	653.65	653.65
CL. BRG. PIER #2	47+78.06	3.50	653.70	653.70
K	47+80.56	3.50	653.75	653.76
L	47+86.60	3.50	654.25	654.28
M	47+95.14	3.50	654.97	655.03
N	48+03.69	3.50	655.68	655.73
O	48+10.56	3.50	656.25	656.26
W CL. BRG PIER #3	48+12.23	3.50	656.28	656.28
END OF DECK SPAN 3	48+12.90	3.50	656.30	656.30

S. FOP				
Location	Station	Offset	Theoretical Grade Elevations	Theoretical Grade Elevations Adjusted for Dead Load Deflections
BK. W. ABUT	47+05.56	6.00	648.44	648.44
CL. BRG W. ABUT	47+08.06	6.00	648.49	648.49
A	47+10.56	6.00	648.54	648.56
B	47+16.81	6.00	649.06	649.11
C	47+25.56	6.00	649.79	649.85
D	47+34.31	6.00	650.52	650.56
E	47+40.56	6.00	651.04	651.04
CL.BRG PIER #1	47+43.06	6.00	651.09	651.09
F	47+45.56	6.00	651.14	651.14
G	47+51.81	6.00	651.66	651.66
H	47+60.56	6.00	652.39	652.40
I	47+69.31	6.00	653.12	653.12
J	47+75.56	6.00	653.64	653.64
CL. BRG. PIER #2	47+78.06	6.00	653.69	653.69
K	47+80.56	6.00	653.74	653.75
L	47+86.60	6.00	654.24	654.27
M	47+95.14	6.00	654.96	655.02
N	48+03.69	6.00	655.67	655.72
O	48+10.56	6.00	656.24	656.25
W CL. BRG PIER #3	48+12.23	6.00	656.27	656.27
END OF DECK SPAN 3	48+12.90	6.00	656.29	656.29

S. EOD				
Location	Station	Offset	Theoretical Grade Elevations	Theoretical Grade Elevations Adjusted for Dead Load Deflections
BK. W. ABUT	47+05.56	7.00	648.44	648.44
CL. BRG W. ABUT	47+08.06	7.00	648.49	648.49
A	47+10.56	7.00	648.54	648.56
B	47+16.81	7.00	649.06	649.11
C	47+25.56	7.00	649.79	649.85
D	47+34.31	7.00	650.52	650.56
E	47+40.56	7.00	651.04	651.04
CL.BRG PIER #1	47+43.06	7.00	651.09	651.09
F	47+45.56	7.00	651.14	651.14
G	47+51.81	7.00	651.66	651.66
H	47+60.56	7.00	652.39	652.40
I	47+69.31	7.00	653.12	653.12
J	47+75.56	7.00	653.64	653.64
CL. BRG. PIER #2	47+78.06	7.00	653.69	653.69
K	47+80.56	7.00	653.74	653.75
L	47+86.60	7.00	654.24	654.27
M	47+95.14	7.00	654.96	655.02
N	48+03.69	7.00	655.67	655.72
O	48+10.56	7.00	656.24	656.25
W CL. BRG PIER #3	48+12.23	7.00	656.27	656.27
END OF DECK SPAN 3	48+12.90	7.00	656.29	656.29

SHEET 7 OF 76 BRIDGE SHEETS

"CONTRACT NO. 87876"

DRAWN BY: DS
CHECKED BY: JKC
DATE: 11/01/23

REVISIONS

LEVEL	BY	DATE	DESCRIPTION

Chamlin & Associates

PERU MORRIS
OTTAWA MENDOTA
ILLINOIS

PERU ITEP SHARED USE PATH PROJECT
SECTION 23-00073-00-BT
LASALLE COUNTY

TOP OF DECK ELEVATIONS - UNIT 1

CONSTRUCTION PLANS

CURRENT AS OF: 12/20/2024
SCALE: AS NOTED
SHEET 63
FILE NO.: 66437.00 Y-
OF 183

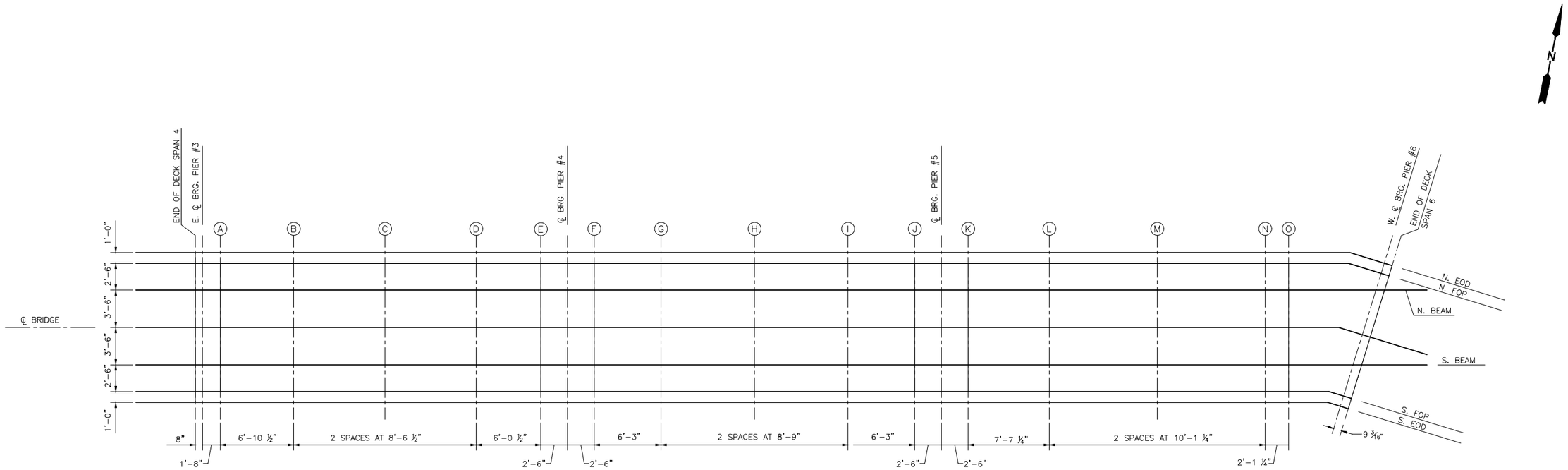

SPANS 4 - 6

EOD – EDGE OF DECK
FOP – FACE OF PARAPET

N. EOD				
Location	Station	Offset	Theoretical Grade Elevations	Theoretical Grade Elevations Adjusted for Dead Load Deflections
END OF DECK SPAN 4	48+13.22	-7.00	656.35	656.35
E CL. BRG PIER 3	48+13.89	-7.00	656.37	656.37
A	48+15.56	-7.00	656.40	656.41
B	48+22.43	-7.00	656.97	657.02
C	48+30.97	-7.00	657.68	657.74
D	48+39.52	-7.00	658.40	658.43
E	48+45.56	-7.00	658.90	658.91
CL.BRG PIER #4	48+48.06	-7.00	658.95	658.95
F	48+50.56	-7.00	659.00	659.00
G	48+56.81	-7.00	659.52	659.51
H	48+65.56	-7.00	660.25	660.24
I	48+74.31	-7.00	660.98	660.97
J	48+80.56	-7.00	661.50	661.49
CL. BRG. PIER #5	48+83.06	-7.00	661.55	661.55
K	48+85.56	-7.00	661.60	661.61
L	48+93.16	-7.00	662.23	662.30
M	49+03.27	-7.00	663.08	663.20
N	49+13.37	-7.00	663.92	664.02
O	49+15.56	-7.00	664.10	664.18
W CL. BRG PIER #6	49+22.57	-7.00	664.20	664.20
END OF DECK SPAN 6	49+23.34	-7.00	664.21	664.21

N. FOP				
Location	Station	Offset	Theoretical Grade Elevations	Theoretical Grade Elevations Adjusted for Dead Load Deflections
END OF DECK SPAN 4	48+13.22	-6.00	656.35	656.35
E CL. BRG PIER 3	48+13.89	-6.00	656.37	656.37
A	48+15.56	-6.00	656.40	656.41
B	48+22.43	-6.00	656.97	657.02
C	48+30.97	-6.00	657.68	657.74
D	48+39.52	-6.00	658.40	658.43
E	48+45.56	-6.00	658.90	658.91
CL.BRG PIER #4	48+48.06	-6.00	658.95	658.95
F	48+50.56	-6.00	659.00	659.00
G	48+56.81	-6.00	659.52	659.51
H	48+65.56	-6.00	660.25	660.24
I	48+74.31	-6.00	660.98	660.97
J	48+80.56	-6.00	661.50	661.49
CL. BRG. PIER #5	48+83.06	-6.00	661.55	661.55
K	48+85.56	-6.00	661.60	661.61
L	48+93.16	-6.00	662.23	662.30
M	49+03.27	-6.00	663.08	663.20
N	49+13.37	-6.00	663.92	664.02
O	49+15.56	-6.00	664.10	664.18
W CL. BRG PIER #6	49+22.57	-6.00	664.20	664.20
END OF DECK SPAN 6	49+23.34	-6.00	664.21	664.21

N. BEAM				
Location	Station	Offset	Theoretical Grade Elevations	Theoretical Grade Elevations Adjusted for Dead Load Deflections
END OF DECK SPAN 4	48+13.22	-3.50	656.34	656.34
E CL. BRG PIER 3	48+13.89	-3.50	656.36	656.36
A	48+15.56	-3.50	656.39	656.40
B	48+22.43	-3.50	656.96	657.01
C	48+30.97	-3.50	657.67	657.73
D	48+39.52	-3.50	658.39	658.42
E	48+45.56	-3.50	658.89	658.90
CL.BRG PIER #4	48+48.06	-3.50	658.94	658.94
F	48+50.56	-3.50	658.99	658.99
G	48+56.81	-3.50	659.51	659.50
H	48+65.56	-3.50	660.24	660.23
I	48+74.31	-3.50	660.97	660.96
J	48+80.56	-3.50	661.49	661.48
CL. BRG. PIER #5	48+83.06	-3.50	661.54	661.54
K	48+85.56	-3.50	661.59	661.60
L	48+93.16	-3.50	662.22	662.29
M	49+03.27	-3.50	663.07	663.19
N	49+13.37	-3.50	663.91	664.01
O	49+15.56	-3.50	664.09	664.17
W CL. BRG PIER #6	49+22.57	-4.37	664.19	664.19
END OF DECK SPAN 6	49+23.34	-4.61	664.20	664.20

CL. BRIDGE				
Location	Station	Offset	Theoretical Grade Elevations	Theoretical Grade Elevations Adjusted for Dead Load Deflections
END OF DECK SPAN 4	48+13.22	0.00	656.32	656.32
E CL. BRG PIER 3	48+13.89	0.00	656.34	656.34
A	48+15.56	0.00	656.37	656.38
B	48+22.43	0.00	656.94	656.99
C	48+30.97	0.00	657.65	657.71
D	48+39.52	0.00	658.37	658.40
E	48+45.56	0.00	658.87	658.88
CL BRG PIER #4	48+48.06	0.00	658.92	658.92
F	48+50.56	0.00	658.97	658.97
G	48+56.81	0.00	659.49	659.49
H	48+65.56	0.00	660.22	660.22
I	48+74.31	0.00	660.95	660.94
J	48+80.56	0.00	661.47	661.46
CL. BRG. PIER #5	48+83.06	0.00	661.52	661.52
K	48+85.56	0.00	661.57	661.58
L	48+93.16	0.00	662.20	662.26
M	49+03.27	0.00	663.05	663.16
N	49+13.37	0.00	663.89	663.98
O	49+15.56	0.00	664.07	664.14
W CL. BRG PIER #6	49+22.57	0.00	664.17	664.17
END OF DECK SPAN 6	49+23.34	0.00	664.18	664.18

SHEET 8 OF 76 BRIDGE SHEETS **"CONTRACT NO. 87876"**

DRAWN BY: DS
CHECKED BY: JKC
DATE: 11/01/23

REVISIONS

LEVEL	BY	DATE	DESCRIPTION

Chamlin & Associates

PERU MORRIS
OTTAWA MENDOTA
ILLINOIS

PERU ITEP SHARED USE PATH PROJECT
SECTION 23-00073-00-BT
LASALLE COUNTY

TOP OF DECK ELEVATIONS - UNIT 1

CONSTRUCTION PLANS

CURRENT AS OF: 12/20/2024
SCALE: AS NOTED
SHEET 64
FILE NO.: 66437.00 Y–
OF 183

S. BEAM				
Location	Station	Offset	Theoretical Grade Elevations	Theoretical Grade Elevations Adjusted for Dead Load Deflections
END OF DECK SPAN 4	48+13.22	3.50	656.30	656.30
E CL. BRG PIER 3	48+13.89	3.50	656.32	656.32
A	48+15.56	3.50	656.35	656.36
B	48+22.43	3.50	656.92	656.97
C	48+30.97	3.50	657.63	657.69
D	48+39.52	3.50	658.35	658.38
E	48+45.56	3.50	658.85	658.86
CL.BRG PIER #4	48+48.06	3.50	658.90	658.90
F	48+50.56	3.50	658.95	658.95
G	48+56.81	3.50	659.47	659.47
H	48+65.56	3.50	660.20	660.20
I	48+74.31	3.50	660.93	660.92
J	48+80.56	3.50	661.45	661.44
CL. BRG. PIER #5	48+83.06	3.50	661.50	661.50
K	48+85.56	3.50	661.55	661.56
L	48+93.16	3.50	662.18	662.23
M	49+03.27	3.50	663.03	663.13
N	49+13.37	3.50	663.87	663.94
O	49+15.56	3.50	664.05	664.10
W CL. BRG PIER #6	49+22.57	2.92	664.16	664.16
END OF DECK SPAN 6	49+23.34	2.72	664.17	664.17

S. FOP				
Location	Station	Offset	Theoretical Grade Elevations	Theoretical Grade Elevations Adjusted for Dead Load Deflections
END OF DECK SPAN 4	48+13.22	6.00	656.29	656.29
E CL. BRG PIER 3	48+13.89	6.00	656.31	656.31
A	48+15.56	6.00	656.34	656.35
B	48+22.43	6.00	656.91	656.96
C	48+30.97	6.00	657.62	657.68
D	48+39.52	6.00	658.34	658.37
E	48+45.56	6.00	658.84	658.85
CL.BRG PIER #4	48+48.06	6.00	658.89	658.89
F	48+50.56	6.00	658.94	658.94
G	48+56.81	6.00	659.46	659.46
H	48+65.56	6.00	660.19	660.19
I	48+74.31	6.00	660.92	660.91
J	48+80.56	6.00	661.44	661.43
CL. BRG. PIER #5	48+83.06	6.00	661.49	661.49
K	48+85.56	6.00	661.54	661.55
L	48+93.16	6.00	662.17	662.22
M	49+03.27	6.00	663.02	663.12
N	49+13.37	6.00	663.86	663.93
O	49+15.56	6.00	664.04	664.09
W CL. BRG PIER #6	49+22.57	6.00	664.14	664.14
END OF DECK SPAN 6	49+23.34	6.00	664.15	664.15

S. EOD				
Location	Station	Offset	Theoretical Grade Elevations	Theoretical Grade Elevations Adjusted for Dead Load Deflections
END OF DECK SPAN 4	48+13.22	7.00	656.29	656.29
E CL. BRG PIER 3	48+13.89	7.00	656.31	656.31
A	48+15.56	7.00	656.34	656.35
B	48+22.43	7.00	656.91	656.96
C	48+30.97	7.00	657.62	657.68
D	48+39.52	7.00	658.34	658.37
E	48+45.56	7.00	658.84	658.85
CL.BRG PIER #4	48+48.06	7.00	658.89	658.89
F	48+50.56	7.00	658.94	658.94
G	48+56.81	7.00	659.46	659.46
H	48+65.56	7.00	660.19	660.19
I	48+74.31	7.00	660.92	660.91
J	48+80.56	7.00	661.44	661.43
CL. BRG. PIER #5	48+83.06	7.00	661.49	661.49
K	48+85.56	7.00	661.54	661.55
L	48+93.16	7.00	662.17	662.22
M	49+03.27	7.00	663.02	663.12
N	49+13.37	7.00	663.86	663.93
O	49+15.56	7.00	664.04	664.09
W CL. BRG PIER #6	49+22.57	7.00	664.14	664.14
END OF DECK SPAN 6	49+23.34	7.00	664.15	664.15

SHEET 9 OF 76 BRIDGE SHEETS

"CONTRACT NO. 87876"

DRAWN BY: DS
CHECKED BY: JKC
DATE: 11/01/23

REVISIONS

LEVEL	BY	DATE	DESCRIPTION

Chamlin & Associates

PERU MORRIS
OTTAWA MENDOTA
ILLINOIS

PERU ITEP SHARED USE PATH PROJECT
SECTION 23-00073-00-BT
LASALLE COUNTY

TOP OF DECK ELEVATIONS - UNIT 1

CONSTRUCTION PLANS

CURRENT AS OF: 12/20/2024
SCALE: AS NOTED
SHEET 65
FILE NO.: 66437.00 Y-
OF 183

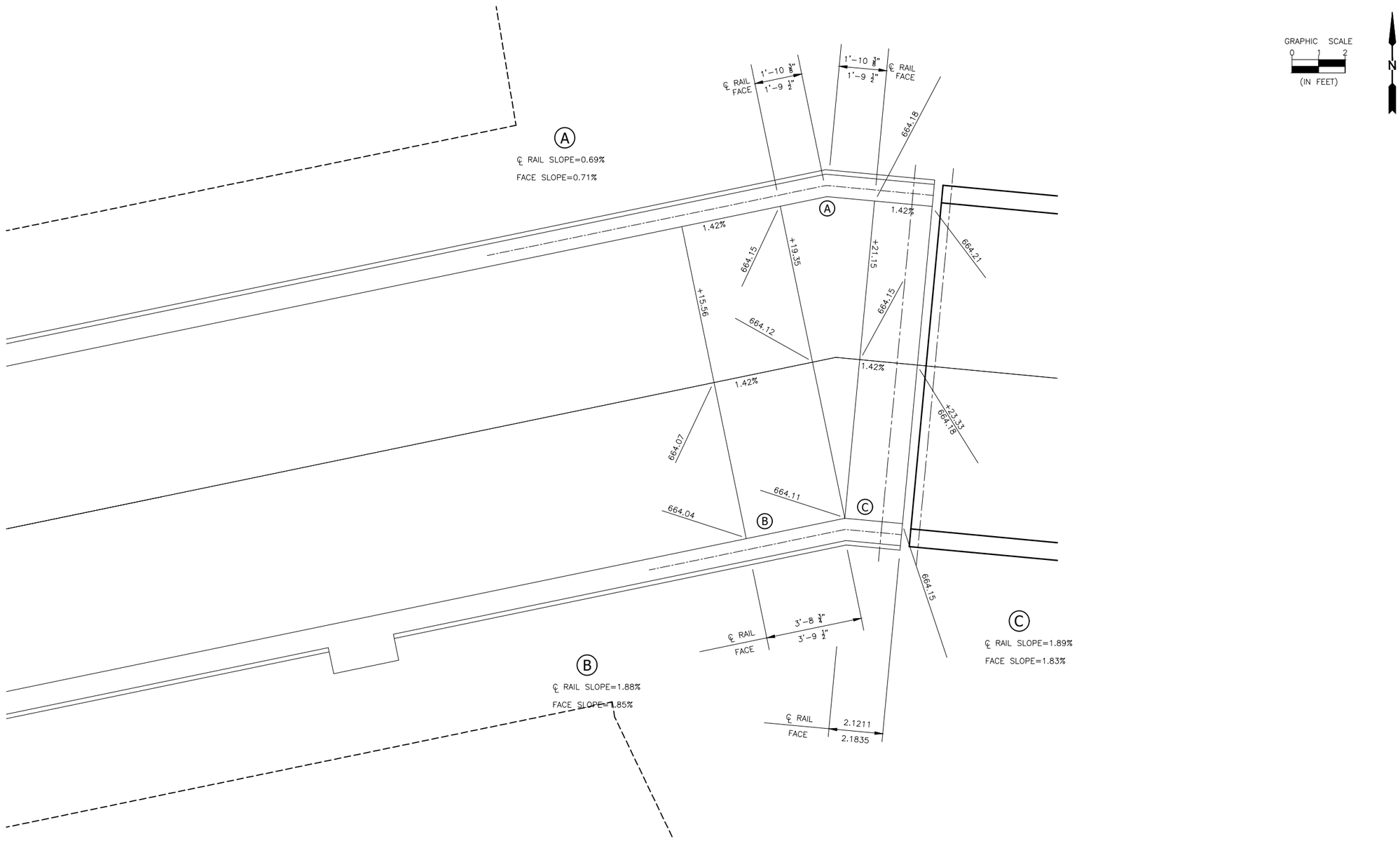

SHEET 10 OF 76 BRIDGE SHEETS

"CONTRACT NO. 87876"

DRAWN BY: JJW	REVISIONS				PERU MORRIS	PERU ITEP SHARED USE PATH PROJECT	SPECIAL DECK ELEVATION DETAIL	CONSTRUCTION	CURRENT AS OF: 12/20/2024	
CHECKED BY: JKC	LEVEL	BY	DATE	DESCRIPTION	OTTAWA MENDOTA	SECTION 23-00073-00-BT	UNIT 1	PLANS	SCALE: AS NOTED	SHEET 66
DATE: 08/2023					ILLINOIS	LASALLE COUNTY	SN 050 7500		FILE NO.: 66437.00 Y-	OF 183

Chamlin & Associates

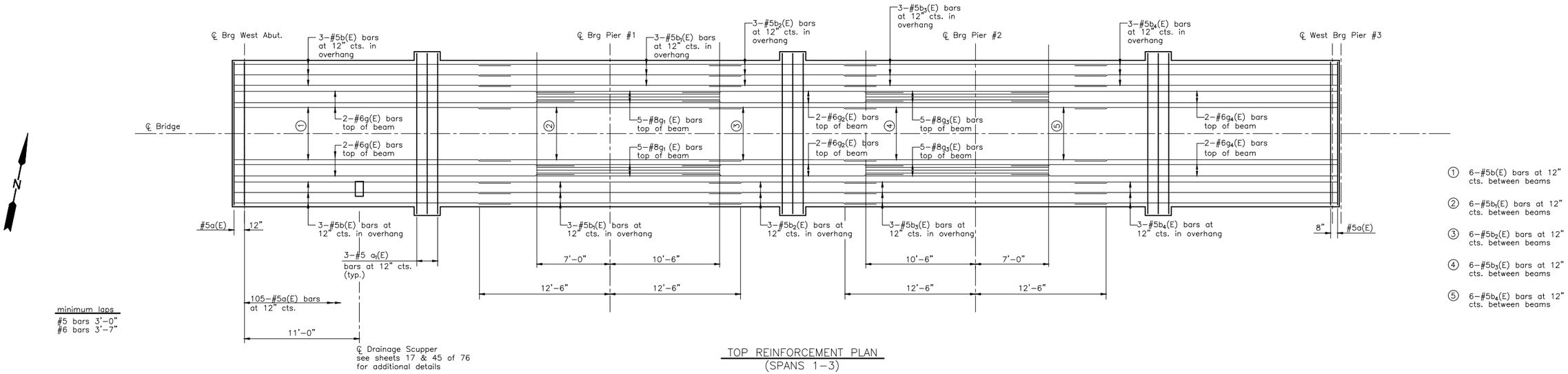

TOP REINFORCEMENT PLAN
(SPANS 1–3)

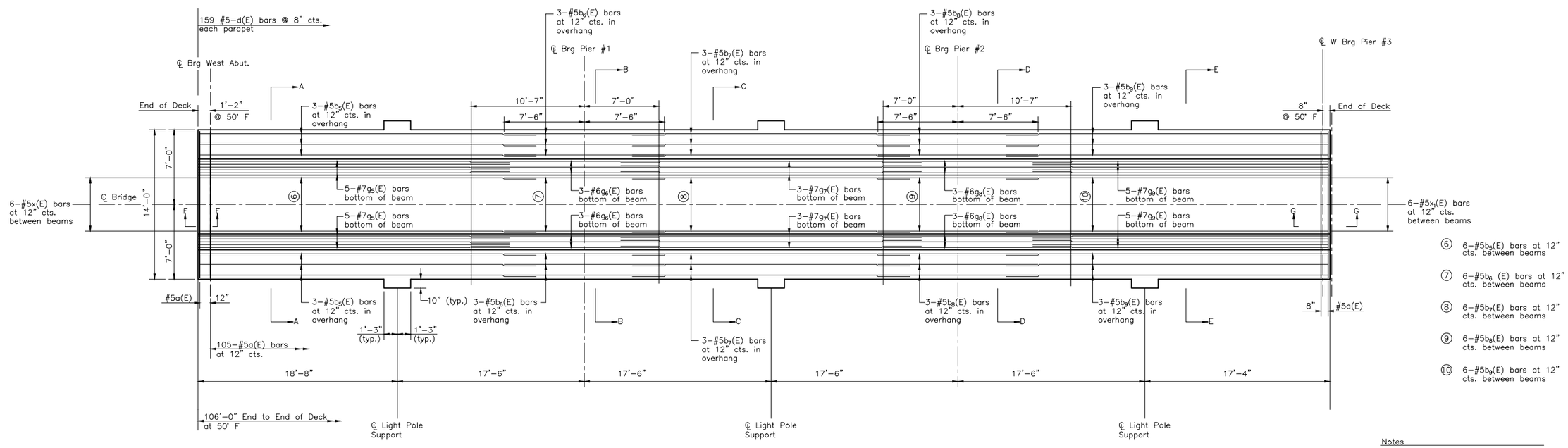

DIMENSIONAL PLAN AND
BOTTOM REINFORCEMENT PLAN
(SPANS 1–3)

Notes

Dimensions shown are horizontal
They are not along the slopes

See sheet 13 of 76 for Sections:
A–A, B–B, C–C, D–D & E–E

See sheet 13 of 76 for Sections F & G

See sheet 12 of 76 for Beam Elevation View

(Sheet 1 of 3) Contract 87876

DRAWN BY: DS	REVISIONS			
CHECKED BY: JKC	LEVEL	BY	DATE	DESCRIPTION
DATE: 06/2023				

Chamlin & Associates

PERU MORRIS
OTTAWA MENDOTA
ILLINOIS

PERU ITEP SHARED USE PATH PROJECT
SECTION 23-00073-00-BT
LASALLE COUNTY

SUPERSTRUCTURE PLAN - UNIT 1
SPANS 1 - 3
SN 050-7500

CONSTRUCTION PLANS

CURRENT AS OF: 12/20/2024	
SCALE: AS NOTED	SHEET 67
FILE NO.: 66437.00 Y–	OF 183

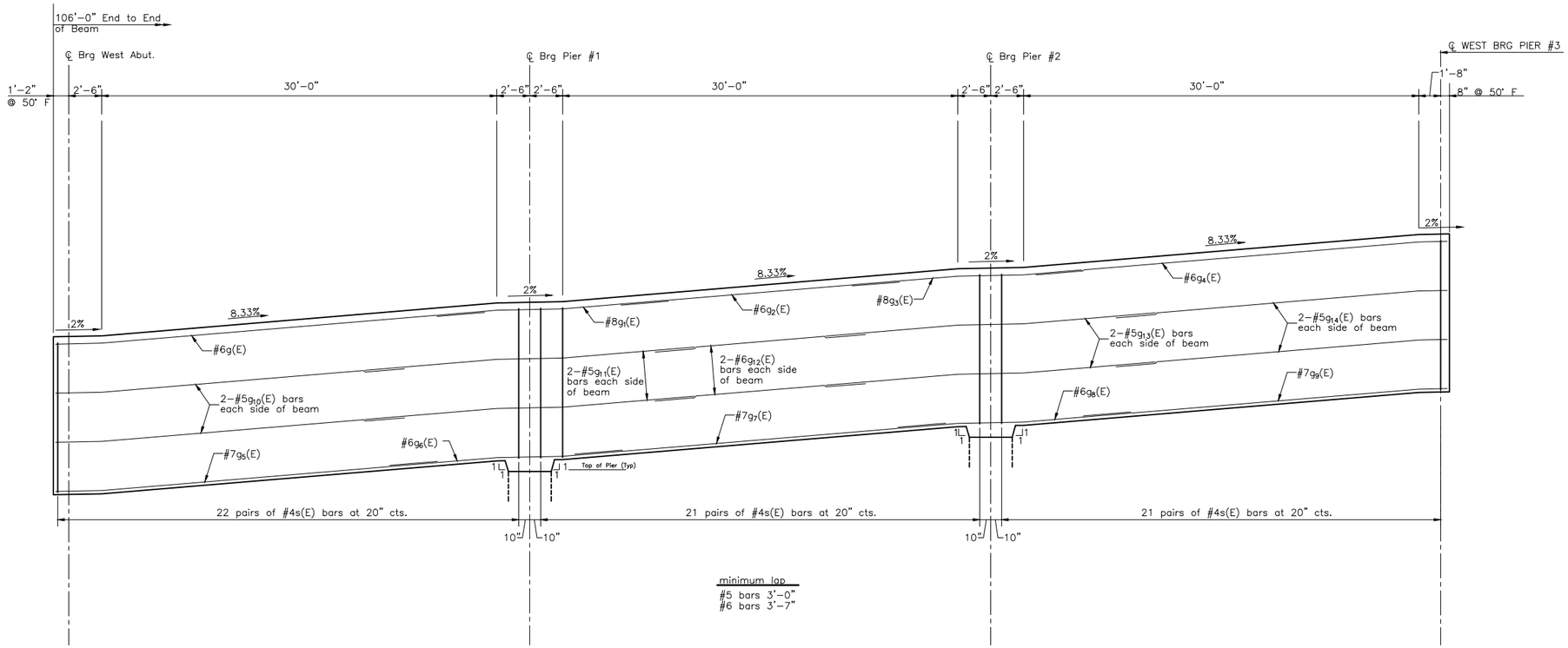

BEAM ELEVATION – LOOKING NORTH
(SPANS 1–3)

BILL OF MATERIAL

Bar	No.	Size	Length	Shape
a (E)	214	5	13'-8"	
a_1(E)	9	5	15'-4"	
a_3(E)	8	5	8'-3"	
a_4(E)	8	5	1'-6"	
b (E)	12	5	26'-7"	
b_2(E)	12	5	25'-1"	
b_2(E)	12	5	16'-1"	
b_3(E)	12	5	25'-1"	
b_4(E)	12	5	25'-3"	
b_5(E)	12	5	31'-7"	
b_6(E)	12	5	15'-1"	
b_7(E)	12	5	26'-1"	
b_8(E)	12	5	15'-0"	
b_9(E)	12	5	30'-3"	
d(E)	318	5	6'-8"	
d_1(E)	318	5	8'-5"	
d_2(E)	18	6	5'-5"	
d_3(E)	36	6	8'-10"	
e_6(E)	36	4	11'-4"	
e_7(E)	48	4	11'-4"	
e_8(E)	12	4	12'-6"	
e_9(E)	12	4	11'-2"	
e_{10}(E)	8	4	35'-11"	
e_{11}(E)	8	4	34'-9"	
e_{12}(E)	8	4	34'-7"	
g (E)	4	6	32'-8"	
g_1(E)	10	8	17'-6"	
g_2(E)	4	6	21'-3"	
g_3(E)	10	8	19'-3"	
g_4(E)	4	6	31'-4"	
g_5(E)	10	7	29'-1"	
g_6(E)	6	6	17'-8"	
g_7(E)	6	7	28'-3"	
g_8(E)	6	6	17'-8"	
g_9(E)	10	7	27'-9"	
g_{10}(E)	8	5	26'-7"	
g_{11}(E)	8	5	25'-1"	
g_{12}(E)	8	5	16'-1"	
g_{13}(E)	8	5	25'-1"	
g_{14}(E)	8	5	25'-3"	
s(E)	256	4	7'-7"	
x(E)	6	5	6'-11"	
x_1(E)	6	5	6'-11"	
Concrete Superstructure			Cu. Yd.	97.0
Reinforcement Bars, Epoxy Coated			Pound	18,930
Rubbed Finish			Sq. Ft.	1607

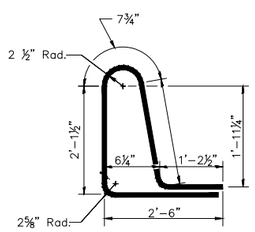

BAR d(E)

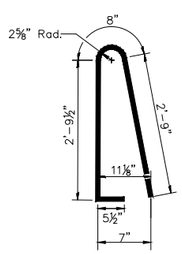

BAR d_1(E)

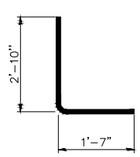

BAR d_2(E)

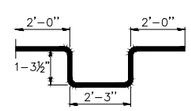

BAR d_3(E)

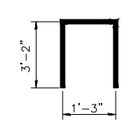

BAR s(E)

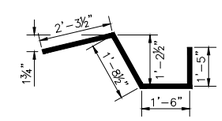

BAR x_1(E)

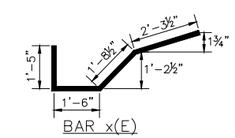

BAR x(E)

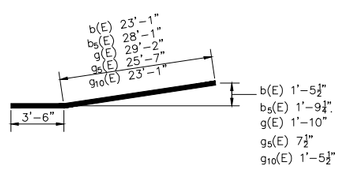

BAR b(E), b_5(E), g(E), g_5(E) and g_{10}(E)

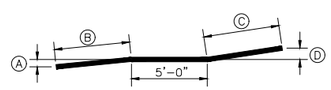

BAR b_1(E), b_3(E), b_6(E), b_8(E) and g_1(E)
BAR g_3(E), g_6(E), g_8(E), g_{11}(E) and g_{13}(E)

Bar	A	B	C	D
b_1(E)	7⅝"	10'-0½"	10'-0½"	7⅝"
b_3(E)	7⅝"	10'-0½"	10'-0½"	7⅝"
b_6(E)	3⅞"	5'-0½"	5'-0½"	3⅞"
b_8(E)	3⅞"	5'-0"	5'-0"	3⅞"
g_1(E)	3⅜"	4'-6"	8'-0"	6"
g_3(E)	6"	8'-0"	4'-6"	3⅜"
g_6(E)	6⅛"	8'-1½"	4'-6½"	3½"
g_8(E)	3⅜"	4'-6½"	8'-1½"	6⅛"
g_{11}(E)	7⅝"	10'-0½"	10'-0½"	7⅝"
g_{13}(E)	7⅝"	10'-0½"	10'-0½"	7⅝"

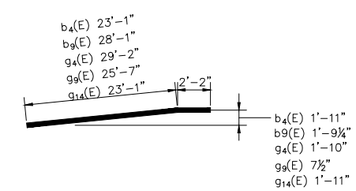

BAR b_4(E), b_9(E), g_4(E), g_9(E) and g_{14}(E)

DRAWN BY: LMP
CHECKED BY: JKC
DATE: 06/2023

REVISIONS

LEVEL	BY	DATE	DESCRIPTION

Chamlin & Associates

PERU MORRIS
OTTAWA MENDOTA
ILLINOIS

PERU ITEP SHARED USE PATH PROJECT
SECTION 23-00073-00-BT
LASALLE COUNTY

SUPERSTRUCTURE DETAILS - UNIT 1
SPANS 1 - 3
SN 050-7500

CONSTRUCTION PLANS

CURRENT AS OF: 12/20/2024
SCALE: AS NOTED
SHEET 68
FILE NO.: 66437.00 Y-
OF 183

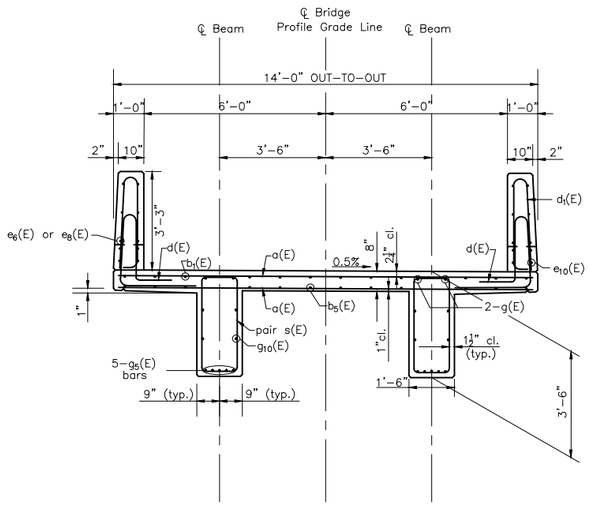

SECTION A-A

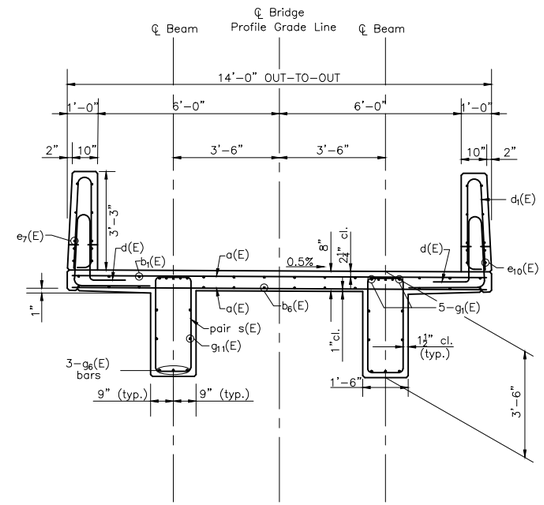

SECTION B-B

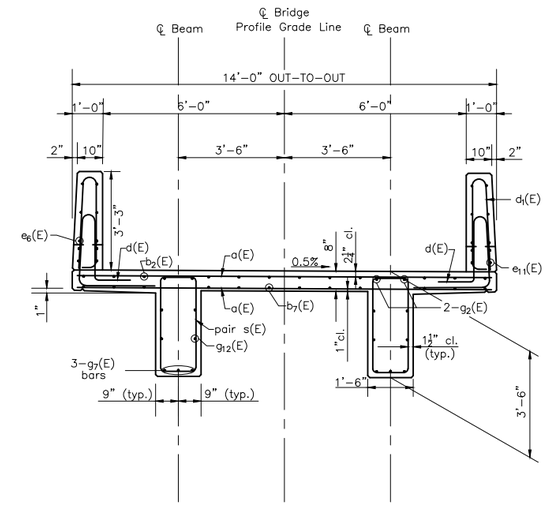

SECTION C-C

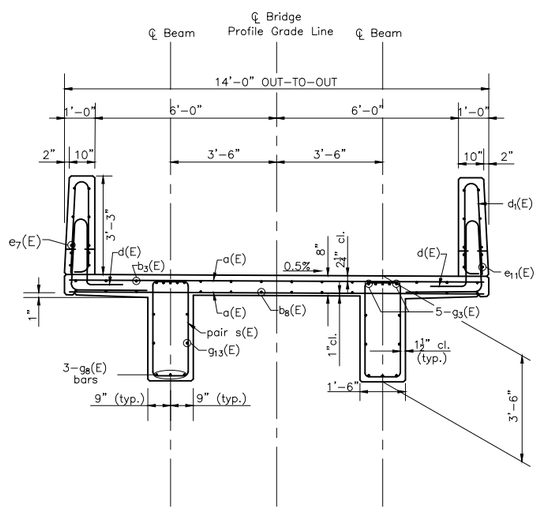

SECTION D-D

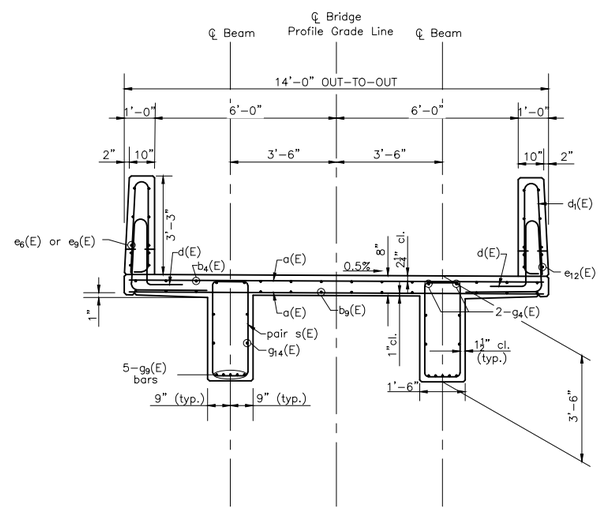

SECTION E-E

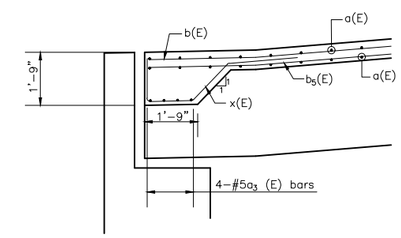

SECTION F

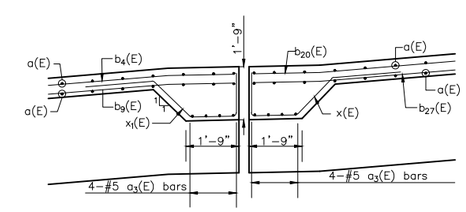

SECTION G-G

DRAWN BY: LMP	REVISIONS			PERU MORRIS OTTAWA MENDOTA ILLINOIS	PERU ITEP SHARED USE PATH PROJECT SECTION 23-00073-00-BT LASALLE COUNTY	SUPERSTRUCTURE DETAILS - UNIT 1 SPANS 1 - 3 SN 050-7500	CONSTRUCTION PLANS
CHECKED BY: JKC	LEVEL	BY	DATE	DESCRIPTION			CURRENT AS OF: 12/20/2024
DATE: 06/2023							SCALE: AS NOTED / SHEET 69
							FILE NO.: 66437.00 Y- / OF 183

Chamlin & Associates

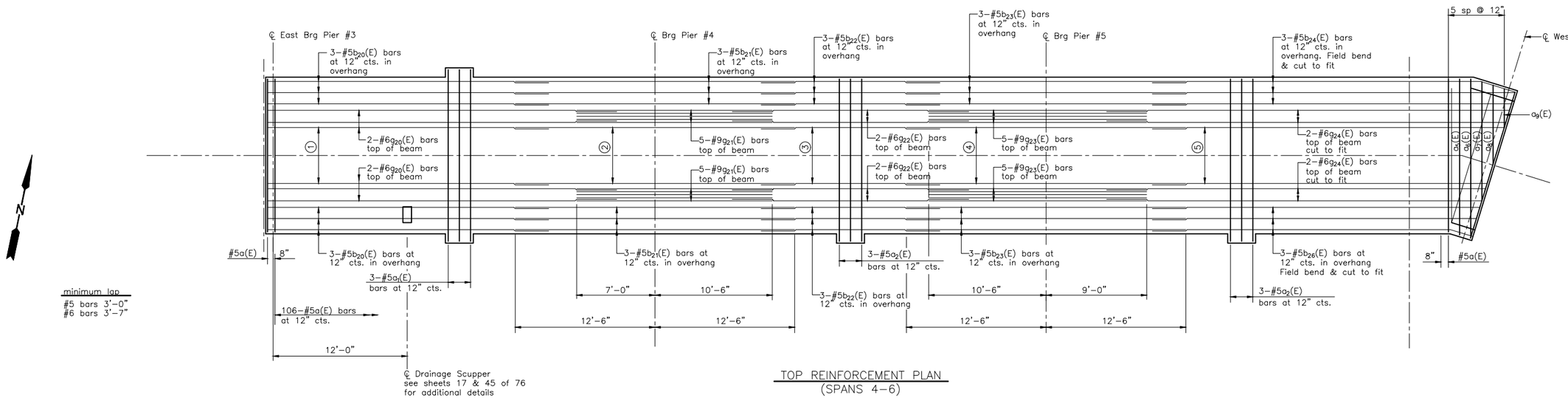

TOP REINFORCEMENT PLAN
(SPANS 4–6)

① 6–#5b20(E) bars at 12" cts. between beams

② 6–#5b21(E) bars at 12" cts. between beams

③ 6–#5b22(E) bars at 12" cts. between beams

④ 6–#5b23(E) bars at 12" cts. between beams

⑤ 6–#5b25(E) bars at 12" cts. between beams Field cut to fit

⑥ 6–#5b27(E) bars at 12" cts. between beams

⑦ 6–#5b28(E) bars at 12" cts. between beams

⑧ 6–#5b29(E) bars at 12" cts. between beams

⑨ 6–#5b30(E) bars at 12" cts. between beams

⑩ 6–#5b32(E) bars at 12" cts. between beams Field cut to fit

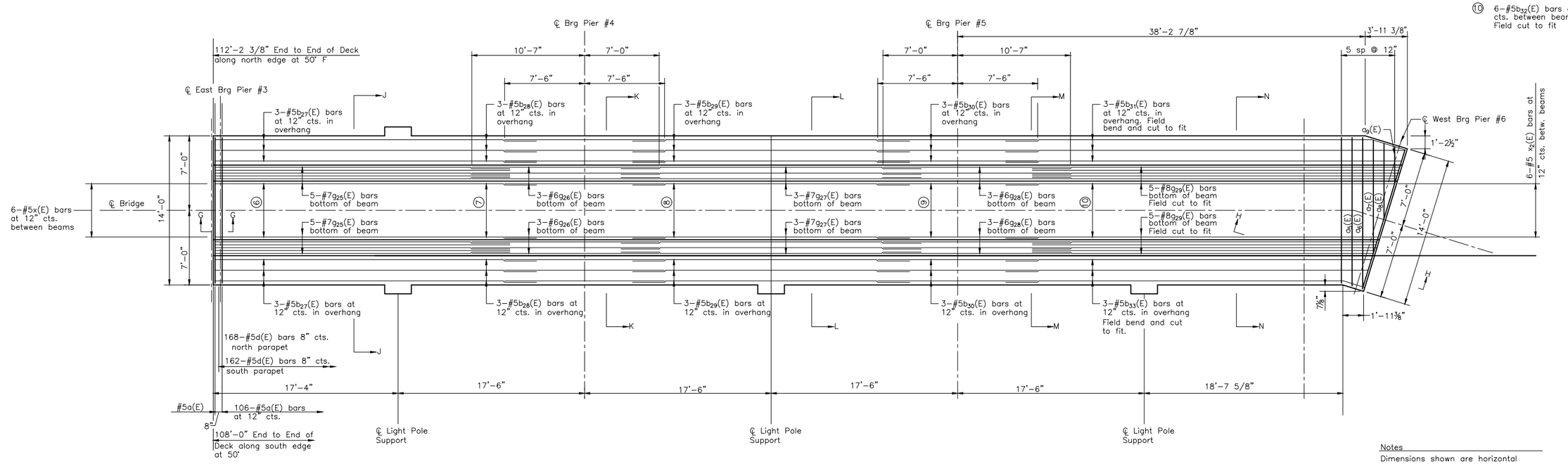

DIMENSIONAL PLAN AND
BOTTOM REINFORCEMENT PLAN
(SPANS 4–6)

Notes

Dimensions shown are horizontal
They are not along the slopes

See sheet 16 of 76 for Sections:
J–J, K–K, L–L, M–M, & N–N

See sheet 16 of 76 for Sections G & H

See sheet 15 of 76 for Beam Elevation View

DRAWN BY: LMP	REVISIONS			
CHECKED BY: JKC	LEVEL	BY	DATE	DESCRIPTION
DATE: 06/2023				

Chamlin & Associates

PERU MORRIS
OTTAWA MENDOTA
ILLINOIS

PERU ITEP SHARED USE PATH PROJECT
SECTION 23-00073-00-BT
LASALLE COUNTY

SUPERSTRUCTURE PLAN - UNIT 1
SPANS 4 - 6
SN 050-7500

CONSTRUCTION PLANS

CURRENT AS OF: 12/20/2024	
SCALE: AS NOTED	SHEET 70
FILE NO.: 66437.00 Y–	OF 183

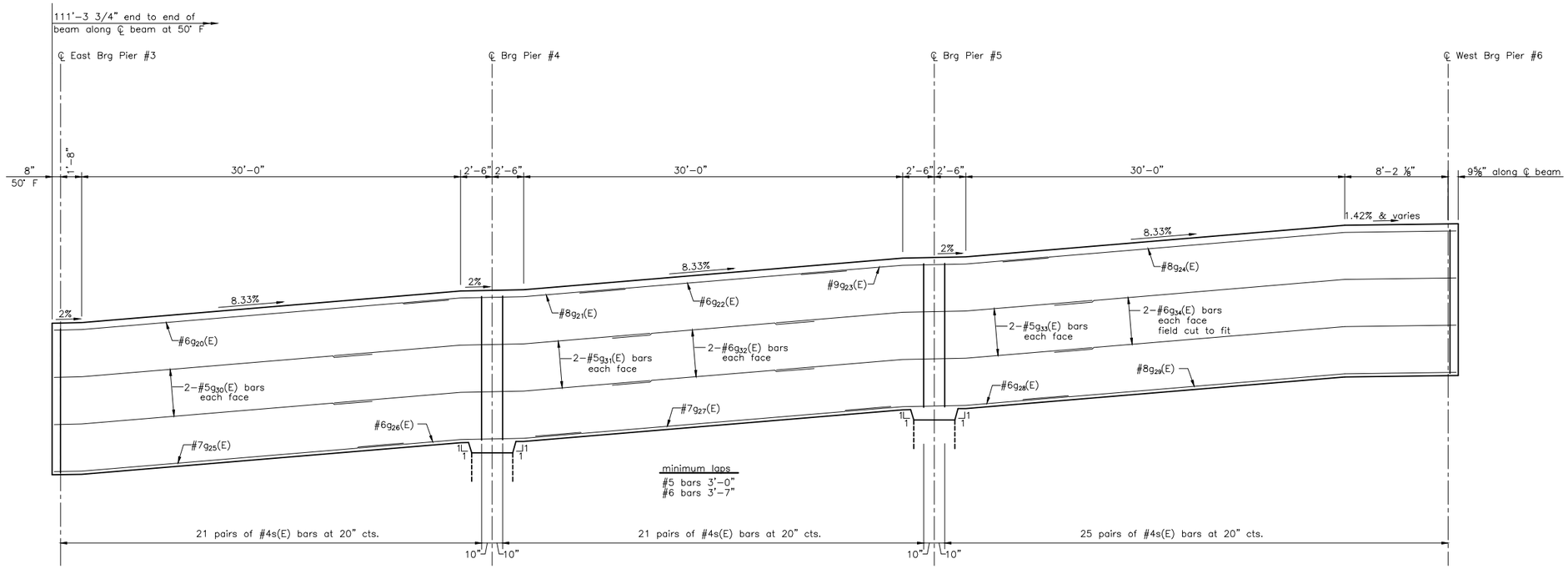

NORTH BEAM ELEVATION – LOOKING NORTH
(SPANS 4–6)

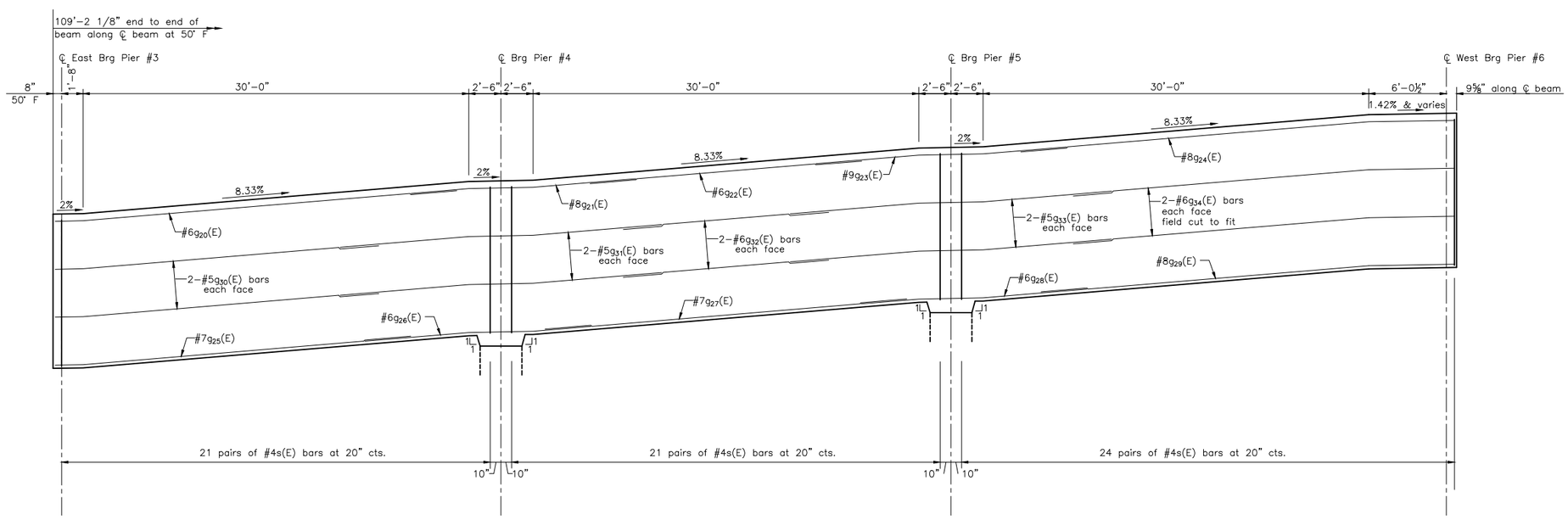

SOUTH BEAM ELEVATION – LOOKING NORTH
(SPANS 4–6)

BILL OF MATERIAL

Bar	No.	Size	Length	Shape
a (E)	214	5	13'-8"	
a_1(E)	3	5	15'-4"	
a_2(E)	6	5	14'-6"	
a_3(E)	4	5	8'-3"	
a_4(E)	4	5	8'-4"	
a_5(E)	2	5	13'-11"	
a_6(E)	2	5	14'-1"	
a_7(E)	2	5	10'-7"	
a_8(E)	2	5	7'-0"	
a_9(E)	2	5	3'-5"	
b_{20}(E)	12	5	25'-3"	
b_{21}(E)	12	5	25'-1"	
b_{22}(E)	12	5	16'-1"	
b_{23}(E)	12	5	25'-1"	
b_{24}(E)	3	5	32'-7"	
b_{25}(E)	6	5	31'-11"	
b_{26}(E)	3	5	29'-5"	
b_{27}(E)	12	5	30'-3"	
b_{28}(E)	12	5	15'-1"	
b_{29}(E)	12	5	16'-1"	
b_{30}(E)	12	5	15'-1"	
b_{31}(E)	3	5	36'-7"	
b_{32}(E)	6	5	37'-7"	
b_{33}(E)	3	5	34'-5"	
d(E)	330	5	6'-8"	
d_1(E)	330	5	8'-5"	
d_2(E)	12	6	4'-5"	
d_3(E)	24	6	8'-10"	
e_6(E)	36	4	11'-4"	
e_7(E)	48	4	11'-4"	
e_8(E)	12	4	11'-2"	
e_{11}(E)	8	4	34'-9"	
e_{13}(E)	6	4	18'-5"	
e_{14}(E)	8	4	34'-7"	
e_{15}(E)	4	4	14'-3"	
e_{16}(E)	4	4	30'-10"	
e_{17}(E)	4	4	17'-7"	
e_{18}(E)	4	4	23'-1"	
e_{19}(E)	6	4	14'-10"	
g_{20}(E)	4	6	31'-4"	
g_{21}(E)	10	8	17'-6"	
g_{22}(E)	4	6	21'-3"	
g_{23}(E)	10	9	19'-6"	
g_{24}(E)	4	6	36'-0"	
g_{25}(E)	10	7	27'-9"	
g_{26}(E)	6	6	17'-8"	
g_{27}(E)	6	7	28'-3"	
g_{28}(E)	6	6	17'-8"	
g_{29}(E)	10	8	34'-5"	
g_{30}(E)	8	5	25'-3"	
g_{31}(E)	8	5	25'-1"	
g_{32}(E)	8	5	16'-1"	
g_{33}(E)	8	5	25'-1"	
g_{34}(E)	8	5	31'-11"	
s(E)	266	4	7'-7"	
x_1(E)	6	5	6'-11"	
x_2(E)	6	5	6'-11"	

Concrete Superstructure	Cu. Yd.	100.1
Reinforcement Bars, Epoxy Coated	Pound	19,240
Rubbed Finish	Sq. Ft.	1,650

DRAWN BY: LMP
CHECKED BY: JKC
DATE: 06/2023

REVISIONS

LEVEL	BY	DATE	DESCRIPTION

Chamlin & Associates

PERU MORRIS
OTTAWA MENDOTA
ILLINOIS

PERU ITEP SHARED USE PATH PROJECT
SECTION 23-00073-00-BT
LASALLE COUNTY

SUPERSTRUCTURE DETAILS - UNIT 1
SPANS 4 - 6
SN 050-7500

CONSTRUCTION PLANS

CURRENT AS OF: 12/20/2024
SCALE: AS NOTED
SHEET 71
FILE NO.: 66437.00 Y–
OF 183

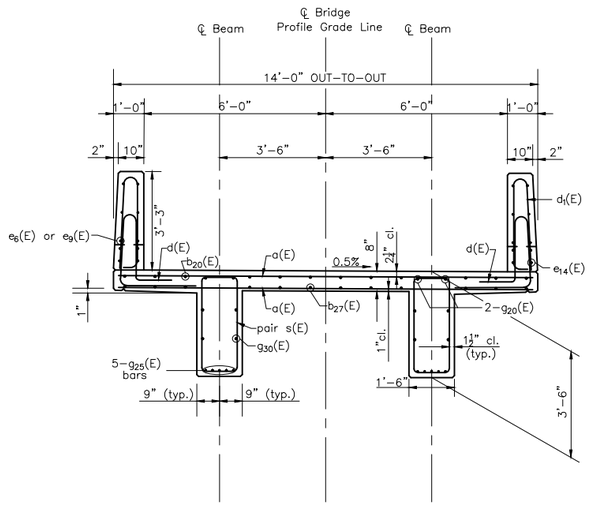

SECTION J-J

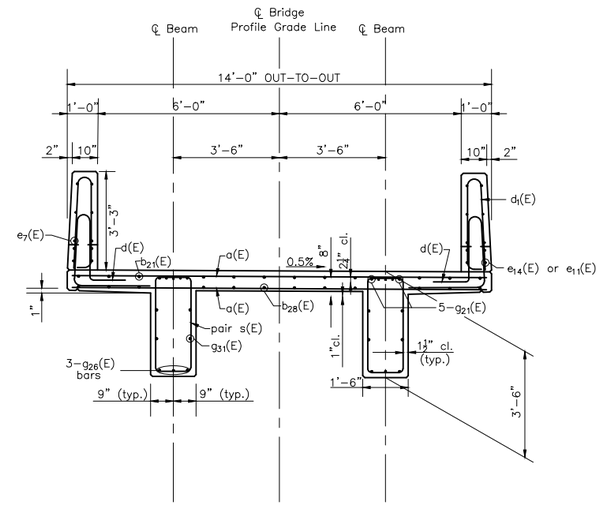

SECTION K-K

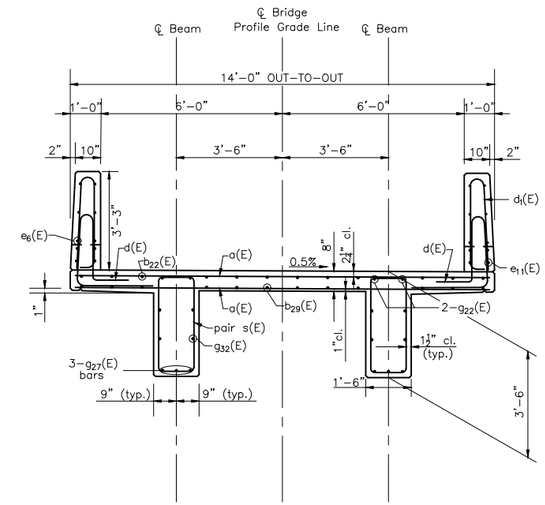

SECTION L-L

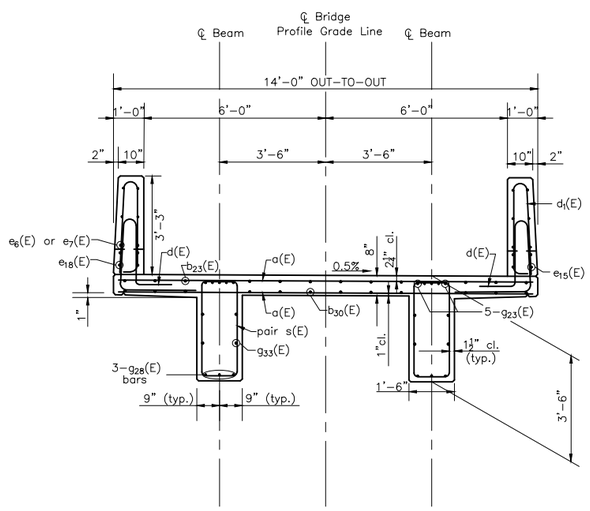

SECTION M-M

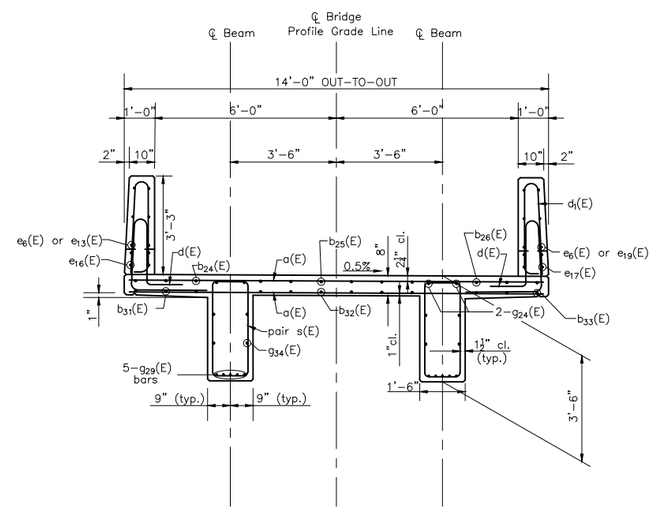

SECTION N-N

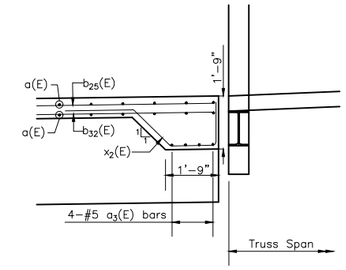

SECTION H-H

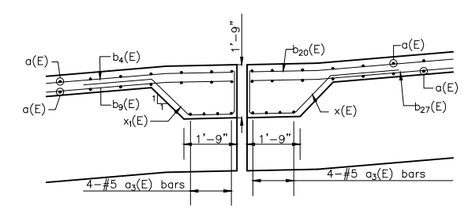

SECTION G-G

DRAWN BY: LMP	REVISIONS			PERU MORRIS OTTAWA MENDOTA ILLINOIS	PERU ITEP SHARED USE PATH PROJECT SECTION 23-00073-00-BT LASALLE COUNTY
CHECKED BY: JKC	LEVEL / BY / DATE / DESCRIPTION				SUPERSTRUCTURE DETAILS - UNIT 1 SPANS 4 - 6 SN 050-7500
DATE: 06/2023				Chamlin & Associates	CONSTRUCTION PLANS

CURRENT AS OF: 12/20/2024	
SCALE: AS NOTED	SHEET 72
FILE NO.: 66437.00 Y-	OF 183

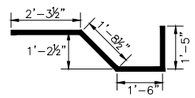

BAR $x_2(E)$

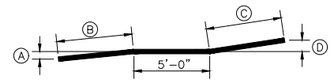

BAR $b_{21}(E)$, $b_{23}(E)$, $b_{28}(E)$, $b_{30}(E)$ and $g_{21}(E)$
BAR $g_{23}(E)$, $g_{26}(E)$, $g_{28}(E)$, $g_{31}(E)$ and $g_{33}(E)$

Bar	A	B	C	D
$b_{21}(E)$	7⅝"	10'-0½"	10'-0½"	7⅝"
$b_{23}(E)$	7⅝"	10'-0½"	10'-0½"	7⅝"
$b_{28}(E)$	3⅞"	5'-0½"	5'-0½"	3⅞"
$b_{30}(E)$	3⅞"	5'-0½"	5'-0½"	3⅞"
$g_{21}(E)$	3⅜"	4'-6"	8'-0"	6"
$g_{23}(E)$	6"	8'-0"	6'-6"	5"
$g_{26}(E)$	6⅛"	8'-1½"	4'-6½"	3⅜"
$g_{28}(E)$	3⅜"	4'-6½"	8'-1½"	6⅛"
$g_{31}(E)$	7⅝"	10'-0½"	10'-0½"	7⅝"
$g_{33}(E)$	7⅝"	10'-0½"	10'-0½"	7⅝"

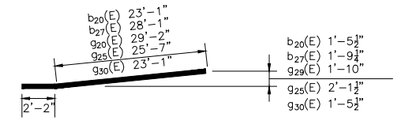

BAR $b_{20}(E)$, $b_{27}(E)$, $g_{20}(E)$, $g_{25}(E)$ and $g_{30}(E)$

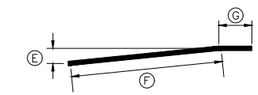

BAR $b_{24}(E)$, $b_{25}(E)$, $b_{26}(E)$, $b_{32}(E)$ and $b_{33}(E)$
BAR $g_{24}(E)$, $g_{29}(E)$, and $g_{34}(E)$

Bar	E	F	G
$b_{24}(E)$	1'-7½"	23'-1½"	9'-5½"
$b_{25}(E)$	1'-6⅜"	23'-1"	8'-10"
$b_{26}(E)$	1'-7½"	23'-1½"	6'-3½"
$b_{31}(E)$	1'-11⅝"	28'-1"	8'-6"
$b_{32}(E)$	1'-11⅝"	28'-1"	9'-5½"
$b_{33}(E)$	1'-11⅝"	28'-1"	6'-4"
$g_{34}(E)$	1'-9⅝"	27'-2"	8'-10"
$g_{29}(E)$	1'-9½"	25'-7"	8'-10"
$g_{34}(E)$	1'-6⅜"	23'-1"	8'-10"

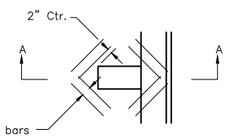

2- #5 bars $a_4(E)$ bars at 4" cts. Tied to bottom of top reinforcement mat. (typ.)

PLAN

Note:
Cut longitudinal reinforcement to clear dainage scupper. DS-11.
See sheet ___ of ___ for details.

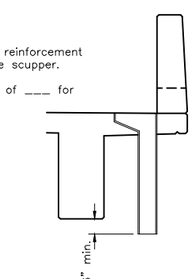

SECTION A-A

DETAIL AT DRAINAGE SCUPPER

Notes
See Sheet 12 of 76 for bent bar details for the d(E), $d_1(E)$, $d_2(E)$, $d_3(E)$, s(E) and x(E) bars.

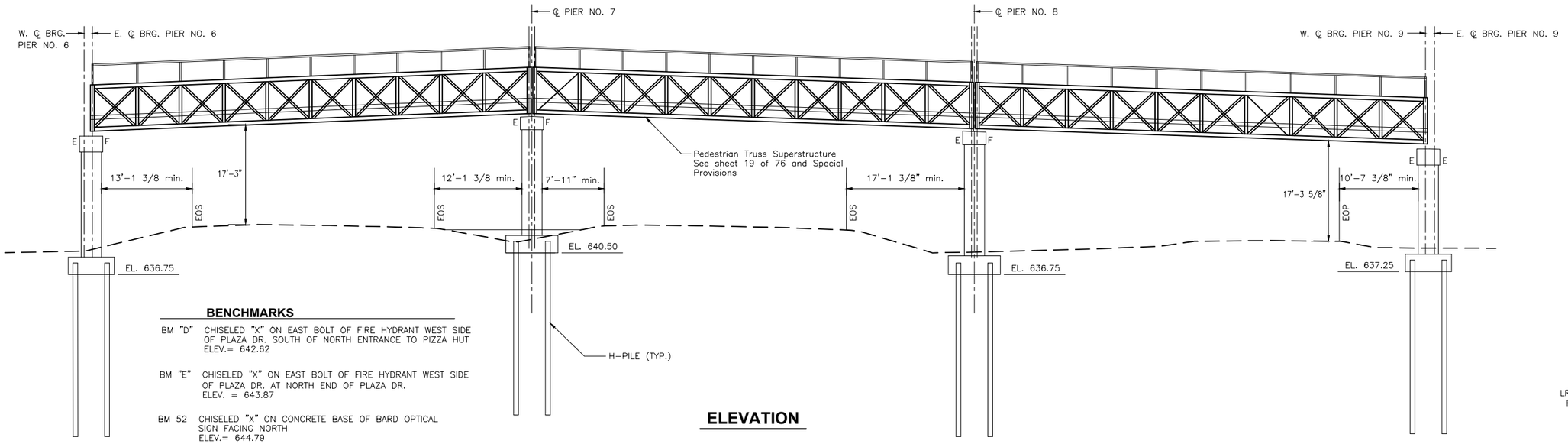

ELEVATION

BENCHMARKS

BM "D" CHISELED "X" ON EAST BOLT OF FIRE HYDRANT WEST SIDE OF PLAZA DR. SOUTH OF NORTH ENTRANCE TO PIZZA HUT
ELEV.= 642.62

BM "E" CHISELED "X" ON EAST BOLT OF FIRE HYDRANT WEST SIDE OF PLAZA DR. AT NORTH END OF PLAZA DR.
ELEV. = 643.87

BM 52 CHISELED "X" ON CONCRETE BASE OF BARD OPTICAL SIGN FACING NORTH
ELEV.= 644.79

BM 53 CHISELED "X" ON CONCRETE BASE OF LIGHT POLE FACING NORTH, LOCATED IN NORTH EAST END OF LIBERTY VILLAGE PARKING LOT JUST SOUTH OF CROP LINE
ELEV.= 642.93

CURVE 6 (IL 251)
DELTA=26°59'59"
R=5729.65'
T=1375.55'
L=2700.00'
CHORD
S 13°42'33" E
2675.09'
P.C. STA. 90+41.40
P.I. STA. 104+16.95
P.T. STA. 117+41.4

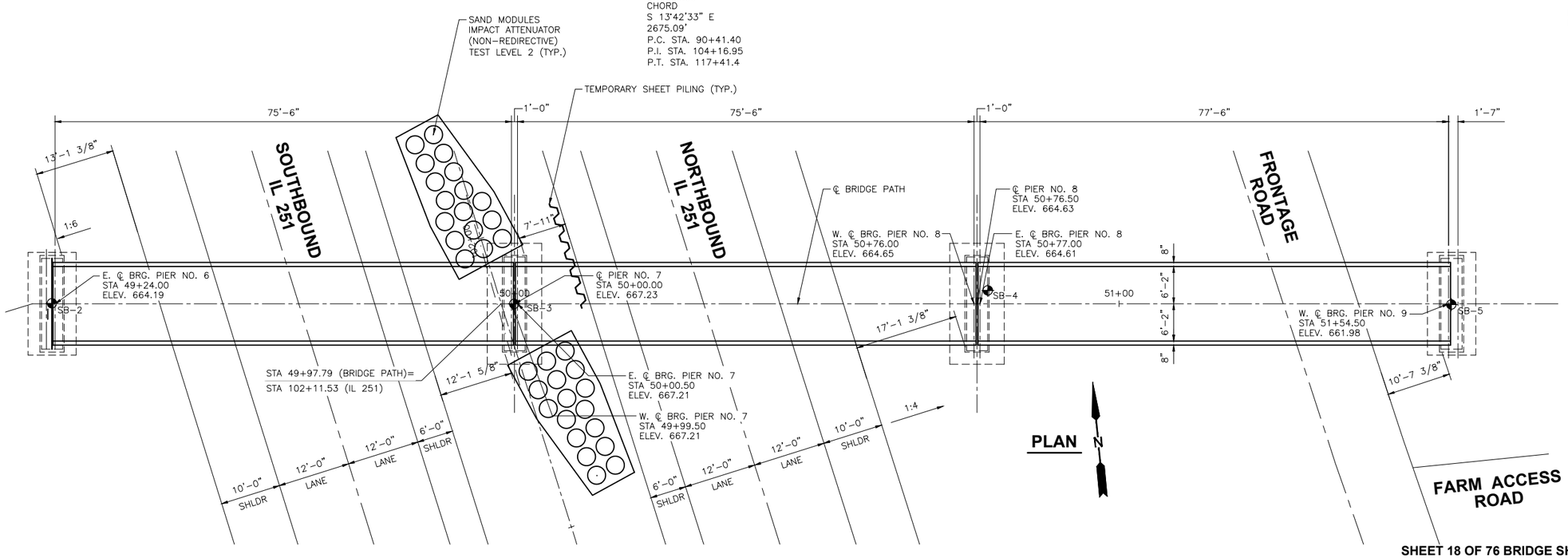

PLAN

LOADING
Uniform Lane Loading = 90 psf
Vehicle Load = H-10 Load

DESIGN SPECIFICATIONS
LRFD Guide Specifications for Design of Pedestrian Bridges, 2nd Edition 2015

DESIGN STRESSES
FIELD UNITS
f'c = 4,000 psi (Superstructure)
f'c = 3,500 psi (Substructure)
fy = 60,000 psi (Reinforcement)
fy = 50,000 psi (M270 Grade 50W)

SEISMIC DATA
Seismic Performance Zone (SPZ) = 1
Design Spectral Acceleration at 1.0 sec. (SD1) = 0.074
Design Spectral Acceleration at 0.2 sec. (SDS) = 0.12
Soil Site Class = C

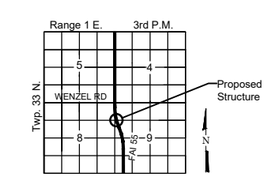

LOCATION SKETCH

SHEET 18 OF 76 BRIDGE SHEETS

"CONTRACT NO. 87876"

DRAWN BY: NV	REVISIONS			
CHECKED BY: JKC	LEVEL	BY	DATE	DESCRIPTION
DATE: 7/2023				

Chamlin & Associates

PERU MORRIS
OTTAWA MENDOTA
ILLINOIS

PERU ITEP SHARED USE PATH PROJECT
SECTION 23-00073-00-BT
LASALLE COUNTY

GENERAL PLAN - UNIT 2
SN 050-7500

CONSTRUCTION PLANS

CURRENT AS OF: 12/20/2024		
SCALE: AS NOTED	SHEET 74	
FILE NO.: 66437.00 Y-	OF 183	

UNIT 2 GENERAL NOTES

Reinforcement bars designated (E) shall be epoxy coated.

No field welding is permitted except as specified in the contract plans.

Fasteners shall be ASTM F3125 Grade A325 Type 3 weathering steel bolts.
Bolts ¾" dia., 7/8" dia. Holes, unless otherwise noted.

The prefabricated pedestrian truss shall not be painted.

Pedestrian Truss Superstructure shall be paid for per square foot. Measurement shall be for end to end of deck for each span and shall be x 12'-0" clear width.

- Span 7 = 914 square feet
- Span 8 = 914 square feet
- Span 9 = 938 square feet

Truss manufacturer shall camber the truss as necessary to provide allowance for dead load deflections.

Truss manufacturer shall provide the reinforced concrete deck design utilizing stay-in-place galvanized forms. Reinforcement shall be epoxy coated. Contractor shall place the concrete deck after truss is set. Cost included with Pedestrian Truss Superstructure.

The piers have been designed per AASHTO LRFD and based upon truss dead loads (including deck) shown below:

- Total superstructure dead load
  - Span 7 / Pier 6 = 48,000 pounds
  - Span 7 / Pier 7 = 48,000 pounds
  - Span 8 / Pier 7 = 48,000 pounds
  - Span 8 / Pier 8 = 48,000 pounds
  - Span 9 / Pier 8 = 49,000 pounds
  - Span 9 / Pier 9 = 49,000 pounds
- Superstructure transverse wind load reaction
  - Span 7 / Pier 6 = 17,200 pounds
  - Span 7 / Pier 7 = 17,200 pounds
  - Span 8 / Pier 7 = 17,200 pounds
  - Span 8 / Pier 8 = 17,200 pounds
  - Span 9 / Pier 8 = 17,200 pounds
  - Span 9 / Pier 9 = 17,200 pounds

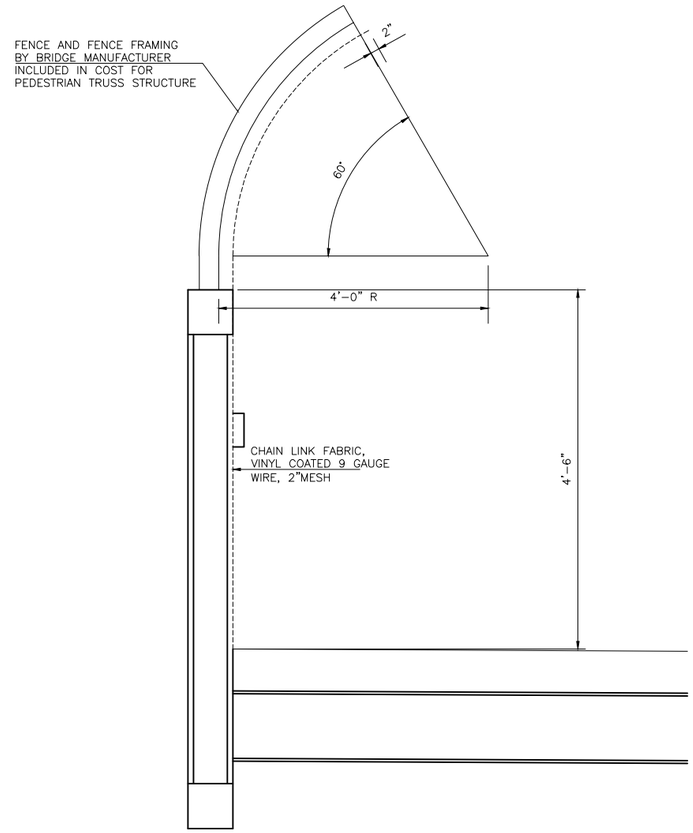

TYPICAL FENCE DETAIL

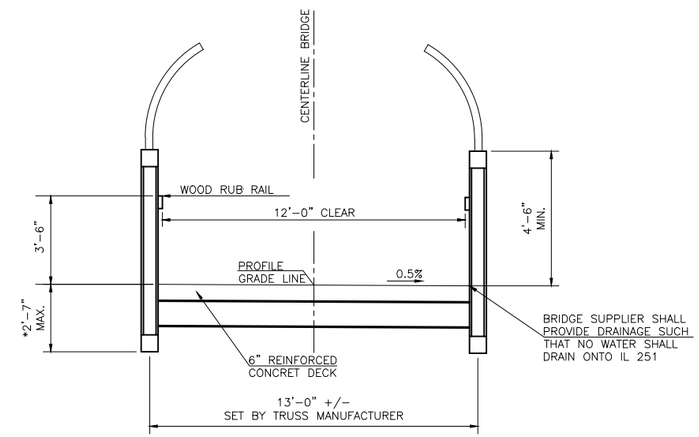

SECTION THROUGH STEEL TRUSS SPANS

DRAWN BY: NV	REVISIONS			
CHECKED BY: JKC	LEVEL	BY	DATE	DESCRIPTION
DATE: 7/2023				

Chamlin & Associates

PERU MORRIS
OTTAWA MENDOTA
ILLINOIS

PERU ITEP SHARED USE PATH PROJECT
SECTION 23-00073-00-BT
LASALLE COUNTY

GENERAL DATA - UNIT 2
SN 050-7500

CONSTRUCTION PLANS

CURRENT AS OF: 12/20/2024	
SCALE: AS NOTED	SHEET 75
FILE NO.: 66437.00 Y-	OF 183

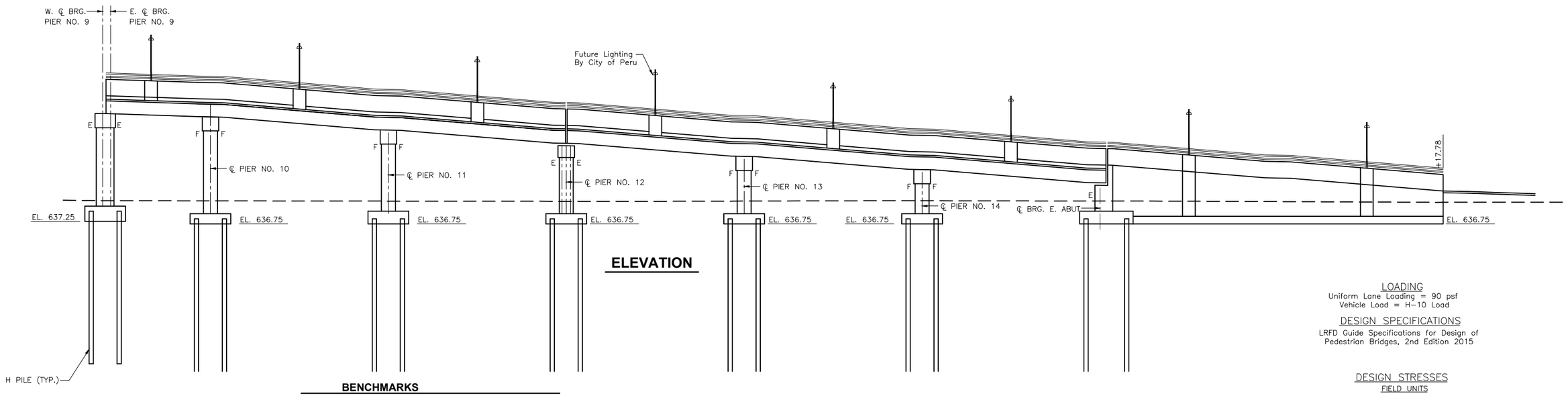

ELEVATION

BENCHMARKS

BM 52 CHISELED "X" ON CONCRETE BASE OF BARD OPTICAL SIGN FACING NORTH
ELEV.= 644.79

BM 53 CHISELED "X" ON CONCRETE BASE OF LIGHT POLE FACING NORTH, LOCATED IN NORTH EAST END OF LIBERTY VILLAGE PARKING LOT JUST SOUTH OF CROP LINE
ELEV.= 642.93

LOADING

Uniform Lane Loading = 90 psf
Vehicle Load = H-10 Load

DESIGN SPECIFICATIONS

LRFD Guide Specifications for Design of Pedestrian Bridges, 2nd Edition 2015

DESIGN STRESSES

FIELD UNITS

f'c = 4,000 psi (Superstructure)
f'c = 3,500 psi (Substructure)
fy = 60,000 psi (Reinforcement)

SEISMIC DATA

Seismic Performance Zone (SPZ) = 1
Design Spectral Acceleration at 1.0 sec. (SD1) = 0.074
Design Spectral Acceleration at 0.2 sec. (SDS) = 0.12
Soil Site Class = C

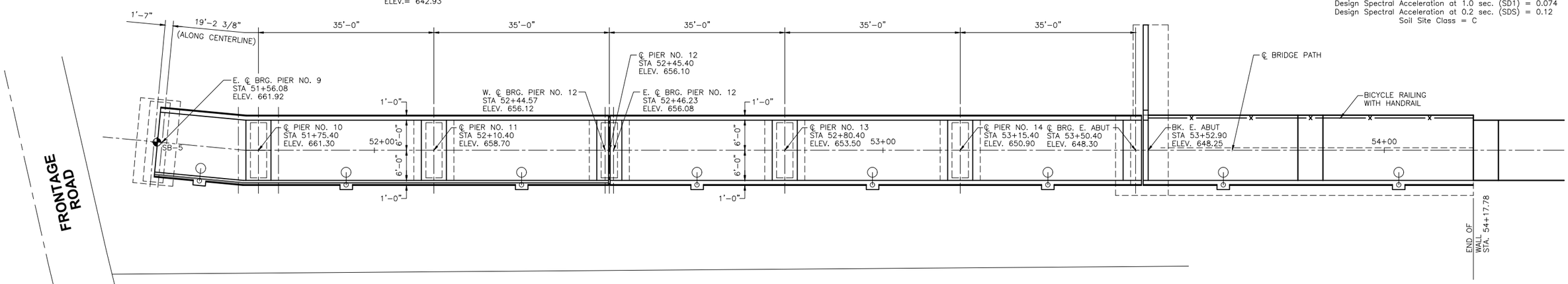

PLAN

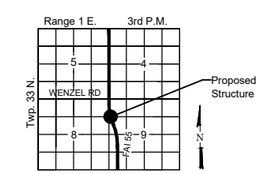

LOCATION SKETCH

SHEET 20 OF 76 BRIDGE SHEETS

"CONTRACT NO. 87876"

DRAWN BY: NV	REVISIONS			PERU MORRIS OTTAWA MENDOTA ILLINOIS	PERU ITEP SHARED USE PATH PROJECT SECTION 23-00073-00-BT LASALLE COUNTY	GENERAL PLAN - UNIT 3 SN 050-7500	CONSTRUCTION PLANS	CURRENT AS OF: 12/20/2024
CHECKED BY: JKC	LEVEL / BY / DATE / DESCRIPTION							SCALE: AS NOTED / SHEET 76
DATE: 7/2023								FILE NO.: 66437.00 Y- / OF 183

Chamlin & Associates

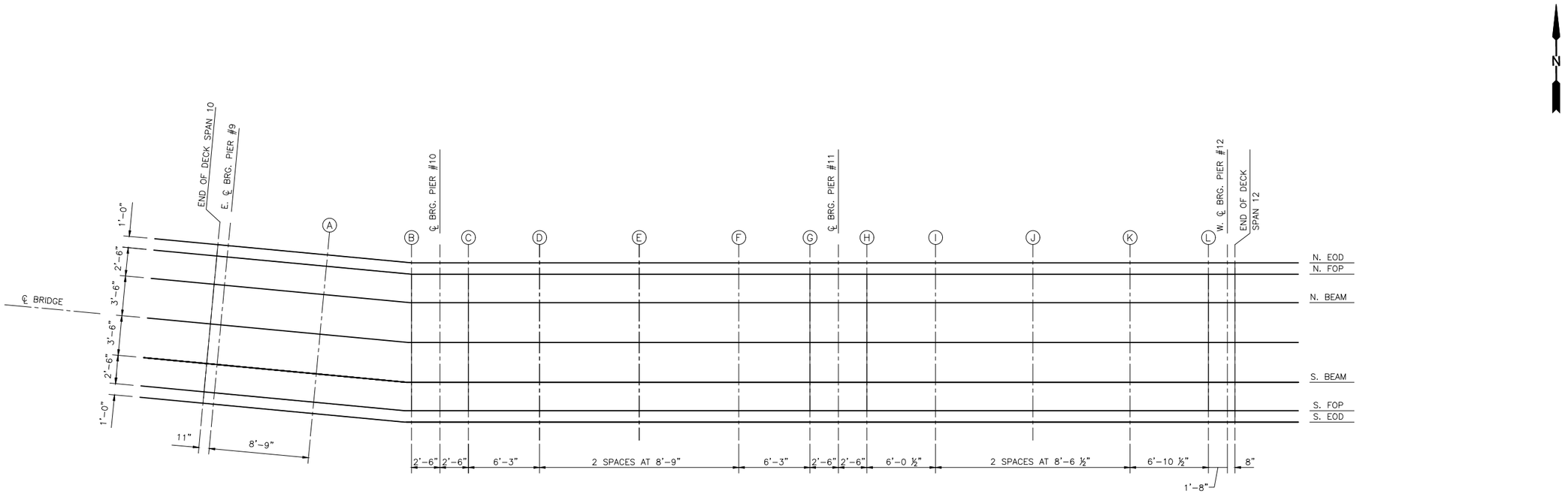

SPANS 10 - 12

EOD – EDGE OF DECK
FOP – FACE OF PARAPET

N. EOD

Location	Station	Offset	Theoretical Grade Elevations	Theoretical Grade Elevations Adjusted for Dead Load Deflections
END OF DECK SPAN 10	51+55.16	-7.00	661.98	661.98
E CL. BRG PIER 9	51+56.08	-7.00	661.95	661.95
A	51+64.83	-7.00	661.65	661.65
B	51+72.90	-7.00	661.38	661.38
CL.BRG PIER #10	51+75.40	-7.00	661.33	661.33
C	51+77.90	-7.00	661.28	661.29
D	51+84.15	-7.00	660.76	660.78
E	51+92.90	-7.00	660.03	660.05
F	52+01.65	-7.00	659.30	659.31
G	52+07.90	-7.00	658.78	658.78
CL. BRG. PIER #11	52+10.40	-7.00	658.73	658.73
H	52+12.90	-7.00	658.68	658.68
I	52+18.94	-7.00	658.18	658.21
J	52+27.48	-7.00	657.46	657.51
K	52+36.03	-7.00	656.75	656.79
Location	52+42.90	-7.00	656.18	656.19
W CL. BRG PIER #12	52+44.57	-7.00	656.15	656.15
END OF DECK SPAN 12	52+45.24	-7.00	656.13	656.13

N. FOP

Location	Station	Offset	Theoretical Grade Elevations	Theoretical Grade Elevations Adjusted for Dead Load Deflections
END OF DECK SPAN 10	51+55.16	-6.00	661.98	661.98
E CL. BRG PIER 9	51+56.08	-6.00	661.95	661.95
A	51+64.83	-6.00	661.65	661.65
B	51+72.90	-6.00	661.38	661.38
CL.BRG PIER #10	51+75.40	-6.00	661.33	661.33
C	51+77.90	-6.00	661.28	661.29
D	51+84.15	-6.00	660.76	660.78
E	51+92.90	-6.00	660.03	660.05
F	52+01.65	-6.00	659.30	659.31
G	52+07.90	-6.00	658.78	658.78
CL. BRG. PIER #11	52+10.40	-6.00	658.73	658.73
H	52+12.90	-6.00	658.68	658.68
I	52+18.94	-6.00	658.18	658.21
J	52+27.48	-6.00	657.46	657.51
K	52+36.03	-6.00	656.75	656.79
Location	52+42.90	-6.00	656.18	656.19
W CL. BRG PIER #12	52+44.57	-6.00	656.15	656.15
END OF DECK SPAN 12	52+45.24	-6.00	656.13	656.13

N. BEAM

Location	Station	Offset	Theoretical Grade Elevations	Theoretical Grade Elevations Adjusted for Dead Load Deflections
END OF DECK SPAN 10	51+55.16	-3.50	661.97	661.97
E CL. BRG PIER 9	51+56.08	-3.50	661.94	661.94
A	51+64.83	-3.50	661.64	661.64
B	51+72.90	-3.50	661.37	661.37
CL.BRG PIER #10	51+75.40	-3.50	661.32	661.32
C	51+77.90	-3.50	661.27	661.28
D	51+84.15	-3.50	660.75	660.77
E	51+92.90	-3.50	660.02	660.04
F	52+01.65	-3.50	659.29	659.30
G	52+07.90	-3.50	658.77	658.77
CL. BRG. PIER #11	52+10.40	-3.50	658.72	658.72
H	52+12.90	-3.50	658.67	658.67
I	52+18.94	-3.50	658.17	658.20
J	52+27.48	-3.50	657.45	657.50
K	52+36.03	-3.50	656.74	656.78
Location	52+42.90	-3.50	656.17	656.18
W CL. BRG PIER #12	52+44.57	-3.50	656.14	656.14
END OF DECK SPAN 12	52+45.24	-3.50	656.12	656.12

CL. BRIDGE

Location	Station	Offset	Theoretical Grade Elevations	Theoretical Grade Elevations Adjusted for Dead Load Deflections
END OF DECK SPAN 10	51+55.16	0.00	661.95	661.95
E CL. BRG PIER 9	51+56.08	0.00	661.92	661.92
A	51+64.83	0.00	661.62	661.62
B	51+72.90	0.00	661.35	661.35
CL.BRG PIER #10	51+75.40	0.00	661.30	661.30
C	51+77.90	0.00	661.25	661.26
D	51+84.15	0.00	660.73	660.75
E	51+92.90	0.00	660.00	660.02
F	52+01.65	0.00	659.27	659.28
G	52+07.90	0.00	658.75	658.75
CL. BRG. PIER #11	52+10.40	0.00	658.70	658.70
H	52+12.90	0.00	658.65	658.65
I	52+18.94	0.00	658.15	658.18
J	52+27.48	0.00	657.43	657.48
K	52+36.03	0.00	656.72	656.76
L	52+42.90	0.00	656.15	656.16
W CL. BRG PIER #12	52+44.57	0.00	656.12	656.12
END OF DECK SPAN 12	52+45.24	0.00	656.10	656.10

SHEET 21 OF 76 BRIDGE SHEETS

"CONTRACT NO. 87876"

DRAWN BY: DS
CHECKED BY: JKC
DATE: 11/01/23

REVISIONS

LEVEL	BY	DATE	DESCRIPTION

Chamlin & Associates

PERU MORRIS
OTTAWA MENDOTA
ILLINOIS

PERU ITEP SHARED USE PATH PROJECT
SECTION 23-00073-00-BT
LASALLE COUNTY

TOP OF DECK ELEVATIONS - UNIT 3

CONSTRUCTION PLANS

CURRENT AS OF: 12/20/2024
SCALE: AS NOTED
SHEET 77
FILE NO.: 66437.00 Y-
OF 183

S. BEAM

Location	Station	Offset	Theoretical Grade Elevations	Theoretical Grade Elevations Adjusted for Dead Load Deflections
END OF DECK SPAN 10	51+55.16	3.50	661.93	661.93
E CL. BRG PIER 9	51+56.08	3.50	661.90	661.90
A	51+64.83	3.50	661.60	661.60
B	51+72.90	3.50	661.33	661.33
CL.BRG PIER #10	51+75.40	3.50	661.28	661.28
C	51+77.90	3.50	661.23	661.23
D	51+84.15	3.50	660.71	660.73
E	51+92.90	3.50	659.98	660.00
F	52+01.65	3.50	659.25	659.26
G	52+07.90	3.50	658.73	658.73
CL. BRG. PIER #11	52+10.40	3.50	658.68	658.68
H	52+12.90	3.50	658.63	658.63
I	52+18.94	3.50	658.13	658.16
J	52+27.48	3.50	657.41	657.46
K	52+36.03	3.50	656.70	656.74
Location	52+42.90	3.50	656.13	656.14
W CL. BRG PIER #12	52+44.57	3.50	656.10	656.10
END OF DECK SPAN 12	52+45.24	3.50	656.08	656.08

S. FOP

Location	Station	Offset	Theoretical Grade Elevations	Theoretical Grade Elevations Adjusted for Dead Load Deflections
END OF DECK SPAN 10	51+55.16	6.00	661.92	661.92
E CL. BRG PIER 9	51+56.08	6.00	661.89	661.89
A	51+64.83	6.00	661.59	661.59
B	51+72.90	6.00	661.32	661.32
CL.BRG PIER #10	51+75.40	6.00	661.27	661.27
C	51+77.90	6.00	661.22	661.22
D	51+84.15	6.00	660.70	660.72
E	51+92.90	6.00	659.97	659.99
F	52+01.65	6.00	659.24	659.25
G	52+07.90	6.00	658.72	658.72
CL. BRG. PIER #11	52+10.40	6.00	658.67	658.67
H	52+12.90	6.00	658.62	658.62
I	52+18.94	6.00	658.12	658.15
J	52+27.48	6.00	657.40	657.45
K	52+36.03	6.00	656.69	656.73
Location	52+42.90	6.00	656.12	656.13
W CL. BRG PIER #12	52+44.57	6.00	656.09	656.09
END OF DECK SPAN 12	52+45.24	6.00	656.07	656.07

S. EOD

Location	Station	Offset	Theoretical Grade Elevations	Theoretical Grade Elevations Adjusted for Dead Load Deflections
END OF DECK SPAN 10	51+55.16	7.00	661.92	661.92
E CL. BRG PIER 9	51+56.08	7.00	661.89	661.89
A	51+64.83	7.00	661.59	661.59
B	51+72.90	7.00	661.32	661.32
CL.BRG PIER #10	51+75.40	7.00	661.27	661.27
C	51+77.90	7.00	661.22	661.22
D	51+84.15	7.00	660.70	660.72
E	51+92.90	7.00	659.97	659.99
F	52+01.65	7.00	659.24	659.25
G	52+07.90	7.00	658.72	658.72
CL. BRG. PIER #11	52+10.40	7.00	658.67	658.67
H	52+12.90	7.00	658.62	658.62
I	52+18.94	7.00	658.12	658.15
J	52+27.48	7.00	657.40	657.45
K	52+36.03	7.00	656.69	656.73
Location	52+42.90	7.00	656.12	656.13
W CL. BRG PIER #12	52+44.57	7.00	656.09	656.09
END OF DECK SPAN 12	52+45.24	7.00	656.07	656.07

SHEET 22 OF 76 BRIDGE SHEETS

"CONTRACT NO. 87876"

DRAWN BY: DS
CHECKED BY: JKC
DATE: 11/01/23

REVISIONS			
LEVEL	BY	DATE	DESCRIPTION

Chamlin & Associates

PERU MORRIS
OTTAWA MENDOTA
ILLINOIS

PERU ITEP SHARED USE PATH PROJECT
SECTION 23-00073-00-BT
LASALLE COUNTY

TOP OF DECK ELEVATIONS - UNIT 3

CONSTRUCTION PLANS

CURRENT AS OF: 12/20/2024
SCALE: AS NOTED
SHEET 78
FILE NO.: 66437.00 Y-
OF 183

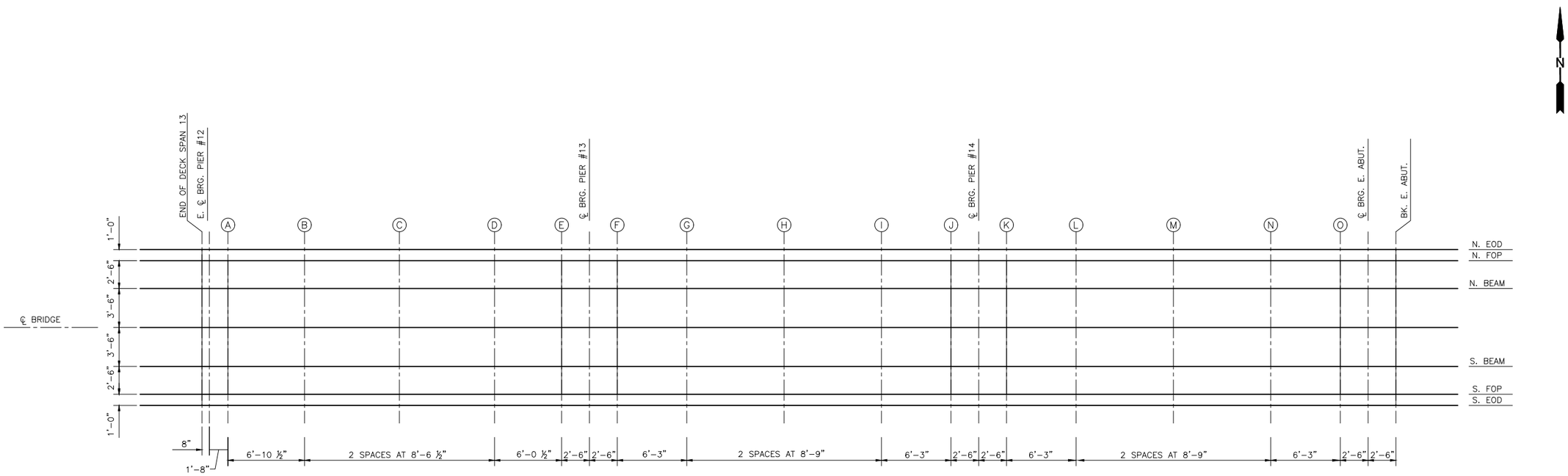

SPANS 13 - 15

EOD – EDGE OF DECK
FOP – FACE OF PARAPET

N. EOD

Location	Station	Offset	Theoretical Grade Elevations	Theoretical Grade Elevations Adjusted for Dead Load Deflections
END OF DECK SPAN 13	52+45.56	-7.00	656.13	656.13
E CL. BRG PIER 12	52+46.23	-7.00	656.11	656.11
A	52+47.90	-7.00	656.08	656.09
B	52+54.77	-7.00	655.51	655.56
C	52+63.31	-7.00	654.80	654.86
D	52+71.86	-7.00	654.08	654.11
E	52+77.90	-7.00	653.58	653.59
CL.BRG PIER #13	52+80.40	-7.00	653.53	653.53
F	52+82.90	-7.00	653.48	653.48
G	52+89.15	-7.00	652.95	652.95
H	52+97.90	-7.00	652.23	652.24
I	53+06.65	-7.00	651.50	651.50
J	53+12.90	-7.00	650.98	650.98
CL. BRG. PIER #14	53+15.40	-7.00	650.93	650.93
K	53+17.90	-7.00	650.88	650.88
L	53+24.15	-7.00	650.36	650.40
M	53+32.90	-7.00	649.63	649.69
N	53+41.65	-7.00	648.90	648.95
O	53+47.90	-7.00	648.38	648.40
CL. BRG E. ABUT	53+50.40	-7.00	648.33	648.33
BK. E. ABUT	53+52.90	-7.00	649.28	649.28

N. FOP

Location	Station	Offset	Theoretical Grade Elevations	Theoretical Grade Elevations Adjusted for Dead Load Deflections
END OF DECK SPAN 13	52+45.56	-6.00	656.13	656.13
E CL. BRG PIER 12	52+46.23	-6.00	656.11	656.11
A	52+47.90	-6.00	656.08	656.09
B	52+54.77	-6.00	655.51	655.56
C	52+63.31	-6.00	654.80	654.86
D	52+71.86	-6.00	654.08	654.11
E	52+77.90	-6.00	653.58	653.59
CL.BRG PIER #13	52+80.40	-6.00	653.53	653.53
F	52+82.90	-6.00	653.48	653.48
G	52+89.15	-6.00	652.95	652.95
H	52+97.90	-6.00	652.23	652.24
I	53+06.65	-6.00	651.50	651.50
J	53+12.90	-6.00	650.98	650.98
CL. BRG. PIER #14	53+15.40	-6.00	650.93	650.93
K	53+17.90	-6.00	650.88	650.88
L	53+24.15	-6.00	650.36	650.40
M	53+32.90	-6.00	649.63	649.69
N	53+41.65	-6.00	648.90	648.95
O	53+47.90	-6.00	648.38	648.40
CL. BRG E. ABUT	53+50.40	-6.00	648.33	648.33
BK. E. ABUT	53+52.90	-6.00	649.28	649.28

N. BEAM

Location	Station	Offset	Theoretical Grade Elevations	Theoretical Grade Elevations Adjusted for Dead Load Deflections
END OF DECK SPAN 13	52+45.56	-3.50	656.12	656.12
E CL. BRG PIER 12	52+46.23	-3.50	656.10	656.10
A	52+47.90	-3.50	656.07	656.08
B	52+54.77	-3.50	655.50	655.55
C	52+63.31	-3.50	654.79	654.85
D	52+71.86	-3.50	654.07	654.10
E	52+77.90	-3.50	653.57	653.58
CL.BRG PIER #13	52+80.40	-3.50	653.52	653.52
F	52+82.90	-3.50	653.47	653.47
G	52+89.15	-3.50	652.94	652.94
H	52+97.90	-3.50	652.22	652.23
I	53+06.65	-3.50	651.49	651.49
J	53+12.90	-3.50	650.97	650.97
CL. BRG. PIER #14	53+15.40	-3.50	650.92	650.92
K	53+17.90	-3.50	650.87	650.87
L	53+24.15	-3.50	650.35	650.39
M	53+32.90	-3.50	649.62	649.68
N	53+41.65	-3.50	648.89	648.94
O	53+47.90	-3.50	648.37	648.39
CL. BRG E. ABUT	53+50.40	-3.50	648.32	648.32
BK. E. ABUT	53+52.90	-3.50	649.27	649.27

CL. BRIDGE

Location	Station	Offset	Theoretical Grade Elevations	Theoretical Grade Elevations Adjusted for Dead Load Deflections
END OF DECK SPAN 13	52+45.56	0.00	656.10	656.10
E CL. BRG PIER 12	52+46.23	0.00	656.08	656.08
A	52+47.90	0.00	656.05	656.06
B	52+54.77	0.00	655.48	655.53
C	52+63.31	0.00	654.77	654.83
D	52+71.86	0.00	654.05	654.08
E	52+77.90	0.00	653.55	653.56
CL.BRG PIER #13	52+80.40	0.00	653.50	653.50
F	52+82.90	0.00	653.45	653.45
G	52+89.15	0.00	652.92	652.92
H	52+97.90	0.00	652.20	652.21
I	53+06.65	0.00	651.47	651.47
J	53+12.90	0.00	650.95	650.95
CL. BRG. PIER #14	53+15.40	0.00	650.90	650.90
K	53+17.90	0.00	650.85	650.85
L	53+24.15	0.00	650.33	650.37
M	53+32.90	0.00	649.60	649.66
N	53+41.65	0.00	648.87	648.92
O	53+47.90	0.00	648.35	648.37
CL. BRG E. ABUT	53+50.40	0.00	648.30	648.30
BK. E. ABUT	53+52.90	0.00	649.25	649.25

SHEET 23 OF 76 BRIDGE SHEETS

"CONTRACT NO. 87876"

DRAWN BY: DS
CHECKED BY: JKC
DATE: 11/01/23

REVISIONS

LEVEL	BY	DATE	DESCRIPTION

Chamlin & Associates

PERU MORRIS
OTTAWA MENDOTA
ILLINOIS

PERU ITEP SHARED USE PATH PROJECT
SECTION 23-00073-00-BT
LASALLE COUNTY

TOP OF DECK ELEVATIONS - UNIT 3

CONSTRUCTION PLANS

CURRENT AS OF: 12/20/2024
SCALE: AS NOTED
FILE NO.: 66437.00 Y–
SHEET 79 OF 183

S. BEAM				
Location	Station	Offset	Theoretical Grade Elevations	Theoretical Grade Elevations Adjusted for Dead Load Deflections
END OF DECK SPAN 13	52+45.56	3.50	656.08	656.08
E CL. BRG PIER 12	52+46.23	3.50	656.06	656.06
A	52+47.90	3.50	656.03	656.04
B	52+54.77	3.50	655.46	655.51
C	52+63.31	3.50	654.75	654.81
D	52+71.86	3.50	654.03	654.06
E	52+77.90	3.50	653.53	653.54
CL.BRG PIER #13	52+80.40	3.50	653.48	653.48
F	52+82.90	3.50	653.43	653.43
G	52+89.15	3.50	652.90	652.90
H	52+97.90	3.50	652.18	652.19
I	53+06.65	3.50	651.45	651.45
J	53+12.90	3.50	650.93	650.93
CL. BRG. PIER #14	53+15.40	3.50	650.88	650.88
K	53+17.90	3.50	650.83	650.83
L	53+24.15	3.50	650.31	650.35
M	53+32.90	3.50	649.58	649.64
N	53+41.65	3.50	648.85	648.90
O	53+47.90	3.50	648.33	648.35
CL. BRG E. ABUT	53+50.40	3.50	648.28	648.28
BK. E. ABUT	53+52.90	3.50	649.23	649.23

S. FOP				
Location	Station	Offset	Theoretical Grade Elevations	Theoretical Grade Elevations Adjusted for Dead Load Deflections
END OF DECK SPAN 13	52+45.56	6.00	656.07	656.07
E CL. BRG PIER 12	52+46.23	6.00	656.05	656.05
A	52+47.90	6.00	656.02	656.03
B	52+54.77	6.00	655.45	655.50
C	52+63.31	6.00	654.74	654.80
D	52+71.86	6.00	654.02	654.05
E	52+77.90	6.00	653.52	653.53
CL.BRG PIER #13	52+80.40	6.00	653.47	653.47
F	52+82.90	6.00	653.42	653.42
G	52+89.15	6.00	652.89	652.89
H	52+97.90	6.00	652.17	652.18
I	53+06.65	6.00	651.44	651.44
J	53+12.90	6.00	650.92	650.92
CL. BRG. PIER #14	53+15.40	6.00	650.87	650.87
K	53+17.90	6.00	650.82	650.82
L	53+24.15	6.00	650.30	650.34
M	53+32.90	6.00	649.57	649.63
N	53+41.65	6.00	648.84	648.89
O	53+47.90	6.00	648.32	648.34
CL. BRG E. ABUT	53+50.40	6.00	648.27	648.27
BK. E. ABUT	53+52.90	6.00	649.22	649.22

S. EOD				
Location	Station	Offset	Theoretical Grade Elevations	Theoretical Grade Elevations Adjusted for Dead Load Deflections
END OF DECK SPAN 13	52+45.56	7.00	656.07	656.07
E CL. BRG PIER 12	52+46.23	7.00	656.05	656.05
A	52+47.90	7.00	656.02	656.03
B	52+54.77	7.00	655.45	655.50
C	52+63.31	7.00	654.74	654.80
D	52+71.86	7.00	654.02	654.05
E	52+77.90	7.00	653.52	653.53
CL.BRG PIER #13	52+80.40	7.00	653.47	653.47
F	52+82.90	7.00	653.42	653.42
G	52+89.15	7.00	652.89	652.89
H	52+97.90	7.00	652.17	652.18
I	53+06.65	7.00	651.44	651.44
J	53+12.90	7.00	650.92	650.92
CL. BRG. PIER #14	53+15.40	7.00	650.87	650.87
K	53+17.90	7.00	650.82	650.82
L	53+24.15	7.00	650.30	650.34
M	53+32.90	7.00	649.57	649.63
N	53+41.65	7.00	648.84	648.89
O	53+47.90	7.00	648.32	648.34
CL. BRG E. ABUT	53+50.40	7.00	648.27	648.27
BK. E. ABUT	53+52.90	7.00	649.22	649.22

SHEET 24 OF 76 BRIDGE SHEETS

"CONTRACT NO. 87876"

DRAWN BY: DS
CHECKED BY: JKC
DATE: 11/01/23

REVISIONS

LEVEL	BY	DATE	DESCRIPTION

Chamlin & Associates

PERU MORRIS
OTTAWA MENDOTA
ILLINOIS

PERU ITEP SHARED USE PATH PROJECT
SECTION 23-00073-00-BT
LASALLE COUNTY

TOP OF DECK ELEVATIONS - UNIT 3

CONSTRUCTION PLANS

CURRENT AS OF: 12/20/2024
SCALE: AS NOTED
SHEET 80
FILE NO.: 66437.00 Y-
OF 183

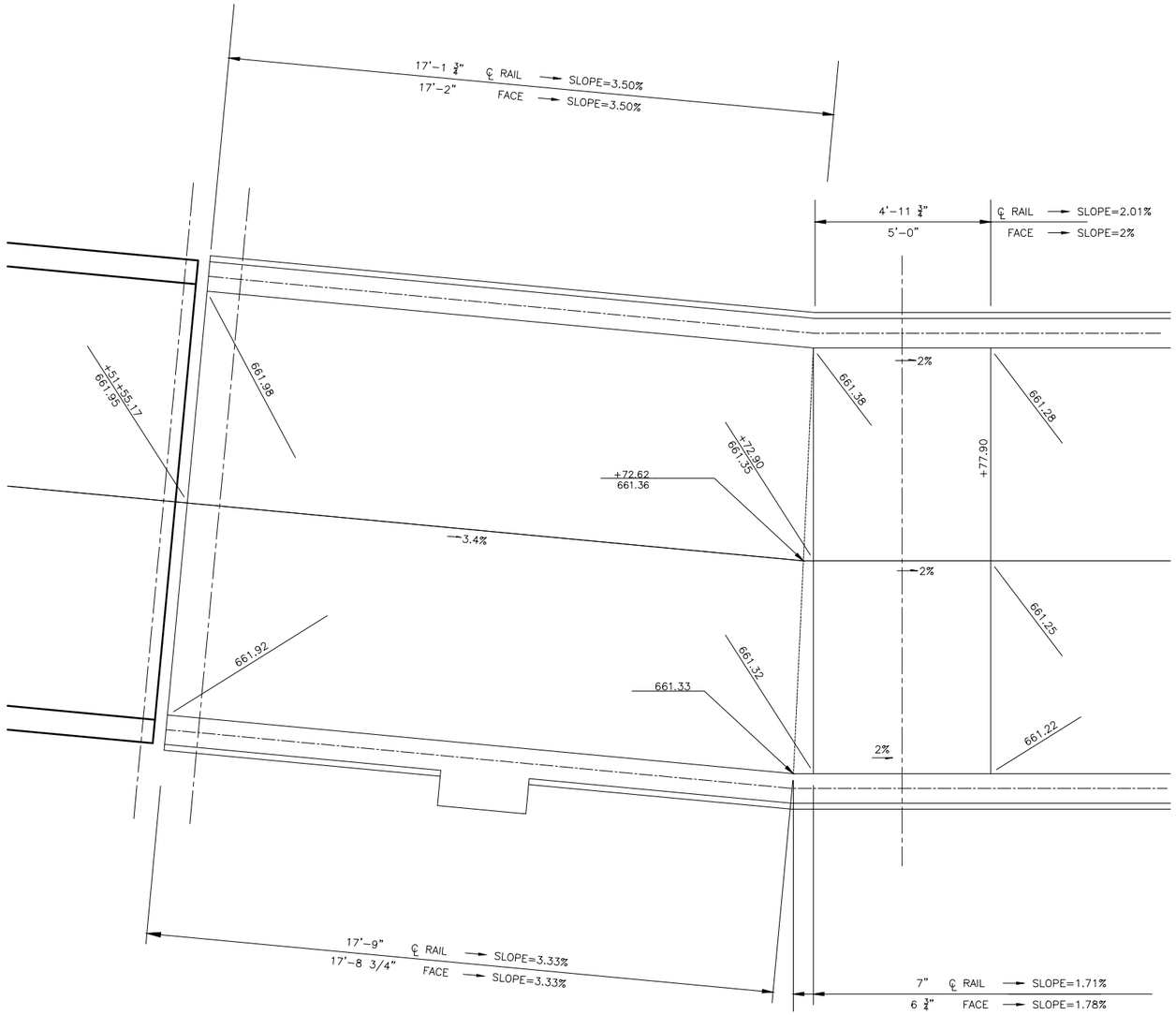

GRAPHIC SCALE
0 1 2
(IN FEET)

N

SHEET 25 OF 76 BRIDGE SHEETS "CONTRACT NO. 87876"

DRAWN BY: JJW	REVISIONS				
CHECKED BY: JKC	LEVEL	BY	DATE	DESCRIPTION	
DATE: 08/2023					

Chamlin & Associates

PERU MORRIS
OTTAWA MENDOTA
ILLINOIS

PERU ITEP SHARED USE PATH PROJECT
SECTION 23-00073-00-BT
LASALLE COUNTY

SPECIAL DECK ELEVATION DETAIL
UNIT 3
SN 050 7500

CONSTRUCTION PLANS

CURRENT AS OF: 12/20/2024		
SCALE: AS NOTED	SHEET 81	
FILE NO.: 66437.00 Y-	OF 183	

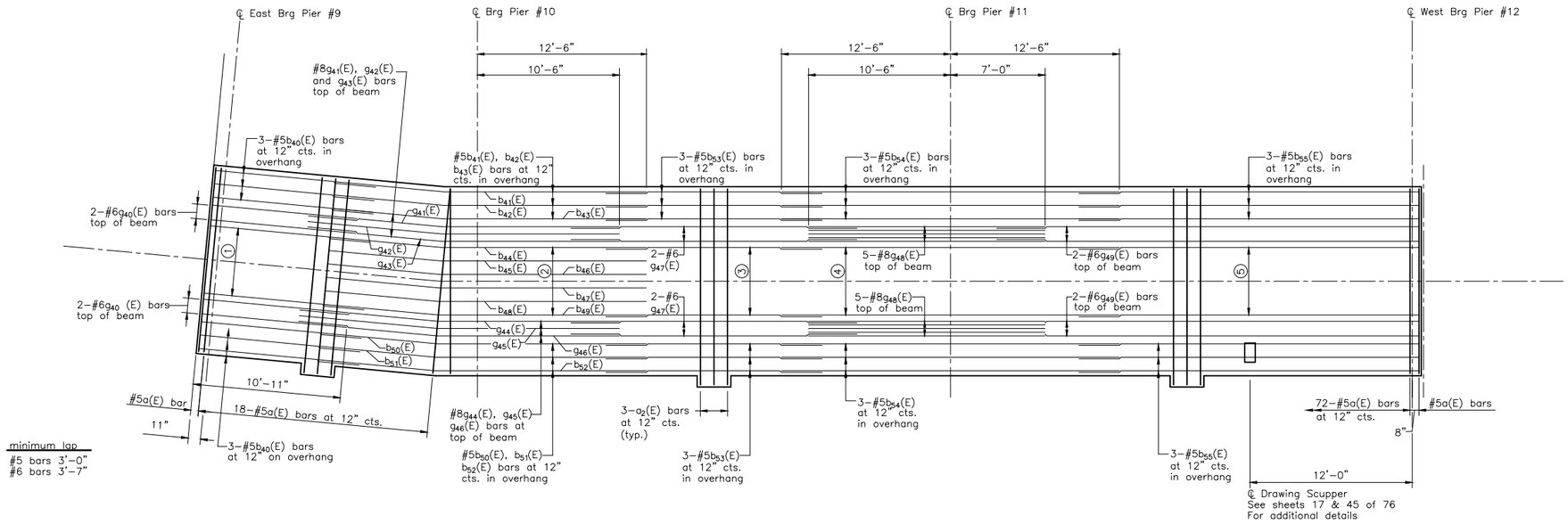

TOP REINFORCEMENT PLAN
(SPANS 10-12)

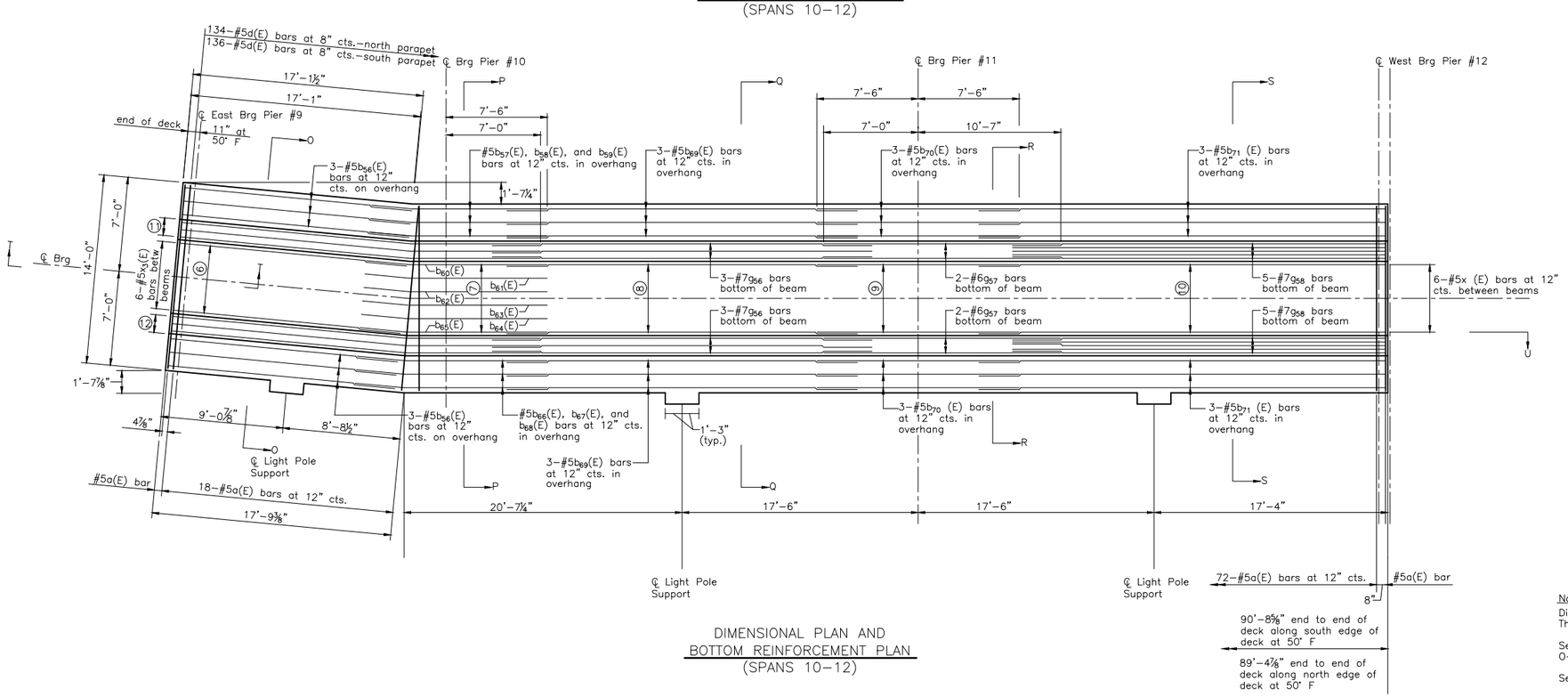

DIMENSIONAL PLAN AND
BOTTOM REINFORCEMENT PLAN
(SPANS 10-12)

1. 6-#5b40(E) bars at 12" cts. between beams
2. #5b44(E), b45(E), b46(E) b47(E), b48(E) and b49(E) bars at 12" cts. between beams
3. 6-#5b53(E) bars at 12" cts. between beams
4. 6-#5b54(E) bars at 12" cts. between beams
5. 6-#5b55(E) bars at 12" cts. between beams
6. 6-#5b56 (E) bars at 12" cts. between beams
7. #5b60(E), b61(E), b62(E) b63(E), b64(E) and b65(E) bars at 12" cts. between beams
8. 6-#5b69 (E) bars at 12" cts. between beams
9. 6-#5b70(E) bars at 12" cts. between beams
10. 6-#5b71(E) bars at 12" cts. between beams
11. #5g50(E), g51(E), g52(E) bottom of beam
12. #5g53(E), g54(E), g55(E) bottom of beam

Notes

Dimensions shown are horizontal
They are not along the slopes

See sheet 28 of 76 for Sections:
O-O, P-P, Q-Q, R-R, S-S & T-T

See sheet 27 of 76 for Beam Elevation View

Sheet 26 OF 76 Bridge Sheets

(Sheet 1 of 4) Contract 87876

DRAWN BY: LMP	REVISIONS			PERU MORRIS OTTAWA MENDOTA ILLINOIS	PERU ITEP SHARED USE PATH PROJECT SECTION 23-00073-00-BT LASALLE COUNTY	SUPERSTRUCTURE PLAN - UNIT 3 SPANS 10 - 12 SN 050-7500	CONSTRUCTION PLANS
CHECKED BY: JKC	LEVEL / BY / DATE / DESCRIPTION						CURRENT AS OF: 12/20/2024
DATE: 06/2023							SCALE: AS NOTED / SHEET 82
							FILE NO.: 66437.00 Y- / OF 183

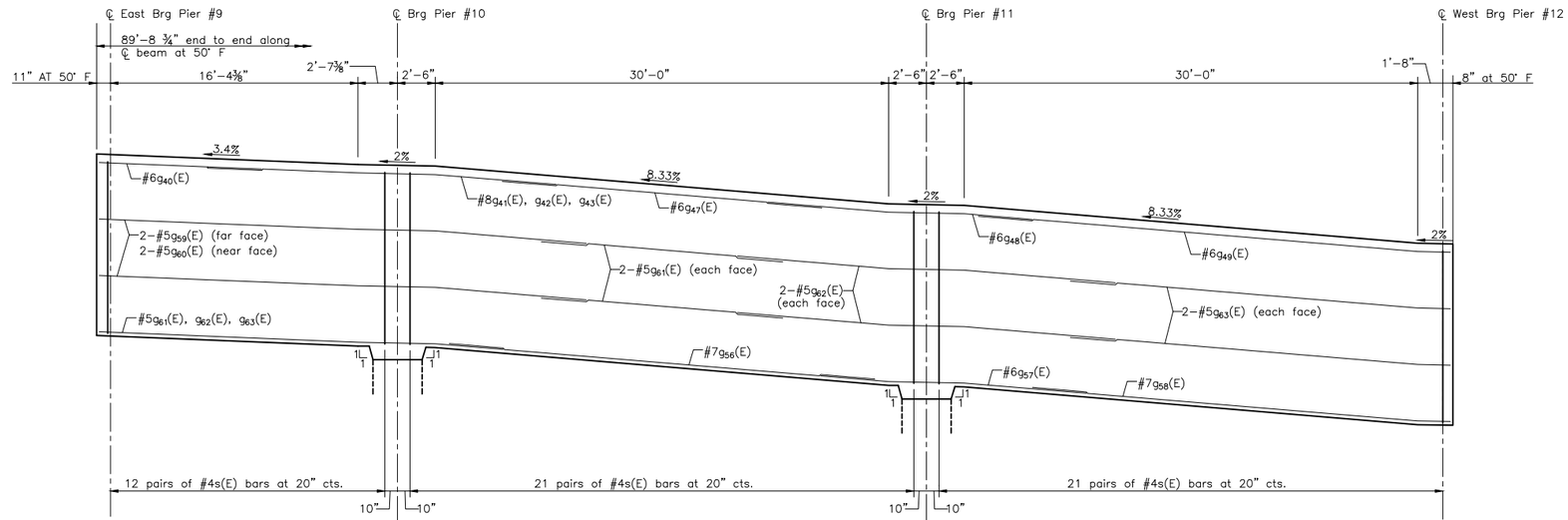

NORTH BEAM ELEVATION – LOOKING NORTH
(SPANS 10–12)

minimum laps
#5 bars 3'-0"
#6 bars 3'-7"

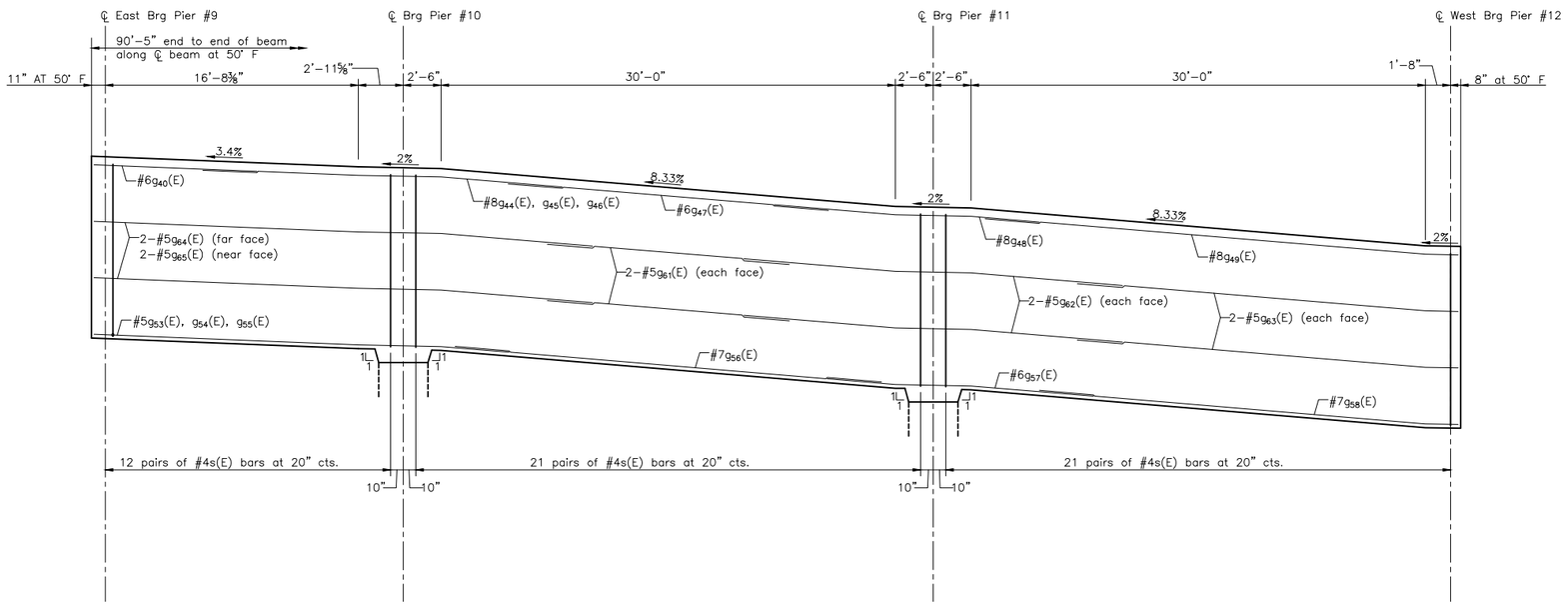

SOUTH BEAM ELEVATION – LOOKING NORTH
(SPANS 10–12)

BILL OF MATERIAL

Bar	No.	Size	Length	Shape
a (E)	184	5	13'-8"	
a_2(E)	9	5	14'-6"	
a_3(E)	8	5	8'-3"	
a_4(E)	12	5	1'-6"	
b_{40}(E)	12	5	11'-11"	
b_{41}(E)	1	5	23'-1"	
b_{42}(E)	1	5	23'-2"	
b_{43}(E)	1	5	23'-3"	
b_{44}(E)	1	5	23'-6"	
b_{45}(E)	1	5	23'-7"	
b_{46}(E)	1	5	23'-8"	
b_{47}(E)	1	5	23'-9"	
b_{48}(E)	1	5	23'-10"	
b_{49}(E)	1	5	23'-11"	
b_{50}(E)	1	5	24'-2"	
b_{51}(E)	1	5	24'-3"	
b_{52}(E)	1	5	24'-4"	
b_{53}(E)	12	5	16'-1"	
b_{54}(E)	12	5	25'-1"	
b_{55}(E)	12	5	25'-3"	
b_{56}(E)	12	5	16'-11"	
b_{57}(E)	1	5	13'-1"	
b_{58}(E)	1	5	13'-2"	
b_{59}(E)	1	5	13'-3"	
b_{60}(E)	1	5	13'-6"	
b_{61}(E)	1	5	13'-7"	
b_{62}(E)	1	5	13'-8"	
b_{63}(E)	1	5	13'-9"	
b_{64}(E)	1	5	13'-10"	
b_{65}(E)	1	5	13'-11"	
b_{66}(E)	1	5	14'-2"	
b_{67}(E)	1	5	14'-3"	
b_{68}(E)	1	5	14'-4"	
b_{69}(E)	12	5	26'-1"	
b_{70}(E)	12	5	15'-1"	
b_{71}(E)	12	5	30'-9"	
d(E)	270	5	6'-8"	
d_1(E)	270	5	8'-5"	
d_2(E)	9	6	4'-5"	
d_3(E)	18	6	8'-10"	
e_6(E)	24	4	11'-4"	
e_7(E)	36	4	11'-4"	
e_8(E)	12	4	11'-2"	
e_{11}(E)	8	4	34'-9"	
e_{12}(E)	8	4	34'-7"	
e_{20}(E)	6	4	14'-0"	
e_{21}(E)	6	4	5'-1"	
e_{22}(E)	6	4	6'-2"	
e_{23}(E)	6	4	13'-11"	
e_{24}(E)	4	4	19'-4"	
e_{25}(E)	4	4	20'-6"	
g_{40}(E)	4	6	10'-9"	
g_{41}(E)	1	8	23'-1"	
g_{42}(E)	1	8	23'-2"	
g_{43}(E)	1	8	23'-2"	
g_{44}(E)	1	8	23'-9"	
g_{45}(E)	1	8	23'-10"	
g_{46}(E)	1	8	23'-10"	
g_{47}(E)	4	6	21'-3"	
g_{48}(E)	10	8	21'-0"	
g_{49}(E)	4	6	31'-4"	
g_{50}(E)	1	5	26'-9"	
g_{51}(E)	1	5	26'-9"	
g_{52}(E)	1	5	26'-10"	
g_{53}(E)	1	5	27'-5"	
g_{54}(E)	1	5	27'-5"	
g_{55}(E)	1	5	27'-6"	
g_{56}(E)	6	7	28'-3"	
g_{57}(E)	4	6	17'-8"	
g_{58}(E)	10	7	27'-9"	
g_{59}(E)	2	5	32'-3"	
g_{60}(E)	2	5	32'-4"	
g_{61}(E)	8	5	16'-1"	
g_{62}(E)	8	5	25'-1"	
g_{63}(E)	8	5	25'-3"	
g_{64}(E)	2	5	32'-11"	
g_{65}(E)	2	5	33'-0"	
s(E)	216	4	7'-7"	
x(E)	6	5	6'-11"	
x_3(E)	6	5	6'-11"	

Concrete Superstructure	Cu. Yd.	82.0
Reinforcement Bars, Epoxy Coated	Pound	15,640
Rubbed Finish	Sq. Ft.	1,348

Sheet 27 of 76 Bridge Sheets

(Sheet 2 of 4) Contract 87876

DRAWN BY: LMP	REVISIONS			
CHECKED BY: JKC	LEVEL	BY	DATE	DESCRIPTION
DATE: 06/2023				

Chamlin & Associates

PERU MORRIS
OTTAWA MENDOTA
ILLINOIS

PERU ITEP SHARED USE PATH PROJECT
SECTION 23-00073-00-BT
LASALLE COUNTY

SUPERSTRUCTURE DETAILS - UNIT 3
SPANS 10 - 12
SN 050-7500

CONSTRUCTION PLANS

CURRENT AS OF: 12/20/2024
SCALE: AS NOTED
SHEET 83
FILE NO.: 66437.00 Y–
OF 183

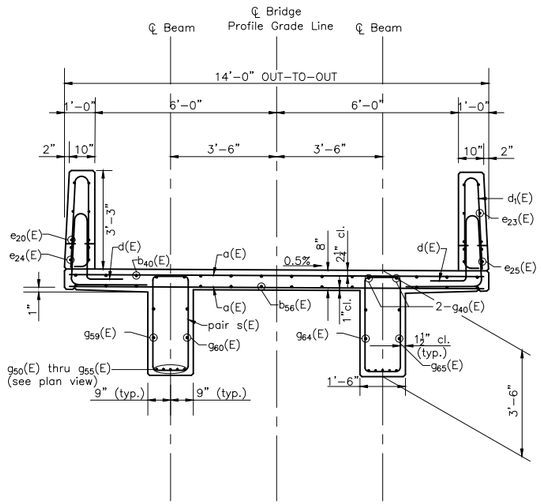

SECTION O-O

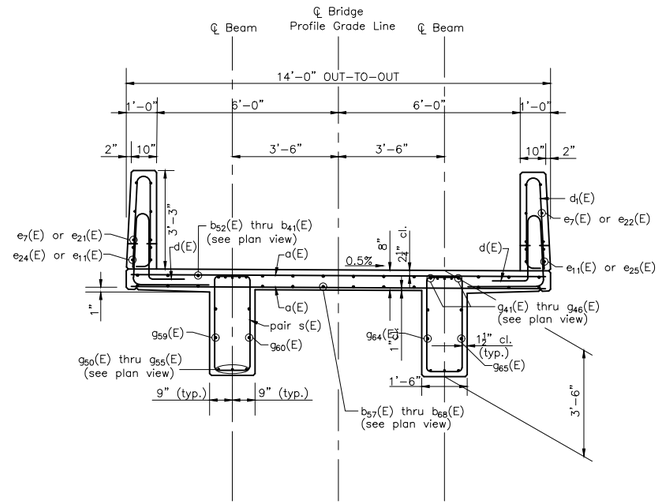

SECTION P-P

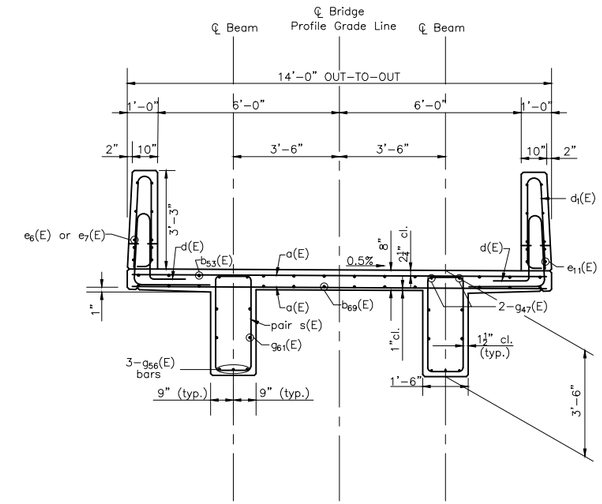

SECTION Q-Q

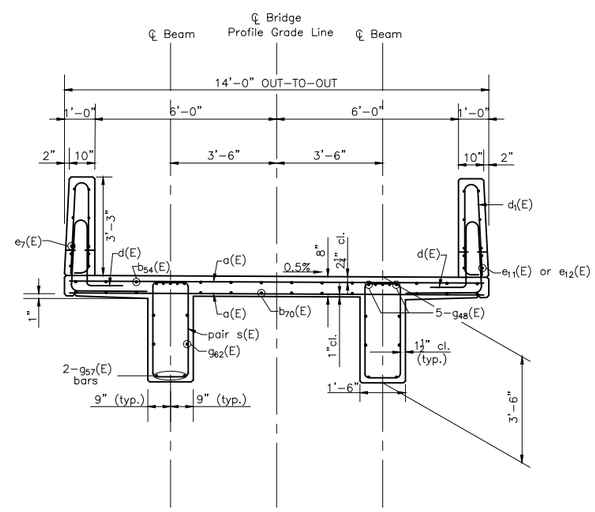

SECTION R-R

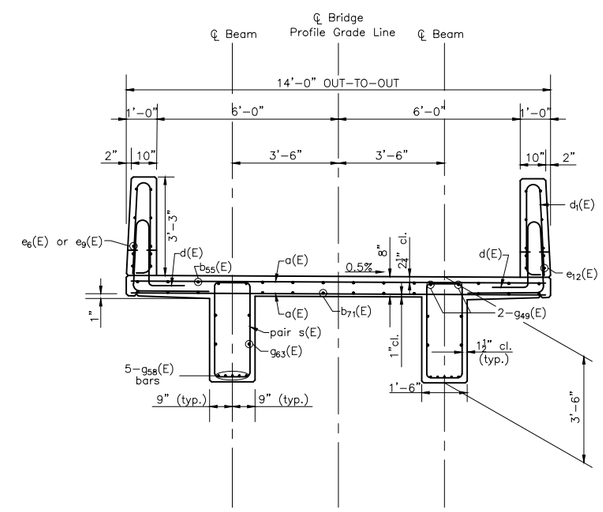

SECTION S-S

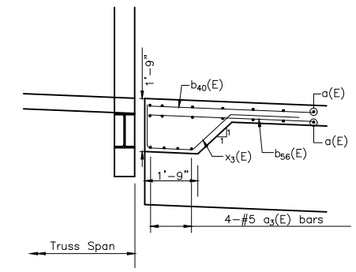

SECTION T-T

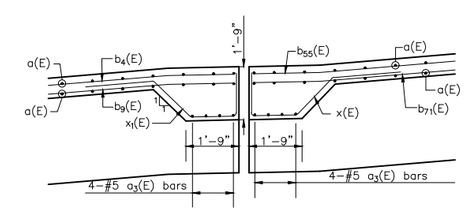

SECTION U

DRAWN BY: LMP	REVISIONS			
CHECKED BY: JKC	LEVEL	BY	DATE	DESCRIPTION
DATE: 06/2023				

Chamlin & Associates

PERU MORRIS
OTTAWA MENDOTA
ILLINOIS

PERU ITEP SHARED USE PATH PROJECT
SECTION 23-00073-00-BT
LASALLE COUNTY

SUPERSTRUCTURE DETAILS - UNIT 3
SPANS 10 - 12
SN 050-7500

CONSTRUCTION PLANS

CURRENT AS OF: 12/20/2024			
SCALE: AS NOTED	SHEET 84		
FILE NO.: 66437.00 Y-	OF 183		

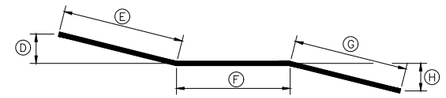

ELEVATION VIEW

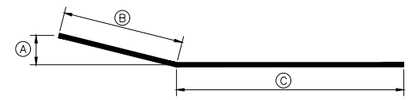

PLAN VIEW

BAR b_{41}(E) thru b_{52}(E) , b_{57}(E), thru b_{68}(E), g_{41}(E) thru g_{46}(E), g_{50}(E) thru g_{55}(E), g_{59}(E), g_{60}(E), g_{64}(E) and g_{65}(E)

Bar	A	B	C	D	E	F	G	H
b_{41}(E)	9"	8'-0 3/4"	14'-11 5/8"	1 7/8"	8'-0 3/4"	4'-11 5/8"	10'-0 1/2"	7 5/8
b_{42}(E)	9 1/8"	8'-1 3/8"	15'-0 1/4"	2"	8'-1 3/8"	5'-0 1/4"	10'-0 1/2"	7 5/8"
b_{43}(E)	9 1/8"	8'-1 7/8"	15'-0 3/4"	2"	8'-1 7/8"	5'-0 3/4"	10'-0 1/2"	7 5/8"
b_{44}(E)	9 1/4"	8'-3 1/8"	15'-2"	2"	8'-3 1/8"	5'-2"	10'-0 1/2"	7 5/8"
b_{45}(E)	9 1/4"	8'-3 5/8"	15'-2 1/2"	2"	8'-3 5/8"	5'-2 1/2"	10'-0 1/2"	7 5/8"
b_{46}(E)	9 3/8"	8'-4 1/4"	15'-3 1/4"	2"	8'-4 1/4"	5'-3 1/4"	10'-0 1/2"	7 5/8"
b_{47}(E)	9 3/8"	8'-4 3/4"	15'-3 5/8"	2"	8'-4 3/4"	5'-3 5/8"	10'-0 1/2"	7 5/8"
b_{48}(E)	9 1/2"	8'-5 3/8"	15'-4 1/4"	2"	8'-5 3/8"	5'-4 1/4"	10'-0 1/2"	7 5/8"
b_{49}(E)	9 1/2"	8'-5 7/8"	15'-4 3/4"	2"	8'-5 7/8"	5'-4 3/4"	10'-0 1/2"	7 5/8"
b_{50}(E)	9 5/8"	8'-7 1/8"	15'-6"	2"	8'-7 1/8"	5'-6"	10'-0 1/2"	7 5/8"
b_{51}(E)	9 5/8"	8'-7 5/8"	15'-6 1/2"	2 1/8"	8'-7 5/8"	5'-6 1/2"	10'-0 1/2"	7 5/8"
b_{52}(E)	9 3/4"	8'-8 1/4"	15'-7 1/8"	2 1/8"	8'-8 1/4"	5'-7 1/8"	10'-0 1/2"	7 5/8"
b_{57}(E)	3 3/8"	3'-0 3/4"	9'-11 5/8"	3/4"	3'-0 3/4"	4'-11 5/8"	5'-0 1/4"	3 3/4"
b_{58}(E)	3 1/2"	3'-1 3/8"	10'-0 1/4"	3/4"	3'-1 3/8"	5'-0 1/4"	5'-0 1/4"	3 3/4"
b_{59}(E)	3 1/2"	3'-1 7/8"	10'-0 3/4"	3/4"	3'-1 7/8"	5'-0 3/4"	5'-0 1/4"	3 3/4"
b_{60}(E)	3 5/8"	3'-3 1/8"	10'-2"	3/4"	3'-3 1/8"	5'-2"	5'-0 1/4"	3 3/4"
b_{61}(E)	3 3/4"	3'-3 5/8"	10'-2 1/2"	3/4"	3'-3 5/8"	5'-2 1/2"	5'-0 1/4"	3 3/4"
b_{62}(E)	3 3/4"	3'-4 1/8"	10'-3 1/8"	3/4"	3'-4 1/8"	5'-3 1/8"	5'-0 1/4"	3 3/4"
b_{63}(E)	3 3/4"	3'-4 3/4"	10'-3 5/8"	7/8"	3'-4 3/4"	5'-3 5/8"	5'-0 1/4"	3 3/4"
b_{64}(E)	3 7/8"	3'-5 3/8"	10'-4 1/4"	7/8"	3'-5 3/8"	5'-4 1/4"	5'-0 1/4"	3 3/4"
b_{65}(E)	3 7/8"	3'-5 7/8"	10'-4 3/4"	7/8"	3'-5 7/8"	5'-4 3/4"	5'-0 1/4"	3 3/4"
b_{66}(E)	4"	3'-7 1/8"	10'-6"	7/8"	3'-7 1/8"	5'-6"	5'-0 1/4"	3 3/4"
b_{67}(E)	4 1/8"	3'-7 5/8"	10'-6 1/2"	7/8"	3'-7 5/8"	5'-6 1/2"	5'-0 1/4"	3 3/4"
b_{68}(E)	4 1/8"	3'-8 1/4"	10'-7 1/8"	7/8"	3'-8 1/4"	5'-7 1/8"	5'-0 1/4"	3 3/4"
g_{41}(E)	11 1/8"	9'-11 1/8"	13'-1 1/8"	2 3/8"	9'-11 1/8"	5'-1 1/8"	8'-0 3/8"	6 1/8"
g_{42}(E)	11 1/8"	9'-11 3/8"	13'-1 3/8"	2 3/8"	9'-11 3/8"	5'-1 3/8"	8'-0 3/8"	6 1/8"
g_{43}(E)	11 1/8"	9'-11 3/4"	13'-1 3/4"	2 3/8"	9'-11 3/4"	5'-1 3/4"	8'-0 3/8"	6 1/8"
g_{44}(E)	11 1/2"	10'-3"	13'-5"	2 1/2"	10'-3"	5'-5"	8'-0 3/8"	6 1/8"
g_{45}(E)	11 1/2"	10'-3 3/8"	13'-5 3/8"	2 1/2"	10'-3 3/8"	5'-5 3/8"	8'-0 3/8"	6 1/8"
g_{46}(E)	11 1/2"	10'-3 5/8"	13'-5 5/8"	2 1/2"	10'-3 5/8"	5'-5 5/8"	8'-0 3/8"	6 1/8"
g_{50}(E)	1'-7 1/8"	17'-1 1/8'	9'-7 1/8"	4 1/8"	17'-1 1/8'	5'-1 1/8"	4'-6 1/8"	3 3/8"
g_{51}(E)	1'-7 1/8	17'-1 3/8"	9'-7 3/8"	4 1/8"	17'-1 3/8"	5'-1 3/8"	4'-6 1/8"	3 3/8"
g_{52}(E)	1'-7 1/4"	17'-1 3/4"	9'-7 5/8"	4 1/8"	17'-1 3/4"	5'-1 5/8"	4'-6 1/8"	3 3/8"
g_{53}(E)	1'-7 1/2"	17'-5"	9'-11"	4 1/8"	17'-5	5'-5"	4'-6 1/8"	3 3/8"
g_{54}(E)	1'-7 1/2"	17'-5 3/8"	9'-11 3/8"	4 1/8"	17'-5 3/8"	5'-5 3/8"	4'-6 1/8"	3 3/8"
g_{55}(E)	1'-7 3/8'	17'-5 5/8"	9'-11 5/8"	4 1/4"	17'-5 5/8"	5'-5 5/8"	4'-6 1/8"	3 3/8"
g_{59}(E)	1'-7 1/8"	17'-1 1/8'	15'-1 1/8"	4 1/8"	17'-1 1/8'	5'-1 1/8"	10'-0 3/8"	7 5/8"
g_{60}(E)	1'-7 1/4"	17'-1 3/4"	15'-1 3/4"	4 1/8"	17'-1 3/4"	5'-1 3/4"	10'-0 3/8"	7 5/8"
g_{64}(E)	1'-7 1/2"	17'-5"	15'-5"	4 1/8"	17'-5"	5'-5"	10'-0 3/8"	7 5/8"
g_{65}(E)	1'-7 3/8'	17'-5 5/8"	15'-5 5/8"	4 1/4"	17'-5 5/8"	5'-5 5/8"	10'-0 3/8"	7 5/8"

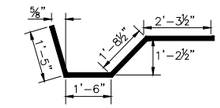

BAR x_3(E)

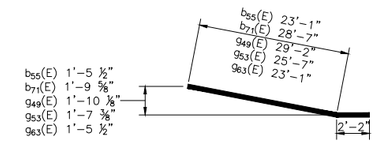

BAR b_{55}(E), b_{71}(E), g_{49}(E), g_{58}(E) and g_{63}(E)

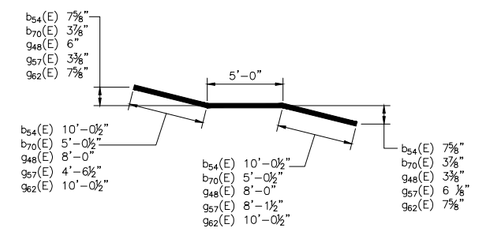

BAR b_{54}(E), b_{70}(E), g_{48}(E), g_{57}(E) and g_{62}(E)

Notes

See Sheet 12 of 76 for bent bar details for the d(E), d_1(E), d_2(E), d_3(E), s(E) and x(E) bars.

DRAWN BY: LMP
CHECKED BY: JKC
DATE: 06/2023

REVISIONS

LEVEL	BY	DATE	DESCRIPTION

Chamlin & Associates

PERU MORRIS
OTTAWA MENDOTA
ILLINOIS

PERU ITEP SHARED USE PATH PROJECT
SECTION 23-00073-00-BT
LASALLE COUNTY

SUPERSTRUCTURE DETAILS - UNIT 3
SPANS 10-12
SN 050-7500

CONSTRUCTION PLANS

CURRENT AS OF: 12/20/2024
SCALE: AS NOTED
SHEET 85
FILE NO.: 66437.00 Y-
OF 183

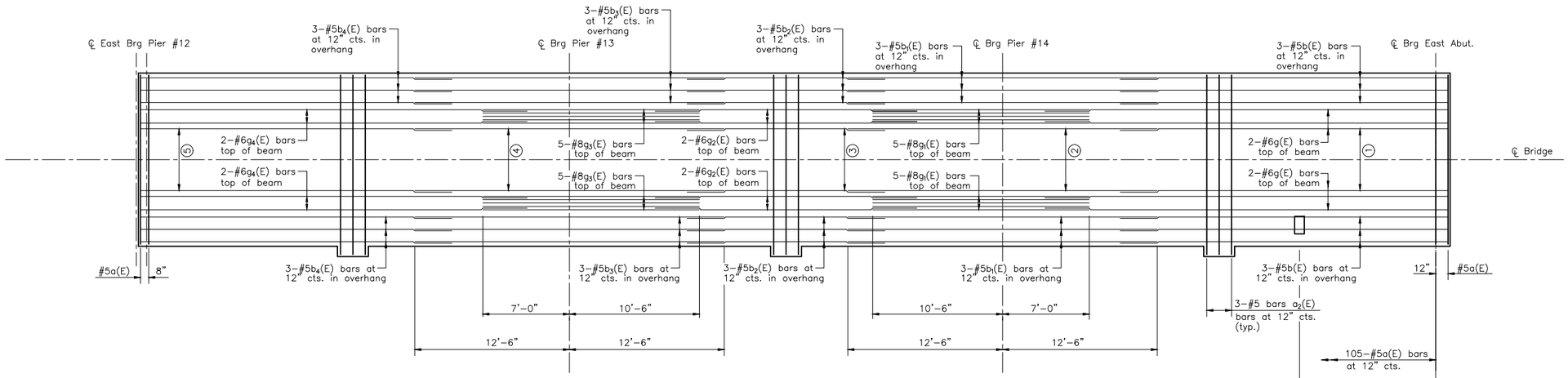

TOP REINFORCEMENT PLAN
(SPANS 13–15)

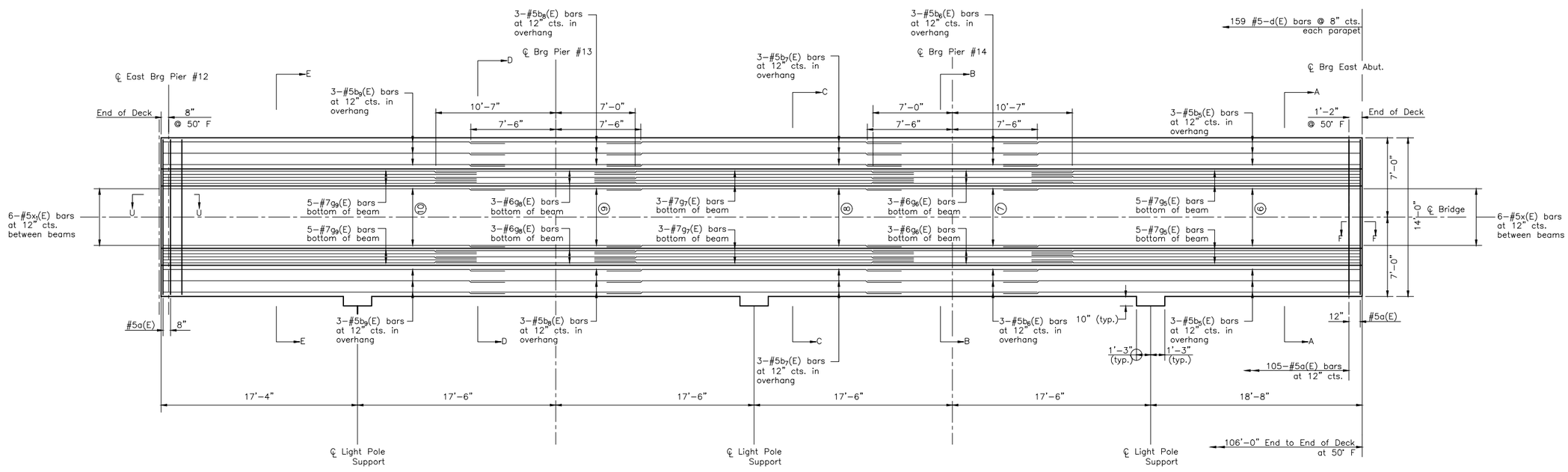

DIMENSIONAL PLAN AND
BOTTOM REINFORCEMENT PLAN
(SPANS 13–15)

① 6–#5b(E) bars at 12" cts. between beams

② 6–#5b1(E) bars at 12" cts. between beams

③ 6–#5b2(E) bars at 12" cts. between beams

④ 6–#5b3(E) bars at 12" cts. between beams

⑤ 6–#5b4(E) bars at 12" cts. between beams

⑥ 6–#5b5(E) bars at 12" cts. between beams

⑦ 6–#5b6(E) bars at 12" cts. between beams

⑧ 6–#5b7(E) bars at 12" cts. between beams

⑨ 6–#5b8(E) bars at 12" cts. between beams

⑩ 6–#5b9(E) bars at 12" cts. between beams

Notes

Dimensions shown are horizontal
They are not along the slopes

See sheet 32 of 76 for Sections:
A–A, B–B, C–C, D–D, E–E, F & U–U

See sheet 31 of 76 for Beam Elevation View

Sheet 30 OF 76 Bridge Sheets

(Sheet 1 of 3) Contract 87876

DRAWN BY: LMP	REVISIONS			PERU MORRIS OTTAWA MENDOTA ILLINOIS	PERU ITEP SHARED USE PATH PROJECT SECTION 23-00073-00-BT LASALLE COUNTY
CHECKED BY: JKC	LEVEL	BY	DATE	DESCRIPTION	SUPERSTRUCTURE PLAN - UNIT 3 SPANS 13 - 15 SN 050-7500
DATE: 06/2023					CONSTRUCTION PLANS

Chamlin & Associates

CURRENT AS OF: 12/20/2024

SCALE: AS NOTED | SHEET 86

FILE NO.: 66437.00 Y– | OF 183

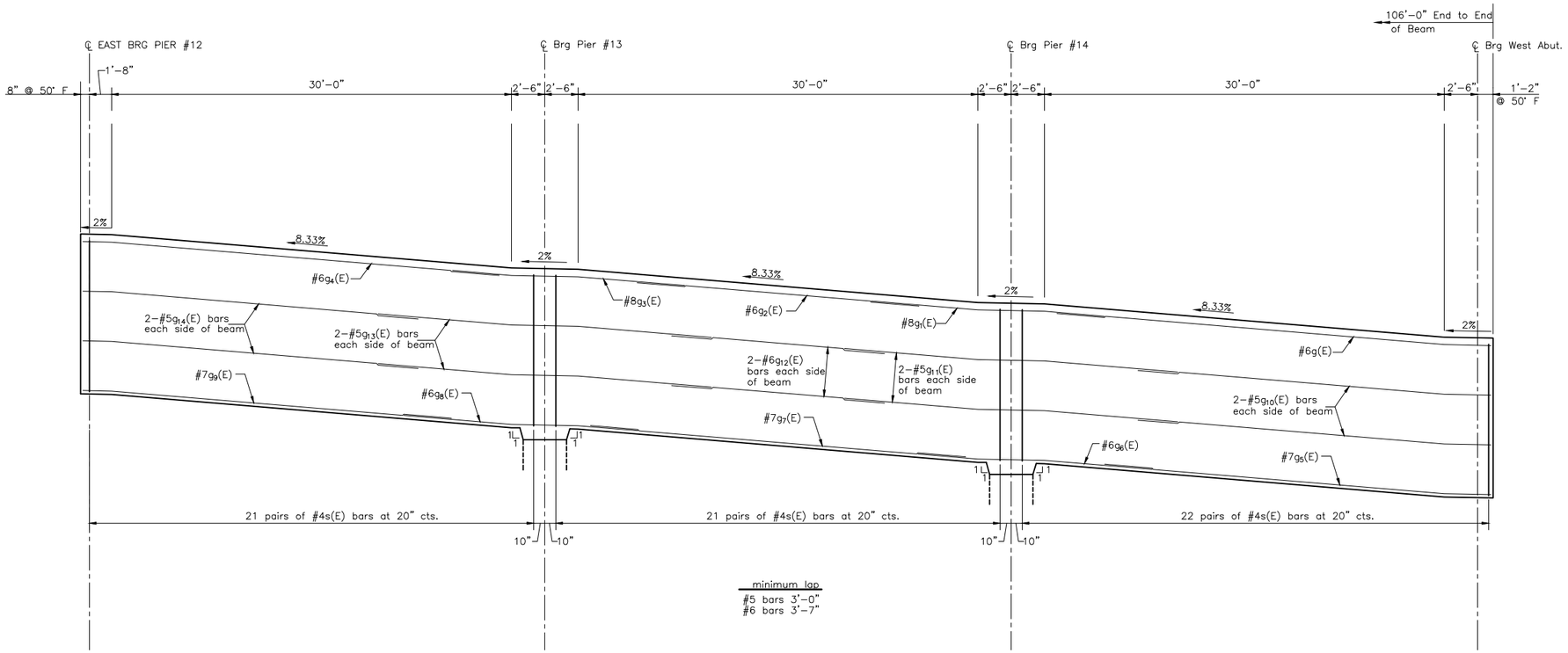

BEAM ELEVATION – LOOKING NORTH
(SPANS 13–15)

BILL OF MATERIAL

Bar	No.	Size	Length	Shape
a(E)	214	5	13'-8"	
a_1(E)	9	5	15'-4"	
a_3(E)	8	5	8'-3"	
a_4(E)	8	5	1'-6"	
b(E)	12	5	26'-7"	
b_1(E)	12	5	25'-1"	
b_2(E)	12	5	16'-1"	
b_3(E)	12	5	25'-1"	
b_4(E)	12	5	25'-3"	
b_5(E)	12	5	31'-7"	
b_6(E)	12	5	15'-1"	
b_7(E)	12	5	26'-1"	
b_8(E)	12	5	15'-0"	
b_9(E)	12	5	30'-3"	
d(E)	318	5	6'-8"	
d_1(E)	318	5	8'-5"	
d_2(E)	18	6	5'-5"	
d_3(E)	36	6	8'-10"	
e_6(E)	36	4	11'-4"	
e_7(E)	48	4	11'-4"	
e_8(E)	12	4	12'-6"	
e_9(E)	12	4	11'-2"	
e_{10}(E)	8	4	35'-11"	
e_{11}(E)	8	4	34'-9"	
e_{12}(E)	8	4	34'-7"	
g (E)	4	6	32'-8"	
g_1(E)	10	8	17'-6"	
g_2(E)	4	6	21'-3"	
g_3(E)	10	8	19'-3"	
g_4(E)	4	6	31'-4"	
g_5(E)	10	7	29'-1"	
g_6(E)	6	6	17'-8"	
g_7(E)	6	7	28'-3"	
g_8(E)	6	6	17'-8"	
g_9(E)	10	7	27'-9"	
g_{10}(E)	8	5	26'-7"	
g_{11}(E)	8	5	25'-1"	
g_{12}(E)	8	5	16'-1"	
g_{13}(E)	8	5	25'-1"	
g_{14}(E)	8	5	25'-3"	
s(E)	256	4	7'-7"	
x(E)	6	5	6'-11"	
x_1(E)	6	5	6'-11"	
Concrete Superstructure			Cu. Yd.	96.2
Reinforcement Bars, Epoxy Coated			Pound	18,930
Rubbed Finish			Sq. Ft.	1,581

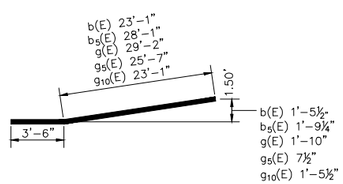

BAR b(E), b_5(e), g(E), g_5(E) and g_{10}(E)

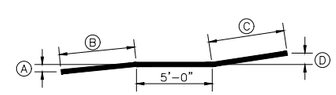

BAR b_1(E), b_3(E), b_6(E), b_8(E) and g_1(E)
BAR g_3(E), g_6(E), g_8(E), g_{11}(E) and g_{13}(E)

Bar	A	B	C	D
b_1(E)	7⅝"	10'-0½"	10'-0½"	7⅝"
b_3(E)	7⅝"	10'-0½"	10'-0½"	7⅝"
b_6(E)	3⅞"	5'-0½"	5'-0½"	3⅞"
b_8(E)	3⅞"	5'-0"	5'-0"	3⅞"
g_1(E)	3⅜"	4'-6"	8'-0"	6"
g_3(E)	6"	8'-0"	4'-6"	3⅜"
g_6(E)	6⅛"	8'-1½"	4'-6½"	3½"
g_8(E)	3⅜"	4'-6½"	8'-1½"	6⅛"
g_{11}(E)	7⅝"	10'-0½"	10'-0½"	7⅝"
g_{13}(E)	7⅝"	10'-0½"	10'-0½"	7⅝"

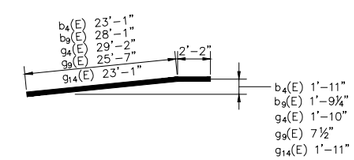

BAR b_4(E), b_9(E), g_4(E), g_9(E) and g_{14}(E)

Notes
See Sheet 12 of 76 for bent bar details for the d(E), d_1(E), d_2(E), d_3(E), s(E), x(E) and x_1(E) bars.

DRAWN BY: LMP	REVISIONS			
CHECKED BY: JKC	LEVEL	BY	DATE	DESCRIPTION
DATE: 06/2023				

Chamlin & Associates

PERU MORRIS
OTTAWA MENDOTA
ILLINOIS

PERU ITEP SHARED USE PATH PROJECT
SECTION 23-00073-00-BT
LASALLE COUNTY

SUPERSTRUCTURE DETAILS - UNIT 3
SPANS 13 - 15
SN 050-7500

CONSTRUCTION PLANS

CURRENT AS OF: 12/20/2024			
SCALE: AS NOTED	SHEET	87	
FILE NO.: 66437.00 Y–	OF	183	

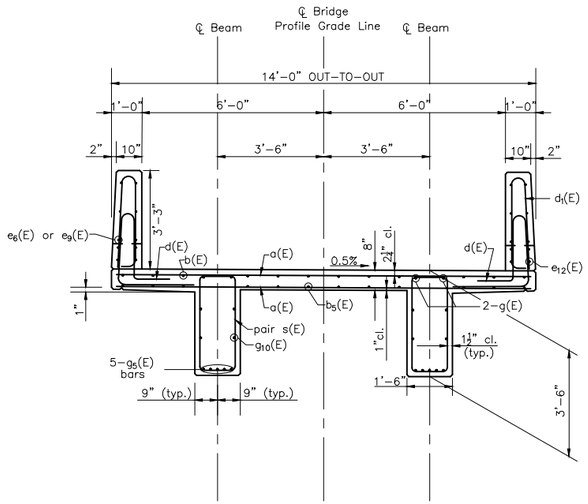

SECTION A-A

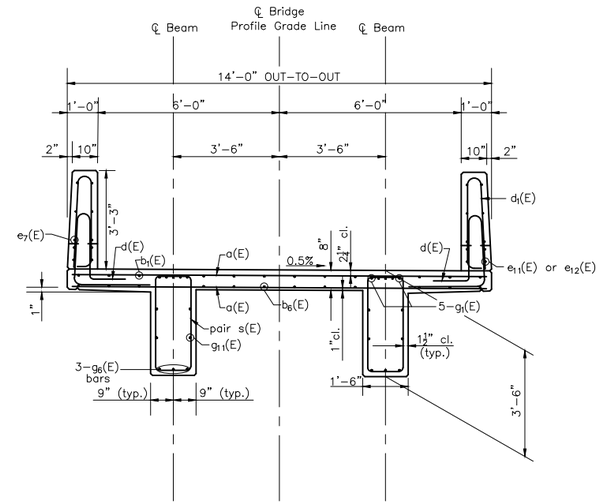

SECTION B-B

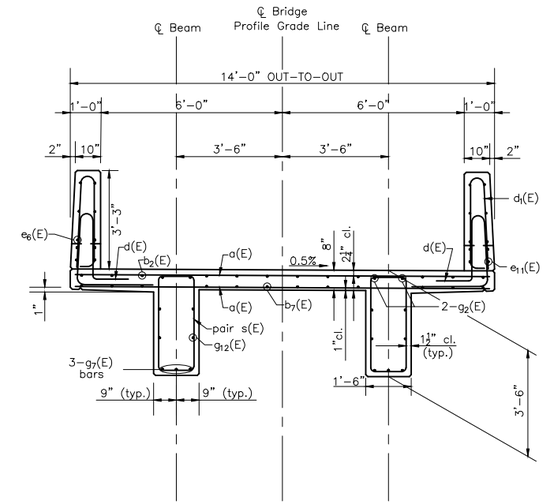

SECTION C-C

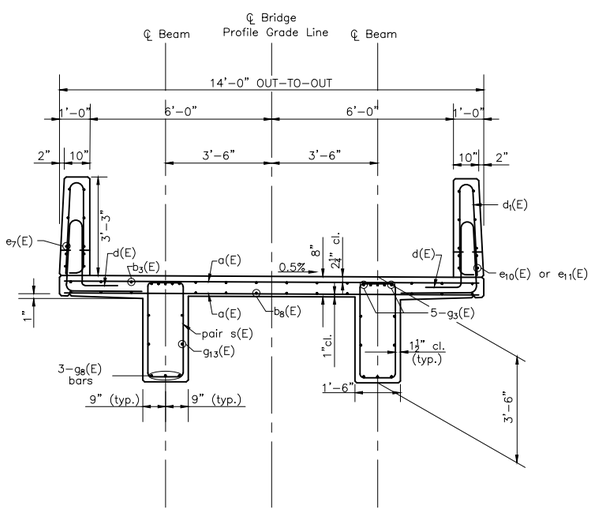

SECTION D-D

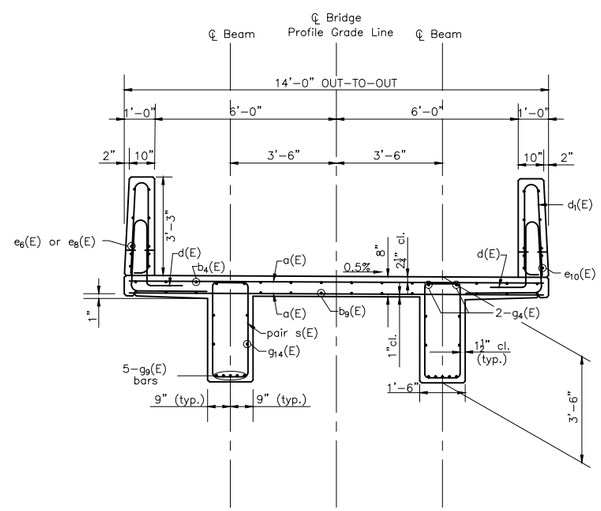

SECTION E-E

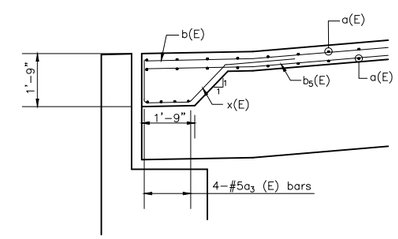

SECTION F-F

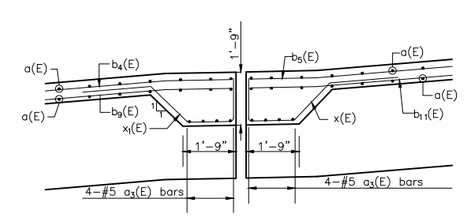

SECTION U-U

DRAWN BY: LMP	REVISIONS			PERU MORRIS	PERU ITEP SHARED USE PATH PROJECT	SUPERSTRUCTURE DETAILS - UNIT 3	CONSTRUCTION PLANS	CURRENT AS OF: 12/20/2024
CHECKED BY: JKC	LEVEL / BY / DATE / DESCRIPTION			OTTAWA MENDOTA	SECTION 23-00073-00-BT	SPANS 13 - 15		SCALE: AS NOTED / SHEET 88
DATE: 06/2023				ILLINOIS	LASALLE COUNTY	SN 050-7500		FILE NO.: 66437.00 Y- / OF 183

Chamlin & Associates

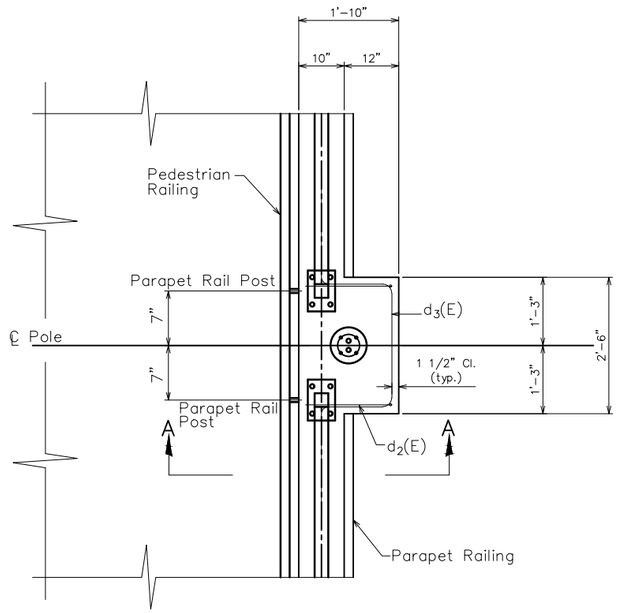

PLAN

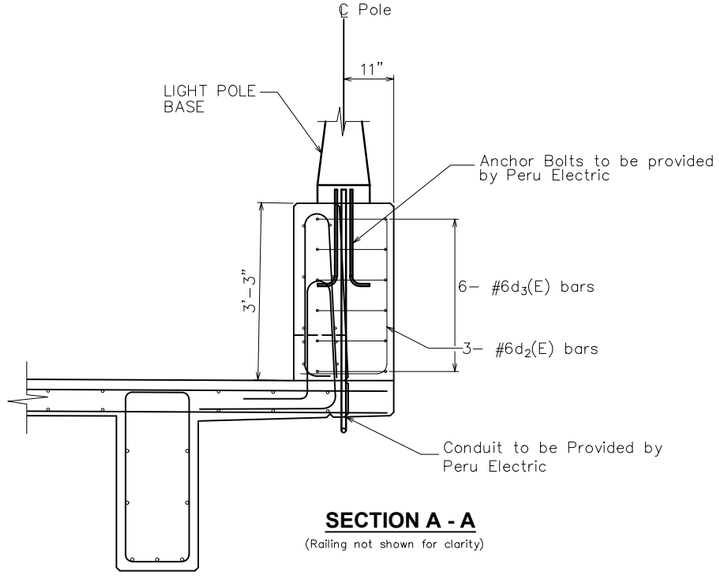

SECTION A - A

(Railing not shown for clarity)

PARAPET DETAIL AT LIGHT POLE

*Expansion Joints at the retaining wall / abutments joints shall be cork joints and the cork shall extend to the top of deck.

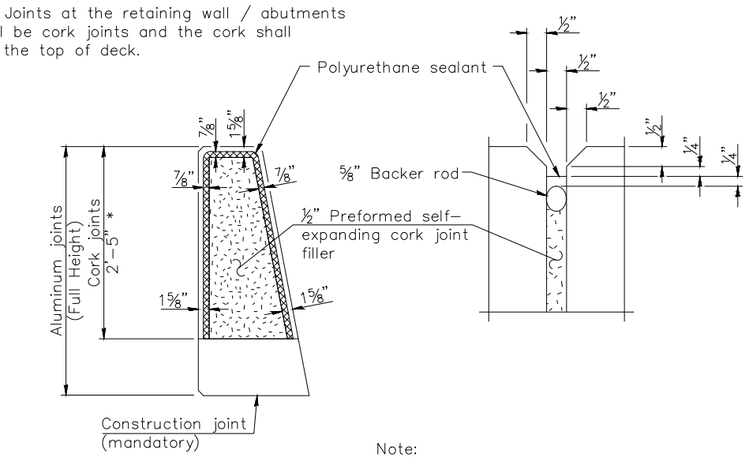

Note:
The polyurethane sealant shall be according to Article 1050.04 of the Standard Specifications and the color shall be gray.

PARAPET JOINT DETAILS

(Sheet 1 of 4)

SHEET 33 OF 76 BRIDGE SHEETS

"CONTRACT NO. 87876"

DRAWN BY: DS	REVISIONS				
CHECKED BY: JKC	LEVEL	BY	DATE	DESCRIPTION	
DATE: 01/2024					

Chamlin & Associates

PERU MORRIS
OTTAWA MENDOTA
ILLINOIS

PERU ITEP SHARED USE PATH PROJECT
SECTION 23-00073-00-BT
LASALLE COUNTY

PARAPET / RAILING DETAILS
SN 050-7500

CONSTRUCTION PLANS

CURRENT AS OF: 12/20/2024			
SCALE: AS NOTED	SHEET	89	
FILE NO.: 66437.00 Y-	OF	183	

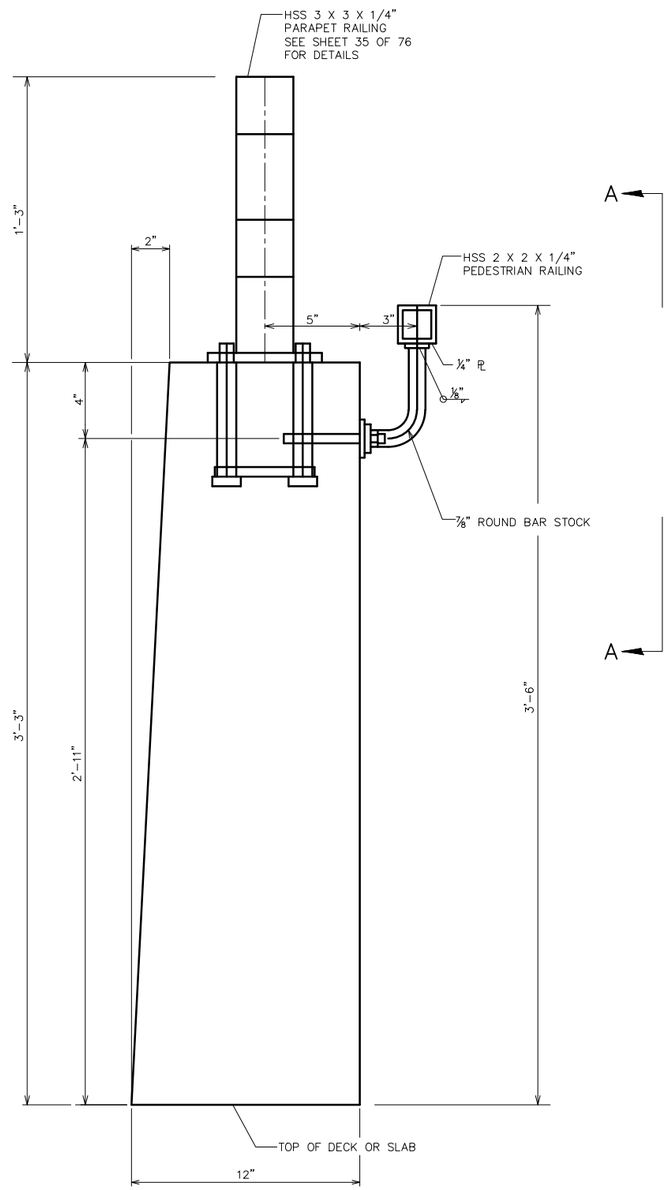

SECTION THRU PARAPET

SEE SUPERSTRUCTURE DETAILS AND RETAINING WALL DETAILS FOR PARAPET REINFORCEMENT

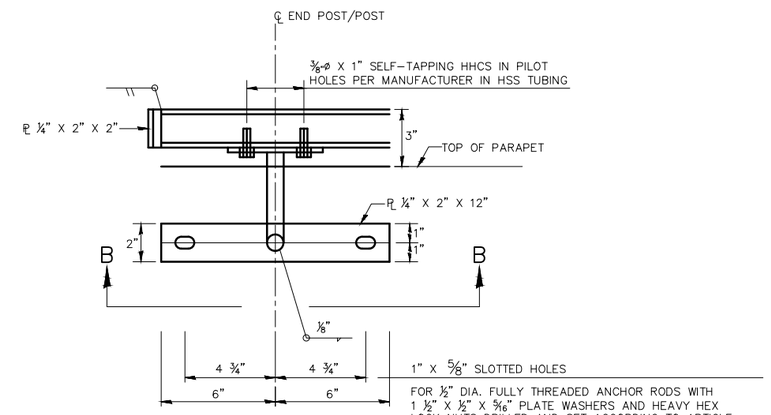

FOR 1/2" DIA. FULLY THREADED ANCHOR RODS WITH 1 1/2" X 1/2" X 5/16" PLATE WASHERS AND HEAVY HEX LOCK NUTS DRILLED AND SET ACCORDING TO ARTICLE 509.06 OF THE STANDARD SPECIFICATIONS. EMBEDMENT SHALL BE ACCORDING TO MANUFACTURERS SPECIFICATIONS.

VIEW A - A

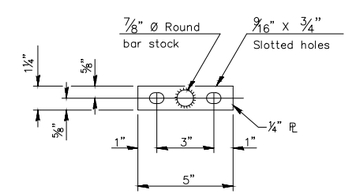

VIEW B - B

(Handrail)

HANDRAIL SHALL BE ATTACHED TO PARAPET AT SAME SPACING AS PARAPET RAILING POSTS
HANDRAIL SHALL BE CONTINUOUS PAST LIGHT POLE OPENINGS IN PARAPET RAILING
SEE SHEETS 37 – 42 OF 76

(Sheet 2 of 4)

SHEET 34 OF 76 BRIDGE SHEETS

"CONTRACT NO. 87876"

DRAWN BY: DS	REVISIONS			PERU MORRIS	PERU ITEP SHARED USE PATH PROJECT
CHECKED BY: JKC	LEVEL / BY / DATE / DESCRIPTION			OTTAWA MENDOTA	SECTION 23-00073-00-BT
DATE: 01/2024				ILLINOIS	LASALLE COUNTY

Chamlin & Associates

PARAPET / RAILING DETAILS
SN 050-7500

CONSTRUCTION PLANS

CURRENT AS OF: 12/20/2024			
SCALE: AS NOTED	SHEET	90	
FILE NO.: 66437.00 Y–	OF	183	

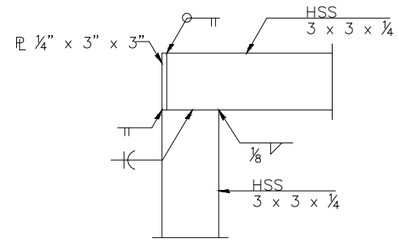

DETAIL A

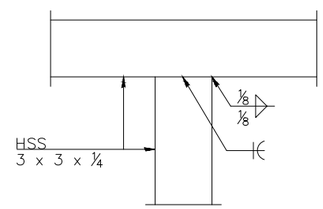

DETAIL B

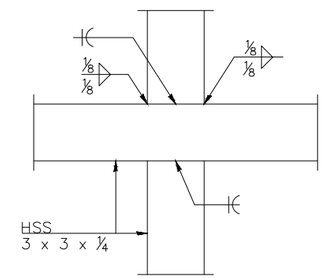

DETAIL C

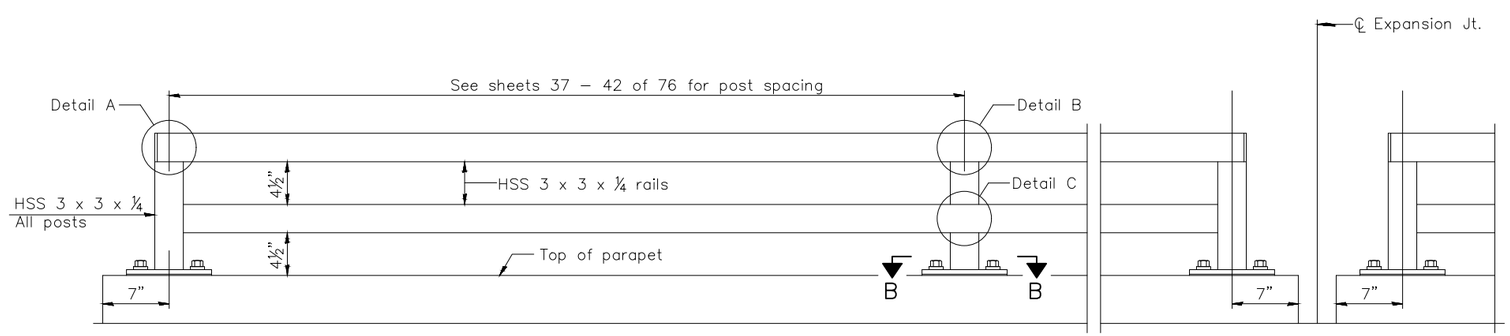

ELEVATION PARAPET RAILING

(Inside face)

(Sheet 3 of 4)

SHEET 35 OF 76 BRIDGE SHEETS **"CONTRACT NO. 87876"**

DRAWN BY: LMP	REVISIONS			
CHECKED BY: JKC	LEVEL	BY	DATE	DESCRIPTION
DATE: 06/2023				

Chamlin & Associates

PERU MORRIS
OTTAWA MENDOTA
ILLINOIS

PERU ITEP SHARED USE PATH PROJECT
SECTION 23-00073-00-BT
LASALLE COUNTY

PARAPET / RAILING DETAILS
SN 050-7500

CONSTRUCTION PLANS

CURRENT AS OF: 12/20/2024	
SCALE: AS NOTED	SHEET 91
FILE NO.: 66437.00 Y–	OF 183

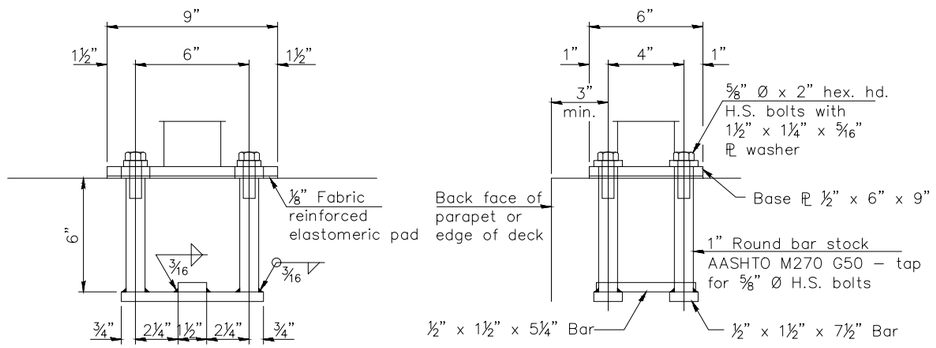

ANCHORAGE ASSEMBLY

The Bicycle Railing fasteners for end posts near expansion joints may need to be installed prior to installing the bent plates.

In lieu of the cast-in-place anchor device shown, the Contractor has the option of drilling and setting ⅝" Ø fully threaded anchor rods with the same plate washers as specified above and heavy hex lock nuts according to Article 509.06 of the Standard Specifications. Embedment shall be according to the manufacturer's specifications.

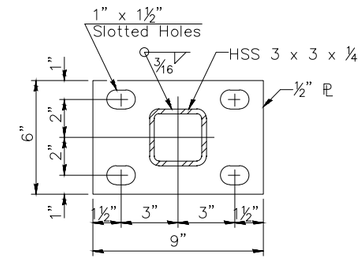

SECTION B-B

Notes:

All heavy hex nuts shall be according to ASTM A 563 grade DH. All fully threaded anchor rods shall be ASTM F1554 grade 105. The post base plate shall be fastened to the sidewalk snug tight and given an additional ⅛" turn.

All posts, rail, splices, anchor devices and plates of the railing shall be painted. The inorganic Zinc rich primer/ acrylic/acrylic paint system shall be used for shop and field painting of parapet railing and handrail. The color of the final coat shall be reddish brown, Munsell no. 2.5 YR 3/4.

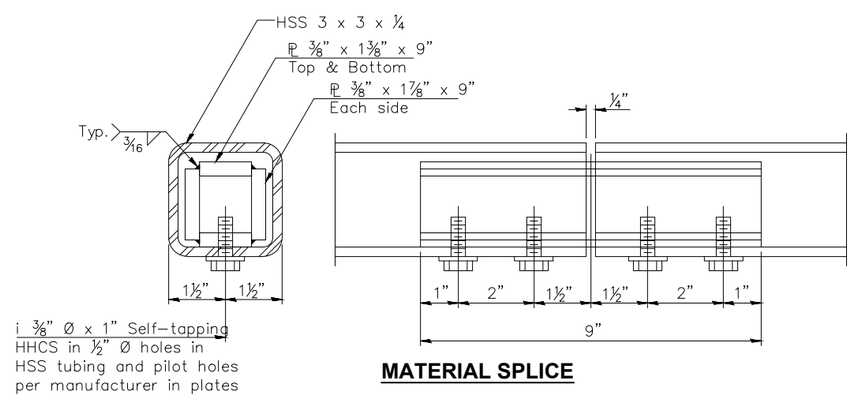

MATERIAL SPLICE

BILL OF MATERIAL

Item	Unit	Quantity
PARAPET RAILING	Foot	1,020
PEDESTRIAN RAILING	Foot	1,056

(Sheet 4 of 4)

SHEET 36 OF 76 BRIDGE SHEETS

"CONTRACT NO.87876"

DRAWN BY: LMP	REVISIONS			
CHECKED BY: JKC	LEVEL	BY	DATE	DESCRIPTION
DATE: 06/2023				

Chamlin & Associates

PERU MORRIS OTTAWA MENDOTA ILLINOIS

PERU ITEP SHARED USE PATH PROJECT SECTION 23-00073-00-BT LASALLE COUNTY

PARAPET / RAILING DETAILS SN 050-7500

CONSTRUCTION PLANS

CURRENT AS OF: 12/20/2024

SCALE: AS NOTED

SHEET 92 OF 183

FILE NO.: 66437.00 Y-

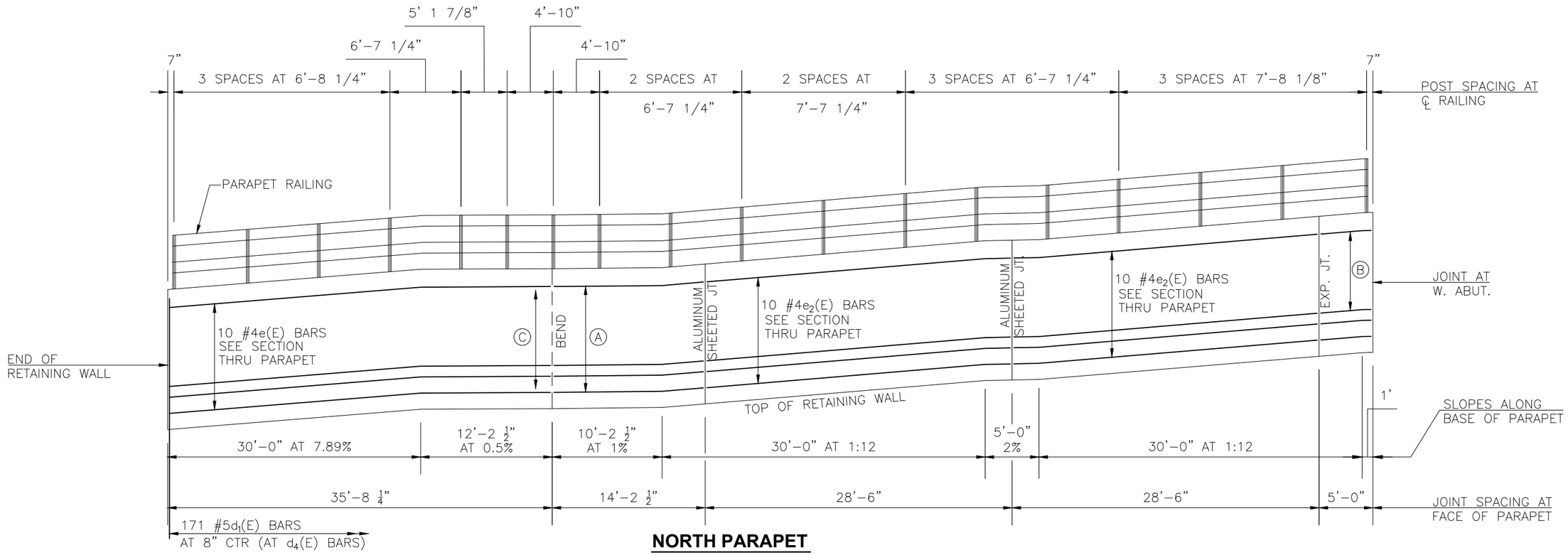

NORTH PARAPET

(LOOKING NORTH)

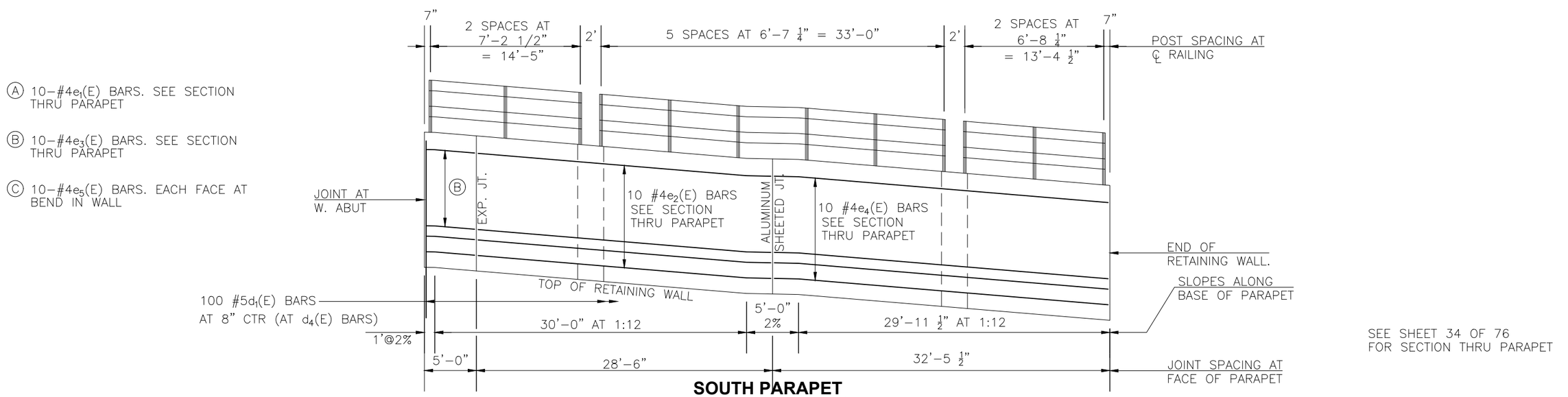

SOUTH PARAPET

(LOOKING SOUTH)

PEDESTRIAN RAILING NOT SHOWN FOR CLARITY

SEE SHEET 34 OF 76 FOR SECTION THRU PARAPET

DRAWN BY: CA	REVISIONS			PERU ITEP SHARED USE PATH PROJECT SECTION 23-00073-00-BT LASALLE COUNTY	PARAPET / RAILING DETAILS WEST RAMPS SN 050-7500
CHECKED BY: JKC	LEVEL	BY	DATE	DESCRIPTION	
DATE: 06/2023					

CONSTRUCTION PLANS

CURRENT AS OF: 12/20/2024

SCALE: AS NOTED

SHEET 93 OF 183

FILE NO.: 66437.00 Y-

SEE SHEET 34 OF 76
FOR SECTION THRU PARAPET

Ⓐ 6-#4e_6(E) BARS
Ⓑ 6-#4e_7(E) BARS
Ⓒ 6-#4e_8(E) BARS
Ⓓ 6-#4e_9(E) BARS
Ⓔ 4-#4e_{10}(E) BARS
Ⓕ 4-#4e_{11}(E) BARS
Ⓖ 4-#4e_{12}(E) BARS

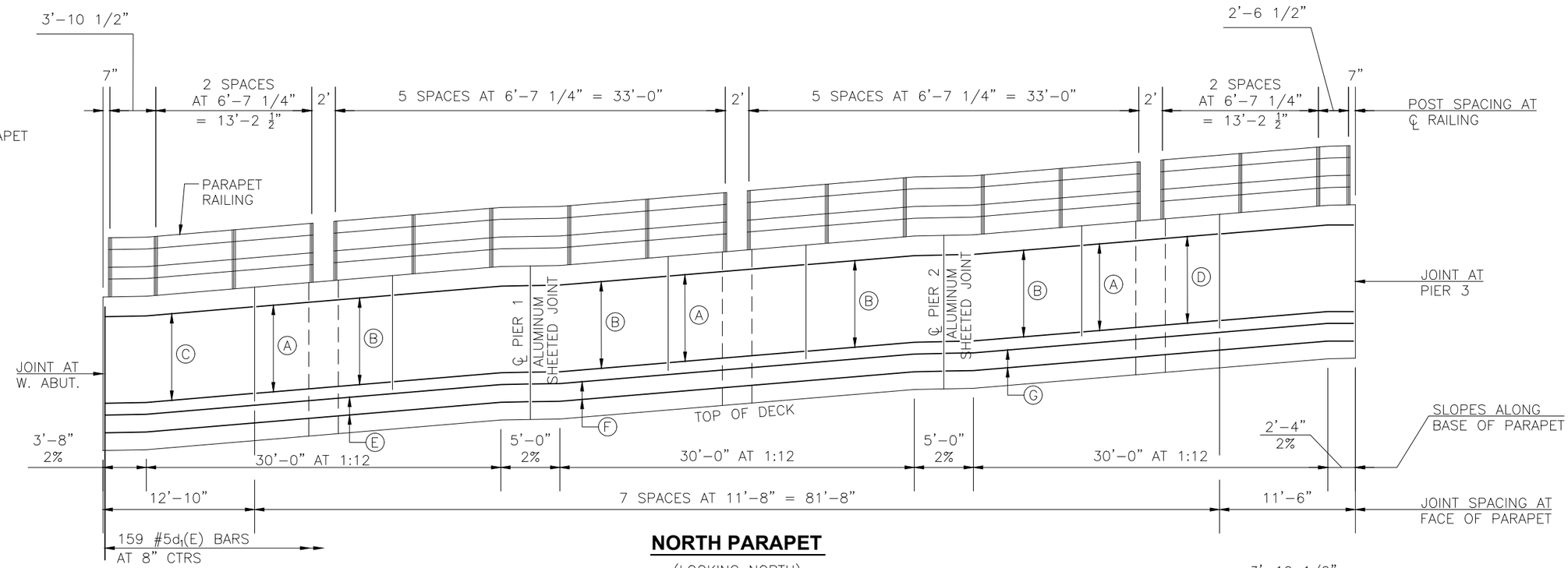

NORTH PARAPET

(LOOKING NORTH)

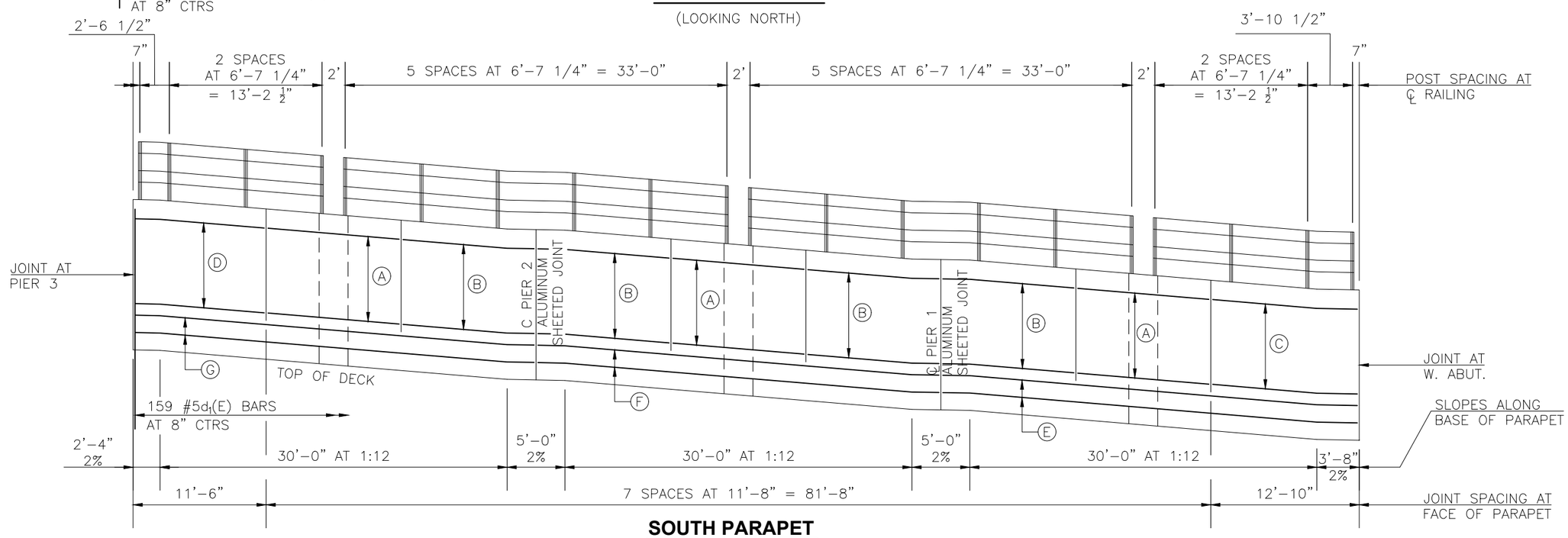

SOUTH PARAPET

(LOOKING SOUTH)

PEDESTRIAN RAILING NOT SHOWN FOR CLARITY

SHEET 38 OF 76 BRIDGE SHEETS

"CONTRACT NO. 87876"

DRAWN BY: CA	REVISIONS			
CHECKED BY: JKC	LEVEL	BY	DATE	DESCRIPTION
DATE: 06/2023				

Chamlin & Associates

PERU ITEP SHARED USE PATH PROJECT
SECTION 23-00073-00-BT
LASALLE COUNTY

PARAPET / RAILING DETAILS
UNIT 1 - SPANS 1 THRU 3
SN 050-7500

CONSTRUCTION PLANS

CURRENT AS OF: 12/20/2024
SCALE: AS NOTED
SHEET 94
FILE NO.: 66437.00 Y-
OF 183

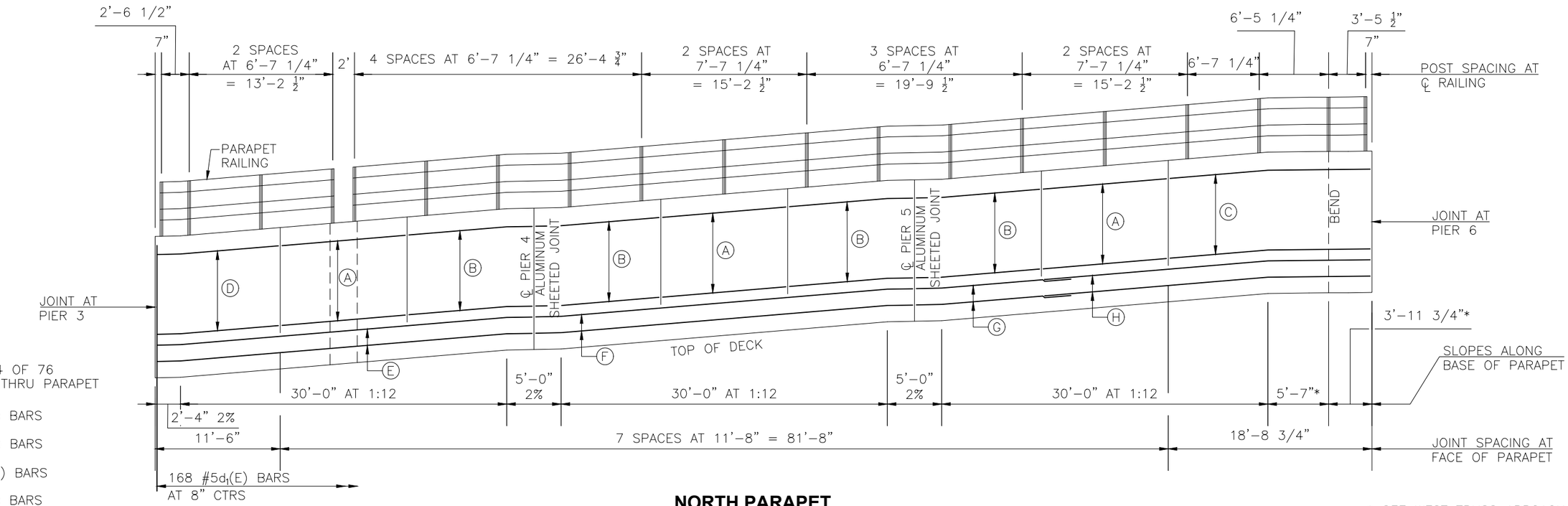

NORTH PARAPET

(LOOKING NORTH)

SEE SHEET 34 OF 76 FOR SECTION THRU PARAPET

- (A) 6-#4e6(E) BARS
- (B) 6-#4e7(E) BARS
- (C) 6-#4e13(E) BARS
- (D) 6-#4e9(E) BARS
- (E) 4-#4e14(E) BARS
- (F) 4-#4e11(E) BARS
- (G) 4-#4e15(E) BARS
- (H) 4-#4e16(E) BARS
- (I) 4-#4$_{17}$(E) BARS
- (J) 4-#4e18(E) BARS
- (K) 6-#4e19(E) BARS

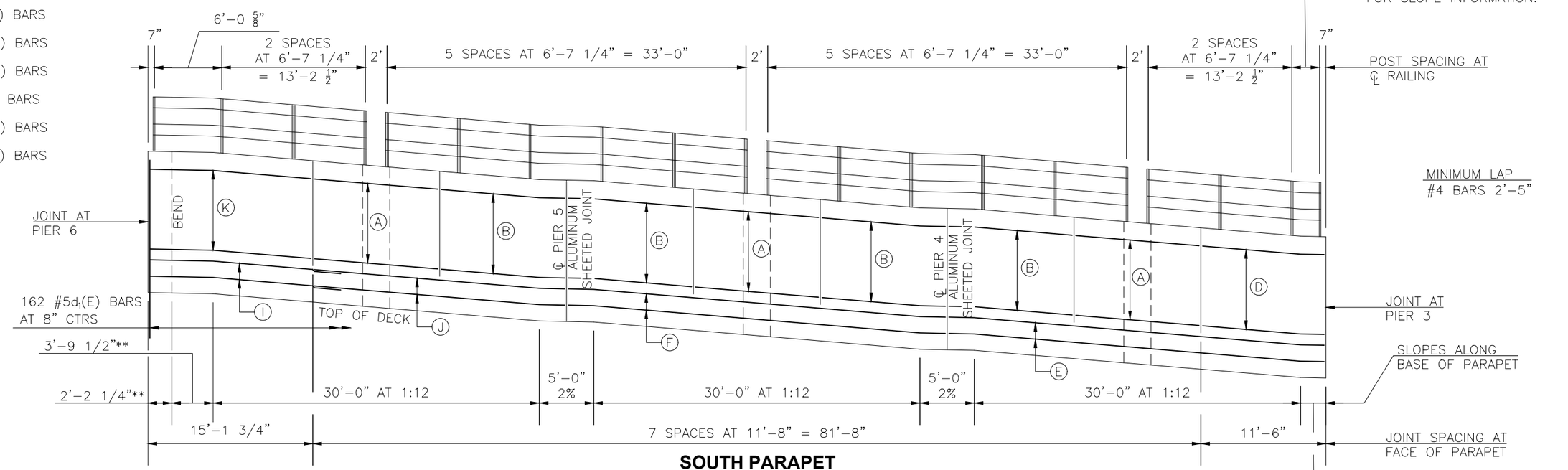

SOUTH PARAPET

(LOOKING SOUTH)

* SEE WEST TRUSS APROACH DETAIL ON SHEET ?? OF ?? FOR SLOPE INFORMATION.

** SEE SPECIAL DECK ELEVATION DETAIL ON SHEET 10 OF 76 FOR SLOPE INFORMATION.

PEDESTRIAN RAILING NOT SHOWN FOR CLARITY

SHEET 39 OF 76 BRIDGE SHEETS

"CONTRACT NO. 87876"

DRAWN BY: CA	REVISIONS			PERU ITEP SHARED USE PATH PROJECT SECTION 23-00073-00-BT LASALLE COUNTY	PARAPET / RAILING DETAILS UNIT 1 - SPANS 4 THRU 6 SN 050-7500
CHECKED BY: JKC	LEVEL / BY / DATE / DESCRIPTION				
DATE: 06/2023					

Chamlin & Associates

CONSTRUCTION PLANS

CURRENT AS OF: 12/20/2024

SCALE: AS NOTED

SHEET 95 OF 183

FILE NO.: 66437.00 Y-

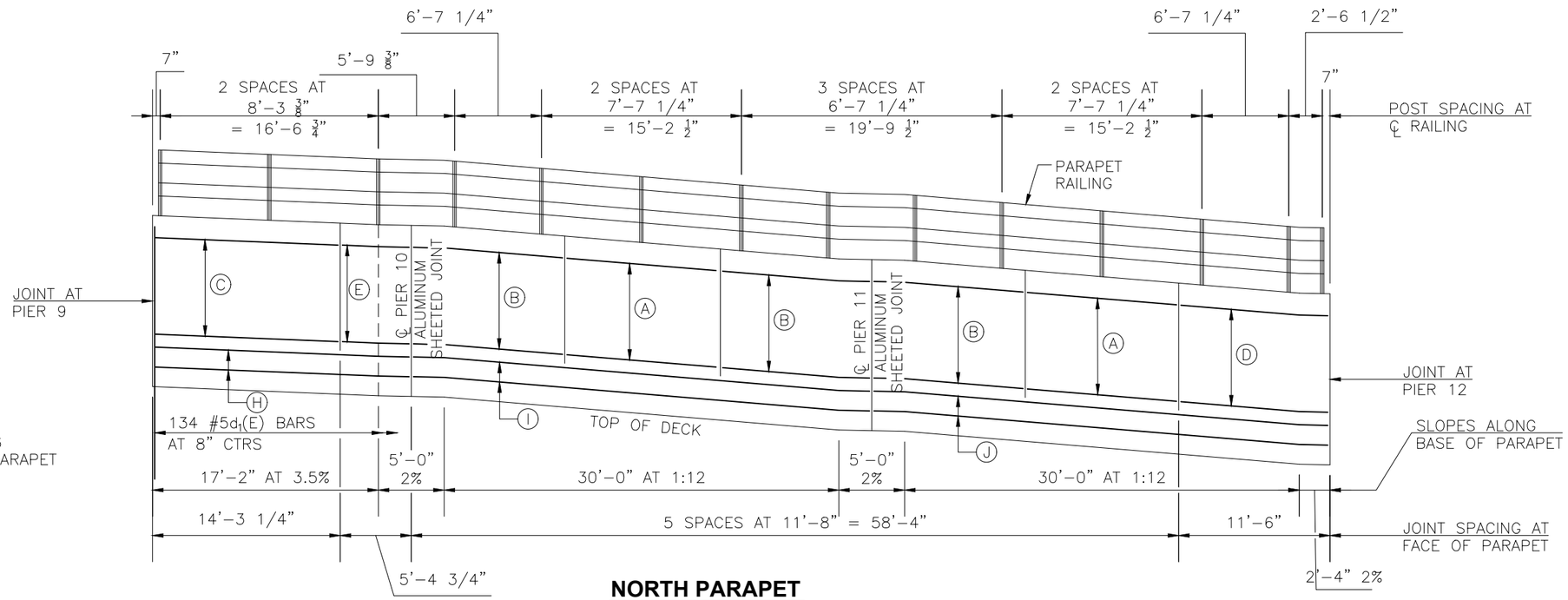

NORTH PARAPET

(LOOKING NORTH)

SEE SHEET 34 OF 76 FOR SECTION THRU PARAPET

- Ⓐ 6-#4e6(E) BARS
- Ⓑ 6-#4e7(E) BARS
- Ⓒ 6-#4e20(E) BARS
- Ⓓ 6-#4e9(E) BARS
- Ⓔ 6-#4e21(E) BARS
- Ⓕ 6-#4e22(E) BARS
- Ⓖ 6-#4e23(E) BARS
- Ⓗ 4-#4e24(E) BARS
- Ⓘ 4-#411(E) BARS
- Ⓙ 4-#4e12(E) BARS
- Ⓚ 4-#4e25(E) BARS

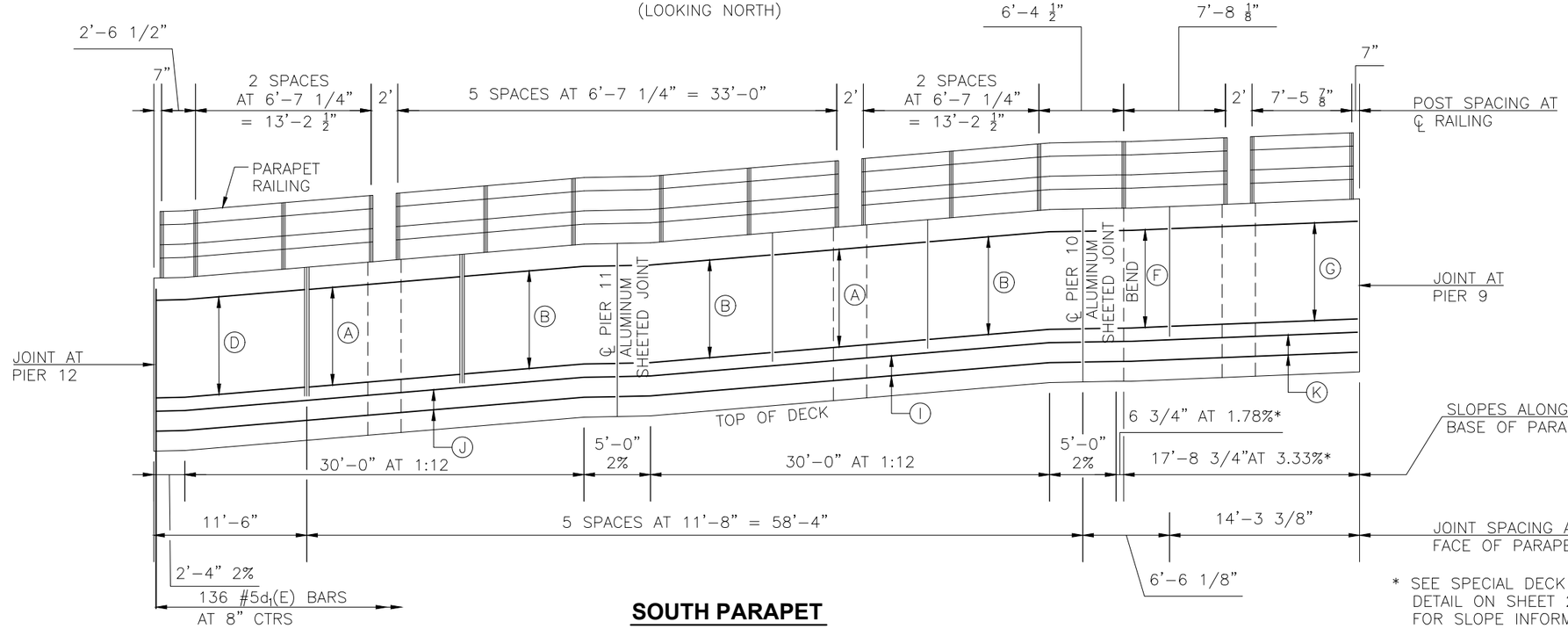

SOUTH PARAPET

(LOOKING SOUTH)

* SEE SPECIAL DECK ELEVATION DETAIL ON SHEET 25 OF 76 FOR SLOPE INFORMATION.

PEDESTRIAN RAILING NOT SHOWN FOR CLARITY

SHEET 40 OFF 76 BRIDGE SHEETS

"CONTRACT NO. 87876"

DRAWN BY: CA	REVISIONS				PERU ITEP SHARED USE PATH PROJECT SECTION 23-00073-00-BT LASALLE COUNTY	PARAPET / RAILING DETAILS UNIT 3 - SPANS 10 THRU 12 SN 050-7500	CONSTRUCTION PLANS	CURRENT AS OF: 12/20/2024
CHECKED BY: JKC	LEVEL	BY	DATE	DESCRIPTION				SCALE: AS NOTED / SHEET 96
DATE: 06/2023								FILE NO.: 66437.00 Y- / OF 183

Chamlin & Associates

SEE SHEET 34 OF 76
FOR SECTION THRU PARAPET

Ⓐ 6-#4e_6(E) BARS

Ⓑ 6-#4e_7(E) BARS

Ⓒ 6-#4e_8(E) BARS

Ⓓ 6-#4e_9(E) BARS

Ⓔ 4-#4e_{10}(E) BARS

Ⓕ 4-#4e_{11}(E) BARS

Ⓖ 4-#4e_{12}(E) BARS

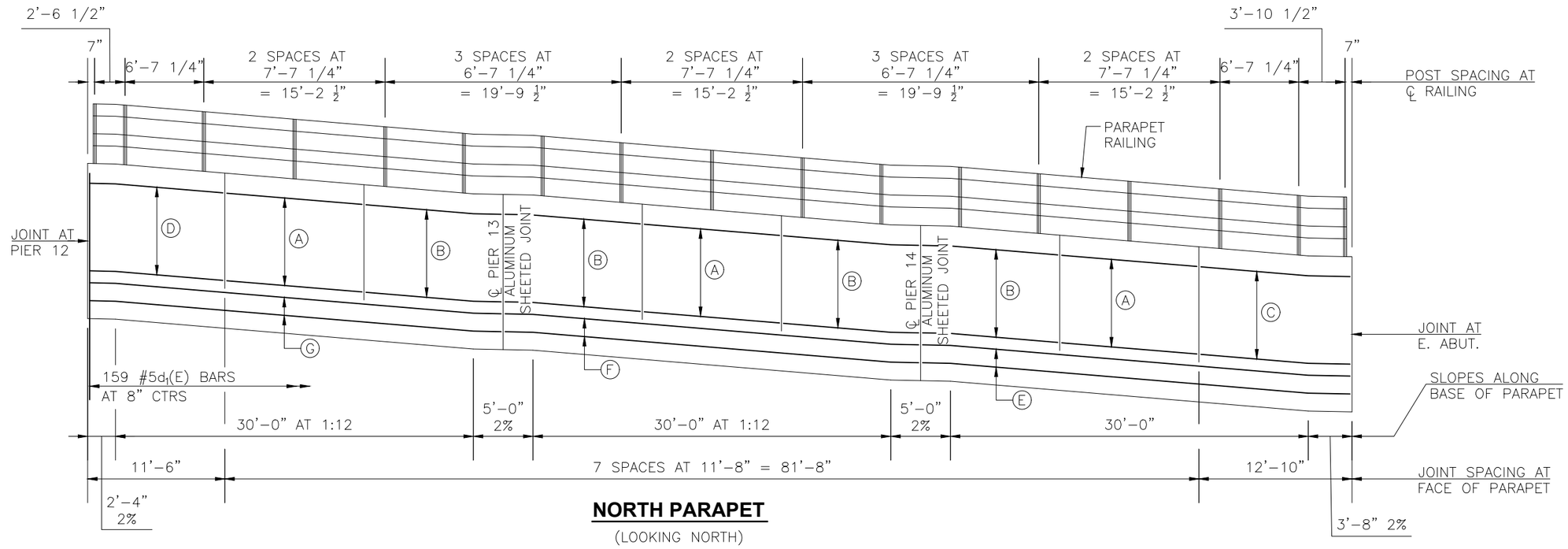

NORTH PARAPET

(LOOKING NORTH)

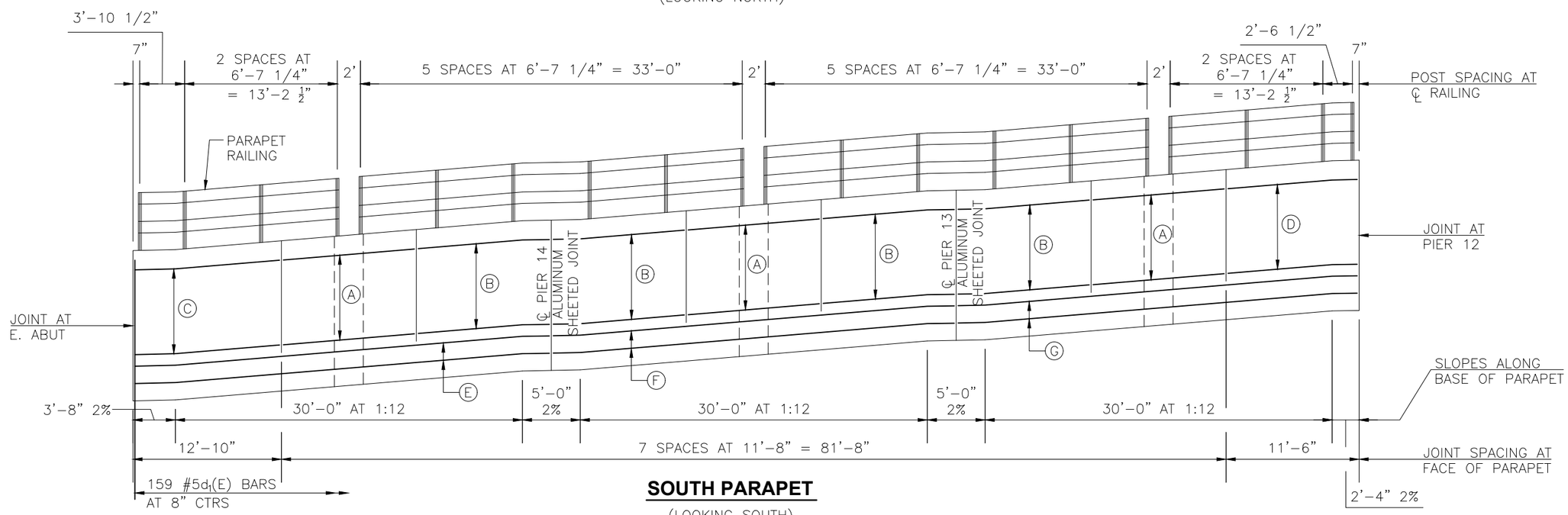

SOUTH PARAPET

(LOOKING SOUTH)

PEDESTRIAN RAILING NOT SHOWN FOR CLARITY

SHEET 41 OF 76 BRIDGE SHEETS

"CONTRACT NO. 87876"

DRAWN BY: CA	REVISIONS			PERU ITEP SHARED USE PATH PROJECT SECTION 23-00073-00-BT LASALLE COUNTY	PARAPET / RAILING DETAILS UNIT 3 - SPANS 13 THRU 15 SN 050-7500	CONSTRUCTION PLANS
CHECKED BY: JKC	LEVEL / BY / DATE / DESCRIPTION					
DATE: 06/2023						

CURRENT AS OF: 12/20/2024
SCALE: AS NOTED
SHEET 97 OF 183
FILE NO.: 66437.00 Y-

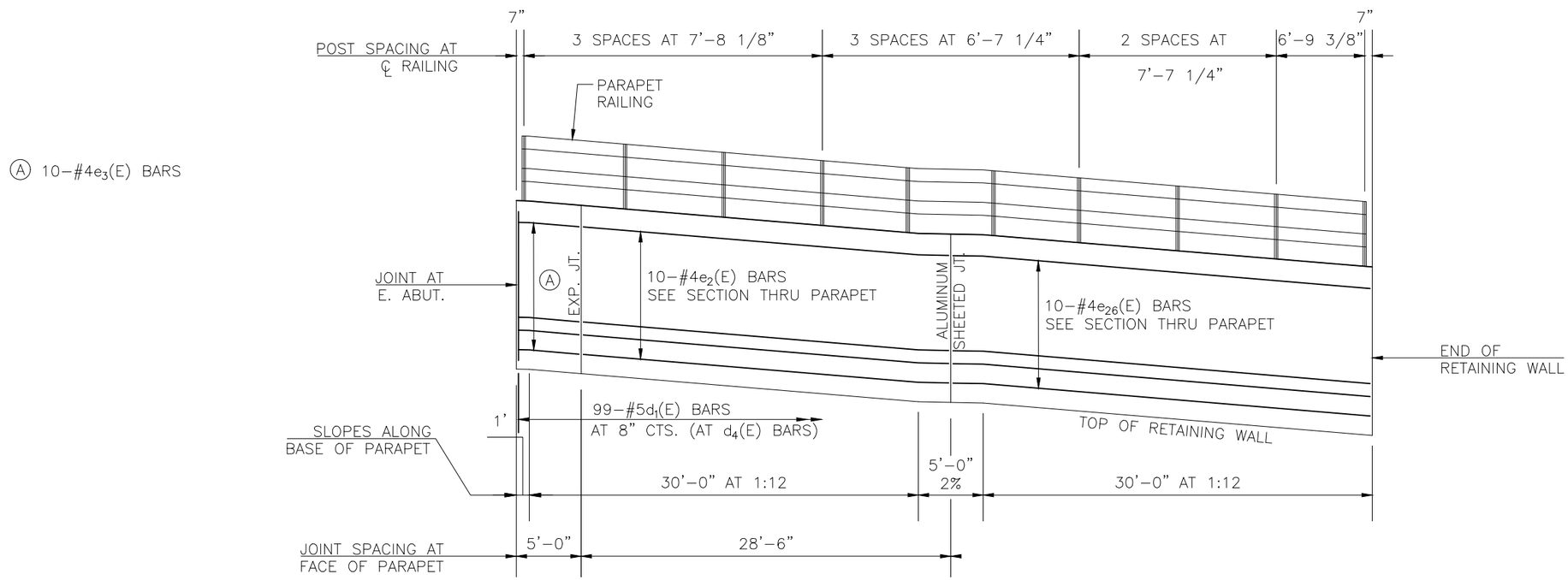

SOUTH PARAPET

(LOOKING SOUTH)
PEDESTRIAN RAILING NOT SHOWN FOR CLARITY

SEE SHEET 34 OF 76
FOR SECTION THRU PARAPET

DRAWN BY: CA	REVISIONS			PERU ITEP SHARED USE PATH PROJECT SECTION 23-00073-00-BT LASALLE COUNTY	PARAPET / RAILING DETAILS EAST RAMP SN 050-7500	CONSTRUCTION PLANS	CURRENT AS OF: 12/20/2024
CHECKED BY: JKC	LEVEL / BY / DATE / DESCRIPTION						SCALE: AS NOTED — SHEET 98
DATE: 06/2023							FILE NO.: 66437.00 Y- — OF 183

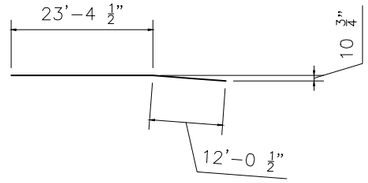

BAR e(E)

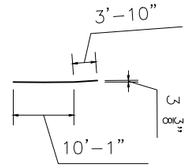

BAR e_1(E)

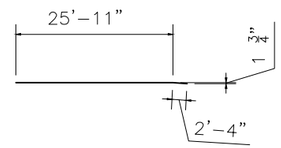

BAR e_2(E)

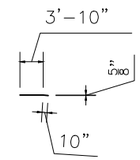

BAR e_3(E)

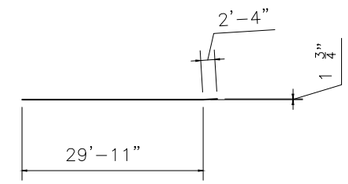

BAR e_4(E)

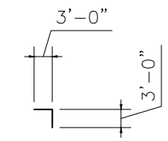

BAR e_5(E)

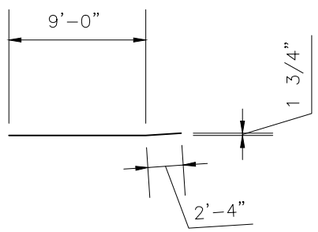

BAR e_7(E)

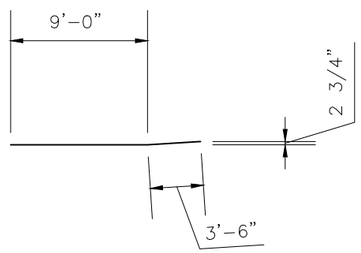

BAR e_8(E)

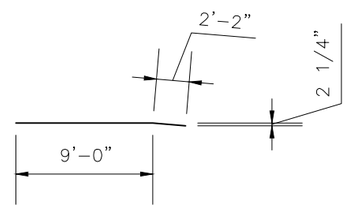

BAR e_9(E)

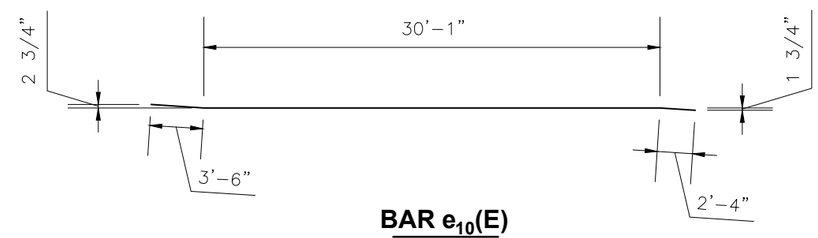

BAR e_{10}(E)

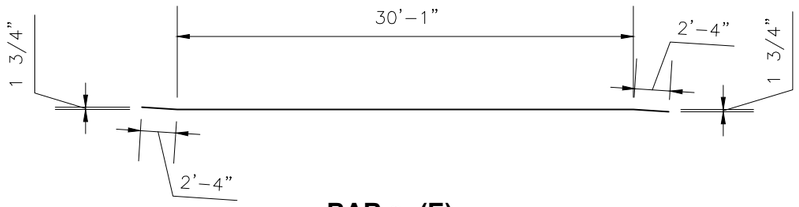

BAR e_{11}(E)

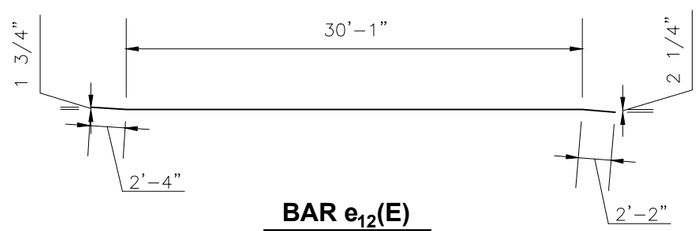

BAR e_{12}(E)

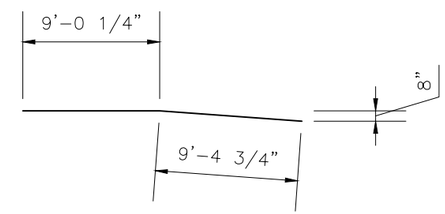

BAR e_{13}(E)

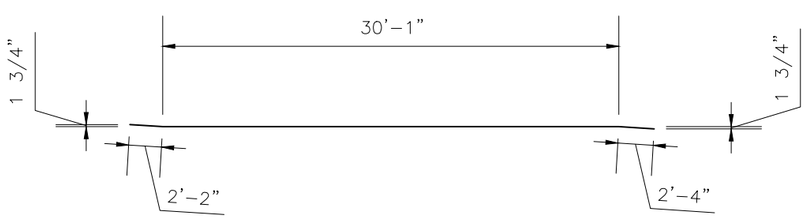

BAR e_{14}(E)

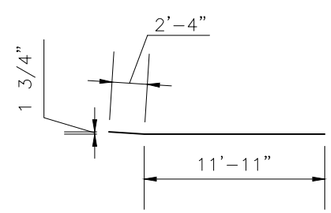

BAR e_{15}(E)

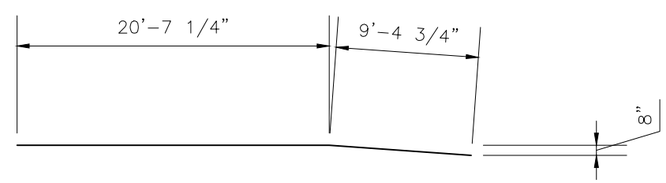

BAR e_{16}(E)

SHEET 43 OF 76 BRIDGE SHEETS

"CONTRACT NO. 87876"

DRAWN BY: CA	REVISIONS			
CHECKED BY: JKC	LEVEL	BY	DATE	DESCRIPTION
DATE: 06/2023				

Chamlin & Associates

PERU ITEP SHARED USE PATH PROJECT
SECTION 23-00073-00-BT
LASALLE COUNTY

PARAPET / RAILING DETAILS
BENT BAR DETAILS
SN 050-7500

CONSTRUCTION PLANS

CURRENT AS OF: 12/20/2024

SCALE: AS NOTED

SHEET 99 OF 183

FILE NO.: 66437.00 Y-

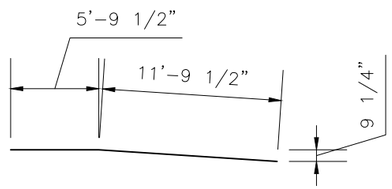

BAR e_{17}(E)

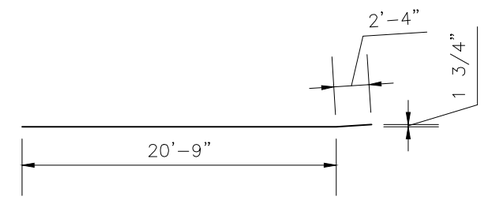

BAR e_{18}(E)

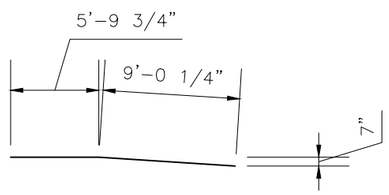

BAR e_{19}(E)

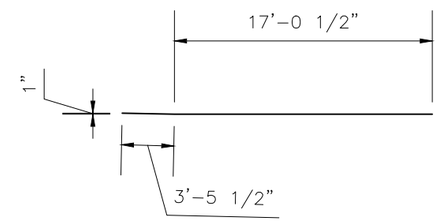

BAR e_{25}(E)

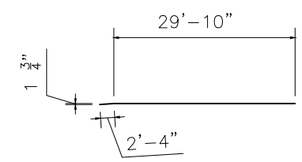

BAR e_{26}(E)

SHEET 44 OF 76 BRIDGE SHEETS

"CONTRACT NO. 87876"

DRAWN BY: CA	REVISIONS			
CHECKED BY: JKC	LEVEL	BY	DATE	DESCRIPTION
DATE: 06/2023				

Chamlin & Associates

PERU ITEP SHARED USE PATH PROJECT
SECTION 23-00073-00-BT
LASALLE COUNTY

PARAPET / RAILING DETAILS
BENT BAR DETAILS
SN 050-7500

CONSTRUCTION PLANS

CURRENT AS OF: 12/20/2024			
SCALE: AS NOTED	SHEET	100	
FILE NO.: 66437.00 Y-	OF	183	