F.A.U RTE.	SECTION	COUNTY	TOTAL SHEETS	SHEET NO.
2520	16-00078-00-CH	COOK	228	1
		ILLINOIS	CONTRACT NO. 61K89	

FOR INDEX OF SHEETS, SEE SHEET NO. 2

TRAFFIC DATA: 03-07-2025 LETTING ITEM 176

ADT
JOHN HUMPHREY DR = N. LEG 8,400 (2016) 10,700 (2050)
JOHN HUMPHREY DR = S. LEG 12,800 (2016) 16,300 (2050)
143RD ST = E. LEG 25,100 (2016) 32,000 (2050)
143RD ST = W. LEG 25,900 (2016) 33,000 (2050)

DESIGN SPEED
JOHN HUMPHREY DR = N. LEG 35 MPH
JOHN HUMPHREY DR = S. LEG 35 MPH
143RD ST = E. LEG 40 MPH
143RD ST = W. LEG 40 MPH

POSTED SPEED LIMIT
JOHN HUMPHREY DR = N. LEG 35 MPH
JOHN HUMPHREY DR = S. LEG 35 MPH
143RD ST = E. LEG 35 MPH
143RD ST = W. LEG 35 MPH

DESIGN DESIGNATION
JOHN HUMPHREY DR = MAJOR COLLECTOR
143RD ST = MINOR ARTERIAL

STATE OF ILLINOIS
DEPARTMENT OF TRANSPORTATION

PROPOSED ROADWAY PLANS

MUN 2520 (JOHN HUMPHREY DRIVE) AT FAU 1600 (143RD STREET) SECTION 16–00078–00–CH, PROJECT FBGB(348) INTERSECTION IMPROVEMENTS & ROADWAY RECONSTRUCTION VILLAGE OF ORLAND PARK, COOK COUNTY C–91–261–24

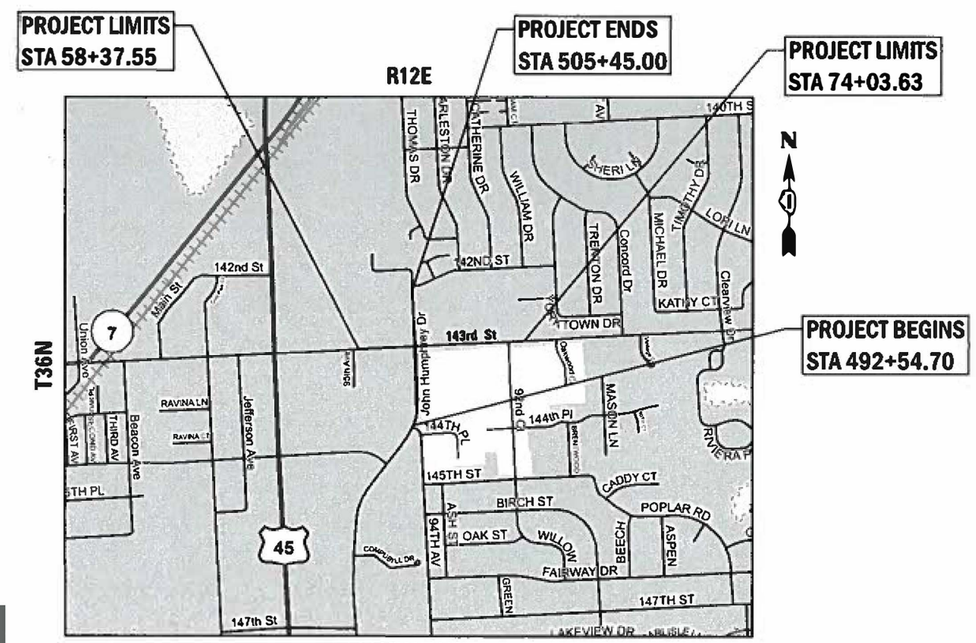

LOCATION MAP
N.T.S.

JOHN HUMPHREY DRIVE GROSS & NET LENGTH = 1,290.30 FT. = 0.24 MILE
143RD STREET GROSS & NET LENGTH = 1,821.14 FT. = 0.34 MILE
GROSS & NET LENGTH OF THE PROJECT = 3,111.44 FT. = 0.58 MILE

D–91–261–24

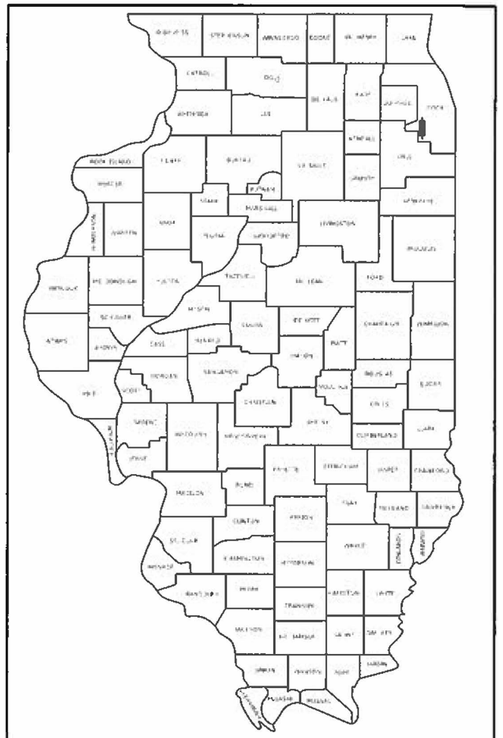

LOCATION OF SECTION INDICATED THUS: –

STATE OF ILLINOIS
DEPARTMENT OF TRANSPORTATION DIVISION OF HIGHWAYS

Approved _____
VILLAGE OF ORLAND PARK, DIRECTOR OF ENGINEERING

Passed Jan 2 2025
DISTRICT ONE ENGINEER OF LOCAL ROADS & STREETS

Releasing for Bid Based on Limited Review 1.6.2025
REGIONAL ENGINEER

PRINTED BY THE AUTHORITY OF THE STATE OF ILLINOIS

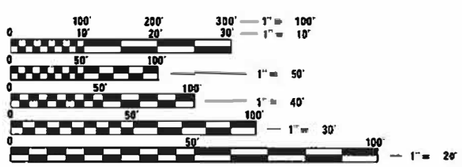

FULL SIZE PLANS HAVE BEEN PREPARED USING STANDARD ENGINEERING SCALES. REDUCED SIZED PLANS WILL NOT CONFORM TO STANDARD SCALES. IN MAKING MEASUREMENTS ON REDUCED PLANS, THE ABOVE SCALES MAY BE USED.

J.U.L.I.E.
JOINT UTILITY LOCATION INFORMATION FOR EXCAVATION
1–800–892–0123
OR 811

PATRICK ENGINEERING

PATRICK ENGINEERING, INC.	PATRICK ENGINEERING, INC.	WANG ENGINEERING	CHRISTOPHER B. BURKE ENGINEERING DRAINAGE	CHRISTOPHER B. BURKE ENGINEERING TRAFFIC	CHRISTOPHER B. BURKE ENGINEERING LIGHTING
JARROD J. CEBULSKI, P.E. NO. 062-050473 EXP. DATE: 11/30/25 APPLY TO DRAWINGS: 1–31, 34–53, 72–82, 123–125, 190–228	ARSALAN M. KHAN, S.E. NO. 062-055746 EXP. DATE: 11/30/26 APPLY TO DRAWINGS: 138–146, 148–189	MICKEY L. SNIDER, P.E. NO. 062-058045 EXP. DATE: 11/30/25 APPLY TO DRAWINGS: 147	MIROSLAW ANTAS, P.E. NO. 062-060781 EXP. DATE: 11/30/25 APPLY TO DRAWINGS: 32–33, 54–71, 83–85	BENJAMIN CHAVEZ, P.E. NO. 062-063542 EXP. DATE: 11/30/25 APPLY TO DRAWINGS: 86–122	ANTHONY J. BENICCO, P.E. NO. 062-057484 EXP. DATE: 11/30/25 APPLY TO DRAWINGS: 126–137

FEDERAL AID DESIGN PROGRAM ENGINEER : CARMEN E. RAMOS, P.E., SCHAUMBURG, IL

CONTRACT NO. 61K89

INDEX OF SHEETS

COMMITMENTS

1. TREES THREE (3) INCHES OR GREATER IN DIAMETER AT BREAST HEIGHT SHALL NOT BE CLEARED FROM APRIL 1ST THROUGH SEPTEMBER 30TH OF ANY GIVEN YEAR.

IDOT DISTRICT ONE STANDARDS

BD-01	DRIVEWAY DETAILS - DISTANCE BETWEEN R.O.W. AND FACE OF CURB & EDGE OF SHOULDER > = 15' (4.5 m)
BD-02	DRIVEWAY DETAILS - DISTANCE BETWEEN ROW AND FACE OF CURB < 15' (4.5 m)
BD-07	DETAIL OF STORM SEWER CONNECTION TO EXISTING SEWER
BD-08	DETAILS FOR FRAMES AND LIDS ADJUSTMENT WITH MILLING
BD-22	PAVEMENT PATCHING FOR HMA SURFACE PAVEMENT
BD-32	BUTT JOINT AND HMA TAPER DETAILS
BD-34	DETAILS FOR DEPRESSED CURB & GUTTER AND SHOULDER TREATMENT AT TBT TY.1 SPL.
BD-36	FIRE HYDRANT TO BE MOVED
BD-51	BENCHING DETAIL FOR EMBANKMENT WIDENING
BE-240	COMBINATION LIGHTING, TRAFFIC SIGNAL SCHEMATIC
TC-10	TRAFFIC CONTROL AND PROTECTION FOR SIDES ROADS, INTERSECTIONS, AND DRIVEWAYS
TC-11	TYPICAL APPLICATIONS RAISED REFLECTIVE PAVEMENT MARKERS (SNOW-PLOW RESISTANT)
TC-13	DISTRICT ONE TYPICAL PAVEMENT MARKINGS
TC-14	TRAFFIC CONTROL AND PROTECTION AT TURN BAYS (TO REMAIN OPEN TO TRAFFIC)
TC-16	SHORT TERM PAVEMENT MARKING LETTERS AND SYMBOLS
TC-22	ARTERIAL ROAD INFORMATION SIGN
TC-26	DRIVEWAY ENTRANCE SIGNING
TS-02	MAST ARM MOUNTED STREET NAME SIGNS
TS-05	DISTRICT ONE STANDARD TRAFFIC SIGNAL DESIGN DETAILS

IDOT HIGHWAY STANDARDS

000001-08	STANDARD SYMBOLS, ABBREVIATIONS AND PATTERNS
280001-07	TEMPORARY EROSION CONTROL SYSTEMS
420406	PAVEMENT CONNECTOR (HMA) FOR BRIDGE APPROACH SLAB
424001-12	PERPENDICULAR CURB RAMPS FOR SIDEWALKS
424006-06	DIAGONAL CURB RAMPS FOR SIDEWALKS
424011-05	CORNER PARALLEL CURB RAMPS FOR SIDEWALKS
424026-04	ENTRANCE / ALLEY PEDESTRIAN CROSSING
515001-04	NAME PLATE FOR BRIDGES
542301-03	PRECAST REINFORCED CONCRETE FLARED END SECTION
601001-05	PIPE UNDERDRAINS
602001-02	CATCH BASIN TYPE A
602301-04	INLET - TYPE A
602401-07	PRECAST MANHOLE, TYPE A, 4' (1.22 m) DIAMETER
602402-03	PRECAST MANHOLE, TYPE A, 5' (1.52 m) DIAMETER
602406-11	PRECAST MANHOLE, TYPE A, 6' (1.83 m) DIAMETER
602411-09	PRECAST MANHOLE, TYPE A, 7' (2.13 m) DIAMETER
602416-09	PRECAST MANHOLE, TYPE A, 8' (2.44 m) DIAMETER
602601-06	PRECAST REINFORCED CONCRETE FLAT SLAB TOP
602701-02	MANHOLE STEPS
604001-05	FRAME AND GRATE, TYPE 1
604056-04	FRAME AND GRATE, TYPE 11V
604071-07	FRAME AND GRATE, TYPE 20
606006-04	CONCRETE CURB TYPE B AND COMBINATION CONCRETE CURB AND GUTTER
606301-04	PC CONCRETE ISLANDS AND MEDIANS
701006-05	OFF-RD OPERATIONS, 2L, 2W, 15' (4.5 m) TO 24" (600 mm) FROM PAVEMENT EDGE
701101-05	OFF-RD OPERATIONS, MULTILANE, 15' (4.5 m) TO 24" (600 mm) FROM PAVEMENT EDGE
701301-04	LANE CLOSURE, 2L 2W, SHORT TIME OPERATIONS
701311-03	LANE CLOSURE, 2L 2W, MOVING OPERATIONS DAY ONLY
701427-05	LANE CLOSURE MULTILANE INTERMITTENT OR MOVING OPERATIONS 40MPH OR LESS
701501-06	URBAN LANE CLOSURE, 2L, 2W, UNDIVIDED
701502-09	URBAN LANE CLOSURE, MULTILANE, 2W WITH BIDIRECTIONAL LEFT TURN LANE
701602-10	URBAN LANE CLOSURE, 2L 2W WITH BIDIRECTIONAL LEFT TURN LANE
701611-01	URBAN LANE CLOSURE, MULTILANE, 2W WITH MOUNTABLE MEDIAN
701701-10	URBAN LANE CLOSURE, MULTILANE INTERSECTION
701801-06	SIDEWALK CORNER OR CROSSWALK CLOSURE
701901-10	TRAFFIC CONTROL DEVICES
704001-08	TEMPORARY CONCRETE BARRIER
720001-01	SIGN PANEL MOUNTING DETAILS
720006-04	SIGN PANEL ERECTION DETAILS
729001-01	APPLICATIONS OF TYPES A AND B METAL POSTS (FOR SIGNS AND MARKERS)
782006-01	GUARDRAIL AND BARRIER WALL RELFECTOR MOUNTING DETAILS
814001-03	HANDHOLES
814006-03	DOUBLE HANDHOLES
857001-01	STANDARD PHASE DESIGNATION DIAGRAMS AND PHASE SEQUENCES
862001-01	UNINTERRUPTABLE POWER SUPPLY (UPS)
877011-10	STEEL COMBINATION MAST ARM ASSEMBLY AND POLE 16' THROUGH 55'
877012-07	STEEL COMBINATION MAST ARM ASSEMBLY AND POLE 55' THROUGH 75'
880001-01	SPAN WIRE MOUNTED SIGNALS AND FLASHING BEACON INSTALLATION
880006-01	TRAFFIC SIGNAL MOUNTING DETAILS

GENERAL NOTES

1. ALL CONSTRUCTION SHALL BE DONE IN ACCORDANCE WITH THE STANDARD SPECIFICATIONS FOR ROAD AND BRIDGE CONSTRUCTION ADOPTED JANURARY 1, 2022 HEREIN AFTER REFERRED TO AS THE STANDARD SPECIFICATIONS; THE SUPPLEMENTAL SPECIFICATIONS AND RECURRING SPECIAL PROVISIONS ADOPTED JANUARY 1, 2025; THE LATEST EDITION OF THE ILLINOIS MANUAL ON UNIFORM TRAFFIC CONTROL DEVICES FOR STREETS AND HIGHWAYS; THE STANDARD SPECIFICATIONS FOR WATER & SEWER MAIN CONSTRUCTION IN ILLINOIS, LATEST EDITION; THE DETAILS IN THE PLANS; AND THE SPECIAL PROVISIONS INCLUDED IN THE CONTRACT DOCUMENTS.

2. THE CONTRACTOR SHALL BE REQUIRED TO PROVIDE ACCESS TO ADJACENT PROPERTY AT ALL TIMES DURING THE CONSTRUCTION OF THE PROJECT.

3. BEFORE STARTING ANY EXCAVATION, THE CONTRACTOR SHALL CALL "JULIE" AT 1-800-892-0123 OR 811 FOR FIELD LOCATIONS OF BURIED ELECTRIC, TELEPHONE, AND GAS FACILITIES. (48 HOUR NOTIFICATION REQUIRED).

4. THE CONTRACTOR SHALL COORDINATE ALL CONSTRUCTION ACTIVITIES WITH ALL UTILITY COMPANIES, THE VILLAGE OF ORLAND PARK AND ALL IMPACTED PROPERTY OWNERS.

5. TEN (10) FOOT LONG TRANSITIONS SHALL BE USED TO MATCH PROPOSED CURB AND GUTTER TO EXISTING CURB AND GUTTER UNLESS OTHERWISE SHOWN ON THE PLANS.

6. WHEN MILLED PAVEMENT IS OPEN TO TRAFFIC, THE MAXIMUM GRADE DIFFERENTIAL BETWEEN PASSES OF THE MILLING MACHINE SHALL NOT EXCEED 1 1/2 INCHES. A MAXIMUM GRADE DIFFERENTIAL OF 3 INCHES MAY BE ALLOWED IF THE EDGE OF THE MILLING IS SLOPED AT A MINIMUM 1:3 (V:H) WITH WRITTEN APPROVAL FROM THE ENGINEER.

7. BUTT JOINTS SHALL BE INSTALLED AT THE ENDS OF ALL RESURFACING (WHERE RESURFACING MEETS EXISTING PAVEMENT), IN ACCORDANCE WITH THE "BUTT JOINT AND HMA TAPER DETAILS" SHEET INCLUDED IN THE PLANS, UNLESS OTHERWISE SPECIFIED.

8. SAW CUTTING OF PAVEMENT, SHOULDERS, ETC. SHALL BE TO FULL DEPTH AND SHALL RESULT IN CLEAN, STRAIGHT EDGES ON THE PORTIONS REMAINING.

9. IT SHALL BE THE CONTRACTOR'S RESPONSIBILITY TO VERIFY ALL DIMENSIONS AND EXISTING CONDITIONS IN THE FIELD PRIOR TO CONSTRUCTION ACTIVITIES AND ORDERING OF MATERIAL.

10. DO NOT SCALE PLANS FOR CONSTRUCTION DIMENSIONS.

11. THE CONTRACTOR SHALL FIELD VERIFY THE INVERTS OF ALL EXISTING AND PROPOSED CULVERTS AND STORM SEWERS PRIOR TO STARTING CONSTRUCTION ACTIVITIES. THIS INFORMATION SHALL BE PROVIDED TO THE VILLAGE.

12. THE SUBGRADE STABILITY SHALL BE VERIFIED BY PROOF ROLLING WITH A FULLY LOADED TANDEM-AXLE TRUCK.

13. GEOTECHNICAL FABRIC FOR GROUND STABILIZATION AND/OR AGGREGATE SUBGRADE IMPROVEMENT (CU YD) HAS BEEN PROVIDED FOR USE AT THE LOCATIONS INDICATED FOR SOILS THAT TEND TO BE UNSTABLE AND/OR UNSUITABLE. THE ACTUAL NEED FOR REMOVAL AND REPLACEMENT WITH ABOVE ITEM WILL BE DETERMINED IN THE FIELD AT THE TIME OF CONSTRUCTION BY THE GEOTECHNICAL ENGINEER. ALL POTENTIALLY UNSTABLE SOILS SHOULD BE TESTED WITH A STATIC OR DYNAMIC CONE PENETROMETER AND TREATED IN ACCORDINACE WITH ARTICLE 301.04 OF THE STANDARD SPECIFICATIONS AND IDOT SUBGRADE STABILITY MANUAL. IF UNSTABLE AND/OR UNSUITABLE SOILS ARE NOT ENCOUNTERED, THEN THE QUANTITY SHALL BE DEDUCTED AND NO ADDITIONAL COMPENSATION WILL BE DUE TO THE CONTRACTOR.

14. BACKFILLING STORM SEWER CONSTRUCTED UNDER THE ROADWAY SPECIFIED UNDER ART. 550.07(b, c) OF THE SSRBC WILL NOT BE ALLOWED.

15. ANY AGGREGATE SUBGRADE IMPROVEMENT CONTAMINATED AND/OR DAMAGED BY THE CONTRACTOR'S VEHICLES AND/OR EQUIPMENTS IS TO BE REMOVED AND REPLACED AS DIRECT BY THE ENGINEER AT CONTRACTOR EXPENSE.

16. THE AGGREGATE GRADATION FOR THE AGGREGATE SUBGRADE IMPROVEMENT 12" LOWER LIFT SHALL BE CS 1 OR RR 1.

17. THE HORIZONTAL AND VERTICAL LOCATIONS OF EXISTING UTILITIES, AS SHOWN ON THE DRAWINGS, REPRESENT DATA RECEIVED FROM VARIOUS SOURCES. IT IS NOT GUARANTEED TO BE CORRECT OR ALL INCLUSIVE. THE CONTRACTOR SHALL CONDUCT HIS/HER OWN INVESTIGATIONS INTO THE LOCATION, SIZE, DEPTH AND NATURE OF ANY AND ALL EXISTING UTILITIES WHICH MAY INTERFERE WITH THE WORK UNDER THIS CONTRACT. ANY EXISTING UTILITIES WHICH ARE TO REMAIN IN SERVICE SHALL BE FULLY PROTECTED BY THE CONTRACTOR AND ANY DAMAGE CAUSED BY THE CONSTRUCTION OPERATIONS SHALL BE IMMEDIATELY REPAIRED OR REPLACED UNDER THE UTILITY OWNER'S DIRECTION.

18. PIPE UNDERDRAINS SHALL BE INSTALLED ACCORDING TO SECTION 601 OF THE STANDARD SPECIFICATIONS AND STANDARD 606001-05. TOP OF PIPE UNDERDRAINS SHALL BE MINIMUM OF 6" BELOW THE AGGREGADE SUBGRADE LAYER. THE COST OF MAKING UNDERDRAINS CONNECTIONS TO DRAINAGE STRUCTURES SHALL BE INCLUDED IN THE COSTS OF THE PIPE UNDERDRAINS.

A. REFERENCED SPECIFICATIONS

1. ALL CONSTRUCTION SHALL BE IN ACCORDANCE WITH THE APPLICABLE SECTIONS OF THE FOLLOWING, EXCEPT AS MODIFIED HEREIN OR ON THE PLANS:
   * STANDARD SPECIFICATIONS FOR ROAD AND BRIDGE CONSTRUCTION (LATEST EDITION), BY THE ILLINOIS DEPARTMENT OF TRANSPORTATION (IDOT SS) FOR ALL IMPROVEMENTS EXCEPT SANITARY SEWER AND WATER MAIN CONSTRUCTION;
   * STANDARD SPECIFICATIONS FOR WATER AND SEWER MAIN CONSTRUCTION IN ILLINOIS, LATEST EDITION (SSWS) FOR SANITARY SEWER AND WATER MAIN CONSTRUCTION;
   * VILLAGE OF ORLAND PARK MUNICIPAL CODE;
   * THE METROPOLITAN WATER RECLAMATION DISTRICT OF GREATER CHICAGO (MWRD) WATERSHED MANAGEMENT ORDINANCE AND TECHNICAL GUIDANCE MANUAL;
   * IN CASE OF CONFLICT BETWEEN THE APPLICABLE ORDINANCES NOTED, THE MORE STRINGENT SHALL TAKE PRECEDENCE AND SHALL CONTROL ALL CONSTRUCTION.

B. NOTIFICATIONS

1. THE MWRD LOCAL SEWER SYSTEMS SECTION FIELD OFFICE MUST BE NOTIFIED AT LEAST TWO (2) WORKING DAYS PRIOR TO THE COMMENCEMENT OF ANY WORK (CALL 708-588-4055 OR SEND EMAIL NOTIFICATION WITH PROJECT NAME, LOCATION AND PERMIT NUMBER TO WMOJOBSTART@MWRD.ORG).

2. THE VILLAGE OF ORLAND PARK ENGINEERING DEPARTMENT AND PUBLIC MUST BE NOTIFIED AT LEAST 24 HOURS PRIOR TO THE START OF CONSTRUCTION AND PRIOR TO EACH PHASE OF WORK. CONTRACTOR SHALL DETERMINE ITEMS REQUIRING INSPECTION PRIOR TO START OF CONSTRUCTION OR EACH WORK PHASE.

3. THE CONTRACTOR SHALL NOTIFY ALL UTILITY COMPANIES PRIOR TO BEGINNING CONSTRUCTION FOR THE EXACT LOCATIONS OF UTILITIES AND FOR THEIR PROTECTION DURING CONSTRUCTION. IF EXISTING UTILITIES ARE ENCOUNTERED THAT CONFLICT IN LOCATION WITH NEW CONSTRUCTION, IMMEDIATELY NOTIFY THE ENGINEER SO THAT THE CONFLICT CAN BE RESOLVED. CALL J.U.L.I.E. AT 1-800-892-0123.

C. GENERAL NOTES

1. ALL ELEVATIONS SHOWN ON PLANS REFERENCE THE NORTH AMERICAN VERTICAL DATUM OF 1988 (NAVD88). CONVERSION FACTOR IS __N/A__ FT.

2. MWRD, THE MUNICIPALITY AND THE OWNER OR OWNER'S REPRESENTATIVE SHALL HAVE THE AUTHORITY TO INSPECT, APPROVE, AND REJECT THE CONSTRUCTION IMPROVEMENTS.

3. THE CONTRACTOR(S) SHALL INDEMNIFY THE OWNER, ENGINEER, MUNICIPALITY, MWRD, AND THEIR AGENTS, ETC., FROM ALL LIABILITY INVOLVED WITH THE CONSTRUCTION, INSTALLATION, OR TESTING OF THIS WORK ON THE PROJECT.

4. THE PROPOSED IMPROVEMENTS MUST BE CONSTRUCTED IN ACCORDANCE WITH THE ENGINEERING PLANS AS APPROVED BY MWRD AND THE MUNICIPALITY UNLESS CHANGES ARE APPROVED BY MWRD, THE MUNICIPALITY, OR AUTHORIZED AGENT. THE CONSTRUCTION DETAILS, AS PRESENTED ON THE PLANS, MUST BE FOLLOWED. PROPER CONSTRUCTION TECHNIQUES MUST BE FOLLOWED ON THE IMPROVEMENTS INDICATED ON THE PLANS.

5. THE LOCATION OF VARIOUS UNDERGROUND UTILITIES WHICH ARE SHOWN ON THE PLANS ARE FOR INFORMATION ONLY AND REPRESENT THE BEST KNOWLEDGE OF THE ENGINEER. VERIFY LOCATIONS AND ELEVATIONS PRIOR TO BEGINNING THE CONSTRUCTION OPERATIONS.

6. ANY EXISTING PAVEMENT, SIDEWALK, DRIVEWAY, ETC., DAMAGED DURING CONSTRUCTION OPERATIONS AND NOT CALLED FOR TO BE REMOVED SHALL BE REPLACED AT THE EXPENSE OF THE CONTRACTOR.

7. MATERIAL AND COMPACTION TESTING SHALL BE PERFORMED IN ACCORDANCE WITH THE REQUIREMENTS OF THE MUNICIPALITY, MWRD, AND OWNER.

8. THE UNDERGROUND CONTRACTOR SHALL MAKE ALL NECESSARY ARRANGEMENTS TO NOTIFY ALL INSPECTION AGENCIES.

9. ALL NEW AND EXISTING UTILITY STRUCTURES ON SITE AND IN AREAS DISTURBED DURING CONSTRUCTION SHALL BE ADJUSTED TO FINISH GRADE PRIOR TO FINAL INSPECTION.

10. RECORD DRAWINGS SHALL BE KEPT BY THE CONTRACTOR AND SUBMITTED TO THE ENGINEER AS SOON AS UNDERGROUND IMPROVEMENTS ARE COMPLETED. FINAL PAYMENTS TO THE CONTRACTOR SHALL BE HELD UNTIL THEY ARE RECEIVED. ANY CHANGES IN LENGTH, LOCATION OR ALIGNMENT SHALL BE SHOWN IN RED. ALL WYES OR BENDS SHALL BE LOCATED FROM THE DOWNSTREAM MANHOLE. ALL VALVES, B-BOXES, TEES OR BENDS SHALL BE TIED TO A FIRE HYDRANT.

D. SANITARY SEWER

1. THE CONTRACTOR SHALL TAKE MEASURES TO PREVENT ANY POLLUTED WATER, SUCH AS GROUND AND SURFACE WATER, FROM ENTERING THE EXISTING SANITARY SEWERS.

2. A WATER-TIGHT PLUG SHALL BE INSTALLED IN THE DOWNSTREAM SEWER PIPE AT THE POINT OF SEWER CONNECTION PRIOR TO COMMENCING ANY SEWER CONSTRUCTION. THE PLUG SHALL REMAIN IN PLACE UNTIL REMOVAL IS AUTHORIZED BY THE MUNICIPALITY AND/OR MWRD AFTER THE SEWERS HAVE BEEN TESTED AND ACCEPTED.

3. DISCHARGING ANY UNPOLLUTED WATER INTO THE SANITARY SEWER SYSTEM FOR THE PURPOSE OF SEWER FLUSHING OF LINES FOR THE DEFLECTION TEST SHALL BE PROHIBITED WITHOUT PRIOR APPROVAL FROM THE MUNICIPALITY OR MWRD.

4. ALL SANITARY SEWER CONSTRUCTION SHALL BE IN ACCORDANCE WITH THE STANDARD SPECIFICATIONS FOR WATER AND SEWER MAIN CONSTRUCTION IN ILLINOIS (LATEST EDITION).

5. ALL FLOOR DRAINS SHALL DISCHARGE TO THE SANITARY SEWER SYSTEM.

6. ALL DOWNSPOUTS AND FOOTING DRAINS SHALL DISCHARGE TO THE STORM SEWER SYSTEM.

7. ALL SANITARY SEWER PIPE MATERIALS AND JOINTS (AND STORM SEWER PIPE MATERIALS AND JOINTS IN A COMBINED SEWER AREA) SHALL CONFORM TO THE FOLLOWING:

PIPE MATERIAL	PIPE SPECIFICATIONS	JOINT SPECIFICATIONS
VITRIFIED CLAY PIPE	ASTM C-700	ASTM C-425
REINFORCED CONCRETE SEWER PIPE	ASTM C-76	ASTM C-443
CAST IRON SOIL PIPE	ASTM A-74	ASTM C-564
DUCTILE IRON PIPE	ANSI A21.51	ANSI A21.11
POLYVINYL CHLORIDE (PVC) PIPE		
6-INCH TO 15-INCH DIAMETER SDR 26	ASTM D-3034	ASTM D-3212
18-INCH TO 27-INCH DIAMETER F/DY=46	ASTM F-679	ASTM D-3212
HIGH DENSITY POLYETHYLENE (HDPE)	ASTM D-3350 ASTM D-3035	ASTM D-3261,F-2620 (HEAT FUSION) ASTM D-3212,F-477 (GASKETED)
WATER MAIN QUALITY PVC		
4-INCH TO 36-INCH	ASTM D-2241	ASTM D-3139
4-INCH TO 12-INCH	AWWA C900	ASTM D-3139
14-INCH TO 48-INCH	AWWA C905	ASTM D-3139

THE FOLLOWING MATERIALS ARE ALLOWED ON A QUALIFIED BASIS SUBJECT TO DISTRICT REVIEW AND APPROVAL PRIOR TO PERMIT ISSUANCE. A SPECIAL CONDITION WILL BE ADDED TO THE PERMIT WHEN THE PIPE MATERIAL BELOW IS USED FOR SEWER CONSTRUCTION OR A CONNECTION IS MADE.

PIPE MATERIAL	PIPE SPECIFICATIONS	JOINT SPECIFICATIONS
POLYPROPYLENE (PP) PIPE		
12-INCH TO 24-INCH DOUBLE WALL	ASTM F-2736	D-3212, F-477
30-INCH TO 60-INCH TRIPLE WALL	ASTM F-2764	D3212, F-477

8. ALL SANITARY SEWER CONSTRUCTION (AND STORM SEWER CONSTRUCTION IN COMBINED SEWER AREAS), REQUIRES STONE BEDDING WITH STONE ¼ " TO 1" IN SIZE, WITH MINIMUM BEDDING THICKNESS EQUAL TO ¼ THE OUTSIDE DIAMETER OF THE SEWER PIPE, BUT NOT LESS THAN FOUR (4) INCHES NOR MORE THAN EIGHT (8) INCHES. MATERIAL SHALL BE CA-7, CA-11 OR CA-13 AND SHALL BE EXTENDED AT LEAST 12" ABOVE THE TOP OF THE PIPE WHEN USING PVC.

9. NON-SHEAR FLEXIBLE-TYPE COUPLINGS SHALL BE USED IN THE CONNECTION OF SEWER PIPES OF DISSIMILAR PIPE MATERIALS.

10. ALL MANHOLES SHALL BE PROVIDED WITH BOLTED, WATERTIGHT COVERS. SANITARY LIDS SHALL BE CONSTRUCTED WITH A CONCEALED PICKHOLE AND WATERTIGHT GASKET WITH THE WORD "SANITARY" CAST INTO THE LID.

11. WHEN CONNECTING TO AN EXISTING SEWER MAIN BY MEANS OTHER THAN AN EXISTING WYE, TEE, OR AN EXISTING MANHOLE, ONE OF THE FOLLOWING METHODS SHALL BE USED:
    a) A CIRCULAR SAW-CUT OF SEWER MAIN BY PROPER TOOLS ("SHEWER-TAP" MACHINE OR SIMILAR) AND PROPER INSTALLATION OF HUBWYE SADDLE OR HUB-TEE SADDLE.
    b) REMOVE AN ENTIRE SECTION OF PIPE (BREAKING ONLY THE TOP OF ONE BELL) AND REPLACE WITH A WYE OR TEE BRANCH SECTION.
    c) WITH PIPE CUTTER, NEATLY AND ACCURATELY CUT OUT DESIRED LENGTH OF PIPE FOR INSERTION OF PROPER FITTING, USING "BAND SEAL" OR SIMILAR COUPLINGS TO HOLD IT FIRMLY IN PLACE.

12. WHENEVER A SANITARY/COMBINED SEWER CROSSES UNDER A WATERMAIN, THE MINIMUM VERTICAL DISTANCE FROM THE TOP OF THE SEWER TO THE BOTTOM OF THE WATERMAIN SHALL BE 18 INCHES. FURTHERMORE, A MINIMUM HORIZONTAL DISTANCE OF 10 FEET BETWEEN SANITARY/COMBINED SEWERS AND WATERMAINS SHALL BE MAINTAINED UNLESS: THE SEWER IS LAID IN A SEPARATE TRENCH, KEEPING A MINIMUM 18" VERTICAL SEPARATION; OR THE SEWER IS LAID IN THE SAME TRENCH WITH THE WATERMAIN LOCATED AT THE OPPOSITE SIDE ON A BENCH OF UNDISTURBED EARTH, KEEPING A MINIMUM 18" VERTICAL SEPARATION. IF EITHER THE VERTICAL OR HORIZONTAL DISTANCES DESCRIBED CANNOT BE MAINTAINED, OR THE SEWER CROSSES ABOVE THE WATER MAIN, THE SEWER SHALL BE CONSTRUCTED TO WATER MAIN STANDARDS OR IT SHALL BE ENCASED WITH A WATER MAIN QUALITY CARRIER PIPE WITH THE ENDS SEALED.

13. ALL EXISTING SEPTIC SYSTEMS SHALL BE ABANDONED. ABANDONED TANKS SHALL BE FILLED WITH GRANULAR MATERIAL OR REMOVED.

14. ALL SANITARY MANHOLES, (AND STORM MANHOLES IN COMBINED SEWER AREAS), SHALL HAVE A MINIMUM INSIDE DIAMETER OF 48 INCHES, AND SHALL BE CAST IN PLACE OR PRE-CAST REINFORCED CONCRETE.

15. ALL SANITARY MANHOLES, (AND STORM MANHOLES IN COMBINED SEWER AREAS), SHALL HAVE PRECAST "RUBBER BOOTS" THAT CONFORM TO ASTM C-923 FOR ALL PIPE CONNECTIONS. PRECAST SECTIONS SHALL CONSIST OF MODIFIED GROOVE TONGUE AND RUBBER GASKET TYPE JOINTS.

16. ALL ABANDONED SANITARY SEWERS SHALL BE PLUGGED AT BOTH ENDS WITH AT LEAST 2 FEET LONG NON-SHRINK CONCRETE OR MORTAR PLUG.

17. EXCEPT FOR FOUNDATION/FOOTING DRAINS PROVIDED TO PROTECT BUILDINGS, OR PERFORATED PIPES ASSOCIATED WITH VOLUME CONTROL FACILITIES, DRAIN TILES/FIELD TILES/UNDERDRAINS/PERFORATED PIPES ARE NOT ALLOWED TO BE CONNECTED TO OR TRIBUTARY TO COMBINED SEWERS, SANITARY SEWERS, OR STORM SEWERS TRIBUTARY TO COMBINED SEWERS IN COMBINED SEWER AREAS. CONSTRUCTION OF NEW FACILITIES OF THIS TYPE IS PROHIBITED; AND ALL EXISTING DRAIN TILES AND PERFORATED PIPES ENCOUNTERED WITHIN THE PROJECT AREA SHALL BE PLUGGED OR REMOVED, AND SHALL NOT BE CONNECTED TO COMBINED SEWERS, SANITARY SEWERS, OR STORM SEWERS TRIBUTARY TO COMBINED SEWERS.

18. A BACKFLOW PREVENTER IS REQUIRED FOR ALL DETENTION BASINS TRIBUTARY TO COMBINED SEWERS. REQUIRED BACKFLOW PREVENTERS SHALL BE INSPECTED AND EXERCISED ANNUALLY BY THE PROPERTY OWNER TO ENSURE PROPER OPERATION, AND ANY NECESSARY MAINTENANCES SHALL BE PERFORMED TO ENSURE FUNCTIONALITY. IN THE EVENT OF A SEWER SURCHARGE INTO AN OPEN DETENTION BASIN TRIBUTARY TO COMBINED SEWERS, THE PERMITTEE SHALL ENSURE THAT CLEAN UP AND WASH OUT OF SEWAGE TAKES PLACE WITHIN 48 HOURS OF THE STORM EVENT.

E. EROSION AND SEDIMENT CONTROL

1. THE CONTRACTOR SHALL INSTALL THE EROSION AND SEDIMENT CONTROL DEVICES AS SHOWN ON THE APPROVED EROSION AND SEDIMENT CONTROL PLAN.

2. EROSION AND SEDIMENT CONTROL PRACTICES SHALL BE FUNCTIONAL PRIOR TO HYDROLOGIC DISTURBANCE OF THE SITE.

3. ALL DESIGN CRITERIA, SPECIFICATIONS, AND INSTALLATION OF EROSION AND SEDIMENT CONTROL PRACTICES SHALL BE IN ACCORDANCE WITH THE ILLINOIS URBAN MANUAL.

4. A COPY OF THE APPROVED EROSION AND SEDIMENT CONTROL PLAN SHALL BE MAINTAINED ON THE SITE AT ALL TIMES.

5. INSPECTIONS AND DOCUMENTATION SHALL BE PERFORMED, AT A MINIMUM:
   a) UPON COMPLETION OF INITIAL EROSION AND SEDIMENT CONTROL MEASURES, PRIOR TO ANY SOIL DISTURBANCE.
   b) ONCE EVERY SEVEN (7) CALENDAR DAYS AND WITHIN 24 HOURS OF THE END OF A STORM EVENT WITH GREATER THAN 0.5 INCH OF RAINFALL OR LIQUID EQUIVALENT PRECIPITATION.

6. SOIL DISTURBANCE SHALL BE CONDUCTED IN SUCH A MANNER AS TO MINIMIZE EROSION. IF STRIPPING, CLEARING, GRADING, OR LANDSCAPING ARE TO BE DONE IN PHASES, THE CO-PERMITTEE SHALL PLAN FOR APPROPRIATE SOIL EROSION AND SEDIMENT CONTROL MEASURES.

7. A STABILIZED MAT OF CRUSHED STONE MEETING THE STANDARDS OF THE ILLINOIS URBAN MANUAL SHALL BE INSTALLED AT ANY POINT WHERE TRAFFIC WILL BE ENTERING OR LEAVING A CONSTRUCTION SITE. SEDIMENT OR SOIL REACHING AN IMPROVED PUBLIC RIGHT-OF-WAY, STREET, ALLEY OR PARKING AREA SHALL BE REMOVED BY SCRAPING OR STREET CLEANING AS ACCUMULATIONS WARRANT AND TRANSPORTED TO A CONTROLLED SEDIMENT DISPOSAL AREA.

8. CONCRETE WASHOUT FACILITIES SHALL BE CONSTRUCTED IN ACCORDANCE WITH THE ILLINOIS URBAN MANUAL AND SHALL BE INSTALLED PRIOR TO ANY ON SITE CONSTRUCTION ACTIVITIES INVOLVING CONCRETE.

9. MORTAR WASHOUT FACILITIES SHALL BE CONSTRUCTED IN ADDITION TO CONCRETE WASHOUT FACILITIES FOR ANY BRICK AND MORTAR BUILDING ENVELOPE CONSTRUCTION ACTIVITIES.

10. TEMPORARY DIVERSIONS SHALL BE CONSTRUCTED AS NECESSARY TO DIRECT ALL RUNOFF FROM HYDROLOGICALLY DISTURBED AREAS TO AN APPROPRIATE SEDIMENT TRAP OR BASIN. VOLUME CONTROL FACILITIES SHALL NOT BE USED AS TEMPORARY SEDIMENT BASINS.

11. DISTURBED AREAS OF THE SITE WHERE CONSTRUCTION ACTIVITIES HAVE TEMPORARILY OR PERMANENTLY CEASED SHALL BE STABILIZED WITH TEMPORARY OR PERMANENT MEASURES WITHIN SEVEN (7) DAYS.

12. ALL FLOOD PROTECTION AREAS AND VOLUME CONTROL FACILITIES SHALL, AT A MINIMUM, BE PROTECTED WITH A DOUBLE-ROW OF SILT FENCE (OR EQUIVALENT).

13. VOLUME CONTROL FACILITIES SHALL NOT BE CONSTRUCTED UNTIL ALL OF THE CONTRIBUTING DRAINAGE AREA HAS BEEN STABILIZED.

14. SOIL STOCKPILES SHALL, AT A MINIMUM, BE PROTECTED WITH PERIMETER SEDIMENT CONTROLS. SOIL STOCKPILES SHALL NOT BE PLACED IN FLOOD PROTECTION AREAS OR THEIR BUFFERS.

15. EARTHEN EMBANKMENT SIDE SLOPES SHALL BE STABILIZED WITH APPROPRIATE EROSION CONTROL BLANKET.

16. STORM SEWERS THAT ARE OR WILL BE FUNCTIONING DURING CONSTRUCTION SHALL BE PROTECTED BY APPROPRIATE SEDIMENT CONTROL MEASURES.

17. THE CONTRACTOR SHALL EITHER REMOVE OR REPLACE ANY EXISTING DRAIN TILES AND INCORPORATE THEM INTO THE DRAINAGE PLAN FOR THE DEVELOPMENT. DRAIN TILES CANNOT BE TRIBUTARY TO A SANITARY OR COMBINED SEWER. DRAIN TILES ALLOWED IN COMBINED SEWER AREA FOR GREEN INFRASTRUCTURE PRACTICES.

18. IF DEWATERING SERVICES ARE USED, ADJOINING PROPERTIES AND DISCHARGE LOCATIONS SHALL BE PROTECTED FROM EROSION AND SEDIMENTATION. DEWATERING SYSTEMS SHOULD BE INSPECTED DAILY DURING OPERATIONAL PERIODS. THE SITE INSPECTOR MUST BE PRESENT AT THE COMMENCEMENT OF DEWATERING ACTIVITIES.

19. THE CONTRCTOR SHALL BE RESPONSIBLE FOR TRENCH DEWATERING AND EXCAVATION FOR THE INSTALLATION OF SANITARY SEWERS, STORM SEWERS, WATERMAINS AS WELL AS THEIR SERVICES AND OTHER APPURTENANCES. ANY TRENCH DEWATERING, WHICH CONTAINS SEDIMENT SHALL PASS THROUGH A SEDIMENT SETTLING POND OR EQUALLY EFFECTIVE SEDIMENT CONTROL DEVICE. ALTERNATIVES MAY INCLUDE DEWATERING INTO A SUMP PIT, FILTER BAG OR EXISTING VEGETATED UPSLOPE AREA. SEDIMENT LADEN WATERS SHALL NOT BE DISCHARGE TO WATERWAYS, FLOOD PROTECTION AREAS OR THE CONBINED SEWER SYSTEM.

20. ALL PERMANENT EROSION CONTROL PRACTICES SHALL BE INITIATED WITHIN SEVEN (7) DAYS FOLLOWING THE COMPLETION OF SOIL DISTURBING ACTIVITIES.

21. ALL EROSION AND SEDIMENT CONTROL MEASURES SHALL BE MAINTAINED AND REPAIRED AS NEEDED ON A YEAR-ROUND BASIS DURING CONSTRUCTION AND ANY PERIODS OF CONSTRUCTION SHUTDOWN UNTIL PERMANENT STABILIZATION IS ACHIEVED.

22. ALL TEMPORARY EROSION AND SEDIMENT CONTROL MEASURES SHALL BE REMOVED WITHIN THIRTY (30) DAYS AFTER PERMANENT SITE STABILIZATION.

23. THE EROSION AND SEDIMENT CONTROL MEASURES SHOWN ON THE PLANS ARE THE MINIMUM REQUIREMENTS. ADDITIONAL MEASURES MAY BE REQUIRED, AS DIRECTED BY THE ENGINEER, SITE INSPECTOR, OR MWRD.

TECHNICAL GUIDANCE MANUAL

MWRD GENERAL NOTES

10/13/2022

STD. DWG. NO.18

PLOT DRIVER = $PLTDRV$LS
PEN TABLE = $PENTBL$S
FILE NAME = pw:\\patrickco-pw.bentley.com:patrickco-pw-07\Documents\Orland Park\22277.005\12_Design\12-3_CADD\SHEETS\143HD-sht-MWRD-GeneralNotes.dgn

PATRICK ENGINEERING

USER NAME = dtroyer	DESIGNED -	REVISED -
	DRAWN -	REVISED -
PLOT SCALE = 20.0000 ' / in.	CHECKED -	REVISED -
PLOT DATE = 12/3/2024	DATE -	REVISED -

STATE OF ILLINOIS
DEPARTMENT OF TRANSPORTATION

JOHN HUMPHREY DRIVE AT 143RD STREET
MWRD GENERAL NOTES

SCALE: SHEET OF SHEETS STA. TO STA.

F.A.U. RTE.	SECTION	COUNTY	TOTAL SHEETS	SHEET NO.
2520	16-00078-00-CH	COOK	228	4

CONTRACT NO. 61K89

ILLINOIS FED. AID PROJECT

CODE NO.	ITEM	UNIT	TOTAL QUANTITY	80% FED / 20% LOCAL ROADWAY 0004 URBAN	80% FED / 20% LOCAL EX. DRYLAND BRIDGE 0013 URBAN	80% FED / 20% LOCAL TRAFFIC SIGNALS 0021 URBAN	100% LOCAL LIGHTING 0021 URBAN	100% LOCAL EVP 0021 URBAN	80% FED / 20% LOCAL TRAINEES 0042 URBAN	100% LOCAL UTILITY 0043 URBAN
20100210	TREE REMOVAL (OVER 15 UNITS DIAMETER)	UNIT	32	32						
20100500	TREE REMOVAL, ACRES	ACRE	0.50	0.50						
20101000	TEMPORARY FENCE	FOOT	411	411						
20101100	TREE TRUNK PROTECTION	EACH	24	24						
20200100	EARTH EXCAVATION	CU YD	2170	2170						
20201200	REMOVAL AND DISPOSAL OF UNSUITABLE MATERIAL	CU YD	1020	1020						
20400800	FURNISHED EXCAVATION	CU YD	2645	2645						
20700220	POROUS GRANULAR EMBANKMENT	CU YD	4433	4433						
20800150	TRENCH BACKFILL	CU YD	3865	3815						50
21001000	GEOTECHNICAL FABRIC FOR GROUND STABILIZATION	SQ YD	28581	28581						
21101505	TOPSOIL EXCAVATION AND PLACEMENT	CU YD	605	605						
21101615	TOPSOIL FURNISH AND PLACE, 4"	SQ YD	5428	5428						
25000210	SEEDING, CLASS 2A	ACRE	2.00	2.00						
25100630	EROSION CONTROL BLANKET	SQ YD	9661	9661						

* SPECIALITY ITEM

CODE NO.	ITEM	UNIT	TOTAL QUANTITY	80% FED / 20% LOCAL ROADWAY 0004 URBAN	80% FED / 20% LOCAL EX. DRYLAND BRIDGE 0013 URBAN	80% FED / 20% LOCAL TRAFFIC SIGNALS 0021 URBAN	100% LOCAL LIGHTING 0021 URBAN	100% LOCAL EVP 0021 URBAN	80% FED / 20% LOCAL TRAINEES 0042 URBAN	100% LOCAL UTILITY 0043 URBAN
28000305	TEMPORARY DITCH CHECKS	FOOT	75	75						
28000400	PERIMETER EROSION BARRIER	FOOT	5711	5711						
28000500	INLET AND PIPE PROTECTION	EACH	8	8						
28000510	INLET FILTERS	EACH	39	39						
30300001	AGGREGATE SUBGRADE IMPROVEMENT	CU YD	4391	4391						
30300112	AGGREGATE SUBGRADE IMPROVEMENT 12"	SQ YD	17564	17564						
31101100	SUBBASE GRANULAR MATERIAL, TYPE B	CU YD	1295	1295						
31101400	SUBBASE GRANULAR MATERIAL, TYPE B 6"	SQ YD	1408	1408						
35400400	PORTLAND CEMENT CONCRETE BASE COURSE WIDENING 9"	SQ YD	688	688						
35501308	HOT-MIX ASPHALT BASE COURSE, 6"	SQ YD	310	310						
40600275	BITUMINOUS MATERIALS (PRIME COAT)	POUND	32035	32035						
40600290	BITUMINOUS MATERIALS (TACK COAT)	POUND	13835	13835						
40600370	LONGITUDINAL JOINT SEALANT	FOOT	10733	10733						
40600400	MIXTURE FOR CRACKS, JOINTS, AND FLANGEWAYS	TON	5	5						

* SPECIALITY ITEM

CODE NO.	ITEM	UNIT	TOTAL QUANTITY	80% FED / 20% LOCAL ROADWAY 0004 URBAN	80% FED / 20% LOCAL EX. DRYLAND BRIDGE 0013 URBAN	80% FED / 20% LOCAL TRAFFIC SIGNALS 0021 URBAN	100% LOCAL LIGHTING 0021 URBAN	100% LOCAL EVP 0021 URBAN	80% FED / 20% LOCAL TRAINEES 0042 URBAN	100% LOCAL UTILITY 0043 URBAN
40600982	HOT-MIX ASPHALT SURFACE REMOVAL - BUTT JOINT	SQ YD	129	129						
40603085	HOT-MIX ASPHALT BINDER COURSE, IL-19.0, N70	TON	216	216						
40604060	HOT-MIX ASPHALT SURFACE COURSE, IL-9.5, MIX "D", N50	TON	41	41						
40604062	HOT-MIX ASPHALT SURFACE COURSE, IL-9.5, MIX "D", N70	TON	216	216						
40605026	POLYMERIZED HOT-MIX ASPHALT SURFACE COURSE, STONE MATRIX ASPHALT, 9.5, MIX "F", N80	TON	80		80					
40701881	HOT-MIX ASPHALT PAVEMENT (FULL-DEPTH), 10"	SQ YD	13830	13830						
42000070	PAVEMENT CONNECTOR (HMA) FOR BRIDGE APPROACH SLAB	SQ YD	54		54					
42300400	PORTLAND CEMENT CONCRETE DRIVEWAY PAVEMENT, 8 INCH	SQ YD	475	475						
42400200	PORTLAND CEMENT CONCRETE SIDEWALK 5 INCH	SQ FT	12668	12668						
42400800	DETECTABLE WARNINGS	SQ FT	81	81						
44000100	PAVEMENT REMOVAL	SQ YD	12562	12562						
44000161	HOT-MIX ASPHALT SURFACE REMOVAL, 3"	SQ YD	5523	5523						
44000200	DRIVEWAY PAVEMENT REMOVAL	SQ YD	483	483						
44000300	CURB REMOVAL	FOOT	123	123						

* SPECIALITY ITEM

CODE NO.	ITEM	UNIT	TOTAL QUANTITY	80% FED / 20% LOCAL ROADWAY 0004 URBAN	80% FED / 20% LOCAL EX. DRYLAND BRIDGE 0013 URBAN	80% FED / 20% LOCAL TRAFFIC SIGNALS 0021 URBAN	100% LOCAL LIGHTING 0021 URBAN	100% LOCAL EVP 0021 URBAN	80% FED / 20% LOCAL TRAINEES 0042 URBAN	100% LOCAL UTILITY 0043 URBAN
44000500	COMBINATION CURB AND GUTTER REMOVAL	FOOT	5025	5025						
44000600	SIDEWALK REMOVAL	SQ FT	9672	9672						
44003100	MEDIAN REMOVAL	SQ FT	1888	1888						
44201347	CLASS C PATCHES, TYPE IV, 9 INCH	SQ YD	195	195						
44213200	SAW CUTS	FOOT	2513	2513						
50102400	CONCRETE REMOVAL	CU YD	96	7	89					
50200100	STRUCTURE EXCAVATION	CU YD	8609	8609						
50300225	CONCRETE STRUCTURES	CU YD	514	497	17					
50300255	CONCRETE SUPERSTRUCTURE	CU YD	2		2					
50300300	PROTECTIVE COAT	SQ YD	19		19					
50301350	CONCRETE SUPERSTRUCTURE (APPROACH SLAB)	CU YD	75		75					
50500405	FURNISHING AND ERECTING STRUCTURAL STEEL	POUND	22470	22470						
50800105	REINFORCEMENT BARS	POUND	25280	25280						
50800205	REINFORCEMENT BARS, EPOXY COATED	POUND	31750	470	31280					

* SPECIALITY ITEM

CODE NO.	ITEM	UNIT	TOTAL QUANTITY	80% FED / 20% LOCAL ROADWAY 0004 URBAN	80% FED / 20% LOCAL EX. DRYLAND BRIDGE 0013 URBAN	80% FED / 20% LOCAL TRAFFIC SIGNALS 0021 URBAN	100% LOCAL LIGHTING 0021 URBAN	100% LOCAL EVP 0021 URBAN	80% FED / 20% LOCAL TRAINEES 0042 URBAN	100% LOCAL UTILITY 0043 URBAN
50800530	MECHANICAL SPLICERS*	EACH	14	14						
51200510	FURNISHING TREATED PILES 20.1 TO 38 FEET	FOOT	19635	19635						
51202305	DRIVING PILES	FOOT	19635	19635						
51202900	TEST PILE TIMBER	EACH	7	7						
52000110	PREFORMED JOINT STRIP SEAL	FOOT	54		54					
52200015	PERMANENT SHEET PILING	SQ FT	9094	9094						
52200020	TEMPORARY SOIL RETENTION SYSTEM	SQ FT	8227	8227						
54213657	PRECAST REINFORCED CONCRETE FLARED END SECTIONS 12"	EACH	1	1						
54213669	PRECAST REINFORCED CONCRETE FLARED END SECTIONS 24"	EACH	1	1						
54213681	PRECAST REINFORCED CONCRETE FLARED END SECTIONS 36"	EACH	1	1						
550A0050	STORM SEWERS, CLASS A, TYPE 1 12"	FOOT	287	287						
550A0070	STORM SEWERS, CLASS A, TYPE 1 15"	FOOT	195	195						
550A0120	STORM SEWERS, CLASS A, TYPE 1 24"	FOOT	69	69						
550A0160	STORM SEWERS, CLASS A, TYPE 1 36"	FOOT	370	370						

* SPECIALITY ITEM

CODE NO.	ITEM	UNIT	TOTAL QUANTITY	80% FED / 20% LOCAL ROADWAY 0004 URBAN	80% FED / 20% LOCAL EX. DRYLAND BRIDGE 0013 URBAN	80% FED / 20% LOCAL TRAFFIC SIGNALS 0021 URBAN	100% LOCAL LIGHTING 0021 URBAN	100% LOCAL EVP 0021 URBAN	80% FED / 20% LOCAL TRAINEES 0042 URBAN	100% LOCAL UTILITY 0043 URBAN
550A0210	STORM SEWERS, CLASS A, TYPE 1 60"	FOOT	8	8						
550A0340	STORM SEWERS, CLASS A, TYPE 2 12"	FOOT	221	221						
550A0360	STORM SEWERS, CLASS A, TYPE 2 15"	FOOT	743	743						
55100500	STORM SEWER REMOVAL 12"	FOOT	1460	1460						
55100700	STORM SEWER REMOVAL 15"	FOOT	10	10						
55100900	STORM SEWER REMOVAL 18"	FOOT	172	172						
55101200	STORM SEWER REMOVAL 24"	FOOT	86	86						
55101600	STORM SEWER REMOVAL 36"	FOOT	485	485						
* 56100050	DUCTILE IRON WATER MAIN TEE, 12" X 6"	EACH	2							2
* 56103000	DUCTILE IRON WATER MAIN 6"	FOOT	13							13
* 56103300	DUCTILE IRON WATER MAIN 12"	FOOT	443							443
* 56105200	WATER VALVES 12"	EACH	1							1
* 56109424	DUCTILE IRON WATER MAIN FITTINGS 12" 45.00 DEGREE BEND	EACH	6							6
* 56400500	FIRE HYDRANTS TO BE REMOVED	EACH	2							2

* SPECIALITY ITEM

CODE NO.	ITEM	UNIT	TOTAL QUANTITY	80% FED / 20% LOCAL ROADWAY 0004 URBAN	80% FED / 20% LOCAL EX. DRYLAND BRIDGE 0013 URBAN	80% FED / 20% LOCAL TRAFFIC SIGNALS 0021 URBAN	100% LOCAL LIGHTING 0021 URBAN	100% LOCAL EVP 0021 URBAN	80% FED / 20% LOCAL TRAINEES 0042 URBAN	100% LOCAL UTILITY 0043 URBAN
* 56400820	FIRE HYDRANT WITH AUXILIARY VALVE AND VALVE BOX	EACH	2							2
58100210	FULL LANE SEALANT WATERPROOFING SYSTEM	SQ YD	711		711					
59300100	CONTROLLED LOW-STRENGTH MATERIAL	CU YD	6	6						
60108204	PIPE UNDERDRAINS, TYPE 2, 4"	FOOT	2955	2955						
60146304	PIPE UNDERDRAINS FOR STRUCTURES 4"	FOOT	273	273						
60201110	CATCH BASINS, TYPE A, 4'-DIAMETER, TYPE 11V FRAME AND GRATE	EACH	13	13						
60201310	CATCH BASINS, TYPE A, 4'-DIAMETER, TYPE 20 FRAME AND GRATE	EACH	7	7						
60218400	MANHOLES, TYPE A, 4'-DIAMETER, TYPE 1 FRAME, CLOSED LID	EACH	3	3						
60221100	MANHOLES, TYPE A, 5'-DIAMETER, TYPE 1 FRAME, CLOSED LID	EACH	1	1						
60223800	MANHOLES, TYPE A, 6'-DIAMETER, TYPE 1 FRAME, CLOSED LID	EACH	1	1						
60224446	MANHOLES, TYPE A, 7'-DIAMETER, TYPE 1 FRAME, CLOSED LID	EACH	1	1						
60224459	MANHOLES, TYPE A, 8'-DIAMETER, TYPE 1 FRAME, CLOSED LID	EACH	1	1						
60236825	INLETS, TYPE A, TYPE 11V FRAME AND GRATE	EACH	11	11						
60237420	INLETS, TYPE A, TYPE 20 FRAME AND GRATE	EACH	5	5						

* SPECIALITY ITEM

PLOT DRIVER = SPEDRIVER
PEN TABLE = SPENTBLS
FILE NAME = pw:\\pwinsero.pw.bentley.com:pwinsero\Original Part\92237 005\2 Design\3 CADD\SHEETS\143HB-int-SOQ.dgn

PATRICK ENGINEERING

USER NAME = DT004	DESIGNED -	REVISED -	
	DRAWN -	REVISED -	
PLOT SCALE = 20.0000 ' / in.	CHECKED -	REVISED -	
PLOT DATE = 3/21/2025	DATE -	REVISED -	

STATE OF ILLINOIS
DEPARTMENT OF TRANSPORTATION

JOHN HUMPHREY DRIVE AT 143RD STREET
SUMMARY OF QUANTITIES

SCALE: | SHEET 7 OF 18 SHEETS | STA. TO STA.

F.A.U. RTE.	SECTION	COUNTY	TOTAL SHEETS	SHEET NO.
2520	16-00078-00-CH	COOK	228	11

CONTRACT NO. 61K89

ILLINOIS | FED. AID PROJECT

	CODE NO.	ITEM	UNIT	TOTAL QUANTITY	80% FED / 20% LOCAL ROADWAY 0004 URBAN	80% FED / 20% LOCAL EX. DRYLAND BRIDGE 0013 URBAN	80% FED / 20% LOCAL TRAFFIC SIGNALS 0021 URBAN	100% LOCAL LIGHTING 0021 URBAN	100% LOCAL EVP 0021 URBAN	80% FED / 20% LOCAL TRAINEES 0042 URBAN	100% LOCAL UTILITY 0043 URBAN
	60255800	MANHOLES TO BE ADJUSTED WITH NEW TYPE 1 FRAME, CLOSED LID	EACH	2	2						
	60256910	MANHOLES TO BE ADJUSTED WITH NEW TYPE 20 FRAME AND GRATE	EACH	3	3						
	60261510	INLETS TO BE ADJUSTED WITH NEW TYPE 20 FRAME AND GRATE	EACH	3	3						
*	60265700	VALVE VAULTS TO BE ADJUSTED	EACH	2							2
*	60266100	VALVE VAULTS TO BE RECONSTRUCTED	EACH	1							1
	60500040	REMOVING MANHOLES	EACH	15	15						
	60500050	REMOVING CATCH BASINS	EACH	6	6						
	60500060	REMOVING INLETS	EACH	17	17						
	60600605	CONCRETE CURB, TYPE B	FOOT	36	36						
	60603800	COMBINATION CONCRETE CURB AND GUTTER, TYPE B-6.12	FOOT	2118	2118						
	60605000	COMBINATION CONCRETE CURB AND GUTTER, TYPE B-6.24	FOOT	2665	2665						
	60619600	CONCRETE MEDIAN, TYPE SB-6.12	SQ FT	3835	3835						
	63200310	GUARDRAIL REMOVAL	FOOT	337	337						
*	66900200	NON-SPECIAL WASTE DISPOSAL	CU YD	2170	2170						

* SPECIALITY ITEM

	CODE NO.	ITEM	UNIT	TOTAL QUANTITY	80% FED / 20% LOCAL ROADWAY 0004 URBAN	80% FED / 20% LOCAL EX. DRYLAND BRIDGE 0013 URBAN	80% FED / 20% LOCAL TRAFFIC SIGNALS 0021 URBAN	100% LOCAL LIGHTING 0021 URBAN	100% LOCAL EVP 0021 URBAN	80% FED / 20% LOCAL TRAINEES 0042 URBAN	100% LOCAL UTILITY 0043 URBAN
*	66900530	SOIL DISPOSAL ANALYSIS	EACH	2	2						
*	66901001	REGULATED SUBSTANCES PRE-CONSTRUCTION PLAN	L SUM	1	1						
*	66901003	REGULATED SUBSTANCES FINAL CONSTRUCTION REPORT	L SUM	1	1						
*	66901006	REGULATED SUBSTANCES MONITORING	CAL DA	10	10						
	67000400	ENGINEER'S FIELD OFFICE, TYPE A	CAL MO	18	18						
	67100100	MOBILIZATION	L SUM	1	1						
	70307100	TEMPORARY PAVEMENT MARKING LETTERS AND SYMBOLS - TYPE IV TAPE	SQ FT	491	491						
	70307120	TEMPORARY PAVEMENT MARKING - LINE 4" - TYPE IV TAPE	FOOT	14871	14871						
	70307130	TEMPORARY PAVEMENT MARKING - LINE 6" - TYPE IV TAPE	FOOT	4285	4285						
	70307140	TEMPORARY PAVEMENT MARKING - LINE 8" - TYPE IV TAPE	FOOT	330	330						
	70307210	TEMPORARY PAVEMENT MARKING - LINE 24"- TYPE IV TAPE	FOOT	428	428						
	70400100	TEMPORARY CONCRETE BARRIER	FOOT	1384	1384						
	70400200	RELOCATE TEMPORARY CONCRETE BARRIER	FOOT	1384	1384						
	70600235	IMPACT ATTENUATORS, TEMPORARY (FULLY REDIRECTIVE), TEST LEVEL 2	EACH	8	8						

* SPECIALITY ITEM

	CODE NO.	ITEM	UNIT	TOTAL QUANTITY	80% FED / 20% LOCAL ROADWAY 0004 URBAN	80% FED / 20% LOCAL EX. DRYLAND BRIDGE 0013 URBAN	80% FED / 20% LOCAL TRAFFIC SIGNALS 0021 URBAN	100% LOCAL LIGHTING 0021 URBAN	100% LOCAL EVP 0021 URBAN	80% FED / 20% LOCAL TRAINEES 0042 URBAN	100% LOCAL UTILITY 0043 URBAN
	70600320	IMPACT ATTENUATORS, RELOCATE (FULLY REDIRECTIVE), TEST LEVEL 2	EACH	8	8						
*	72000100	SIGN PANEL - TYPE 1	SQ FT	84	54		30				
	72400200	REMOVE SIGN PANEL ASSEMBLY - TYPE B	EACH	4	4						
*	72900200	METAL POST - TYPE B	FOOT	98	98						
*	78000100	THERMOPLASTIC PAVEMENT MARKING - LETTERS AND SYMBOLS	SQ FT	656	656						
*	78000200	THERMOPLASTIC PAVEMENT MARKING - LINE 4"	FOOT	12995	12995						
*	78000400	THERMOPLASTIC PAVEMENT MARKING - LINE 6"	FOOT	3976	3976						
*	78000500	THERMOPLASTIC PAVEMENT MARKING - LINE 8"	FOOT	498	498						
*	78000650	THERMOPLASTIC PAVEMENT MARKING - LINE 24"	FOOT	188	188						
*	78100100	RAISED REFLECTIVE PAVEMENT MARKER	EACH	165	165						
	78300200	RAISED REFLECTIVE PAVEMENT MARKER REMOVAL	EACH	93	93						
	78300201	PAVEMENT MARKING REMOVAL - GRINDING	SQ FT	5329	5329						
	78300202	PAVEMENT MARKING REMOVAL - WATER BLASTING	SQ FT	7537	7537						
*	80400100	ELECTRIC SERVICE INSTALLATION	EACH	1				1			

* SPECIALITY ITEM

	CODE NO.	ITEM	UNIT	TOTAL QUANTITY	80% FED / 20% LOCAL ROADWAY 0004 URBAN	80% FED / 20% LOCAL EX. DRYLAND BRIDGE 0013 URBAN	80% FED / 20% LOCAL TRAFFIC SIGNALS 0021 URBAN	100% LOCAL LIGHTING 0021 URBAN	100% LOCAL EVP 0021 URBAN	80% FED / 20% LOCAL TRAINEES 0042 URBAN	100% LOCAL UTILITY 0043 URBAN
*	80400200	ELECTRIC UTILITY SERVICE CONNECTION	L SUM	1				1			
*	81028200	UNDERGROUND CONDUIT, GALVANIZED STEEL, 2" DIA.	FOOT	1064			1014	50			
*	81028220	UNDERGROUND CONDUIT, GALVANIZED STEEL, 3" DIA.	FOOT	684			44	640			
*	81028240	UNDERGROUND CONDUIT, GALVANIZED STEEL, 4" DIA.	FOOT	790			790				
*	81028740	UNDERGROUND CONDUIT, COILABLE NONMETALLIC CONDUIT, 1 1/2" DIA.	FOOT	4450				4450			
*	81400100	HANDHOLE	EACH	5			5				
*	81400200	HEAVY-DUTY HANDHOLE	EACH	3			3				
*	81400300	DOUBLE HANDHOLE	EACH	2			2				
*	81400730	HANDHOLE, COMPOSITE CONCRETE	EACH	3				3			
*	81702110	ELECTRIC CABLE IN CONDUIT, 600V (XLP-TYPE USE) 1/C NO. 10	FOOT	3955				3955			
*	81702130	ELECTRIC CABLE IN CONDUIT, 600V (XLP-TYPE USE) 1/C NO. 6	FOOT	33160				33160			
*	81702150	ELECTRIC CABLE IN CONDUIT, 600V (XLP-TYPE USE) 1/C NO. 2	FOOT	220				220			
*	81800240	AERIAL CABLE, 2-1/C NO. 8 WITH MESSENGER WIRE	FOOT	505				505			
*	81800340	AERIAL CABLE, 3-1/C NO. 8 WITH MESSENGER WIRE	FOOT	895				895			

* SPECIALITY ITEM

PLOT DRIVER = STLTDRW.tbl
PLOT TABLE = pw:\\patrickeng.com:pwprojects\Projects\Active\Projects\D1\Document\D1\Final Parts\72777\DHS\12_Design\12-3_CAD\SHEETS\143HD-SH-500.dgn
FILE NAME = pw:\\patrickeng.com:pwprojects\Projects\Active\Projects\D1\Document\D1\Final Parts\72777\DHS\12_Design\12-3_CAD\SHEETS\143HD-SH-500.dgn

PATRICK ENGINEERING

USER NAME = DT004	DESIGNED -	REVISED -	
	DRAWN -	REVISED -	
PLOT SCALE = 20.0000 ' / in.	CHECKED -	REVISED -	
PLOT DATE = 1/27/2025	DATE -	REVISED -	

STATE OF ILLINOIS
DEPARTMENT OF TRANSPORTATION

JOHN HUMPHREY DRIVE AT 143RD STREET
SUMMARY OF QUANTITIES

SCALE: | SHEET 13 OF 18 SHEETS | STA. TO STA.

F.A.U. RTE.	SECTION	COUNTY	TOTAL SHEETS	SHEET NO.
2520	16-00078-00-CH	COOK	228	15

CONTRACT NO. 61K89

ILLINOIS | FED. AID PROJECT

	CODE NO.	ITEM	UNIT	TOTAL QUANTITY	80% FED / 20% LOCAL ROADWAY 0004 URBAN	80% FED / 20% LOCAL EX. DRYLAND BRIDGE 0013 URBAN	80% FED / 20% LOCAL TRAFFIC SIGNALS 0021 URBAN	100% LOCAL LIGHTING 0021 URBAN	100% LOCAL EVP 0021 URBAN	80% FED / 20% LOCAL TRAINEES 0042 URBAN	100% LOCAL UTILITY 0043 URBAN
*	82500350	LIGHTING CONTROLLER, BASE MOUNTED, 240VOLT, 100AMP	EACH	1				1			
*	83057305	LIGHT POLE, WOOD, 55 FOOT, CLASS 3, WITH 15FT MAST ARM	EACH	3				3			
*	83600200	LIGHT POLE FOUNDATION, 24" DIAMETER	FOOT	120				120			
*	84200500	REMOVAL OF LIGHTING UNIT, SALVAGE	EACH	2				2			
*	84200804	REMOVAL OF POLE FOUNDATION	EACH	7				7			
*	84400105	RELOCATE EXISTING LIGHTING UNIT	EACH	5				5			
*	85000200	MAINTENANCE OF EXISTING TRAFFIC SIGNAL INSTALLATION	EACH	1			1				
*	85100500	PAINT NEW TRAFFIC SIGNAL POST	EACH	3			3				
*	85100800	PAINT NEW COMBINATION MAST ARM AND POLE, UNDER 40 FOOT	EACH	3			3				
*	85100901	PAINT NEW COMBINATION MAST ARM AND POLE, 40 FOOT AND OVER	EACH	3			3				
*	86400100	TRANSCEIVER - FIBER OPTIC	EACH	1			1				
*	87300925	ELECTRIC CABLE IN CONDUIT, TRACER, NO. 14 1C	FOOT	630			630				
*	87301215	ELECTRIC CABLE IN CONDUIT, SIGNAL NO. 14 2C	FOOT	1747			1747				
*	87301225	ELECTRIC CABLE IN CONDUIT, SIGNAL NO. 14 3C	FOOT	2621			2621				

* SPECIALITY ITEM

PLOT DATE = 5/7/2025
FILE NAME = pw:\\patrick-eng-w.bentley.com:pwidb\ceapw-DB\Documents\OD\Ford Park\02777.003\12_Design\12.3_CADD\SHEETS\143HD-sht-SQD.dgn

PATRICK ENGINEERING

USER NAME = DT004	DESIGNED -	REVISED -	
	DRAWN -	REVISED -	
PLOT SCALE = 20.0000 ' / in.	CHECKED -	REVISED -	
PLOT DATE = 1/22/2025	DATE -	REVISED -	

STATE OF ILLINOIS
DEPARTMENT OF TRANSPORTATION

JOHN HUMPHREY DRIVE AT 143RD STREET
SUMMARY OF QUANTITIES

SCALE: | SHEET 12 OF 18 SHEETS | STA. TO STA.

F.A.U. RTE.	SECTION	COUNTY	TOTAL SHEETS	SHEET NO.
2520	16-00078-00-CH	COOK	228	16
		CONTRACT NO. 61K89		
		ILLINOIS FED. AID PROJECT		

	CODE NO.	ITEM	UNIT	TOTAL QUANTITY	80% FED / 20% LOCAL ROADWAY 0004 URBAN	80% FED / 20% LOCAL EX. DRYLAND BRIDGE 0013 URBAN	80% FED / 20% LOCAL TRAFFIC SIGNALS 0021 URBAN	100% LOCAL LIGHTING 0021 URBAN	100% LOCAL EVP 0021 URBAN	80% FED / 20% LOCAL TRAINEES 0042 URBAN	100% LOCAL UTILITY 0043 URBAN
*	87301245	ELECTRIC CABLE IN CONDUIT, SIGNAL NO. 14 5C	FOOT	3404			3404				
*	87301255	ELECTRIC CABLE IN CONDUIT, SIGNAL NO. 14 7C	FOOT	1713			1713				
*	87301305	ELECTRIC CABLE IN CONDUIT, LEAD-IN, NO. 14 1 PAIR	FOOT	3844			3844				
*	87301805	ELECTRIC CABLE IN CONDUIT, SERVICE, NO. 6 2 C	FOOT	58			58				
*	87301900	ELECTRIC CABLE IN CONDUIT, EQUIPMENT GROUNDING CONDUCTOR, NO. 6 1C	FOOT	1377			1377				
*	87502500	TRAFFIC SIGNAL POST, GALVANIZED STEEL 16 FT.	EACH	2			2				
*	87702870	STEEL COMBINATION MAST ARM ASSEMBLY AND POLE 28 FT.	EACH	1			1				
*	87702910	STEEL COMBINATION MAST ARM ASSEMBLY AND POLE 36 FT.	EACH	1			1				
*	87702920	STEEL COMBINATION MAST ARM ASSEMBLY AND POLE 38 FT.	EACH	1			1				
*	87702930	STEEL COMBINATION MAST ARM ASSEMBLY AND POLE 40 FT.	EACH	1			1				
*	87702990	STEEL COMBINATION MAST ARM ASSEMBLY AND POLE 54 FT.	EACH	1			1				
*	87703040	STEEL COMBINATION MAST ARM ASSEMBLY AND POLE 62 FT.	EACH	1			1				
*	87800100	CONCRETE FOUNDATION, TYPE A	FOOT	12			12				
*	87800150	CONCRETE FOUNDATION, TYPE C	FOOT	4			4				

* SPECIALITY ITEM

PLOT DRIVER = SHTTRDW15
PEN TABLE = WPENTBL15
FILE NAME = pw:\\patrickco-pw.bentley.com:pwPatrickco-pw-DT\Documents\Orland Park\22777.009\12_Design\12.3_CAD\TS\SHEETS\143RD-STI-S000.dgn

PATRICK ENGINEERING

USER NAME = DT004	DESIGNED -	REVISED -
	DRAWN -	REVISED -
PLOT SCALE = 20.0000 ' / in.	CHECKED -	REVISED -
PLOT DATE = 1/27/2025	DATE -	REVISED -

STATE OF ILLINOIS
DEPARTMENT OF TRANSPORTATION

JOHN HUMPHREY DRIVE AT 143RD STREET
SUMMARY OF QUANTITIES

SCALE: | SHEET 13 OF 18 SHEETS | STA. TO STA.

F.A.U. RTE.	SECTION	COUNTY	TOTAL SHEETS	SHEET NO.
2520	16-00078-00-CH	COOK	228	17

CONTRACT NO. 61K89

ILLINOIS FED. AID PROJECT

	CODE NO.	ITEM	UNIT	TOTAL QUANTITY	80% FED / 20% LOCAL ROADWAY 0004 URBAN	80% FED / 20% LOCAL EX. DRYLAND BRIDGE 0013 URBAN	80% FED / 20% LOCAL TRAFFIC SIGNALS 0021 URBAN	100% LOCAL LIGHTING 0021 URBAN	100% LOCAL EVP 0021 URBAN	80% FED / 20% LOCAL TRAINEES 0042 URBAN	100% LOCAL UTILITY 0043 URBAN
*	87800415	CONCRETE FOUNDATION, TYPE E 36-INCH DIAMETER	FOOT	78			78				
*	87800420	CONCRETE FOUNDATION, TYPE E 42-INCH DIAMETER	FOOT	21			21				
*	87900200	DRILL EXISTING HANDHOLE	EACH	1			1				
*	88030020	SIGNAL HEAD, LED, 1-FACE, 3-SECTION, MAST-ARM MOUNTED	EACH	11			11				
*	88030050	SIGNAL HEAD, LED, 1-FACE, 3-SECTION, BRACKET MOUNTED	EACH	1			1				
*	88030100	SIGNAL HEAD, LED, 1-FACE, 5-SECTION, BRACKET MOUNTED	EACH	3			3				
*	88030110	SIGNAL HEAD, LED, 1-FACE, 5-SECTION, MAST-ARM MOUNTED	EACH	5			5				
*	88102717	PEDESTRIAN SIGNAL HEAD, LED, 1-FACE, BRACKET MOUNTED WITH COUNTDOWN TIMER	EACH	8			8				
*	88200410	TRAFFIC SIGNAL BACKPLATE, LOUVERED, FORMED PLASTIC	EACH	16			16				
*	88500100	INDUCTIVE LOOP DETECTOR	EACH	15			15				
*	88600100	DETECTOR LOOP, TYPE I	FOOT	1328			1328				
*	88700200	LIGHT DETECTOR	EACH	3					3		
*	88700300	LIGHT DETECTOR AMPLIFIER	EACH	1					1		
*	89000100	TEMPORARY TRAFFIC SIGNAL INSTALLATION	EACH	2			2				

* SPECIALITY ITEM

PATRICK ENGINEERING

USER NAME = DT004	DESIGNED -	REVISED -	
	DRAWN -	REVISED -	
PLOT SCALE = 20.0000 ' / in.	CHECKED -	REVISED -	
PLOT DATE = 1/27/2025	DATE -	REVISED -	

STATE OF ILLINOIS
DEPARTMENT OF TRANSPORTATION

JOHN HUMPHREY DRIVE AT 143RD STREET
SUMMARY OF QUANTITIES

SCALE: | SHEET 14 OF 18 SHEETS | STA. TO STA.

F.A.U. RTE.	SECTION	COUNTY	TOTAL SHEETS	SHEET NO.
2520	16-00078-00-CH	COOK	228	18
		CONTRACT NO. 61K89		
	ILLINOIS	FED. AID PROJECT		

PLOT DRIVER = STLTDRV15
PEN TABLE = PSCOLORLAS
FILE NAME = pw:\\patrick-corp.bentley.com:patrick-eas-pw02\Documents\10\Ford Park\72717.005\12_Design\12_3_CAD\SHEETS\143HD-sht-SQD.dgn

	CODE NO.	ITEM	UNIT	TOTAL QUANTITY	80% FED / 20% LOCAL ROADWAY 0004 URBAN	80% FED / 20% LOCAL EX. DRYLAND BRIDGE 0013 URBAN	80% FED / 20% LOCAL TRAFFIC SIGNALS 0021 URBAN	100% LOCAL LIGHTING 0021 URBAN	100% LOCAL EVP 0021 URBAN	80% FED / 20% LOCAL TRAINEES 0042 URBAN	100% LOCAL UTILITY 0043 URBAN
*	89502300	REMOVE ELECTRIC CABLE FROM CONDUIT	FOOT	1344			1344				
*	89502375	REMOVE EXISTING TRAFFIC SIGNAL EQUIPMENT	EACH	1			1				
*	89502380	REMOVE EXISTING HANDHOLE	EACH	9			9				
*	89502382	REMOVE EXISTING DOUBLE HANDHOLE	EACH	1			1				
*	89502385	REMOVE EXISTING CONCRETE FOUNDATION	EACH	9			9				
	K1004572	PRAIRIE SEEDING (SPECIAL)	ACRE	0.50	0.50						
*	X0324085	EMERGENCY VEHICLE PRIORITY SYSTEM LINE SENSOR CABLE, NO. 20 3/C	FOOT	872					872		
	X0325391	EXPANDED POLYSTYRENE FILL	CU YD	986	986						
*	X0327698	LED INTERNALLY ILLUMINATED STREET NAME SIGN	EACH	4			4				
*	X1400150	SERVICE INSTALLATION, GROUND MOUNTED, METERED	EACH	1			1				
*	X1400238	LUMINAIRE, LED, SPECIAL	EACH	13				13			
*	X1400268	REMOVAL OF LIGHTING LUMINAIRE, SALVAGE	EACH	5				5			
*	X1400367	PEDESTRIAN SIGNAL POST, 10 FT.	EACH	1			1				
*	X1400424	ELECTRIC CABLE IN CONDUIT, STREET NAME SIGN, NO. 14 3C, TYPE SOOW	FOOT	950			950				

* SPECIALITY ITEM

	CODE NO.	ITEM	UNIT	TOTAL QUANTITY	80% FED / 20% LOCAL ROADWAY 0004 URBAN	80% FED / 20% LOCAL EX. DRYLAND BRIDGE 0013 URBAN	80% FED / 20% LOCAL TRAFFIC SIGNALS 0021 URBAN	100% LOCAL LIGHTING 0021 URBAN	100% LOCAL EVP 0021 URBAN	80% FED / 20% LOCAL TRAINEES 0042 URBAN	100% LOCAL UTILITY 0043 URBAN
	X2010516	SELECTIVE CLEARING	UNIT	22	22						
*	X2080250	TRENCH BACKFILL (SPECIAL)	CU YD	2							2
	X3010104	BIAXIAL GEOGRID	SQ YD	3647	3647						
	X4021000	TEMPORARY ACCESS (PRIVATE ENTRANCE)	EACH	4	4						
	X4022000	TEMPORARY ACCESS (COMMERCIAL ENTRANCE)	EACH	2	2						
	X5510011	PROPOSED STORM SEWER CONNECTION TO EXISTING MANHOLE	EACH	5	5						
	X5510012	PROPOSED STORM SEWER CONNECTION TO EXISTING STORM SEWER	EACH	3	3						
*	X5610712	WATER MAIN REMOVAL, 12"	FOOT	443							443
*	X5630012	CUT AND CAP EXISTING 12" WATER MAIN	EACH	2							2
*	X5630712	CONNECTION TO EXISTING WATER MAIN 12"	EACH	1							1
	X6025604	PROPOSED MANHOLE/CATCH BASIN CONNECTION OVER EXISTING STORM SEWER	EACH	4	4						
	X7010216	TRAFFIC CONTROL AND PROTECTION, (SPECIAL)	L SUM	1	1						
	X7200061	TEMPORARY INFORMATION SIGNING	SQ FT	109.1	109.1						
	X7200062	TEMPORARY SIGNING	EACH	13	13						

* SPECIALITY ITEM

	CODE NO.	ITEM	UNIT	TOTAL QUANTITY	80% FED / 20% LOCAL ROADWAY 0004 URBAN	80% FED / 20% LOCAL EX. DRYLAND BRIDGE 0013 URBAN	80% FED / 20% LOCAL TRAFFIC SIGNALS 0021 URBAN	100% LOCAL LIGHTING 0021 URBAN	100% LOCAL EVP 0021 URBAN	80% FED / 20% LOCAL TRAINEES 0042 URBAN	100% LOCAL UTILITY 0043 URBAN
*	X8211008	TEMPORARY LUMINAIRE, LED, ROADWAY, OUTPUT DESIGNATION H	EACH	11				11			
*	X8250091	COMBINATION LIGHTING CONTROLLER	EACH	1				1			
*	X8250500	LIGHTING UNIT COMPLETE (SPECIAL)	EACH	8				8			
*	X8301115	MAST ARM,STREET LIGHTING,15'	EACH	8				8			
*	X8301802	REMOVE TEMPORARY WOOD POLE	EACH	2				2			
*	X8302161	TEMPORARY WOOD POLE, 60 FT., CLASS 4	EACH	2				2			
*	X8360215	LIGHT POLE FOUNDATION, 24" DIAMETER, OFFSET	FOOT	40				40			
*	X8400102	MAINTENANCE OF LIGHTING SYSTEM	EACH	12				12			
*	X8410107	REMOVE TEMPORARY LIGHTING UNITS, NO SALVAGE	EACH	3				3			
*	X8410141	REMOVAL OF TEMPORARY LUMINAIRE	EACH	8				8			
*	X8570233	FULL-ACTUATED CONTROLLER AND TYPE SUPER P CABINET (SPECIAL)	EACH	1			1				
*	X8620200	UNINTERRUPTABLE POWER SUPPLY (SPECIAL)	EACH	1			1				
*	X8710024	FIBER OPTIC CABLE IN CONDUIT, NO. 62.5/125, MM12F SM24F	FOOT	653			653				
*	X8760200	ACCESSIBLE PEDESTRIAN SIGNALS	EACH	8			8				

* SPECIALITY ITEM

PLOT DRIVER = ctb STORM 5
PLOT TABLE = BRKBTBLL5
FILE NAME = pw:\\patrickengw.bentley.com:patrickce-pw-01\Documents\Drland Pro\X2277.005\12_Design\12-3_CAD\SHEETS\1433rdb-tnt-SQD.dgn

PATRICK ENGINEERING

USER NAME = DT004	DESIGNED -	REVISED -	
	DRAWN -	REVISED -	
PLOT SCALE = 20.0000 ' / in.	CHECKED -	REVISED -	
PLOT DATE = 1/27/2025	DATE -	REVISED -	

STATE OF ILLINOIS
DEPARTMENT OF TRANSPORTATION

JOHN HUMPHREY DRIVE AT 143RD STREET
SUMMARY OF QUANTITIES

SCALE: | SHEET 17 OF 18 SHEETS | STA. TO STA.

F.A.U. RTE.	SECTION	COUNTY	TOTAL SHEETS	SHEET NO.
2520	16-00078-00-CH	COOK	228	21
		CONTRACT NO. 61K89		
		ILLINOIS FED. AID PROJECT		

	CODE NO.	ITEM	UNIT	TOTAL QUANTITY	80% FED / 20% LOCAL ROADWAY 0004 URBAN	80% FED / 20% LOCAL EX. DRYLAND BRIDGE 0013 URBAN	80% FED / 20% LOCAL TRAFFIC SIGNALS 0021 URBAN	100% LOCAL LIGHTING 0021 URBAN	100% LOCAL EVP 0021 URBAN	80% FED / 20% LOCAL TRAINEES 0042 URBAN	100% LOCAL UTILITY 0043 URBAN
*	X8780012	CONCRETE FOUNDATION, TYPE A 12-INCH DIAMETER	FOOT	4			4				
*	X8860107	PREFORMED DETECTOR LOOP	FOOT	333			333				
	Z0004556	HOT-MIX ASPHALT SURFACE REMOVAL (DECK)	SQ YD	554		554					
	Z0013797	STABILIZED CONSTRUCTION ENTRANCE	SQ YD	573	573						
	Z0013798	CONSTRUCTION LAYOUT	L SUM	1	1						
	Z0016200	DECK SLAB REPAIR (PARTIAL)	SQ YD	8		8					
	Z0033046	RE-OPTIMIZE TRAFFIC SIGNAL SYSTEM LEVEL 2	EACH	1			1				
	Z0056648	STORM SEWERS, TYPE 1, WATER MAIN QUALITY PIPE, 12"	FOOT	10	10						
	Z0056650	STORM SEWERS, TYPE 1, WATER MAIN QUALITY PIPE, 15"	FOOT	151	151						
	Z0056654	STORM SEWERS, TYPE 1, WATER MAIN QUALITY PIPE, 24"	FOOT	14	14						
	Z0056668	STORM SEWERS, TYPE 2, WATER MAIN QUALITY PIPE, 12"	FOOT	158	158						
	Z0056669	STORM SEWERS, TYPE 2, WATER MAIN QUALITY PIPE, 15"	FOOT	37	37						
	Z0056672	STORM SEWERS, TYPE 2, WATER MAIN QUALITY PIPE, 24"	FOOT	124	124						
	Z0062456	TEMPORARY PAVEMENT	SQ YD	209	209						
*	Z0073510	TEMPORARY TRAFFIC SIGNAL TIMING	EACH	2			2				
	Z0076600	TRAINEES	HOUR	500						500	
	Z0076604	TRAINEES TRAINING PROGRAM GRADUATE	EACH	500						500	

* SPECIALITY ITEM

PLOT ORDER = $FLTORDER
PEN TABLE = $PENTABLE
FILE NAME = pw:\\pwincksc\ne-pw.bentley.com:ustrfl.kc-pw-01\Documents\Other\Urban Park\72277.005\12_Design\12-1_Cad\DisSheet\S143HD-sht-SQD.dgn

PATRICK ENGINEERING	USER NAME = DT004	DESIGNED -	REVISED -
		DRAWN -	REVISED -
	PLOT SCALE = 20.0000 ' / in.	CHECKED -	REVISED -
	PLOT DATE = 1/27/2025	DATE -	REVISED -

STATE OF ILLINOIS
DEPARTMENT OF TRANSPORTATION

JOHN HUMPHREY DRIVE AT 143RD STREET
SUMMARY OF QUANTITIES

SHEET 18 OF 18 SHEETS STA. TO STA.

F.A.U. RTE.	SECTION	COUNTY	TOTAL SHEETS	SHEET NO.
2520	16-00078-00-CH	COOK	228	22

CONTRACT NO. 61K89

ILLINOIS FED. AID PROJECT

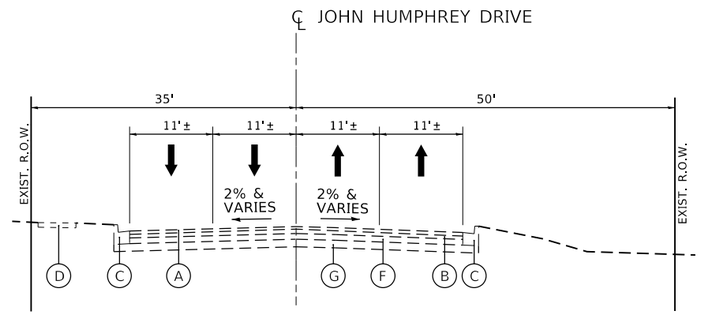

EXISTING TYPICAL SECTION
JOHN HUMPHREY DRIVE
(SOUTH OF 143RD)
STA. 492+54.70 TO STA. 496+37.00

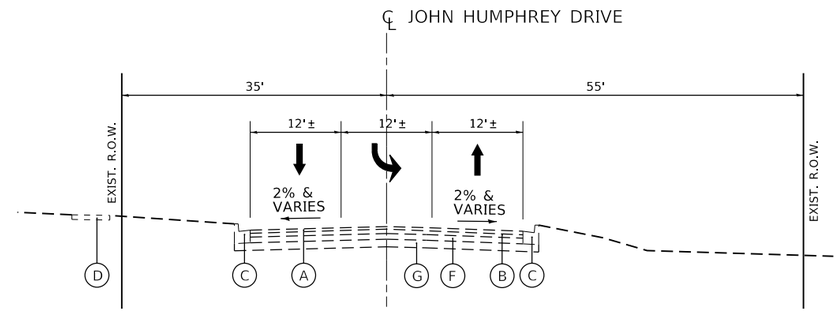

EXISTING TYPICAL SECTION
JOHN HUMPHREY DRIVE
(NORTH OF 143RD)
STA. 500+00.00 TO STA. 501+85.00

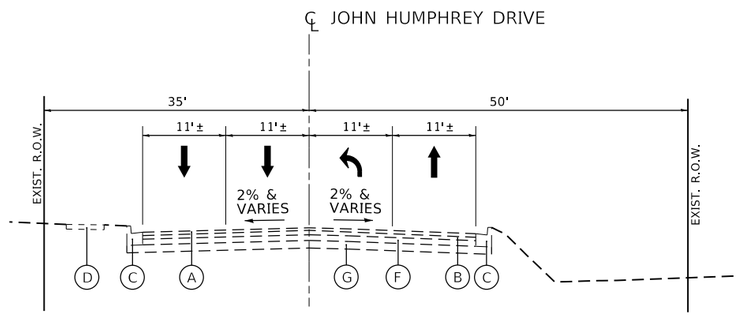

EXISTING TYPICAL SECTION
JOHN HUMPHREY DRIVE
(SOUTH OF 143RD)
STA. 496+37.00 TO STA. 500+00.00

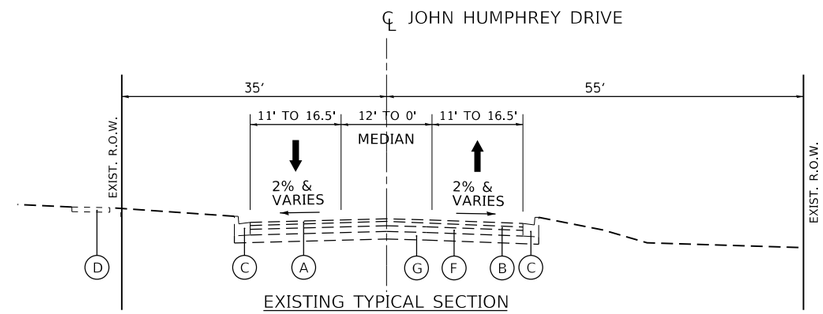

EXISTING TYPICAL SECTION
JOHN HUMPHREY DRIVE
(NORTH OF 143RD)
STA. 501+85.00 TO STA. 505+04.00

EXISTING LEGEND

- (A) HMA SURFACE COURSE, 1.5"
- (B) HMA BINDER COURSE, 1.5"
- (C) CONCRETE CURB & GUTTER
- (D) PCC SIDEWALK
- (E) PCC MEDIAN
- (F) PCC BASE, 9.0"
- (G) SUBBASE/SUBGRADE, 12.0"

PLOT DRIVER = $PLTDRV1$
PEN TABLE = $PENTBL1$
FILE NAME = pw:\\patrickco-pw.bentley.com:patrickco-pw-07\Documents\Orland Park\22277.005\12_Design\12-3_CADD\SHEETS\143HD-sht-Typical.dgn

PATRICK ENGINEERING

USER NAME = dtroyer	DESIGNED -	REVISED -	
	DRAWN -	REVISED -	
PLOT SCALE = 20.0000 ' / in.	CHECKED -	REVISED -	
PLOT DATE = 12/3/2024	DATE -	REVISED -	

STATE OF ILLINOIS
DEPARTMENT OF TRANSPORTATION

JOHN HUMPHREY DRIVE AT 143RD STREET
EXISTING TYPICAL SECTIONS

SCALE: NTS | SHEET 1 OF 4 SHEETS

F.A.U. RTE.	SECTION	COUNTY	TOTAL SHEETS	SHEET NO.
2520	16-00078-00-CH	COOK	228	23
		CONTRACT NO. 61K89		
		ILLINOIS	FED. AID PROJECT	

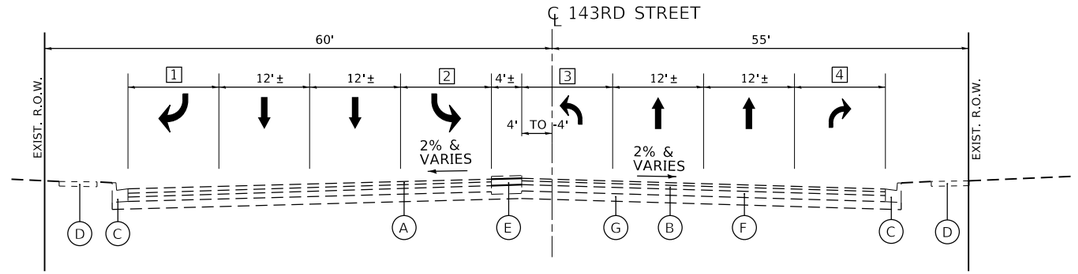

EXISTING TYPICAL SECTION
143RD STREET
(WEST OF JOHN HUMPHREY DRIVE)
STA. 58+37.55 TO STA. 63+50.00

EXISTING LEGEND

- (A) HMA SURFACE COURSE, 1.5"
- (B) HMA BINDER COURSE, 1.5"
- (C) CONCRETE CURB & GUTTER
- (D) PCC SIDEWALK
- (E) PCC MEDIAN TO BE REMOVED AND REPLACED WITH TEMP PAVEMENT
- (F) PCC BASE, 9.0"
- (G) SUBBASE/SUBGRADE, 12.0"
- (H) 48" EXPANDED POLYSTYRENE FOAM
- (I) 36" EXPANDED POLYSTYRENE FOAM
- (J) DRILLED SHAFTS

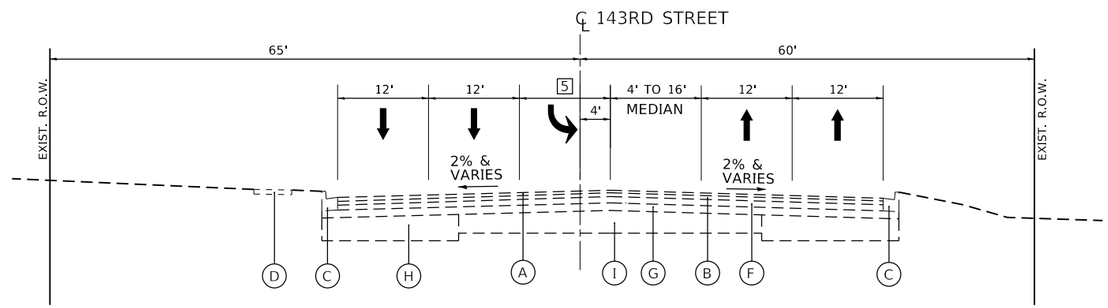

EXISTING TYPICAL SECTION
143RD STREET
(EAST OF JOHN HUMPHREY DRIVE)
STA. 63+50.00 TO STA. 65+05.50
STA. 67+16.50 TO STA. 76+58.69

#	BEGIN STATION	END STATION	BEGIN WIDTH	END WIDTH
1	58+37.55	61+85.00	12	0'
2	58+37.55	61+32.65	12'	0'
3	60+05.80	62+97.50	0'	12'
4	58+37.55	62+97.50	5.2'	12'
5	64+06.45	69+60.00	12'	0'

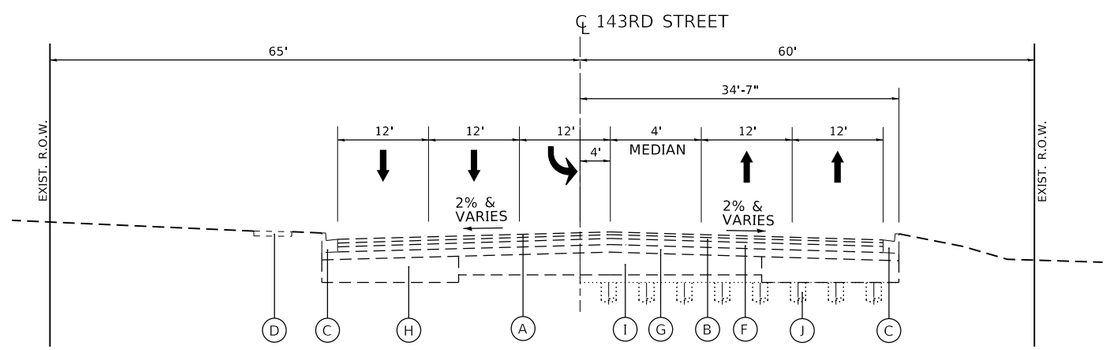

EXISTING TYPICAL SECTION
143RD STREET (SOUTH SIDE)
(EAST OF JOHN HUMPHREY DRIVE)
EX. DRY LAND BRIDGE STA. 65+05.50 TO STA. 67+16.50

PLOT DRIVER = $PLTDRV$LS
PEN TABLE = $PENTBL$LS
FILE NAME = pw:\\patrickco-pw.bentley.com:patrickco-pw-07\Documents\Orland Park\22277.005\12_Design\12-3_CADD\SHEETS\143rdDs-int-Typical.dgn

PATRICK ENGINEERING

USER NAME = dtroyer	DESIGNED -	REVISED -	
	DRAWN -	REVISED -	
PLOT SCALE = 20.0000 ' / in.	CHECKED -	REVISED -	
PLOT DATE = 12/3/2024	DATE - 12/03/24	REVISED -	

STATE OF ILLINOIS
DEPARTMENT OF TRANSPORTATION

JOHN HUMPHREY DRIVE AT 143RD STREET
EXISTING TYPICAL SECTIONS

SCALE: NTS | SHEET 2 OF 4 SHEETS

F.A.U. RTE.	SECTION	COUNTY	TOTAL SHEETS	SHEET NO.
2520	16-00078-00-CH	COOK	228	24
		CONTRACT NO. 61K89		
		ILLINOIS	FED. AID PROJECT	

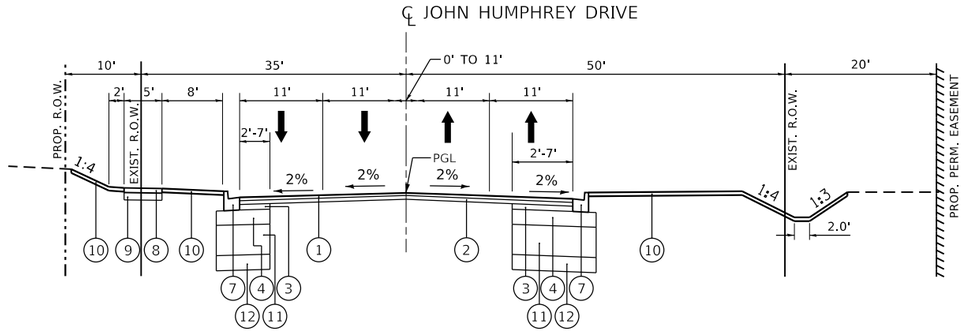

PROPOSED TYPICAL SECTION
JOHN HUMPHREY DRIVE
STA. 492+54.70 TO STA. 494+96.70

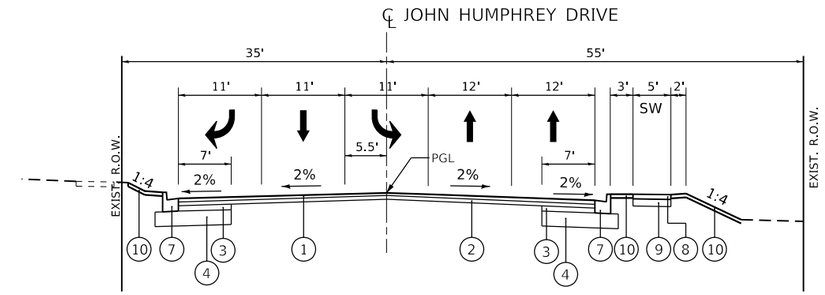

PROPOSED TYPICAL SECTION
JOHN HUMPHREY DRIVE
STA. 500+00.00 TO STA. 502+71.00

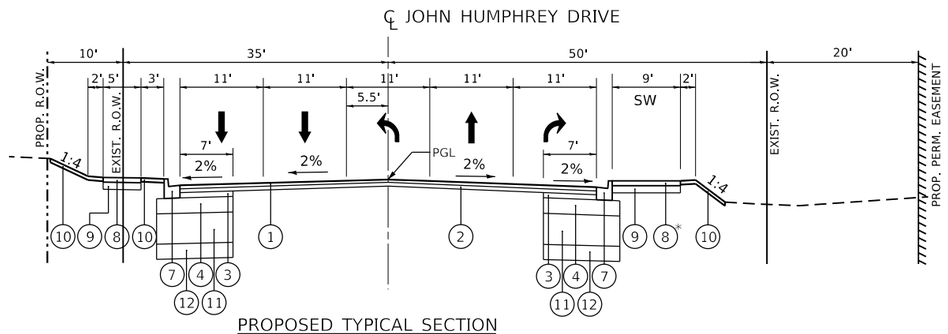

PROPOSED TYPICAL SECTION
JOHN HUMPHREY DRIVE
STA. 494+96.70 TO STA. 500+00.00

* BEGIN AT STA. 499+18

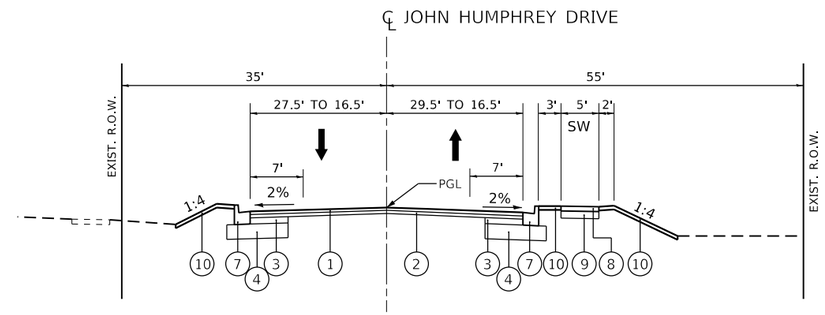

PROPOSED TYPICAL SECTION
JOHN HUMPHREY DRIVE
STA. 502+71.00 TO STA. 505+45.00

NOTES:

1. FOR HMA PAVT (FD), LONGITUDINAL JOINT SEALANT SHALL BE PLACED BEFORE AND AFTER THE POLYMERIZED HMA BC IL-19.0 N90 LIFT.

2. FOR RESURFACING, LONGITUDINAL JOINT SEALANT SHALL BE PLACED ON THE HMA BC IL-19.0 N70.

HOT-MIX ASPHALT MIXTURE REQUIREMENTS		QMP
MIXTURE TYPE	AIR VOIDS @ Ndes	
HMA PAVEMENT (FULL DEPTH) 10"		
POLYMERIZED HMA SURFACE COURSE IL-9.5, MIX "E", N70, 2"	4% @ 70 GYR.	LR 1030-2
POLYMERIZED HMA BINDER COURSE IL-19.0, N90, 2.25"	4% @ 90 GYR.	LR 1030-2
HMA BINDER COURSE IL-19.0, N90, 5.75"	4% @ 90 GYR.	LR 1030-2
HMA PAVEMENT FOR WIDENING (JOHN HUMPHREY DRIVE)		
HMA SURFACE COURSE IL-9.5, MIX "D", N70, 1.5"	4% @ 70 GYR.	LR 1030-2
HMA BINDER COURSE IL-19.0, N70, 2.25"	4% @ 70 GYR.	LR 1030-2
PAVEMENT RESURFACING (JOHN HUMPHREY DRIVE)		
HMA SURFACE COURSE IL-9.5, MIX "D", N70, 1.5"	4% @ 70 GYR.	LR 1030-2
HMA BINDER COURSE IL-19.0, N70, 2.25"	4% @ 70 GYR.	LR 1030-2
HMA DRIVEWAY PAVEMENT		
HMA SURFACE COURSE IL-9.5, MIX "D", N50, 2"	4% @ 50 GYR.	LR 1030-2
HMA BASE COURSE (HMA BINDER IL-19.0 mm), PE-6"	4% @ 50 GYR.	LR 1030-2
HMA TEMPORARY PAVEMENT		
HMA SURFACE COURSE IL-9.5, MIX "D", N70, 2"	4% @ 70 GYR.	LR 1030-2
HMA BINDER COURSE IL-19.0, N70, 8"	4% @ 70 GYR.	LR 1030-2
FULL LANE SEALANT WATERPROOFING SYSTEM		
POLYMERIZED HMA SURFACE COURSE, SMA, 9.5, MIX "F", N80, 2"	3.5% @ 80 GYR.	LR 1030-2
POLYMERIZED HMA BINDER COURSE, IL-4.75, N50, 1-1/4"	3.5% @ 50 GYR.	LR 1030-2
PAVEMENT CONNECTOR(HMA) FOR BRIDGE APPROACH SLAB		
POLYMERIZED HMA SURFACE COURSE IL-9.5 MIX "E" N70, 2"	4% @ 70 GYR.	LR 1030-2
POLYMERIZED HMA BINDER COURSE IL-19.0 N90, 2.25"	4% @ 90 GYR.	LR 1030-2
HMA BINDER COURSE IL 19.0 N90 VARIES 5.75' TO 10.75"	4% @ 90 GYR.	LR 1030-2
QMP DESIGNATION: QUALITY CONTROL/QUALITY ASSURANCE (QC/QA) PER LR 1030-2		

NOTES:

1. THE UNIT WEIGHT USED TO CALCULATE ALL HOT-MIX ASPHALT SURFACE MIXTURE QUANTITIES IS 112 LB/SQ YD/IN

2. THE "AC TYPE" FOR POLYMERIZED MIXTURES SHALL BE "SBS/SBR PG 76-22"; AND FOR NON-POLYMERIZED HMA THE "AC TYPE" SHALL BE "PG 64-22" UNLESS MODIFIED BY RECLAIMED MATERIALS SPECIFICATIONS.

3. PCC TEMPORARY PAVEMENT SHALL CONSIST OF CLASS PV CONCRETE MEETING THE REQUIREMENTS OF ART. 1020 OF THE STANDARD SPECIFICATIONS, PCC PAVEMENT 10" THICK.. TEMPORARY PCC PAVEMENTS DOES NOT REQUIRE DOWEL BARS

PROPOSED LEGEND (JOHN HUMPHREY DRIVE)

1. HMA SURFACE COURSE, IL-9.5, MIX "D", N70, 1.5"
2. HMA BINDER COURSE, IL-19.0, N70, 2.25"
3. PCC BASE COURSE WIDENING, 9"
4. AGGREGATE SUBGRADE IMPROVEMENT, 12"
5. CONCRETE MEDIAN, TYPE SB-6.12
6. COMBINATION CONCRETE CURB & GUTTER, TYPE B-6.24
7. COMBINATION CONCRETE CURB & GUTTER, TYPE B-6.12
8. PORTLAND CEMENT CONCRETE SIDEWALK, 5 INCH
9. SUBBASE GRANULAR MATERIAL, TYPE B, 6"
10. TOPSOIL FURNISH AND PLACE, 4", SEEDING CLASS 2A
11. SUBBASE GRANULAR MATERIAL, TYPE B, 24"
12. EXPANDED POLYSTYRENE FILL, 12"

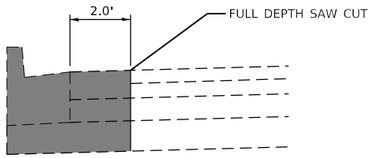

SAW CUT LOCATION ALONG INTERSECTION RADII
(ALL QUADRANTS)

PLOT DRIVER = SPLTDRVL5
PEN TABLE = SPENTBLL5
FILE NAME = pw:\\patrickcco-pw.bentley.com:patrickcco-pw-07\Documents\Orland Park\22277.005\12_Design\12-3_CADD\SHEETS\1433HD-sht-Typical.dgn

PATRICK ENGINEERING

USER NAME = DT004	DESIGNED -	REVISED -	
	DRAWN -	REVISED -	
PLOT SCALE = 20.0000 ' / in.	CHECKED -	REVISED -	
PLOT DATE = 12/19/2024	DATE - 12/03/24	REVISED -	

STATE OF ILLINOIS
DEPARTMENT OF TRANSPORTATION

JOHN HUMPHREY DRIVE AT 143RD STREET
PROPOSED TYPICAL SECTIONS

SCALE: NTS | SHEET 3 OF 4 SHEETS

F.A.U. RTE.	SECTION	COUNTY	TOTAL SHEETS	SHEET NO.
2520	16-00078-00-CH	COOK	228	25
		CONTRACT NO. 61K89		
		ILLINOIS	FED. AID PROJECT	

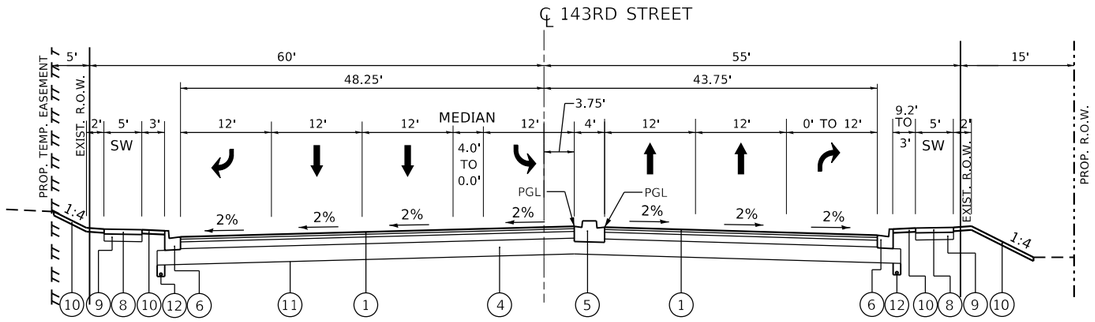

PROPOSED TYPICAL SECTION
143RD STREET
STA. 58+37.55 TO STA. 59+57.42

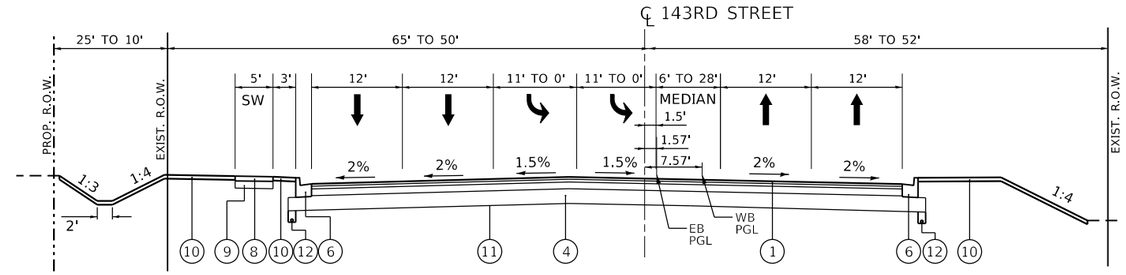

PROPOSED TYPICAL SECTION
143RD STREET
STA. 67+78.10 TO STA. 70+78.50

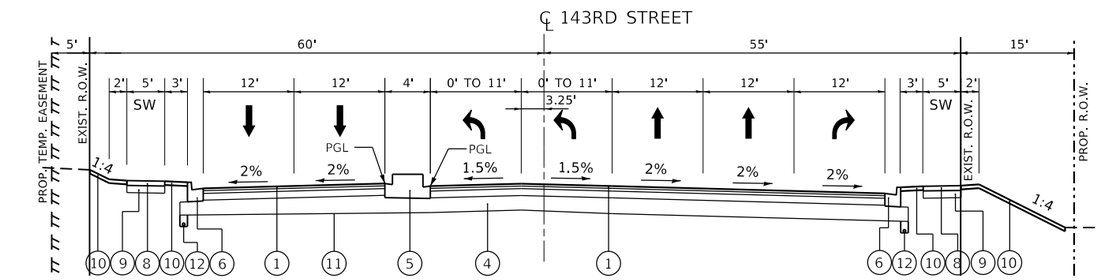

PROPOSED TYPICAL SECTION
143RD STREET
STA. 59+57.42 TO STA. 61+32.75

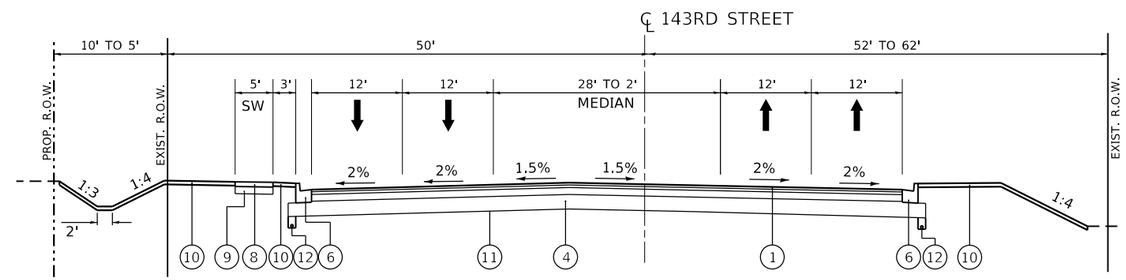

PROPOSED TYPICAL SECTION
143RD STREET
STA. 70+78.50 TO STA. 74+03.63

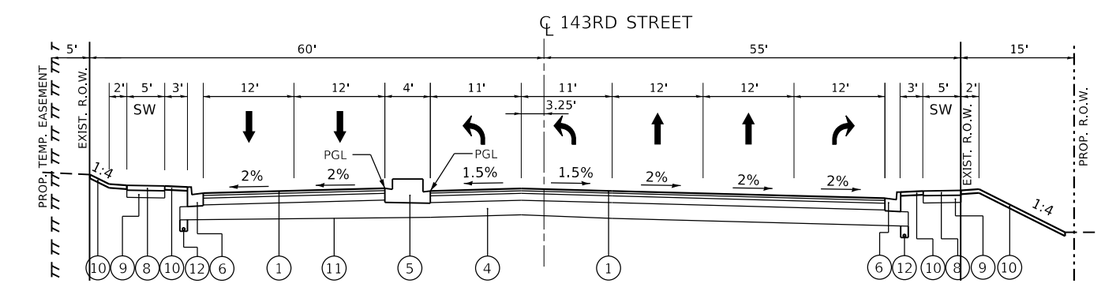

PROPOSED TYPICAL SECTION
143RD STREET
STA. 61+32.75 TO STA. 62+80.00

PROPOSED TYPICAL SECTION
143RD STREET
STA. 70+78.50 TO STA. 74+03.63

NOTES:

1. FOR HMA PAVT (FD), LONGITUDINAL JOINT SEALANT SHALL BE PLACED BEFORE AND AFTER THE POLYMERIZED HMA BC IL-19.0 N90 LIFT.
2. FOR RESURFACING, LONGITUDINAL JOINT SEALANT SHALL BE PLACED ON THE HMA BC IL-19.0 N70.
3. FOR THE PGL LOCATION TRANSITIONS PAST STA. 64+00, SEE SHEET 35
4. PIPE UNDERDRAINS SHALL BE INSTALLED ACCORDING TO SECTION 601 OF THE STANDARD SPECIFICATIONS AND STANDARD 606001-05. TOP OF PIPE UNDERDRAINS SHALL BE MINIMUM OF 6" BELOW THE AGGREGADE SUBGRADE LAYER. THE COST OF MAKING UNDERDRAINS CONNECTIONS TO DRAINAGE STRUCTURES SHALL BE INCLUDED IN THE COSTS OF THE PIPE UNDERDRAINS.
5. FOR TYPICALS SECTIONS FROM STA. 62+80.00 TO STA. 67+78.10 SEE SHEET139

PROPOSED LEGEND (143RD STREET)

1. HOT-MIX ASPHALT (FULL-DEPTH) 10"
2. NOT USED
3. NOT USED
4. AGGREGATE SUBGRADE IMPROVEMENT 12"
5. CONCRETE MEDIAN, TYPE SB-6.12
6. COMBINATION CONCRETE CURB & GUTTER, TYPE B-6.24
7. COMBINATION CONCRETE CURB & GUTTER, TYPE B-6.12
8. PORTLAND CEMENT CONCRETE SIDEWALK, 5 INCH
9. SUBBASE GRANULAR MATERIAL, TYPE B, 6.0"
10. TOPSOIL FURNISH AND PLACE, 4", SEEDING CLASS 2A
11. GEOTECHNICAL FABRIC FOR GROUND STABILIZATION
12. PIPE UNDERDRAIN TYPE 2, 4"

PLOT DRIVER = $PLTDRVLS
PEN TABLE = $PENTBLLS
FILE NAME = pw:\\patrickco-pw.bentley.com:patrickco-pw-07\Documents\Orland Park\22277.005\12_Design\12.3_CADD\SHEETS\143HD-sht-Typical.dgn

PATRICK ENGINEERING

USER NAME = dtroyer	DESIGNED -	REVISED -	
	DRAWN -	REVISED -	
PLOT SCALE = 20.0000 ' / in.	CHECKED -	REVISED -	
PLOT DATE = 12/3/2024	DATE - 12/03/24	REVISED -	

STATE OF ILLINOIS
DEPARTMENT OF TRANSPORTATION

JOHN HUMPHREY DRIVE AT 143RD STREET
PROPOSED TYPICAL SECTIONS

SCALE: NTS | SHEET 4 OF 4 SHEETS

F.A.U. RTE.	SECTION	COUNTY	TOTAL SHEETS	SHEET NO.
2520	16-00078-00-CH	COOK	228	26
		CONTRACT NO. 61K89		
		ILLINOIS	FED. AID PROJECT	

EARTHWORK VOLUME (CU YD)						
STATION TO STATION	EARTH EXCAVATION (SUITABLE CUT)	EARTH EXCAVATION (15% S.F.) USED FOR EMBANKMENT	EMBANKMENT (SUITABLE FILL)	EARTHWORK BALANCE WASTE (+) OR SHORTAGE (-)	TOPSOIL EXCAVATION AND PLACEMENT	REMOVAL AND DISPOSAL OF UNSUITABLE MATERIAL*
143rd STREET	1183.2	1005.72	3295.6	-2289.88	307	0
JOHN HUMPHREY DRIVE	985.5	837.675	1192.8	-355.125	296.5	1020
TOTAL	**2168.7**	**1843.395**	**4488.4**	**-2645.01**	**603.5**	**1020**

PAY ITEM NO.	DESIGNATION	TOTAL
20200100	EARTH EXCAVATION	2170
20201200	REMOVAL AND DISPOSAL OF UNSUITABLE MATERIAL	1020
20400800	FURNISHED EXCAVATION	2645
21101505	TOPSOIL EXCAVATION AND PLACEMENT	605

REMOVALS									
STATION	STATION	CURB AND GUTTER REMOVAL (FOOT)	SIDEWALK REMOVAL (SQ FT)	MEDIAN REMOVAL (SQ FT)	CURB REMOVAL (FOOT)	DRIVEWAY REMOVAL (SQ YD)	HMA SURFACE REMOVAL (SQ YD)	PAVEMENT REMOVAL (SQ YD)	HMA BUTT JOINT REMOVAL (SQ YD)
58 + 37.55	74 + 03.63	4745	8910	1888	123	357	819	12205	0
492 + 54.70	505 + 45.00	280	762	0	0	126	4704	357	129
TOTAL		5025	9672	1888	123	483	5523	12562	129

PAVING						
STATION	STATION	HMA PAVEMENT FULL DEPTH, 10" (SQ YD)	AGGREGATE SUBGRADE IMPROVEMENT, 12" (SQ YD)	COMBINATION CONCRETE CURB AND GUTTER TYPE B-6.12 (FOOT)	COMBINATION CONCRETE CURB AND GUTTER TYPE B-6.24 (FOOT)	PCC BASE COURSE WIDENING (SQ YD)
58 + 37.55	74 + 03.63	13830	12356	0	2665	0
492 + 54.70	505 + 45.00	0	1882	2118	0	688
TOTAL		13830	14238	2118	2665	688

PIPE UNDERDRAINS, TYPE 2, 4"			
STATION	STATION	LT/RT	LENGTH (FT)
58+38	60+01	RT	164
60+01	61+50	RT	149
61+50	62+52	RT	102
62+52	62+70	RT	18
58+38	60+01	LT	164
60+01	61+50	LT	149
61+50	62+70	LT	120
68+00	69+00	RT	100
64+51	65+82	LT	131
74+04	71+00	RT	304
71+00	69+00	RT	200
74+04	71+00	LT	304
71+00	68+97	LT	203
68+97	67+00	LT	197
67+00	65+82	LT	118
65+06	64+30	RT	77
64+30	64+08	RT	22
64+08	63+94	RT	17
63+94	63+79	RT	23
63+79	63+77	RT	14
60+01	60+01	-	91
62+70	62+70	-	94
65+82	65+82	-	47
69+00	69+00	-	74
71+00	71+00	-	76
TOTAL			2,955

THERMOPLASTIC PAVEMENT MARKINGS - LINE 4"			
STATION	STATION	TYPE	LENGTH (FOOT)
58 + 37.55	63 + 18.84	WHITE EDGE LINE	444.95
58 + 37.55	63 + 18.84	WHITE EDGE LINE	447.18
58 + 37.55	62 + 79.62	YELLOW EDGE LINE	896.22
58 + 37.55	62 + 46.65	SKIP DASH LINE	110.00
58 + 37.55	62 + 49.24	SKIP DASH LINE	110.00
64 + 25.00	74 + 03.63	WHITE EDGE LINE	980.37
64 + 25.00	74 + 03.63	WHITE EDGE LINE	977.19
64 + 37.00	76 + 49.39	WHITE SKIP DASH LANE LINE	306.00
64 +32.34	74 + 3.63	WHITE SKIP DASH LANE LINE	250.00
64 + 37.00	67 + 78.10	YELLOW EDGE LINE	696.57
67 + 78.10	72 + 18.36	YELLOW DOUBLE LINE	1,771.37
72 + 89.04	76 + 58.69	YELLOW DOUBLE LINE	741.28
492 + 54.70	498 + 55.94	WHITE EDGE LINE	591.83
492 + 54.70	499 + 65.65	WHITE EDGE LINE	747.31
492 + 54.70	499 + 18.01	YELLOW DOUBLE LINE	1,325.53
492 + 54.70	499 + 9.69	SKIP DASH LINE	170.00
501 + 01.89	505 + 45.00	WHITE EDGE LINE	444.09
500 + 56.60	505 + 45.00	WHITE EDGE LINE	500.38
500 + 86.07	505 + 45.00	YELLOW DOUBLE LINE	1,434.16
500 + 85.47	502 + 55.13	SKIP DASH LINE	50.00
TOTAL			12995

THERMOPLASTIC PAVEMENT MARKINGS - LINE 6"			
STATION	STATION	TYPE	LENGTH (FOOT)
58 + 37.55	59 + 56.62	WHITE LANE LINE	119.47
58 + 37.55	59 + 56.62	WHITE LANE LINE	119.47
58 + 37.55	59 + 56.62	WHITE LANE LINE	119.54
58 + 37.55	59 + 36.01	WHITE DOTTED LINE	26.00
59 + 38.00	62 + 76.45	WHITE LANE LINE	337.99
59 + 56.62	61 + 26.45	WHITE DOTTED LINE	44.00
59 + 56.62	61 + 26.45	WHITE DOTTED LINE	44.00
59 + 56.62	61 + 26.45	WHITE DOTTED LINE	42.00
61 + 33.00	62 + 76.45	WHITE LANE LINE	142.95
61 + 33.00	62 + 76.45	WHITE LANE LINE	142.95
62 + 81.47	62 + 81.47	WHITE CROSSWALK LINE	103.22
62 + 88.84	62 + 88.84	WHITE CROSSWALK LINE	109.84
64 + 26.53	64 + 26.53	WHITE CROSSWALK LINE	90.59
64 + 32.54	64 + 32.54	WHITE CROSSWALK LINE	85.95
64 + 37.00	67 + 78.10	WHITE LANE LINE	340.00
64 + 37.00	67 + 78.10	WHITE LANE LINE	340.00
67 + 78.00	70 + 79.00	WHITE DOTTED LINE	76.00
67 + 78.00	70 + 34.72	WHITE DOTTED LINE	66.00
72 + 84.36	74 + 59.00	WHITE LANE LINE	353.54
74 + 59.00	76 + 58.69	WHITE DOTTED LINE	50.00
493 + 26.54	495 + 3.11	WHITE DOTTED LINE	46.00
493 + 58.53	495 + 18.03	WHITE DOTTED LINE	42.00
495 + 3.11	499 + 16.10	WHITE LANE LINE	413.03
495 + 18.03	499 + 16.10	WHITE LANE LINE	397.98
499 + 21.54	499 + 21.54	WHITE CROSSWALK LINE	73.83
499 + 27.49	499 + 27.49	WHITE CROSSWALK LINE	80.34
500 + 76.13	500 + 76.13	WHITE CROSSWALK LINE	93.38
500 + 82.14	500 + 82.14	WHITE CROSSWALK LINE	86.62
500 + 88.22	502 + 46.00	WHITE LANE LINE	158.01
500 + 88.22	502 + 70.96	WHITE LANE LINE	183.04
502 + 46.00	503 + 77.5	WHITE DOTTED LINE	32.00
502 + 70.96	504 + 36.00	WHITE DOTTED LINE	42.00
TOTAL			4402

THERMOPLASTIC PAVEMENT MARKINGS - LINE 24"			
STATION	STATION	TYPE	LENGTH (FOOT)
62 + 75.94	62 + 75.94	WHITE STOP BAR LINE	67.98
64 + 37.00	64 + 37.00	WHITE STOP BAR LINE	52.82
499 + 17.00	499 + 17.00	WHITE STOP BAR LINE	32.91
500 + 87.17	500 + 87.17	WHITE STOP BAR LINE	33.77
TOTAL			188

TREE REMOVAL (OVER 15 UNITS DIAMETER)					
ALIGNMENT	SHEET NO.	STA. FROM	OFFSET	LT/RT	UNIT
143RD ST	27	495+54	29'	LT	16
143RD ST	27	496+19	29'	LT	16
				TOTAL	32

THERMOPLASTIC PAVEMENT MARKINGS - LETTERS AND SYMBOLS			
STATION	STATION	TYPE	AREA (SQ FT)
58 + 42.88	58 + 50.98	RIGHT TURN ARROW	15.60
58 + 45.37	58 + 53.29	LEFT TURN ARROW	15.60
59 + 0.82	59 + 8.86	ONLY	20.80
59 + 3.28	59 + 11.30	ONLY	20.80
59 + 39.40	59 + 47.42	ONLY	20.80
59 + 97.21	60 + 5.35	RIGHT TURN ARROW	15.60
61 + 81.98	61 + 90.00	ONLY	20.80
61 + 82.33	61 + 90.34	ONLY	20.80
61 + 83.46	61 + 91.48	ONLY	20.80
62 + 40.02	62 + 47.92	LEFT TURN ARROW	15.60
62 + 40.37	62 + 48.26	LEFT TURN ARROW	15.60
62 + 41.31	62 + 49.41	RIGHT TURN ARROW	15.60
64 + 46.06	64 + 54.08	LEFT TURN ARROW	15.60
64 + 46.13	64 + 54.15	LEFT TURN ARROW	15.60
65 + 4.05	64 + 12.07	ONLY	20.80
65 + 4.12	64 + 12.15	ONLY	20.80
67 + 13.30	67 + 21.31	LEFT TURN ARROW	15.60
67 + 13.37	67 + 21.39	LEFT TURN ARROW	15.60
67 + 71.29	67 + 79.30	ONLY	20.80
67 + 71.38	67 + 79.37	ONLY	20.80
71 + 48.71	71 + 56.72	ONLY	20.80
72 + 6.72	72 + 14.64	LEFT TURN ARROW	15.60
72 + 90.21	72 + 98.11	LEFT TURN ARROW	15.60
73 + 48.13	72 + 56.14	ONLY	20.80
495 + 17.10	495 + 25.11	ONLY	20.80
495 + 17.77	495 + 25.77	ONLY	20.80
495 + 75.21	495 + 83.14	LEFT TURN ARROW	15.60
495 + 75.73	495 + 83.83	RIGHT TURN ARROW	15.60
498 + 43.10	498 + 51.14	ONLY	20.80
498 + 43.83	498 + 51.83	ONLY	20.80
499 + 1.23	499 + 9.16	LEFT TURN ARROW	15.60
499 + 1.79	499 + 9.89	RIGHT TURN ARROW	15.60
500 + 92.61	501 + 0.73	RIGHT TURN ARROW	15.60
500 + 92.78	501 + 0.73	LEFT TURN ARROW	15.60
501 + 50.61	501 + 58.62	ONLY	20.80
501 + 50.71	501 + 58.70	ONLY	20.80
TOTAL			656.00

PLOT DRIVER = $PLTDRV$
PEN TABLE = $PENTBL$
FILE NAME = pw:\\patrickco-pw.bentley.com:patrickco-pw07\Documents\Orland Park\22277.005\12_Design\12-3_CADD\SHEETS\143HD-STR-SCH.dgn

PATRICK ENGINEERING

USER NAME = DT004	DESIGNED -	REVISED -	
	DRAWN -	REVISED -	
PLOT SCALE = 20.0000 ' / in.	CHECKED -	REVISED -	
PLOT DATE = 1/16/2025	DATE -	REVISED -	

STATE OF ILLINOIS
DEPARTMENT OF TRANSPORTATION

JOHN HUMPHREY DRIVE AT 143RD STREET
SCHEDULE OF QUANTITIES

SCALE: 1" = 20' | SHEET OF SHEETS

F.A.U. RTE.	SECTION	COUNTY	TOTAL SHEETS	SHEET NO.
2520	16-00078-00-CH	COOK	228	27

CONTRACT NO. 61K89

ILLINOIS | FED. AID PROJECT

ALIGNMENT COORDINATES - 143RD STREET			
	STATION	N	E
POB	50+00.00	1808303.7511	1115327.7898
PI	63+48.51	1808345.6283	1116675.6523
PI	68+00.00	1808359.4649	1117126.9272
PI	72+00.00	1808372.3206	1117526.7209
POT	78+00.00	1808390.9532	1118126.4313

ALIGNMENT COORDINATES - JOHN HUMPHREY DRIVE			
	STATION	N	E
POT	487+83.28	1807227.4401	1116374.2083
PC	490+33.28	1807414.3546	1116540.2293
PC	492+83.28	1807607.9890	1116698.3618
PT	495+11.76	1807857.8709	1116690.6688
PI	499+99.75	1808345.6283	1116675.6523
POT	507+10.15	1809046.8527	1116659.6841

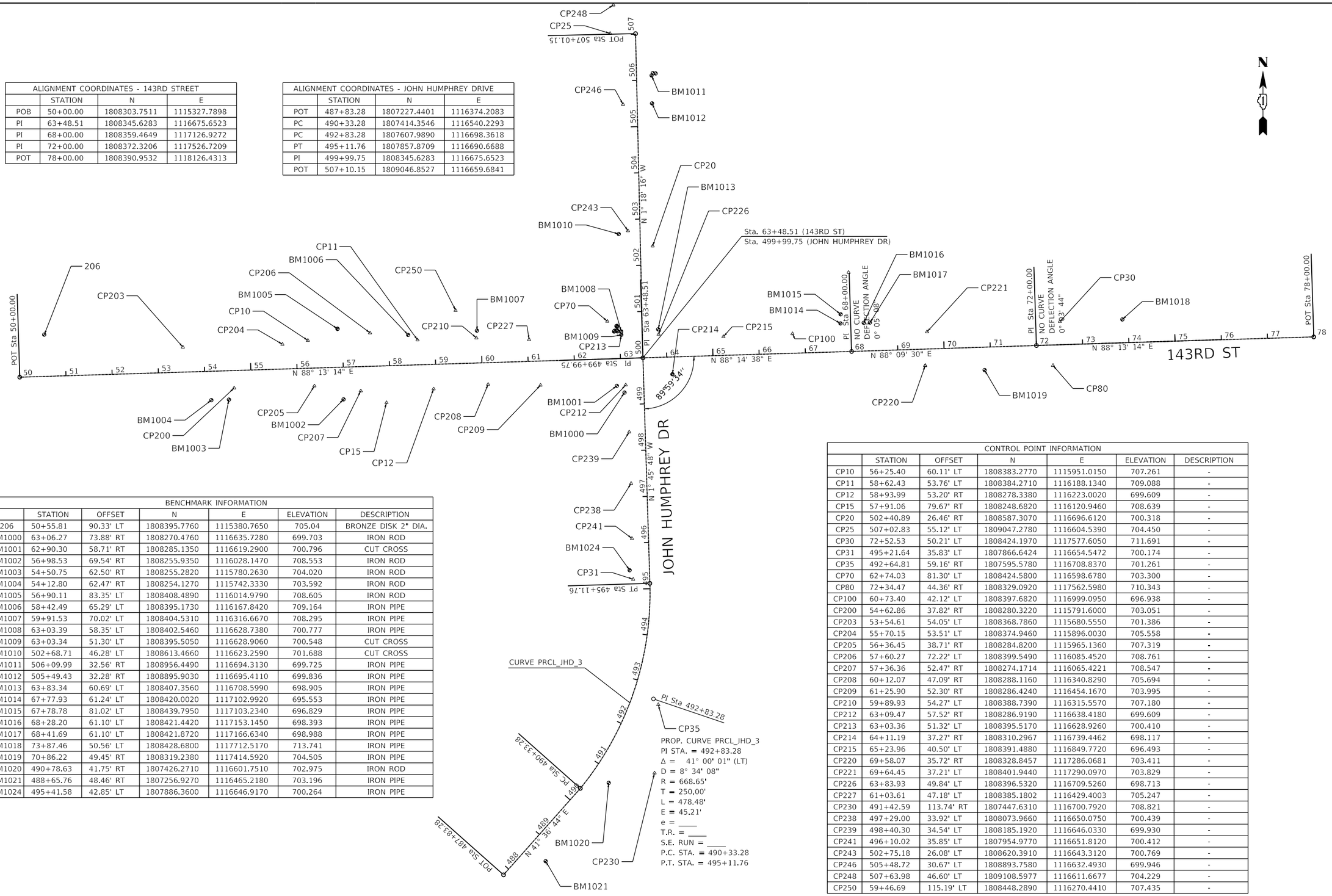

PROP. CURVE PRCL_JHD_3
PI STA. = 492+83.28
Δ = 41° 00' 01" (LT)
D = 8° 34' 08"
R = 668.65'
T = 250.00'
L = 478.48'
E = 45.21'
e = ____
T.R. = ____
S.E. RUN = ____
P.C. STA. = 490+33.28
P.T. STA. = 495+11.76

BENCHMARK INFORMATION						
	STATION	OFFSET	N	E	ELEVATION	DESCRIPTION
206	50+55.81	90.33' LT	1808395.7760	1115380.7650	705.04	BRONZE DISK 2" DIA.
BM1000	63+06.27	73.88' RT	1808270.4760	1116635.7280	699.703	IRON ROD
BM1001	62+90.30	58.71' RT	1808285.1350	1116619.2900	700.796	CUT CROSS
BM1002	56+98.53	69.54' RT	1808255.9350	1116028.1470	708.553	IRON ROD
BM1003	54+50.75	62.50' RT	1808255.2820	1115780.2630	704.020	IRON ROD
BM1004	54+12.80	62.47' RT	1808254.1270	1115742.3330	703.592	IRON ROD
BM1005	56+90.11	83.35' LT	1808408.4890	1116014.9790	708.605	IRON ROD
BM1006	58+42.49	65.29' LT	1808395.1730	1116167.8420	709.164	IRON PIPE
BM1007	59+91.53	70.02' LT	1808404.5310	1116316.6670	708.295	IRON PIPE
BM1008	63+03.39	58.35' LT	1808402.5460	1116628.7380	700.777	IRON PIPE
BM1009	63+03.34	51.30' LT	1808395.5050	1116628.9060	700.548	CUT CROSS
BM1010	502+68.71	46.28' LT	1808613.4660	1116623.2590	701.688	CUT CROSS
BM1011	506+09.99	32.56' RT	1808956.4490	1116694.3130	699.725	IRON PIPE
BM1012	505+49.43	32.28' RT	1808895.9030	1116695.4110	699.836	IRON PIPE
BM1013	63+83.34	60.69' LT	1808407.3560	1116708.5990	698.905	IRON PIPE
BM1014	67+77.93	61.24' LT	1808420.0020	1117102.9920	695.553	IRON PIPE
BM1015	67+78.78	81.02' LT	1808439.7950	1117103.2340	696.829	IRON PIPE
BM1016	68+28.20	61.10' LT	1808421.4420	1117153.1450	698.393	IRON PIPE
BM1017	68+41.69	61.10' LT	1808421.8720	1117166.6340	698.988	IRON PIPE
BM1018	73+87.46	50.56' LT	1808428.6800	1117712.5170	713.741	IRON PIPE
BM1019	70+86.22	49.45' RT	1808319.2380	1117414.5920	704.505	IRON PIPE
BM1020	490+78.63	41.75' RT	1807426.2710	1116601.7510	702.975	IRON ROD
BM1021	488+65.76	48.46' RT	1807256.9270	1116465.2180	703.196	IRON PIPE
BM1024	495+41.58	42.85' LT	1807886.3600	1116646.9170	700.264	IRON PIPE

CONTROL POINT INFORMATION						
	STATION	OFFSET	N	E	ELEVATION	DESCRIPTION
CP10	56+25.40	60.11' LT	1808383.2770	1115951.0150	707.261	-
CP11	58+62.43	53.76' LT	1808384.2710	1116188.1340	709.088	-
CP12	58+93.99	53.20' RT	1808278.3380	1116223.0020	699.609	-
CP15	57+91.06	79.67' RT	1808248.6820	1116120.9460	708.639	-
CP20	502+40.89	26.46' RT	1808587.3070	1116696.6120	700.318	-
CP25	507+02.83	55.12' LT	1809047.2780	1116604.5390	704.450	-
CP30	72+52.53	50.21' LT	1808424.1970	1117577.6050	711.691	-
CP31	495+21.64	35.83' LT	1807866.6424	1116654.5472	700.174	-
CP35	492+64.81	59.16' RT	1807595.5780	1116708.8370	701.261	-
CP70	62+74.03	81.30' LT	1808424.5800	1116598.6780	703.300	-
CP80	72+34.47	44.36' RT	1808329.0920	1117562.5980	710.343	-
CP100	60+73.40	42.12' LT	1808397.6820	1116999.0950	696.938	-
CP200	54+62.86	37.82' RT	1808280.3220	1115791.6000	703.051	-
CP203	53+54.61	54.05' LT	1808368.7860	1115680.5550	701.386	-
CP204	55+70.15	53.51' LT	1808374.9460	1115896.0030	705.558	-
CP205	56+36.45	38.71' RT	1808284.8200	1115965.1360	707.319	-
CP206	57+60.27	72.22' LT	1808399.5490	1116085.4520	708.761	-
CP207	57+36.36	52.47' RT	1808274.1714	1116065.4221	708.547	-
CP208	60+12.07	47.09' RT	1808288.1160	1116340.8290	705.694	-
CP209	61+25.90	52.30' RT	1808286.4240	1116454.1670	703.995	-
CP210	59+89.93	54.27' LT	1808388.7390	1116315.5570	707.180	-
CP212	63+09.47	57.52' RT	1808286.9190	1116638.4180	699.609	-
CP213	63+03.36	51.32' LT	1808395.5170	1116628.9260	700.410	-
CP214	64+11.19	37.27' RT	1808310.2967	1116739.4462	698.117	-
CP215	65+23.96	40.50' LT	1808391.4880	1116849.7720	696.493	-
CP220	69+58.07	35.72' RT	1808328.8457	1117286.0681	703.411	-
CP221	69+64.45	37.21' LT	1808401.9440	1117290.0970	703.829	-
CP226	63+83.93	49.84' LT	1808396.5320	1116709.5260	698.713	-
CP227	61+03.61	47.18' LT	1808385.1802	1116429.4003	705.247	-
CP230	491+42.59	113.74' RT	1807447.6310	1116700.7920	708.821	-
CP238	497+29.00	33.92' LT	1808073.9660	1116650.0750	700.439	-
CP239	498+40.30	34.54' LT	1808185.1920	1116646.0330	699.930	-
CP241	496+10.02	35.85' LT	1807954.9770	1116651.8120	700.412	-
CP243	502+75.18	26.08' LT	1808620.3910	1116643.3120	700.769	-
CP246	505+48.72	30.67' LT	1808893.7580	1116632.4930	699.946	-
CP248	507+63.98	46.60' LT	1809108.5977	1116611.6677	704.229	-
CP250	59+46.69	115.19' LT	1808448.2890	1116270.4410	707.435	-

PLOT DRIVER = $PLTDRVLS
PEN TABLE = $PENTBLLS
FILE NAME = pw:\\patrickco-pw.bentley.com:patrickco-pw-07\Documents\Orland Park\22277.00\12_Design\12.3_CADD\SHEETS\143JHD-sht-Alignment.dgn

PATRICK ENGINEERING

USER NAME = dtroyer	DESIGNED -	REVISED -	
	DRAWN -	REVISED -	
PLOT SCALE = 200.0000 ' / in.	CHECKED -	REVISED -	
PLOT DATE = 12/3/2024	DATE -	REVISED -	

STATE OF ILLINOIS
DEPARTMENT OF TRANSPORTATION

JOHN HUMPHREY DRIVE AT 143RD STREET
ALIGNMENT PLAN

SCALE: 1" = 100' | SHEET OF SHEETS

F.A.U. RTE.	SECTION	COUNTY	TOTAL SHEETS	SHEET NO.
2520	16-00078-00-CH	COOK	228	28
		CONTRACT NO. 61K89		
		ILLINOIS	FED. AID PROJECT	

PAVEMENT REMOVAL
HMA SURFACE REMOVAL, 3"
SAW CUT PAVEMENT & PAVEMENT REMOVAL
SIDEWALK REMOVAL
DRIVEWAY REMOVAL
COMB. CONC. CURB & GUTTER REMOVAL
TREE REMOVAL
TREE TRUNK PROTECTION
SIGN REMOVAL
GUARDRAIL REMOVAL

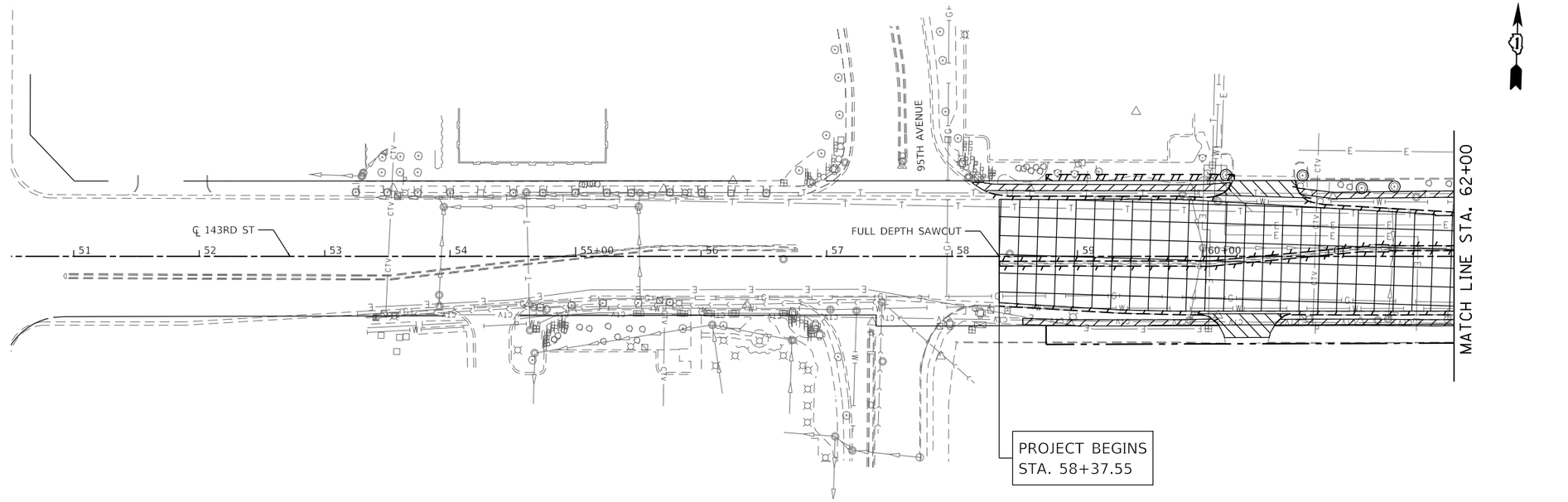

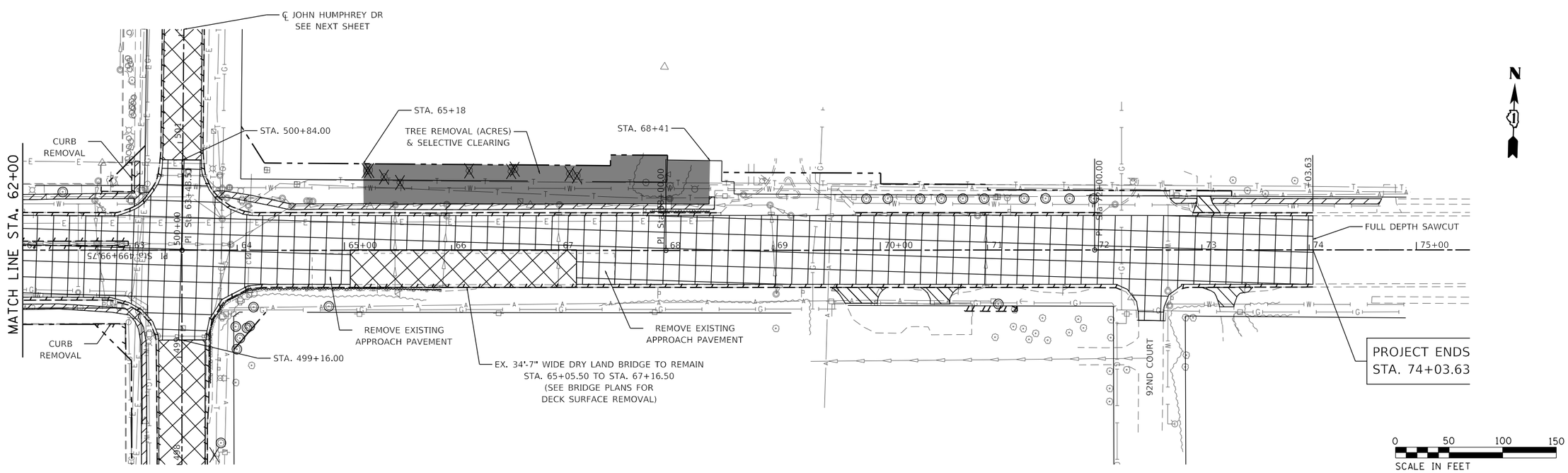

PLOT DRIVER = $PLTDRV1S
PEN TABLE = $PENTBL1S
FILE NAME = pw:\\patrickco-pw.bentley.com:patrickco-pw07\Documents\Orland Park\22277.005\12_Design\12.3_CADD\SHEETS\143HDsitcRemoval01.dgn

PATRICK ENGINEERING

USER NAME = dtroyer	DESIGNED -	REVISED -	
	DRAWN -	REVISED -	
PLOT SCALE = 100.0000 ' / in.	CHECKED -	REVISED -	
PLOT DATE = 12/3/2024	DATE - 12/03/24	REVISED -	

STATE OF ILLINOIS
DEPARTMENT OF TRANSPORTATION

JOHN HUMPHREY DRIVE AT 143RD STREET
REMOVAL PLAN

SCALE: 1" = 50' | SHEET 1 OF 5 SHEETS | STA. BEGIN TO STA. 75+00

F.A.U. RTE.	SECTION	COUNTY	TOTAL SHEETS	SHEET NO.
2520	16-00078-00-CH	COOK	228	29
		CONTRACT NO. 61K89		
		ILLINOIS	FED. AID PROJECT	

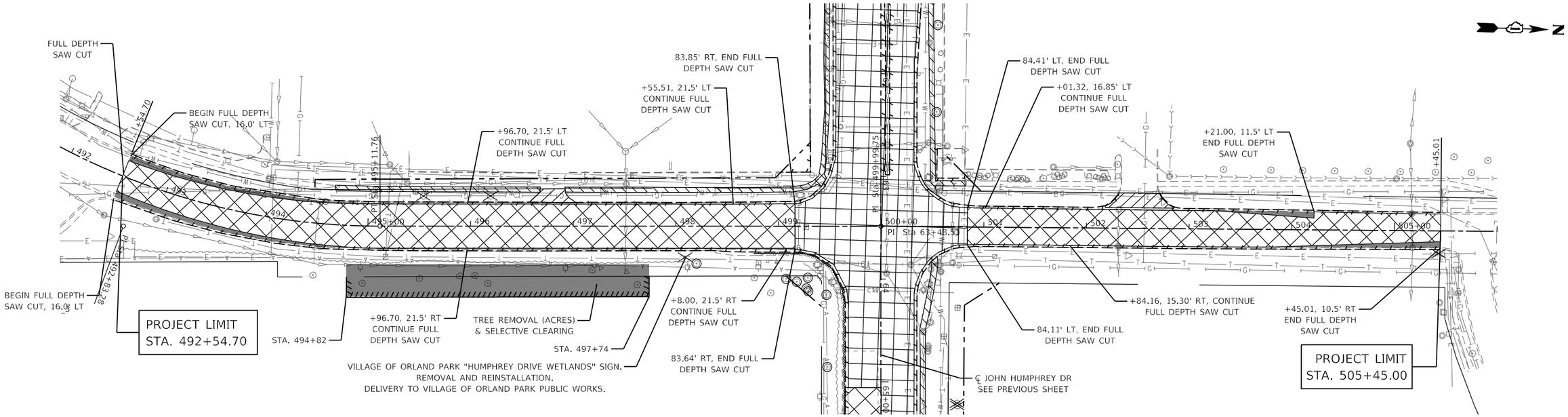

	PAVEMENT REMOVAL
	HMA SURFACE REMOVAL, 3"
	SAW CUT PAVEMENT & PAVEMENT REMOVAL
	SIDEWALK REMOVAL
	DRIVEWAY REMOVAL
	COMB. CONC. CURB & GUTTER REMOVAL
	TREE REMOVAL
	TREE TRUNK PROTECTION
	SIGN REMOVAL
	GUARDRAIL REMOVAL

0 50 100 150
SCALE IN FEET

PLOT DRIVER = $PLTDRVL$
PEN TABLE = $PENTBLL$
FILE NAME = pw:\\patrickco-pw.bentley.com:patrickco-pw-07\Documents\Orland Park\22277.005\12_Design\12.3_CADD\SHEETS\143HD-sht-Removal-02.dgn

PATRICK ENGINEERING

USER NAME = dtroyer	DESIGNED -	REVISED -	
	DRAWN -	REVISED -	
PLOT SCALE = 100.0000 ' / in.	CHECKED -	REVISED -	
PLOT DATE = 12/3/2024	DATE - 12/03/24	REVISED -	

STATE OF ILLINOIS
DEPARTMENT OF TRANSPORTATION

JOHN HUMPHREY DRIVE AT 143RD STREET
REMOVAL PLAN

SCALE: 1" = 50' | SHEET 2 OF 5 SHEETS | STA. 492+00 TO STA. 506+00

F.A.U. RTE.	SECTION	COUNTY	TOTAL SHEETS	SHEET NO.
2520	16-00078-00-CH	COOK	228	30
		CONTRACT NO. 61K89		
	ILLINOIS	FED. AID PROJECT		

EXISTING EPS (TO REMAIN)

EXISTING EPS (TO BE REMOVED)
(PAID FOR AS STRUCTURE EXCAVATION

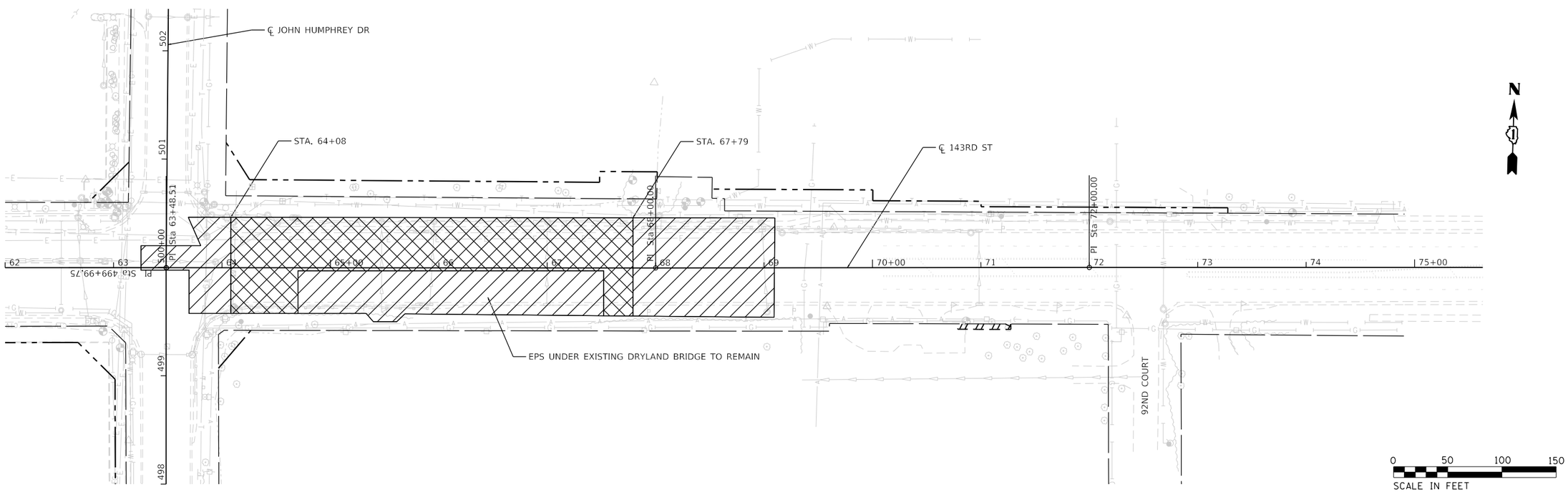

PLOT DRIVER = $PLTDRV$
PEN TABLE = $PENTBL$
FILE NAME = pw:\\patrickco-pw.bentley.com:patrickco-pw-07\Documents\Orland Park\22277.005\12_Design\12-3_CADD\SHEETS\143HD-Int-Removal-02a.dgn

PATRICK ENGINEERING

USER NAME = DT004	DESIGNED -	REVISED -	
	DRAWN -	REVISED -	
PLOT SCALE = 100.0000 ' / in.	CHECKED -	REVISED -	
PLOT DATE = 1/16/2025	DATE - 12/03/24	REVISED -	

STATE OF ILLINOIS
DEPARTMENT OF TRANSPORTATION

JOHN HUMPHREY DRIVE AT 143RD STREET
EPS REMOVAL PLAN

SCALE: 1" = 50' | SHEET 3 OF 5 SHEETS | STA. 62+00 TO STA. 75+00

F.A.U. RTE.	SECTION	COUNTY	TOTAL SHEETS	SHEET NO.
2520	16-00078-00-CH	COOK	228	31
		CONTRACT NO. 61K89		
		ILLINOIS	FED. AID PROJECT	

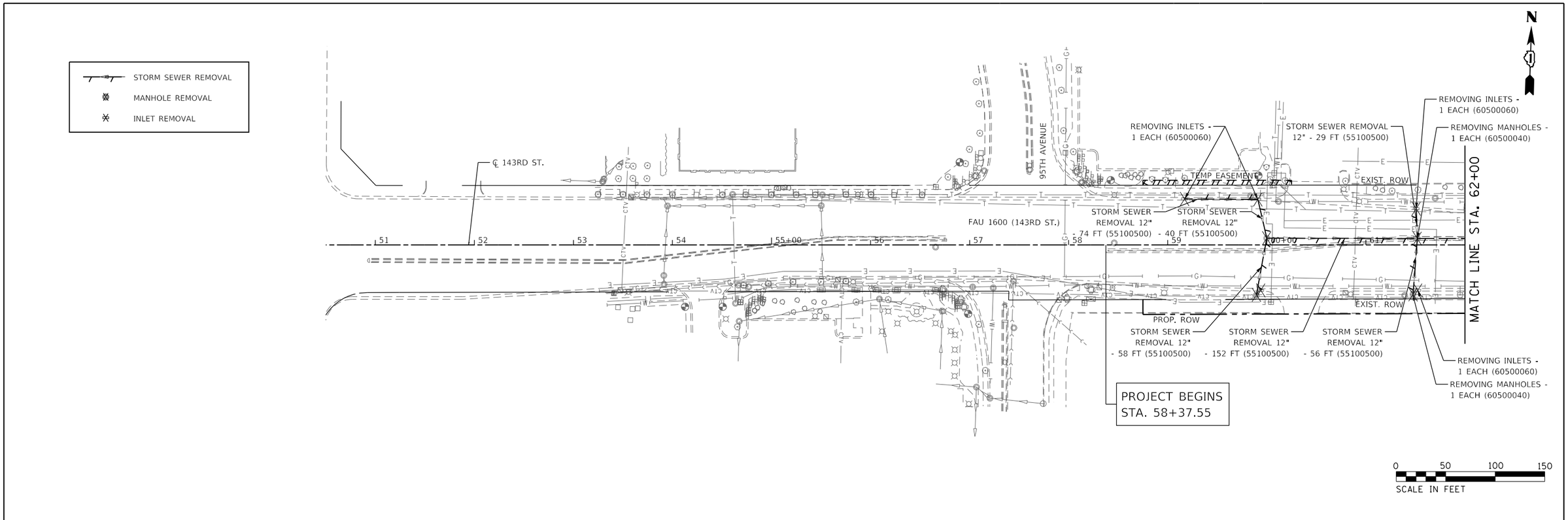

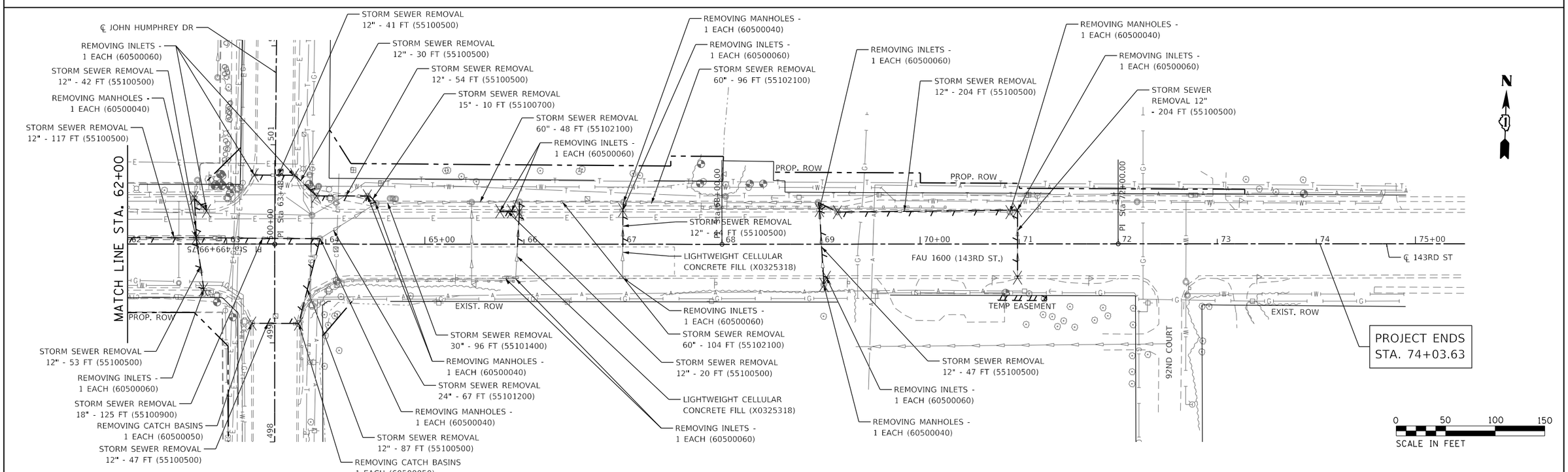

PLOT DRIVER = $PLTDRVLS
PEN TABLE = $PENTBLLS
FILE NAME = pw:\\patrickco-pw.bentley.com:patrickco-pw-07\Documents\Orland Park\22277.005\12_Design\12.3_CADD\SHEETS\143HD-sht-Removal-03.dgn

CHRISTOPHER B. BURKE ENGINEERING, LTD.
9575 W. Higgins Road, Suite 600
Rosemont, Illinois 60018
(847) 823-0500

USER NAME = dtroyer	DESIGNED -	REVISED -	
	DRAWN -	REVISED -	
PLOT SCALE = 100.0000 ' / in.	CHECKED -	REVISED -	
PLOT DATE = 12/3/2024	DATE - 12/03/24	REVISED -	

STATE OF ILLINOIS
DEPARTMENT OF TRANSPORTATION

JOHN HUMPHREY DRIVE AT 143RD STREET
DRAINAGE REMOVAL PLAN

SCALE: 1" = 50' | SHEET 4 OF 5 SHEETS | STA. BEGIN TO STA. 75+00

F.A.U. RTE.	SECTION	COUNTY	TOTAL SHEETS	SHEET NO.
2520	16-00078-00-CH	COOK	228	32
		CONTRACT NO. 61K89		
		ILLINOIS	FED. AID PROJECT	

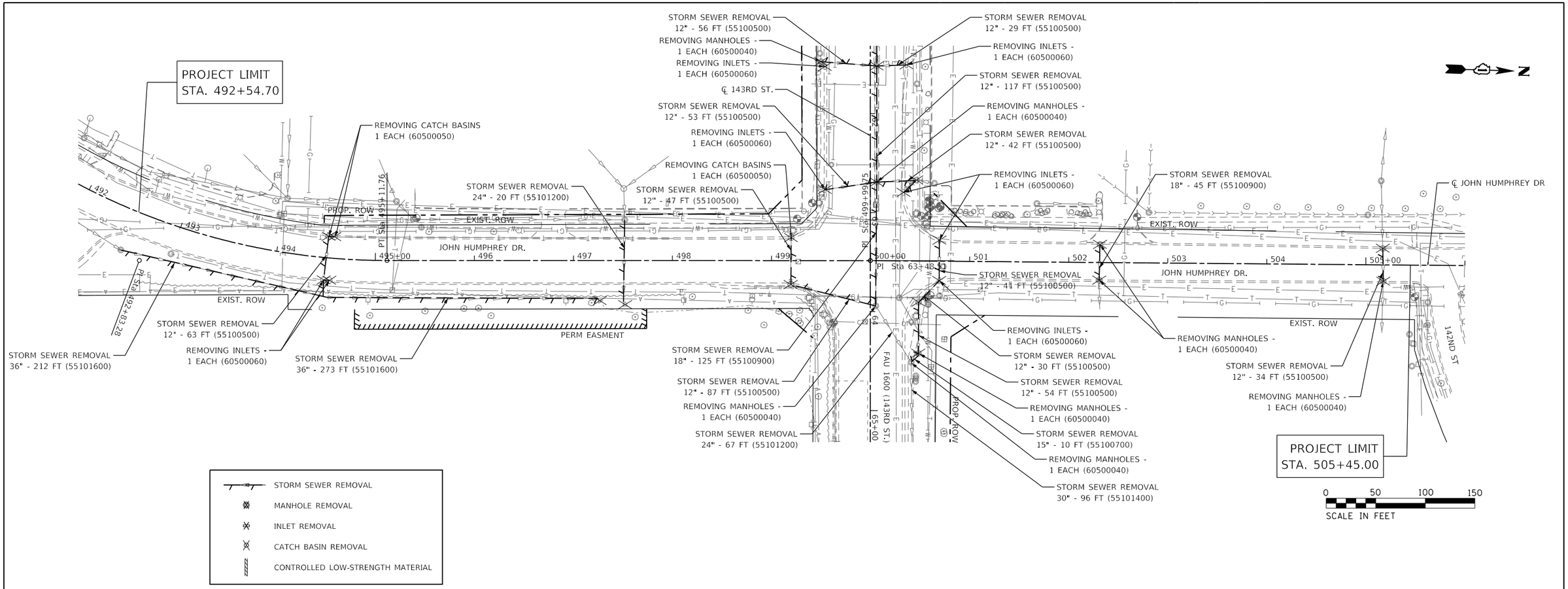

PLOT DRIVER = $PLTDRV$LS
PEN TABLE = $PENTBL$LS
FILE NAME = pw:\\patricksco-pw.bentley.com:patricksco-pw-07\Documents\Orland Park\22277.005\12_Design\12-3_CADD\SHEETS\143HD-Int-Removal-04.dgn

CHRISTOPHER B. BURKE ENGINEERING, LTD.
9575 W. Higgins Road, Suite 600
Rosemont, Illinois 60018
(847) 823-0500

USER NAME = dtroyer	DESIGNED -	REVISED -	
	DRAWN -	REVISED -	
PLOT SCALE = 100.0000 ' / in.	CHECKED -	REVISED -	
PLOT DATE = 12/3/2024	DATE - 12/03/24	REVISED -	

STATE OF ILLINOIS
DEPARTMENT OF TRANSPORTATION

JOHN HUMPHREY DRIVE AT 143RD STREET
DRAINAGE REMOVAL PLAN

SCALE: 1" = 50' | SHEET 5 OF 5 SHEETS | STA. 492+00 TO STA. 506+00

F.A.U. RTE.	SECTION	COUNTY	TOTAL SHEETS	SHEET NO.
2520	16-00078-00-CH	COOK	228	33
		CONTRACT NO. 61K89		
		ILLINOIS	FED. AID PROJECT	

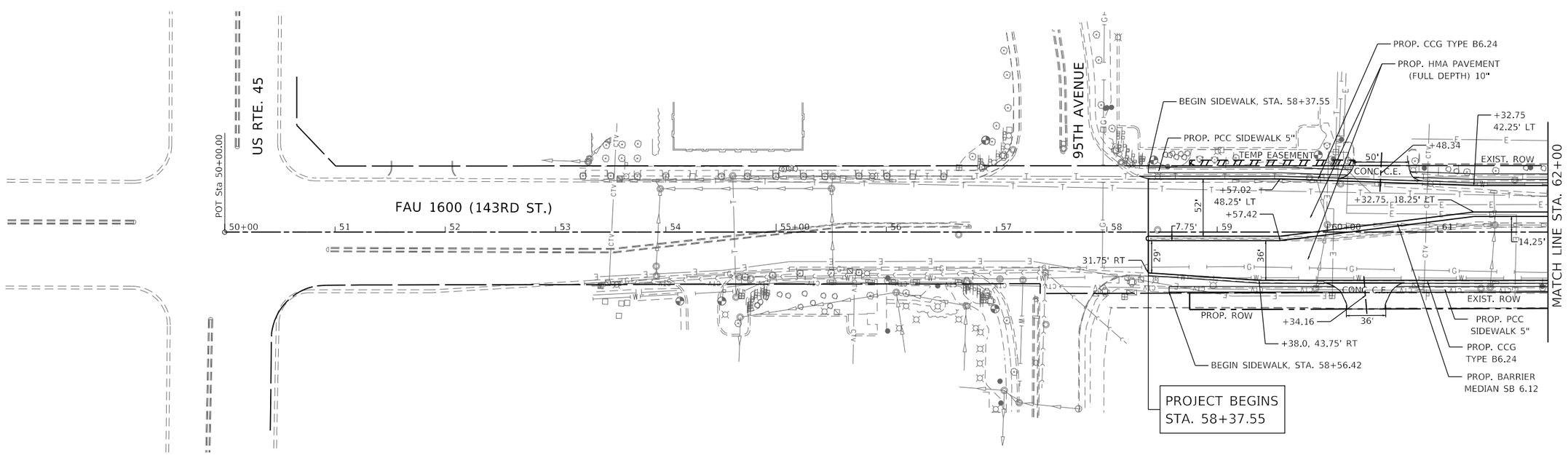

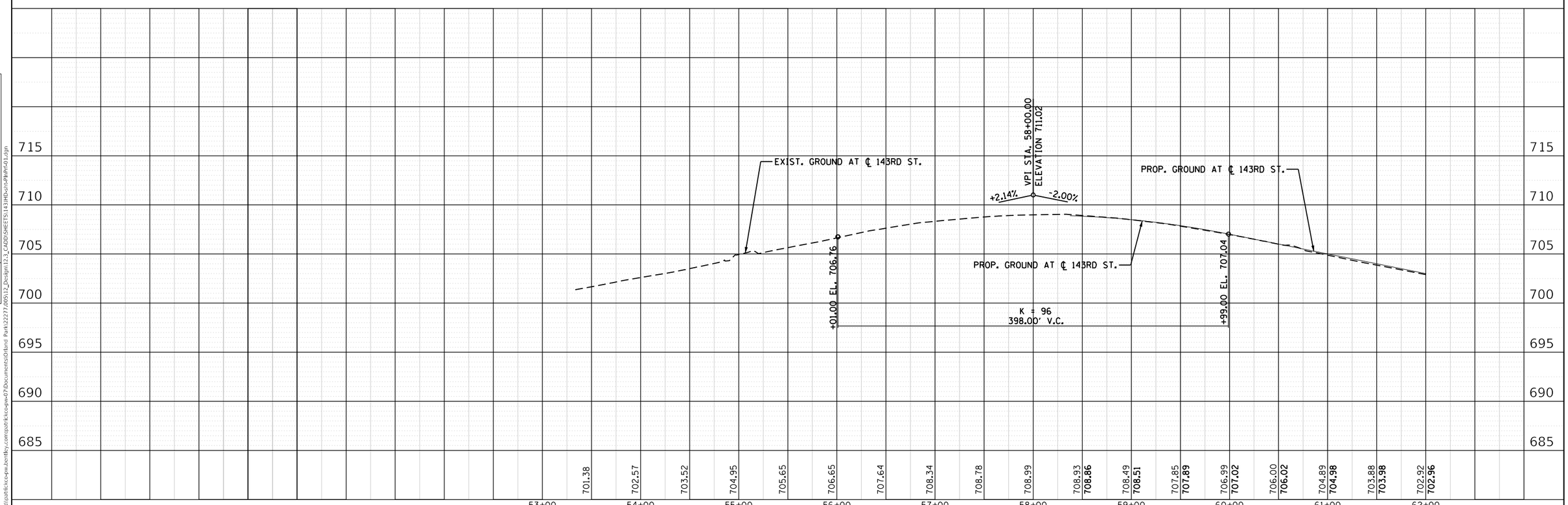

PLAN
SURVEYED
PLOTTED
ALIGNMENT CHECKED
RT. OF WAY CHECKED
CADD FILE NAME
NOTE BOOK
NO.
BY
DATE

PROFILE
SURVEYED
PLOTTED
GRADES CHECKED
B.M. NOTED
STRUCTURE NOTATNS CHKD
NOTE BOOK
NO.
BY
DATE

PLOT DRIVER = $PLTDRV$LS
PEN TABLE = $PENTBL$LS
FILE NAME = pw:\\patrickco-pw.bentley.com:patrickco-pw-07\Documents\Orland Park\22277.005\12_Ds=ljm\12-3_CADD\SHEETS\143HDs-Int-PlnPrf-01.dgn

PATRICK ENGINEERING

USER NAME = dtroyer	DESIGNED -	REVISED -
	DRAWN -	REVISED -
PLOT SCALE = 100.0000 ' / in.	CHECKED -	REVISED -
PLOT DATE = 12/5/2024	DATE - 12/03/24	REVISED -

STATE OF ILLINOIS
DEPARTMENT OF TRANSPORTATION

JOHN HUMPHREY DRIVE AT 143RD STREET
PLAN & PROFILE

SCALE: 1" = 50' | SHEET 1 OF 4 SHEETS | STA. BEGIN TO STA. 62+00

F.A.U. RTE.	SECTION	COUNTY	TOTAL SHEETS	SHEET NO.
2520	16-00078-00-CH	COOK	228	34

CONTRACT NO. 61K89

ILLINOIS | FED. AID PROJECT

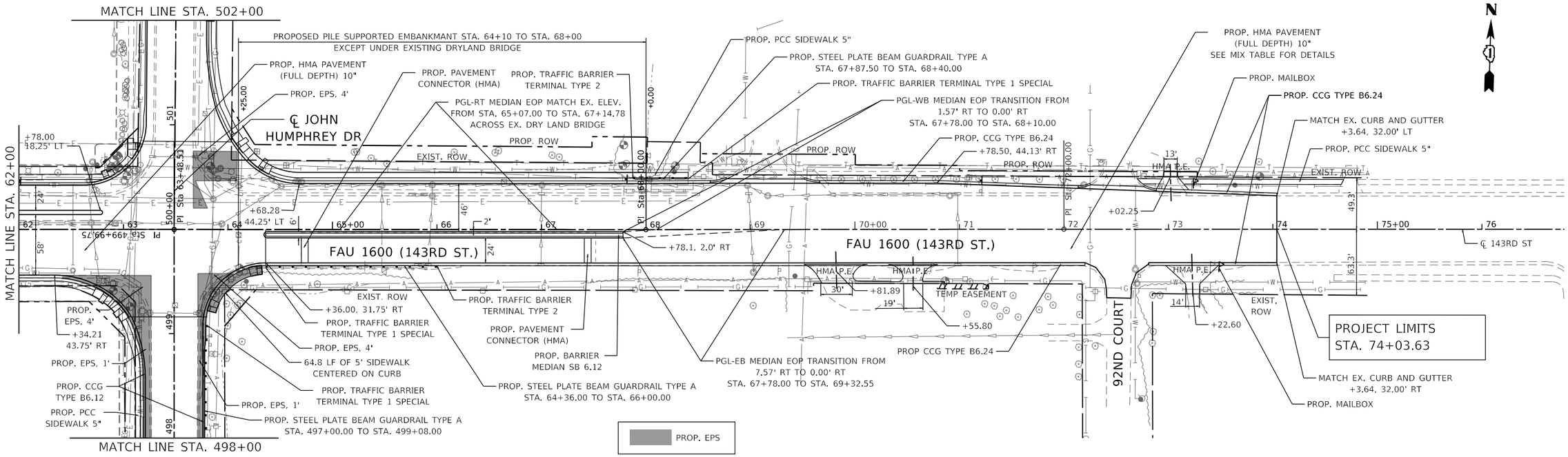

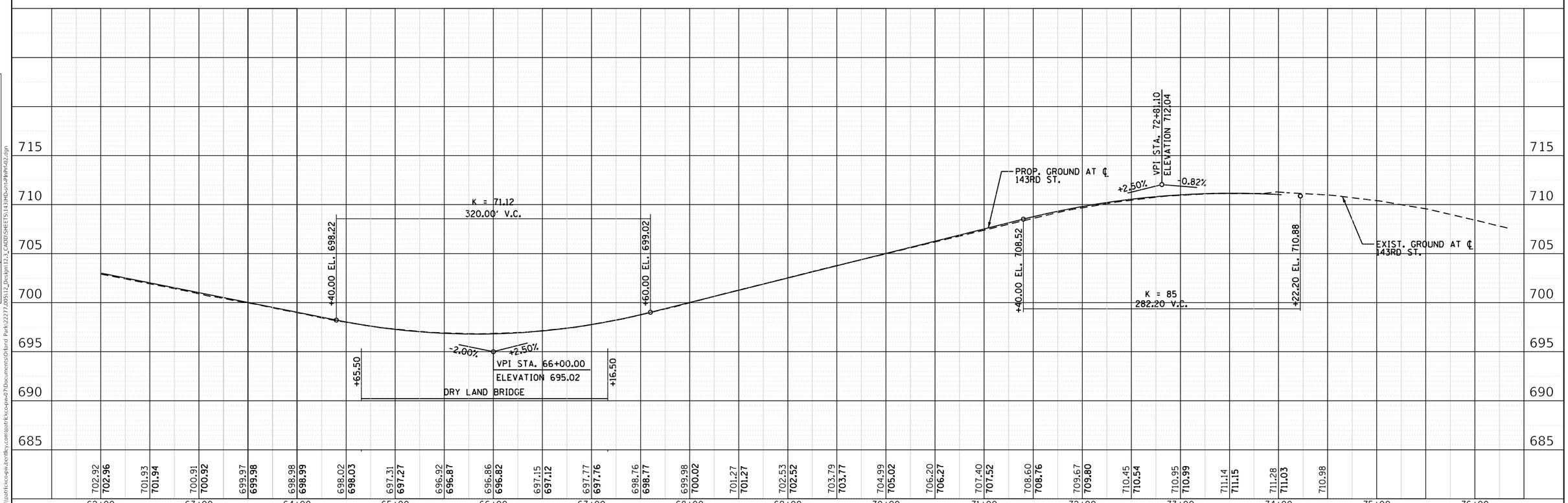

USER NAME = dtroyer	DESIGNED -	REVISED -
	DRAWN -	REVISED -
PLOT SCALE = 100.0000 ' / in.	CHECKED -	REVISED -
PLOT DATE = 12/5/2024	DATE - 12/03/24	REVISED -

PATRICK ENGINEERING

STATE OF ILLINOIS
DEPARTMENT OF TRANSPORTATION

JOHN HUMPHREY DRIVE AT 143RD STREET
PLAN & PROFILE

SCALE: 1" = 50' | SHEET 2 OF 4 SHEETS | STA. 62+00 TO STA. END

F.A.U. RTE.	SECTION	COUNTY	TOTAL SHEETS	SHEET NO.
2520	16-00078-00-CH	COOK	228	35

CONTRACT NO. 61K89

ILLINOIS | FED. AID PROJECT

PLOT DRIVER = $PLTDRVLS
PEN TABLE = $PENTBLLS
FILE NAME = pw:\\patrickco-pw.bentley.com:patrickco-pw-07\Documents\Orland Park\22277.005\12_Design\12-3_CADD\SHEETS\1433HD-sht-PlnPrf-02.dgn

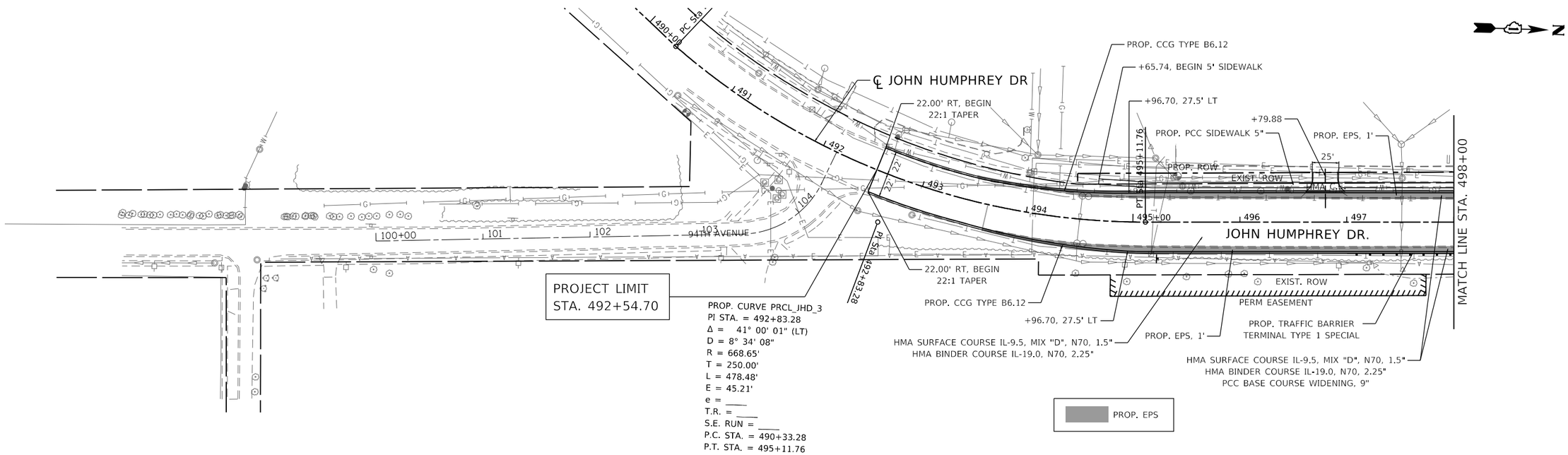

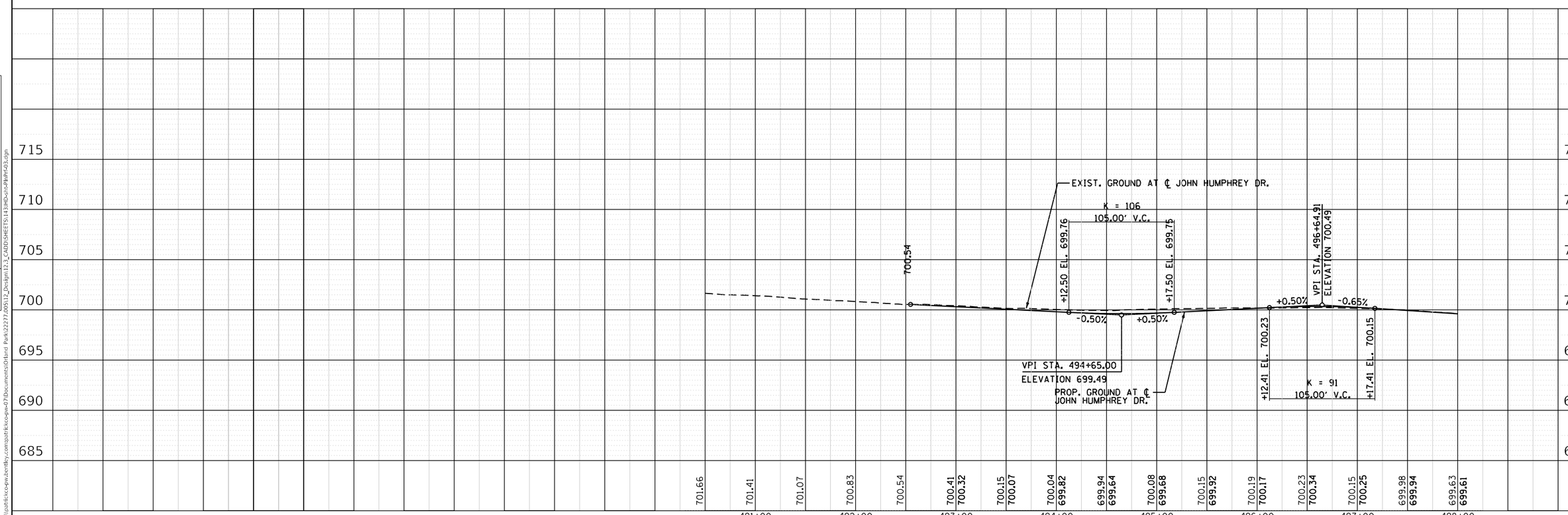

PLAN
NOTE BOOK NO.____
SURVEYED
PLOTTED
ALIGNMENT CHECKED
RT. OF WAY CHECKED
CADD FILE NAME
BY
DATE

PROFILE
NOTE BOOK NO.____
SURVEYED
PLOTTED
GRADES CHECKED
B.M. NOTED
STRUCTURE NOTATNS CHKD
BY
DATE

PLOT DRIVER = $PLTDRV$LS
PEN TABLE = $PENTBL$LS
FILE NAME = pw:\\patrickco-pw.bentley.com:patrickco-pw-07\Documents\Orland Park\22277.005\12_Design\12-3_CADD\SHEETS\143HD-Int-PlnPrf-03.dgn

PATRICK ENGINEERING

USER NAME = dtroyer	DESIGNED -	REVISED -
	DRAWN -	REVISED -
PLOT SCALE = 100.0000 ' / in.	CHECKED -	REVISED -
PLOT DATE = 12/5/2024	DATE - 12/03/24	REVISED -

STATE OF ILLINOIS
DEPARTMENT OF TRANSPORTATION

JOHN HUMPHREY DRIVE AT 143RD STREET
PLAN & PROFILE

SCALE: 1" = 50' | SHEET 3 OF 4 SHEETS | STA. BEGIN TO STA. 498+00

F.A.U. RTE.	SECTION	COUNTY	TOTAL SHEETS	SHEET NO.
2520	16-00078-00-CH	COOK	228	36

CONTRACT NO. 61K89

ILLINOIS | FED. AID PROJECT

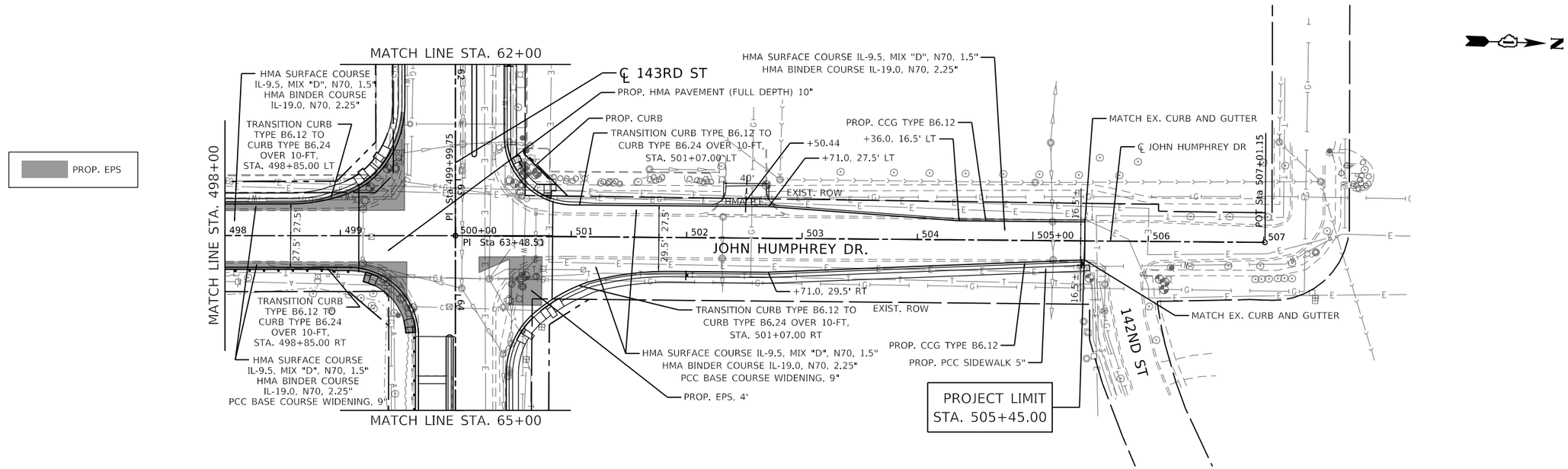

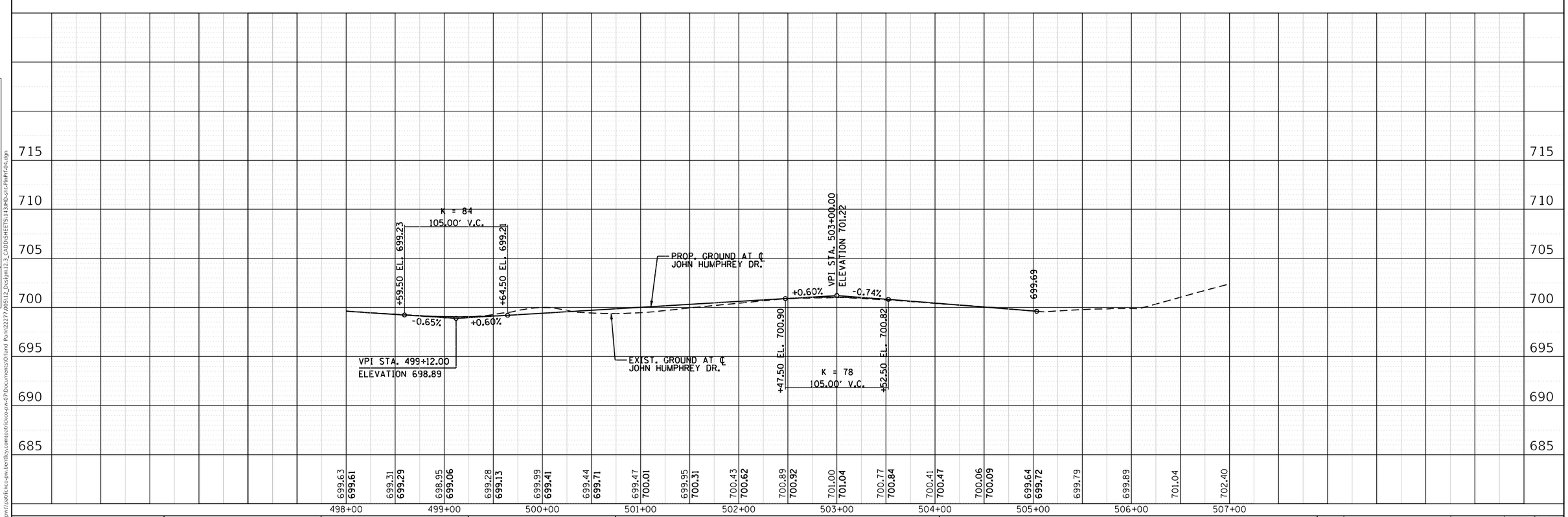

PLAN		BY	DATE
NOTE BOOK NO. ____	SURVEYED ____ PLOTTED ____ ALIGNMENT CHECKED ____ RT. OF WAY CHECKED ____ CADD FILE NAME ____		

PROFILE		BY	DATE
NOTE BOOK NO. ____	SURVEYED ____ PLOTTED ____ GRADES CHECKED ____ B.M. NOTED ____ STRUCTURE NOTATNS CHKD ____		

PLOT DRIVER = $PLTDRVLS
PEN TABLE = $PENTBLLS
FILE NAME = pw:\\patrickco-pw.bentley.com:patrickco-pw-07\Documents\Orland Park\22277.005\12_Design\12-3_CADD\SHEETS\1433HD-sht-PlnPrf-04.dgn

PATRICK ENGINEERING

USER NAME = dtroyer	DESIGNED -	REVISED -	
	DRAWN -	REVISED -	
PLOT SCALE = 100.0000 ' / in.	CHECKED -	REVISED -	
PLOT DATE = 12/5/2024	DATE - 12/03/24	REVISED -	

STATE OF ILLINOIS
DEPARTMENT OF TRANSPORTATION

JOHN HUMPHREY DRIVE AT 143RD STREET
PLAN & PROFILE

SCALE: 1" = 50' | SHEET 4 OF 4 SHEETS | STA. 498+00 TO STA. END

F.A.U. RTE.	SECTION	COUNTY	TOTAL SHEETS	SHEET NO.
2520	16-00078-00-CH	COOK	228	37
		CONTRACT NO. 61K89		
		ILLINOIS	FED. AID PROJECT	

SUGGESTED MAINTENANCE OF TRAFFIC STAGING

PRE-STAGE

1.REMOVE EXISTING BARRIER MEDIAN ON 143RD STREET WEST OF JOHN HUMPHREY DRIVE AND REPLACE WITH TEMPORARY PAVEMENT.

2.REMOVE EXISTING TRAFFIC SIGNALS AND LIGHT POLES AND INSTALL TEMPORARY TRAFFIC SIGNALS AND TEMPORARY LIGHTING.

STAGE I

1.SHIFT TRAFFIC ON 1-11' THROUGH LANE AND A 10' LEFT TURN LANE IN EACH DIRECTION ON JOHN HUMPHREY DRIVE.

2. REMOVE 2' PAVEMENT AND EXISTING COMBINATION CONCRETE CURB AND GUTTER ON EAST SIDE OF JOHN HUMPHREY DRIVE AND CONSTRUCT PAVEMENT WIDENING AND INSTALL NEW COMBINATION CONCRETE CURB AND GUTTER.

3.SHIFT TRAFFIC ON 1-11' THROUGH LANE AND 10' LEFT TURN LANE IN EACH DIRECTION ON THE SOUTH SIDE OF 143RD STREET.

4.REMOVE EXISTING PAVEMENT AND CONSTRUCT PILE SUPPORTED EMBANKMENT AND PAVEMENT RECONSTRUCTION WITH NEW COMBINATION CONCRETE CURB AND GUTTER.

STAGE II

1. REMOVE 2' PAVEMENT AND EXISTING COMBINATION CONCRETE CURB AND GUTTER ON WEST SIDE OF JOHN HUMPHREY DRIVE AND CONSTRUCT PAVEMENT WIDENING AND INSTALL NEW COMBINATION CONCRETE CURB AND GUTTER.

2.SHIFT TRAFFIC TO THE NORTH SIDE OF 143RD STREET AND PROVIDE 1-11' THROUGH LANE AND 10' LEFT TURN LANE IN EACH DIRECTION.

3.REMOVE EXISTING PAVEMENT AND CONSTRUCT PILE SUPPORTED EMBANKMENT EAST AND WEST OF THE EXISTING DRY LAND BRIDGE AND PAVEMENT RECONSTRUCTION WITH NEW COMBINATION CONCRETE CURB AND GUTTER.

STAGE III

1.SHIFT TRAFFIC TO THE OUTSIDE LANES AND PROVIDE 1-11' THROUGH TRAFFIC LANE AND 1-10' LEFT TURN LANE IN EACH DIRECTION ON JOHN HUMPHREY DRIVE.

2.ON 143RD STREET, WEST OF JOHN HUMPHREY DRIVE, SHIFT TRAFFIC TO THE OUTSIDE LANES AND PROVIDE 1-12' THROUGH LANE AND 12' TURN LANES IN THE WESTBOUND DIRECTION AND 1-11'THROUGH LANE AND 11' TURN LANES IN THE EASTBOUND DIRECTION.

3.RECONSTRUCT 143RD STREET LEFT TURN LANE TO 95TH AVENUE AND CONSTRUCT NEW CONCRETE BARRIER MEDIAN.

4.REMOVE TEMPORARY TRAFFIC SIGNALS AND INSTALL NEW TRAFFIC SIGNAL EQUIPMENT ON 143RD STREET AT 95TH AVENUE AND AT JOHN HUMPHREY DRIVE.

5.INSTALL NEW HIGHWAY LIGHTING EQUIPMENT AND THEN REMOVE TEMPORARY LIGHTING.

GENERAL MAINTENANCE OF TRAFFIC NOTES

1.ALL TRAFFIC CONTROL MATERIAL AND DEVICES SHALL CONFORM TO THE TRAFFIC CONTROL PLANS AND THE LATEST EDITION OF THE ILLINOIS MANUAL OF UNIFORM TRAFFIC CONTROL DEVICES FOR STREETS AND HIGHWAYS.

2.SUGGUSTED TRAFFIC CONTROL AS DENOTED ON THE PLANS IS INTENDED TO BE USED
AS A GENERAL GUIDE FOR THE SEQUENCE OF CONSTRUCTION OF THE WORK. NO CHANGES WILL BE PERMITTED WITHOUT THE WRITTEN APPROVAL OF THE ENGINEER.

3.ACCESS TO ENTRANCES SHALL BE MAINTAINED. WHEN A PROPERTY IS SERVED BY A SINGLE ENTRANCE, CONSTRUCTION OF THE ENTRANCE SHALL BE COMPLETED ONE HALF AT A TIME IN ORDER TO MAINTAIN ACCESS. WHEN A PROPERTY IS SERVED BY MULTIPLE ENTRANCES, ONE OF THE ENTRANCES SHALL REMAIN OPEN AT ALL TIMES.

4.THE EXACT NUMBER, LOCATION, AND SPACING OF ALL SIGNS AND TRAFFIC CONTROL DEVICES MAY BE ADJUSTED TO FIT THE FIELD CONDITIONS, AS DIRECTED BY THE ENGINEER.

5.REMOVE ANY EXISTING PAVEMENT MARKINGS, AS REQUIRED, IF IN CONFLICT WITH THE TEMPORARY PAVEMENT MARKINGS FOR TRAFFIC CONTROL AND PROTECTION AS SHOWN ON THE PLANS. TEMPORARY PAVEMENT MARKINGS WHICH FALL BEYOND THE PROJECT LIMITS SHALL BE PAVEMENT MARKING TAPE, TYPE IV.

6.THE FURNISHING, INSTALLATION, RELOCATION, AND REMOVAL OF ALL TRAFFIC CONTROL DEVICES SHOWN ON THESE MAINTENANCE OF TRAFFIC PLANS AND ON THE APPLICABLE IDOT TRAFFIC CONTROL STANDARDS SHALL BE PAID FOR UNDER THE PAY ITEM "TRAFFIC CONTROL AND PROTECTION, (SPECIAL)".

7.PORTABLE CHANGEABLE MESSAGE SIGNS SHALL BE PROVIDED EASTBOUND AND WESTBOUND ON 143RD STREET, SOUTHBOUND AND NORTHBOUND ON JOHN HUMPHRY DRIVE WHEN NECESSARY AS DIRECTED BY THE ENGINEER, TO ADVISE MOTORISTS OF STAGE CHANGES.

8.ALL WORKERS AND/OR FLAGGERS SIGNS SHALL BE REMOVED OR COVERED WHEN WORKER OR FLAGGERS WILL NOT BE PRESENT FOR MORE THAN ONE HOUR.

M4-9BL-3024

1

M4-9BR-3024

2

R11-I101-2418

3

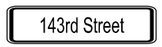

4

5

PLOT DRIVER = SPLTDRVLS
PEN TABLE = SPENTBLLS
FILE NAME = pw:\\patrickco-pw.bentley.com:patrickco-pw-07\Documents\Orland Park\22277.005\12_Design\12.3_CADD\SHEETS\1433HD-int-MOT-Detour.dgn

PATRICK ENGINEERING

USER NAME = dtroyer	DESIGNED -	REVISED -	
	DRAWN -	REVISED -	
PLOT SCALE = 20.0000 ' / in.	CHECKED -	REVISED -	
PLOT DATE = 12/3/2024	DATE -	REVISED -	

STATE OF ILLINOIS
DEPARTMENT OF TRANSPORTATION

JOHN HUMPHREY DRIVE AT 143RD STREET
SIDEWALK DETOUR PLAN

SHEET OF SHEETS

F.A.U. RTE.	SECTION	COUNTY	TOTAL SHEETS	SHEET NO.
2520	16-00078-00-CH	COOK	228	39
		CONTRACT NO. 61K89		
		ILLINOIS	FED. AID PROJECT	

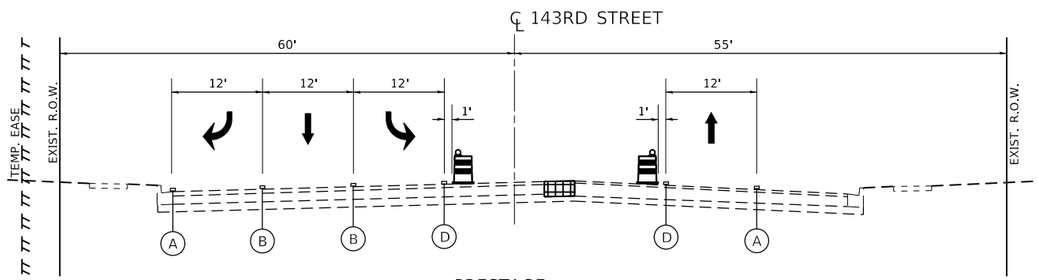

PRESTAGE
143RD STREET
(WEST OF JOHN HUMPHREY DRIVE)
STA. 58+00 TO STA. 60+50

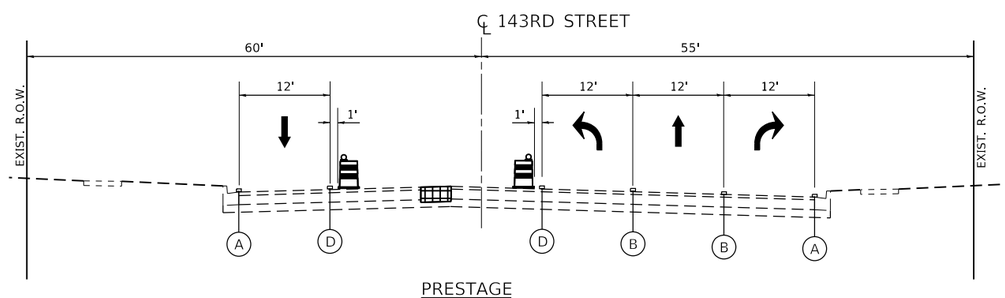

PRESTAGE
143RD STREET
(WEST OF JOHN HUMPHREY DRIVE)
STA. 60+50 TO STA. 63+50

LEGEND

▦	REMOVE EXISTING MEDIAN AND CONSTRUCT TEMPORARY PAVEMENT
	DRUMS
	TEMPORARY CONCRETE BARRIER
(A)	TEMPORARY PAVEMENT MARKING - LINE 4" - TYPE IV TAPE, SOLID WHITE
(B)	TEMPORARY PAVEMENT MARKING - LINE 6" - TYPE IV TAPE, SOLID WHITE
(C)	TEMPORARY PAVEMENT MARKING - LINE 4" - TYPE IV TAPE, SOLID DOUBLE YELLOW @ 11" C-C
(D)	TEMPORARY PAVEMENT MARKING - LINE 4" - TYPE IV TAPE, SOLID YELLOW

PLOT DRIVER = $PLTDRV$LS
PEN TABLE = $PENTBL$LS
FILE NAME = pw:\\patrickco-pw.bentley.com:patrickco-pw-07\Documents\Orland Park\22277.005\12_Design\12-3_CADD\SHEETS\143HD-int-NOT Typical.dgn

PATRICK ENGINEERING

USER NAME = dtroyer	DESIGNED -	REVISED -	
	DRAWN -	REVISED -	
PLOT SCALE = 20.0000 ' / in.	CHECKED -	REVISED -	
PLOT DATE = 12/3/2024	DATE - 12/03/24	REVISED -	

STATE OF ILLINOIS
DEPARTMENT OF TRANSPORTATION

JOHN HUMPHREY DRIVE AT 143RD STREET
SUGGUSTED TRAFFIC CONTROL TYPICAL SECTIONS – PRESTAGE

SCALE: NTS | SHEET 1 OF 4 SHEETS

F.A.U. RTE.	SECTION	COUNTY	TOTAL SHEETS	SHEET NO.
2520	16-00078-00-CH	COOK	228	40
		CONTRACT NO. 61K89		
		ILLINOIS	FED. AID PROJECT	

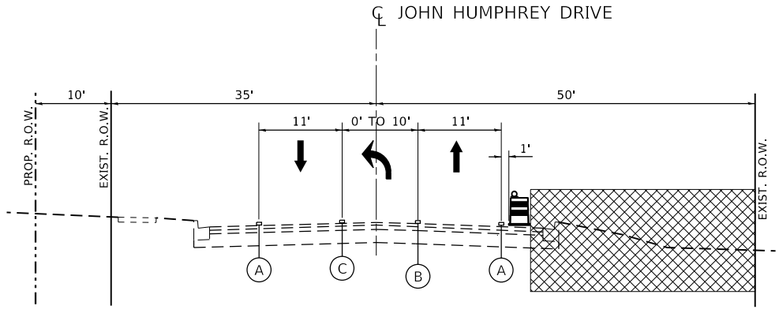

STAGE 1
JOHN HUMPHREY DRIVE
(SOUTH OF 143RD)
STA. 492+54 TO STA. 499+37

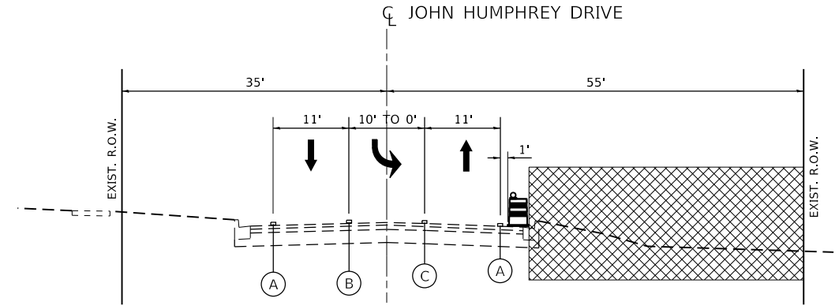

STAGE 1
JOHN HUMPHREY DRIVE
(NORTH OF 143RD)
STA. 500+50 TO STA. 505+40

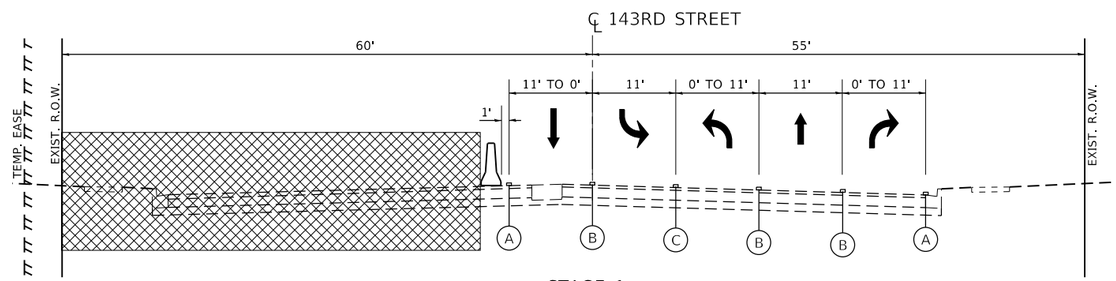

STAGE 1
143RD STREET
(WEST OF JOHN HUMPHREY DRIVE)
STA. 58+35 TO STA. 63+50

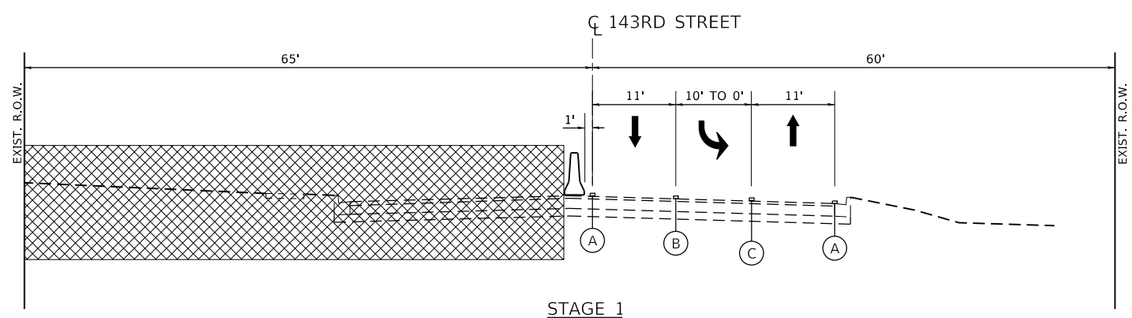

STAGE 1
143RD STREET
(EAST OF JOHN HUMPHREY DRIVE)
STA. 64+00 TO STA. 74+00

NOTES:

1. SEE BRIDGE TYPICAL SECTIONS BETWEEN STA. 64+67.20 AND STA. 67+14.80.

LEGEND

- CONSTRUCTION WORK ZONE
- DRUMS
- TEMPORARY CONCRETE BARRIER
- (A) TEMPORARY PAVEMENT MARKING - LINE 4" - TYPE IV TAPE, SOLID WHITE
- (B) TEMPORARY PAVEMENT MARKING - LINE 6" - TYPE IV TAPE, SOLID WHITE
- (C) TEMPORARY PAVEMENT MARKING - LINE 4" - TYPE IV TAPE, SOLID DOUBLE YELLOW @ 11" C-C
- (D) TEMPORARY PAVEMENT MARKING - LINE 4" - TYPE IV TAPE, SOLID YELLOW

PLOT DRIVER = $PLTDRV$LS
PEN TABLE = $PENTBL$LS
FILE NAME = pw:\\patrickco-pw.bentley.com:patrickco-pw-07\Documents\Orland Park\22277.005\12_Design\12-3_CADD\SHEETS\143HD-int-NOT Typical.dgn

PATRICK ENGINEERING

USER NAME = dtroyer	DESIGNED -	REVISED -	
	DRAWN -	REVISED -	
PLOT SCALE = 20.0000 ' / in.	CHECKED -	REVISED -	
PLOT DATE = 12/3/2024	DATE -	REVISED -	

STATE OF ILLINOIS
DEPARTMENT OF TRANSPORTATION

JOHN HUMPHREY DRIVE AT 143RD STREET
SUGGESTED TRAFFIC CONTROL TYPICAL SECTIONS – STAGE 1

SCALE: NTS | SHEET 2 OF 4 SHEETS

F.A.U. RTE.	SECTION	COUNTY	TOTAL SHEETS	SHEET NO.
2520	16-00078-00-CH	COOK	228	41
		CONTRACT NO. 61K89		
	ILLINOIS	FED. AID PROJECT		

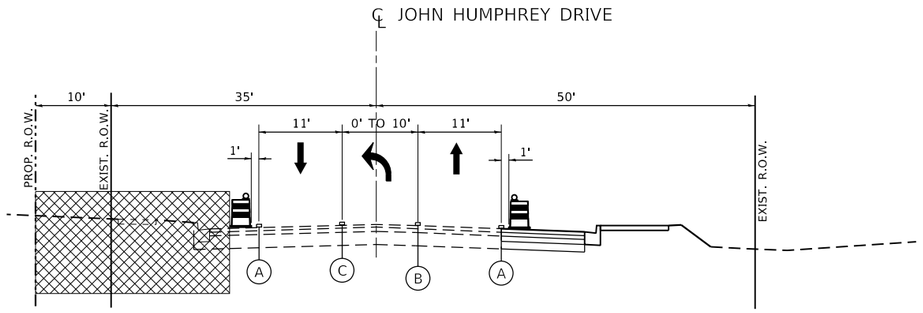

STAGE 2
JOHN HUMPHREY DRIVE
(SOUTH OF 143RD)
STA. 492+54 TO STA. 499+37

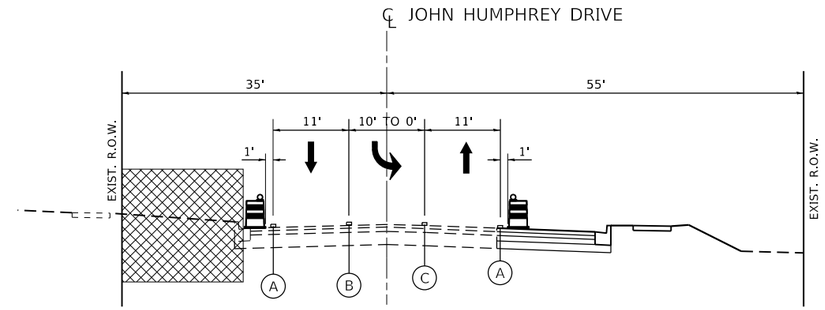

STAGE 2
JOHN HUMPHREY DRIVE
(NORTH OF 143RD)
STA. 500+50 TO STA. 505+40

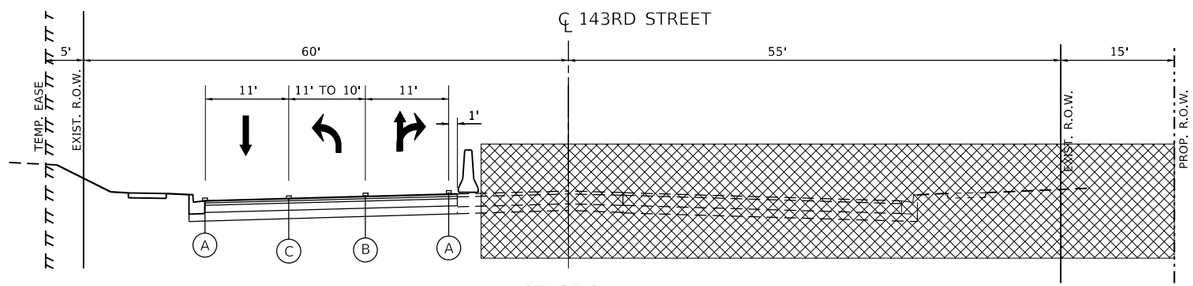

STAGE 2
143RD STREET
(WEST OF JOHN HUMPHREY DRIVE)
STA. 58+35 TO STA. 63+50

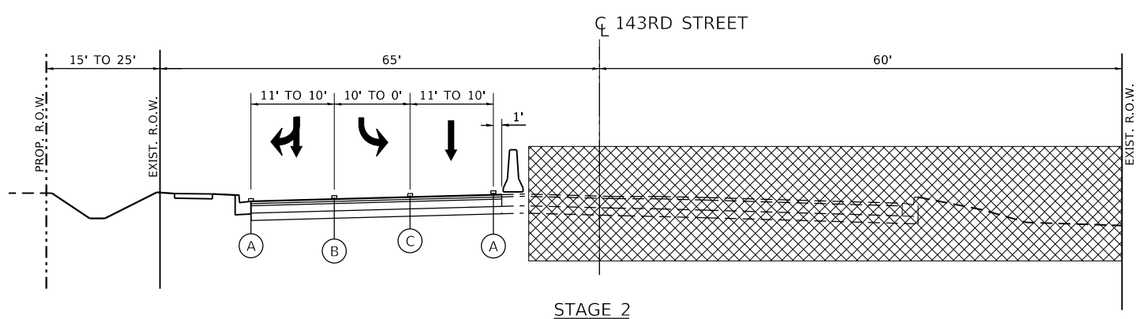

STAGE 2
143RD STREET
(EAST OF JOHN HUMPHREY DRIVE)
STA. 64+00 TO STA. 74+00

LEGEND

- CONSTRUCTION WORK ZONE
- DRUMS
- TEMPORARY CONCRETE BARRIER
- (A) TEMPORARY PAVEMENT MARKING - LINE 4" - TYPE IV TAPE, SOLID WHITE
- (B) TEMPORARY PAVEMENT MARKING - LINE 6" - TYPE IV TAPE, SOLID WHITE
- (C) TEMPORARY PAVEMENT MARKING - LINE 4" - TYPE IV TAPE, SOLID DOUBLE YELLOW @ 11" C-C
- (D) TEMPORARY PAVEMENT MARKING - LINE 4" - TYPE IV TAPE, SOLID YELLOW

NOTES:

1. SEE BRIDGE TYPICAL SECTIONS BETWEEN STA. 64+67.20 AND STA. 67+14.80.

PLOT DRIVER = SPLTDRV15
PEN TABLE = SPENTBL15
FILE NAME = pw:\\patrickco-pw.bentley.com:patrickco-pw-07\Documents\Orland Park\22277.005\12_Design\12-3_CADD\SHEETS\143HD-int-NOT Typical.dgn

PATRICK ENGINEERING

USER NAME = dtroyer	DESIGNED -	REVISED -	
	DRAWN -	REVISED -	
PLOT SCALE = 20.0000 ' / in.	CHECKED -	REVISED -	
PLOT DATE = 12/3/2024	DATE - 12/03/24	REVISED -	

STATE OF ILLINOIS
DEPARTMENT OF TRANSPORTATION

JOHN HUMPHREY DRIVE AT 143RD STREET
SUGGESTED TRAFFIC CONTROL TYPICAL SECTIONS – STAGE 2

SCALE: NTS | SHEET 3 OF 4 SHEETS

F.A.U. RTE.	SECTION	COUNTY	TOTAL SHEETS	SHEET NO.
2520	16-00078-00-CH	COOK	228	42
		CONTRACT NO. 61K89		
	ILLINOIS	FED. AID PROJECT		

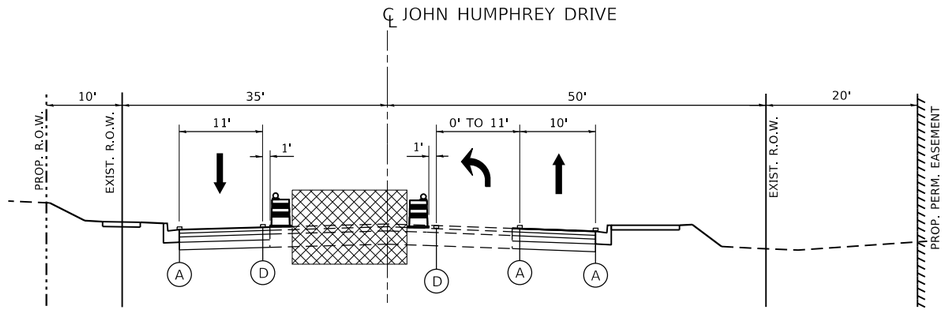

STAGE 3
JOHN HUMPHREY DRIVE
(SOUTH OF 143RD)
STA. 492+54 TO STA. 499+37

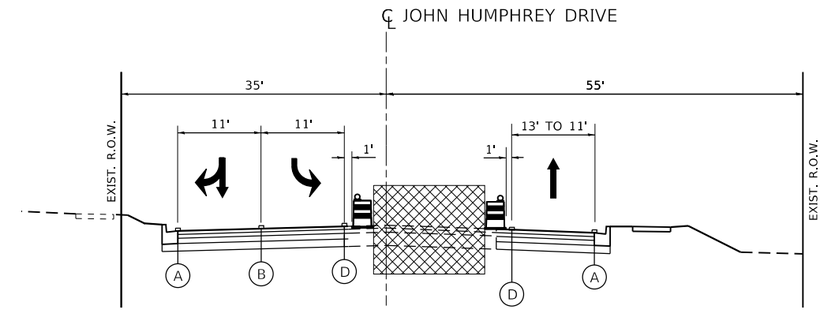

STAGE 3
JOHN HUMPHREY DRIVE
(NORTH OF 143RD)
STA. 500+50 TO STA. 505+40

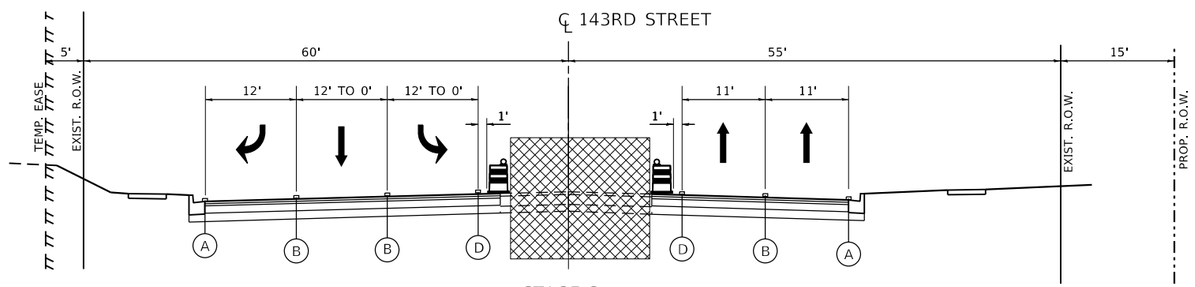

STAGE 3
143RD STREET
(WEST OF JOHN HUMPHREY DRIVE)
STA. 58+35 TO STA. 60+50

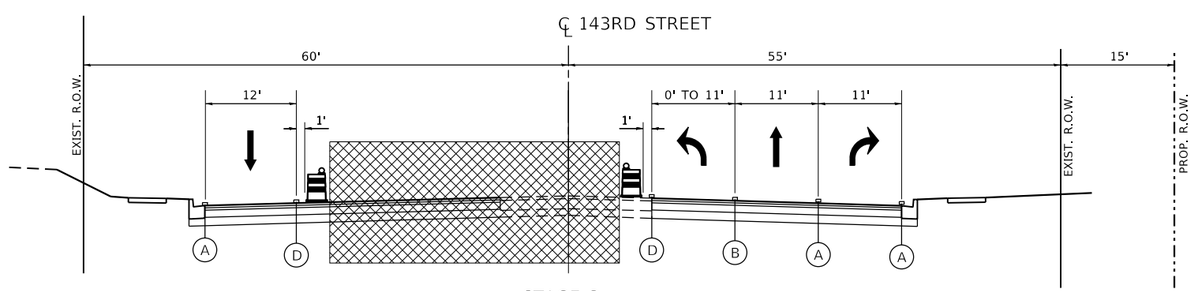

STAGE 3
143RD STREET
(WEST OF JOHN HUMPHREY DRIVE)
STA. 60+50 TO STA. 63+50

LEGEND

- CONSTRUCTION WORK ZONE
- DRUMS
- TEMPORARY CONCRETE BARRIER
- (A) TEMPORARY PAVEMENT MARKING - LINE 4" - TYPE IV TAPE, SOLID WHITE
- (B) TEMPORARY PAVEMENT MARKING - LINE 6" - TYPE IV TAPE, SOLID WHITE
- (C) TEMPORARY PAVEMENT MARKING - LINE 4" - TYPE IV TAPE, SOLID DOUBLE YELLOW @ 11" C-C
- (D) TEMPORARY PAVEMENT MARKING - LINE 4" - TYPE IV TAPE, SOLID YELLOW

PLOT DRIVER = $PLTDRVL$
PEN TABLE = $PENTBLL$
FILE NAME = pw://patrickco-pw.bentley.com:patrickco-pw-07/Documents/Orland Park\22277.005\12_Design\12.3_CADD\SHEETS\143HD-int-MOT Typical.dgn

PATRICK ENGINEERING

USER NAME = dtroyer	DESIGNED -	REVISED -	
	DRAWN -	REVISED -	
PLOT SCALE = 20.0000 ' / in.	CHECKED -	REVISED -	
PLOT DATE = 12/3/2024	DATE - 12/03/24	REVISED -	

STATE OF ILLINOIS
DEPARTMENT OF TRANSPORTATION

JOHN HUMPHREY DRIVE AT 143RD STREET
SUGGESTED TRAFFIC CONTROL TYPICAL SECTIONS – STAGE 3

SCALE: NTS | SHEET 4 OF 4 SHEETS

F.A.U. RTE.	SECTION	COUNTY	TOTAL SHEETS	SHEET NO.
2520	16-00078-00-CH	COOK	228	43
		CONTRACT NO. 61K89		
	ILLINOIS	FED. AID PROJECT		

MAINTENANCE OF TRAFFIC LEGEND:

1. TEMPORARY PAVEMENT MARKING - LINE 4" - TYPE IV TAPE, SOLID WHITE
2. TEMPORARY PAVEMENT MARKING - LINE 6" - TYPE IV TAPE, SOLID WHITE
3. TEMPORARY PAVEMENT MARKING - LINE 4" - TYPE IV TAPE, SOLID DOUBLE YELLOW @ 11" C-C
4. TEMPORARY PAVEMENT MARKING - LINE 4" - TYPE IV TAPE, SOLID YELLOW
5. TEMPORARY PAVEMENT MARKING - LINE 6" - TYPE IV TAPE, (6' SKIP - 2' DASH) WHITE
6. TEMPORARY PAVEMENT MARKING - LINE 8" - TYPE IV TAPE, SOLID WHITE

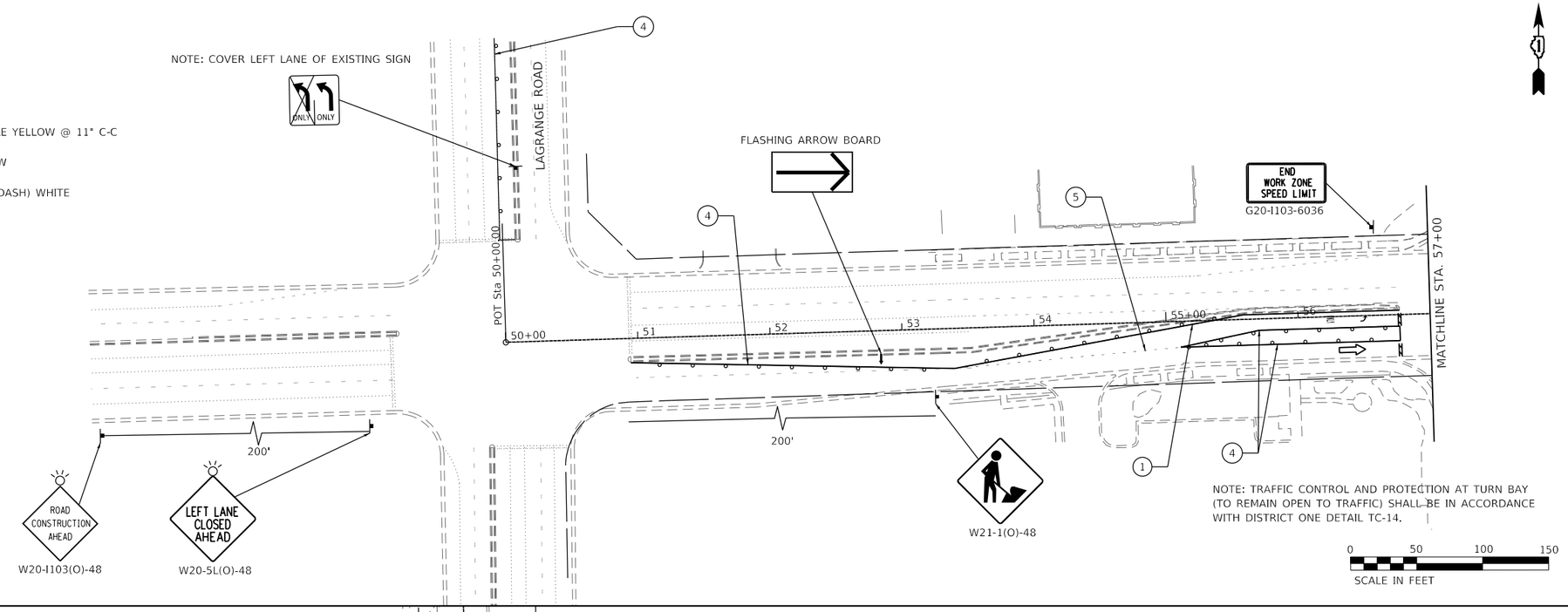

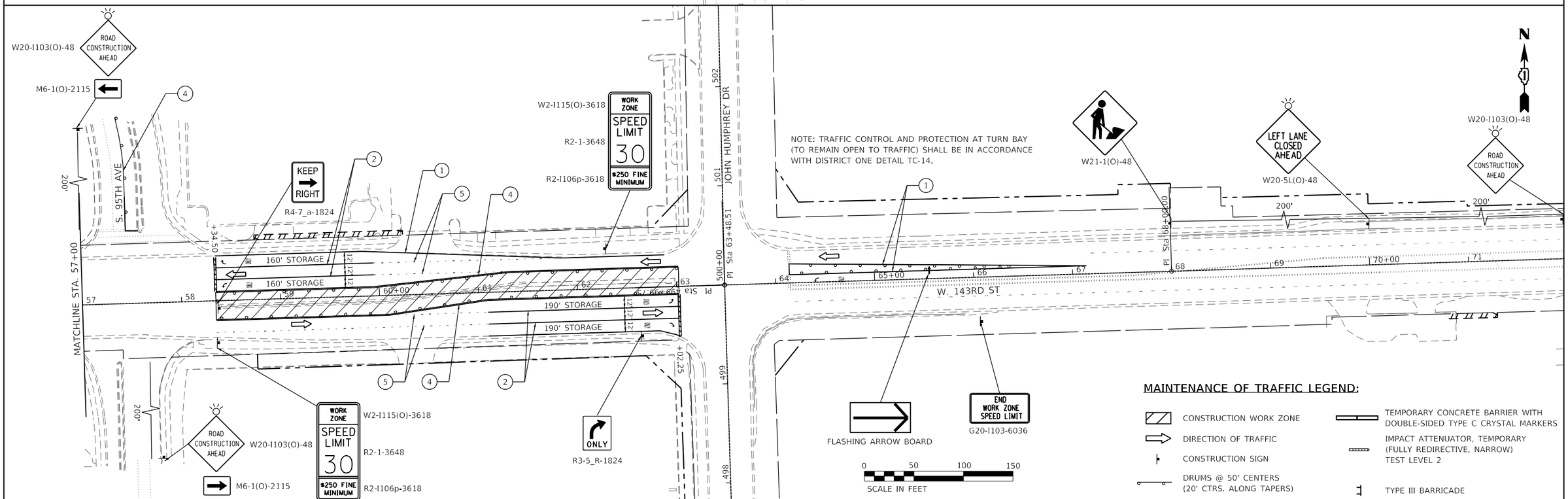

MAINTENANCE OF TRAFFIC LEGEND:

- CONSTRUCTION WORK ZONE
- DIRECTION OF TRAFFIC
- CONSTRUCTION SIGN
- DRUMS @ 50' CENTERS (20' CTRS. ALONG TAPERS)
- TEMPORARY CONCRETE BARRIER WITH DOUBLE-SIDED TYPE C CRYSTAL MARKERS
- IMPACT ATTENUATOR, TEMPORARY (FULLY REDIRECTIVE, NARROW) TEST LEVEL 2
- TYPE III BARRICADE

PLOT DRIVER = $PLTDRVLS
PEN TABLE = $PENTBLLS
FILE NAME = pw:\\patrickco-pw.bentley.com:patrickco-pw-07\Documents\Orland Park\22277.00512_Design\12.3_CADD\SHEETS\0160010-143HD-A000-MOT-143 STAGE 0-01.dgn

PATRICK ENGINEERING

USER NAME = dtroyer	DESIGNED -	REVISED -	
	DRAWN -	REVISED -	
PLOT SCALE = 100:0.0000 ':' / in.	CHECKED -	REVISED -	
PLOT DATE = 12/9/2024	DATE - 12/03/24	REVISED -	

STATE OF ILLINOIS
DEPARTMENT OF TRANSPORTATION

SUGGESTED TRAFFIC CONTROL – PRESTAGE
W. 143RD STREET

SCALE: | SHEET 1 OF 10 SHEETS | STA. TO STA.

F.A.U. RTE.	SECTION	COUNTY	TOTAL SHEETS	SHEET NO.
2520	16-00078-00-CH	COOK	228	44
		CONTRACT NO. 61K89		
		ILLINOIS	FED. AID PROJECT	

NOTE: TRAFFIC CONTROL AND PROTECTION AT TURN BAY (TO REMAIN OPEN TO TRAFFIC) SHALL BE IN ACCORDANCE WITH DISTRICT ONE DETAIL TC-14.

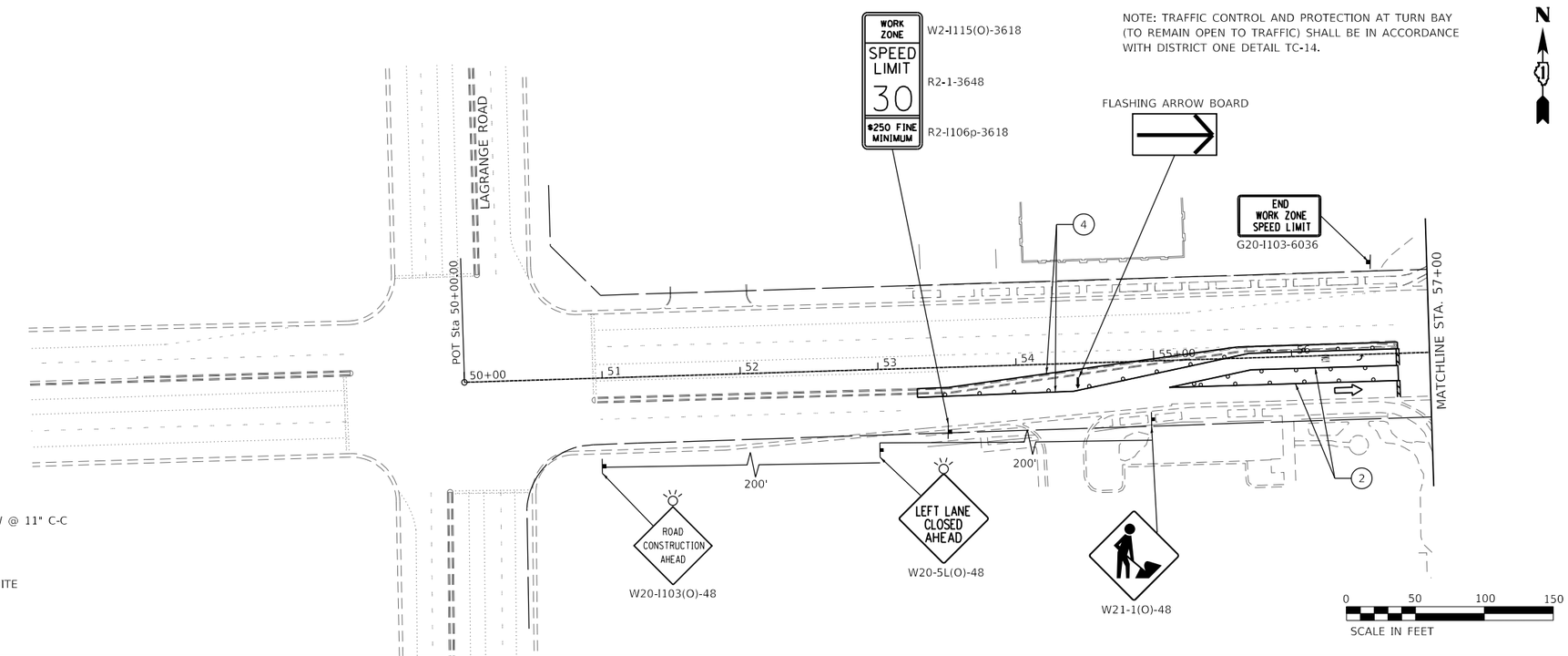

MAINTENANCE OF TRAFFIC LEGEND:

1. TEMPORARY PAVEMENT MARKING - LINE 4" - TYPE IV TAPE, SOLID WHITE
2. TEMPORARY PAVEMENT MARKING - LINE 6" - TYPE IV TAPE, SOLID WHITE
3. TEMPORARY PAVEMENT MARKING - LINE 4" - TYPE IV TAPE, SOLID DOUBLE YELLOW @ 11" C-C
4. TEMPORARY PAVEMENT MARKING - LINE 4" - TYPE IV TAPE, SOLID YELLOW
5. TEMPORARY PAVEMENT MARKING - LINE 6" - TYPE IV TAPE, (6' SKIP - 2' DASH) WHITE
6. TEMPORARY PAVEMENT MARKING - LINE 8" - TYPE IV TAPE, SOLID WHITE

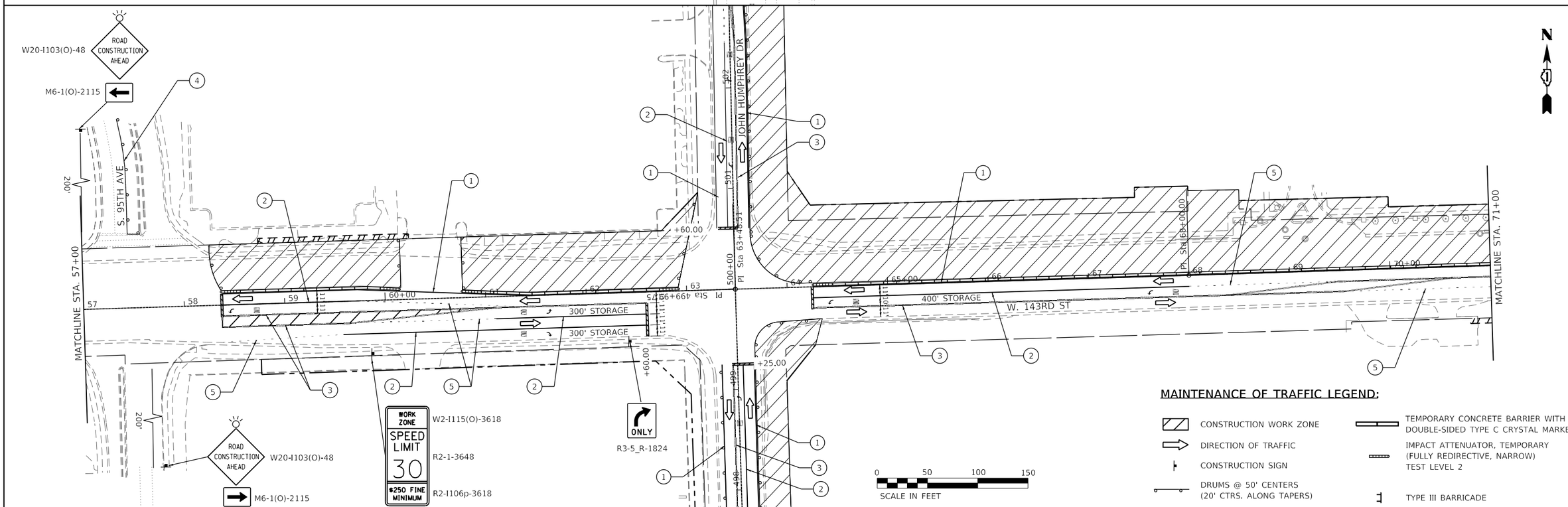

MAINTENANCE OF TRAFFIC LEGEND:

- CONSTRUCTION WORK ZONE
- DIRECTION OF TRAFFIC
- CONSTRUCTION SIGN
- DRUMS @ 50' CENTERS (20' CTRS. ALONG TAPERS)
- TEMPORARY CONCRETE BARRIER WITH DOUBLE-SIDED TYPE C CRYSTAL MARKERS
- IMPACT ATTENUATOR, TEMPORARY (FULLY REDIRECTIVE, NARROW) TEST LEVEL 2
- TYPE III BARRICADE

PLOT DRIVER = $PLTDRVLS
PEN TABLE = $PENTBLLS
FILE NAME = pw://patrickco-pw.bentley.com:patrickco-pw-07/Documents/Orland Park\22277.005\2_Design\2-3_CADD\SHEETS\0160010-143HD-A000-MOT-143 STAGE 1-01.dgn

PATRICK ENGINEERING

USER NAME = dtroyer	DESIGNED -	REVISED -	
	DRAWN -	REVISED -	
PLOT SCALE = 100:0.0000 ':' / in.	CHECKED -	REVISED -	
PLOT DATE = 12/9/2024	DATE - 12/03/24	REVISED -	

STATE OF ILLINOIS
DEPARTMENT OF TRANSPORTATION

SUGGESTED TRAFFIC CONTROL – STAGE 1
W. 143RD STREET

SCALE: | SHEET 2 OF 10 SHEETS | STA. TO STA.

F.A.U. RTE.	SECTION	COUNTY	TOTAL SHEETS	SHEET NO.
2520	16-00078-00-CH	COOK	228	45
		CONTRACT NO. 61K89		
		ILLINOIS	FED. AID PROJECT	

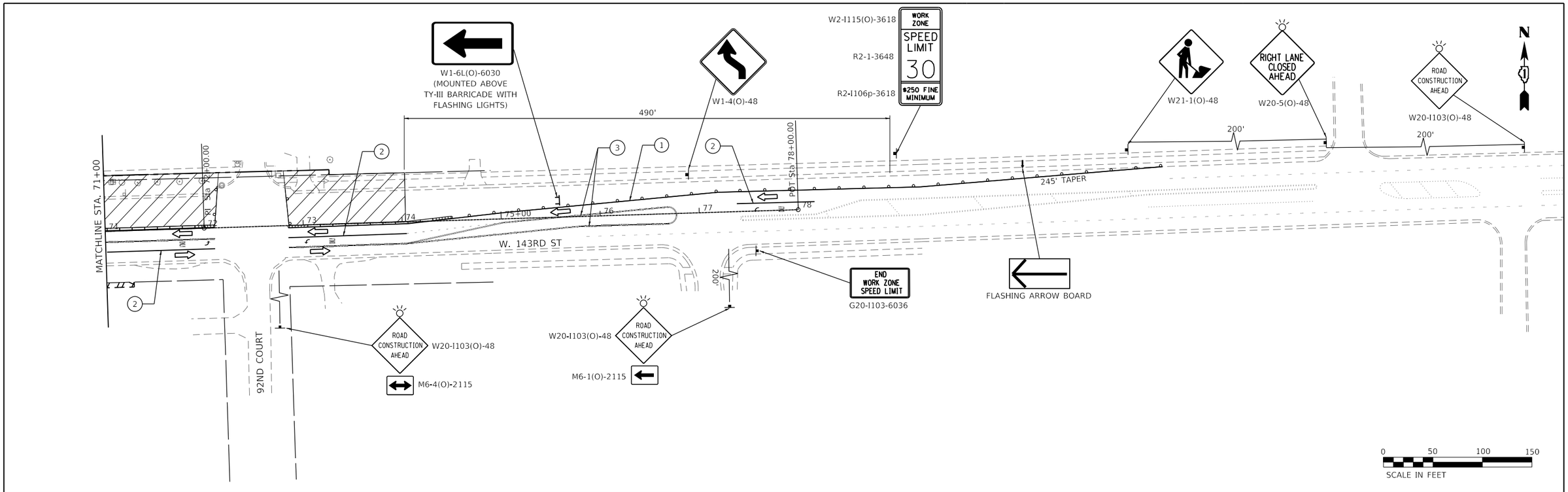

MAINTENANCE OF TRAFFIC LEGEND:

1. TEMPORARY PAVEMENT MARKING - LINE 4" - TYPE IV TAPE, SOLID WHITE
2. TEMPORARY PAVEMENT MARKING - LINE 6" - TYPE IV TAPE, SOLID WHITE
3. TEMPORARY PAVEMENT MARKING - LINE 4" - TYPE IV TAPE, SOLID DOUBLE YELLOW @ 11" C-C
4. TEMPORARY PAVEMENT MARKING - LINE 4" - TYPE IV TAPE, SOLID YELLOW
5. TEMPORARY PAVEMENT MARKING - LINE 6" - TYPE IV TAPE, (6' SKIP - 2' DASH) WHITE
6. TEMPORARY PAVEMENT MARKING - LINE 8" - TYPE IV TAPE, SOLID WHITE

MAINTENANCE OF TRAFFIC LEGEND:

- CONSTRUCTION WORK ZONE
- DIRECTION OF TRAFFIC
- CONSTRUCTION SIGN
- DRUMS @ 50' CENTERS (20' CTRS. ALONG TAPERS)
- TEMPORARY CONCRETE BARRIER WITH DOUBLE-SIDED TYPE C CRYSTAL MARKERS
- IMPACT ATTENUATOR, TEMPORARY (FULLY REDIRECTIVE, NARROW) TEST LEVEL 2
- TYPE III BARRICADE

PLOT DRIVER = $PLTDRV1$
PEN TABLE = $PENTBL1.S
FILE NAME = pw:\\patrickco-pw.bentley.com:patrickco-pw-01\Documents\Orland Park\22277.005\12_Design\12-3_CADD\SHEETS\016001b-143HD-000-MOT-143 STAGE 1-02.dgn

PATRICK ENGINEERING

USER NAME = dtroyer	DESIGNED -	REVISED -	
	DRAWN -	REVISED -	
PLOT SCALE = 100:0.0000 ':" / in.	CHECKED -	REVISED -	
PLOT DATE = 12/9/2024	DATE - 12/03/24	REVISED -	

STATE OF ILLINOIS
DEPARTMENT OF TRANSPORTATION

SUGGESTED TRAFFIC CONTROL – STAGE 1
W. 143RD STREET

SCALE: | SHEET 3 OF 10 SHEETS | STA. TO STA.

F.A.U. RTE.	SECTION	COUNTY	TOTAL SHEETS	SHEET NO.
2520	16-00078-00-CH	COOK	228	46

CONTRACT NO. 61K89

ILLINOIS | FED. AID PROJECT

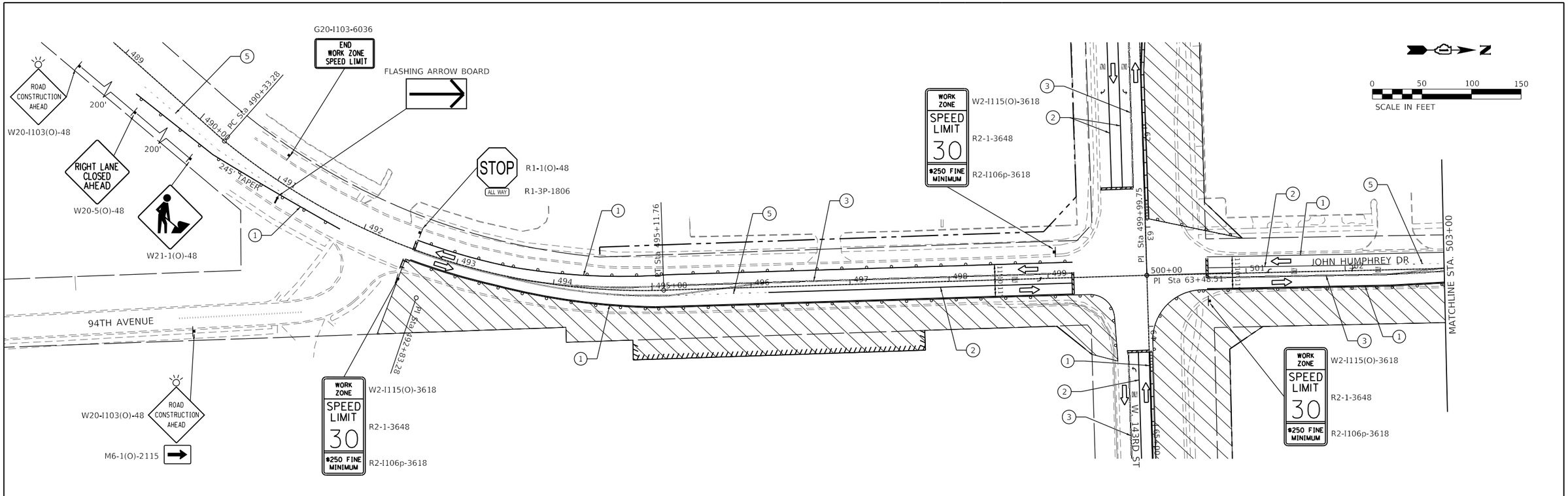

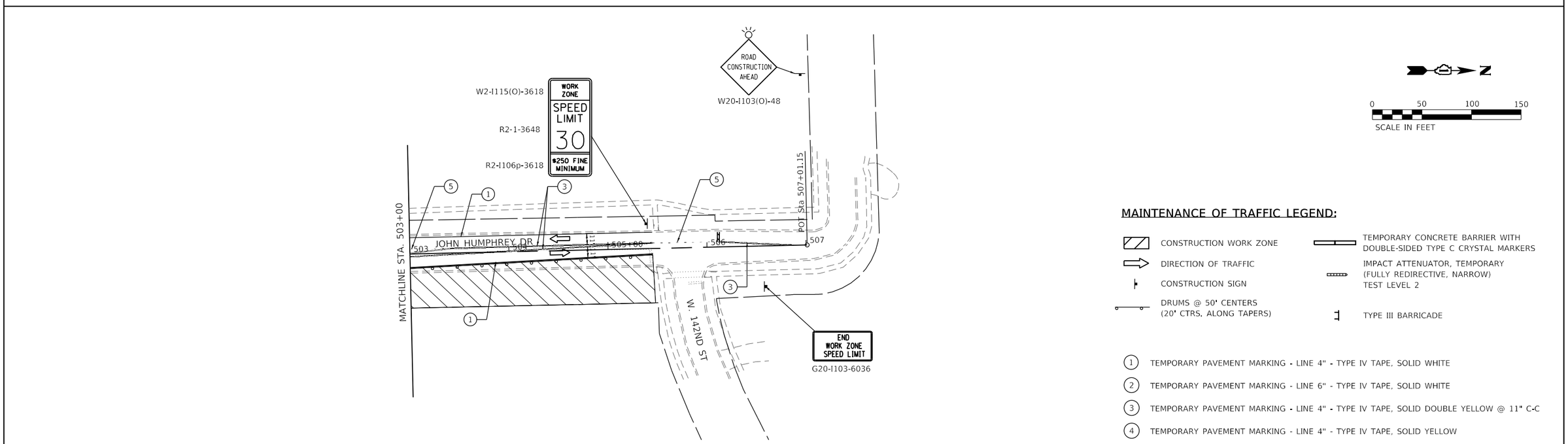

MAINTENANCE OF TRAFFIC LEGEND:

- CONSTRUCTION WORK ZONE
- DIRECTION OF TRAFFIC
- CONSTRUCTION SIGN
- DRUMS @ 50' CENTERS (20' CTRS. ALONG TAPERS)
- TEMPORARY CONCRETE BARRIER WITH DOUBLE-SIDED TYPE C CRYSTAL MARKERS
- IMPACT ATTENUATOR, TEMPORARY (FULLY REDIRECTIVE, NARROW) TEST LEVEL 2
- TYPE III BARRICADE

1. TEMPORARY PAVEMENT MARKING - LINE 4" - TYPE IV TAPE, SOLID WHITE
2. TEMPORARY PAVEMENT MARKING - LINE 6" - TYPE IV TAPE, SOLID WHITE
3. TEMPORARY PAVEMENT MARKING - LINE 4" - TYPE IV TAPE, SOLID DOUBLE YELLOW @ 11" C-C
4. TEMPORARY PAVEMENT MARKING - LINE 4" - TYPE IV TAPE, SOLID YELLOW
5. TEMPORARY PAVEMENT MARKING - LINE 6" - TYPE IV TAPE, (6' SKIP - 2' DASH) WHITE
6. TEMPORARY PAVEMENT MARKING - LINE 8" - TYPE IV TAPE, SOLID WHITE

PATRICK ENGINEERING

USER NAME = dtroyer	DESIGNED -	REVISED -	
	DRAWN -	REVISED -	
PLOT SCALE = 100:0.0000 ':' / in.	CHECKED -	REVISED -	
PLOT DATE = 12/9/2024	DATE - 12/03/24	REVISED -	

STATE OF ILLINOIS
DEPARTMENT OF TRANSPORTATION

SUGGESTED TRAFFIC CONTROL – STAGE 1
JOHN HUMPHREY DRIVE

SHEET 4 OF 10 SHEETS STA. TO STA.

F.A.U. RTE.	SECTION	COUNTY	TOTAL SHEETS	SHEET NO.
2520	16-00078-00-CH	COOK	228	47

CONTRACT NO. 61K89

ILLINOIS FED. AID PROJECT

PLOT DRIVER = $PLTDRVLS
PEN TABLE = $PENTBLLS
FILE NAME = pw:\\patrickco-pw.bentley.com:patrickco-pw-07\Documents\Orland Park\22277.005\12_Design\12.3_CADD\SHEETS\0160010-143HD\000-M07-JHD STAGE 1.dgn

MAINTENANCE OF TRAFFIC LEGEND:

1. TEMPORARY PAVEMENT MARKING - LINE 4" - TYPE IV TAPE, SOLID WHITE
2. TEMPORARY PAVEMENT MARKING - LINE 6" - TYPE IV TAPE, SOLID WHITE
3. TEMPORARY PAVEMENT MARKING - LINE 4" - TYPE IV TAPE, SOLID DOUBLE YELLOW @ 11" C-C
4. TEMPORARY PAVEMENT MARKING - LINE 4" - TYPE IV TAPE, SOLID YELLOW
5. TEMPORARY PAVEMENT MARKING - LINE 6" - TYPE IV TAPE, (6' SKIP - 2' DASH) WHITE
6. TEMPORARY PAVEMENT MARKING - LINE 8" - TYPE IV TAPE, SOLID WHITE
7. TEMPORARY PAVEMENT MARKING - LINE 8" - TYPE IV TAPE, (9' SKIP - 3' DASH) WHITE

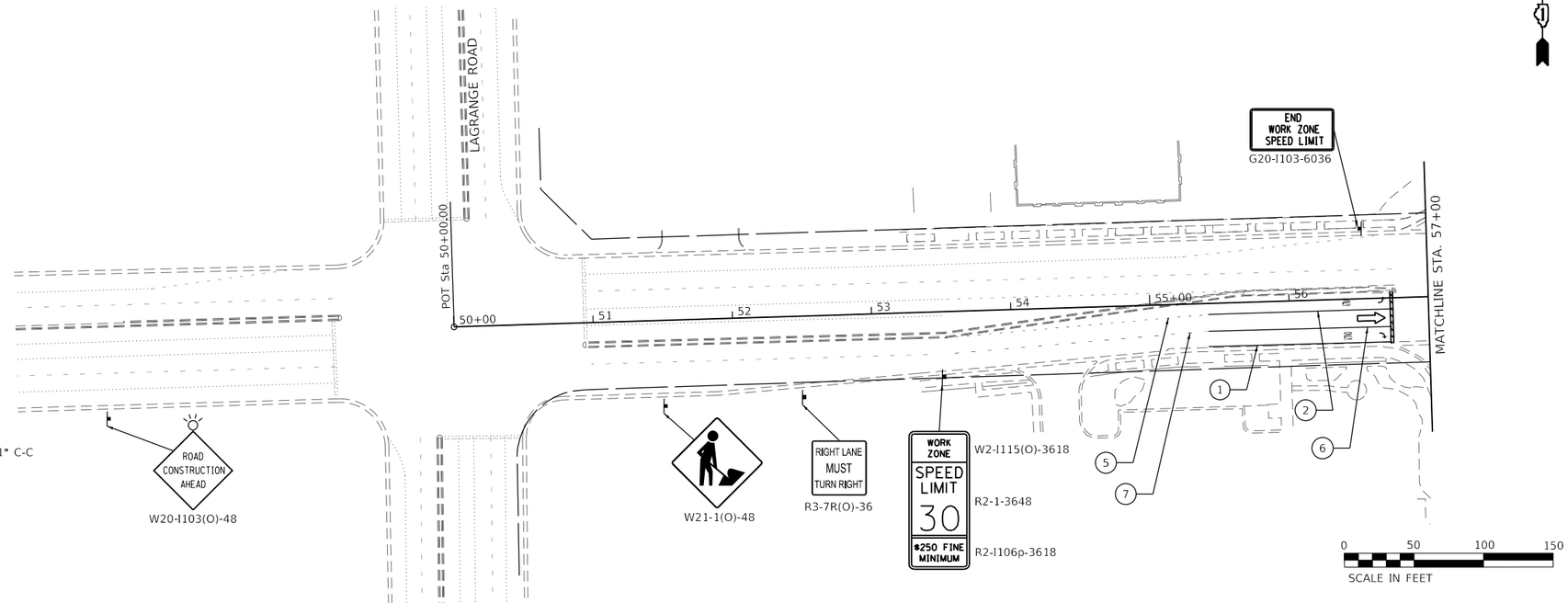

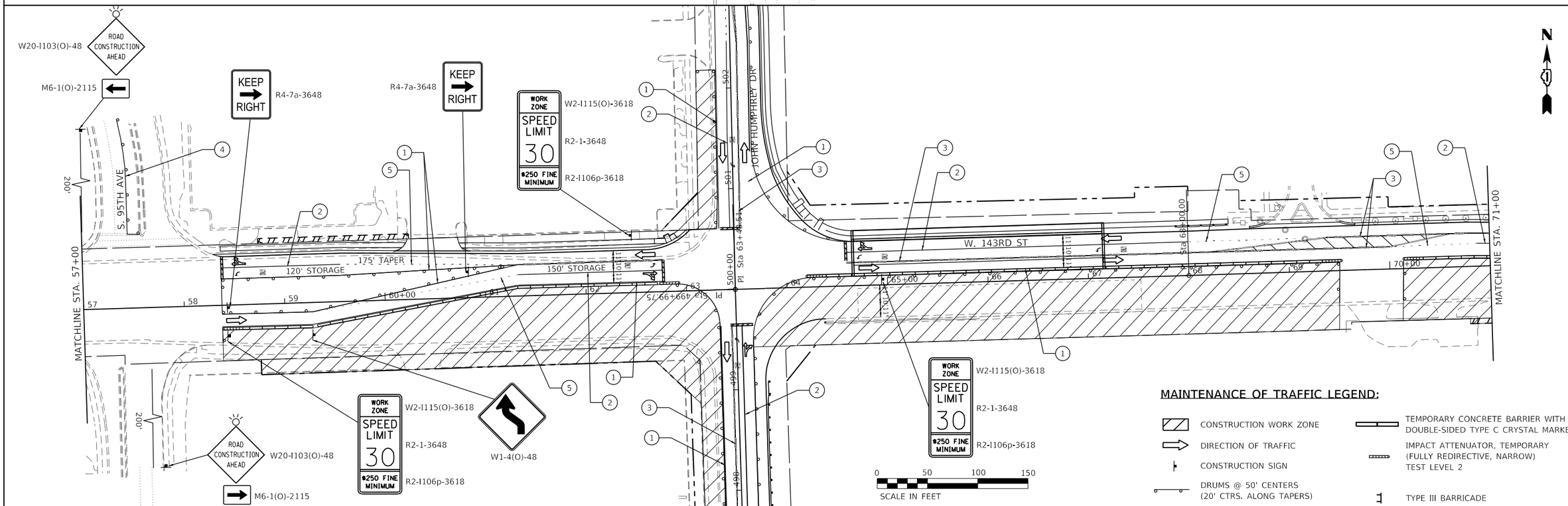

MAINTENANCE OF TRAFFIC LEGEND:

- CONSTRUCTION WORK ZONE
- DIRECTION OF TRAFFIC
- CONSTRUCTION SIGN
- DRUMS @ 50' CENTERS (20' CTRS. ALONG TAPERS)
- TEMPORARY CONCRETE BARRIER WITH DOUBLE-SIDED TYPE C CRYSTAL MARKERS
- IMPACT ATTENUATOR, TEMPORARY (FULLY REDIRECTIVE, NARROW) TEST LEVEL 2
- TYPE III BARRICADE

PATRICK ENGINEERING

USER NAME = dtroyer	DESIGNED -	REVISED -	
	DRAWN -	REVISED -	
PLOT SCALE = 100:0.0000 ':' / in.	CHECKED -	REVISED -	
PLOT DATE = 12/9/2024	DATE - 12/03/24	REVISED -	

STATE OF ILLINOIS
DEPARTMENT OF TRANSPORTATION

SUGGESTED TRAFFIC CONTROL – STAGE 2
W. 143RD STREET

SCALE: | SHEET 5 OF 10 SHEETS | STA. TO STA.

F.A.U. RTE.	SECTION	COUNTY	TOTAL SHEETS	SHEET NO.
2520	16-00078-00-CH	COOK	228	48
		CONTRACT NO. 61K89		
		ILLINOIS	FED. AID PROJECT	

PLOT DRIVER = $PLTDRVLS
PEN TABLE = $PENTBLLS
FILE NAME = pw:\\patrickcco-pw.bentley.com:patrickcco-pw-07\Documents\Orland Park\22277.005\2_Design\12-3_CADD\SHEETS\0160010-143HD-A000-M0T-143 STAGE 2-01.dgn

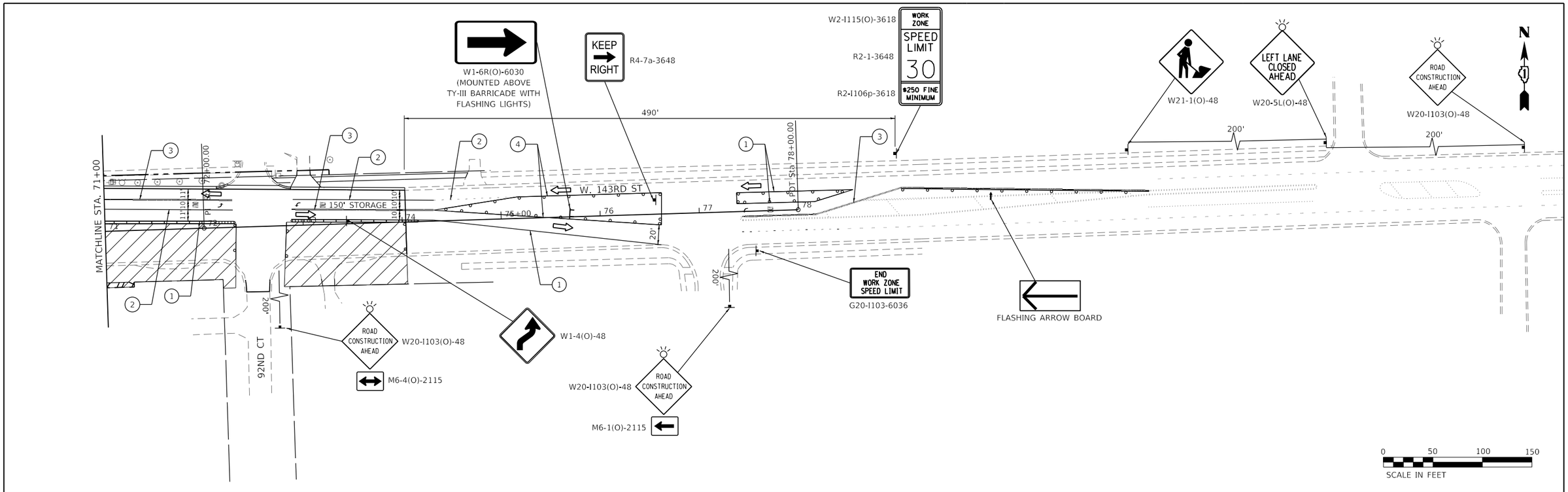

MAINTENANCE OF TRAFFIC LEGEND:

1. TEMPORARY PAVEMENT MARKING - LINE 4" - TYPE IV TAPE, SOLID WHITE
2. TEMPORARY PAVEMENT MARKING - LINE 6" - TYPE IV TAPE, SOLID WHITE
3. TEMPORARY PAVEMENT MARKING - LINE 4" - TYPE IV TAPE, SOLID DOUBLE YELLOW @ 11" C-C
4. TEMPORARY PAVEMENT MARKING - LINE 4" - TYPE IV TAPE, SOLID YELLOW
5. TEMPORARY PAVEMENT MARKING - LINE 4" - TYPE IV TAPE, (6' SKIP - 2' DASH) WHITE
6. TEMPORARY PAVEMENT MARKING - LINE 8" - TYPE IV TAPE, SOLID WHITE

MAINTENANCE OF TRAFFIC LEGEND:

- CONSTRUCTION WORK ZONE
- DIRECTION OF TRAFFIC
- CONSTRUCTION SIGN
- DRUMS @ 50' CENTERS (20' CTRS. ALONG TAPERS)
- TEMPORARY CONCRETE BARRIER WITH DOUBLE-SIDED TYPE C CRYSTAL MARKERS
- IMPACT ATTENUATOR, TEMPORARY (FULLY REDIRECTIVE, NARROW) TEST LEVEL 2
- TYPE III BARRICADE

PLOT DRIVER = $PLTDRV1S
PEN TABLE = $PENTBL1S
FILE NAME = pw:\\patrickco-pw.bentley.com:pcbpw-07\Documents\Orland Park\22277.005\12_Design\12-3_CADD\SHEETS\0160010-143HD-000-HOT-143 STAGE 2-02.dgn

PATRICK ENGINEERING

USER NAME = dtroyer	DESIGNED -	REVISED -	
	DRAWN -	REVISED -	
PLOT SCALE = 100:0.0000 ':' / in.	CHECKED -	REVISED -	
PLOT DATE = 12/9/2024	DATE - 12/03/24	REVISED -	

STATE OF ILLINOIS
DEPARTMENT OF TRANSPORTATION

SUGGESTED TRAFFIC CONTROL - STAGE 2
W. 143RD STREET

SCALE: | SHEET 6 OF 10 SHEETS | STA. TO STA.

F.A.U. RTE.	SECTION	COUNTY	TOTAL SHEETS	SHEET NO.
2520	16-00078-00-CH	COOK	228	49

CONTRACT NO. 61K89

ILLINOIS | FED. AID PROJECT

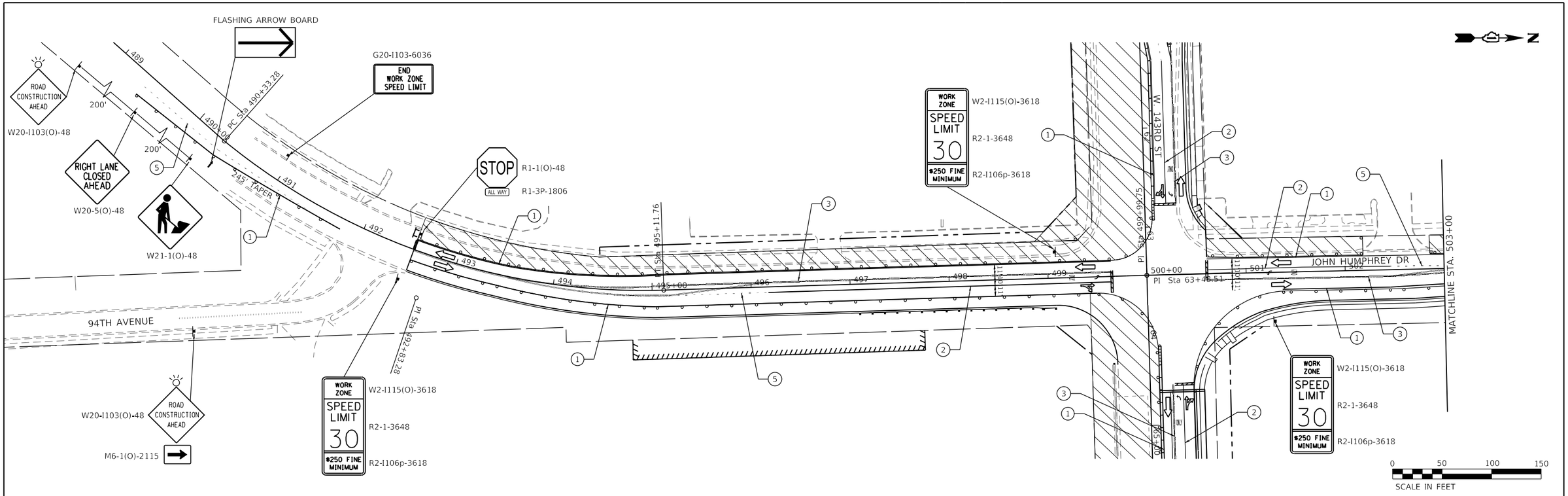

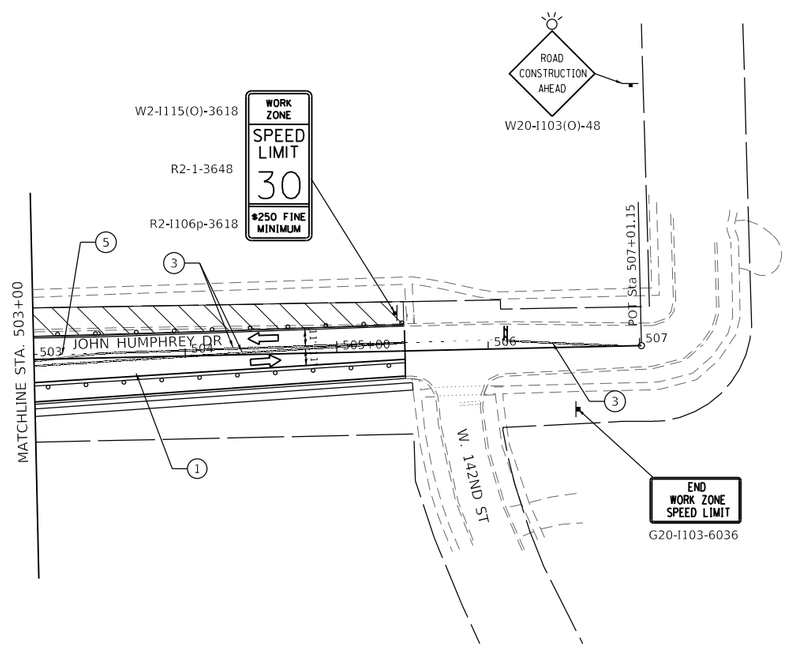

0 50 100 150
SCALE IN FEET

MAINTENANCE OF TRAFFIC LEGEND:

- CONSTRUCTION WORK ZONE
- DIRECTION OF TRAFFIC
- CONSTRUCTION SIGN
- DRUMS @ 50' CENTERS (20' CTRS. ALONG TAPERS)
- TEMPORARY CONCRETE BARRIER WITH DOUBLE-SIDED TYPE C CRYSTAL MARKERS
- IMPACT ATTENUATOR, TEMPORARY (FULLY REDIRECTIVE, NARROW) TEST LEVEL 2
- TYPE III BARRICADE

1. TEMPORARY PAVEMENT MARKING - LINE 4" - TYPE IV TAPE, SOLID WHITE
2. TEMPORARY PAVEMENT MARKING - LINE 6" - TYPE IV TAPE, SOLID WHITE
3. TEMPORARY PAVEMENT MARKING - LINE 4" - TYPE IV TAPE, SOLID DOUBLE YELLOW @ 11" C-C
4. TEMPORARY PAVEMENT MARKING - LINE 4" - TYPE IV TAPE, SOLID YELLOW
5. TEMPORARY PAVEMENT MARKING - LINE 4" - TYPE IV TAPE, (6' DASH - 2' SKIP) WHITE
6. TEMPORARY PAVEMENT MARKING - LINE 8" - TYPE IV TAPE, SOLID WHITE

PLOT DRIVER = $PLTDRVLS
PEN TABLE = $PENTBLLS
FILE NAME = pw://patrickco-pw.bentley.com:patrickco-pw-07/Documents/Orland Park\22277.005\12.3_CADD\SHEETS\0160010-143HD\000-MOT-JHD STAGE 2.dgn

PATRICK ENGINEERING

USER NAME = dtroyer	DESIGNED -	REVISED -	
	DRAWN -	REVISED -	
PLOT SCALE = 100:0.0000 ':' / in.	CHECKED -	REVISED -	
PLOT DATE = 12/9/2024	DATE - 12/03/24	REVISED -	

STATE OF ILLINOIS
DEPARTMENT OF TRANSPORTATION

SUGGESTED TRAFFIC CONTROL – STAGE 2
JOHN HUMPHREY DRIVE

SHEET 7 OF 10 SHEETS STA. TO STA.

F.A.U. RTE.	SECTION	COUNTY	TOTAL SHEETS	SHEET NO.
2520	16-00078-00-CH	COOK	228	50
		CONTRACT NO. 61K89		
		ILLINOIS	FED. AID PROJECT	

MAINTENANCE OF TRAFFIC LEGEND:

1. TEMPORARY PAVEMENT MARKING - LINE 4" - TYPE IV TAPE, SOLID WHITE
2. TEMPORARY PAVEMENT MARKING - LINE 6" - TYPE IV TAPE, SOLID WHITE
3. TEMPORARY PAVEMENT MARKING - LINE 4" - TYPE IV TAPE, SOLID DOUBLE YELLOW @ 11" C-C
4. TEMPORARY PAVEMENT MARKING - LINE 4" - TYPE IV TAPE, SOLID YELLOW
5. TEMPORARY PAVEMENT MARKING - LINE 4" - TYPE IV TAPE, (6' SKIP - 2' DASH) WHITE
6. TEMPORARY PAVEMENT MARKING - LINE 8" - TYPE IV TAPE, SOLID WHITE

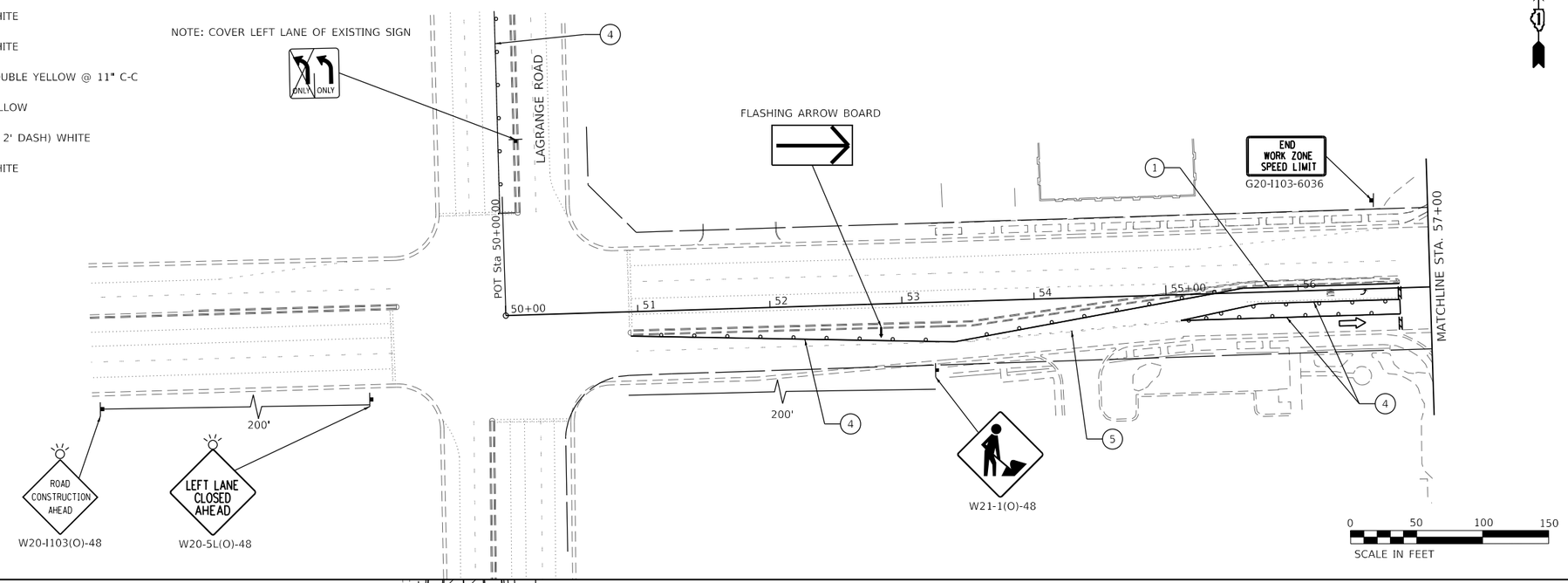

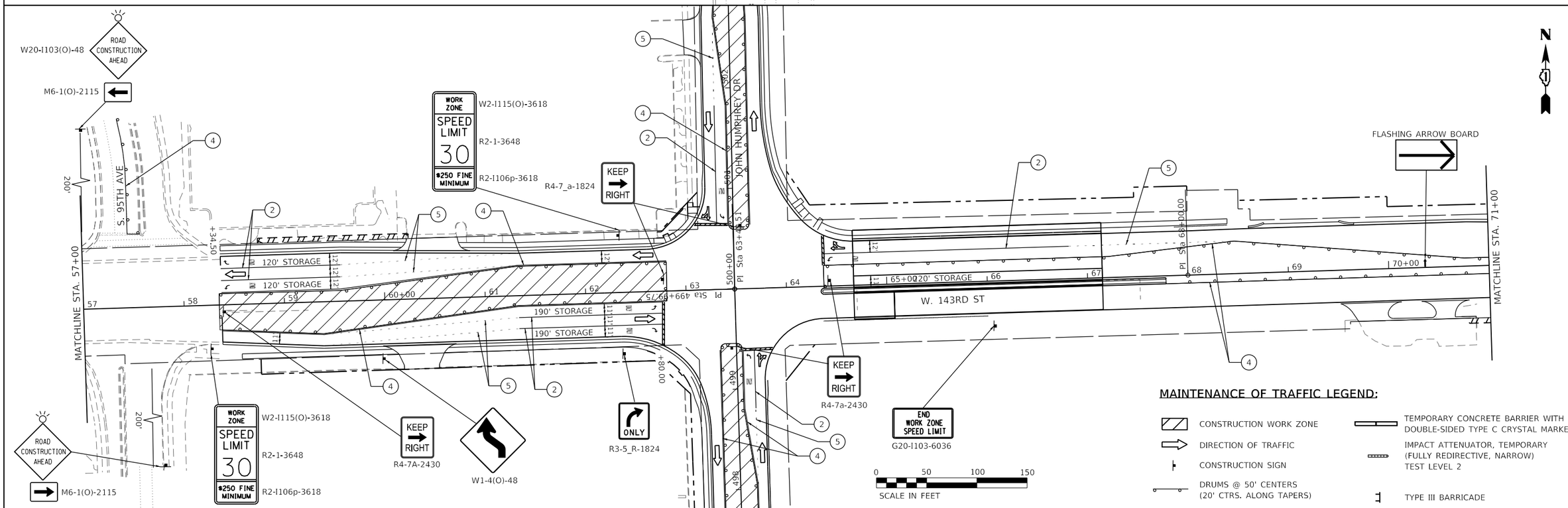

MAINTENANCE OF TRAFFIC LEGEND:

- CONSTRUCTION WORK ZONE
- DIRECTION OF TRAFFIC
- CONSTRUCTION SIGN
- DRUMS @ 50' CENTERS (20' CTRS. ALONG TAPERS)
- TEMPORARY CONCRETE BARRIER WITH DOUBLE-SIDED TYPE C CRYSTAL MARKERS
- IMPACT ATTENUATOR, TEMPORARY (FULLY REDIRECTIVE, NARROW) TEST LEVEL 2
- TYPE III BARRICADE

PLOT DRIVER = $PLTDRVLS
PEN TABLE = $PENTBLLS
FILE NAME = pw:\\patrickcco-pw.bentley.com:patrickcco-pw-07\Documents\Orland Park\22277.005\2_Design\2-3_CADD\SHEETS\0160010-143HD-A000-MOT-143 STAGE 3-01.dgn

PATRICK ENGINEERING

USER NAME = dtroyer	DESIGNED -	REVISED -	
	DRAWN -	REVISED -	
PLOT SCALE = 100:0.0000 ':' / in.	CHECKED -	REVISED -	
PLOT DATE = 12/9/2024	DATE - 12/03/24	REVISED -	

STATE OF ILLINOIS
DEPARTMENT OF TRANSPORTATION

SUGGESTED TRAFFIC CONTROL – STAGE 3
W. 143RD STREET

SCALE: | SHEET 8 OF 10 SHEETS | STA. TO STA.

F.A.U. RTE.	SECTION	COUNTY	TOTAL SHEETS	SHEET NO.
2520	16-00078-00-CH	COOK	228	51
		CONTRACT NO. 61K89		
		ILLINOIS	FED. AID PROJECT	

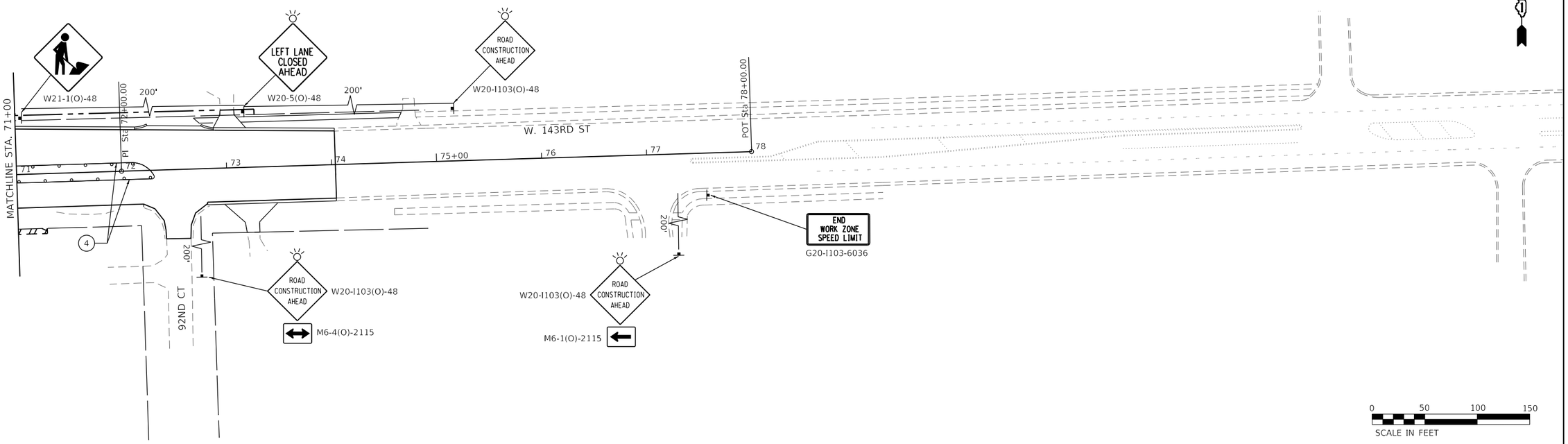

MAINTENANCE OF TRAFFIC LEGEND:

1. TEMPORARY PAVEMENT MARKING - LINE 4" - TYPE IV TAPE, SOLID WHITE
2. TEMPORARY PAVEMENT MARKING - LINE 6" - TYPE IV TAPE, SOLID WHITE
3. TEMPORARY PAVEMENT MARKING - LINE 4" - TYPE IV TAPE, SOLID DOUBLE YELLOW @ 11" C-C
4. TEMPORARY PAVEMENT MARKING - LINE 4" - TYPE IV TAPE, SOLID YELLOW
5. TEMPORARY PAVEMENT MARKING - LINE 4" - TYPE IV TAPE, (6' SKIP - 2' DASH) WHITE
6. TEMPORARY PAVEMENT MARKING - LINE 8" - TYPE IV TAPE, SOLID WHITE

MAINTENANCE OF TRAFFIC LEGEND:

- CONSTRUCTION WORK ZONE
- DIRECTION OF TRAFFIC
- CONSTRUCTION SIGN
- DRUMS @ 50' CENTERS (20' CTRS. ALONG TAPERS)
- TEMPORARY CONCRETE BARRIER WITH DOUBLE-SIDED TYPE C CRYSTAL MARKERS
- IMPACT ATTENUATOR, TEMPORARY (FULLY REDIRECTIVE, NARROW) TEST LEVEL 2
- TYPE III BARRICADE

PLOT DRIVER = $PLTDRV1S
PEN TABLE = $PENTBL1S
FILE NAME = pw:\\patrickco-pw.bentley.com:pw01\Documents\Orland Park\22277.005\12_Design\12-3_CADD\SHEETS\16001b-143HD-000-HOT-143 STAGE 3-02.dgn

PATRICK ENGINEERING

USER NAME = dtroyer	DESIGNED -	REVISED -	
	DRAWN -	REVISED -	
PLOT SCALE = 100:0.0000 ':' / in.	CHECKED -	REVISED -	
PLOT DATE = 12/9/2024	DATE - 12/03/24	REVISED -	

STATE OF ILLINOIS
DEPARTMENT OF TRANSPORTATION

SUGGESTED TRAFFIC CONTROL - STAGE 3
W. 143RD STREET

SCALE: | SHEET 9 OF 10 SHEETS | STA. TO STA.

F.A.U. RTE.	SECTION	COUNTY	TOTAL SHEETS	SHEET NO.
2520	16-00078-00-CH	COOK	228	52
		CONTRACT NO. 61K89		
	ILLINOIS	FED. AID PROJECT		

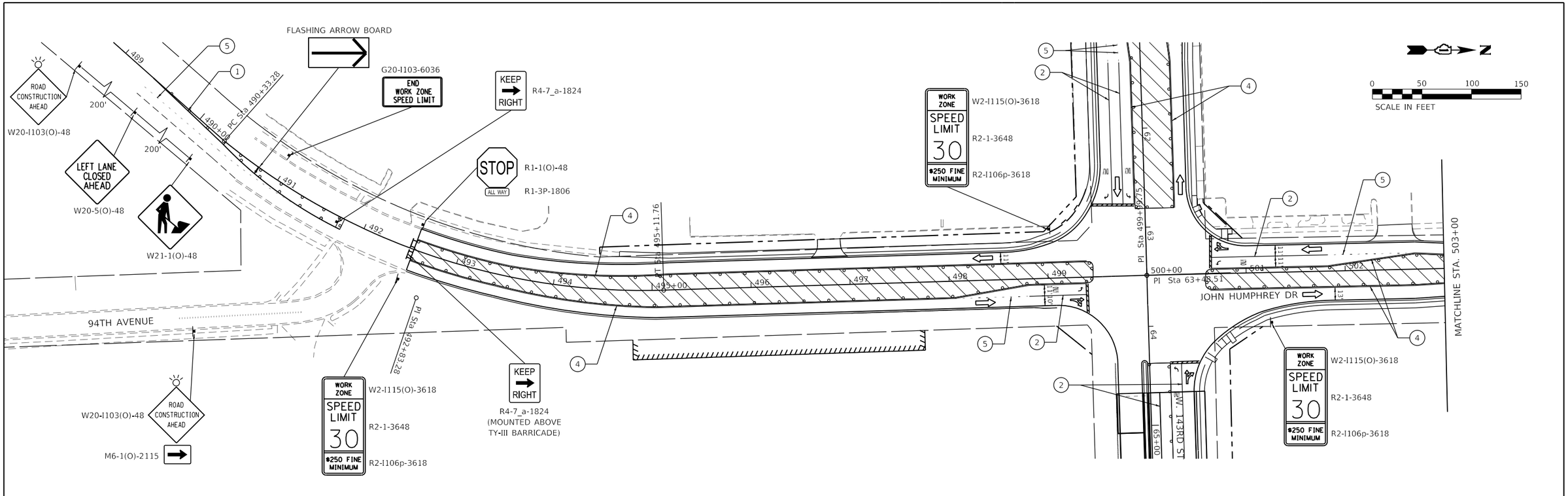

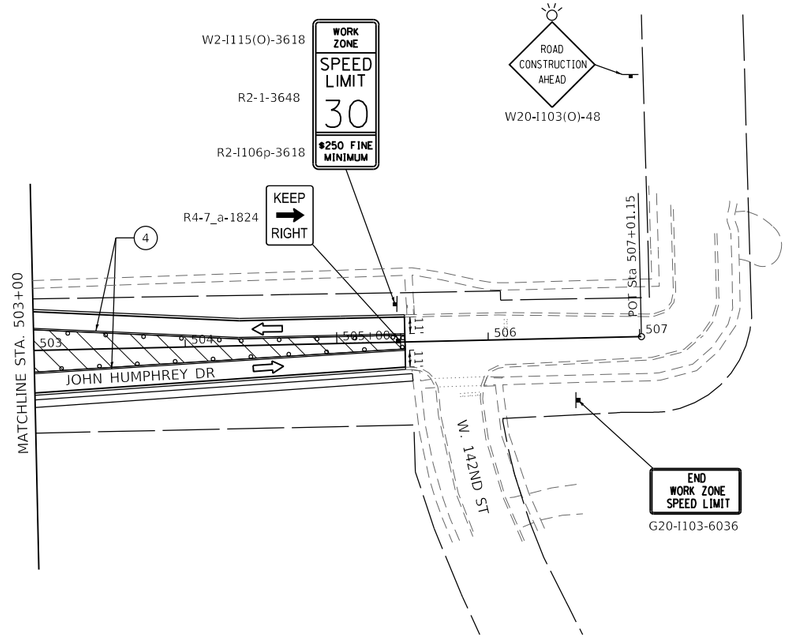

MAINTENANCE OF TRAFFIC LEGEND:

- CONSTRUCTION WORK ZONE
- DIRECTION OF TRAFFIC
- CONSTRUCTION SIGN
- DRUMS @ 50' CENTERS (20' CTRS. ALONG TAPERS)
- TEMPORARY CONCRETE BARRIER WITH DOUBLE-SIDED TYPE C CRYSTAL MARKERS
- IMPACT ATTENUATOR, TEMPORARY (FULLY REDIRECTIVE, NARROW) TEST LEVEL 2
- TYPE III BARRICADE

1. TEMPORARY PAVEMENT MARKING - LINE 4" - TYPE IV TAPE, SOLID WHITE
2. TEMPORARY PAVEMENT MARKING - LINE 6" - TYPE IV TAPE, SOLID WHITE
3. TEMPORARY PAVEMENT MARKING - LINE 4" - TYPE IV TAPE, SOLID DOUBLE YELLOW @ 11" C-C
4. TEMPORARY PAVEMENT MARKING - LINE 4" - TYPE IV TAPE, SOLID YELLOW
5. TEMPORARY PAVEMENT MARKING - LINE 4" - TYPE IV TAPE, (6' SKIP - 2' DASH) WHITE
6. TEMPORARY PAVEMENT MARKING - LINE 8" - TYPE IV TAPE, SOLID WHITE

PLOT DRIVER = $PLTDRVLS
PEN TABLE = $PENTBLLS
FILE NAME = pw://patrickco-pw.bentley.com:patrickco-pw-07/Documents/Orland Park\22277.005\12_Design\12.3_CADD\SHEETS\0160010-143HD\000-MOT-JHD STAGE 3.dgn

PATRICK ENGINEERING

USER NAME = dtroyer	DESIGNED -	REVISED -	
	DRAWN -	REVISED -	
PLOT SCALE = 100:0.0000 ':' / in.	CHECKED -	REVISED -	
PLOT DATE = 12/9/2024	DATE - 12/03/24	REVISED -	

STATE OF ILLINOIS
DEPARTMENT OF TRANSPORTATION

SUGGESTED TRAFFIC CONTROL – STAGE 3
JOHN HUMPHREY DRIVE

SHEET 10 OF 10 SHEETS STA. TO STA.

F.A.U. RTE.	SECTION	COUNTY	TOTAL SHEETS	SHEET NO.
2520	16-00078-00-CH	COOK	228	53

CONTRACT NO. 61K89

ILLINOIS FED. AID PROJECT

SEDIMENTATION AND EROSION CONTROL NOTES

1. MAINTAINING DRAINAGE; IT SHALL BE THE CONTRACTOR'S RESPONSIBILITY TO MAINTAIN DRAINAGE FLOWS AT ALL TIMES DURING THE PERFORMANCE OF THE WORK. METHODS USED BY THE CONTRACTOR SHALL BE SUBJECT TO APPROVAL OF THE ENGINEER.

2. LENGTHS AND SIZES OF EXISTING STORM SEWERS AS SHOWN ON THE PLANS SHALL BE VERIFIED IN THE FIELD PRIOR TO INSTALLATION OF PROPOSED DRAINAGE ITEMS. THE INVERTS OF PROPOSED DRAINAGE ITEMS CONNECTING TO EXISTING SEWERS OR STRUCTURES MAY REQUIRE REVISIONS TO MEET EXISTING FIELD CONDITIONS. ANY ADJUSTMENTS SHALL BE AS DIRECTED BY THE ENGINEER.

3. EXISTING DRAINAGE STRUCTURES TO BE LEFT IN PLACE SHALL BE PROTECTED DURING CONSTRUCTION. IF IN THE OPINION OF THE ENGINEER, THE DRAINAGE STRUCTURES ARE DAMAGED DUE TO THE CONTRACTOR'S OPERATION, THEY SHALL BE REPLACED IN KIND AT NO ADDITIONAL COST.

4. DURING CONSTRUCTION OPERATIONS, IF ANY LOOSE MATERIAL IS DEPOSITED IN THE FLOW LINE OF THE GUTTER OR DRAINAGE STRUCTURES, DITCHES, ETC. SO THAT THE NATURAL FLOW OF WATER IS OBSTRUCTED, THE LOOSE MATERIAL SHALL BE REMOVED AT THE CLOSE OF EACH WORK DAY. AT THE CONCLUSION OF THE CONSTRUCTION OPERATIONS, ALL DRAINAGE STRUCTURES AND FLOW LINES ARE TO BE FREE FROM DIRT AND DEBRIS. THE CONTRACTORS FAILURE TO PROVIDE THE ABOVE WILL PRECLUDE ANY POSSIBLE ADDED COMPENSATION REQUESTED DUE TO DELAYS OR UNSUITABLE MATERIAL CREATED AS A RESULT THEREOF.

5. ALL EXISTING FIELD DRAINAGE TILE AND OFF-SITE STORM SEWER ENCOUNTERED OR DAMAGED DURING CONSTRUCTION ARE TO BE RESTORED TO THEIR ORIGINAL CONDITIONS. PROPERLY REROUTED AND /OR CONNECTED TO THE STORM SEWER SYSTEM OR PROPOSED DITCHES UNLESS OTHERWISE SPECIFIED.

6. THE CONTRACTOR SHALL VERIFY WHEN FLAT SLAB TOPS ARE REQUIRED ON MANHOLES AND CATCH BASINS. NO ADDITIONAL COMPENSATION SHALL BE PROVIDED FOR THE USE OF FLAT SLAB TOPS, UNLESS NOTED OTHERWISE ON PLANS.

7. THE LOCATION OF EXISTING DRAINAGE STRUCTURES, STORM SEWERS, WATER MAINS, SANITARY SEWERS, AND ANY OTHER PUBLIC OR PRIVATE UTILITIES AS SHOWN ON THE PLANS IS APPROXIMATE, AND THEIR EXACT LOCATION IS TO BE DETERMINED IN THE FIELD BY THE CONTRACTOR.

8. ALL DRAINAGE STRUCTURES, MANHOLES, AND CATCH BASINS SHALL HAVE A 2-FOOT DEEP SUMP (MINIMUM) BETWEEN THE BOTTOM OF THE LOWEST STORM SEWER INVERT AND THE BOTTOM OF THE DRAINAGE STRUCTURE OR CATCH BASIN.

9. THE INFORMATION PROVIDED IS ESTIMATED BASED UPON EXISTING SURVEY AND WILL REQUIRE ADJUSTMENT BY THE CONTRACTOR AS NECESSARY TO FULFILL THE INTENT OF THE DRAINAGE PLANS.

10. THE CONTRACTOR SHALL VERIFY EXISTING DRAINAGE STRUCTURE DATA IN FIELD PRIOR TO INSTALLATION OF DRAINAGE ITEMS. GRADES, ELEVATIONS, SIZES, AND LENGTHS OF EXISTING STORM SEWER WERE DETERMINED FROM AVAILABLE RECORD DRAWINGS AND FIELD SURVEY. THE INVERTS OF THE PROPOSED DRAINAGE STRUCTURES MAY REQUIRE REVISIONS TO MEET EXISTING FIELD CONDITIONS. ANY ADJUSTMENTS SHALL BE AS DIRECTED BY THE ENGINEER. THE COST OF THIS WORK IS TO BE INCLUDED IN THE UNIT PRICES OF THE ITEMS TO BE INSTALLED OR REPAIRED AND NO ADDITIONAL COMPENSATION WILL BE ALLOWED.

11. DRAINAGE STRUCTURE ELEVATIONS: RIM ELEVATIONS GIVEN ON THE PLANS ARE ONLY TO ASSIST THE CONTRACTOR IN DETERMINING THE APPROXIMATE OVERALL HEIGHT OF THE STRUCTURE. FRAMES OF ALL NEW, ADJUSTED OR RECONSTRUCTED STRUCTURES, WILL BE ADJUSTED TO THE FINAL ELEVATION OF THE AREA IN WHICH THEY ARE LOCATED AS PART OF THE STRUCTURE COST. DRAINAGE STRUCTURE GRADES SHALL BE VERIFIED IN THE FIELD PRIOR TO FABRICATION AND INSTALLATION OF DRAINAGE ITEMS. GRADES OR SEWER LINES WERE DETERMINED FROM AVAILABLE PLANS AND SURVEY. THE INVERTS OF THE PROPOSED SEWERS CONNECTING TO EXISTING DRAINAGE STRUCTURES MAY REQUIRE REVISIONS TO MEET EXISTING FIELD CONDITIONS. ANY ADJUSTMENTS SHALL BE AS DIRECTED BY THE ENGINEER.

12. EXCAVATION, BACKFILL, DISPOSING OF SURPLUS MATERIAL AND RESTORATION SHALL BE INCLUDED IN THE AWARDED BID PRICE OF STORM SEWERS, HEADWALLS AND DRAINAGE STRUCTURES. RESTORATION IS DEFINED AS REQUIRED TOPSOIL, SEEDING AND EROSION CONTROL BLANKET AS APPROVED BY THE ENGINEER.

13. THE TOP SURFACE, RIM, OF ALL DRAINAGE STRUCTURES SHALL BE BROUGHT TO FLUSH WITH EXISTING GROUND.

SEDIMENTATION AND EROSION CONTROL NOTES (CONT.)

14. THE CONDITION OF THE CONSTRUCTION SITE FOR WINTER SHALL BE ADDRESSED EARLY IN THE FALL GROWING SEASON SO THAT SLOPES AND OTHER BARE EARTH AREAS MAY BE STABILIZED WITH TEMPORARY AND/OR PERMANENT VEGETATIVE COVER FOR PROPER EROSION AND SEDIMENT CONTROL. ALL OPEN AREAS THAT ARE TO REMAIN IDLE THROUGHOUT THE WINTER SHALL RECEIVE TEMPORARY EROSION CONTROL MEASURES INCLUDING TEMPORARY SEEDING, MULCHING AND/OR EROSION CONTROL BLANKET PRIOR TO THE END OF THE FALL GROWING SEASON. THE AREAS TO BE WORKED BEYOND THE END OF THE GROWING SEASON MUST INCORPORATE SOIL STABILIZATION MEASURES THAT DO NOT RELY ON VEGETATIVE COVER SUCH AS EROSION CONTROL BLANKET AND HEAVY MULCHING.

15. CONTRACTOR TO PROVIDE RESIDENT ENGINEER A STABILIZED FLOW LINE PLAN TO BE USED DURING STORM SEWER CONSTRUCTION. LACK OF APPROVED PLAN OR FAILURE TO COMPLY WILL RESULT IN AS ESC DEFICIENCY DEDUCTION.

16. ANY LOOSE MATERIAL DEPOSITED IN THE FLOW LINE OF DRAINAGE STRUCTURES, WHICH OBSTRUCTS THE NATURAL FLOW OF WATER, SHALL BE REMOVED AT THE CLOSE OF EACH WORKING DAY. PRIOR TO ACCEPTANCE OF THE IMPROVEMENT, ALL DRAINAGE STRUCTURES SHALL BE FREE OF DIRT AND DEBRIS. THIS WORK WILL NOT BE PAID FOR SEPARATELY BUT SHALL BE CONSIDERED INCLUDED IN THE COST OF SEDIMENT CONTROL, DRAINAGE STRUCTURE INLET FILTER CLEANING

17. THIS PROJECT REQUIRES A US ARMY CORP OF ENGINEERS (USACOE) 404 PERMIT THAT WILL BE SECURED BY THE DEPARTMENT. ALL CONDITIONS OF THE 404 PERMIT, FOUND IN THE SPECIAL PROVISIONS, MUST BE FOLLOWED. AS A CONDITION OF THIS PERMIT, THE CONTRACTOR WILL NEED TO SUBMIT A WORK PLAN FOR WORK WITHIN WETLANDS AND WOUS TO KDSWCD FOR APPROVAL. GUIDELINES ON ACCEPTABLE WORK TECHNIQUES FOR WORK IN WETLANDS AND WOUS CAN BE FOUND ON USACE WEBSITE. THE USACE DEFINES AND DETERMINES THE WORK. THE COST OF ALL MATERIALS AND LABOR NECESSARY TO COMPLY WITH THE ABOVE PROVISIONS TO PREPARE AND IMPLEMENT A WORK PLAN FOR WORK IN WETLANDS AND WOUS WILL NOT BE PAID FOR SEPARATELY, BUT SHALL BE CONSIDERED AS INCLUDED IN THE UNIT BID PRICES OF THE CONTRACT AND NO ADDITIONAL COMPENSATION WILL BE ALLOWED.

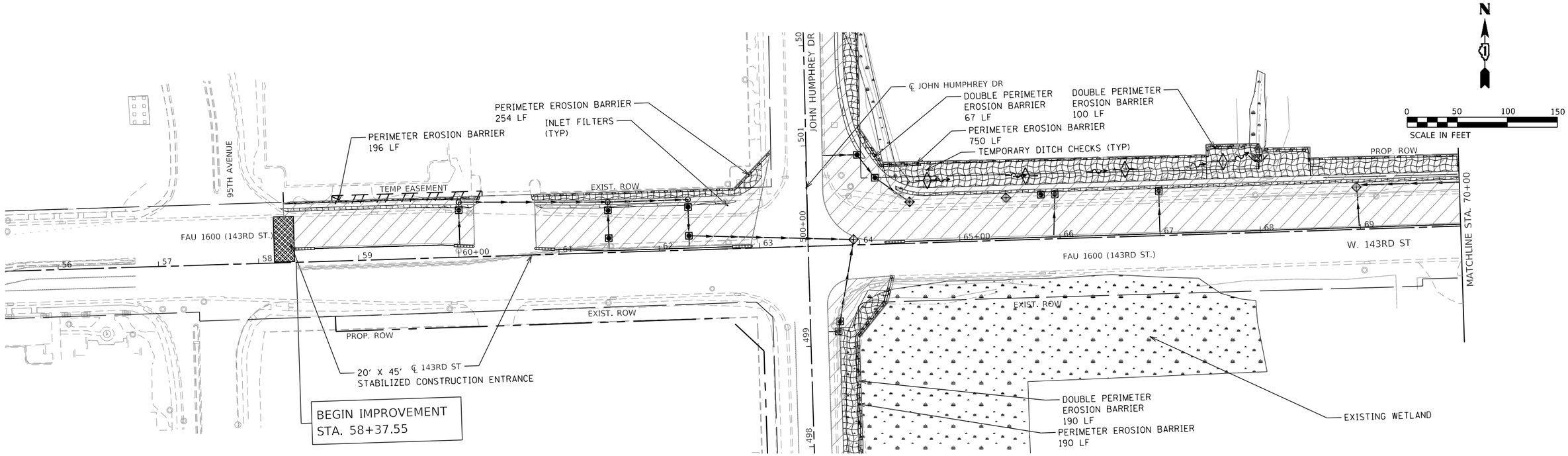

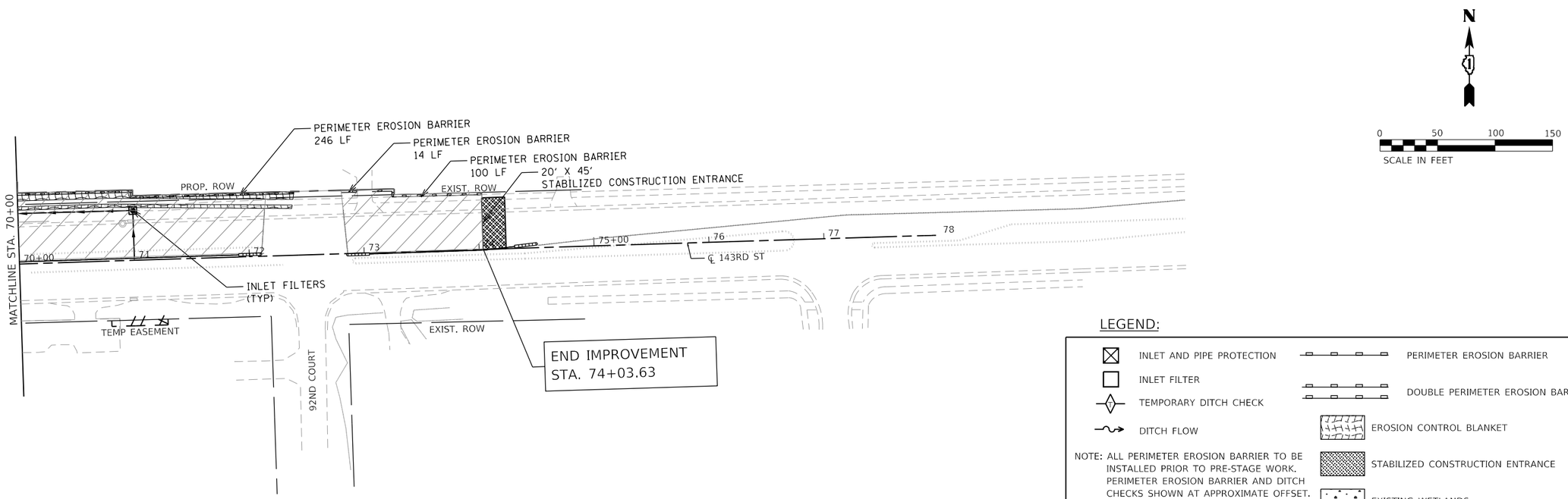

LEGEND:

- INLET AND PIPE PROTECTION
- INLET FILTER
- TEMPORARY DITCH CHECK
- DITCH FLOW
- PERIMETER EROSION BARRIER
- DOUBLE PERIMETER EROSION BARRIER
- EROSION CONTROL BLANKET
- STABILIZED CONSTRUCTION ENTRANCE
- EXISTING WETLANDS

NOTE: ALL PERIMETER EROSION BARRIER TO BE INSTALLED PRIOR TO PRE-STAGE WORK. PERIMETER EROSION BARRIER AND DITCH CHECKS SHOWN AT APPROXIMATE OFFSET.

CHRISTOPHER B. BURKE ENGINEERING, LTD.
9575 W. Higgins Road, Suite 600
Rosemont, Illinois 60018
(847) 823-0500

USER NAME = dtroyer	DESIGNED -	REVISED -	
	DRAWN -	REVISED -	
PLOT SCALE = 100:0.0000 ':" / in.	CHECKED -	REVISED -	
PLOT DATE = 12/3/2024	DATE - 12/03/24	REVISED -	

STATE OF ILLINOIS
DEPARTMENT OF TRANSPORTATION

SUGGESTED EROSION CONTROL - STAGE 1
W. 143RD STREET

SCALE: 1" = 50' | SHEET OF SHEETS | STA. BEGIN TO STA. 75+00

F.A.U RTE.	SECTION	COUNTY	TOTAL SHEETS	SHEET NO.
2520	16-00078-00-CH	COOK	228	55

CONTRACT NO. 61K89

ILLINOIS | FED. AID PROJECT

PLOT DRIVER = $PLTDRV$LS
PEN TABLE = $PENTBL$LS
FILE NAME = pw:\\patricksco-pw.bentley.com:patricksco-pw-07\Documents\Orland Park\22277.005\12_Design\12-3_CADD\SHEETS\1143HD-Erosion-sht-01.dgn

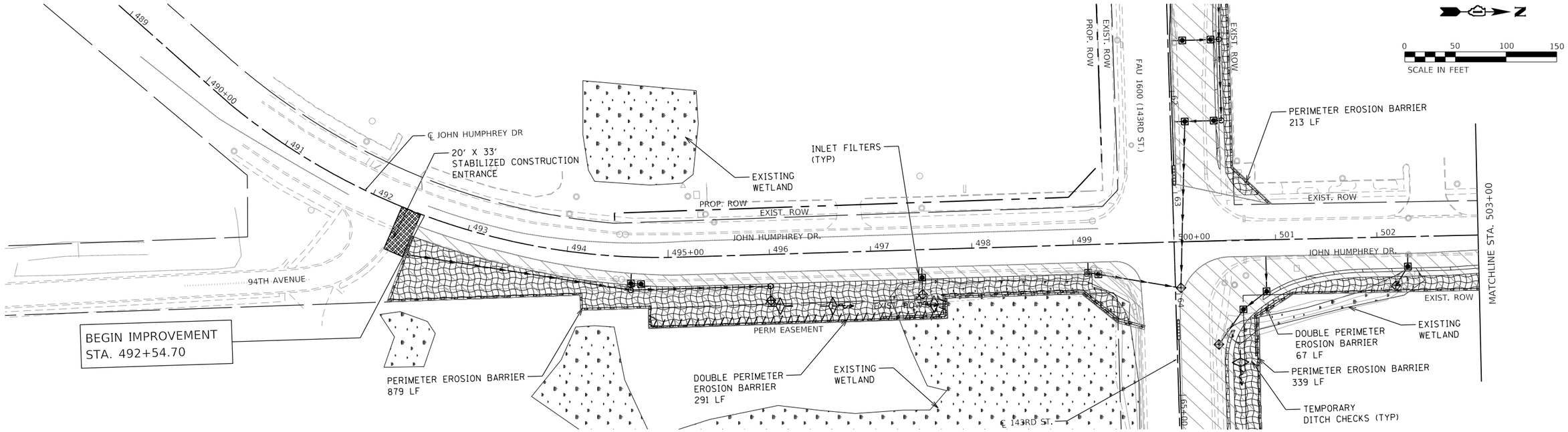

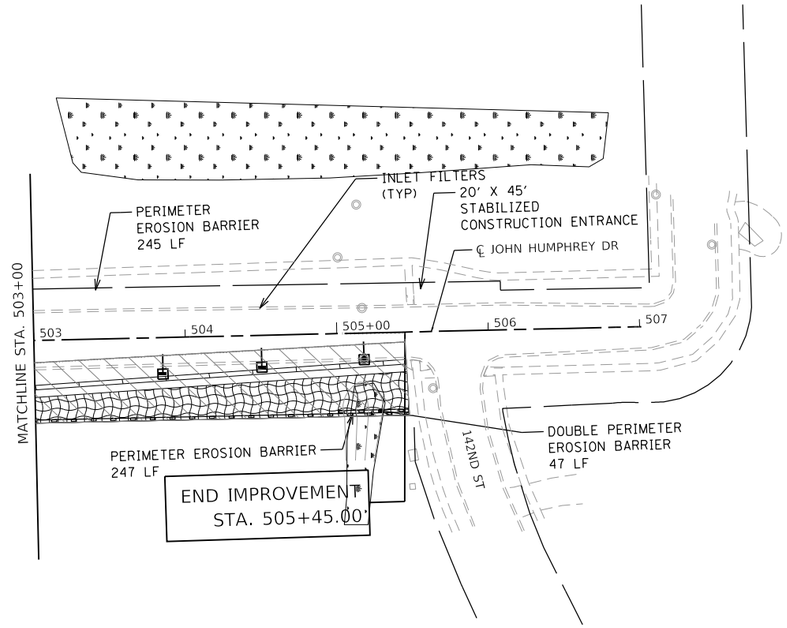

LEGEND:

- INLET AND PIPE PROTECTION
- INLET FILTER
- TEMPORARY DITCH CHECK
- DITCH FLOW
- PERIMETER EROSION BARRIER
- DOUBLE PERIMETER EROSION BARRIER
- EROSION CONTROL BLANKET
- STABILIZED CONSTRUCTION ENTRANCE
- EXISTING WETLANDS

NOTE: ALL PERIMETER EROSION BARRIER TO BE INSTALLED PRIOR TO PRE-STAGE WORK. PERIMETER EROSION BARRIER AND DITCH CHECKS SHOWN AT APPROXIMATE OFFSET.

PLOT DRIVER = $PLTDRV1$
PEN TABLE = $PENTBL1.S
FILE NAME = pw:\\patrickco-pw.bentley.com:patrickco-pw-01\Documents\Orland Park\22277.005\12_Design\12-3_CADD\SHEETS\143HD-Erosion-sht-02.dgn

CHRISTOPHER B. BURKE ENGINEERING, LTD.
9575 W. Higgins Road, Suite 600
Rosemont, Illinois 60018
(847) 823-0500

USER NAME = dtroyer	DESIGNED -	REVISED -	
	DRAWN -	REVISED -	
PLOT SCALE = 100:0.0000 ':" / in.	CHECKED -	REVISED -	
PLOT DATE = 12/3/2024	DATE - 12/03/24	REVISED -	

STATE OF ILLINOIS
DEPARTMENT OF TRANSPORTATION

SUGGESTED EROSION CONTROL – STAGE 1
JOHN HUMPHREY DRIVE

SCALE: 1" = 50' | SHEET OF SHEETS | STA. 492+00 TO STA. 506+00

F.A.U RTE.	SECTION	COUNTY	TOTAL SHEETS	SHEET NO.
2520	16-00078-00-CH	COOK	228	56
		CONTRACT NO. 61K89		
		ILLINOIS	FED. AID PROJECT	

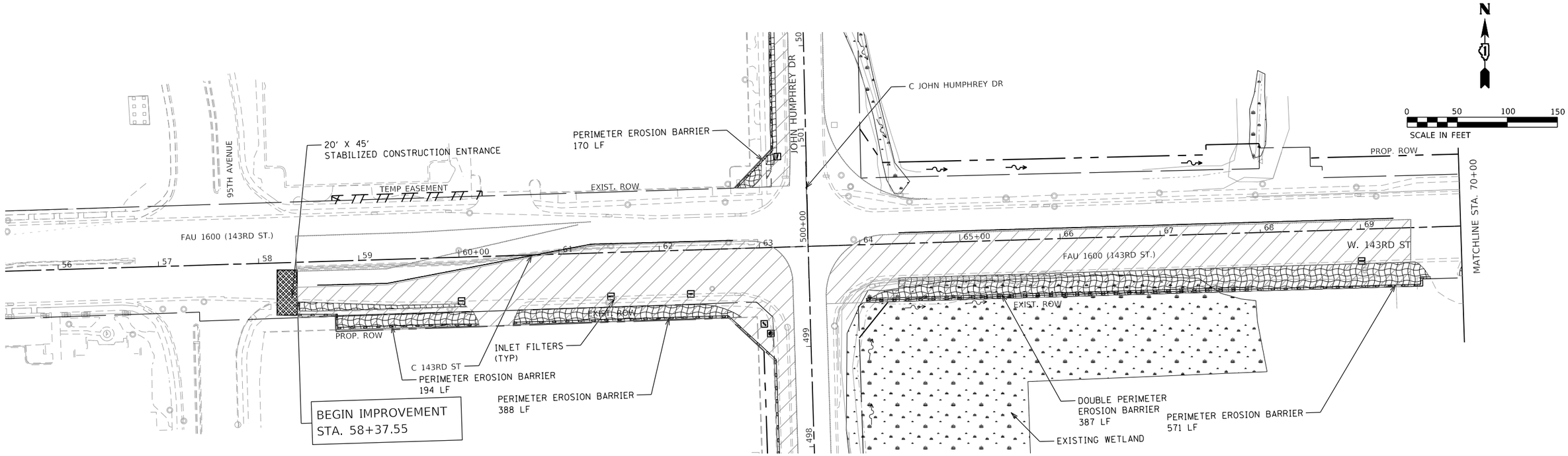

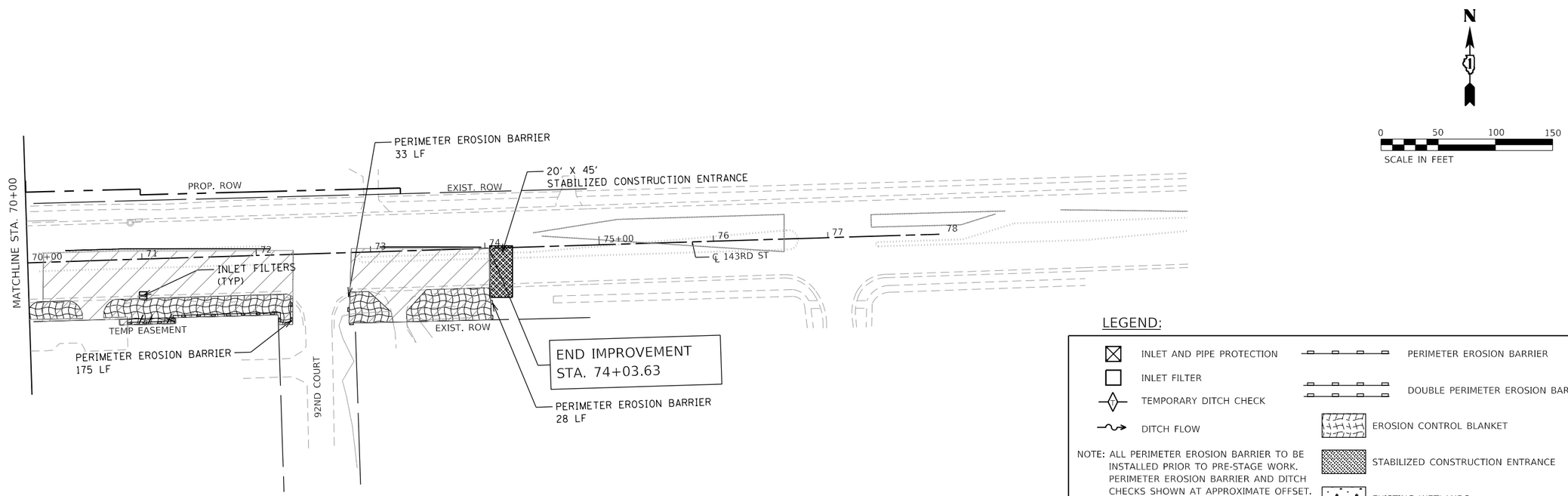

LEGEND:

- INLET AND PIPE PROTECTION
- INLET FILTER
- TEMPORARY DITCH CHECK
- DITCH FLOW
- PERIMETER EROSION BARRIER
- DOUBLE PERIMETER EROSION BARRIER
- EROSION CONTROL BLANKET
- STABILIZED CONSTRUCTION ENTRANCE
- EXISTING WETLANDS

NOTE: ALL PERIMETER EROSION BARRIER TO BE INSTALLED PRIOR TO PRE-STAGE WORK. PERIMETER EROSION BARRIER AND DITCH CHECKS SHOWN AT APPROXIMATE OFFSET.

CHRISTOPHER B. BURKE ENGINEERING, LTD.
9575 W. Higgins Road, Suite 600
Rosemont, Illinois 60018
(847) 823-0500

USER NAME = dtroyer	DESIGNED -	REVISED -	
	DRAWN -	REVISED -	
PLOT SCALE = 100:0.0000 ':' / in.	CHECKED -	REVISED -	
PLOT DATE = 12/3/2024	DATE - 12/03/24	REVISED -	

STATE OF ILLINOIS
DEPARTMENT OF TRANSPORTATION

SUGGESTED EROSION CONTROL - STAGE 2
W. 143RD STREET

SCALE: 1" = 50' | SHEET OF SHEETS | STA. BEGIN TO STA. 75+00

F.A.U RTE.	SECTION	COUNTY	TOTAL SHEETS	SHEET NO.
2520	16-00078-00-CH	COOK	228	57

CONTRACT NO. 61K89

ILLINOIS | FED. AID PROJECT

PLOT DRIVER = $PLTDRV$LS
PEN TABLE = $PENTBL$LS
FILE NAME = pw:\\patricksco-pw.bentley.com:patricksco-pw-07\Documents\Orland Park\22277.005\12_Design\12-3_CADD\SHEETS\143HD-Erosion-sht-03.dgn

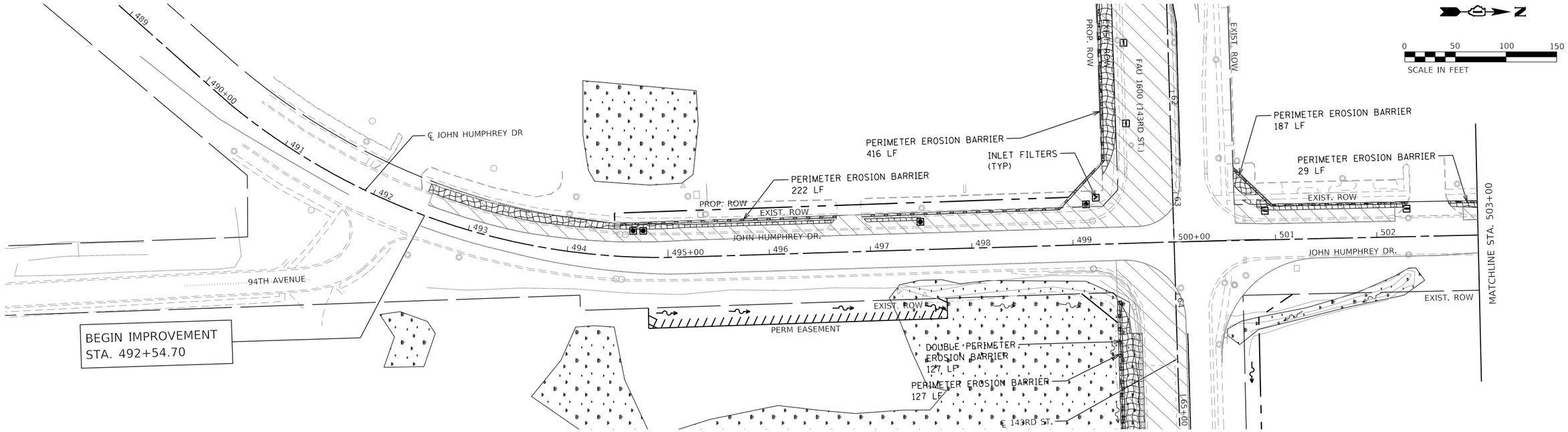

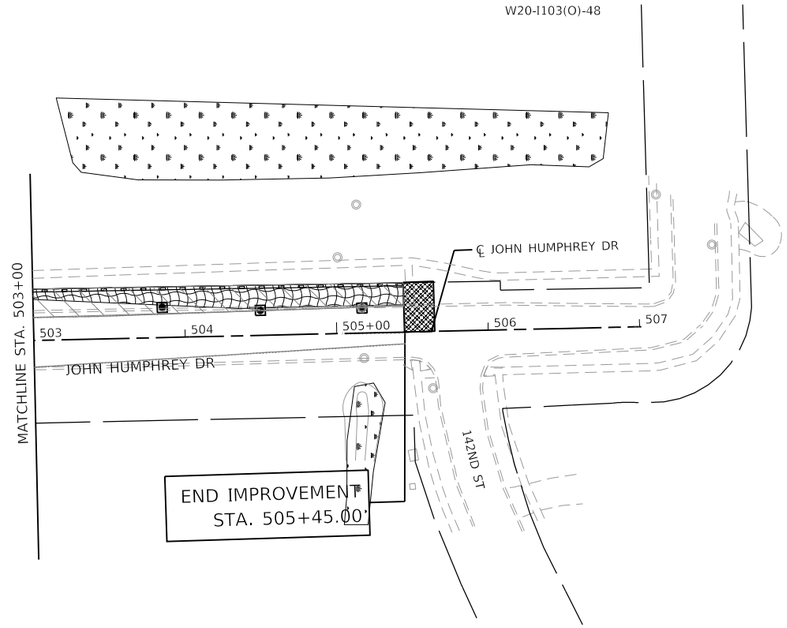

LEGEND:

- INLET AND PIPE PROTECTION
- INLET FILTER
- TEMPORARY DITCH CHECK
- DITCH FLOW
- PERIMETER EROSION BARRIER
- DOUBLE PERIMETER EROSION BARRIER
- EROSION CONTROL BLANKET
- STABILIZED CONSTRUCTION ENTRANCE
- EXISTING WETLANDS

NOTE: ALL PERIMETER EROSION BARRIER TO BE INSTALLED PRIOR TO PRE-STAGE WORK. PERIMETER EROSION BARRIER AND DITCH CHECKS SHOWN AT APPROXIMATE OFFSET.

PLOT DRIVER = $PLTDRV1S
PEN TABLE = $PENTBL1S
FILE NAME = pw:\\patricksco-pw.bentley.com:pstrickco-pw07\Documents\Orland Park\22277.005\12_Design\12-3_CADD\SHEETS\143HD-Erosion-sht-04.dgn

CHRISTOPHER B. BURKE ENGINEERING, LTD.
9575 W. Higgins Road, Suite 600
Rosemont, Illinois 60018
(847) 823-0500

USER NAME = dtroyer	DESIGNED -	REVISED -	
	DRAWN -	REVISED -	
PLOT SCALE = 100:0.0000 ':" / in.	CHECKED -	REVISED -	
PLOT DATE = 12/3/2024	DATE - 12/03/24	REVISED -	

STATE OF ILLINOIS
DEPARTMENT OF TRANSPORTATION

SUGGESTED EROSION CONTROL – STAGE 2
JOHN HUMPHREY DRIVE

SCALE: 1" = 50' | SHEET OF SHEETS | STA. 492+00 TO STA. 506+00

F.A.U RTE.	SECTION	COUNTY	TOTAL SHEETS	SHEET NO.
2520	16-00078-00-CH	COOK	228	58
		CONTRACT NO. 61K89		
		ILLINOIS	FED. AID PROJECT	

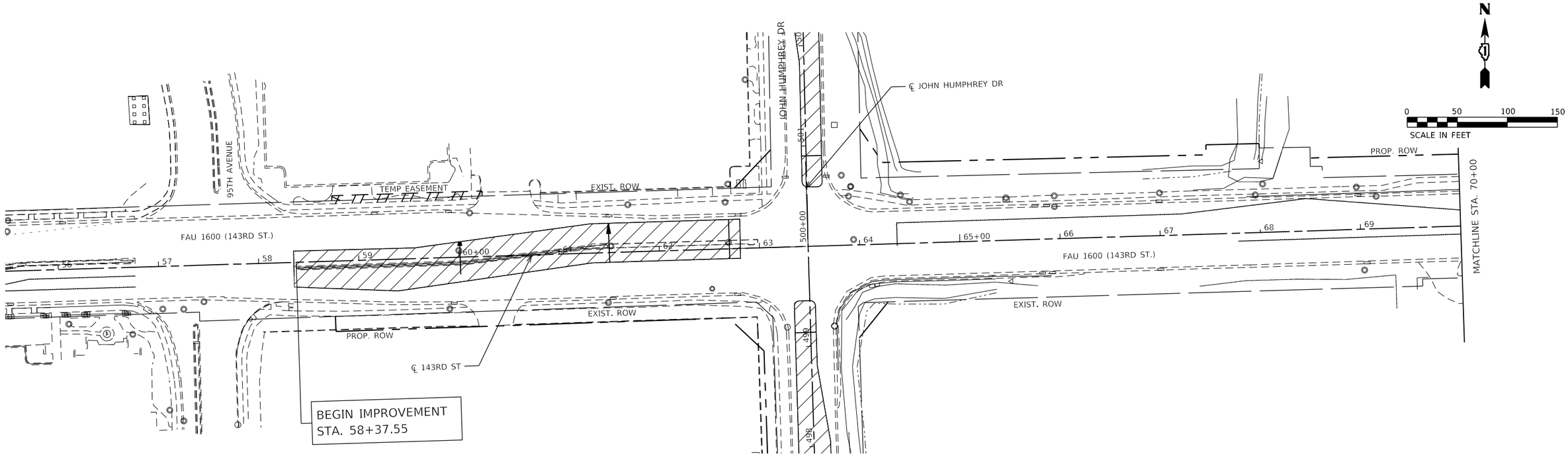

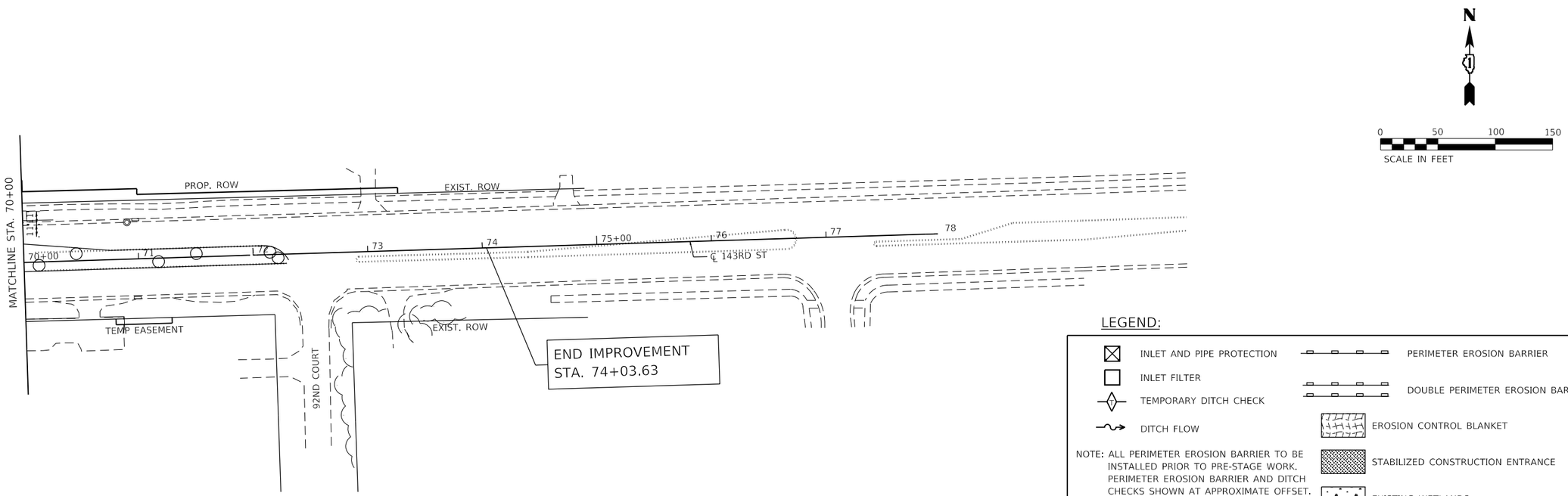

LEGEND:

- INLET AND PIPE PROTECTION
- INLET FILTER
- TEMPORARY DITCH CHECK
- DITCH FLOW
- PERIMETER EROSION BARRIER
- DOUBLE PERIMETER EROSION BARRIER
- EROSION CONTROL BLANKET
- STABILIZED CONSTRUCTION ENTRANCE
- EXISTING WETLANDS

NOTE: ALL PERIMETER EROSION BARRIER TO BE INSTALLED PRIOR TO PRE-STAGE WORK. PERIMETER EROSION BARRIER AND DITCH CHECKS SHOWN AT APPROXIMATE OFFSET.

CHRISTOPHER B. BURKE ENGINEERING, LTD.
9575 W. Higgins Road, Suite 600
Rosemont, Illinois 60018
(847) 823-0500

USER NAME = dtroyer	DESIGNED -	REVISED -	
	DRAWN -	REVISED -	
PLOT SCALE = 100:0.0000 ':' / in.	CHECKED -	REVISED -	
PLOT DATE = 12/3/2024	DATE - 12/03/24	REVISED -	

STATE OF ILLINOIS
DEPARTMENT OF TRANSPORTATION

SUGGESTED EROSION CONTROL - STAGE 3
W. 143RD STREET

S | SHEET OF SHEETS | STA. TO STA.

F.A.U RTE.	SECTION	COUNTY	TOTAL SHEETS	SHEET NO.
2520	16-00078-00-CH	COOK	228	59

CONTRACT NO. 61K89

ILLINOIS | FED. AID PROJECT

PLOT DRIVER = $PLTDRV15
PEN TABLE = $PENTBL15
FILE NAME = pw:\\patrick:cos-pw.bentley.com:patrickcos-pw-07\Documents\Orland Park\22277.005\12_Design\12-3_CADD\SHEETS\1433HD-Erosion-sht-05.dgn

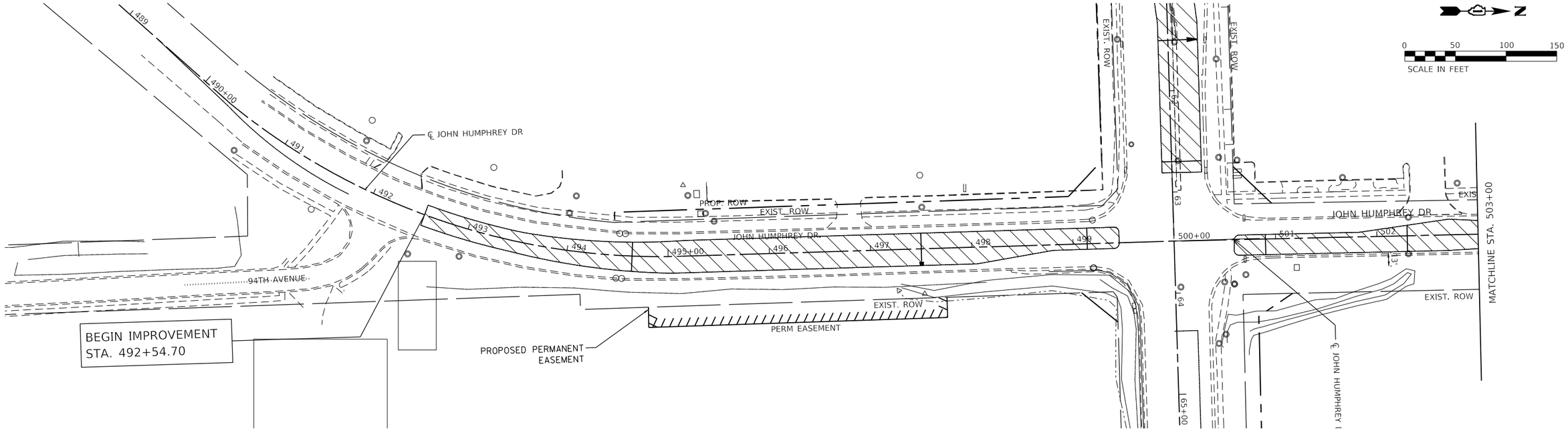

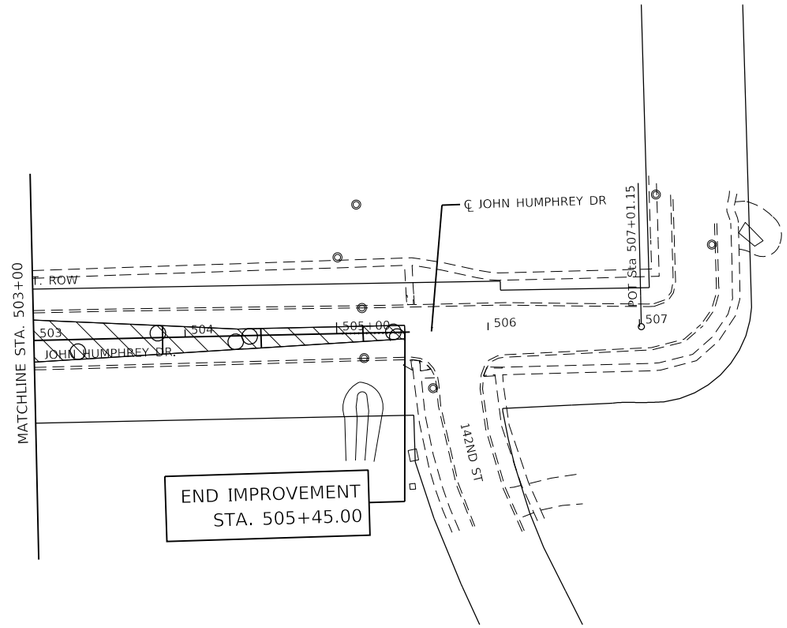

LEGEND:

- INLET AND PIPE PROTECTION
- INLET FILTER
- TEMPORARY DITCH CHECK
- DITCH FLOW
- PERIMETER EROSION BARRIER
- DOUBLE PERIMETER EROSION BARRIER
- EROSION CONTROL BLANKET
- STABILIZED CONSTRUCTION ENTRANCE
- EXISTING WETLANDS

NOTE: ALL PERIMETER EROSION BARRIER TO BE INSTALLED PRIOR TO PRE-STAGE WORK. PERIMETER EROSION BARRIER AND DITCH CHECKS SHOWN AT APPROXIMATE OFFSET.

PLOT DRIVER = $PLTDRV1S
PEN TABLE = $PENTBL1S
FILE NAME = pw:\\patrickco-pw.bentley.com:pstrickco-pw-01\Documents\Orland Park\22277.005\12_Design\12-3_CADD\SHEETS\143HD-Erosion-sht-06.dgn

CHRISTOPHER B. BURKE ENGINEERING, LTD.
9575 W. Higgins Road, Suite 600
Rosemont, Illinois 60018
(847) 823-0500

USER NAME = dtroyer	DESIGNED -	REVISED -	
	DRAWN -	REVISED -	
PLOT SCALE = 100:0.0000 ':" / in.	CHECKED -	REVISED -	
PLOT DATE = 12/3/2024	DATE - 12/03/24	REVISED -	

STATE OF ILLINOIS
DEPARTMENT OF TRANSPORTATION

SUGGESTED EROSION CONTROL – STAGE 3
JOHN HUMPHREY DRIVE

SHEET OF SHEETS STA. TO STA.

F.A.U RTE.	SECTION	COUNTY	TOTAL SHEETS	SHEET NO.
2520	16-00078-00-CH	COOK	228	60
		CONTRACT NO. 61K89		
	ILLINOIS	FED. AID PROJECT		

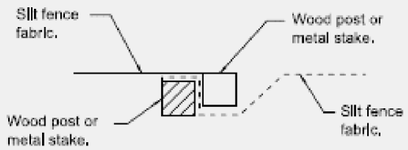

Place end-post (stake) of first silt fence adjacent to end-post (stake) of second silt fence with fabric positioned as shown.

STEP 1

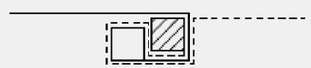

Rotate posts (stakes) together 180° clockwise and drive both posts (stakes) 18 (450) into ground.

STEP 2

ATTACHING TWO SILT FILTER FENCES

(Not applicable for J-hooks)

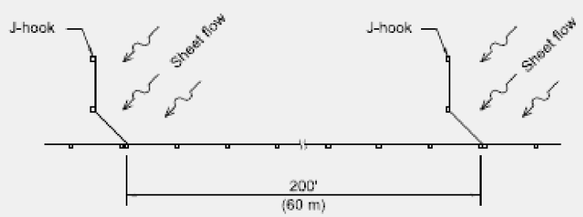

SILT FILTER J-HOOK PLACEMENT

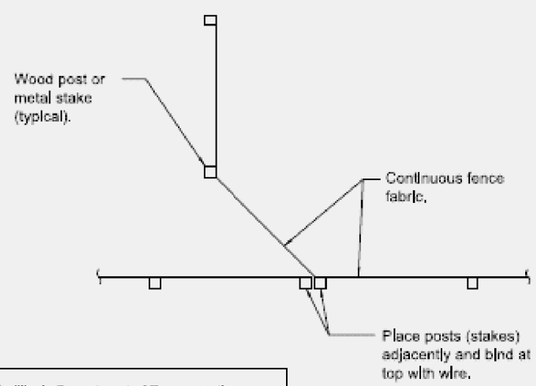

J-HOOK

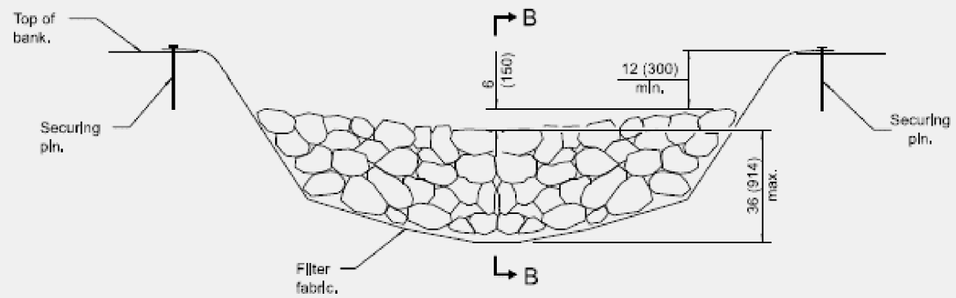

ELEVATION

- When the ditch check is within the clear zone and the road is open to traffic, the traffic approach slope of the aggregate shall be 1:4 (V:H).

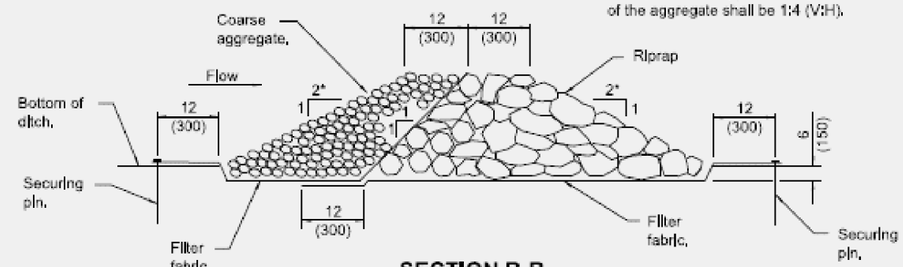

SECTION B-B

AGGREGATE DITCH CHECK

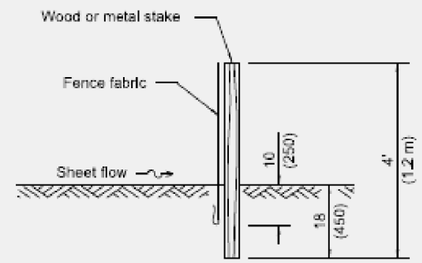

SLICE METHOD

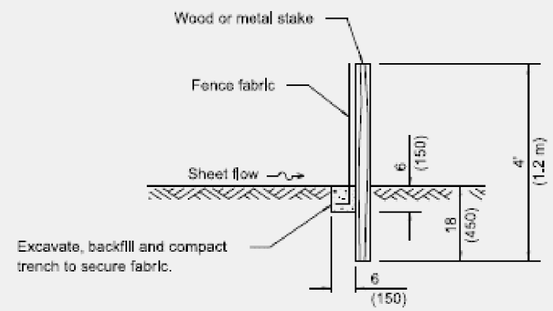

TRENCH METHOD

SECTION A-A

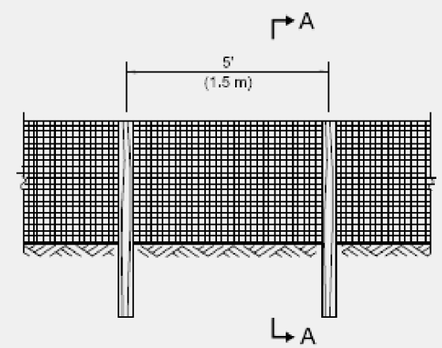

ELEVATION

SILT FILTER FENCE AS A PERIMETER EROSION BARRIER

PAY ITEM: 28000400

GENERAL NOTES

The installation details and dimensions shown for perimeter erosion barriers shall also apply for inlet and pipe protection.

All dimensions are in inches (millimeters) unless otherwise shown.

Illinois Department of Transportation

APPROVED January 1 2013
Michael Brand
ENGINEER OF POLICY AND PROCEDURES

APPROVED January 1 2013
ENGINEER OF DESIGN AND ENVIRONMENT

ISSUED 1-1-07

DATE	REVISIONS
1-1-13	Corrected notation for flowline (℄)
	on SEDIMENT BASIN ELEVATION
1-1-12	Omitted hay/straw perimeter barrier.
	Added SLICE METHOD to
	SECTION A-A

TEMPORARY EROSION CONTROL SYSTEMS

(Sheet 1 of 2)

STANDARD 280001-07

PLOT DRIVER = SPLTDRVLS
PEN TABLE = SPENTBLLS
FILE NAME = pw://patrick:cos-pw.bentley.com:pstrick:cos-pw-07/Documents/Orland Park\22277.005\12_Design\12.3_CADD\SHEETS\143HD-Erosion-silt-Details.dgn

CHRISTOPHER B. BURKE ENGINEERING, LTD.
9575 W. Higgins Road, Suite 600
Rosemont, Illinois 60018
(847) 823-0500

USER NAME = dtroyer	DESIGNED -	REVISED -	
	DRAWN -	REVISED -	
PLOT SCALE = 100:0.0000 ':' / in.	CHECKED -	REVISED -	
PLOT DATE = 12/3/2024	DATE - 12/03/24	REVISED -	

STATE OF ILLINOIS
DEPARTMENT OF TRANSPORTATION

SUGGESTED EROSION CONTROL DETAILS

SCALE: N.T.S | SHEET OF SHEETS | STA. 492+00 TO STA. 506+00

F.A.U RTE.	SECTION	COUNTY	TOTAL SHEETS	SHEET NO.
2520	16-00078-00-CH	COOK	228	61
		CONTRACT NO. 61K89		
	ILLINOIS	FED. AID PROJECT		

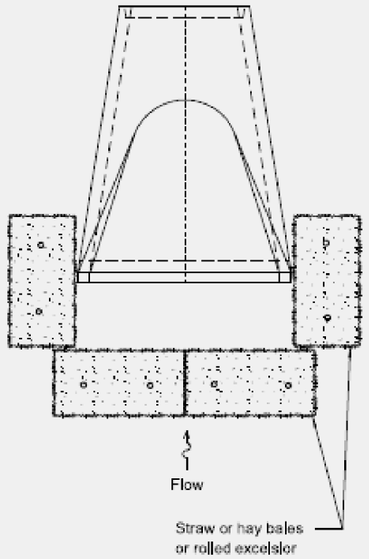

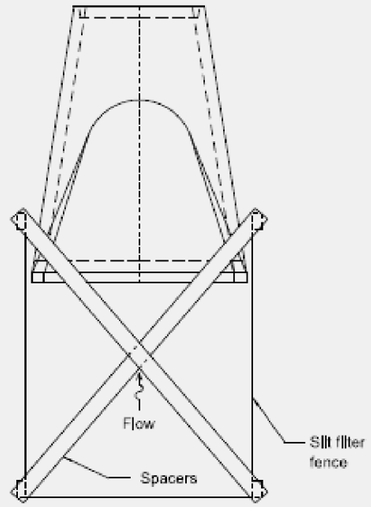

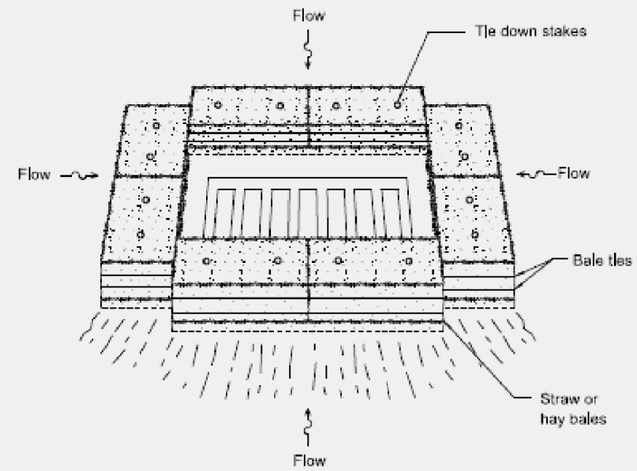

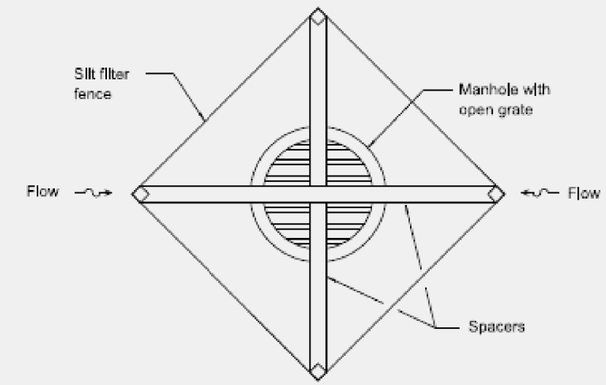

INLET AND PIPE PROTECTION

PAY ITEM: 28000500

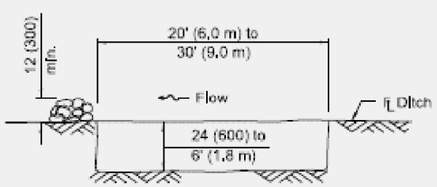

The performance of the basin will improve if put into a series.

ELEVATION

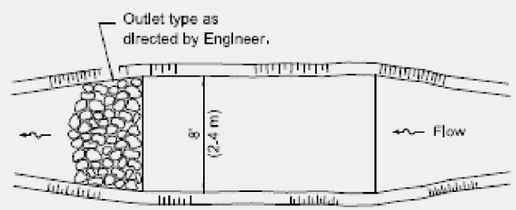

The long dimension should be parallel with the direction of the flow. Accumulated silt shall be removed anytime the basins become 75% filled.

PLAN

SEDIMENT BASIN

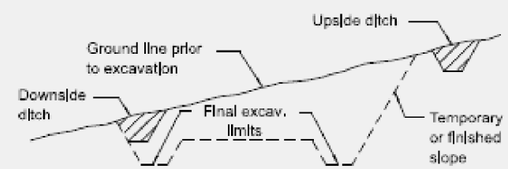

TYPICAL CUT CROSS-SECTION

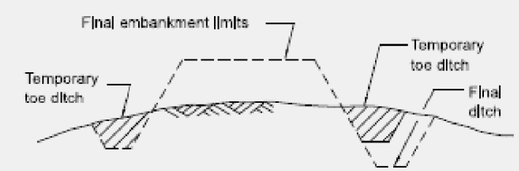

TYPICAL FILL CROSS-SECTION

TEMPORARY DITCHES FOR CUT & FILL SECTIONS

Illinois Department of Transportation

APPROVED January 1 2013
ENGINEER OF POLICY AND PROCEDURES

APPROVED January 1 2013
ENGINEER OF DESIGN AND ENVIRONMENT

ISSUED 1-1-07

TEMPORARY EROSION CONTROL SYSTMES

(Sheet 2 of 2)

STANDARD 280001-07

PLOT DRIVER = SPLTDRV15
PEN TABLE = SPENTBL15
FILE NAME = pw:\\pathicko-pw.bentley.com:pathicko-pw07\Documents\Orland Park\22277.005\12_Design\12-3_CADD\SHEETS\143HD-Erosion-site-Details 2.dgn

CHRISTOPHER B. BURKE ENGINEERING, LTD.
9575 W. Higgins Road, Suite 600
Rosemont, Illinois 60018
(847) 823-0500

USER NAME = dtroyer	DESIGNED -	REVISED -	STATE OF ILLINOIS DEPARTMENT OF TRANSPORTATION
	DRAWN -	REVISED -	
PLOT SCALE = 100:0.0000 ':" / in.	CHECKED -	REVISED -	
PLOT DATE = 12/3/2024	DATE - 12/03/24	REVISED -	

SUGGESTED EROSION CONTROL DETAILS

SCALE: N.T.S | SHEET OF SHEETS | STA. 492+00 TO STA. 506+00

F.A.U RTE.	SECTION	COUNTY	TOTAL SHEETS	SHEET NO.
2520	16-00078-00-CH	COOK	228	62
		CONTRACT NO. 61K89		
		ILLINOIS	FED. AID PROJECT	

ROLLED EROSION CONTROL PRODUCTS

PAY ITEM: 28000305

STAKING PATTERN GUIDE

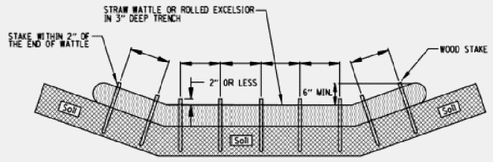

NOTES:
1. OVERLAP MINIMUM IS THE DIAMETER OF THE ROLL.
2. 4' SPACING FOR WATTLES.
3. 2' SPACING FOR ROLLED EXCELSIOR.
4. OR SPACE ACCORDING TO MANUFACTURER'S SPECIFICATIONS.

STAKE DETAIL

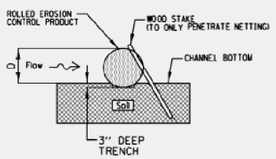

NOTES:
1. DRAWINGS ARE NOT TO SCALE.
2. ENDS OF WATTLES OR ROLLED EXCELSIOR SHALL BE TURNED AT LEAST 6" UPSLOPE.
3. RECOMMENDED STAKES ARE 1 1/8" WIDE x 1 1/8" THICK x 30" LONG.
4. STAKES SHALL NOT EXTEND ABOVE THE STRAW WATTLE MORE THAN 2".
5. SPACING: THE TOE OF THE UPSTREAM DITCH CHECK SHALL CREATE A HORIZONTAL LINE WITH THE TOP OF THE DOWNSTREAM DITCH CHECK.

REFERENCE
Project
Designed Date
Checked Date
Approved Date

STANDARD DWG. NO. IUM-514
SHEET 1 OF 1
DATE 08-2-2019

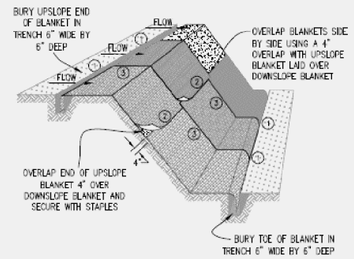

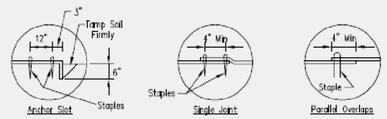

DETAIL 1 DETAIL 2 DETAIL 3

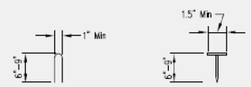

STAPLE DETAIL PUSH PIN DETAIL

NOTES:

1. Staples shall be placed in a diamond pattern at 2 per s.y. for stiched blankets. Non-stiched shall use 4 staples per s.y. of material. This equates to 200 staples with stiched blanket and 400 staples with non-stiched blanket per 100 s.y. of material.
2. Staple or push pin lengths shall be selected based on soil type and conditions. (minimum staple length is 6")
3. Erosion control material shall be placed in contact with the soil over a prepared seedbed.
4. All anchor slots shall be stapled at approximately 12" intervals.

PAY ITEM: 25100630

EROSION CONTROL BLANKET INSTALLATION DETAILS

STABILIZED CONSTRUCTION ENTRANCE PLAN

PAY ITEM: Z0013797

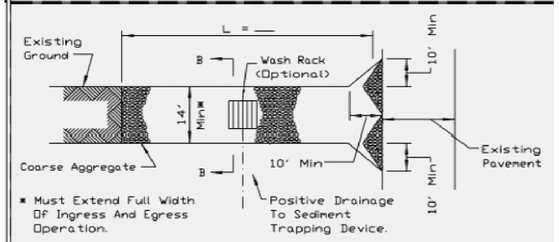

PLAN VIEW

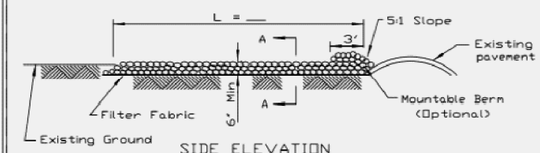

SIDE ELEVATION

NOTES:
1. Filter fabric shall meet the requirements of material specification 592 GEOTEXTILE, Table I or 2, Class I, II or IV and shall be placed over the cleared area prior to the placing of rock.
2. Rock or reclaimed concrete shall meet one of the following IDOT coarse aggregate gradation, CA-1, CA-2, CA-3 or CA-4 and be placed according to construction specification 25 ROCKFILL using placement Method 1 and Class III compaction.
3. Any drainage facilities required because of washing shall be constructed according to manufacturers specifications.
4. If wash racks are used they shall be installed according to the manufacturer's specifications.

REFERENCE
Project
Designed Date
Checked Date
Approved Date

NRCS Natural Resources Conservation Service

STANDARD DWG. NO. IL-630
SHEET 1 OF 2
DATE 8-18-94

STABILIZED CONSTRUCTION ENTRANCE PLAN

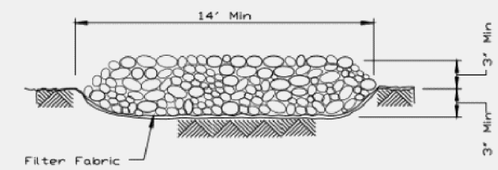

SECTION A-A

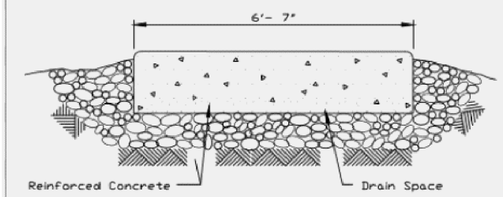

SECTION B-B

REFERENCE
Project
Designed Date
Checked Date
Approved Date

NRCS Natural Resources Conservation Service

STANDARD DWG. NO. IL-630
SHEET 2 OF 2
DATE 8-18-94

INLET PROTECTION - PAVED AREAS
DROP-IN PROTECTION

PAY ITEM: 28000510

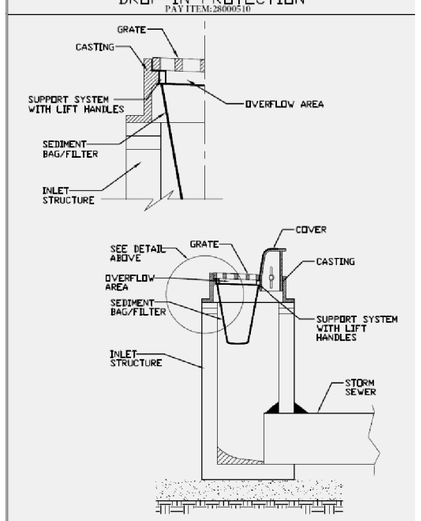

REFERENCE
Project
Designed Date
Checked Date
Approved Date

STANDARD DWG. NO. IUM-561D
SHEET 1 OF 1
DATE 01-11-11

PLOT DRIVER = SPLTDRVLS
PEN TABLE = SPENTBLLS
FILE NAME = pw:\\pathlicko-pw.bentley.com:pathlicko-pw-07\Documents\Orland Park\22277.005\2_Design\12.3_CADD\SHEETS\143\HD-Erosion-dtl-Details 3.dgn

CHRISTOPHER B. BURKE ENGINEERING, LTD.
9575 W. Higgins Road, Suite 600
Rosemont, Illinois 60018
(847) 823-0500

USER NAME = dtroyer	DESIGNED -	REVISED -	
	DRAWN -	REVISED -	
PLOT SCALE = 100:0.0000 ':" / in.	CHECKED -	REVISED -	
PLOT DATE = 12/3/2024	DATE - 12/03/24	REVISED -	

STATE OF ILLINOIS
DEPARTMENT OF TRANSPORTATION

SUGGESTED EROSION CONTROL DETAILS

SCALE: N.T.S | SHEET OF SHEETS | STA. 492+00 TO STA. 506+00

F.A.U RTE.	SECTION	COUNTY	TOTAL SHEETS	SHEET NO.
2520	16-00078-00-CH	COOK	228	63
		CONTRACT NO. 61K89		
		ILLINOIS	FED. AID PROJECT	

DRAINAGE NOTES

1. MAINTAINING DRAINAGE; IT SHALL BE THE CONTRACTOR'S RESPONSIBILITY TO MAINTAIN DRAINAGE FLOWS AT ALL TIMES DURING THE PERFORMANCE OF THE WORK. METHODS USED BY THE CONTRACTOR SHALL BE SUBJECT TO APPROVAL OF THE ENGINEER.

2. LENGTHS AND SIZES OF EXISTING STORM SEWERS AS SHOWN ON THE PLANS SHALL BE VERIFIED IN THE FIELD PRIOR TO INSTALLATION OF PROPOSED DRAINAGE ITEMS. THE INVERTS OF PROPOSED DRAINAGE ITEMS CONNECTING TO EXISTING SEWERS OR STRUCTURES MAY REQUIRE REVISIONS TO MEET EXISTING FIELD CONDITIONS. ANY ADJUSTMENTS SHALL BE AS DIRECTED BY THE ENGINEER.

3. EXISTING DRAINAGE STRUCTURES TO BE LEFT IN PLACE SHALL BE PROTECTED DURING CONSTRUCTION. IF IN THE OPINION OF THE ENGINEER, THE DRAINAGE STRUCTURES ARE DAMAGED DUE TO THE CONTRACTOR'S OPERATION, THEY SHALL BE REPLACED IN KIND AT NO ADDITIONAL COST.

4. DURING CONSTRUCTION OPERATIONS, IF ANY LOOSE MATERIAL IS DEPOSITED IN THE FLOW LINE OF THE GUTTER OR DRAINAGE STRUCTURES, DITCHES, ETC. SO THAT THE NATURAL FLOW OF WATER IS OBSTRUCTED, THE LOOSE MATERIAL SHALL BE REMOVED AT THE CLOSE OF EACH WORK DAY. AT THE CONCLUSION OF THE CONSTRUCTION OPERATIONS, ALL DRAINAGE STRUCTURES AND FLOW LINES ARE TO BE FREE FROM DIRT AND DEBRIS. THE CONTRACTORS FAILURE TO PROVIDE THE ABOVE WILL PRECLUDE ANY POSSIBLE ADDED COMPENSATION REQUESTED DUE TO DELAYS OR UNSUITABLE MATERIAL CREATED AS A RESULT THEREOF.

5. ALL EXISTING FIELD DRAINAGE TILE AND OFF-SITE STORM SEWER ENCOUNTERED OR DAMAGED DURING CONSTRUCTION ARE TO BE RESTORED TO THEIR ORIGINAL CONDITIONS. PROPERLY REROUTED AND /OR CONNECTED TO THE STORM SEWER SYSTEM OR PROPOSED DITCHES UNLESS OTHERWISE SPECIFIED.

6. THE CONTRACTOR SHALL VERIFY WHEN FLAT SLAB TOPS ARE REQUIRED ON MANHOLES AND CATCH BASINS. NO ADDITIONAL COMPENSATION SHALL BE PROVIDED FOR THE USE OF FLAT SLAB TOPS, UNLESS NOTED OTHERWISE ON PLANS.

7. THE LOCATION OF EXISTING DRAINAGE STRUCTURES, STORM SEWERS, WATER MAINS, SANITARY SEWERS, AND ANY OTHER PUBLIC OR PRIVATE UTILITIES AS SHOWN ON THE PLANS IS APPROXIMATE, AND THEIR EXACT LOCATION IS TO BE DETERMINED IN THE FIELD BY THE CONTRACTOR.

8. ALL DRAINAGE STRUCTURES, MANHOLES, AND CATCH BASINS SHALL HAVE A 2-FOOT DEEP SUMP (MINIMUM) BETWEEN THE BOTTOM OF THE LOWEST STORM SEWER INVERT AND THE BOTTOM OF THE DRAINAGE STRUCTURE OR CATCH BASIN.

9. THE INFORMATION PROVIDED IS ESTIMATED BASED UPON EXISTING SURVEY AND WILL REQUIRE ADJUSTMENT BY THE CONTRACTOR AS NECESSARY TO FULFILL THE INTENT OF THE DRAINAGE PLANS.

10. THE CONTRACTOR SHALL VERIFY EXISTING DRAINAGE STRUCTURE DATA IN FIELD PRIOR TO INSTALLATION OF DRAINAGE ITEMS. GRADES, ELEVATIONS, SIZES, AND LENGTHS OF EXISTING STORM SEWER WERE DETERMINED FROM AVAILABLE RECORD DRAWINGS AND FIELD SURVEY. THE INVERTS OF THE PROPOSED DRAINAGE STRUCTURES MAY REQUIRE REVISIONS TO MEET EXISTING FIELD CONDITIONS. ANY ADJUSTMENTS SHALL BE AS DIRECTED BY THE ENGINEER. THE COST OF THIS WORK IS TO BE INCLUDED IN THE UNIT PRICES OF THE ITEMS TO BE INSTALLED OR REPAIRED AND NO ADDITIONAL COMPENSATION WILL BE ALLOWED.

11. DRAINAGE STRUCTURE ELEVATIONS: RIM ELEVATIONS GIVEN ON THE PLANS ARE ONLY TO ASSIST THE CONTRACTOR IN DETERMINING THE APPROXIMATE OVERALL HEIGHT OF THE STRUCTURE. FRAMES OF ALL NEW, ADJUSTED OR RECONSTRUCTED STRUCTURES, WILL BE ADJUSTED TO THE FINAL ELEVATION OF THE AREA IN WHICH THEY ARE LOCATED AS PART OF THE STRUCTURE COST. DRAINAGE STRUCTURE GRADES SHALL BE VERIFIED IN THE FIELD PRIOR TO FABRICATION AND INSTALLATION OF DRAINAGE ITEMS. GRADES OR SEWER LINES WERE DETERMINED FROM AVAILABLE PLANS AND SURVEY. THE INVERTS OF THE PROPOSED SEWERS CONNECTING TO EXISTING DRAINAGE STRUCTURES MAY REQUIRE REVISIONS TO MEET EXISTING FIELD CONDITIONS. ANY ADJUSTMENTS SHALL BE AS DIRECTED BY THE ENGINEER.

12. EXCAVATION, BACKFILL, DISPOSING OF SURPLUS MATERIAL AND RESTORATION SHALL BE INCLUDED IN THE AWARDED BID PRICE OF STORM SEWERS, HEADWALLS AND DRAINAGE STRUCTURES. RESTORATION IS DEFINED AS REQUIRED TOPSOIL, SEEDING AND EROSION CONTROL BLANKET AS APPROVED BY THE ENGINEER.

13. THE TOP SURFACE, RIM, OF ALL DRAINAGE STRUCTURES SHALL BE BROUGHT TO FLUSH WITH EXISTING GROUND.

DESCRIPTION	ELEVATION
HEADWALL	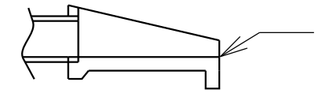 INVERT ELEVATION AND OFFSET ARE GIVEN AT THIS POINT
TYPE 1 FRAME AND GRATE	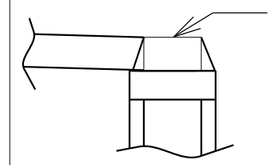 RIM ELEVATION AND OFFSET ARE GIVEN AT CENTER OF GRATE
TYPE 11V AND 20 FRAME AND GRATE	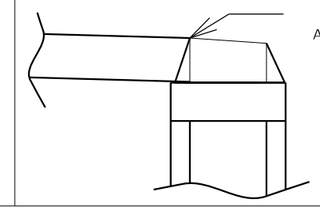 RIM ELEVATION AND OFFSET ARE GIVEN AT EDGE OF PAVEMENT

DRAINAGE STRUCTURE SCHEDULE

STRUCTURE NO.	STRUCTURE TYPE	ROUTE	STATION	OFFSET	RIM	INV (N)	INV (S)	INV (E)	INV (W)	STANDARD	FRAME & GRATE	PAY ITEM
S101	MANHOLES, TYPE A, 4'-DIAMETER, TYPE 1 FRAME, CLOSED LID	143rd Street	60+00.00	54.84' LT	706.70	-	699.77	699.52	-	602401-07	604001-05	60218400
S102	MANHOLES, TYPE A, 4'-DIAMETER, TYPE 1 FRAME, CLOSED LID	143rd Street	61+50.00	50.34' LT	704.09	-	698.38	697.75	698.80	602401-07	604001-05	60218400
S103	INLETS, TYPE A, TYPE 20 FRAME AND GRATE	143rd Street	60+00.00	43.78' RT	706.28	701.85	-	-	-	602301-04	604071-07	60237420
S104	CATCH BASINS, TYPE A, 4'-DIAMETER, TYPE 20 FRAME AND GRATE	143rd Street	60+00.00	46.91' LT	706.15	699.82	700.30	-	-	602001-02	604071-07	60201310
S105	INLETS, TYPE A, TYPE 20 FRAME AND GRATE	143rd Street	61+50.00	43.78' RT	703.29	699.63	-	-	-	602301-04	604071-07	60237420
S106	CATCH BASINS, TYPE A, 4'-DIAMETER, TYPE 20 FRAME AND GRATE	143rd Street	61+50.00	14.25' LT	704.02	699.37	699.37	-	-	602001-02	604071-07	60201310
S107	CATCH BASINS, TYPE A, 4'-DIAMETER, TYPE 20 FRAME AND GRATE	143rd Street	61+50.00	42.25' LT	703.54	698.47	699.22	-	-	602001-02	604071-07	60201310
S201	MANHOLES, TYPE A, 4'-DIAMETER, TYPE 1 FRAME, CLOSED LID	143rd Street	62+30.00	50.34' LT	702.49	-	696.75	-	697.35	602401-07	604001-05	60218400
S202	CATCH BASINS, TYPE A, 4'-DIAMETER, TYPE 20 FRAME AND GRATE	143rd Street	64+17.17	66.42' LT	698.16	693.18	693.35	-	-	602001-02	604071-07	60201310
S203	NOT USED											
S204	NOT USED											
S205	NOT USED											
S206	CATCH BASINS, TYPE A, 4'-DIAMETER, TYPE 20 FRAME AND GRATE	143rd Street	71+00.00	43.40' LT	706.74	-	699.08	-	698.83	602001-02	604071-07	60201310
S207	INLETS, TYPE A, TYPE 20 FRAME AND GRATE	143rd Street	62+30.00	43.75' RT	701.70	696.41	-	-	-	602301-04	604071-07	60237420
S208	CATCH BASINS, TYPE A, 4'-DIAMETER, TYPE 20 FRAME AND GRATE	143rd Street	62+30.00	14.25' LT	702.42	695.49	696.15	695.49	-	602001-02	604071-07	60201310
S209	CATCH BASINS, TYPE A, 4'-DIAMETER, TYPE 20 FRAME AND GRATE	143rd Street	62+30.00	42.25' LT	701.94	696.70	696.70	-	-	602001-02	604071-07	60201310
S210	CATCH BASINS, TYPE A, 4'-DIAMETER, TYPE 11V FRAME AND GRATE	John Humphrey Drive	499+14.00	39.80' LT	699.81	695.88	-	695.63	-	602001-02	604056-04	60201110
S211	CATCH BASINS, TYPE A, 4'-DIAMETER, TYPE 11V FRAME AND GRATE	John Humphrey Drive	499+14.00	27.80' RT	698.51	695.41	-	-	695.41	602001-02	604056-04	60201110
S212	NOT USED											
S213	INLETS, TYPE A, TYPE 11V FRAME AND GRATE	John Humphrey Drive	499+24.00	45.96' LT	699.99	-	695.95	-	-	602301-04	604056-04	60236825
S214	NOT USED											
S215	CATCH BASINS, TYPE A, 4'-DIAMETER, TYPE 11V FRAME AND GRATE	John Humphrey Drive	499+24.00	29.66' RT	698.51	695.37	695.37	-	-	602001-02	604056-04	60201110
S216	INLETS, TYPE A, TYPE 11V FRAME AND GRATE	John Humphrey Drive	500+90.00	28.63' LT	700.47	-	-	692.52	-	602301-04	604056-04	60236825
S217	CATCH BASINS, TYPE A, 4'-DIAMETER, TYPE 11V FRAME AND GRATE	John Humphrey Drive	500+90.00	50.84' RT	698.94	-	693.50	-	693.50	602001-02	604056-04	60201110
S218	NOT USED											
S219	NOT USED											
S220	NOT USED											
S221	MANHOLES, TYPE A, 8'-DIAMETER, TYPE 20 FRAME AND GRATE	143rd Street	65+82.24	44.35' LT	695.99		-	**688.56 (EX)**	**688.56 (EX)**	602416-09	604071-07	60224464
S222	NOT USED											
S223	NOT USED											
S224	NOT USED											
S225	NOT USED											
S226	INLETS, TYPE A, TYPE 20 FRAME AND GRATE	143rd Street	69+00.00	31.64' RT	701.98	693.22	-	-	-	602301-04	604071-07	60237420
S227	INLETS, TYPE A, TYPE 20 FRAME AND GRATE	143rd Street	71+00.00	31.92' RT	706.92	700.05	-	-	-	602301-04	604071-07	60237420
S228	NOT USED											
S229	NOT USED											
S230	PRECAST REINFORCED CONCRETE FLARED END SECTIONS 60"	143rd Street	68+00.00	71.02' LT	-	-	688.28	-	-	SEE DRAINAGE DETAIL 1	SEE DRAINAGE DETAIL 1	SEE DRAINAGE DETAIL 1
S301	MANHOLES, TYPE A, 5'-DIAMETER, TYPE 1 FRAME, CLOSED LID	John Humphrey Drive	492+52.50	42.15' RT	701.40	694.59	-	-	-	602402-03	604001-05	60221100
S302	MANHOLES, TYPE A, 6'-DIAMETER, TYPE 1 FRAME, CLOSED LID	John Humphrey Drive	494+64.37	32.76' RT	699.64	694.36	694.36	-	694.36	602406-11	604001-05	60223800
S303	MANHOLES, TYPE A, 7'-DIAMETER, TYPE 1 FRAME, CLOSED LID	John Humphrey Drive	496+00.00	31.37' RT	700.00	-	694.22	694.22	-	602411-09	604001-05	60224446
S304	NOT USED											
S305	INLETS, TYPE A, TYPE 11V FRAME AND GRATE	John Humphrey Drive	494+74.74	26.13' LT	699.10	-	694.70	-	-	602301-04	604056-04	60236825
S306	CATCH BASINS, TYPE A, 4'-DIAMETER, TYPE 11V FRAME AND GRATE	John Humphrey Drive	494+64.37	25.72' LT	699.11	694.65	0.00	694.65	-	602001-02	604056-04	60201110
S307	CATCH BASINS, TYPE A, 4'-DIAMETER, TYPE 11V FRAME AND GRATE	John Humphrey Drive	494+64.37	26.20' RT	699.10	694.45	0.00	694.45	694.45	602001-02	604056-04	60201110
S308	NOT USED											
S309	INLETS, TYPE A, TYPE 11V FRAME AND GRATE	John Humphrey Drive	494+74.00	26.57' RT	699.09	-	694.50	-	-	602301-04	604056-04	60236825
S310	CATCH BASINS, TYPE A, 4'-DIAMETER, TYPE 11V FRAME AND GRATE	John Humphrey Drive	497+50.00	27.50' LT	699.39	-	-	695.40	695.40	602001-02	604056-04	60201110
S311	CATCH BASINS, TYPE A, 4'-DIAMETER, TYPE 11V FRAME AND GRATE	John Humphrey Drive	497+50.00	27.50' RT	699.39	-	-	695.07	695.07	602001-02	604056-04	60201110
S312	PRECAST REINFORCED CONCRETE FLARED END SECTIONS 24"	John Humphrey Drive	497+50.00	47.60' RT	-	-	-	-	694.40	542301-03	-	54213669
S313	PRECAST REINFORCED CONCRETE FLARED END SECTIONS 36"	John Humphrey Drive	496+00.00	48.79' RT	-	-	-	-	694.20	542301-03	-	54213681
S401	INLETS, TYPE A, TYPE 11V FRAME AND GRATE	John Humphrey Drive	502+30.00	27.50' LT	700.25	-	-	697.55	-	602301-04	604056-04	60236825
S402	CATCH BASINS, TYPE A, 4'-DIAMETER, TYPE 11V FRAME AND GRATE	John Humphrey Drive	502+30.00	29.50' RT	700.21	-	-	697.30	697.30	602001-02	604056-04	60201110
S403	PRECAST REINFORCED CONCRETE FLARED END SECTIONS 12"	John Humphrey Drive	502+15.68	50.69' RT	-	-	-	-	697.10	542301-03	-	54213657
S404	CATCH BASINS, TYPE A, 4'-DIAMETER, TYPE 11V FRAME AND GRATE	John Humphrey Drive	503+85.00	19.89' LT	700.19	696.22	-	696.22	-	602001-02	604056-04	60201110
S405	CATCH BASINS, TYPE A, 4'-DIAMETER, TYPE 11V FRAME AND GRATE	John Humphrey Drive	504+50.00	16.50' LT	699.78	696.00	696.00	696.00	-	602001-02	604056-04	60201110
S406	CATCH BASINS, TYPE A, 4'-DIAMETER, TYPE 11V FRAME AND GRATE	John Humphrey Drive	505+17.00	16.50' LT	699.06	-	695.78	695.78	-	602001-02	604056-04	60201110
S407	INLETS, TYPE A, TYPE 11V FRAME AND GRATE	John Humphrey Drive	503+85.00	24.00' RT	700.11	-	-	-	696.42	602301-04	604056-04	60236825
S408	INLETS, TYPE A, TYPE 11V FRAME AND GRATE	John Humphrey Drive	504+50.00	21.02' RT	699.69	-	-	-	696.17	602301-04	604056-04	60236825
S409	CATCH BASINS, TYPE A, 4'-DIAMETER, TYPE 11V FRAME AND GRATE	John Humphrey Drive	505+17.00	17.59' RT	699.14	-	-	-	695.65	602001-02	604056-04	60201110

STORM SEWER SCHEDULE

PIPE NO.	FROM STRUCTURE	TO STRUCTURE	LENGTH (FT)	DIA (IN)	MATERIAL	PIPE TYPE	SLOPE (%)	UPSTREAM INVERT	DOWNSTREAM INVERT	TBF (CY)	PAY ITEM
P101	S101	S102	149	15	RCP	2	0.48	699.52	698.80	60	550A0360
P102	S102	S201	80	15	RCP	2	0.50	697.75	697.35	29	550A0360
P103	S103	S104	91	12	WMQ	2	1.70	701.85	700.30	26	Z0056668
P104	S104	S101	8	12	RCP	2	0.63	699.82	699.77	6	550A0340
P105	S105	S106	58	12	WMQ	2	0.45	699.63	699.37	11	Z0056668
P106	S106	S107	28	12	RCP	2	0.54	699.37	699.22	6	550A0340
P107	S107	S102	8	12	WMQ	2	1.11	698.47	698.38	3	Z0056668
P201	S208	EX	164	24	WMQ	2	0.78	695.49	694.20	59	Z0056672
P202	S202	EX	42	15	WMQ	2	0.40	693.35	693.18	9	Z0056669
P203	NOT USED										
P204	NOT USED										
P205	NOT USED										
P206	S206	EX	200	15	RCP	2	2.81	698.83	693.22	197	550A0360
P207	S207	S208	58	15	RCP	2	0.45	696.41	696.15	21	550A0360
P208	S209	S208	28	15	WMQ	2	4.32	696.70	695.49	11	Z0056669
P209	S201	S209	8	15	WMQ	2	0.62	696.75	696.70	3	Z0056669
P210	S210	S211	68	15	WMQ	1	0.33	695.63	695.41	9	Z0056650
P211	S211	S215	10	15	RCP	1	0.39	695.41	695.37	2	550A0070
P212	NOT USED										
P213	S213	S210	12	12	RCP	1	0.59	695.95	695.88	2	550A0050
P214	NOT USED										
P215	S215	EX	83	15	WMQ	1	0.33	695.37	695.10	11	Z0056650
P216	S216	S217	79	15	RCP	2	0.45	693.86	693.50	28	550A0360
P217	S217	S202	29	15	RCP	2	0.52	693.50	693.35	8	550A0360
P218	EX	EX	52	12	RCP	1	-0.44	691.22	691.45	7	550A0050
P219	EX	EX	52	12	RCP	1	0.02	691.43	691.42	7	550A0050
P220	NOT USED										
P221	NOT USED										
P222	NOT USED										
P223	NOT USED										
P224	NOT USED										
P225	NOT USED										
P226	S226	EX	70	12	RCP	2	1.81	693.22	691.95	79	550A0340
P227	S227	S206	75	12	RCP	2	1.29	700.05	699.08	58	550A0340
P228	NOT USED										
P229	NOT USED										
P230	NOT USED										
P231	EX	S230	8	60	RCP	1	0.12	688.29	688.28	0	550A0210
P301	S301	S302	223	36	RCP	1	0.10	694.59	694.36	0	550A0160
P302	S302	S303	138	36	RCP	1	0.10	694.36	694.22	0	550A0160
P303	S303	S313	9	36	RCP	1	0.22	694.22	694.20	0	550A0160
P304	NOT USED										
P305	S305	S306	10	12	RCP	2	0.50	694.70	694.65	2	550A0340
P306	S306	S307	52	15	RCP	2	0.39	694.65	694.45	12	550A0360
P307	S307	S302	7	15	RCP	2	1.37	694.45	694.36	2	550A0360
P308	NOT USED										
P309	S309	S307	10	12	RCP	2	0.50	694.50	694.45	3	550A0340
P310	S310	S311	55	24	RCP	1	0.60	695.40	695.07	7	550A0120
P311	S311	S312	14	24	RCP	1	4.80	695.07	694.40	2	550A0120
P312	EX	S310	14	24	WMQ	1	0.36	695.45	695.40	2	Z0056654
P401	S401	S402	57	12	RCP	1	0.44	697.55	697.30	8	550A0050
P402	S402	S403	22	12	RCP	1	0.90	697.30	697.10	3	550A0050
P403	NOT USED										
P404	S404	S405	65	15	RCP	1	0.34	696.22	696.00	8	550A0070
P405	S405	S406	67	15	RCP	1	0.33	696.00	695.78	9	550A0070
P406	S406	S409	34	15	RCP	1	0.38	695.78	695.65	5	550A0070
P407	S407	S404	44	12	RCP	1	0.45	696.42	696.22	6	550A0050
P408	S408	S405	37	12	RCP	1	0.45	696.17	696.00	5	550A0050

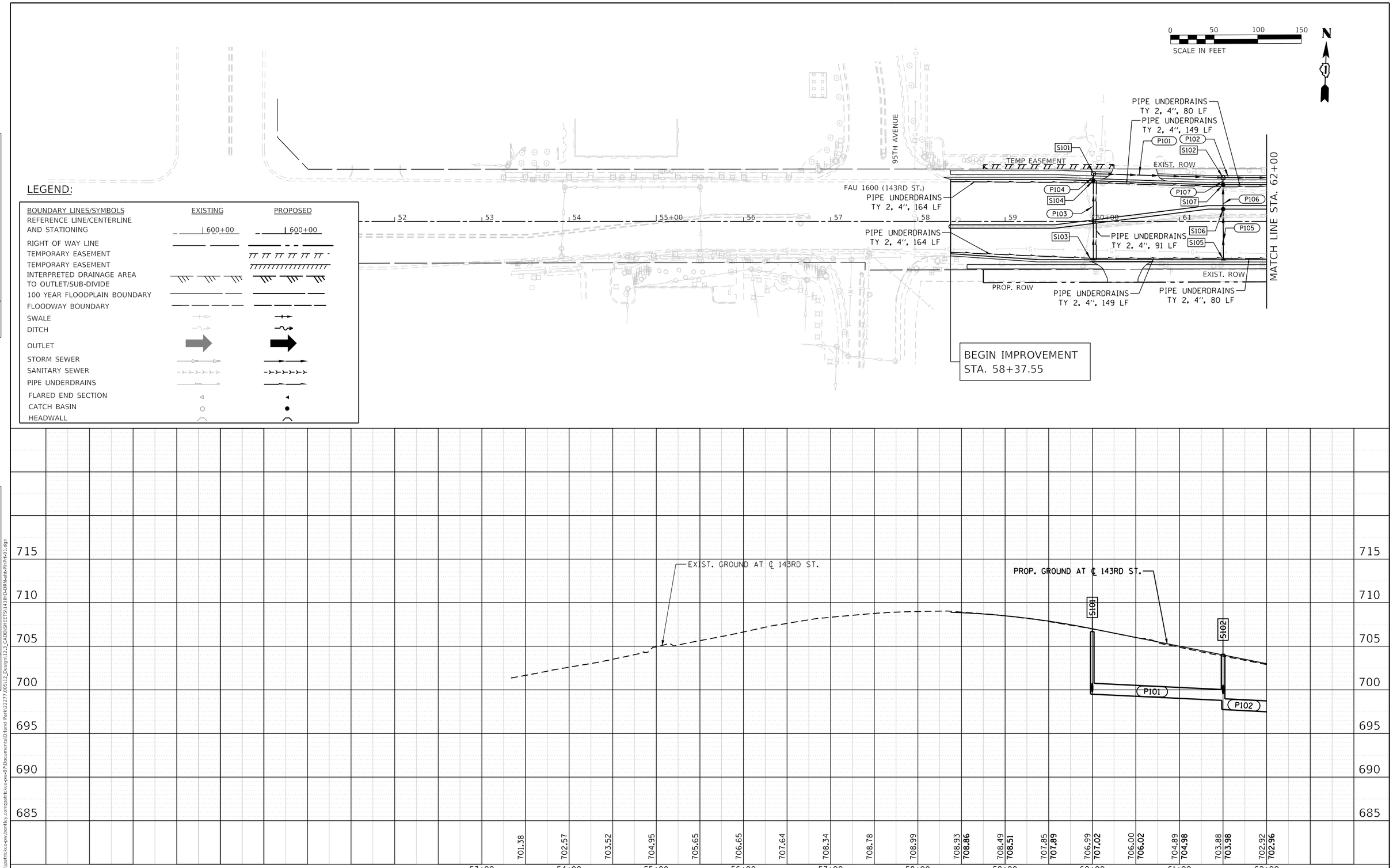

PLAN
NOTE BOOK NO.
SURVEYED
PLOTTED
ALIGNMENT CHECKED
RT. OF WAY CHECKED
CADD FILE NAME
BY
DATE

PROFILE
NOTE BOOK NO.
SURVEYED
PLOTTED
GRADES CHECKED
B.M. NOTED
STRUCTURE NOTATNS CHKD
BY
DATE

PLOT DRIVER = $PLTDRVLS
PEN TABLE = $PENTBLLS
FILE NAME = pw:\\pattrickco-pw.bentley.com:pattrickco-pw-07\Documents\Orland Park\22277.005\12_Design\12-3_CADD\SHEETS\143HD-DRN-sht-PlnPrf-01.dgn

CHRISTOPHER B. BURKE ENGINEERING, LTD.
9575 W. Higgins Road, Suite 600
Rosemont, Illinois 60018
(847) 823-0500

USER NAME = xsandoval	DESIGNED - MA	REVISED -	
	DRAWN - XS	REVISED -	
PLOT SCALE = 100.0000 ' / in.	CHECKED - JOC	REVISED -	
PLOT DATE = 12/10/2024	DATE - 12/03/24	REVISED -	

STATE OF ILLINOIS
DEPARTMENT OF TRANSPORTATION

JOHN HUMPHREY DRIVE AT 143RD STREET
DRAINAGE PLAN & PROFILE

SCALE: 1" = 50' | SHEET OF SHEETS | STA. BEGIN TO STA. 62+00

F.A.U. RTE.	SECTION	COUNTY	TOTAL SHEETS	SHEET NO.
2520	16-00078-00-CH	COOK	228	67
		CONTRACT NO. 61K89		
		ILLINOIS	FED. AID PROJECT	

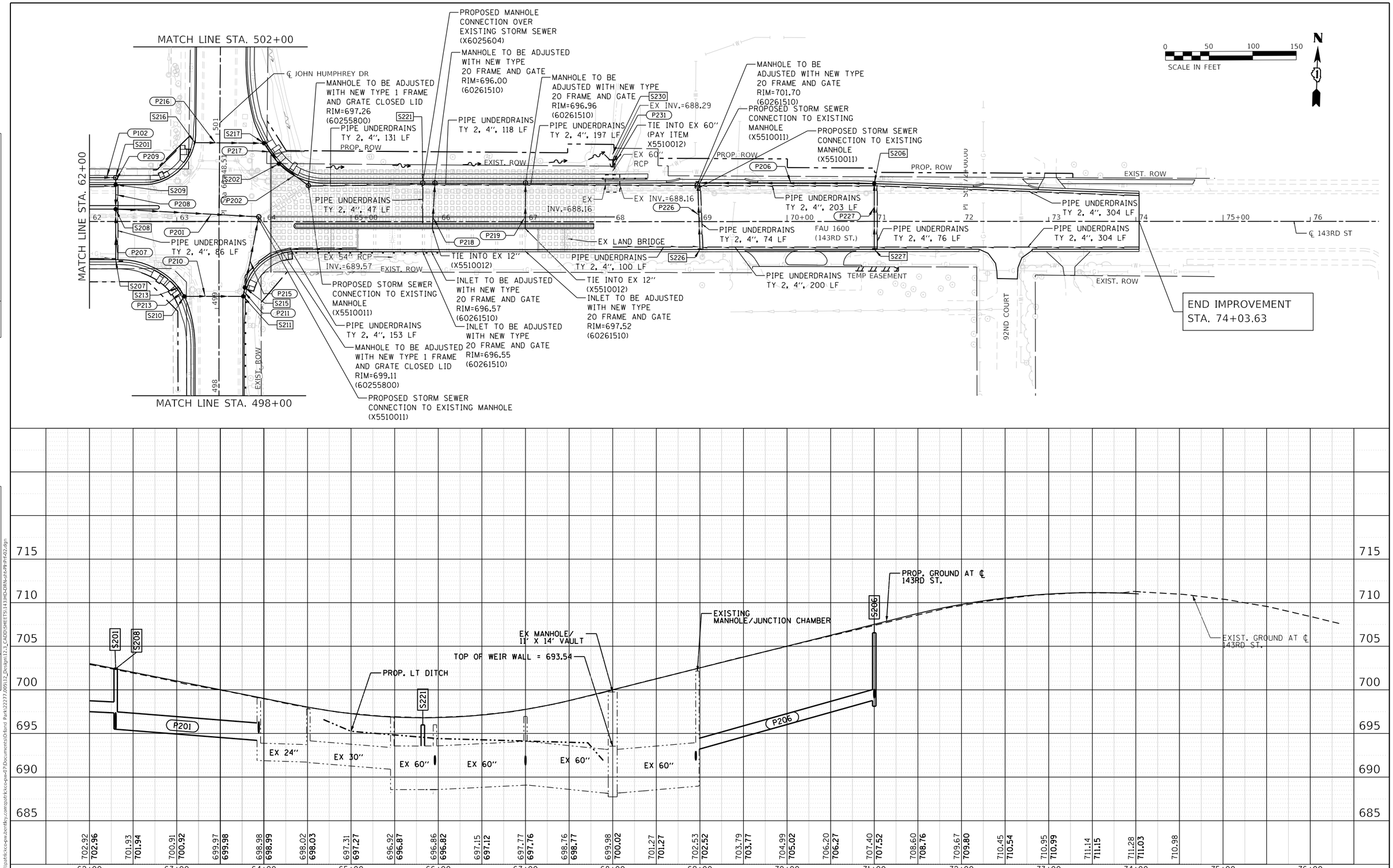

PLAN			
NOTE BOOK NO.	SURVEYED	PLOTTED	RT. OF WAY CHECKED
	ALIGNMENT CHECKED	CADD FILE NAME	

PROFILE			
NOTE BOOK NO.	SURVEYED	PLOTTED	BM. NOTED
	CHANGES CHECKED	STRUCTURE NOTATNS CHKD	

PLOT DRIVER = SPLTDRVLS
PEN TABLE = SPENTBLLS
FILE NAME = pw:\\patrickco-pw.bentley.com:patrickco-pw-07\Documents\Orland Park\22277.005\12_Design\12-3_CADD\SHEETS\1433HD-DRN-sht-PlnPrf-02.dgn

CHRISTOPHER B. BURKE ENGINEERING, LTD.
9575 W. Higgins Road, Suite 600
Rosemont, Illinois 60018
(847) 823-0500

USER NAME = xsandoval	DESIGNED - MA	REVISED -	
	DRAWN - XS	REVISED -	
PLOT SCALE = 100.0000 ' / in.	CHECKED - JOC	REVISED -	
PLOT DATE = 12/10/2024	DATE - 12/03/24	REVISED -	

STATE OF ILLINOIS
DEPARTMENT OF TRANSPORTATION

JOHN HUMPHREY DRIVE AT 143RD STREET
DRAINAGE PLAN & PROFILE

SCALE: 1" = 50' | SHEET OF SHEETS | STA. 62+00 TO STA. END

F.A.U. RTE.	SECTION	COUNTY	TOTAL SHEETS	SHEET NO.
2520	16-00078-00-CH	COOK	228	68

CONTRACT NO. 61K89

ILLINOIS | FED. AID PROJECT

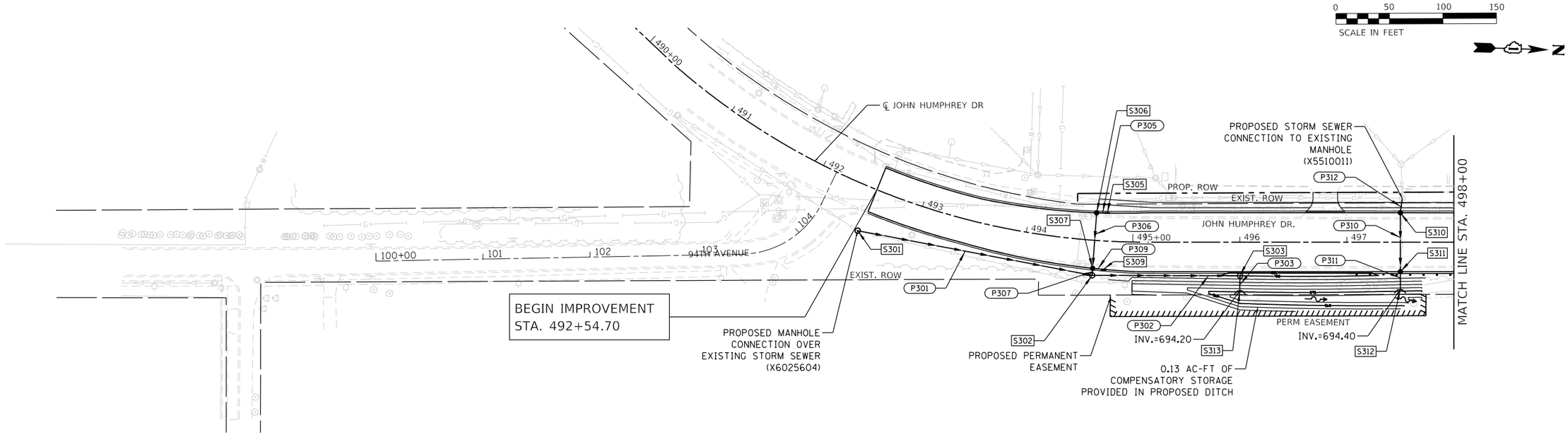

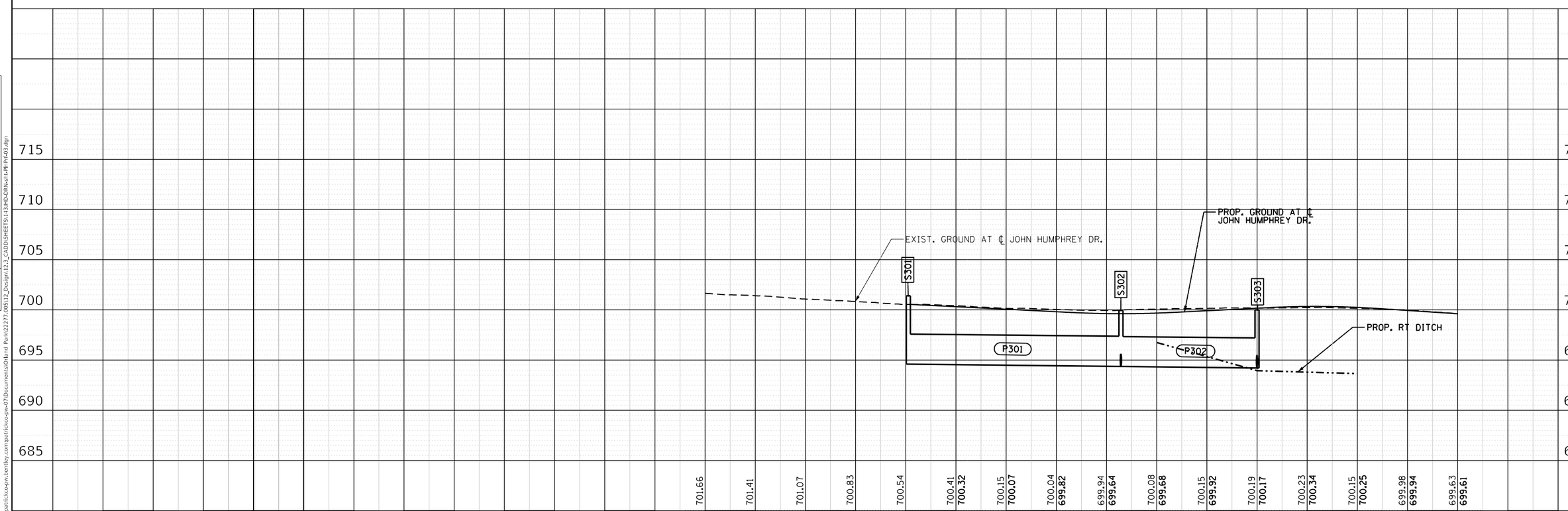

PLAN
NOTE BOOK NO.
SURVEYED
PLOTTED
ALIGNMENT CHECKED
RT. OF WAY CHECKED
CADD FILE NAME
BY
DATE

PROFILE
NOTE BOOK NO.
SURVEYED
PLOTTED
GRADES CHECKED
B.M. NOTED
STRUCTURE NOTATNS CHKD
BY
DATE

PLOT DRIVER = $PLTDRVLS
PEN TABLE = $PENTBLLS
FILE NAME = pw:\\patrickco-pw.bentley.com:patrickco-pw-07\Documents\Orland Park\22277.005\12_Design\12-3_CADD\SHEETS\1433HD-DRN-sht-PlnPrf-03.dgn

CHRISTOPHER B. BURKE ENGINEERING, LTD.
9575 W. Higgins Road, Suite 600
Rosemont, Illinois 60018
(847) 823-0500

USER NAME = xsandoval	DESIGNED - MA	REVISED -	
	DRAWN - XS	REVISED -	
PLOT SCALE = 100.0000 ' / in.	CHECKED - JOC	REVISED -	
PLOT DATE = 12/10/2024	DATE - 12/03/24	REVISED -	

STATE OF ILLINOIS
DEPARTMENT OF TRANSPORTATION

JOHN HUMPHREY DRIVE AT 143RD STREET
DRAINAGE PLAN & PROFILE

SCALE: 1" = 50' | SHEET OF SHEETS | STA. BEGIN TO STA. 498+00

F.A.U. RTE.	SECTION	COUNTY	TOTAL SHEETS	SHEET NO.
2520	16-00078-00-CH	COOK	228	69

CONTRACT NO. 61K89

ILLINOIS | FED. AID PROJECT

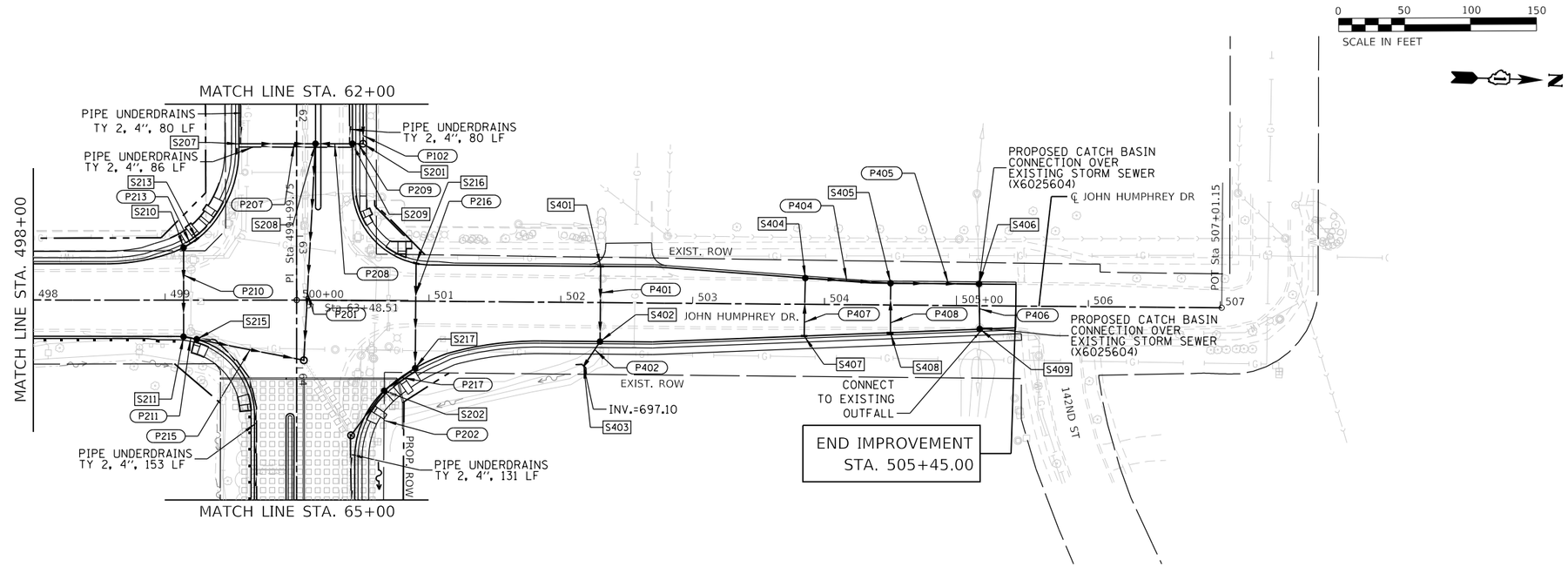

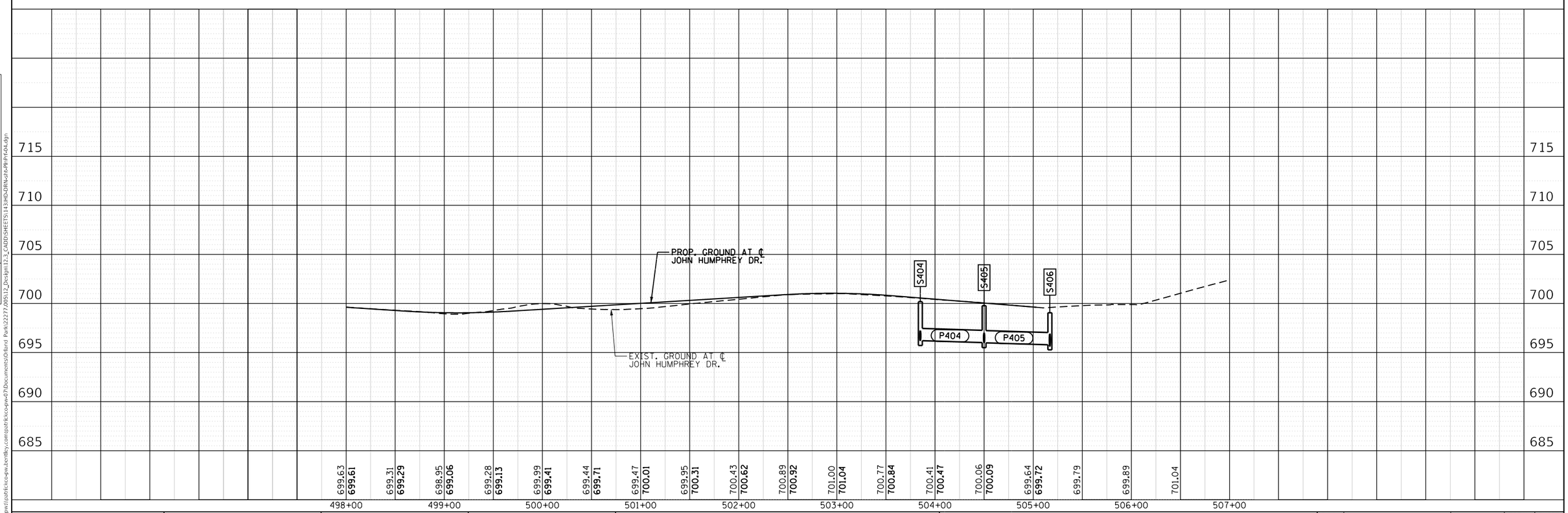

PLAN — NOTE BOOK NO. ____ — SURVEYED ____ PLOTTED ____ ALIGNMENT CHECKED ____ RT. OF WAY CHECKED ____ CADD FILE NAME ____ — BY — DATE

PROFILE — NOTE BOOK NO. ____ — SURVEYED ____ PLOTTED ____ GRADES CHECKED ____ B.M. NOTED ____ STRUCTURE NOTATNS CHKD ____ — BY — DATE

PLOT DRIVER = SPLTDRVLS
PEN TABLE = SPENTBLLS
FILE NAME = pw:\\pattrickco-pw.bentley.com:pattrickco-pw-07\Documents\Orland Park\22277.005\12_Design\12-3_CADD\SHEETS\143HD-DRN-sht-PlnPrf-04.dgn

CHRISTOPHER B. BURKE ENGINEERING, LTD.
9575 W. Higgins Road, Suite 600
Rosemont, Illinois 60018
(847) 823-0500

USER NAME = xsandoval	DESIGNED - MA	REVISED -	
	DRAWN - XS	REVISED -	
PLOT SCALE = 100.0000 ' / in.	CHECKED - JOC	REVISED -	
PLOT DATE = 12/10/2024	DATE - 12/03/24	REVISED -	

STATE OF ILLINOIS
DEPARTMENT OF TRANSPORTATION

JOHN HUMPHREY DRIVE AT 143RD STREET
DRAINAGE PLAN & PROFILE

SCALE: 1" = 50' | SHEET OF SHEETS | STA. 498+00 TO STA. END

F.A.U. RTE.	SECTION	COUNTY	TOTAL SHEETS	SHEET NO.
2520	16-00078-00-CH	COOK	228	70

CONTRACT NO. 61K89

ILLINOIS | FED. AID PROJECT

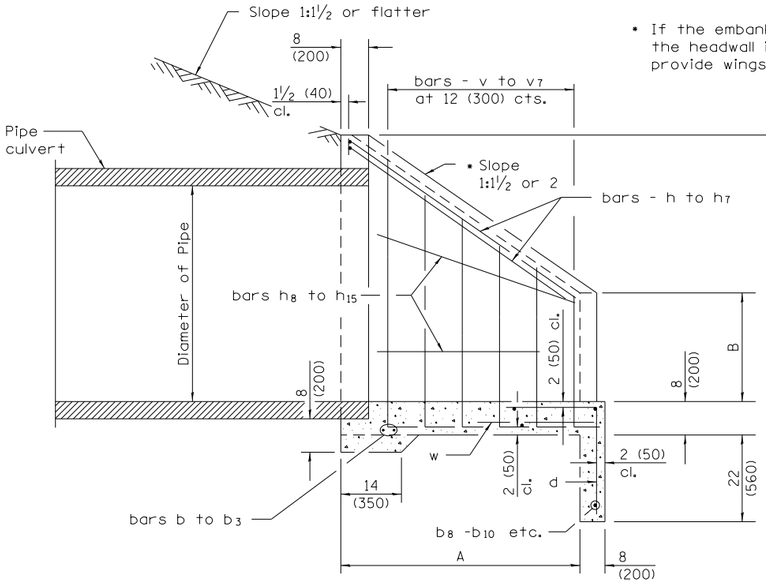

• If the embankment slope above the headwall is flatter than 1:2, provide wings for a 1:2 slope.

SECTION A–A

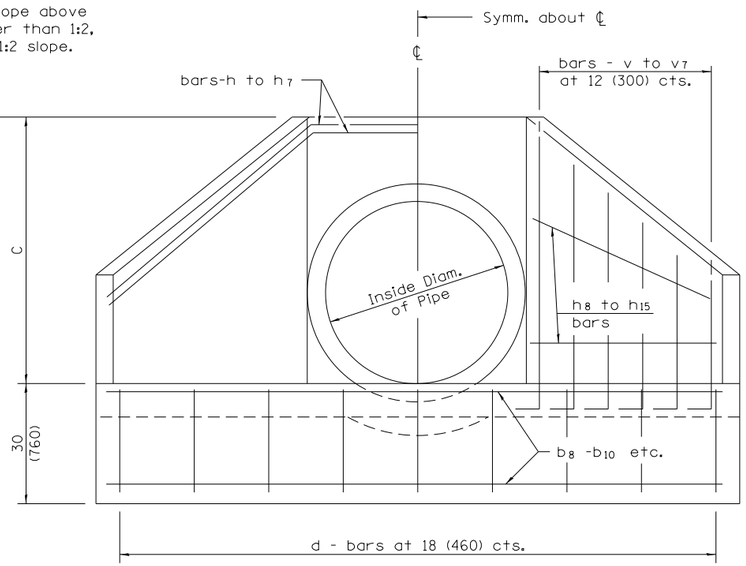

END ELEVATION

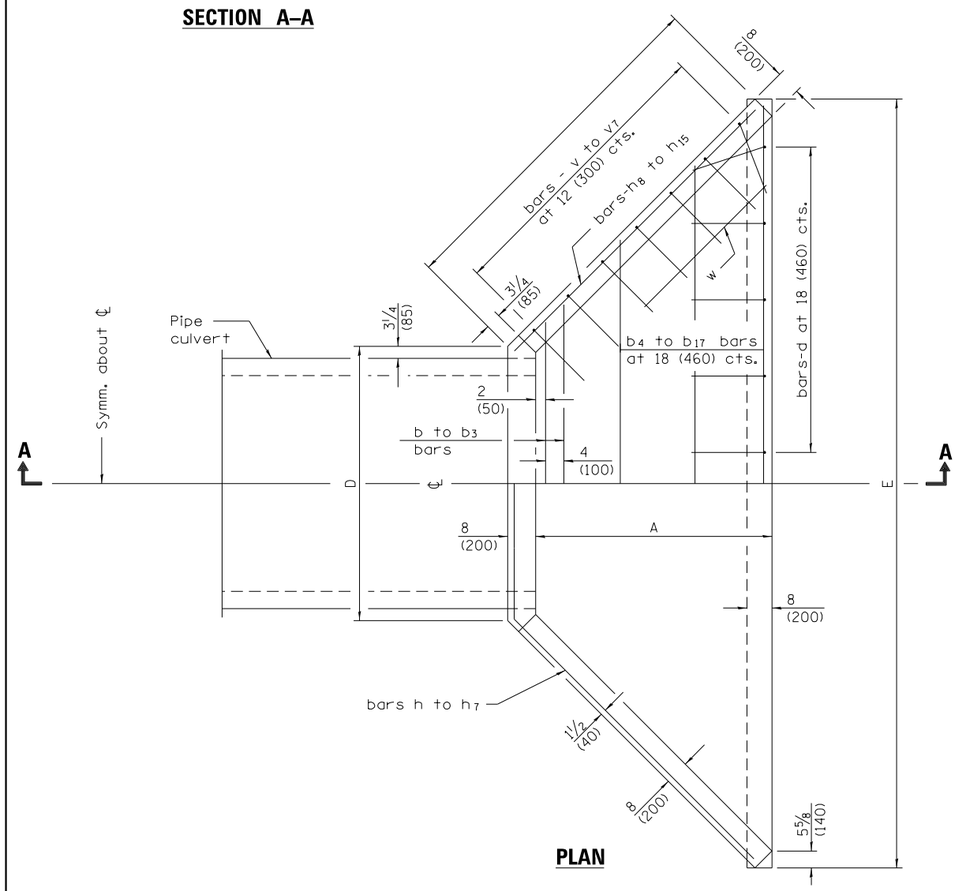

PLAN

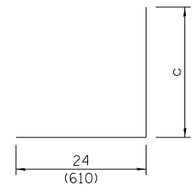

BARS – v to v7

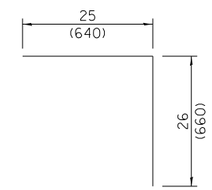

No. 4 (No. 13) BAR–d

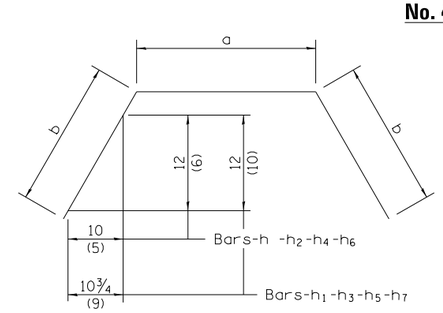

BARS – h to h7

BARS IN ONE END SECTION

60 (1500) Pipe			
D60-1½ (D1.5-1½)		D60-2 (D1.5-2)	
Bars	No.	Bars	No.
d	11	d	13
b3	2	b3	2
b7	1	b7	1
b11	1	b11	1
b14	2	b15	1
		b17	2
h6	2	h7	2
h14	4	h15	4
v	2	v	4
v1	2	v1	2
v2	2	v2	2
v3	2	v3	4
v4	2	v4	2
v5	4	v5	4
w	2	w	2

DIMENSIONS OF STRAIGHT BARS

Bar	Size	Length	Bar	Size	Length
b	No. 5 (No. 16)	6′-3″ (1.9 m)	b13	No. 4 (No. 13)	15′-0″ (4.75 m)
b1	No. 5 (No. 16)	6′-9″ (2.06 m)	b14	No. 4 (No. 13)	15′-6″ (4.72 m)
b2	No. 5 (No. 16)	7′-3″ (2.21 m)	b15	No. 4 (No. 13)	16′-6″ (5.03 m)
b3	No. 5 (No. 16)	8′-0″ (2.44 m)	b16	No. 4 (No. 13)	17′-0″ (5.18 m)
b4	No. 4 (No. 13)	8′-3″ (2.51 m)	b17	No. 4 (No. 13)	19′-0″ (5.79 m)
b5	No. 4 (No. 13)	9′-0″ (2.74 m)	h8	No. 4 (No. 13)	4′-9″ (1.45 m)
b6	No. 4 (No. 13)	10′-0″ (3.05 m)	h9	No. 4 (No. 13)	6′-3″ (1.9 m)
b7	No. 4 (No. 13)	10′-6″ (3.2 m)	h10	No. 4 (No. 13)	5′-3″ (1.6 m)
b8	No. 4 (No. 13)	11′-3″ (3.43 m)	h11	No. 4 (No. 13)	7′-3″ (2.2 m)
b9	No. 4 (No. 13)	12′-0″ (3.66 m)	h12	No. 4 (No. 13)	6′-0″ (1.83 m)
b10	No. 4 (No. 13)	13′-0″ (3.96 m)	h13	No. 4 (No. 13)	8′-0″ (2.44 m)
b11	No. 4 (No. 13)	13′-6″ (4.11 m)	h14	No. 4 (No. 13)	6′-6″ (1.98 m)
b12	No. 4 (No. 13)	14′-3″ (4.34 m)	h15	No. 4 (No. 13)	8′-9″ (2.67 m)
			w	No. 4 (No. 13)	4′-0″ (1.22 m)

DIMENSIONS OF BENT BARS

No. 5 (No. 16) - bars v to v7			No. 5 (No. 16) - bars h to h7			
BARS	c	TOTAL LENGTH	BARS	a	b	TOTAL LENGTH
v	6′-0″ (1.83 m)	8′-0″ (2.44 m)	h	4′-8″ (1.42 m)	5′-2″ (1.57 m)	15′-0″ (4.56 m)
v1	5′-6″ (1.68 m)	7′-6″ (2.29 m)	h1	4′-8″ (1.42 m)	6′-8″ (2.03 m)	18′-0″ (5.48 m)
v2	5′-0″ (1.52 m)	7′-0″ (2.13 m)	h2	5′-3″ (1.6 m)	5′-10½″ (1.79 m)	17′-0″ (5.18 m)
v3	4′-6″ (1.37 m)	6′-6″ (1.98 m)	h3	5′-3″ (1.6 m)	7′-6″ (2.29 m)	20′-3″ (6.18 m)
v4	4′-0″ (1.22 m)	6′-0″ (1.83 m)	h4	5′-10″ (1.78 m)	6′-7″ (2.01 m)	19′-0″ (5.78 m)
v5	3′-6″ (1.07 m)	5′-6″ (1.68 m)	h5	5′-10″ (1.78 m)	8′-4″ (2.54 m)	22′-6″ (6.86 m)
v6	36 (920)	5′-0″ (1.53 m)	h6	6′-5″ (1.96 m)	7′-2″ (2.18 m)	20′-9″ (6.32 m)
v7	24 (610)	4′-6″ (1.22 m)	h7	6′-5″ (1.96 m)	9′-3½″ (2.83 m)	25′-0″ (7.59 m)

DIMENSIONS AND QUANTITIES

Design No.	Nominal Inside Dia. of Pipe	Slope of Wing Walls	Dimensions A	B	C	D	E	F	Concrete 2 End Secs. cu. yds. (m^3)	Reinf. Bars 2 End Secs. lbs. (kg)
D60-2 (D1.5-2)	60 (1500)	1:2	6′-2″ (1.88 m)	35 (890)	6′-0″ (1.83 m)	6′-7″ (2.0 m)	19′-3½″ (5.88 m)	9′-0″ (2.74 m)	10.8 (8.3)	630 (285)

GENERAL NOTES

All slope ratios are expressed as units of vertical displacement to units of horizontal displacement (V:H).

All dimensions are in inches (millimeters) unless otherwise shown.

PLOT DRIVER = $PLTDRVLS
PEN TABLE = $PENTBLLS
FILE NAME = pw:\\pathtickco-pw.bentley.com:pathtickco-pw-07\Documents\Orland Park\22277.005\12_Design\12-3_CADD\SHEETS\1143\HD-DRN-Detail1.dgn

CHRISTOPHER B. BURKE ENGINEERING, LTD.
9575 W. Higgins Road, Suite 600
Rosemont, Illinois 60018
(847) 823-0500

USER NAME = dtroyer	DESIGNED -	REVISED -	
	DRAWN -	REVISED -	
PLOT SCALE = 100.0000 ' / in.	CHECKED -	REVISED -	
PLOT DATE = 12/3/2024	DATE - 12/03/24	REVISED -	

STATE OF ILLINOIS
DEPARTMENT OF TRANSPORTATION

JOHN HUMPHREY DRIVE AT 143RD STREET
DRAINAGE DETAIL

SCALE: 1" = 20' | SHEET OF SHEETS | STA. TO STA.

F.A.U RTE.	SECTION	COUNTY	TOTAL SHEETS	SHEET NO.
2520	16-00078-00-CH	COOK	228	71
		CONTRACT NO. 61K89		
		ILLINOIS	FED. AID PROJECT	

STATE OF ILLINOIS
DEPARTMENT OF TRANSPORTATION
DIVISION OF HIGHWAYS

PLAT OF HIGHWAYS

ROUTE: FAU 1600
SECTION: 16–00078–00–CH
COUNTY: COOK
LIMITS: JOHN HUMPHREY DR. AT W 143RD ST
JOB NO.: R–55–001–97

PARCEL #	OWNER	SHEET #	PROPERTY ACQUIRED BY
0001	ORLAND PARK CROSSING II, LLC, AN ILLINOIS LIMITED LIABILITY COMPANY	2	
0002 0002TE	CHICAGO TITLE LAND TRUST COMPANY SUCCESSOR TRUSTEE TO OLD NATIONAL BANK AS SUCCESSOR TO FIRST MIDWEST BANK AS SUCCESSOR TO STANDARD BANK AND TRUST COMPANY AS TRUSTEE UNDER TRUST AGREEMENT DATE SEPTEMBER 15, 1986 KNOWN AS TRUST NUMBER 10625	2	
0003	143RD ORLAND PARK PROPERTY, LLC	3	
0004	THE VILLAGE OF ORLAND PARK	3	
0005A 0005B	CHICAGO TITLE LAND TRUST COMPANY AS TRUSTEE UNDER TRUST AGREEMENT DATED NOVEMBER 30, 1976 KNOWN AS TRUST NO. 76132	2	
0006	M/I HOMES OF CHICAGO, LLC, A DELAWARE LIMITED LIABILITY COMPANY	4	
0007	CHICAGO TITLE LAND TRUST COMPANY AS TRUSTEE UNDER TRUST AGREEMENT DATED JULY 14, 2014 KNOWN AS TRUST NO. 800236374	4	
0008 0008PE	THE VILLAGE OF ORLAND PARK	3	
0009TE	BORIS O. CISNEROS	4	
0010TE	MARKLAND BARTER AND HOLLY BARTER, AS TENANTS BY THE ENTIRETY	4	

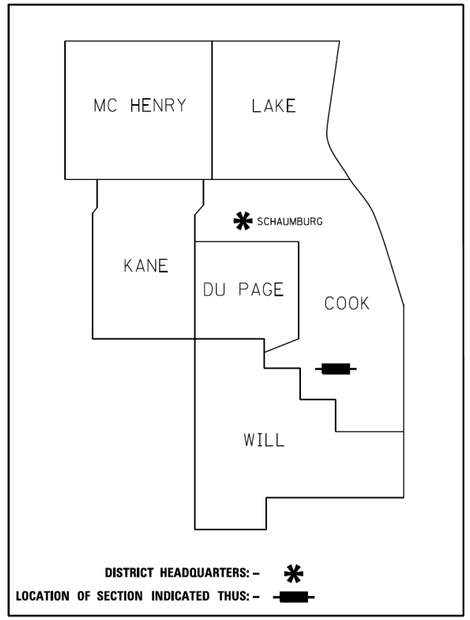

PRINTED BY THE AUTHORITY OF THE STATE OF ILLINOIS

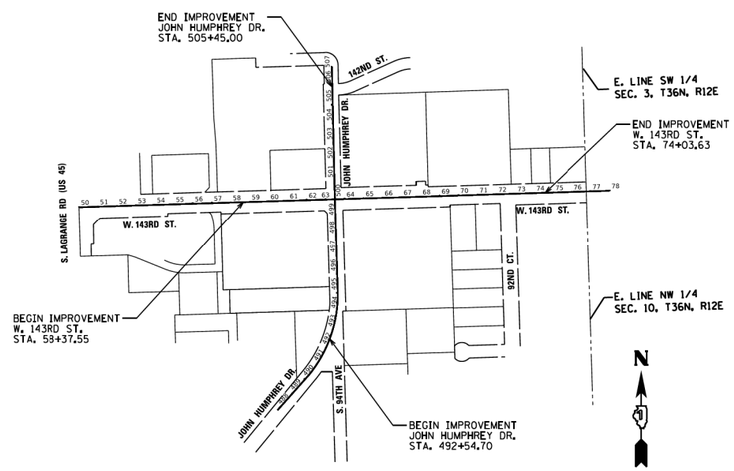

LOCATION MAP

GROSS LENGTH = 1566.08 FT. = 0.2966 MILE, W. 143RD ST
GROSS LENGTH = 1287.30 FT. = 0.2438 MILE, W. 143RD ST
NET LENGTH= 2853.38 FT. = 0.5404 MILE

RETURN ORIGINAL TO:

VILLAGE OF ORLAND PARK
14700 RAVINIA AVENUE
ORLAND PARK, IL 60462

IDOT USE ONLY

PLOT DRIVER = $PLTDRVLS
PEN TABLE = $PENTBLLS
FILE NAME = pw:\\patrickco-pw.bentley.com:patrickco-pw-07\Documents\Orland Park\22277.005\12_Design\12-3_CADD\SHEETS\143HD-sht-ROW-01.dgn

PATRICK ENGINEERING

USER NAME = dtroyer	DESIGNED –	REVISED –	STATE OF ILLINOIS DEPARTMENT OF TRANSPORTATION
	DRAWN –	REVISED –	
PLOT SCALE = 20.0000 ' / in.	CHECKED –	REVISED –	
PLOT DATE = 12/3/2024	DATE –	REVISED –	

JOHN HUMPHREY DRIVE AT 143RD STREET
ROW PLATS

SCALE: | SHEET 1 OF 4 SHEETS

F.A.U. RTE.	SECTION	COUNTY	TOTAL SHEETS	SHEET NO.
2520	16-00078-00-CH	COOK	228	72
		CONTRACT NO. 61K89		
		ILLINOIS	FED. AID PROJECT	

PART OF THE SW 1/4 OF SEC. 3 AND NW 1/4 OF SEC. 10, TWP. 36N., R. 12E. OF THE 3RD P.M., COOK COUNTY, ILLINOIS.

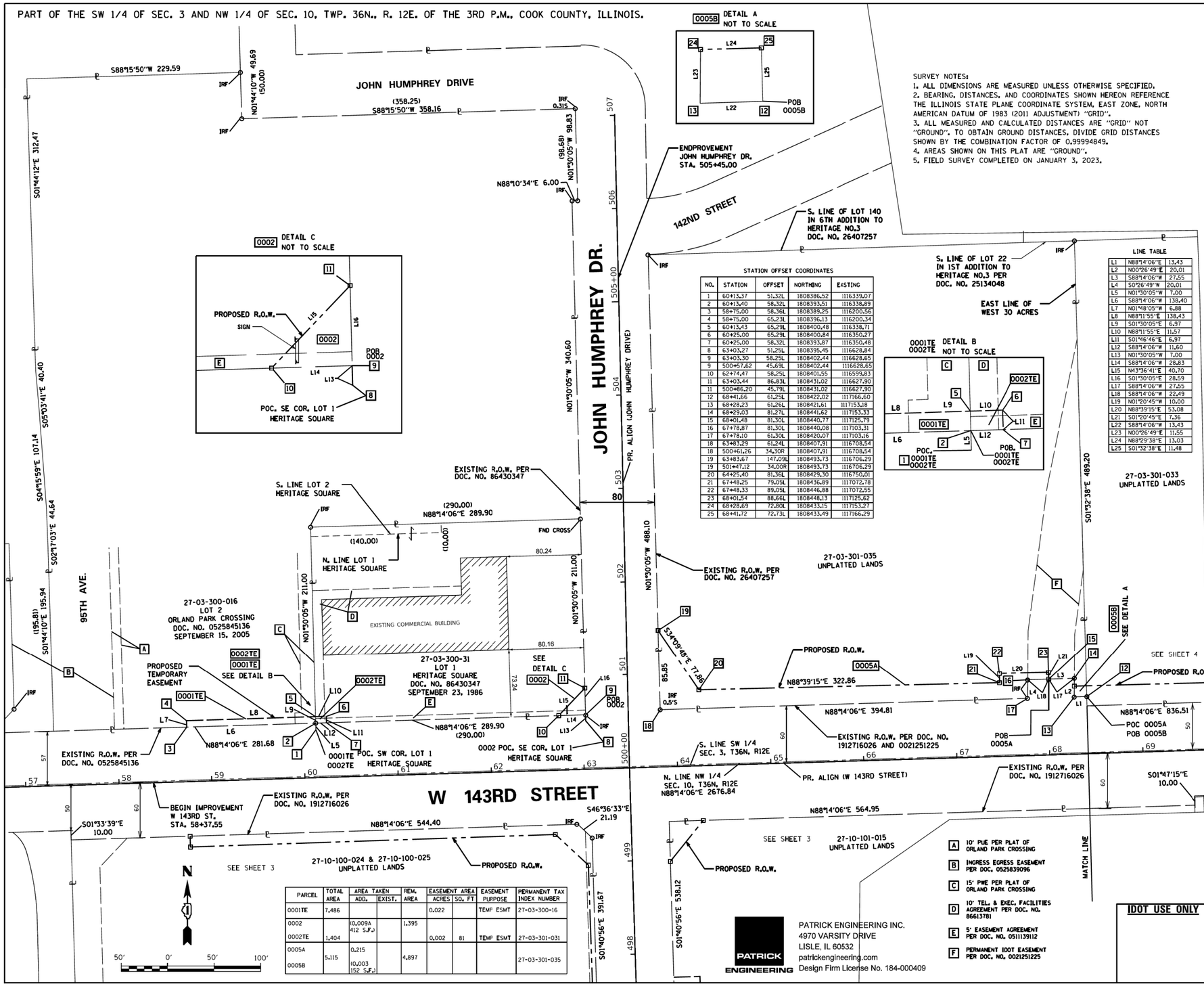

PARCEL	TOTAL AREA	AREA TAKEN ADD.	AREA TAKEN EXIST.	REM. AREA	EASEMENT AREA ACRES	EASEMENT AREA SQ. FT	EASEMENT PURPOSE	PERMANENT TAX INDEX NUMBER
0001TE	7.486				0.022		TEMP ESMT	27-03-300-16
0002		(0.009A 412 S.F.)		1.395				
0002TE	1.404				0.002	81	TEMP ESMT	27-03-301-031
0005A	5.115	0.215		4.897				27-03-301-035
0005B		(0.003 152 S.F.)						

STATION OFFSET COORDINATES

NO.	STATION	OFFSET	NORTHING	EASTING
1	60+13.37	51.32L	1808386.52	1116339.07
2	60+13.40	58.32L	1808393.51	1116338.89
3	58+75.00	58.36L	1808389.25	1116200.56
4	58+75.00	65.23L	1808396.13	1116200.34
5	60+13.43	65.29L	1808400.48	1116338.71
6	60+25.00	65.29L	1808400.84	1116350.27
7	60+25.00	58.32L	1808393.87	1116350.48
8	63+03.27	51.25L	1808395.45	1116628.84
9	63+03.30	58.25L	1808402.44	1116628.65
9	500+57.62	45.69L	1808402.44	1116628.65
10	62+74.47	58.25L	1808401.55	1116599.83
11	63+03.44	86.83L	1808431.02	1116627.90
11	500+86.20	45.79L	1808431.02	1116627.90
12	68+41.66	61.25L	1808422.02	1117166.60
13	68+28.23	61.26L	1808421.61	1117153.18
14	68+29.03	81.27L	1808441.62	1117153.33
15	68+01.48	81.30L	1808440.77	1117125.79
16	67+78.87	81.30L	1808440.08	1117103.31
17	67+78.10	61.30L	1808420.07	1117103.16
18	63+83.29	61.24L	1808407.91	1116708.54
18	500+61.26	34.30R	1808407.91	1116708.54
19	63+83.67	147.09L	1808493.73	1116706.29
19	501+47.12	34.00R	1808493.73	1116706.29
20	64+25.40	81.36L	1808429.30	1116750.01
21	67+48.25	79.05L	1808436.89	1117072.78
22	67+48.33	89.05L	1808446.88	1117072.55
23	68+01.54	88.66L	1808448.13	1117125.62
24	68+28.69	72.80L	1808433.15	1117153.27
25	68+41.72	72.73L	1808433.49	1117166.29

LINE TABLE

L1	N88°14'06"E	13.43
L2	N00°26'49"E	20.01
L3	S88°14'06"W	27.55
L4	S0°26'49"W	20.01
L5	N01°30'05"W	7.00
L6	S88°14'06"W	138.40
L7	N01°48'05"W	6.88
L8	N88°11'55"E	138.43
L9	S01°30'05"E	6.97
L10	N88°11'55"E	11.57
L11	S01°46'46"E	6.97
L12	S88°14'06"W	11.60
L13	N01°30'05"W	7.00
L14	S88°14'06"W	28.83
L15	N43°36'41"E	40.70
L16	S01°30'05"E	28.59
L17	S88°14'06"W	27.55
L18	S88°14'06"W	22.49
L19	N01°20'45"W	10.00
L20	N88°39'15"E	53.08
L21	S01°20'45"E	7.36
L22	S88°14'06"W	13.43
L23	N00°26'49"E	11.55
L24	N88°29'38"E	13.03
L25	S01°32'38"E	11.48

SURVEY NOTES:
1. ALL DIMENSIONS ARE MEASURED UNLESS OTHERWISE SPECIFIED.
2. BEARING, DISTANCES, AND COORDINATES SHOWN HEREON REFERENCE THE ILLINOIS STATE PLANE COORDINATE SYSTEM, EAST ZONE, NORTH AMERICAN DATUM OF 1983 (2011 ADJUSTMENT) "GRID".
3. ALL MEASURED AND CALCULATED DISTANCES ARE "GRID" NOT "GROUND". TO OBTAIN GROUND DISTANCES, DIVIDE GRID DISTANCES SHOWN BY THE COMBINATION FACTOR OF 0.99994849.
4. AREAS SHOWN ON THIS PLAT ARE "GROUND".
5. FIELD SURVEY COMPLETED ON JANUARY 3, 2023.

LEGEND

SECTION CORNER
QUARTER SECTION CORNER

- SECTION / QUARTER SECTION LINE
- PLATTED LOT LINES
- PROPERTY (DEED) LINE
- APPARENT PROPERTY LINE
- EXISTING CENTERLINE
- PROPOSED CENTERLINE
- EXISTING RIGHT OF WAY LINE
- PROPOSED RIGHT OF WAY LINE
- EXISTING EASEMENT
- PROPOSED EASEMENT
- EXISTING ACCESS CONTROL LINE
- PROPOSED ACCESS CONTROL LINE
- 129.32' MEASURED DIMENSION
- 129.32' (COMP) COMPUTED DIMENSION
- (129.32') RECORDED DIMENSION
- EXISTING BUILDING

- IRON PIPE OR ROD FOUND
- CUT CROSS FOUND OR SET
- "MAG" NAIL SET
- 5 / 8" REBAR SET
- STAKING OF PROPOSED RIGHT OF WAY. SET DIVISION OF HIGHWAYS SURVEY MARKER TO MONUMENT THE POSITION SHOWN. IDENTIFIED BY INSCRIPTION DATA AND SURVEYORS REGISTRATION NUMBER.
- M STAKING OF PROPOSED RIGHT OF WAY IN CULTIVATED AREAS. BURIED 5/8 INCH METAL ROD 20 INCHES BELOW GROUND TO MARK FUTURE SURVEY MARKER POSITION IDENTIFIED BY COLORED PLASTIC CAP BEARING SURVEYORS REGISTRATION NUMBER.
- PERMANENT SURVEY MARKER, I.D.O.T. STANDARD 667101.02 (TO BE SET BY OTHERS)
- RIGHT OF WAY STAKING PROPOSED TO BE SET

STATE OF ILLINOIS)
)SS
COUNTY OF DUPAGE)

THIS IS TO CERTIFY THAT I, SCOTT A. LUTZ, AN ILLINOIS PROFESSIONAL LAND SURVEYOR, (WE, PATRICK ENGINEERING INC., AN ILLINOIS PROFESSIONAL DESIGN FIRM LAND SURVEYING CORPORATION, NUMBER 184-000409, HAVE SURVEYED THE PLAT OF HIGHWAYS SHOWN HEREON IN SECTION 3 AND 10, TOWNSHIP 36 NORTH, RANGE 12 EAST OF THE THIRD PRINCIPAL MERIDIAN, COOK COUNTY, THAT THE SURVEY IS TRUE AND COMPLETE AS SHOWN TO THE BEST OF MY KNOWLEDGE AND BELIEF, THAT THE PLAT CORRECTLY REPRESENTS SAID SURVEY, THAT ALL MONUMENTS FOUND AND ESTABLISHED ARE OF PERMANENT QUALITY AND OCCUPY THE POSITIONS SHOWN THEREON AND THAT THE MONUMENTS ARE SUFFICIENT TO ENABLE THE SURVEY TO BE RETRACED, MADE FOR THE DEPARTMENT OF TRANSPORTATION, STATE OF ILLINOIS.

DATED AT LISLE, ILLINOIS THIS DAY OF 2023 A.D.

ILLINOIS PROFESSIONAL LAND SURVEYOR NO. 3511
LICENSE EXPIRATION DATE: NOVEMBER 30, 2024

THIS PROFESSIONAL SERVICE CONFORMS TO THE CURRENT ILLINOIS MINIMUM STANDARDS FOR A BOUNDARY SURVEY.

A 10' PUE PER PLAT OF ORLAND PARK CROSSING
B INGRESS EGRESS EASEMENT PER DOC. 0525839096
C 15' PWE PER PLAT OF ORLAND PARK CROSSING
D 10' TEL. & EXEC. FACILITIES AGREEMENT PER DOC. NO. 86613781
E 5' EASEMENT AGREEMENT PER DOC. NO. 0511139112
F PERMANENT IDOT EASEMENT PER DOC. NO. 0021251225

PATRICK ENGINEERING
PATRICK ENGINEERING INC.
4970 VARSITY DRIVE
LISLE, IL 60532
patrickengineering.com
Design Firm License No. 184-000409

IDOT USE ONLY

PLAT OF HIGHWAYS

STATE OF ILLINOIS
DEPARTMENT OF TRANSPORTATION
(JOHN HUMPHREY DR AT W 143RD ST)

LIMITS: AT W. 143RD ST. COUNTY: COOK
SECTION: 16-00078-00-CH JOB NO.: R-55-001-97
STA. 58+00.00 TO STA. 69+00.00
SCALE: 1" = 50' SHEET 2 OF 4 SHEETS

BUREAU OF LAND ACQUISITION
201 WEST CENTER COURT
SCHAUMBURG, ILLINOIS 60196

PLOT DRIVER = $PLTDRV$LS
PEN TABLE = $PENTBL$LS
FILE NAME = pw:\\patrickco-pw.bentley.com:patrickco-pw-07\Documents\Orland Park\22277.005\12_Design\12-3_CADD\SHEETS\143HD-sht-ROW-02.dgn

PATRICK ENGINEERING

USER NAME = dtroyer	DESIGNED -	REVISED -	
	DRAWN -	REVISED -	
PLOT SCALE = 20.0000 ' / in.	CHECKED -	REVISED -	
PLOT DATE = 12/3/2024	DATE -	REVISED -	

STATE OF ILLINOIS
DEPARTMENT OF TRANSPORTATION

JOHN HUMPHREY DRIVE AT 143RD STREET
ROW PLATS

SCALE: SHEET 2 OF 4 SHEETS

F.A.U. RTE.	SECTION	COUNTY	TOTAL SHEETS	SHEET NO.
2520	16-00078-00-CH	COOK	228	73

CONTRACT NO. 61K89
ILLINOIS FED. AID PROJECT

PART OF THE SW 1/4 OF SEC. 3 AND NW 1/4 OF SEC. 10, TWP. 36N., R. 12E. OF THE 3RD P.M., COOK COUNTY, ILLINOIS.

LEGEND

- SECTION CORNER
- QUARTER SECTION CORNER
- SECTION / QUARTER SEC. LINE
- PLATTED LOT LINES
- PROPERTY (DEED) LINE
- APL — APPARENT PROPERTY LINE
- EXISTING CENTERLINE
- PROPOSED CENTERLINE
- EXISTING RIGHT OF WAY LINE
- PROPOSED RIGHT OF WAY LINE
- EXISTING EASEMENT
- PROPOSED EASEMENT
- EXISTING ACCESS CONTROL LINE
- PROPOSED ACCESS CONTROL LINE
- 129.32' — MEASURED DIMENSION
- 129.32' (COMP) — COMPUTED DIMENSION
- (129.32') — RECORDED DIMENSION
- EXISTING BUILDING
- IRON PIPE OR ROD FOUND
- MAG NAIL SET
- CUT CROSS FOUND OR SET
- 5 / 8" REBAR SET
- STAKING OF PROPOSED RIGHT OF WAY. SET DIVISION OF HIGHWAYS SURVEY MARKER TO MONUMENT THE POSITION SHOWN. IDENTIFIED BY INSCRIPTION DATA AND SURVEYORS REGISTRATION NUMBER.
- M STAKING OF PROPOSED RIGHT OF WAY IN CULTIVATED AREAS. BURIED 5/8 INCH METAL ROD 20 INCHES BELOW GROUND TO MARK FUTURE SURVEY MARKER POSITION IDENTIFIED BY COLORED PLASTIC CAP BEARING SURVEYORS REGISTRATION NUMBER.
- PERMANENT SURVEY MARKER, I.D.O.T. STANDARD 667101.02 (TO BE SET BY OTHERS)
- RIGHT OF WAY STAKING PROPOSED TO BE SET

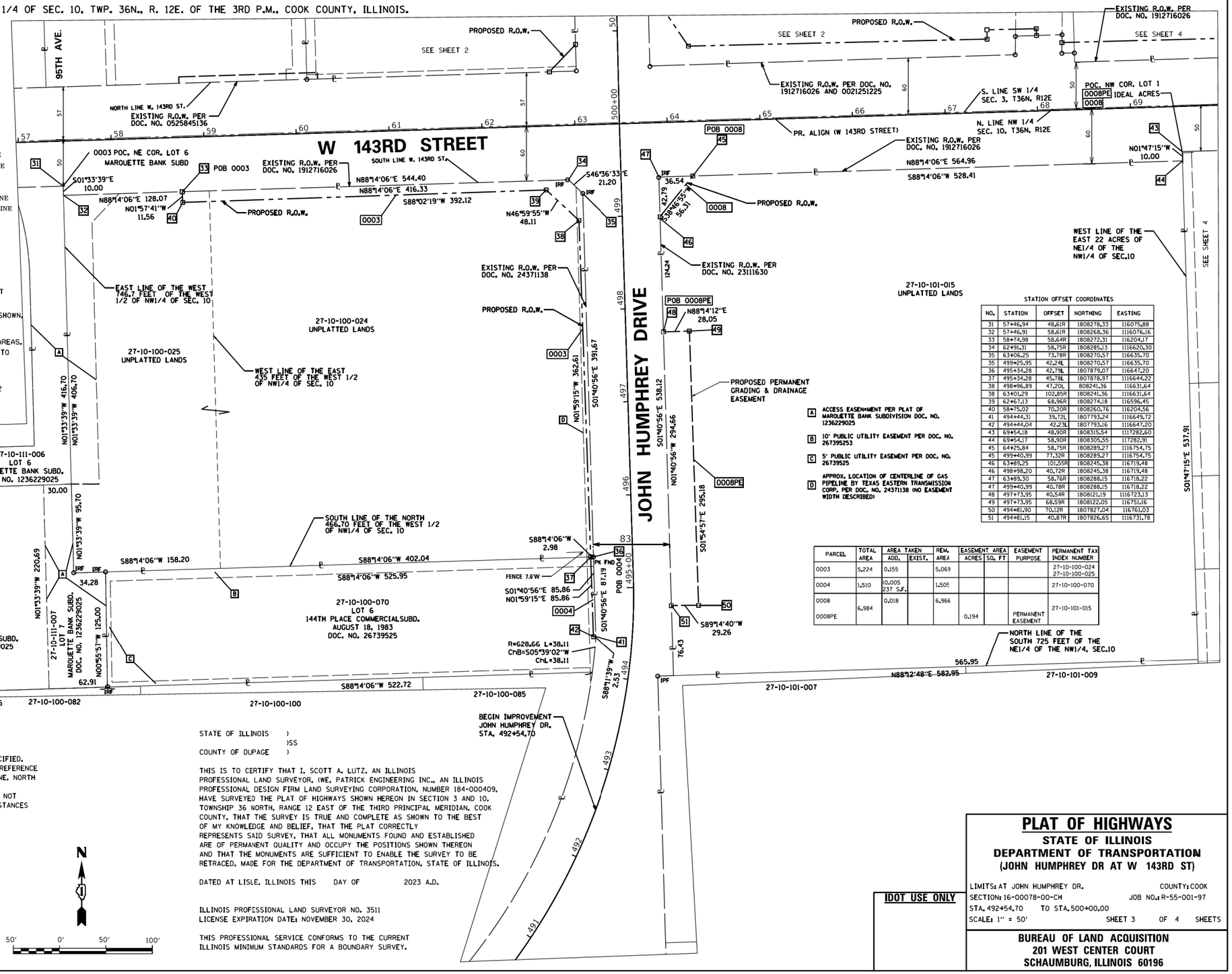

STATION OFFSET COORDINATES

NO.	STATION	OFFSET	NORTHING	EASTING
31	57+46.94	48.61R	1808278.33	1116075.88
32	57+46.91	58.61R	1808268.36	1116076.16
33	58+74.98	58.64R	1808272.31	1116204.17
34	62+91.31	58.75R	1808285.13	1116620.30
35	63+06.25	73.78R	1808270.57	1116635.70
35	499+25.95	42.24L	1808270.57	1116635.70
36	495+34.28	42.79L	1807879.07	1116647.20
37	495+34.28	45.78L	1807878.97	1116644.22
38	498+96.89	47.20L	808241.36	116631.64
38	63+01.29	102.85R	1808241.36	1116631.64
39	62+67.13	68.96R	1808274.18	116596.45
40	58+75.02	70.20R	1808260.76	116204.56
41	494+44.31	39.72L	1807793.24	1116649.72
42	494+44.04	42.23L	1807793.16	1116647.20
43	69+54.18	48.90R	1808315.54	1117282.60
44	69+54.17	58.90R	1808305.55	117282.91
45	64+25.84	58.75R	1808289.27	1116754.75
45	499+40.99	77.32R	1808289.27	1116754.75
46	63+89.25	101.55R	1808245.38	116719.48
46	498+98.20	40.72R	1808245.38	116719.48
47	63+89.30	58.76R	1808288.15	116718.22
47	499+40.99	40.78R	1808288.15	116718.22
48	497+73.95	40.54R	1808121.19	1116723.13
49	497+73.95	68.59R	1808122.05	116751.16
50	494+81.90	70.12R	1807827.04	116761.03
51	494+81.15	40.87R	1807826.65	1116731.78

PARCEL	TOTAL AREA	AREA TAKEN ADD.	AREA TAKEN EXIST.	REM. AREA	EASEMENT AREA ACRES	EASEMENT AREA SQ. FT	EASEMENT PURPOSE	PERMANENT TAX INDEX NUMBER
0003	5.224	0.155		5.069				27-10-100-024 27-10-100-025
0004	1.510	0.005 237 S.F.		1.505				27-10-100-070
0008 0008PE	6.984	0.018		6.966	0.194		PERMANENT EASEMENT	27-10-101-015

- A ACCESS EASEMENT PER PLAT OF MAROUETTE BANK SUBDIVISION DOC. NO. 1236229025
- B 10' PUBLIC UTILITY EASEMENT PER DOC. NO. 267395253
- C 5' PUBLIC UTILITY EASEMENT PER DOC. NO. 26739525
- D APPROX. LOCATION OF CENTERLINE OF GAS PIPELINE BY TEXAS EASTERN TRANSMISSION CORP. PER DOC. NO. 24371138 (NO EASEMENT WIDTH DESCRIBED)

SURVEY NOTES:
1. ALL DIMENSIONS ARE MEASURED UNLESS OTHERWISE SPECIFIED.
2. BEARING, DISTANCES, AND COORDINATES SHOWN HEREON REFERENCE THE ILLINOIS STATE PLANE COORDINATE SYSTEM, EAST ZONE, NORTH AMERICAN DATUM OF 1983 (2011 ADJUSTMENT) "GRID".
3. ALL MEASURED AND CALCULATED DISTANCES ARE "GRID" NOT "GROUND". TO OBTAIN GROUND DISTANCES, DIVIDE GRID DISTANCES SHOWN BY THE COMBINATION FACTOR OF 0.99994849.
4. AREAS SHOWN ON THIS PLAT ARE "GROUND".
5. FIELD SURVEY COMPLETED ON JANUARY 3, 2023.

STATE OF ILLINOIS)
)SS
COUNTY OF DUPAGE)

THIS IS TO CERTIFY THAT I, SCOTT A. LUTZ, AN ILLINOIS PROFESSIONAL LAND SURVEYOR, (WE, PATRICK ENGINEERING INC., AN ILLINOIS PROFESSIONAL DESIGN FIRM LAND SURVEYING CORPORATION, NUMBER 184-000409, HAVE SURVEYED THE PLAT OF HIGHWAYS SHOWN HEREON IN SECTION 3 AND 10, TOWNSHIP 36 NORTH, RANGE 12 EAST OF THE THIRD PRINCIPAL MERIDIAN, COOK COUNTY, THAT THE SURVEY IS TRUE AND COMPLETE AS SHOWN TO THE BEST OF MY KNOWLEDGE AND BELIEF, THAT THE PLAT CORRECTLY REPRESENTS SAID SURVEY, THAT ALL MONUMENTS FOUND AND ESTABLISHED ARE OF PERMANENT QUALITY AND OCCUPY THE POSITIONS SHOWN THEREON AND THAT THE MONUMENTS ARE SUFFICIENT TO ENABLE THE SURVEY TO BE RETRACED, MADE FOR THE DEPARTMENT OF TRANSPORTATION, STATE OF ILLINOIS.

DATED AT LISLE, ILLINOIS THIS DAY OF 2023 A.D.

ILLINOIS PROFESSIONAL LAND SURVEYOR NO. 3511
LICENSE EXPIRATION DATE: NOVEMBER 30, 2024

THIS PROFESSIONAL SERVICE CONFORMS TO THE CURRENT ILLINOIS MINIMUM STANDARDS FOR A BOUNDARY SURVEY.

N

50' 0' 50' 100'

PATRICK ENGINEERING
PATRICK ENGINEERING INC.
4970 VARSITY DRIVE
LISLE, IL 60532
patrickengineering.com
Design Firm License No. 184-000409

PLAT OF HIGHWAYS

STATE OF ILLINOIS
DEPARTMENT OF TRANSPORTATION
(JOHN HUMPHREY DR AT W 143RD ST)

IDOT USE ONLY

LIMITS: AT JOHN HUMPHREY DR. COUNTY: COOK
SECTION: 16-00078-00-CH JOB NO.: R-55-001-97
STA. 492+54.70 TO STA. 500+00.00
SCALE: 1" = 50' SHEET 3 OF 4 SHEETS

BUREAU OF LAND ACQUISITION
201 WEST CENTER COURT
SCHAUMBURG, ILLINOIS 60196

PLOT DRIVER = $PLTDRVL$
PEN TABLE = $PENTBLL$
FILE NAME = pw://patrickco-pw.bentley.com:patrickco-pw-07/Documents/Other and Park\22277.005\12_Design\12.3_CADD\SHEETS\143HD-sht-ROW-03.dgn

USER NAME = dtroyer	DESIGNED -	REVISED -	
	DRAWN -	REVISED -	
PLOT SCALE = 20.0000 ' / in.	CHECKED -	REVISED -	
PLOT DATE = 12/3/2024	DATE -	REVISED -	

PATRICK ENGINEERING

STATE OF ILLINOIS
DEPARTMENT OF TRANSPORTATION

JOHN HUMPHREY DRIVE AT 143RD STREET
ROW PLATS

SCALE: SHEET 3 OF 4 SHEETS

F.A.U. RTE.	SECTION	COUNTY	TOTAL SHEETS	SHEET NO.
2520	16-00078-00-CH	COOK	228	74

CONTRACT NO. 61K89

ILLINOIS FED. AID PROJECT

PART OF THE SW 1/4 OF SEC. 3 AND NW 1/4 OF SEC. 10, TWP. 36N., R. 12E. OF THE 3RD P.M., COOK COUNTY, ILLINOIS.

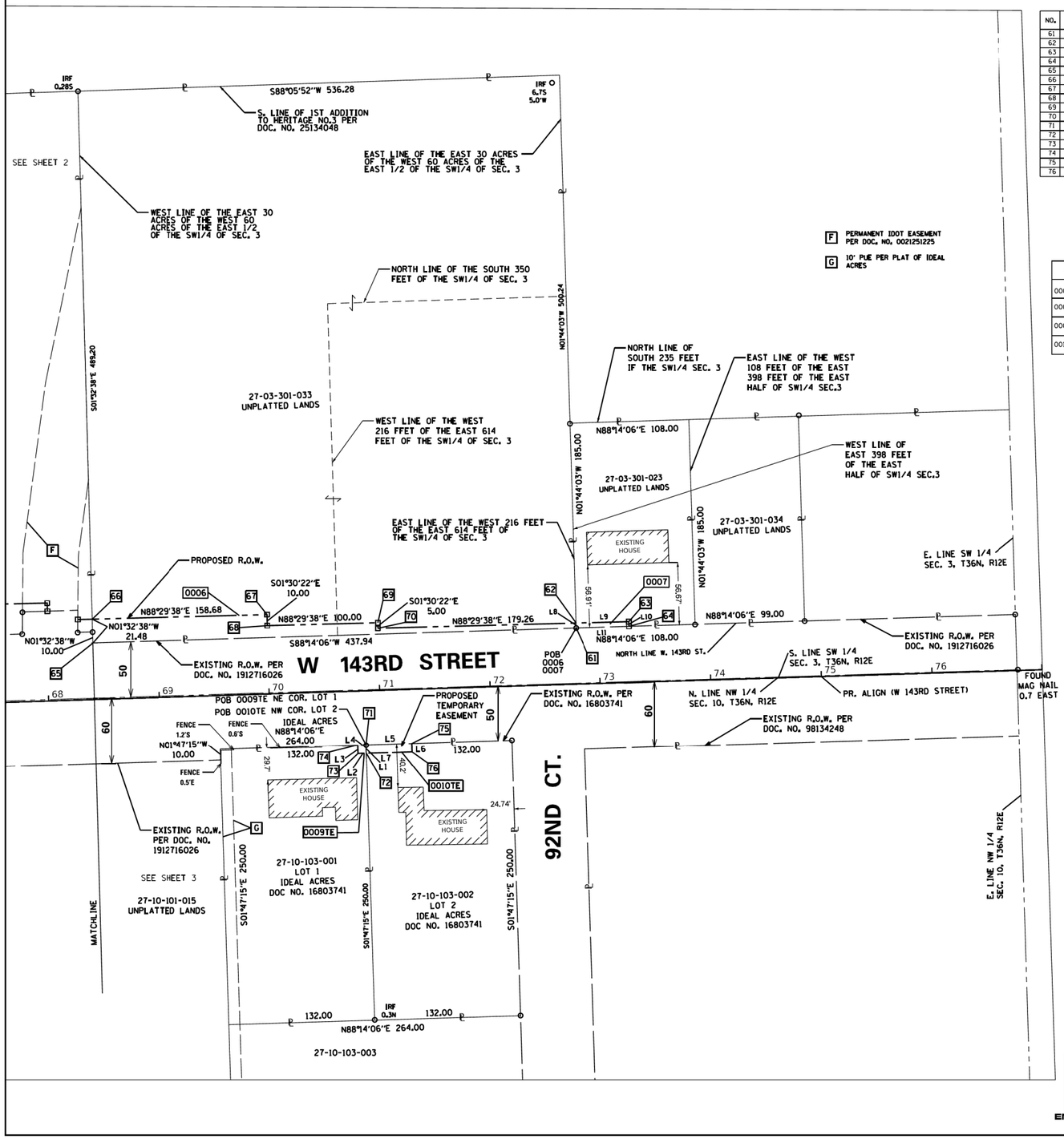

STATION OFFSET COORDINATES

NO.	STATION	OFFSET	NORTHING	EASTING
61	72+79.49	50.75L	1808425.51	1117604.60
62	72+79.50	55.25L	1808430.01	1117604.46
63	73+27.74	55.02L	1808431.28	1117652.70
64	73+27.72	50.74L	1808427.00	1117652.81
65	68+41.61	51.25L	1808412.02	1117166.87
66	68+41.72	72.73L	1808433.49	1117166.29
67	70+00.40	71.80L	1808437.67	1117324.91
68	70+00.34	61.80L	1808427.67	1117325.18
69	71+00.33	61.21L	1808430.30	1117425.14
70	71+00.31	56.21L	1808425.30	1117425.27
71	70+86.18	49.08R	1808319.61	1117414.54
72	70+86.17	56.95R	1808311.74	1117414.78
73	70+78.62	56.92R	1808311.53	1117407.24
74	70+78.65	49.07R	1808319.38	1117407.01
75	71+27.59	49.13R	1808320.88	1117455.93
76	71+27.56	57.11R	1808312.91	1117456.15

LINE TABLE

L1	S01°47'15"E 7.87
L2	S88°23'09"W 7.55
L3	N01°36'51"W 7.85
L4	N88°14'06"E 7.53
L5	N88°14'06"E 41.41
L6	S01°56'51"E 7.38
L7	S88°23'09"W 41.39
L8	N01°44'03"W 4.50
L9	N88°29'38"E 48.25
L10	S01°30'22"E 4.28
L11	S88°14'06"W 48.23

PARCEL	TOTAL AREA	AREA TAKEN ADD.	AREA TAKEN EXIST.	REM. AREA	EASEMENT AREA ACRES	EASEMENT AREA SQ. FT	EASEMENT PURPOSE	PERMANENT TAX INDEX NUMBER
0007	0.459	(0.005A-212 S.F.)		0.453				27-03-301-023
0006	5.028	0.121		4.907				27-03-301-033
0009TE	0.578				0.001	59	TEMP ESMT	27-10-103-001
0010TE	0.578				0.008	328	TEMP ESMT	27-10-103-002

LEGEND

SECTION CORNER

16 15 QUARTER SECTION CORNER

- SECTION / QUARTER SECTION LINE
- PLATTED LOT LINES
- PROPERTY (DEED) LINE
- APL APPARENT PROPERTY LINE
- EXISTING CENTERLINE
- PROPOSED CENTERLINE
- EXISTING RIGHT OF WAY LINE
- PROPOSED RIGHT OF WAY LINE
- EXISTING EASEMENT
- PROPOSED EASEMENT
- EXISTING ACCESS CONTROL LINE
- PROPOSED ACCESS CONTROL LINE
- 129.32' MEASURED DIMENSION
- 129.32' (COMP) COMPUTED DIMENSION
- (129.32') RECORDED DIMENSION
- EXISTING BUILDING
- IRON PIPE OR ROD FOUND
- "MAG" NAIL SET
- CUT CROSS FOUND OR SET
- 5 / 8" REBAR SET
- STAKING OF PROPOSED RIGHT OF WAY. SET DIVISION OF HIGHWAYS SURVEY MARKER TO MONUMENT THE POSITION SHOWN. IDENTIFIED BY INSCRIPTION DATA AND SURVEYORS REGISTRATION NUMBER.
- M STAKING OF PROPOSED RIGHT OF WAY IN CULTIVATED AREAS. BURIED 5/8 INCH METAL ROD 20 INCHES BELOW GROUND TO MARK FUTURE SURVEY MARKER POSITION IDENTIFIED BY COLORED PLASTIC CAP BEARING SURVEYORS REGISTRATION NUMBER.
- PERMANENT SURVEY MARKER, I.D.O.T. STANDARD 667101.02 (TO BE SET BY OTHERS)
- RIGHT OF WAY STAKING PROPOSED TO BE SET

SURVEY NOTES:
1. ALL DIMENSIONS ARE MEASURED UNLESS OTHERWISE SPECIFIED.
2. BEARING, DISTANCES, AND COORDINATES SHOWN HEREON REFERENCE THE ILLINOIS STATE PLANE COORDINATE SYSTEM, EAST ZONE, NORTH AMERICAN DATUM OF 1983 (2011 ADJUSTMENT) "GRID".
3. ALL MEASURED AND CALCULATED DISTANCES ARE "GRID" NOT "GROUND". TO OBTAIN GROUND DISTANCES, DIVIDE GRID DISTANCES SHOWN BY THE COMBINATION FACTOR OF 0.99994849.
4. AREAS SHOWN ON THIS PLAT ARE "GROUND".
5. FIELD SURVEY COMPLETED ON JANUARY 3, 2023.

STATE OF ILLINOIS)
)SS
COUNTY OF DUPAGE)

THIS IS TO CERTIFY THAT I, SCOTT A. LUTZ, AN ILLINOIS PROFESSIONAL LAND SURVEYOR, (WE, PATRICK ENGINEERING INC., AN ILLINOIS PROFESSIONAL DESIGN FIRM LAND SURVEYING CORPORATION, NUMBER 184-000409, HAVE SURVEYED THE PLAT OF HIGHWAYS SHOWN HEREON IN SECTION 3 AND 10, TOWNSHIP 36 NORTH, RANGE 12 EAST OF THE THIRD PRINCIPAL MERIDIAN, COOK COUNTY, THAT THE SURVEY IS TRUE AND COMPLETE AS SHOWN TO THE BEST OF MY KNOWLEDGE AND BELIEF. THAT THE PLAT CORRECTLY REPRESENTS SAID SURVEY, THAT ALL MONUMENTS FOUND AND ESTABLISHED ARE OF PERMANENT QUALITY AND OCCUPY THE POSITIONS SHOWN THEREON AND THAT THE MONUMENTS ARE SUFFICIENT TO ENABLE THE SURVEY TO BE RETRACED, MADE FOR THE DEPARTMENT OF TRANSPORTATION, STATE OF ILLINOIS.

DATED AT LISLE, ILLINOIS THIS DAY OF 2023 A.D.

ILLINOIS PROFESSIONAL LAND SURVEYOR NO. 3511
LICENSE EXPIRATION DATE: NOVEMBER 30, 2024

THIS PROFESSIONAL SERVICE CONFORMS TO THE CURRENT ILLINOIS MINIMUM STANDARDS FOR A BOUNDARY SURVEY.

N

50' 0' 50' 100'

PATRICK ENGINEERING

PATRICK ENGINEERING INC.
4970 VARSITY DRIVE
LISLE, IL 60532
patrickengineering.com
Design Firm License No. 184-000409

IDOT USE ONLY

PLAT OF HIGHWAYS

STATE OF ILLINOIS
DEPARTMENT OF TRANSPORTATION
(JOHN HUMPHREY DR AT W 143RD ST)

LIMITS: W. 143RD ST. COUNTY: COOK
SECTION: 16-00078-00-CH JOB NO.: R-55-001-97
STA. 69+00.00 TO STA. 74+03.63
SCALE: 1" = 50' SHEET 4 OF 4 SHEETS

BUREAU OF LAND ACQUISITION
201 WEST CENTER COURT
SCHAUMBURG, ILLINOIS 60196

PLOT DRIVER = $PLTDRV1S
PEN TABLE = $PENTBLLS
FILE NAME = pw:\\patrickco-pw.bentley.com:patrickco-pw-07\Documents\Orland Park\22277.005\12_Design\12.3_CADD\SHEETS\143HUD-sh-ROW-04.dgn

PATRICK ENGINEERING

USER NAME = dtroyer	DESIGNED -	REVISED -	
	DRAWN -	REVISED -	
PLOT SCALE = 20.0000 ' / in.	CHECKED -	REVISED -	
PLOT DATE = 12/3/2024	DATE -	REVISED -	

STATE OF ILLINOIS
DEPARTMENT OF TRANSPORTATION

JOHN HUMPHREY DRIVE AT 143RD STREET
ROW PLATS

SCALE: SHEET 4 OF 4 SHEETS

F.A.U. RTE.	SECTION	COUNTY	TOTAL SHEETS	SHEET NO.
2520	16-00078-00-CH	COOK	228	75

CONTRACT NO. 61K89
ILLINOIS FED. AID PROJECT

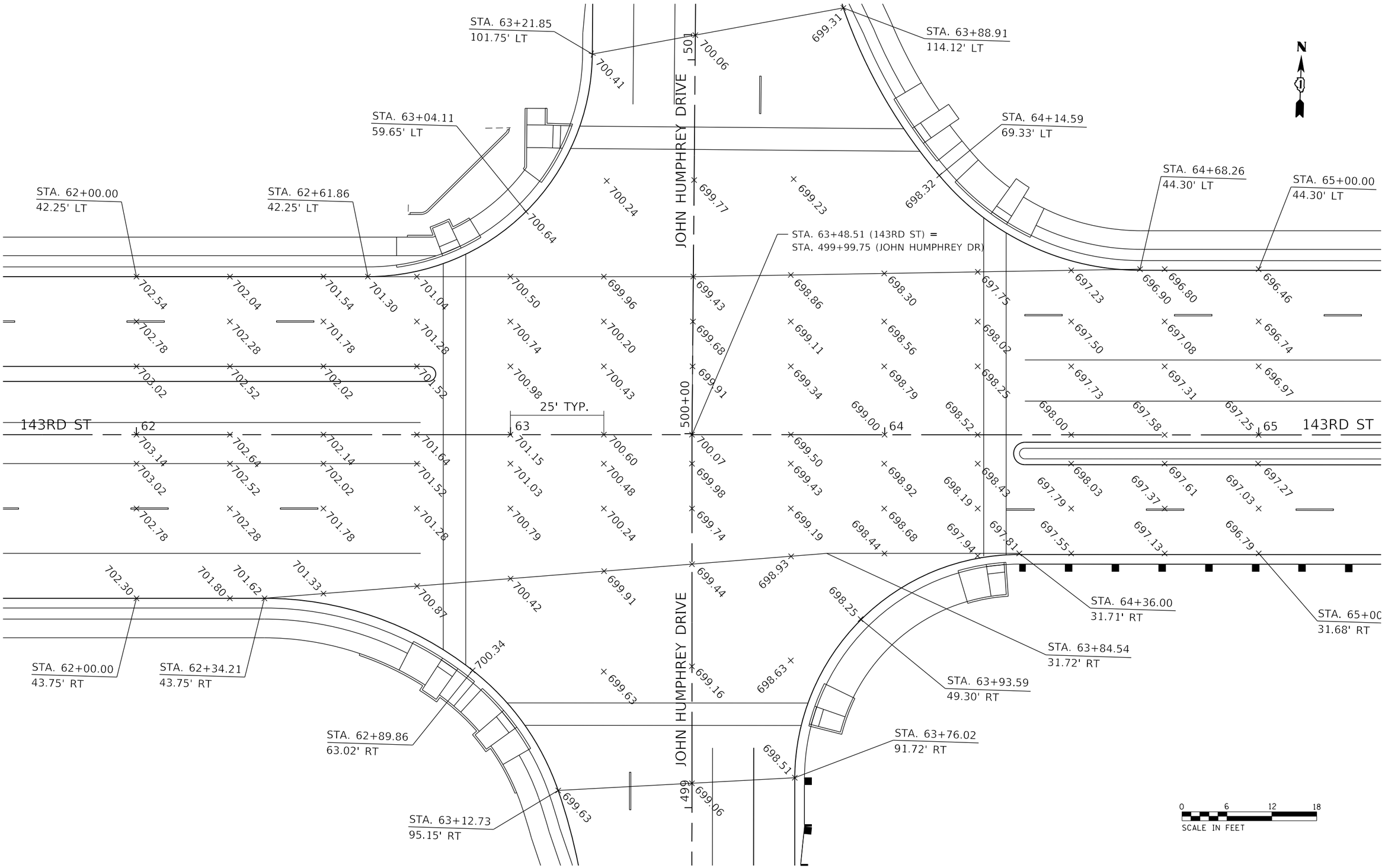

PLOT DRIVER = $PLTDRV$LS
PEN TABLE = $PENTBL$LS
FILE NAME = pw:\\patrickco-pw.bentley.com:patrickco-pw-07\Documents\Orland Park\22277.005\12_Design\12-3_CADD\SHEETS\143HD-int-interDetail-01.dgn

PATRICK ENGINEERING

USER NAME = dtroyer	DESIGNED -	REVISED -	
	DRAWN -	REVISED -	
PLOT SCALE = 24.0000 ' / in.	CHECKED -	REVISED -	
PLOT DATE = 12/3/2024	DATE - 12/03/24	REVISED -	

STATE OF ILLINOIS
DEPARTMENT OF TRANSPORTATION

JOHN HUMPHREY DRIVE AT 143RD STREET
INTERSECTION DETAILS

SCALE: 1" = 12' | SHEET OF SHEETS | STA. TO STA.

F.A.U. RTE.	SECTION	COUNTY	TOTAL SHEETS	SHEET NO.
2520	16-00078-00-CH	COOK	228	76
		CONTRACT NO. 61K89		
	ILLINOIS	FED. AID PROJECT		

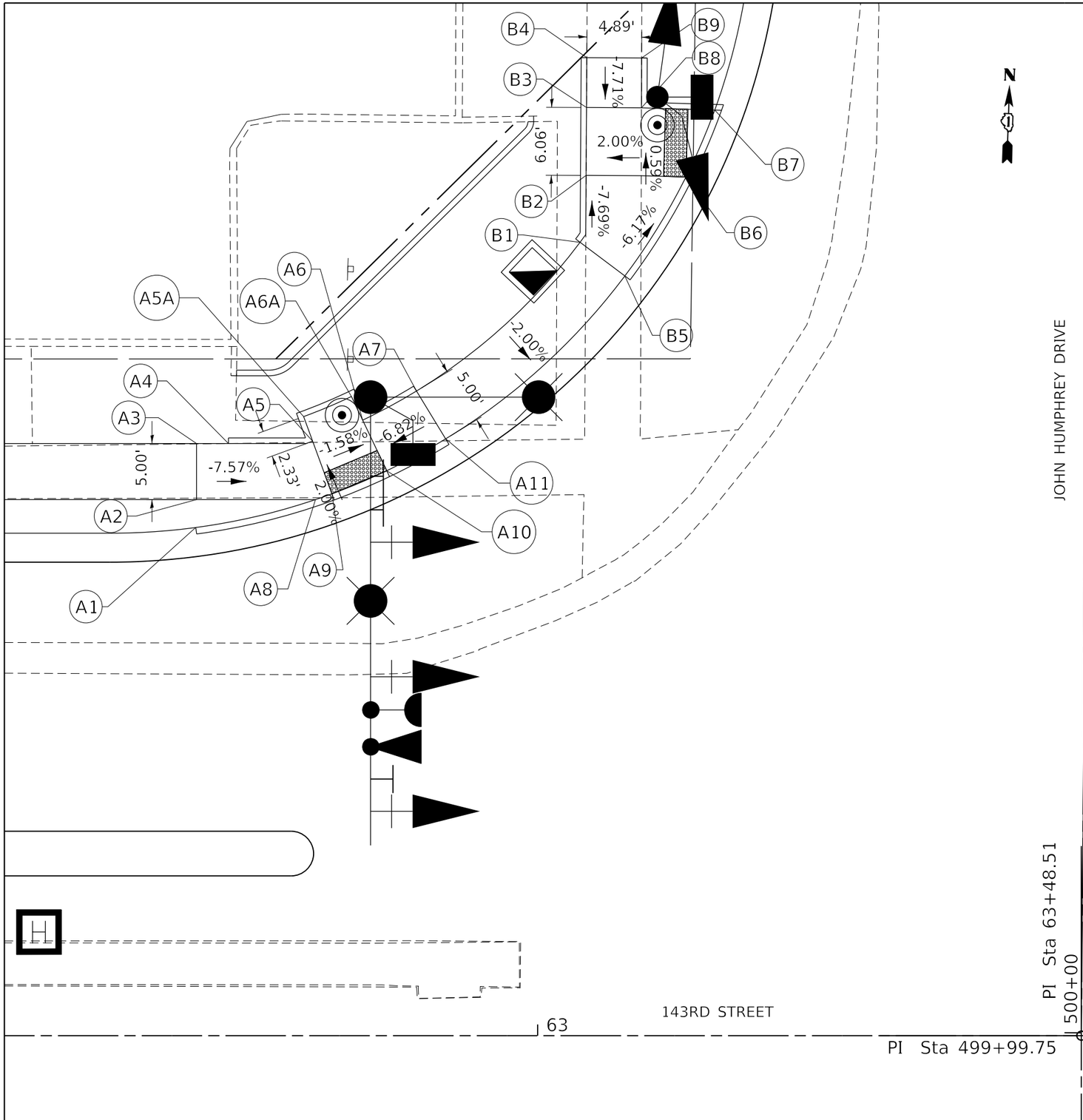

℄ 143RD STREET

	STATION	OFFSET	LT/RT	ELEVATION
A1	62+69.49	45.34	LT	701.50
A2	62+69.56	47.83	LT	701.57
A3	62+69.56	52.83	LT	701.61
A4	62+72.40	52.83	LT	701.38
A5	62+79.92	53.04	LT	700.80
A5A	62+79.12	55.23	LT	700.83
A6	62+84.39	54.92	LT	700.72
A6A	62+83.38	57.02	LT	700.75
A7	62+89.19	57.52	LT	701.11
A8	62+80.17	47.83	LT	700.79
A9	62+81.64	48.35	LT	700.70
A10	62+86.53	50.41	LT	700.62
A11	62+91.79	53.26	LT	701.01

℄ JOHN HUMPHREY DRIVE

	STATION	OFFSET	LT/RT	ELEVATION
B1	500+70.16	45.32	LT	701.07
B2	500+76.14	44.82	LT	700.60
B3	500+82.20	44.84	LT	700.60
B4	500+86.65	44.85	LT	700.99
B5	500+67.19	41.29	LT	700.97
B6	500+76.06	35.92	LT	700.42
B7	500+82.06	33.40	LT	700.41
B8	500+82.21	39.94	LT	700.54
B9	500+86.66	39.96	LT	700.88

PLOT DRIVER = $PLTDRV$LS
PEN TABLE = $PENTBLLS
FILE NAME = pw:\\patrickco-pw.bentley.com:patrickco-pw-07\Documents\Orland Park\22277.005\12_Design\12-3_CADD\SHEETS\143HD-sht-ADA-01.dgn

PATRICK ENGINEERING

USER NAME = dtroyer	DESIGNED -	REVISED -	
	DRAWN -	REVISED -	
PLOT SCALE = 10.0000 ' / in.	CHECKED -	REVISED -	
PLOT DATE = 12/3/2024	DATE - 12/03/24	REVISED -	

STATE OF ILLINOIS
DEPARTMENT OF TRANSPORTATION

JOHN HUMPHREY DRIVE AT 143RD STREET
ADA PLANS

SCALE: 1" = 10' | SHEET OF SHEETS | STA. TO STA.

F.A.U. RTE.	SECTION	COUNTY	TOTAL SHEETS	SHEET NO.
2520	16-00078-00-CH	COOK	228	77

CONTRACT NO. 61K89

ILLINOIS | FED. AID PROJECT

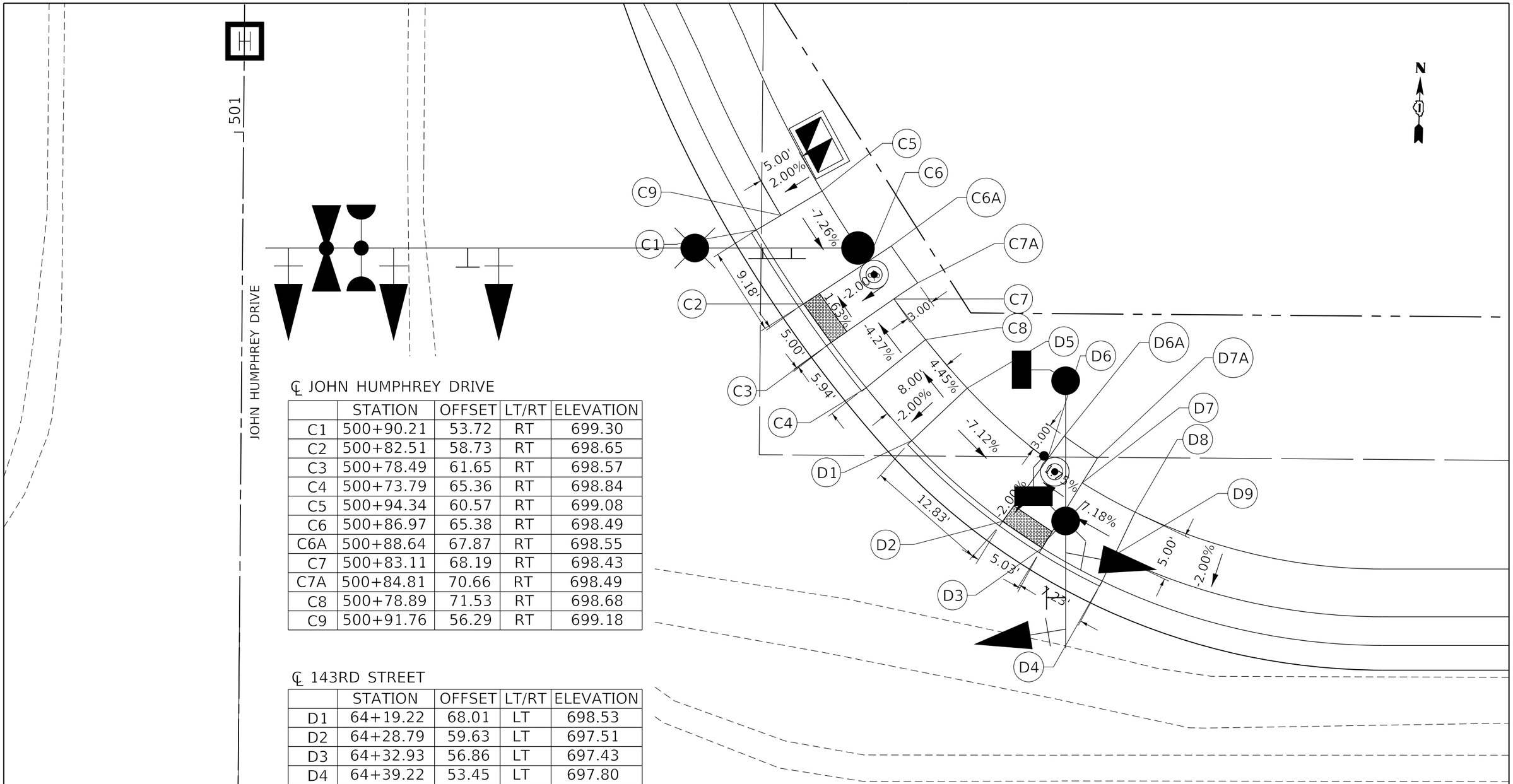

℄ JOHN HUMPHREY DRIVE

	STATION	OFFSET	LT/RT	ELEVATION
C1	500+90.21	53.72	RT	699.30
C2	500+82.51	58.73	RT	698.65
C3	500+78.49	61.65	RT	698.57
C4	500+73.79	65.36	RT	698.84
C5	500+94.34	60.57	RT	699.08
C6	500+86.97	65.38	RT	698.49
C6A	500+88.64	67.87	RT	698.55
C7	500+83.11	68.19	RT	698.43
C7A	500+84.81	70.66	RT	698.49
C8	500+78.89	71.53	RT	698.68
C9	500+91.76	56.29	RT	699.18

℄ 143RD STREET

	STATION	OFFSET	LT/RT	ELEVATION
D1	64+19.22	68.01	LT	698.53
D2	64+28.79	59.63	LT	697.51
D3	64+32.93	56.86	LT	697.43
D4	64+39.22	53.45	LT	697.80
D5	64+25.04	73.50	LT	698.37
D6	64+33.47	66.11	LT	697.67
D6A	64+35.17	68.45	LT	697.73
D7	64+37.12	63.68	LT	697.59
D7A	64+38.63	66.10	LT	697.65
D8	64+42.66	60.67	LT	698.02
D9	64+40.51	56.15	LT	697.92

PLOT DRIVER = $PLTDRVLS
PEN TABLE = $PENTBLLS
FILE NAME = pw:\\patrickco-pw.bentley.com:patrickco-pw-07\Documents\Orland Park\22277.005\12_Design\12-3_CADD\SHEETS\143HD-sht-ADA-02.dgn

PATRICK ENGINEERING

USER NAME = dtroyer	DESIGNED -	REVISED -	
	DRAWN -	REVISED -	
PLOT SCALE = 10.0000 ' / in.	CHECKED -	REVISED -	
PLOT DATE = 12/3/2024	DATE - 12/03/24	REVISED -	

STATE OF ILLINOIS
DEPARTMENT OF TRANSPORTATION

JOHN HUMPHREY DRIVE AT 143RD STREET
ADA PLANS

SCALE: 1" = 10' | SHEET OF SHEETS | STA. TO STA.

F.A.U. RTE.	SECTION	COUNTY	TOTAL SHEETS	SHEET NO.
2520	16-00078-00-CH	COOK	228	78

CONTRACT NO. 61K89

ILLINOIS | FED. AID PROJECT

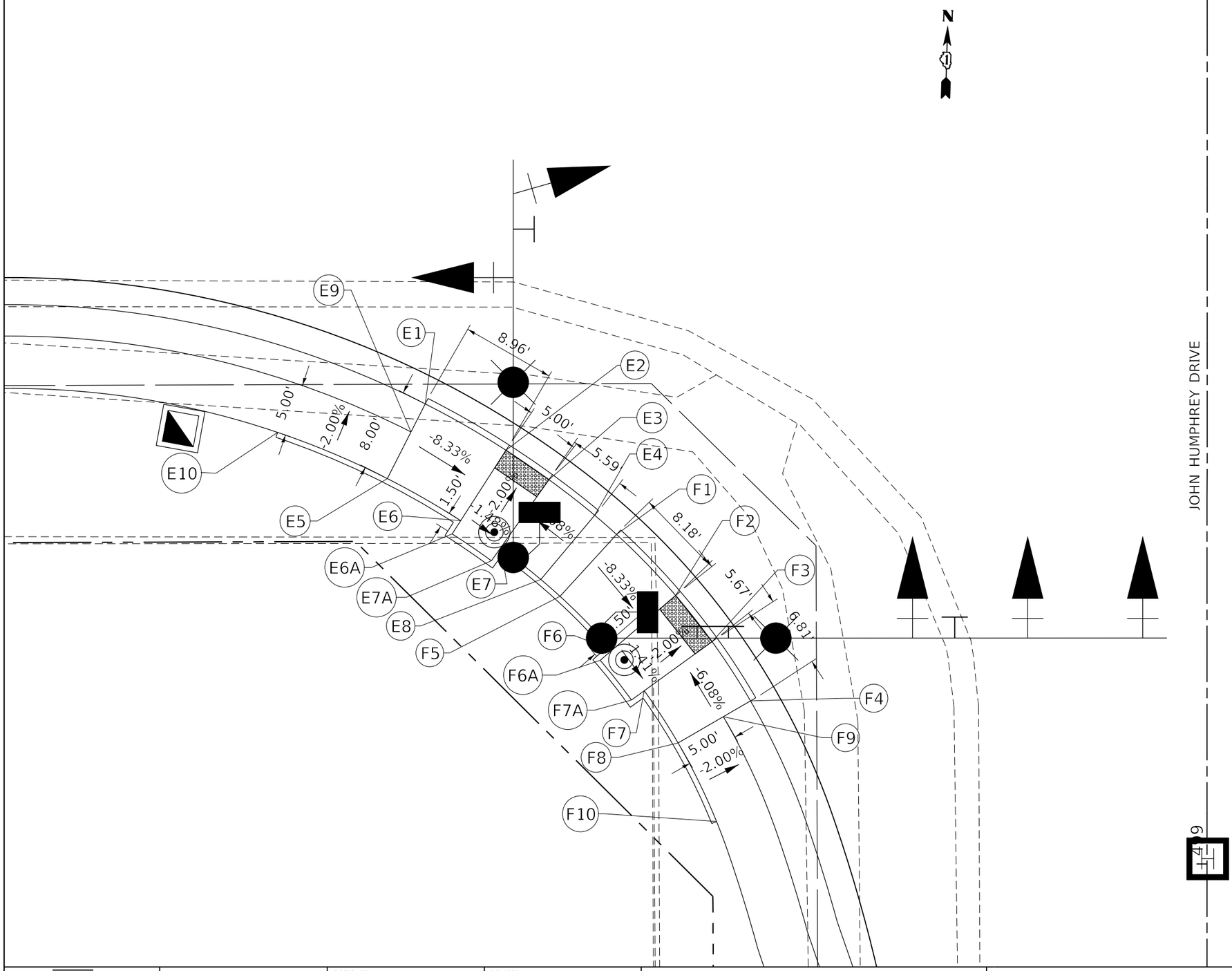

℄ 143RD STREET

	STATION	OFFSET	LT/RT	ELEVATION
E1	62+73.80	55.81	RT	701.05
E2	62+81.52	60.24	RT	700.35
E3	62+85.62	63.05	RT	700.28
E4	62+89.99	66.45	RT	700.67
E5	62+70.17	62.94	RT	701.27
E6	62+77.19	66.97	RT	700.51
E6A	62+76.38	68.23	RT	700.54
E7	62+80.98	69.57	RT	700.45
E7A	62+80.12	70.79	RT	700.48
E8	62+84.84	72.57	RT	700.83
E9	62+72.44	58.49	RT	701.17
E10	62+59.69	58.53	RT	701.56

℄ JOHN HUMPHREY DRIVE

	STATION	OFFSET	LT/RT	ELEVATION
F1	499+31.45	56.42	LT	700.60
F2	499+25.63	50.77	LT	699.93
F3	499+21.21	47.29	LT	699.86
F4	499+15.55	43.61	LT	700.24
F5	499+25.55	61.82	LT	700.76
F6	499+20.41	56.84	LT	700.09
F6A	499+19.44	57.98	LT	700.12
F7	499+16.52	53.77	LT	700.02
F7A	499+15.64	54.99	LT	700.05
F8	499+11.53	50.53	LT	700.40
F9	499+14.05	46.20	LT	700.30
F10	499+04.04	46.85	LT	700.29

PLOT DRIVER = $PLTDRVLS
PEN TABLE = $PENTBLLS
FILE NAME = pw:\\patrickcc-pw.bentley.com:patrickcc-pw-07\Documents\Orland Park\22277.005\12_Design\12-3_CADD\SHEETS\143HD-Int-ADA-03.dgn

PATRICK ENGINEERING

USER NAME = dtroyer	DESIGNED -	REVISED -	
	DRAWN -	REVISED -	
PLOT SCALE = 10.0000 ' / in.	CHECKED -	REVISED -	
PLOT DATE = 12/3/2024	DATE - 12/03/24	REVISED -	

STATE OF ILLINOIS
DEPARTMENT OF TRANSPORTATION

JOHN HUMPHREY DRIVE AT 143RD STREET
ADA PLANS

SCALE: 1" = 10' | SHEET OF SHEETS | STA. TO STA.

F.A.U. RTE.	SECTION	COUNTY	TOTAL SHEETS	SHEET NO.
2520	16-00078-00-CH	COOK	228	79

CONTRACT NO. 61K89

ILLINOIS | FED. AID PROJECT

63

143RD STREET

64

500+00

JOHN HUMPHREY DRIVE

N

℄ JOHN HUMPHREY DRIVE

	STATION	OFFSET	LT/RT	ELEVATION
G1	499+22.23	31.87	RT	698.41
G2	499+26.98	33.30	RT	698.37
G3	499+33.00	35.80	RT	698.81
G4	499+20.25	39.62	RT	698.57
G5	499+24.34	40.85	RT	698.53
G6	499+29.52	43.00	RT	698.97

℄ 143RD STREET

	STATION	OFFSET	LT/RT	ELEVATION
H1	64+19.74	36.66	RT	698.36
H2	64+27.20	34.99	RT	697.79
H3	64+31.96	34.44	RT	697.74
H4	64+22.01	44.33	RT	698.52
H5	64+28.43	42.88	RT	697.95
H6	64+32.53	42.42	RT	698.01

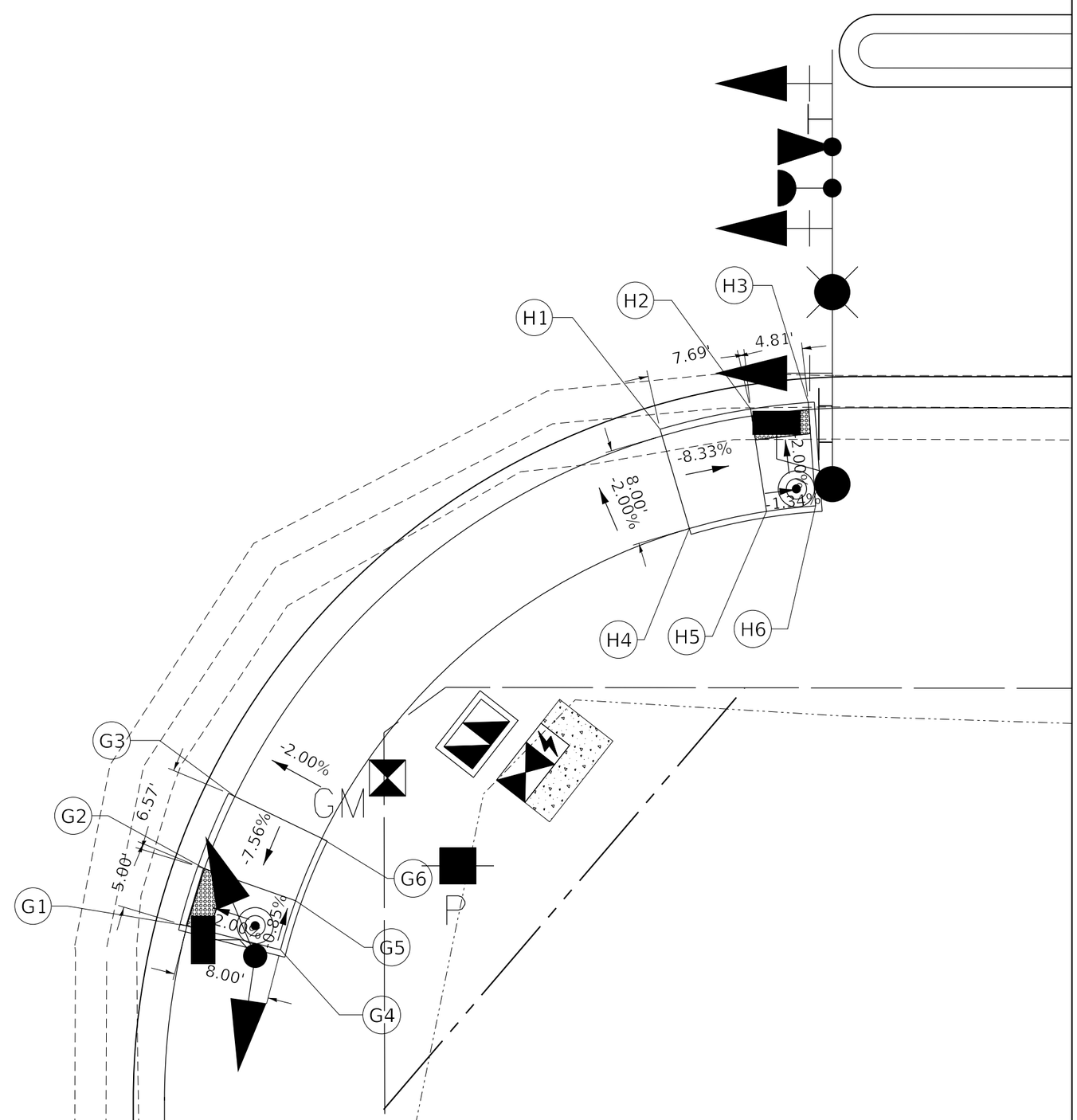

PLOT DRIVER = $PLTDRV15
PEN TABLE = $PENTBL15
FILE NAME = pw:\\patrickco-pw.bentley.com:patrickco-pw-07\Documents\Orland Park\22277.005\12_Design\12-3_CADD\SHEETS\143HD-sht-ADA-04.dgn

PATRICK ENGINEERING

USER NAME = dtroyer	DESIGNED -	REVISED -	
	DRAWN -	REVISED	
PLOT SCALE = 10.0000 ' / in.	CHECKED -	REVISED	
PLOT DATE = 12/3/2024	DATE - 12/03/24	REVISED	

499

STATE OF ILLINOIS
DEPARTMENT OF TRANSPORTATION

JOHN HUMPHREY DRIVE AT 143RD STREET
ADA PLANS

SCALE: 1" = 10' | SHEET OF SHEETS | STA. TO STA.

F.A.U. RTE.	SECTION	COUNTY	TOTAL SHEETS	SHEET NO.
2520	16-00078-00-CH	COOK	228	80
		CONTRACT NO. 61K89		
	ILLINOIS	FED. AID PROJECT		

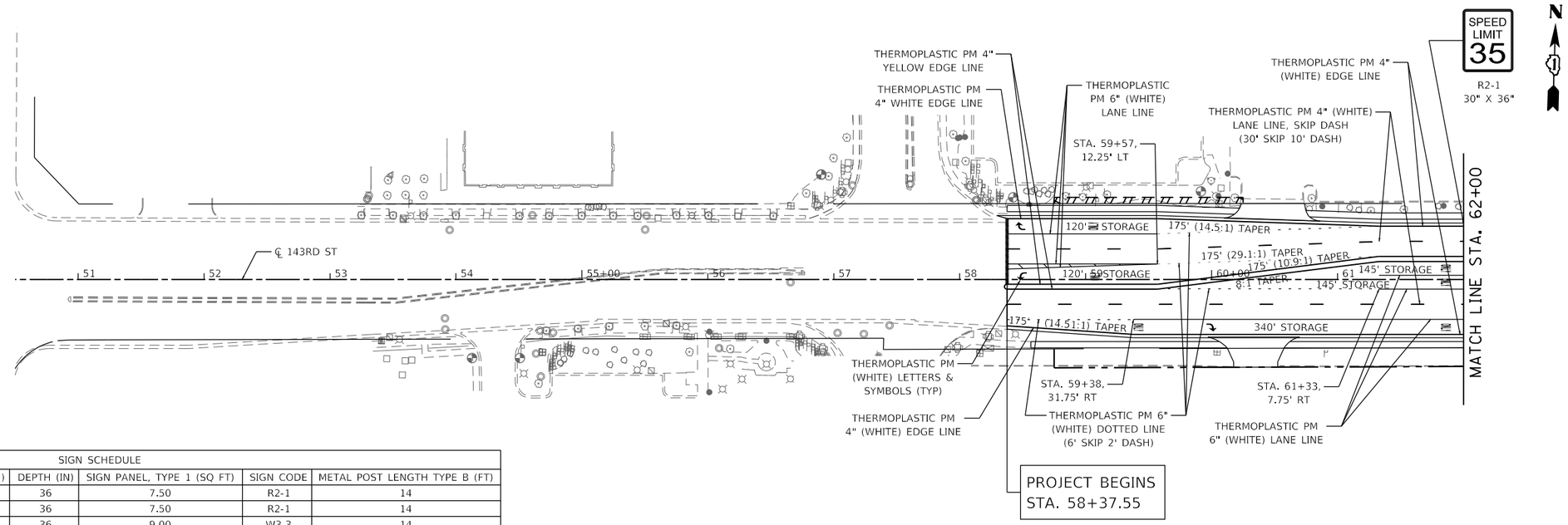

SIGN SCHEDULE							
STATION	SIDE	SIGN DESCRIPTION	WIDTH (IN)	DEPTH (IN)	SIGN PANEL, TYPE 1 (SQ FT)	SIGN CODE	METAL POST LENGTH TYPE B (FT)
62+00	LT	35 MPH	30	36	7.50	R2-1	14
67+81	LT	35 MPH	30	36	7.50	R2-1	14
71+20	LT	SIGNAL AHEAD	36	36	9.00	W3-3	14
71+20	LT	JOHN HUMPHREY DRIVE	9	36	2.25	D3-1	14
495+05	RT	RIGHT LANE MUST TURN RIGHT	36	36	9.00	R3-7R	14
502+00	RT	RIGHT LANE ENDS	36	36	9.00	W9-1	14
505+45	RT	STOP SIGN	36	36	9.00	R1-1	14
505+45	RT	ALL WAY (PLAQUE)	18	6	0.75	R1-3P	N/A

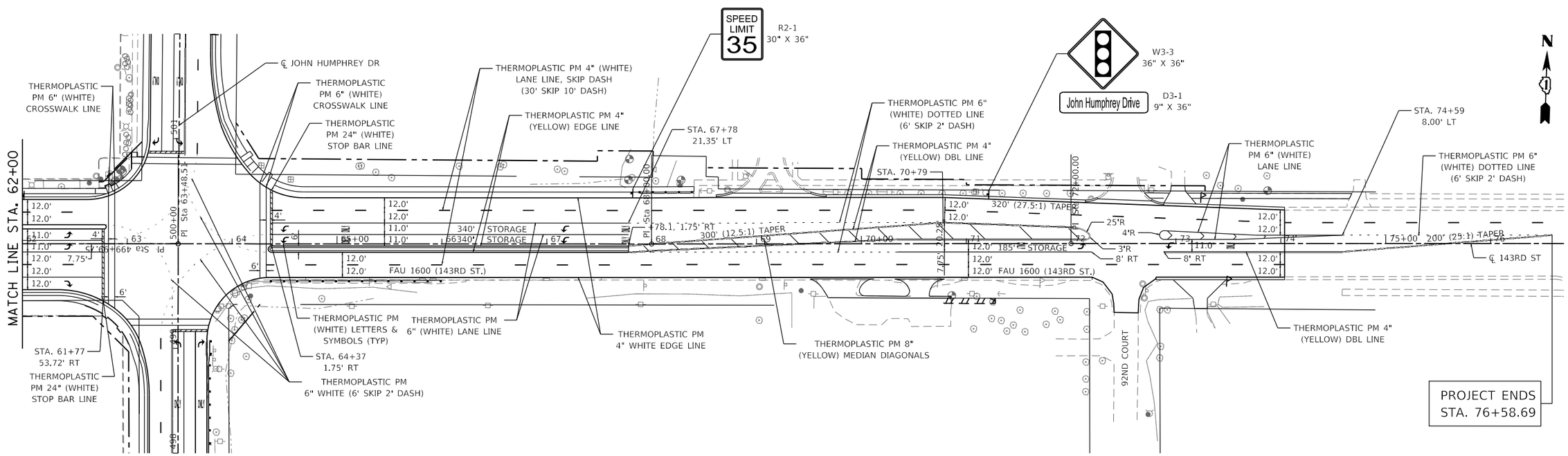

PLOT DRIVER = $PLTDRVLS
PEN TABLE = $PENTBLLS
FILE NAME = pw:\\patrickco-pw.bentley.com:patrickco-pw07\Documents\Orland Park\22277.005\12_Design\12.3_CADD\SHEETS\143HDsdnsPavedMark-d1.dgn

PATRICK ENGINEERING

USER NAME = dtroyer	DESIGNED -	REVISED -
	DRAWN -	REVISED -
PLOT SCALE = 100.0000 ' / in.	CHECKED -	REVISED -
PLOT DATE = 12/3/2024	DATE - 12/03/24	REVISED -

STATE OF ILLINOIS
DEPARTMENT OF TRANSPORTATION

JOHN HUMPHREY DRIVE AT 143RD STREET
PAVEMENT MARKING AND SIGNING PLAN

SHEET OF SHEETS STA. BEGIN TO STA. 75+00

F.A.U. RTE.	SECTION	COUNTY	TOTAL SHEETS	SHEET NO.
2520	16-00078-00-CH	COOK	228	81
		CONTRACT NO. 61K89		
		ILLINOIS	FED. AID PROJECT	

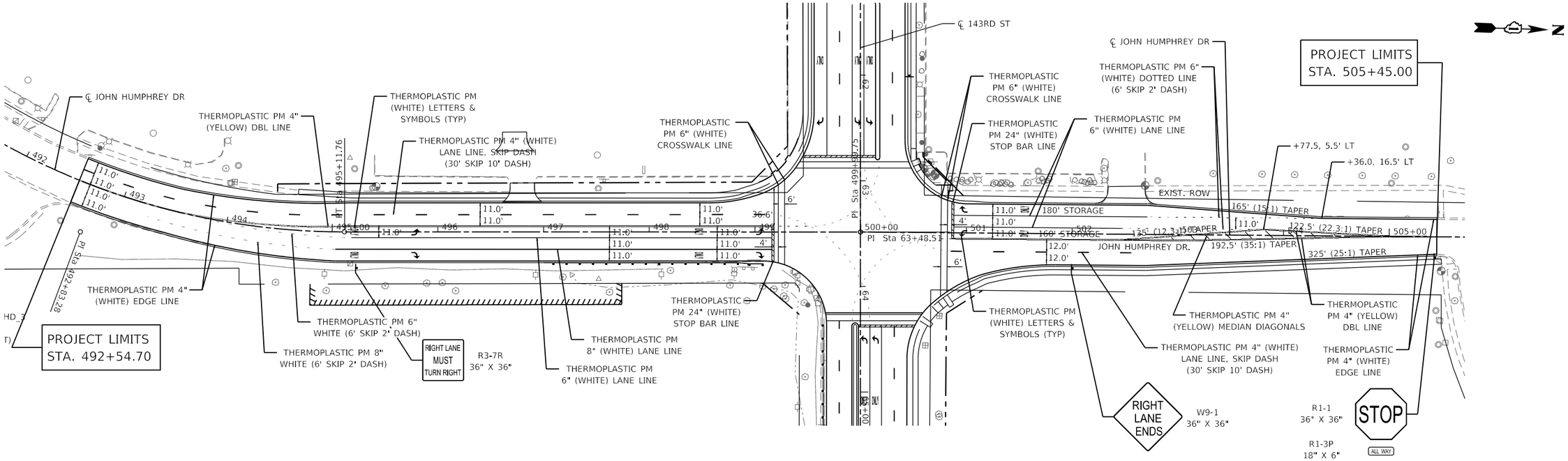

PLOT DRIVER = $PLTDRV1S
PEN TABLE = $PENTBL1S
FILE NAME = pw:\\patrickco-pw.bentley.com:patrickco-pw-07\Documents\Orland Park\22277.005\12_Design\12-3_CADD\SHEETS\143HDr-Sth-Pavelsfark-02.dgn

PATRICK ENGINEERING

USER NAME = dtroyer	DESIGNED -	REVISED -	
	DRAWN -	REVISED -	
PLOT SCALE = 100.0000 ' / in.	CHECKED -	REVISED -	
PLOT DATE = 12/3/2024	DATE - 12/03/24	REVISED -	

STATE OF ILLINOIS
DEPARTMENT OF TRANSPORTATION

JOHN HUMPHREY DRIVE AT 143RD STREET
PAVEMENT MARKING AND SIGNING PLAN

SHEET OF SHEETS STA. 492+00 TO STA. 506+00

F.A.U. RTE.	SECTION	COUNTY	TOTAL SHEETS	SHEET NO.
2520	16-00078-00-CH	COOK	228	82

CONTRACT NO. 61K89

ILLINOIS FED. AID PROJECT

LANDSCAPING NOTES

1. THE CONTRACTOR SHALL AVOID ALL EXISTING UTILITIES (UNDERGROUND AND OVERHEAD) WHERE APPLICABLE. FIELD ADJUSTMENTS RECOMMENDED BY THE CONTRACTOR AND INTENDED TO AVOID DISTURBING ANY SUCH UTILITIES MUST BE APPROVED BY THE ENGINEER AND LANDSCAPE ARCHITECT PRIOR TO INSTALLATION OF WORK. NEITHER THE OWNER NOR THE LANDSCAPE ARCHITECT ASSUME ANY RESPONSIBILITY WHATSOEVER IN RESPECT TO THE CONTRACTORS ACCURACY IN LOCATING THE INDICATED PLANT MATERIAL.

2. ALL PLANT MATERIALS SHALL CONFORM TO THE LATEST EDITION OF THE AMERICAN STANDARD FOR NURSERY STOCK AS PUBLISHED BY THE AMERICAN NURSERY AND LANDSCAPE ASSOCIATION, 230 SOUTHERN BUILDING, WASHINGTON DC 20005 (ANSI Z60.1).

3. THE CONTRACTOR SHALL PLANT TREES AND SHRUBS AFTER THE FINAL GRADES HAVE BEEN ESTABLISHED AND PRIOR TO SEEDING.

4. PRUNE BROKEN OR CROSS BRANCHING PLANTING WHERE REQUIRED. DO NOT REMOVE LEADERS.

5. FOR TREES PLANTED IN TURF AREAS, PROVIDE 4'-0'' DIAMETER X 4 INCH THICK MULCH RING WITH A SPADE EDGE. REMOVE EXISTING TURF WHERE REQUIRED. THIS WORK IS INCLUDED IN THE COST OF THE TREE PLANTING SCOPE OF WORK AND AT NO ADDITIONAL COST.

6. ALL PLANT MATERIALS SHALL BE INSTALLED IN PLANTING AREAS IN ACCORDANCE WITH THE DRAWINGS AND SPECIFICATIONS. ALL PLANTING AREAS FOUND TO BE NON-COMPLIANT SHALL BE REMOVED AND REPLANTED BY THE CONTRACTOR AT NO ADDITIONAL COST.

7. THE LANDSCAPE ARCHITECT OR THE ENGINEER RESERVES THE RIGHT TO REJECT PLANTING MATERIAL ON SITE WHETHER STOCK-PILED OR PLANTED IN PLACE. REJECTED MATERIAL SHALL BE IMMEDIATELY REMOVED FROM THE SITE AND REPLACED WITH ACCEPTABLE PLANT MATERIAL AT NO ADDITIONAL COST.

8. AN APPROVED PRE-EMERGENT HERBICIDE SHALL BE APPLIED IN ALL PLANTING BEDS AT THE RATE SPECIFIED AND RECOMMENDED BY THE MANUFACTURE FOR EACH PLANT VARIETY. SEE SPECIFICATIONS.

9. THE CONTRACTOR SHALL PROVIDE A SPADE EDGE WHERE PLANTING BEDS MEET TURF AREAS INDICATED ON PLANS. PROVIDE MULCH AT ALL SHRUB BEDS TO LIMIT LINES INDICATED ON THE DRAWINGS. THE CONTRACTOR SHALL FURNISH AND INSTALL A 3 INCH LAYER OF ORGANIC FIBER MATERIAL UNDER ALL TREE PLANTING AND SHRUB BEDS. THE CONTRACTOR SHALL INCLUDE SAMPLES OF SUCH MATERIAL AS PART OF THE REQUIRED SHOP DRAWING SUBMITTAL PROCESS. SEE THE PROJECT SPECIFICATIONS FOR ADDITIONAL REQUIREMENTS.

10. THE CONTRACTOR SHALL KEEP ALL PAVEMENT SURFACES AND WORK AREAS CLEAN. EACH TRADE ON THE SITE WILL BE REQUIRED TO CLEAN AND DISCARD ALL CONSTRUCTION RELATED DEBRIS FROM THE WORK AREA AT THE END OF EACH DAY

11. THE LANDSCAPE CONTRACTOR SHALL PROTECT ALL WORK SURFACES FROM DAMAGES BY OTHERS UNTIL HIS WORK IS COMPLETE AND ACCEPTED BY THE ENGINEER.

12. ALL PLANT MATERIAL SHALL BE FULLY GUARANTEED FOR A PERIOD OF NOT LESS THAN ONE YEAR AFTER THE DATE OF ACCEPTANCE. UNHEALTHY OR EXPIRED PLANT STOCK SHALL BE REPLACED AS SOON AS CONDITIONS PERMIT AT NO ADDITIONAL COST.

13. SUBSTITUTIONS OF PLANT MATERIAL DUE TO AVAILABILITY OF MATERIALS SPECIFIED SHALL BE APPROVED BY THE ENGINEER AND COORDINATED WITH THE LANDSCAPE ARCHITECT. ALL SUBSTITUTED PLANT MATERIALS SHALL BE EQUAL TO OR LARGER THAN THE ITEMS SPECIFIED ON THE PLANT LIST.

14. THE CONTRACTOR SHALL TAKE EXTRA CARE IN DRADING AND EXCAVATING NEAR TREES WHICH ARE NOT MARKED FOR REMOVAL SO AS NOT TO CAUSE INJURY TO THE ROOT SYSTEM OR TRUNKS. ANY DAMAGE DONE TO EXISTING ITEMS BY THE CONTRACTOR SHALL BE REPAIRED BY THE CONTRACTOR AT THE CONTRACTOR'S OWN EXPENSE.

15. ALL TREE PROTECTION, TREE REMOVAL, PRUNING AND ROOT PRUNING SHALL BE COMPLETED BEFORE CONSTRUCTION OPERATIONS COMMENCE IN ANY AREA. AT NO TIME SHALL THE CONTRACTOR PRUNE OR REMOVE ANY TREES UNLESS SPECIFICALLY DIRECTED BY THE ENGINEER.

LEGEND

SEEDING CLASS 2A

PRAIRIE SEEDING (SPECIAL)
(SHORELINE MIX)

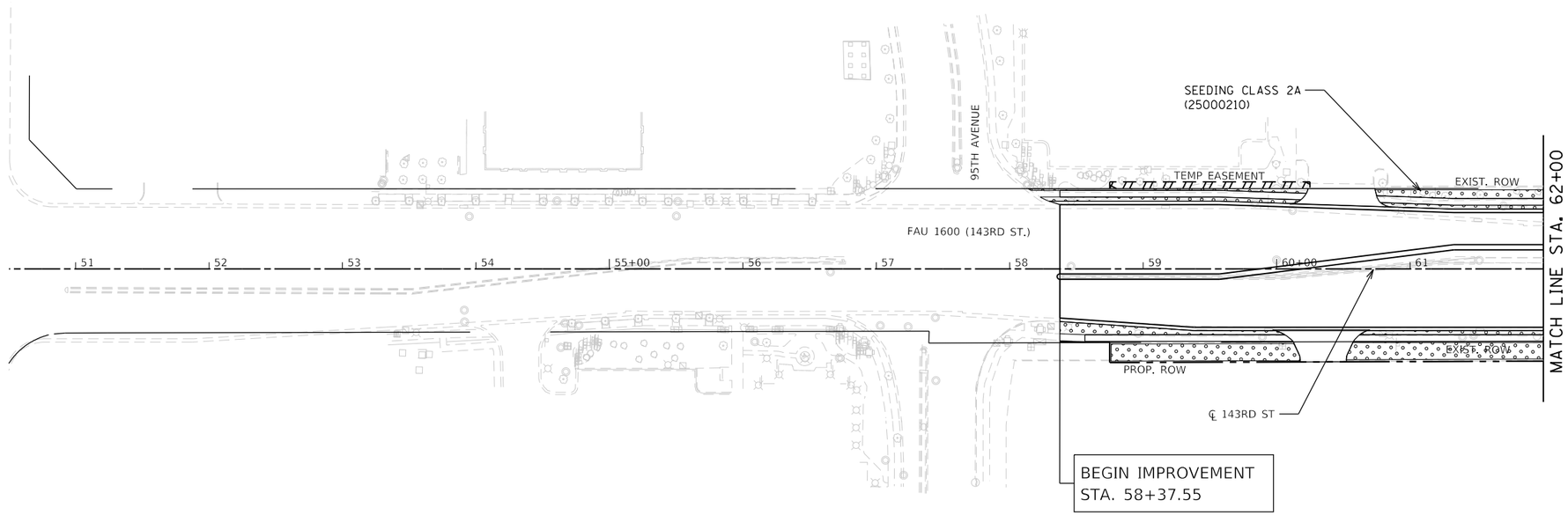

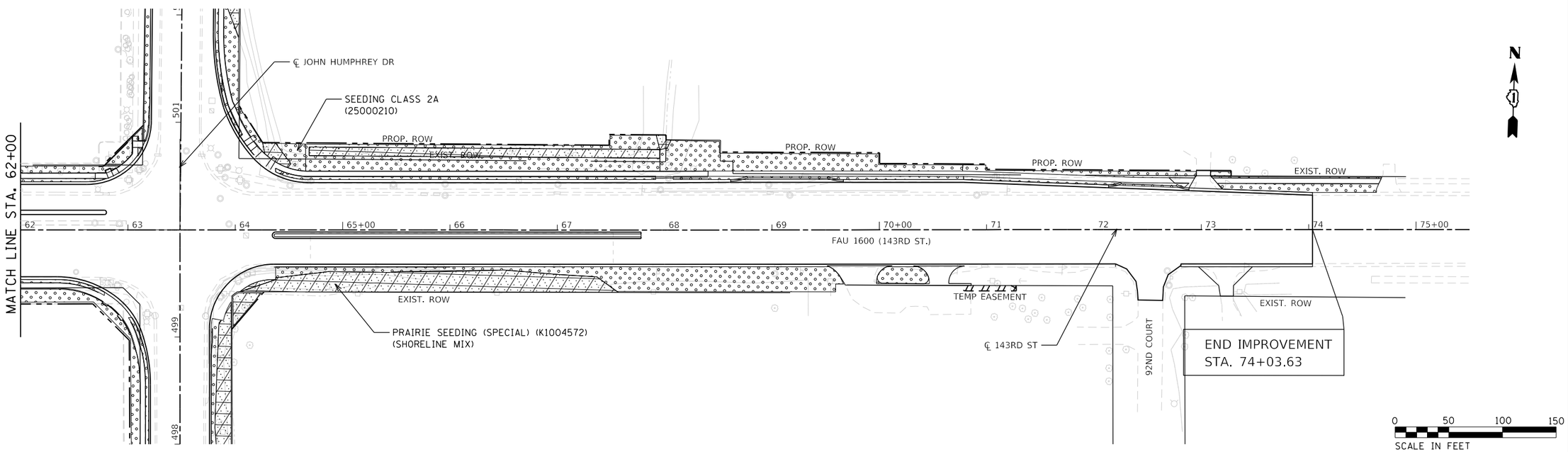

PLOT DRIVER = $PLTDRV$
PEN TABLE = $PENTBL$
FILE NAME = pw:\\patrickco-pw.bentley.com:patrickco-pw-01\Documents\Orland Park\22277.005\12_Design\12-3_CADD\SHEETS\143HD-sht-LND5CP-01.dgn

CHRISTOPHER B. BURKE ENGINEERING, LTD. 9575 W. Higgins Road, Suite 600 Rosemont, Illinois 60018 (847) 823-0500	USER NAME = dtroyer	DESIGNED -	REVISED -
		DRAWN -	REVISED -
	PLOT SCALE = 100.0000 ' / in.	CHECKED -	REVISED -
	PLOT DATE = 12/3/2024	DATE - 12/03/24	REVISED -

STATE OF ILLINOIS
DEPARTMENT OF TRANSPORTATION

JOHN HUMPHREY DRIVE AT 143RD STREET
LANDSCAPING PLAN

SCALE: 1" = 50' | SHEET OF SHEETS | STA. BEGIN TO STA. 75+00

F.A.U RTE.	SECTION	COUNTY	TOTAL SHEETS	SHEET NO.
2520	16-00078-00-CH	COOK	228	84
		CONTRACT NO. 61K89		
		ILLINOIS	FED. AID PROJECT	

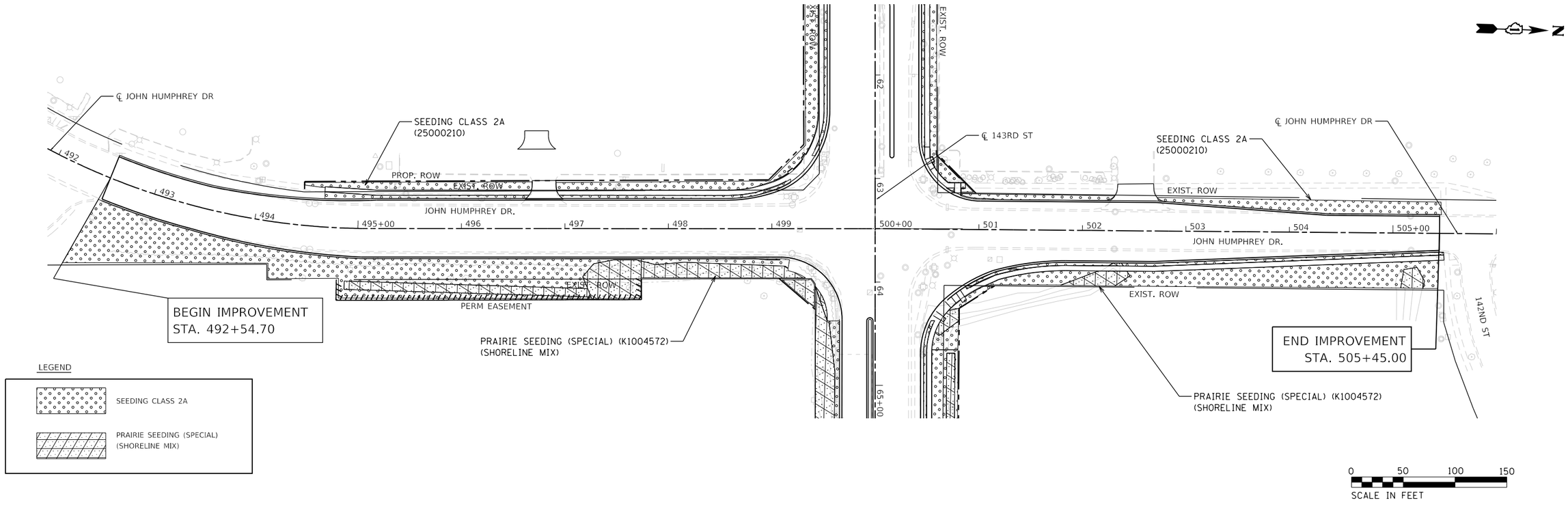

PLOT DRIVER = $PLTDRV1S
PEN TABLE = $PENTBL1S
FILE NAME = pw:\\patrickco-pw.bentley.com:patrickco-pw-07\Documents\Orland Park\22277.005\12_Design\12-3_CADD\SHEETS\143HD-sht-LNDSCP-02.dgn

CHRISTOPHER B. BURKE ENGINEERING, LTD.
9575 W. Higgins Road, Suite 600
Rosemont, Illinois 60018
(847) 823-0500

USER NAME = dtroyer	DESIGNED -	REVISED -	
	DRAWN -	REVISED -	
PLOT SCALE = 100.0000 ' / in.	CHECKED -	REVISED -	
PLOT DATE = 12/3/2024	DATE - 12/03/24	REVISED -	

STATE OF ILLINOIS
DEPARTMENT OF TRANSPORTATION

JOHN HUMPHREY DRIVE AT 143RD STREET
LANDSCAPE PLAN

SCALE: 1" = 50' | SHEET OF SHEETS | STA. 492+00 TO STA. 506+00

F.A.U RTE.	SECTION	COUNTY	TOTAL SHEETS	SHEET NO.
2520	16-00078-00-CH	COOK	228	85
		CONTRACT NO. 61K89		
		ILLINOIS	FED. AID PROJECT	

SIGN PANEL – TYPE 1 OR TYPE 2

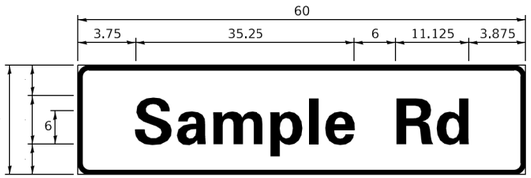

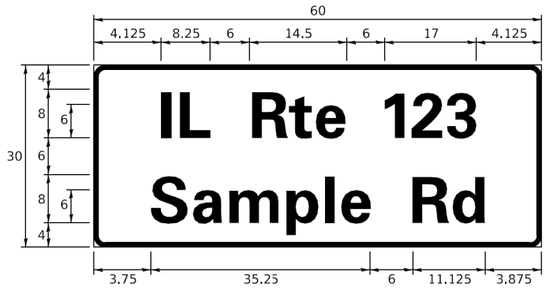

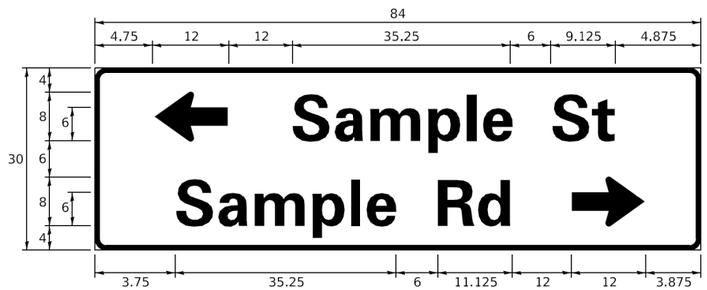

DESIGN SERIES	AREA (SQ FT)	SIGN PANEL TYPE	SHEETING TYPE	QTY. REQUIRED
D OR C	-	1 OR 2	ZZ	-

COMMON STREET NAME ABBREVIATIONS AND WIDTHS

NAME	ABBREVATION	WIDTH (INCH)	
		SERIES "C"	SERIES "D"
AVENUE	Ave	15.000	18.250
BOULEVARD	Blvd	17.125	20.000
CIRCLE	Cir	11.125	13.000
COURT	Ct	8.250	9.625
DRIVE	Dr	8.625	10.125
HIGHWAY	Hwy	18.375	22.000
ILLINOIS	IL	7.000	8.250
LANE	Ln	9.125	10.750
PARKWAY	Pkwy	23.375	27.375
PLACE	Pl	7.125	7.750
ROAD	Rd	9.625	11.125
ROUTE	Rte	12.625	14.500
STREET	St	8.000	9.125
TERRACE	Ter	12.625	14.625
TRAIL	Tr	7.750	9.125
UNITED STATES	US	10.375	12.250

GENERAL NOTES

1. WHERE MAST ARM MOUNTED STREET NAME SIGNS ARE SPECIFIED, THE MAST ARM ASSEMBLY AND POLES SHALL BE DESIGNED TO SUPPORT THE LOADINGS CALLED FOR ON STANDARDS 877001, 877002, 877006, 877011 AND 877012, AS APPLICABLE, PLUS TWO (2) SIGN PANELS 2'-6" x 8'-0" MOUNTED AS SHOWN. THE DESIGN SHALL BE IN ACCORDANCE WITH THE REQUIREMENTS OF THE CURRENT "STANDARD SPECIFICATIONS FOR STRUCTURAL SUPPORTS FOR HIGHWAY SIGNS, LUMINAIRES, AND TRAFFIC SIGNALS" AS PUBLISHED BY THE AMERICAN ASSOCIATION OF STATE HIGHWAY AND TRANSPORTATION OFFICIALS FOR 80 M.P.H. WIND VELOCITY.
2. ALL SIGNS SHALL CONSIST OF A WHITE LEGEND AND BORDER (TYPE ZZ SHEETING) ON A GREEN BACKGROUND (TYPE ZZ SHEETING)
3. THE SIGN LENGTH SHALL BE IN 6-INCH INCREMENTS, BUT THE OVERALL LENGTH SHALL NOT EXCEED 8'-0". ALL BORDERS IF POSSIBLE, BUT MAY BE REDUCED TO 5" WHEN SPACING IS CRITICAL. A MINIMUM OF 2-1/2" SHALL BE INCLUDED BETWEEN THE WORD AND THE RIGHT AND LEFT EDGES OF THE SIGN.
4. A PREFERRED METHOD FOR THE SIGN DESIGN IS TO USE SERIES "D" LETTER ON A ONE-LINE SIGN 18" IN HEIGHT AND A MAXIMUM OF 8'-0" IN WIDTH. IF SERIES "D" DOES NOT FIT ON A 8"-0" SIGN, THEN SERIES "C" SHOULD BE TRIED. IF SERIES "C" DOES NOT FIT ON A 8'-0" SIGN, A 30" HIGH TWO-LINE SIGN CAN BE USED. THE CROSSROAD DESIGNATION AS TO STREET, AVENUE, ETC. SHOULD BE SPELLED OUT ON THE SECOND LINE, IF THE ABBREVIATION CANNOT FIT ON THE FIRST LINE.
5. LED ILLUMINATED STREET NAME SIGNS CAN BE USED IN PLACE OF REGULAR SIGN PANELS BUT ANY SPECIAL WORDING AND SYMBOLOGY MUST BE APPROVED BY THE DEPARTMENT. GENERAL DESIGN REQUIREMENT AS LISTED ABOVE (COLOR, FONT, SIZE, ETC.) MUST BE FOLLOWED.
6. SIGNFIX ALUMINUM CHANNEL FRAMING SYSTEM SHALL BE USED FOR ALL SIGNS ATTACHED TO SIGNAL POLES AND POSTS.

~~LOCAL SUPPLIERS:~~

~~J.C. HERBERT COMPANY, INC.~~
~~MIDLOTHIAN, VA~~

~~WESTERN REMAC, INC.~~
~~WOODRIDGE, IL~~

~~PARTS LISTING:~~

~~SIGN CHANNEL~~
~~SIGN SCREWS~~

~~BRACKETS~~

~~PART #HPN055 (MED. CHANNEL)~~
~~1/4" x 14 x 1" H.W.H. #3~~
~~SELF TAPPING WITH NEOPRENE WASHER~~
~~PART #HPN034 (UNIVERSAL)~~
~~CHANNEL CLAMPS WITH STAINLESS STEEL STRAPPING~~

OTHER BRANDS OF MOUNTING HARDWARE ARE ACCEPTABLE, BASED UPON THE DEPARTMENT'S APPROVAL AND COMPATIBILITY WITH THE CHANNEL/BRACKET OF THE ABOVE PRODUCT.

MOUNTING LOCATION

ARM OR POLE MOUNTED

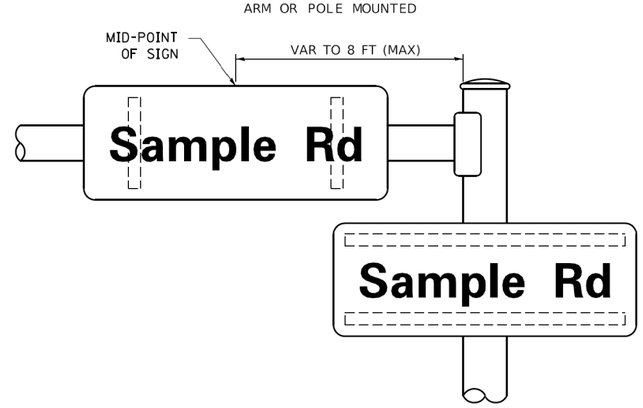

SUPPORTING CHANNELS

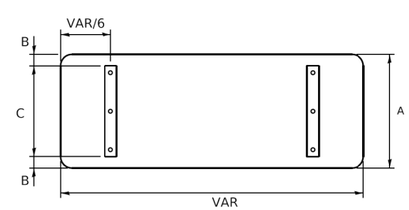

A	B	C
18"	2"	14"
30"	2"	24"

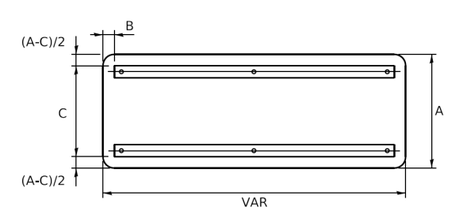

A	B	C
18"	2"	12"
30"	2"	22"

STANDARD ALPHABETS SPACING CHART

(8") UPPER CASE AND (6") LOWER CASE

FHWA SERIES "C"				FHWA SERIES "D"			
CHARACTER	LEFT SPACING (INCH)	WIDTH (INCH)	RIGHT SPACING (INCH)	CHARACTER	LEFT SPACING (INCH)	WIDTH (INCH)	RIGHT SPACING (INCH)
A	0.240	5.122	0.240	A	0.240	6.804	0.240
B	0.880	4.482	0.480	B	0.960	5.446	0.400
C	0.720	4.482	0.720	C	0.800	5.446	0.800
D	0.880	4.482	0.720	D	0.960	5.446	0.800
E	0.880	4.082	0.480	E	0.960	4.962	0.400
F	0.880	4.082	0.240	F	0.960	4.962	0.240
G	0.720	4.482	0.720	G	0.800	5.446	0.800
H	0.880	4.482	0.880	H	0.960	5.446	0.960
I	0.880	1.120	0.880	I	0.960	1.280	0.960
J	0.240	4.082	0.880	J	0.240	5.122	0.960
K	0.880	4.482	0.480	K	0.960	5.604	0.400
L	0.880	4.082	0.240	L	0.960	4.962	0.240
M	0.880	5.284	0.880	M	0.960	6.244	0.960
N	0.880	4.482	0.880	N	0.960	5.446	0.960
O	0.720	4.722	0.720	O	0.800	5.684	0.800
P	0.880	4.482	0.720	P	0.960	5.446	0.240
Q	0.720	4.722	0.720	Q	0.800	5.684	0.800
R	0.880	4.482	0.480	R	0.960	5.446	0.400
S	0.480	4.482	0.480	S	0.400	5.446	0.400
T	0.240	4.082	0.240	T	0.240	4.962	0.240
U	0.880	4.482	0.880	U	0.960	5.446	0.960
V	0.240	4.962	0.240	V	0.240	6.084	0.240
W	0.240	6.084	0.240	W	0.240	7.124	0.240
X	0.240	4.722	0.240	X	0.400	5.446	0.400
Y	0.240	5.122	0.240	Y	0.240	6.884	0.240
Z	0.480	4.482	0.480	Z	0.400	5.446	0.400
a	0.320	3.842	0.640	a	0.400	4.562	0.720
b	0.720	4.082	0.480	b	0.800	4.802	0.480
c	0.480	4.002	0.240	c	0.480	4.722	0.240
d	0.480	4.082	0.720	d	0.480	4.802	0.800
e	0.480	4.082	0.320	e	0.480	4.722	0.320
f	0.320	2.480	0.160	f	0.320	2.882	0.160
g	0.480	4.082	0.720	g	0.480	4.802	0.800
h	0.720	4.082	0.640	h	0.800	4.722	0.720
i	0.720	1.120	0.720	i	0.800	1.280	0.800
j	0.000	2.320	0.720	j	0.000	2.642	0.800
k	0.720	4.322	0.160	k	0.800	5.122	0.160
l	0.720	1.120	0.720	l	0.800	1.280	0.800
m	0.720	6.724	0.640	m	0.800	7.926	0.720
n	0.720	4.082	0.640	n	0.800	4.722	0.720
o	0.480	4.082	0.480	o	0.480	4.882	0.480
p	0.720	4.082	0.480	p	0.800	4.802	0.480
q	0.480	4.082	0.720	q	0.480	4.802	0.800
r	0.720	2.642	0.160	r	0.800	3.042	0.160
s	0.320	3.362	0.240	s	0.320	3.762	0.240
t	0.080	2.882	0.080	t	0.080	3.202	0.080
u	0.640	4.082	0.720	u	0.720	4.722	0.800
v	0.160	4.722	0.160	v	0.160	5.684	0.160
w	0.160	7.524	0.160	w	0.160	9.046	0.160
x	0.000	5.202	0.000	x	0.000	6.244	0.000
y	0.160	4.962	0.160	y	0.160	6.004	0.160
z	0.240	3.362	0.240	z	0.240	4.002	0.240
1	0.720	1.680	0.880	1	0.800	2.000	0.960
2	0.480	4.482	0.480	2	0.800	5.446	0.800
3	0.480	4.482	0.480	3	1.440	5.446	0.800
4	0.240	4.962	0.720	4	0.160	6.004	0.960
5	0.480	4.482	0.480	5	0.800	5.446	0.800
6	0.720	4.482	0.720	6	0.800	5.446	0.800
7	0.240	4.482	0.720	7	0.560	5.446	0.560
8	0.480	4.482	0.480	8	0.800	5.446	0.800
9	0.480	4.482	0.480	9	0.800	5.446	0.800
0	0.720	4.722	0.720	0	0.800	5.684	0.800
-	0.240	2.802	0.240	-	0.240	2.802	0.240

TRAFFIC SIGNAL LEGEND

(NOT TO SCALE)

ITEM	EXISTING	PROPOSED
CONTROLLER CABINET		
COMMUNICATION CABINET	CC	CC
MASTER CONTROLLER	MC	MC
MASTER MASTER CONTROLLER	MMC	MMC
UNINTERRUPTABLE POWER SUPPLY		
SERVICE INSTALLATION -(P) POLE MOUNTED	P	P
SERVICE INSTALLATION -(G) GROUND MOUNTED -(GM) GROUND MOUNTED METERED	G GM	G GM
TELEPHONE CONNECTION	ET	T
STEEL MAST ARM ASSEMBLY AND POLE		
ALUMINUM MAST ARM ASSEMBLY AND POLE		
STEEL COMBINATION MAST ARM ASSEMBLY AND POLE WITH LUMINAIRE		
SIGNAL POST -(BM) BARREL MOUNTED - TEMPORARY		BM
WOOD POLE		
GUY WIRE		
SIGNAL HEAD		
SIGNAL HEAD WITH BACKPLATE		
SIGNAL HEAD OPTICALLY PROGRAMMED	P P	P P
FLASHER INSTALLATION -(FS) SOLAR POWERED	F FS F FS	F FS F FS
PEDESTRIAN SIGNAL HEAD		
PEDESTRIAN PUSH BUTTON -(APS) ACCESSIBLE PEDESTRIAN PUSH BUTTON	APS	APS
RADAR DETECTION SENSOR	R	R
VIDEO DETECTION CAMERA	V	V
RADAR/VIDEO DETECTION ZONE		
PAN, TILT, ZOOM (PTZ) CAMERA	PTZ	PTZ
EMERGENCY VEHICLE LIGHT DETECTOR		
CONFIMATION BEACON		
WIRELESS INTERCONNECT		
WIRELESS INTERCONNECT RADIO REPEATER	ERR	RR

ITEM	EXISTING	PROPOSED
HANDHOLE -SQUARE -ROUND		
HEAVY DUTY HANDHOLE -SQUARE -ROUND	H H	H H
DOUBLE HANDHOLE		
JUNCTION BOX		
RAILROAD CANTILEVER MAST ARM		
RAILROAD FLASHING SIGNAL		
RAILROAD CROSSING GATE		
RAILROAD CROSSBUCK		
RAILROAD CONTROLLER CABINET		
UNDERGROUND CONDUIT (UC), GALVANIZED STEEL		
TEMPORARY SPAN WIRE, TETHER WIRE, AND CABLE		
SYSTEM ITEM	S	SP
INTERSECTION ITEM	I	IP
REMOVE ITEM		R
RELOCATE ITEM		RL
ABANDON ITEM		A
CONTROLLER CABINET AND FOUNDATION TO BE REMOVED		RCF
MAST ARM POLE AND FOUNDATION TO BE REMOVED		RMF
SIGNAL POST AND FOUNDATION TO BE REMOVED		RPF
DETECTOR LOOP, TYPE I		
PREFORMED DETECTOR LOOP	P P	P P
SAMPLING (SYSTEM) DETECTOR	S S	S S
INTERSECTION AND SAMPLING (SYSTEM) DETECTOR	IS IS	IS IS
QUEUE AND SAMPLING (SYSTEM) DETECTOR	QS QS	QS QS
WIRELESS DETECTOR SENSOR	W	W
WIRELESS ACCESS POINT		

ITEM	EXISTING	PROPOSED
SIGNAL HEAD -(P) PROGRAMMABLE SIGNAL HEAD	R Y G Y G P	R Y G Y G P
SIGNAL HEAD WITH BACKPLATE -(P) PROGRAMMABLE SIGNAL HEAD -(RB) RETROREFLECTIVE BACKPLATE	R Y G Y G P RB	R Y G Y G P RB
PEDESTRIAN SIGNAL HEAD AT RAILROAD INTERSECTIONS		
PEDESTRIAN SIGNAL HEAD WITH COUNTDOWN TIMER	C D	C D
ILLUMINATED SIGN "NO LEFT TURN"/"NO RIGHT TURN"		
NUMBER OF CONDUCTORS, ELECTRIC CABLE NO. 14, UNLESS NOTED OTHERWISE. ALL DETECTOR LOOP CABLE TO BE SHIELDED	5	5
GROUND CABLE IN CONDUIT, NO. 6 SOLID COPPER (GREEN)	1#6	1#6
ELECTRIC CABLE IN CONDUIT, TRACER NO. 14 1/C	1	1
COAXIAL CABLE	C	C
VENDOR CABLE	V	V
COPPER INTERCONNECT CABLE, NO. 18, 3 PAIR TWISTED, SHIELDED	6#18	6#18
FIBER OPTIC CABLE -NO. 62.5/125, MM12F -NO. 62.5/125, MM12F SM12F -NO. 62.5/125, MM12F SM24F	12F 24F 36F	12F 24F 36F
GROUND ROD -(C) CONTROLLER -(M) MAST ARM -(P) POST -(S) SERVICE	C M P S	C M P S

USER NAME = footemj	DESIGNED - IP	REVISED -	
	DRAWN - IP	REVISED -	
PLOT SCALE = 50.0000 ' / in.	CHECKED - LP	REVISED -	
PLOT DATE = 3/4/2019	DATE - 9/29/2016	REVISED -	

STATE OF ILLINOIS
DEPARTMENT OF TRANSPORTATION

DISTRICT ONE
STANDARD TRAFFIC SIGNAL DESIGN DETAILS

SCALE: NONE | SHEET 1 OF 7 SHEETS | STA. TO STA.

F.A. RTE.	SECTION	COUNTY	TOTAL SHEETS	SHEET NO.
2520	16-00078-00-CH	COOK	228	87
	TS-05	CONTRACT NO. 61K89		
		ILLINOIS	FED. AID PROJECT	

LOOP DETECTOR NOTES

1. EACH PAIR OF LOOP WIRES SHALL BE PLACED IN A SEPARATE EMPTY COILABLE NONMETALLIC CONDUIT FROM THE EDGE OF PAVEMENT TO THE HANDHOLE. SPACING BETWEEN THE HOLES DRILLED IN THE PAVEMENT SHALL NOT BE LESS THAN 6" (150 mm). EMPTY COILABLE NONMETALLIC CONDUIT SHALL BE INCLUDED IN THE COST OF THE LOOP WIRE.

2. THE NUMBER OF LOOP TURNS SHALL BE AS RECOMMENDED BY THE AMPLIFIER MANUFACTURER. ALL ADJACENT SIDES OF THE LOOPS SHALL BE INSTALLED IN SUCH A WAY THAT THE CURRENT FLOW IS IN THE SAME DIRECTION TO REINFORCE ITS MAGNETIC FIELDS FOR SMALL VEHICLE DETECTION.

3. EACH LOOP LEAD-IN SHALL BE IDENTIFIED AND PERMANENTLY TAGGED IN THE HANDHOLE. EACH LEAD-IN CABLE TAG SHALL INDICATE THE LOCATION OF THE LOOP, LOOP ROTATION (CLOCKWISE/COUNTERCLOCKWISE), LOOP LEAD-IN DIRECTION (IN OR OUT), LOOP CABLE NUMBER AND LOCATION IN CABINET, AND NUMBER OF TURNS IN THE DETECTOR LOOPS IN WATER PROOF INK AS INDICATED ON THE DISTRICT 1 STANDARD TRAFFIC SIGNAL DESIGN DETAIL. THE CONTRACTOR SHALL MARK LOOP LOCATIONS ON RECORD DRAWINGS AND PRESENT TO THE ENGINEER AFTER FINAL INSPECTION. LOOPS SHALL BE MARKED BY LANE AND LOOP NUMBER. SEE DETAIL BELOW.

4. ALL LOOP CABLE SHALL BE FASTENED WITH PLASTIC TIE WRAP TO THE HANDHOLE HOOKS.

5. IN ASPHALT PAVEMENT, LOOPS SHOULD BE PLACED IN THE BINDER AND DIVEHOLES MARKED AT THE CURB WITH A SAW-CUT. THE SAW-CUT SHALL BE CUT IN ACCORDANCE WITH LOCAL AND E.P.A. DUST CONTROL REQUIREMENTS. DETECTOR LOOP(S) SHALL NOT BE INSTALLED IN WET CONDITIONS AND THE SAW-CUTS MUST BE FREE OF DEBRIS AND RESIDUE SUCH AS DUST AND WATER WHICH IS TO BE ACHIEVED BY THE USE OF COMPRESSED AIR, WIRE BRUSHING AND HEAT DRYING ACCORDING TO SEALANT MANUFACTURER REQUIREMENTS. THE DETECTOR WIRE SHALL BE HELD IN PLACE BY THE USE OF FORM WEDGES. WEDGES SHALL BE SPACED NO MORE THAN 18" (450 mm) APART.

6. LOOP SPLICES SHALL BE SOLDERED USING A SOLDERING IRON. BLOW TORCHES OR OTHER DEVICES WHICH OXIDIZE COPPER CABLE SHALL NOT BE ALLOWED FOR SOLDERING OPERATIONS. SEE DETAIL BELOW RIGHT.

7. PREFORMED DETECTOR LOOPS SHALL BE USED, AS SHOWN ON THE PLANS, WHERE NEW CONCRETE PAVEMENT IS PROPOSED. THE INSTALLATION OF PREFORMED LOOPS SHALL BE IN ACCORDANCE WITH THE DISTRICT 1 SPECIFICATIONS OR AS DIRECTED BY THE ENGINEER.

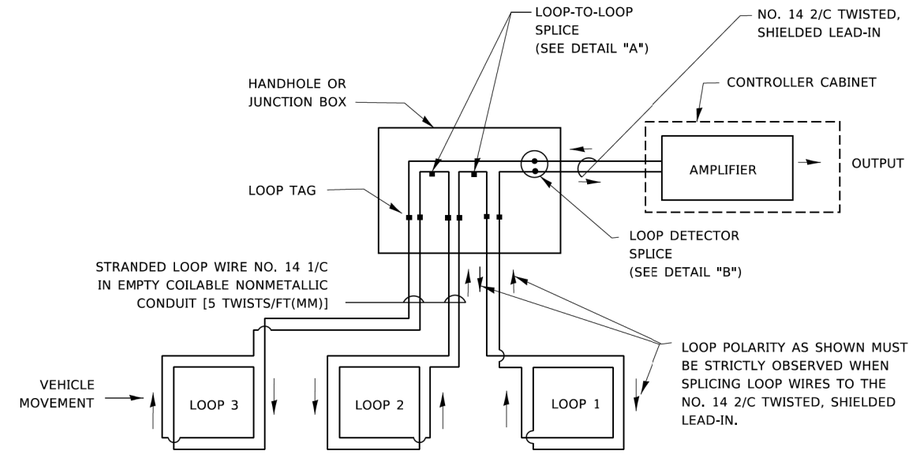

DETECTOR LOOP WIRING SCHEMATIC

- LOOPS SHALL BE SPLICED IN SERIES. SAW-CUTS SHALL BE A MINIMUM WIDTH OF 5/16" (8 mm).
- SAW-CUT DEPTHS SHALL BE 3" (75 mm). IF IN CONCRETE,
- THE SAW-CUT DEPTH SHALL BE TO THE TOP OF THE REINFORCEMENT.
- LOOP CORNERS SHALL BE DRILLED WITH A 2" (50 mm) DIAMETER CORE.

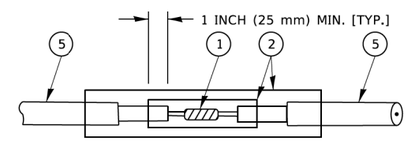

DETAIL "A"
LOOP-TO-LOOP SPLICE

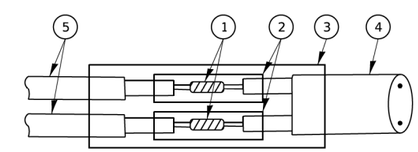

DETAIL "B"
LOOP-TO-CONTROLLER SPLICE

TYPE I LOOP

LOOP LEAD-IN CABLE TAG

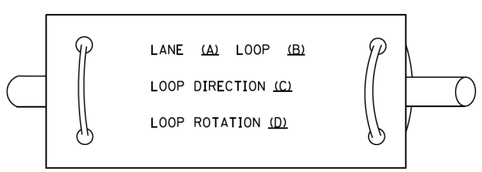

A. LANE 1 IS THE LANE CLOSEST TO THE CENTERLINE OF THE ROADWAY

B. LOOP #1 IS THE LOOP IN THE LANE CLOSEST TO THE INTERSECTION.

C. LABEL LOOP CABLE "IN" OR LOOP CABLE "OUT".

D. LABEL LOOP CABLE CLOCKWISE OR LOOP CABLE COUNTERCLOCKWISE.

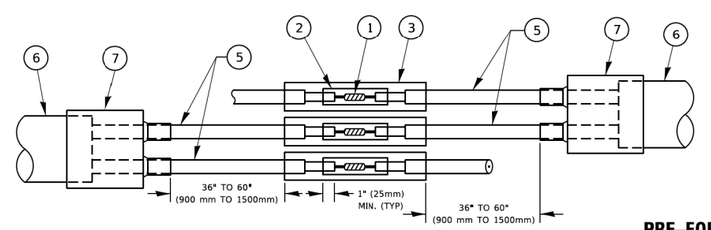

DETAIL "A"
LOOP-TO-LOOP SPLICE

PRE-FORMED LOOP

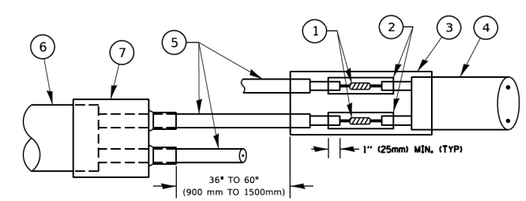

DETAIL "B"
LOOP-TO-CONTROLLER SPLICE

LOOP DETECTOR SPLICE

1. WESTERN UNION SPLICE SOLDERED WITH ROSIN CORE FLUX. ALL EXPOSED SURFACES OF THE SOLDER SHALL BE SMOOTH. THE WESTERN UNION SPLICES SHALL BE STAGGERED.
2. WCSMW 30/100 HEAT SHRINK TUBE, MINIMUM LENGTH 3" (75 mm), UNDERWATER GRADE.
3. WCS 200/750 HEAT SHRINK TUBE, MINIMUM LENGHT 6" (150 mm), UNDERWATER GRADE.
4. NO. 14 2/C TWISTED, SHIELDED CABLE.
5. LOOP CONDUCTOR WITH FLEXIBLE PLASTIC TUBE. PRE-FORMED LOOP
6. XL POLYOLEFIN 2 CONDUCTOR
7. BREAKOUT SEALS. [redacted]

USER NAME = footemj	DESIGNED -	REVISED -	
	DRAWN -	REVISED -	
PLOT SCALE = 50.0000 ' / in.	CHECKED -	REVISED -	
PLOT DATE = 3/4/2019	DATE -	REVISED -	

STATE OF ILLINOIS
DEPARTMENT OF TRANSPORTATION

DISTRICT ONE
STANDARD TRAFFIC SIGNAL DESIGN DETAILS

SCALE: NONE | SHEET 2 OF 7 SHEETS | STA. TO STA.

F.A. RTE.	SECTION	COUNTY	TOTAL SHEETS	SHEET NO.
2520	16-00078-00-CH	COOK	228	88
	TS-05	CONTRACT NO. 61K89		
	ILLINOIS	FED. AID PROJECT		

TRAFFIC SIGNAL MAST ARM AND SIGNAL POST

MAST ARM MOUNTED SIGNALS IN EXISTING, PROPOSED OR FUTURE SIDEWALK/BICYCLE PATH AREA. INTERSECTION SHOWN WITH PEDESTRIAN SIGNALS AND PEDESTRIAN PUSHBUTTON DETECTORS.

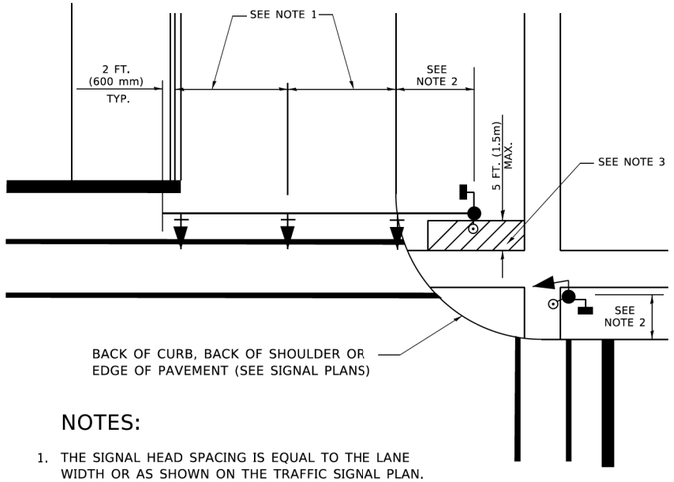

NOTES:

1. THE SIGNAL HEAD SPACING IS EQUAL TO THE LANE WIDTH OR AS SHOWN ON THE TRAFFIC SIGNAL PLAN.
2. REFER TO THE TRAFFIC SIGNAL EQUIPMENT OFFSET TABLE.
3. PROVIDE A LEVEL ALL-WEATHER SURFACE (CONCRETE SIDEWALK, ASPHALT BICYCLE PATH SURFACE OR MATCHING MATERIAL TO THE ADJACENT SURFACE) UP TO THE MAST ARM SHAFT OR THE SIGNAL POST.
4. THE FACE OF THE PEDESTRIAN PUSHBUTTON SHALL BE PARALLEL TO THE CROSSWALK TO BE USED.
5. THE LOCATIONS AND INSTALLATION OF PEDESTRIAN SIGNAL HEADS AND PEDESTRIAN PUSHBUTTONS SHALL MEET THE REQUIREMENTS OF THE MUTCD AND INFORMATION FOUND IN THE "AMERICANS WITH DISABILITIES ACT ACCESSIBILITY GUIDELINES FOR BUILDINGS AND FACILITIES."

PEDESTRIAN SIGNAL POST AND PEDESTRIAN PUSH BUTTON POST

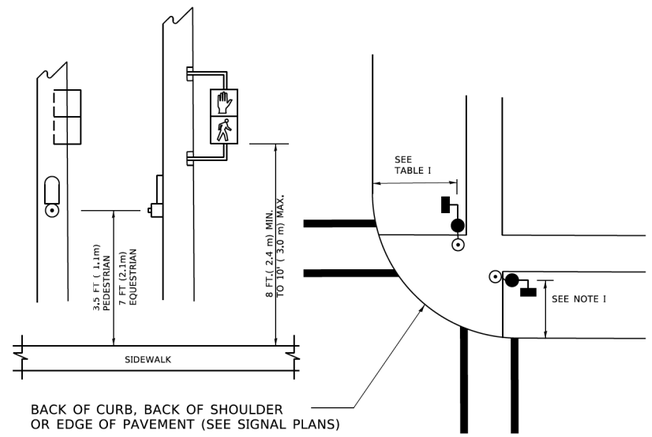

NOTES:

1. REFER TO THE TRAFFIC SIGNAL EQUIPMENT OFFSET TABLE.
2. PROVIDE A LEVEL ALL-WEATHER SURFACE (CONCRETE SIDEWALK, ASPHALT BICYCLE PATH SURFACE OR MATCHING MATERIAL TO THE ADJACENT SURFACE) UP TO THE PEDESTRIAN SIGNAL POST OR THE PEDESTRIAN PUSH BUTTON POST.
3. THE FACE OF THE PEDESTRIAN PUSHBUTTON SHALL BE PARALLEL TO THE CROSSWALK TO BE USED.
4. THE LOCATIONS AND INSTALLATION OF PEDESTRIAN SIGNAL HEADS AND PEDESTRIAN PUSHBUTTONS SHALL MEET THE REQUIREMENTS OF THE MUTCD AND INFORMATION FOUND IN THE "AMERICANS WITH DISABILITIES ACT ACCESSIBILITY GUIDELINES FOR BUILDINGS AND FACILITIES."

RECOMMENDED PUSHBUTTON LOCATIONS

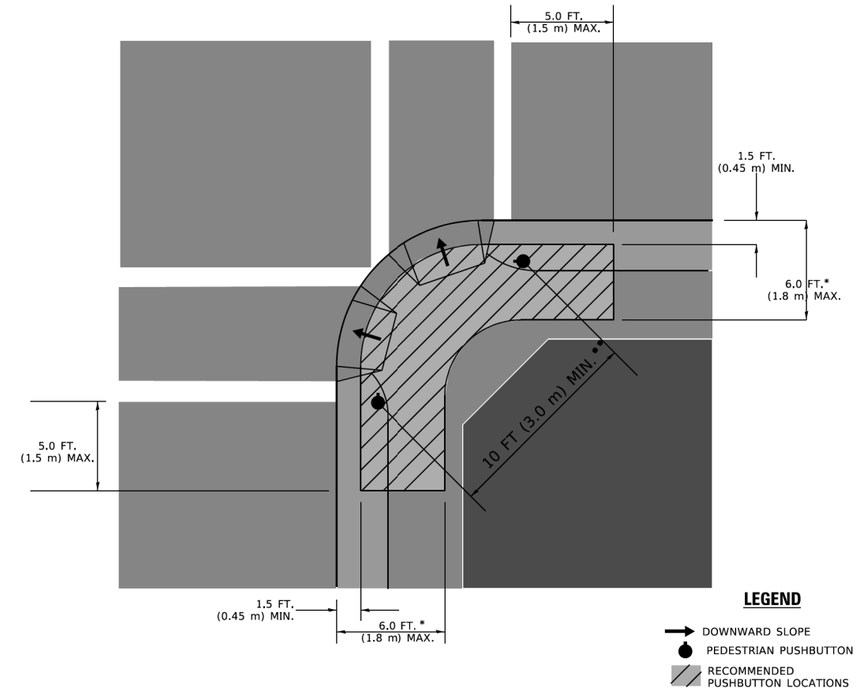

* WHERE THERE ARE CONSTRAINTS THAT MAKE IT IMPRACTICAL TO PLACE THE PEDESTRIAN PUSHBUTTON BETWEEN 1.5 FT (0.45 m) AND 6 FT (1.8 m) FROM THE EDGE OF THE CURB, SHOULDER, OR PAVEMENT, IT SHOULD NOT BE FURTHER THAN 10 FT (3 m) FROM THE EDGE OF CURB, SHOULDER, OR PAVEMENT.

** WHERE THERE ARE CONSTRAINTS ON A PARTICULAR CORNER THAT MAKE IT IMPRACTICAL TO PROVIDE THE 10 FT (3 m) SEPERATION BETWEEN THE TWO PEDESTRIAN PUSHBUTTONS, THE PUSHBUTTONS MAY BE PLACED CLOSER TOGETHER OR ON THE SAME POLE.

NOTES:

1. PEDESTRIAN SIGNAL HEADS SHALL BE MOUNTED WITH THE BOTTOM OF THE SIGNAL HOUSING INCLUDING BRACKETS NOT LESS THAN 8 FT (2.4 m) OR MORE THAN 10 FT (3 m) ABOVE SIDEWALK LEVEL, AND SHALL BE POSITIONED AND ADJUSTED TO PROVIDE MAXIMUM VISIBILITY AT THE BEGINNING OF THE CONTROLLED CROSSWALK.
2. THE BOTTOM OF THE SIGNAL HOUSING (INCLUDING BRACKETS) OF A VEHICULAR SIGNAL FACE THAT IS NOT LOCATED OVER A HIGHWAY SHALL BE AT LEAST 8 FT (2.4 m) BUT NOT MORE THAN 19 FT (5.8 m) ABOVE THE SIDEWALK OR, IF THERE IS NO SIDEWALK, ABOVE THE PAVEMENT GRADE AT THE CENTER OF THE ROADWAY.
3. THE BOTTOM OF THE SIGNAL HOUSING AND ANY RELATED ATTACHMENTS TO A SIGNAL FACE LOCATED OVER ANY PORTION OF A HIGHWAY SHALL BE ACCORDING TO CURRENT STATE STANDARDS 877001, 877002, 877006, 877011 AND 877012 WITH A MINIMUM OF 16 FT (5.0 m) AND A MAXIMUM OF 18 FT. (5.5 m) FROM THE HIGHEST POINT OF PAVEMENT.
4. THE BOTTOM OF THE TEMPORARY SPAN WIRE MOUNTED SIGNAL HOUSING AND ANY RELATED ATTACHMENTS TO A SIGNAL FACE LOCATED OVER ANY PORTION OF A HIGHWAY SHALL BE ACCORDING TO CURRENT STATE STANDARD 880001 WITH A MINIMUM OF 17 FT (5.18 m) FROM THE HIGHEST POINT OF PAVEMENT.
5. THE TOP OF THE SIGNAL HOUSING OF A SIGNAL FACE LOCATED OVER ANY PORTION OF A HIGHWAY SHALL NOT BE MORE THAN 25.6 FT (7.8 m) ABOVE THE PAVEMENT.

TRAFFIC SIGNAL EQUIPMENT OFFSET

TRAFFIC SIGNAL EQUIPMENT	COMBINATION CONCRETE CURB AND GUTTER (MINIMUM DISTANCE FROM BACK OF CURB TO CENTERLINE OF FOUNDATION)	SHOULDER/NON-CURBED AREA (MINIMUM DISTANCE FROM EDGE OF PAVEMENT TO CENTERLINE OF FOUNDATION)
TRAFFIC SIGNAL MAST ARM POLE	6 FT (1.8m)	SHOULDER WIDTH + 2 FT (0.6m), MINIMUM 10 FT (3.0m)
TRAFFIC SIGNAL POST	4 FT (1.2m)	SHOULDER WIDTH + 2 FT (0.6m), MINIMUM 10 FT (3.0m)
PEDESTRIAN SIGNAL POST	4 FT (1.2m)	SHOULDER WIDTH + 2 FT (0.6m), MINIMUM 10 FT (3.0m)
PEDESTRIAN PUSHBUTTON POST	4 FT (1.2m)	SHOULDER WIDTH + 2 FT (0.6m), MINIMUM 10 FT (3.0m)
TEMPORARY WOOD POLE	6 FT (1.8m)	SHOULDER WIDTH + 2 FT (0.6m), MINIMUM 10 FT (3.0m)
CONTROLLER CABINET	6 FT (1.8m) MINIMUM DISTANCE SEE NOTE 2	SHOULDER WIDTH + 6 FT (1.8m), MINIMUM 16 FT (4.9m) SEE NOTE 3.
SERVICE INSTALLATION, GROUND MOUNT	6 FT (1.8m) MINIMUM DISTANCE SEE NOTE 2	SHOULDER WIDTH + 6 FT (1.8m), MINIMUM 16 FT (4.9m) SEE NOTE 3.

NOTES:

1. CONTACT THE "AREA TRAFFIC SIGNAL MAINTENANCE AND OPERATIONS ENGINEER" FOR ASSISTANCE IN LOCATING THE TRAFFIC SIGNAL EQUIPMENT WHEN THERE ARE CONFLICTS WITH DITCHES OR THE MINIMUM OFFSET DISTANCES CANNOT BE MET.
2. MINIMUM DISTANCE FROM THE BACK OF CURB TO THE ROADWAY SIDE OF THE FOUNDATION.
3. MINIMUM DISTANCE FROM THE EDGE OF PAVEMENT TOTHE ROADWAY SIDE OF THE FOUNDATION.
4. ANY CHANGES TO THE OFFSETS OF THE FOUNDATIONS, FROM THE MINIMUM DISTANCES LISTED IN THE "TRAFFIC SIGNAL EQUIPMENT OFFSET" CHART AND THE TRAFFIC SIGNAL INSTALLATION PLAN, COULD EFFECT THE PLACEMENT OF THE SIGNAL HEADS, PEDESTRIAN SIGNAL HEADS AND THE PEDESTRIAN PUSHBUTTONS. THE SIGNAL HEAD PLACEMENT ON THE MAST ARMS SHALL REMAIN AS PER THE TRAFFIC SIGNAL INSTALLATION PLAN AND THE "TRAFFIC SIGNAL MAST ARM AND SIGNAL POST" DETAIL ABOVE. THE PROPOSED MAST ARM LENGTHS MAY NEED TO BE REVISED TO MEET THE ABOVE REQUIREMENTS. THE PEDESTRIAN SIGNAL HEADS AND PEDESTRIAN PUSHBUTTONS MUST MEET THE REQUIREMENTS UNDER THE DETAILS ON THIS SHEET.

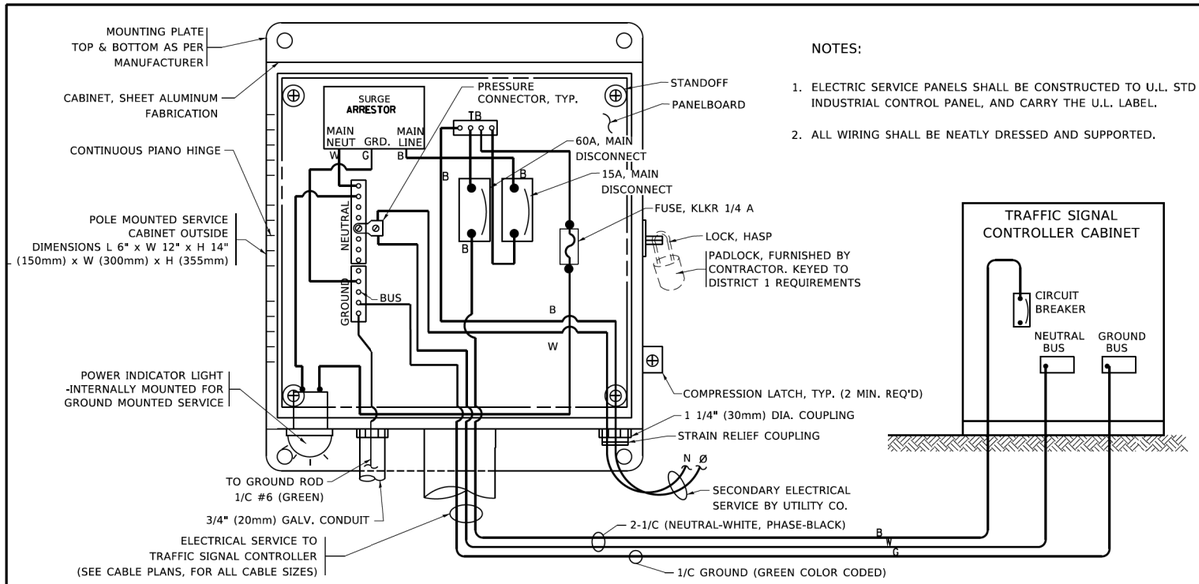

NOTES:

1. ELECTRIC SERVICE PANELS SHALL BE CONSTRUCTED TO U.L. STD 508, INDUSTRIAL CONTROL PANEL, AND CARRY THE U.L. LABEL.
2. ALL WIRING SHALL BE NEATLY DRESSED AND SUPPORTED.

ELECTRICAL SERVICE – PANEL DIAGRAM (TYPICAL FOR POLE AND GROUND MOUNTED SERVICE)

SERVICE INSTALLATION POLE MOUNT (SHOWN)

(NOT TO SCALE)

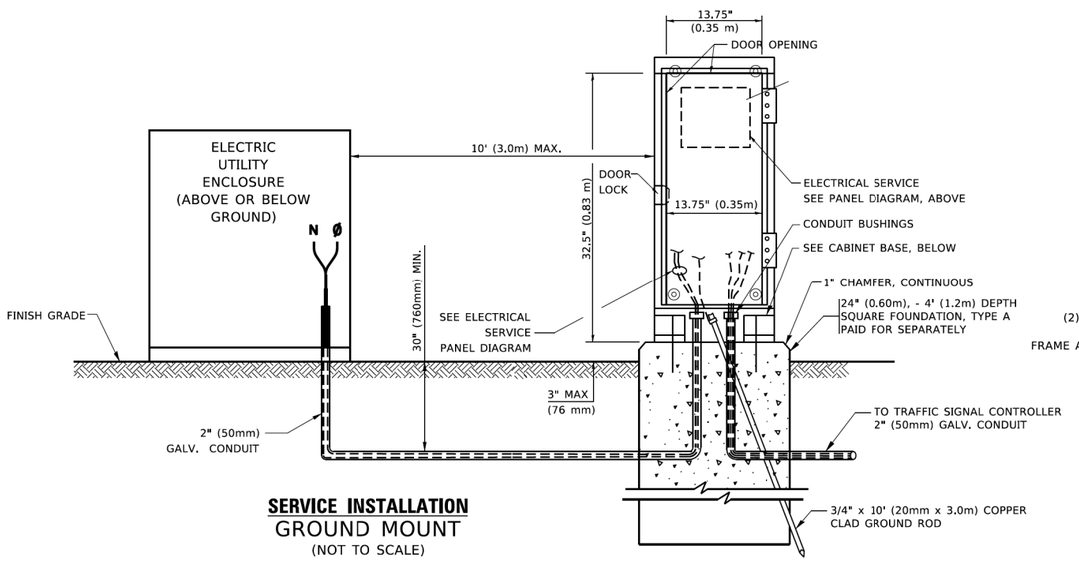

SERVICE INSTALLATION

GROUND MOUNT

(NOT TO SCALE)

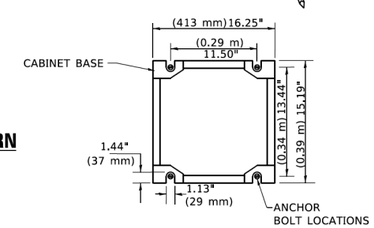

CABINET – BASE BOLT PATTERN

(NOT TO SCALE)

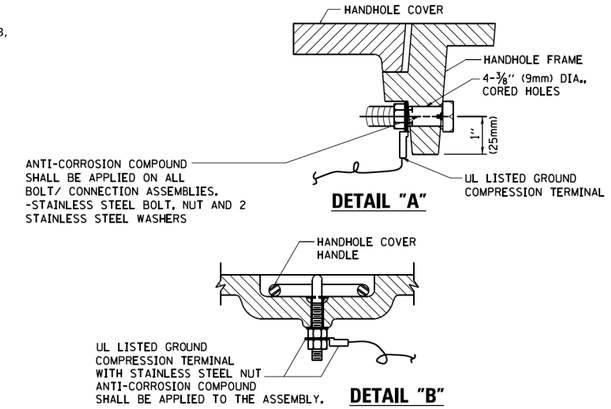

NOTES:

GROUNDING SYSTEM

1. THE GROUNDING SYSTEM SHALL CONSIST OF AN INSULATED CONDUCTOR TYPE XLP, NO. 6 A.W.G., STRANDED COPPER TO BE INSTALLED IN RACEWAYS. THE GROUNDING CABLE SHALL BE INSTALLED IN A CONTINUOUS MANNER AS SHOWN ON THE CABLE PLAN PROVIDED. ALL GROUNDING CONDUCTORS SHALL BE BONDED TO METAL ENCLOSURE (HANDHOLE, POST, MAST ARM, CONTROLLER, ETC,). GROUND ROD SHALL BE 3/4" DIA. x 10'-0" (20mm x 3.0m) LONG, COPPER CLAD. ONE GROUND ROD SHALL BE INSTALLED AT ALL POST FOUNDATIONS, POLE FOUNDATIONS, CONTROLLER CABINET FOUNDATION AND ELECTRICAL SERVICE INSTALLATION AS INDICATED ON THE CABLE PLAN. IF THERE ARE ANY SPECIAL CONDITIONS SUCH AS SUB-SURFACE CONDITIONS OR INSTALLATION PROBLEMS, THE RESIDENT ENGINEER SHALL BE NOTIFIED OR CONTACT THE BUREAU OF TRAFFIC, ILLINOIS DEPARTMENT OF TRANSPORTATION DISTRICT ONE AT (847) 705-4139.
2. THE NEUTRAL CONDUCTOR AND THE GROUND CONDUCTOR SHALL BE CONNECTED IN THE SERVICE INSTALLATION. AT NO OTHER POINT IN THE TRAFFIC SIGNAL SYSTEM SHALL THE NEUTRAL AND GROUND CONDUCTORS BE CONNECTED.
3. ALL EQUIPMENT GROUNDING CONDUCTORS SHALL TERMINATE AT THE GROUND BUS IN THE CONTROLLER CABINET.
4. THE CONTRACTOR SHALL PROVIDE A GROUND CABLE WITH CONNECTORS BETWEEN THE HANDHOLE COVER AND HANDHOLE FRAME.

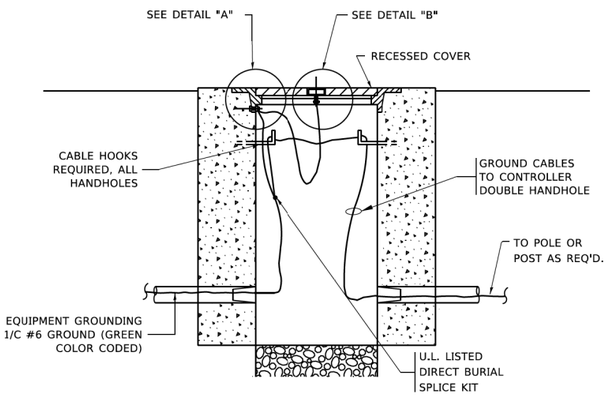

HANDHOLE COVER & FRAME – GROUNDING DETAIL

(NOT TO SCALE)

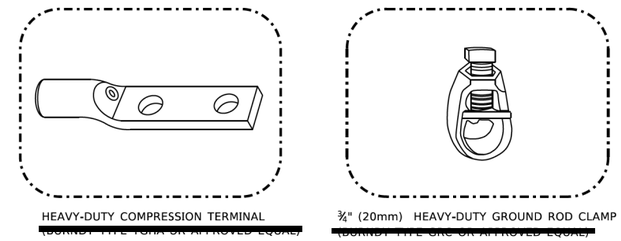

HEAVY-DUTY COMPRESSION TERMINAL ~~(BURNDY TYPE YGHA OR APPROVED EQUAL)~~

¾" (20mm) HEAVY-DUTY GROUND ROD CLAMP ~~(BURNDY TYPE GRC OR APPROVED EQUAL)~~

NOTES:

- ALL CLAMPS SHALL BE BRONZE OR COPPER, UL APPROVED.
- GROUND CABLE SHALL BE LOOPED OVER HOOKS IN THE HANDHOLES
  6.5' (2.0m) SLACK SHALL BE PROVIDED IN SINGLE HANDHOLES
  13' (4.0m) OF SLACK SHALL BE PROVIDED IN DOUBLE HANDHOLES.
  5' (1.4m) OF SLACK SHALL BE PROVIDED BETWEEN FRAME AND COVER.

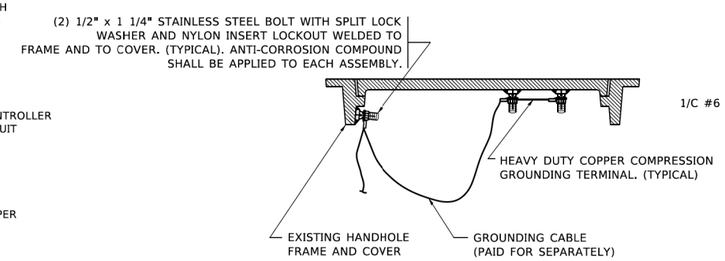

EXISTING HANDHOLE COVER & FRAME – GROUNDING DETAIL

(NOT TO SCALE)

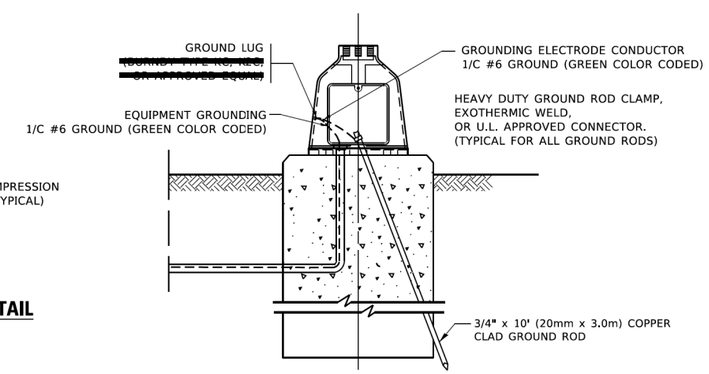

MAST ARM POLE /POST–GROUNDING DETAIL

(NOT TO SCALE)

USER NAME = footemj	DESIGNED -	REVISED -	
	DRAWN -	REVISED -	
PLOT SCALE = 50.0000 ' / in.	CHECKED -	REVISED -	
PLOT DATE = 3/4/2019	DATE -	REVISED -	

STATE OF ILLINOIS
DEPARTMENT OF TRANSPORTATION

DISTRICT ONE
STANDARD TRAFFIC SIGNAL DESIGN DETAILS

SCALE: NONE | SHEET 4 OF 7 SHEETS | STA. TO STA.

F.A. RTE.	SECTION	COUNTY	TOTAL SHEETS	SHEET NO.
2520	16-00078-00-CH	COOK	228	90
	TS–05	CONTRACT NO. 61K89		
	ILLINOIS	FED. AID PROJECT		

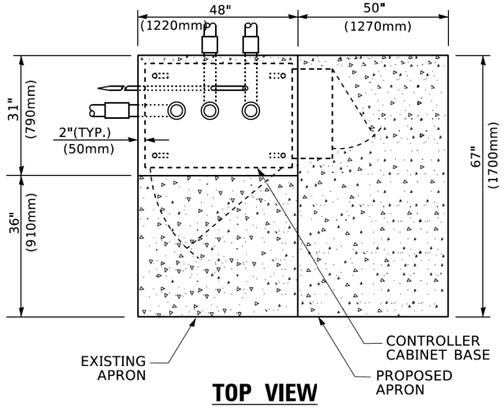

TOP VIEW

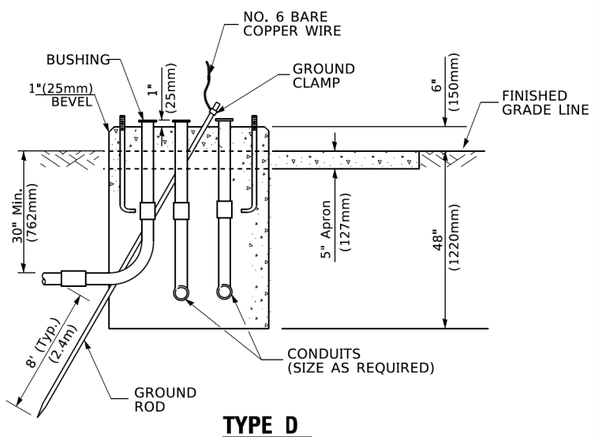

TYPE D
FOR GROUND MOUNTED
CONTROLLER CABINET
AND UPS BATTERY CABINET

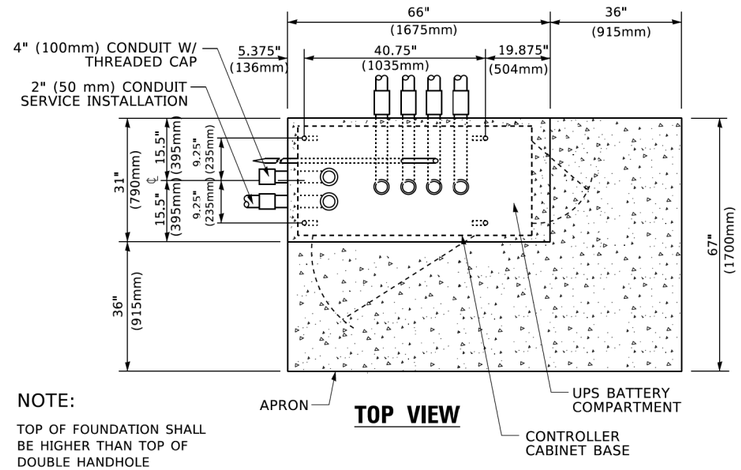

NOTE:

TOP OF FOUNDATION SHALL BE HIGHER THAN TOP OF DOUBLE HANDHOLE

TOP VIEW

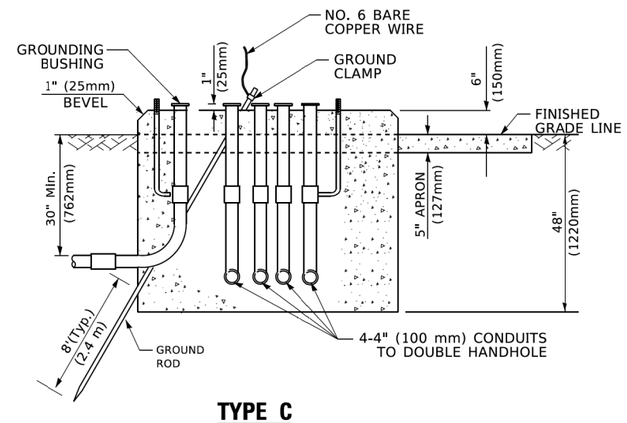

TYPE C
FOR GROUND MOUNTED
SUPER P (TYPE IV) AND SUPER R (TYPE V)
CONTROLLER CABINETS

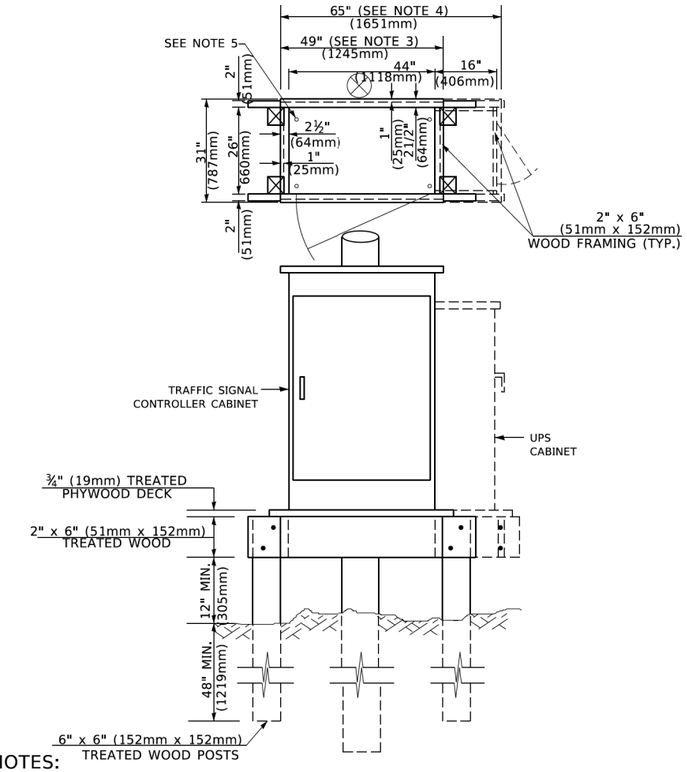

NOTES:

1. BASED ON CONTROLLER CABINET TYPE IV WITH BASE DIMENSIONS OF 26" x 44" (660mm x 1118mm). ADJUST PLATFORM SIZE TO FIT CABINET BASE DIMENSIONS BEING SUPPLIED
2. BASED ON UNINTERRUPTIBLE POWER SUPPLY CABINET WITH BASE DIMENSIONS OF 16" x 25" (406mm x 635mm). ADJUST PLATFORM SIZE TO FIT CABINET BASE DIMENSIONS BEING SUPPLIED.
3. PLATFORM SIZE FOR CONTROLLER CABINET TYPE IV.
4. PLATFORM SIZE FOR CONTROLLER CABINET TYPE IV AND UNINTERRUPTIBLE POWER SUPPLY CABINET.
5. DRILLED HOLES THROUGH THE PLATFORM BASE TO MATCH THE CONTROLLER CABINET BOLT TEMPLATE. FASTEN THE CONTROLLER CABINET TO THE PLATFORM WITH CARRIAGE BOLTS, WASHERS AND NUTS.
6. FASTEN ALL SUPPORT WOOD FRAMING TO THE WOOD POSTS WITH 2 LAG SCREWS FOR EACH CONNECTION..

TEMPORARY SIGNAL CONTROLLER
WOOD SUPPORT PLATFORM

CABLE SLACK LENGTH	FEET	METER
HANDHOLE	6.5	2.0
DOUBLE HANDHOLE	13.0	4.0
SIGNAL POST	2.0	0.6
MAST ARM	2.0	0.6
CONTROLLER CABINET	1.5	0.5
FIBER OPTIC AT CABINET	13.0	4.0
ELECTRIC SERVICE AT (CABINET OR SERVICE LOCATION)	1.5	0.5
GROUND CABLE (SIGNAL POST, MAST ARM, CABINET)	1.5	0.5
GROUND CABLE (BETWEEN FRAME AND COVER)	5.0	1.6

CABLE SLACK

VERTICAL CABLE LENGTH	FEET	METER
MAST ARM POLE (MAST ARM MOUNTED SIGNAL HEAD) (L = MAST ARM LENGTH - DISTANCE TO SIGNAL HEAD FROM END OF ARM)	20.0+L	6.0+L
BRACKET MOUNTED (MAST ARM POLE OR SIGNAL POLE)	13.0	4.0
PEDESTRIAN PUSH BUTTON	6.0	2.0
SERVICE INSTALLATION POLE MOUNT TO SERVICE DROP	13.5	4.1
SERVICE INSTALLATION POLE MOUNT TO GROUND	13.5	4.1
SERVICE INSTALLATION GROUND MOUNT	6.0	2.0
FOUNDATION (SIGNAL POST, MAST ARM POLE, CONTROLLER CABINET, SERVICE-GROUND MOUNT)	3.0	1.0

VERTICAL CABLE LENGTH

FOUNDATION	DEPTH
TYPE A - Signal Post	4'-0" (1.2m)
TYPE C - CONTROLLER W/ UPS	4'-0" (1.2m)
TYPE D - CONTROLLER	4'-0" (1.2m)
SERVICE INSTALLATION, GROUND MOUNT, TYPE A - SQUARE	4'-0" (1.2m)

DEPTH OF FOUNDATION

Mast Arm Length	① Foundation Depth	Foundation Diameter	Spiral Diameter	Quantity of Rebars	Size of Rebars
Less than 30' (9.1 m)	10'-0" (3.0 m)	30" (750mm)	24" (600mm)	8	6(19)
Greater than or equal to 30' (9.1 m) and less than 40' (12.2 m)	13'-6" (4.1 m)	30" (750mm)	24" (600mm)	8	6(19)
	11'-0" (3.4 m)	36" (900mm)	30" (750mm)	12	7(22)
Greater than or equal to 40' (12.2 m) and less than 50' (15.2 m)	13'-0" (4.0 m)	36" (900mm)	30" (750mm)	12	7(22)
Greater than or equal to 50' (15.2 m) and up to 55' (16.8 m)	15'-0" (4.6 m)	36" (900mm)	30" (750mm)	12	7(22)
Greater than or equal to 56' (16.8 m) and less than 65' (19.8 m)	21'-0" (6.4 m)	42" (1060mm)	36" (900mm)	16	8(25)
Greater than or equal to 65' (19.8 m) and up to 75' (22.9 m)	25'-0" (7.6 m)	42" (1060mm)	36" (900mm)	16	8(25)

NOTES:

1. These foundation depths are for sites which have cohesive soils (clayey silt, sandy clay, etc.) along the length of the shaft, with an average Unconfined Compressive Strength (Qu) > 1.0 tsf (100 kpa). This strength shall be verified by boring data prior to construction or with testing by the Engineer during foundation drilling. The Bureau of Bridges & structures should be contacted for a revised design if other conditions are encountered.
2. Combination mast arm assemblies under 55 feet (16.8 m) shall use 36" (900 mm) diameter foundations.
3. Combination mast arm assemblies under 56 feet (16.8 m) through 75 feet (22.9 m) shall use 42" (1060 mm) diameter foundations
4. For mast arm assemblies with dual arms refer to state standard 878001..

DEPTH OF MAST ARM FOUNDATIONS, TYPE E

USER NAME = footemj	DESIGNED -	REVISED -
	DRAWN -	REVISED -
PLOT SCALE = 50.0000 ' / in.	CHECKED -	REVISED -
PLOT DATE = 3/4/2019	DATE -	REVISED -

STATE OF ILLINOIS
DEPARTMENT OF TRANSPORTATION

DISTRICT ONE
STANDARD TRAFFIC SIGNAL DESIGN DETAILS

SCALE: NONE | SHEET 5 OF 7 SHEETS | STA. TO STA.

F.A. RTE.	SECTION	COUNTY	TOTAL SHEETS	SHEET NO.
2520	16-00078-00-CH	COOK	228	91
	TS-05	CONTRACT NO. 61K89		
	ILLINOIS	FED. AID PROJECT		

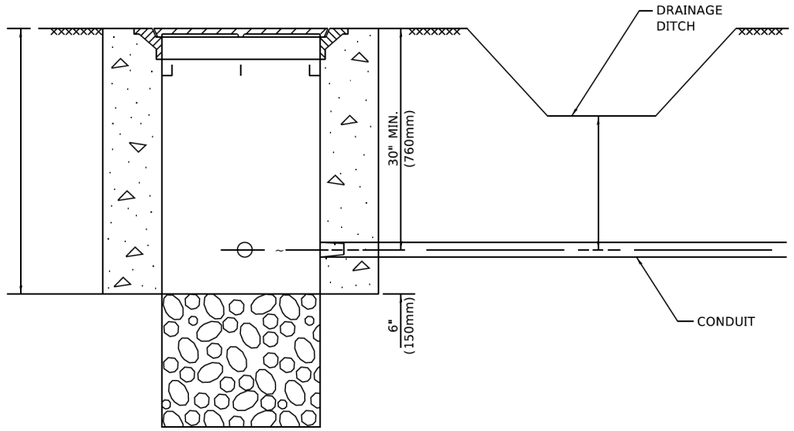

NOTES:

1. CONDUIT DEPTH SHALL BE A MINIMUM OF 30" (760mm) BELOW THE BOTTOM OF THE DRAINAGE DITCH OR ANY SLOPING GROUND
2. THE MINIMUM CONDUIT DEPTH APPLIES TO ALL CONDUIT PLACED UNDER ROADWAY PAVEMENT, MULTI-USE PATHS, SIDEWALKS AND SOIL SURFACES.
3. THE MINIMUM CONDUIT DEPTH APPLIES TO ALL HANDHOLES, HEAVY DUTY HANDHOLES AND DOUBLE HANDHOLES.

HANDHOLE WITH MINIMUM CONDUIT DEPTH

(NOT TO SCALE)

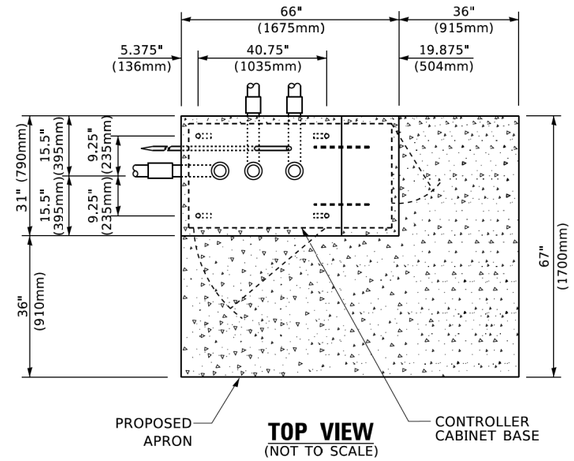

TOP VIEW

(NOT TO SCALE)

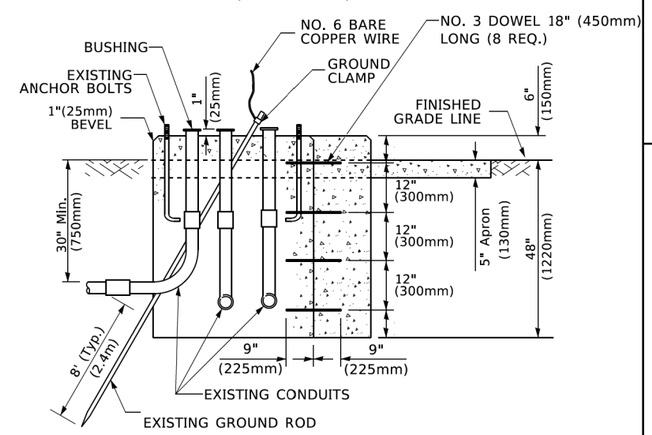

MODIFY EXISTING TYPE "D" FOUNDATION TO TYPE "C" FOUNDATION

(NOT TO SCALE)

NOTE:

SUPPORT EXISTING CABINET AND CONTROL EQUIPMENT ABOVE FOUNDATION TO KEEP TRAFFIC SIGNAL FUNCTIONING WHILE FOUNDATION MODIFICATION WORK IS PROCEEDING.

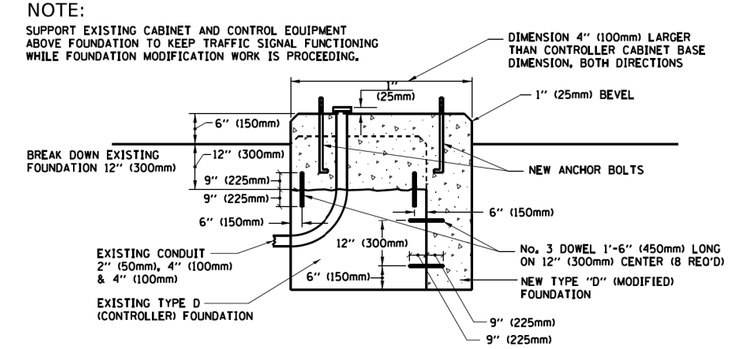

MODIFY EXISTING TYPE "D" FOUNDATION

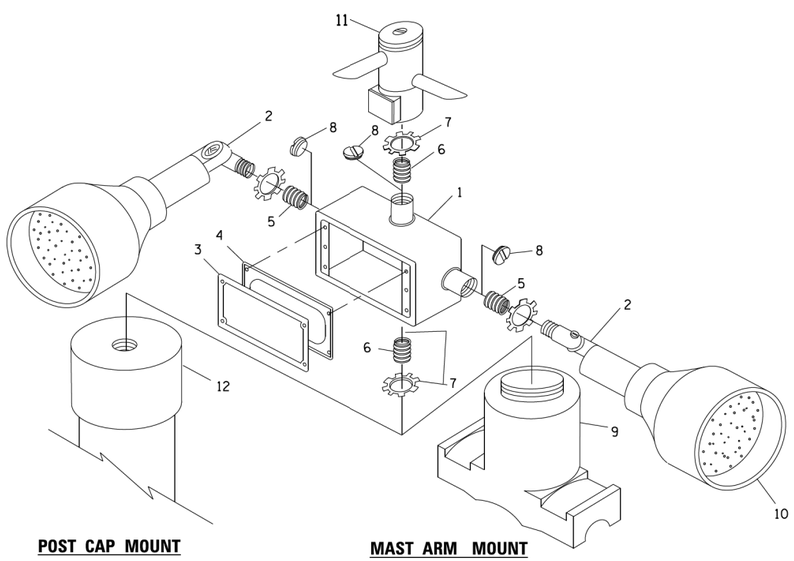

POST CAP MOUNT

MAST ARM MOUNT

EMERGENCY VEHICLE DETECTOR WITH CONFIRMATION BEACON MOUNTING DETAIL

ITEM NO.	IDENTIFICATION
1	OUTLET BOX- GALV. 21 CU.IN. (0.000344 CU-M)
2	LAMP HOLDER AND COVER
3	OUTLET BOX COVER
4	RUBBER COVER GASKET
5	REDUCING BUSHING
6	¾"(19 mm) CLOSE NIPPLE
7	¾"(19 mm) LOCKNUT
8	¾"(19 mm) HOLE PLUG
9	SADDLE BRACKET - GALV.
10	6 WATT PAR 38 LED FLOOD LAMP
11	DETECTOR UNIT
12	POST CAP [18 FT. (5.4 m) POST MIN.]

NOTES:

1. ALL ELECTRICAL ITEMS, EXCEPT ITEMS #2 AND #11 SHALL BE ALUMINUM OR GALVANIZED
2. ~~ITEM #1- OZ/GEDNEY FSX 1-50 OR EQUIVALENT~~
   ~~ITEM #2- MULBERRY CONN.-SHADE LAMP SHIELD OR EQUIVALENT~~
   ~~ITEM #9- BAND-IT - SADDLE BRACKET OR EQUIVALENT~~
3. WHEN POST MOUNTING IS SPECIFIED, ITEM #9 SHALL NOT BE REQUIRED. THE DETECTION UNIT SHALL BE MOUNTED DIRECTLY ON TOP OF THE CAP BY DRILLING AND TAPPING A 3/4 "(19 mm) HOLE WITH PIPE THREADS. THE POST CAP SHALL EITHER BE SCREWED TO THE TOP OF THE POST OR A MINIMUM OF 3 TIGHTENING SCREWS SHALL BE REQUIRED ON EACH CAP.

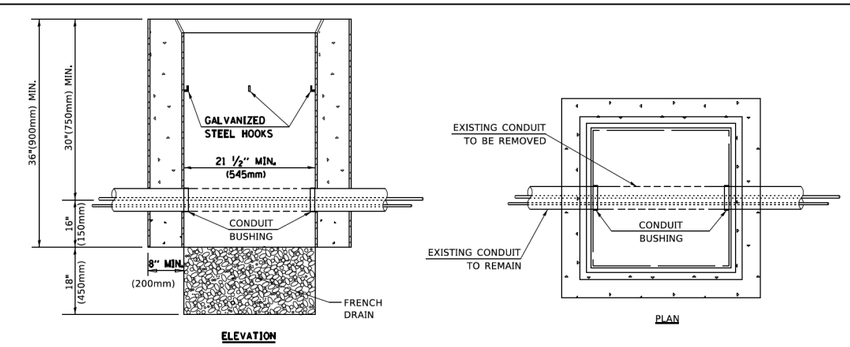

NOTES:

1. HANDHOLE CONSTRUCTED PER STATE STANDARD 814001.
2. REMOVAL OF THE EXISTING CONDUIT FROM THE HANDHOLE AND THE INSTALLATION OF THE CONDUIT BUSHINGS SHALL BE INCLUDED WITH THE COST OF THE HANDHOLE.

HANDHOLE TO INTERCEPT EXISTING CONDUIT

USER NAME = footemj	DESIGNED -	REVISED -
	DRAWN -	REVISED -
PLOT SCALE = 50.0000 ' / in.	CHECKED -	REVISED -
PLOT DATE = 3/4/2019	DATE -	REVISED -

STATE OF ILLINOIS
DEPARTMENT OF TRANSPORTATION

DISTRICT ONE
STANDARD TRAFFIC SIGNAL DESIGN DETAILS

SCALE: NONE | SHEET 6 OF 7 SHEETS | STA. TO STA.

F.A. RTE.	SECTION	COUNTY	TOTAL SHEETS	SHEET NO.
2520	16-00078-00-CH	COOK	228	92
	TS-05	CONTRACT NO. 61K89		

ILLINOIS FED. AID PROJECT

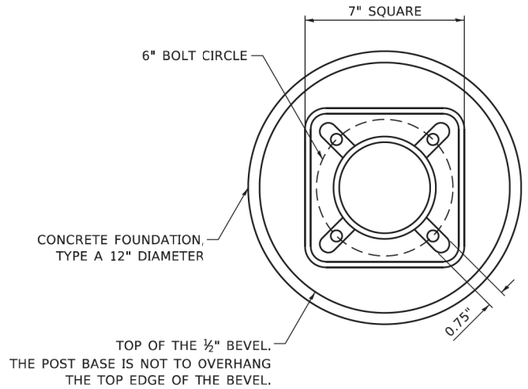

BOLT PATTERN

NOTE:

1. IF THE PEDESTRIAN SIGNAL POST FOUNDATION IS INSTALLED WITHIN OR BEHIND A BARRIER CURB, THE TOP OF THE FOUNDATION SHALL BE INSTALLED FLUSH WITH THE TOP OF THE BARRIER CURB.

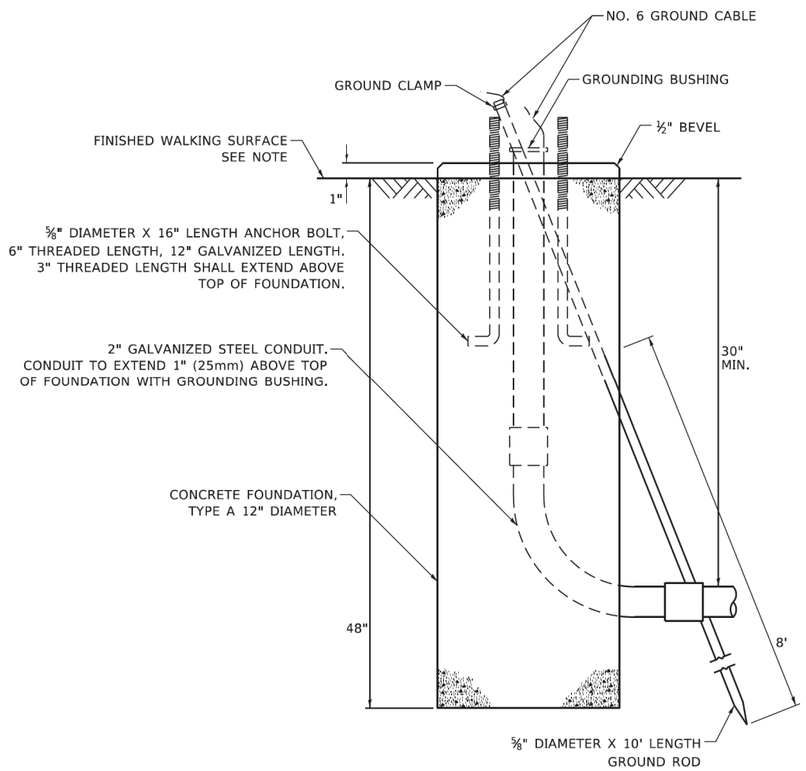

CONCRETE FOUNDATION, TYPE A 12–INCH DIAMETER

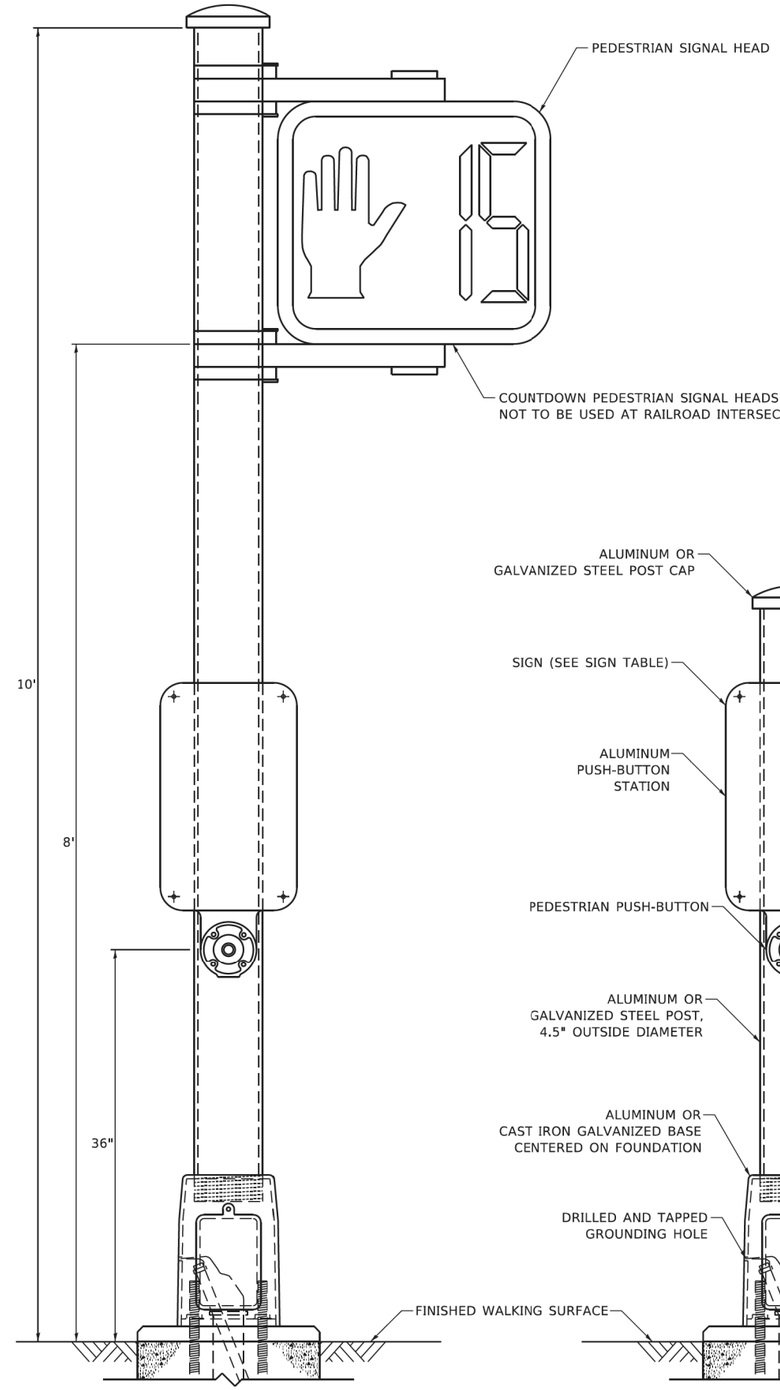

PEDESTRIAN SIGNAL POST, 10 FT.

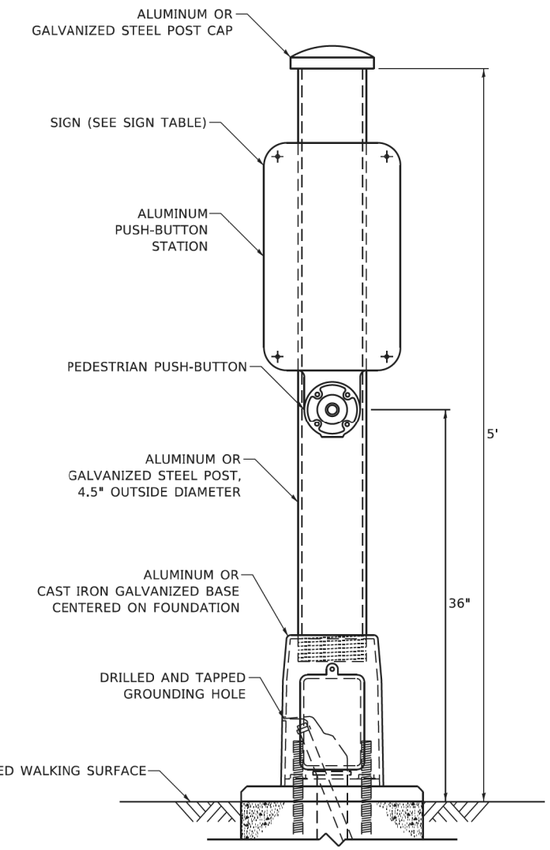

PEDESTRIAN SIGNAL POST, 5 FT.

R10-3b R10-3d R10-3e

SIGN TABLE

SIGN	DIMENSIONS
R10-3b (RAILROAD ONLY)	9" X 12"
R10-3d (RAILROAD ONLY)	9" X 12"
R10-3e	9" X 15"

NOTES:

1. THE SIGN PANELS SHALL BE TYPE AP SHEETING.
2. THE ARROW ON SIGNS FOR PUSH-BUTTONS SERVING TWO DIRECTIONS ON THE SAME PHASE SHALL BE BI-DIRECTIONAL.
3. THE SIGN FOR DUAL-CALL PUSH-BUTTONS SHALL HAVE NO ARROW.

USER NAME = plascencia	DESIGNED - IP	REVISED - 10/15/2020	
	DRAWN - IP	REVISED -	
PLOT SCALE = 100.0000 ' / in.	CHECKED - LP	REVISED -	
PLOT DATE = 11/17/2020	DATE - 10/15/2018	REVISED -	

STATE OF ILLINOIS
DEPARTMENT OF TRANSPORTATION

DISTRICT ONE
STANDARD TRAFFIC SIGNAL DESIGN DETAILS

SCALE: NTS | SHEET NO. 7 OF 7 SHEETS | STA. | TO STA.

F.A. RTE.	SECTION	COUNTY	TOTAL SHEETS	SHEET NO.
2520	16-00078-00-CH	COOK	228	93
	TS–05	CONTRACT NO. 61K89		
	ILLINOIS	FED. AID PROJECT		

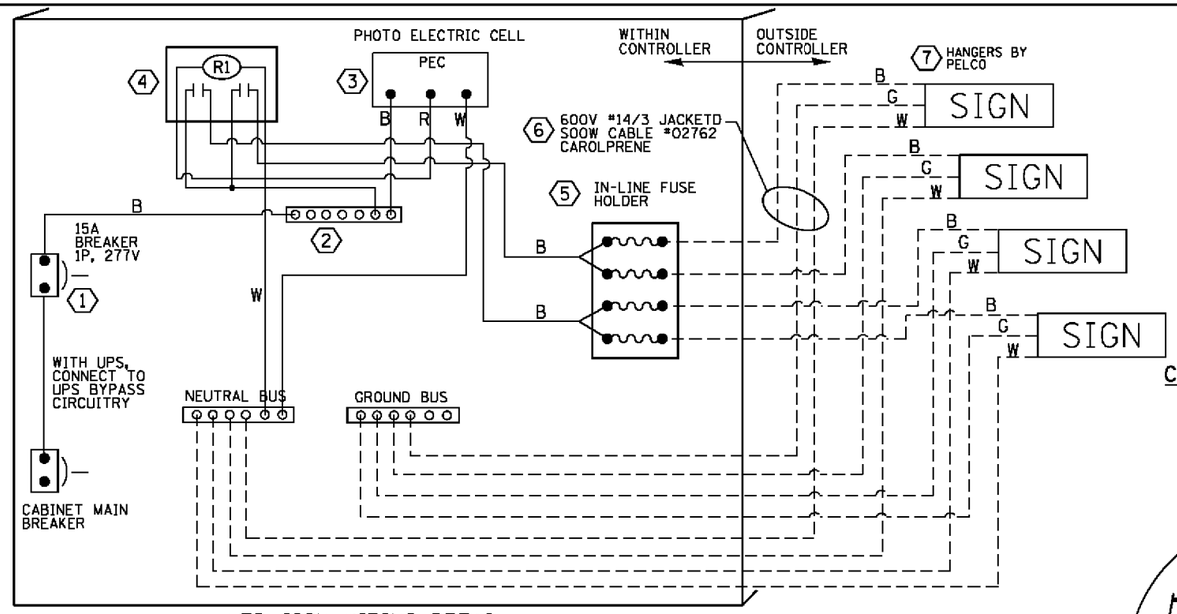

LED SIGN WIRING DETAIL

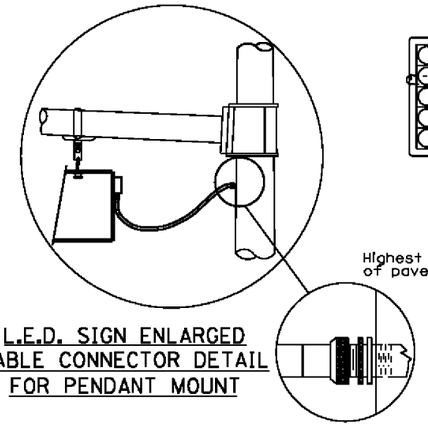

L.E.D. SIGN ENLARGED CABLE CONNECTOR DETAIL FOR PENDANT MOUNT

L.E.D. SIGN ENLARGED CABLE CONNECTOR DETAIL

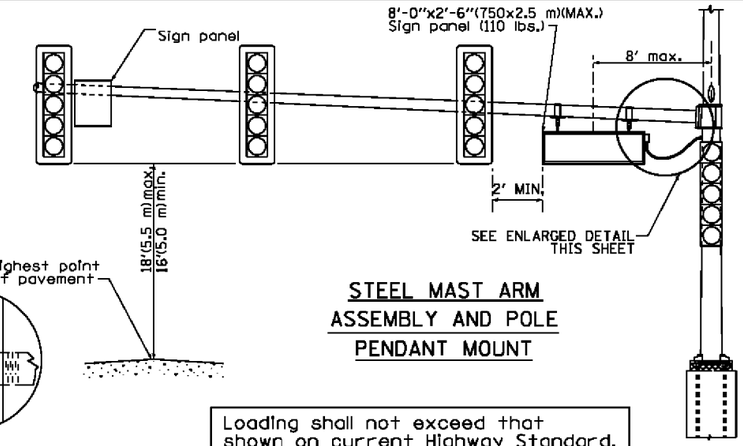

STEEL MAST ARM ASSEMBLY AND POLE PENDANT MOUNT

Loading shall not exceed that shown on current Highway Standard.

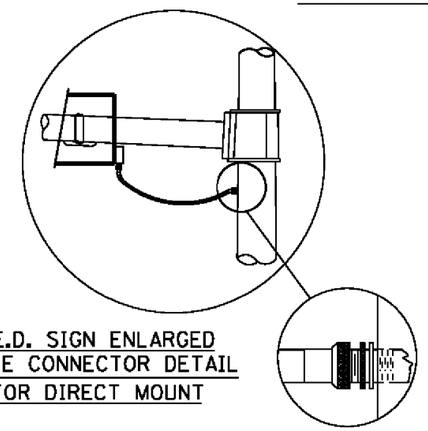

L.E.D. SIGN ENLARGED CABLE CONNECTOR DETAIL FOR DIRECT MOUNT

L.E.D. SIGN ENLARGED CABLE CONNECTOR DETAIL

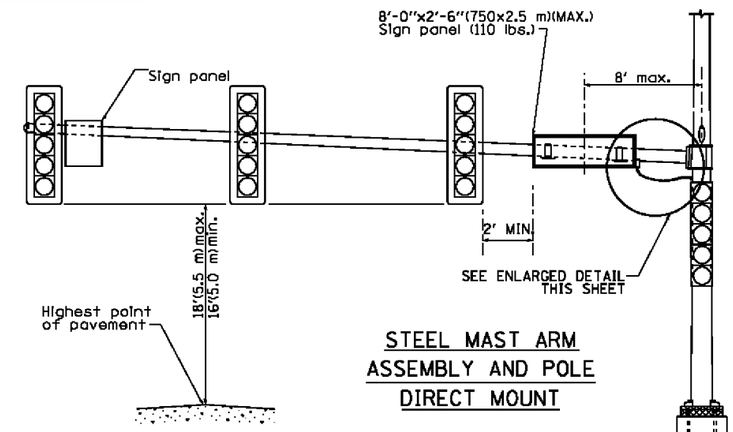

STEEL MAST ARM ASSEMBLY AND POLE DIRECT MOUNT

Loading shall not exceed that shown on current Highway Standard.

BILL OF MATERIALS

DESCRIPTION	MANUFACTURER	MODEL	NOTES
1 CIRCUIT BREAKER		~~15 AMPERE~~	Molded case, Thermal Mag. min. R.I. of 14K R.M.S. symmetrical ampere at 277V.
2 TERMINAL BLOCK	~~MARATHON~~	~~1502 BUSY~~	
3 PHOTO ELECTRIC CONTROL	~~FISHER PIERCE~~	~~B124 1.5 CT702~~	
4 CONTROL RELAY	~~SQUARE D~~	~~8501KU20V02~~	BOLT ON W/SCREW TERMINAL
5 INLINE FUSE HOLDER WITH 5 AMP FUSE	~~BUSSMAN~~	~~S-3030-BK/S-5-1-R~~	
6 ELECTRIC CABLE, NO. 14, 3/C (BLACK, WHITE, GREEN)	~~CAROLPRENE/600W~~	~~02762~~	
7 SIGN MOUNTING HARDWARE	~~PELCO~~	Pendant ~~(SE 5015)~~ Direct mount ~~(AB 8104-L SP)~~ Additional sign stiffeners may be required for direct mounted signs.	S.S. HARDWARE

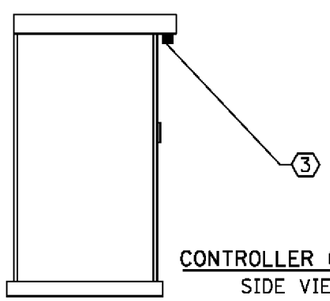

CONTROLLER CABINET
SIDE VIEW

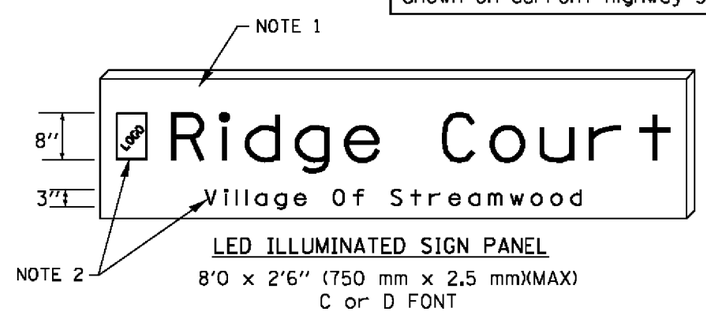

LED ILLUMINATED SIGN PANEL
8'0 x 2'6" (750 mm x 2.5 mm)(MAX)
C or D FONT

NOTES:

1. SIGNS SHALL BE SIGNLE SIDED FOR DIRECT MOUNT AND DOUBLE SIDED FOR PENDANT MOUNT.
2. CERTAIN ADDITIONAL INFORMATION MAY BE ALLOWED ON THE SIGN. VERIFY WITH ENGINEER.
3. SIGNS SHALL NOT BE ENERGIZED WHEN TRAFFIC SIGNALS ARE POWERED BY THE UPS. THE SIGNS SHALL BE CONNECTED TO THE UPS BYPASS CIRCUITRY.
4. ALL WIRING WITHIN THE CABINET SHALL BE COLOR CODED AS INDICATED:
   R = RED BL = BLUE W = WHITE
   B = BLACK Y = YELLOW G = GREEN
5. ALL 120 VOLT SYSTEM AND ALL CONTROL WIRING SHALL BE #12AWG STRANDED UNLESS OTHERWISE INDICATED.
6. ALL WIRING SHALL BE NEATLY DRESSED AND SUPPORTED.

SIGN LEGEND:

Ⓐ

LEFT ON
GREEN
ARROW
ONLY

R10-5
30" x 36"
2-REQUIRED
(SIGNS INCLUDED IN THE COST OF
TEMPORARY TRAFFIC SIGNAL INSTALLATION)

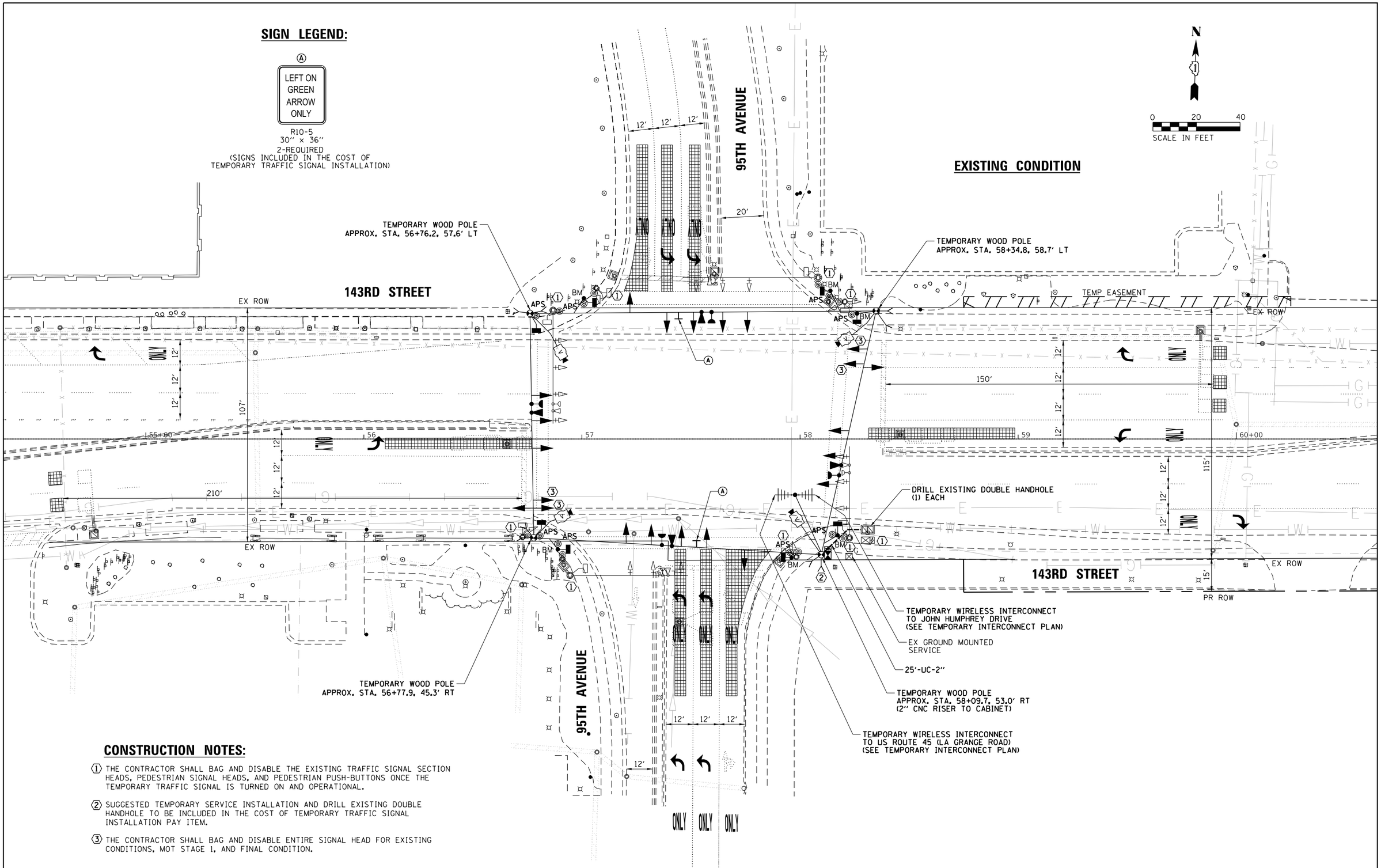

CONSTRUCTION NOTES:

1. THE CONTRACTOR SHALL BAG AND DISABLE THE EXISTING TRAFFIC SIGNAL SECTION HEADS, PEDESTRIAN SIGNAL HEADS, AND PEDESTRIAN PUSH-BUTTONS ONCE THE TEMPORARY TRAFFIC SIGNAL IS TURNED ON AND OPERATIONAL.

2. SUGGESTED TEMPORARY SERVICE INSTALLATION AND DRILL EXISTING DOUBLE HANDHOLE TO BE INCLUDED IN THE COST OF TEMPORARY TRAFFIC SIGNAL INSTALLATION PAY ITEM.

3. THE CONTRACTOR SHALL BAG AND DISABLE ENTIRE SIGNAL HEAD FOR EXISTING CONDITIONS, MOT STAGE 1, AND FINAL CONDITION.

CHRISTOPHER B. BURKE ENGINEERING, LTD.
9575 W. Higgins Road, Suite 600
Rosemont, Illinois 60018
(847) 823-0500

USER NAME = dtroyer	DESIGNED -	REVISED -	
	DRAWN -	REVISED -	
PLOT SCALE = 40.0000 ' / in.	CHECKED -	REVISED -	
PLOT DATE = 12/3/2024	DATE - 12/03/24	REVISED -	

STATE OF ILLINOIS
DEPARTMENT OF TRANSPORTATION

TEMPORARY TRAFFIC SIGNAL INSTALLATION PLAN
EXISTING CONDITION
143RD STREET AT 95TH AVENUE

SCALE: 1" = 20' | SHEET OF SHEETS | STA. TO STA.

F.A.U. RTE.	SECTION	COUNTY	TOTAL SHEETS	SHEET NO.
2520	16-00078-00-CH	COOK	228	95

CONTRACT NO. 61K89

ILLINOIS | FED. AID PROJECT

PLOT DRIVER = $PLTDRV$
PEN TABLE = $PENTBL$
FILE NAME = pw:\\patrick:co-pw.bentley.com:patrickco-pw-07\Documents\Orland Park\22277.005\12_Design\12.3_CADD\SHEETS\143HDs-ts-TS-10_95th-TMP.dgn

SIGN LEGEND:

Ⓐ

LEFT ON
GREEN
ARROW
ONLY

R10-5
30" x 36"
4-REQUIRED
(SIGNS INCLUDED IN THE COST OF
TEMPORARY TRAFFIC SIGNAL INSTALLATION)

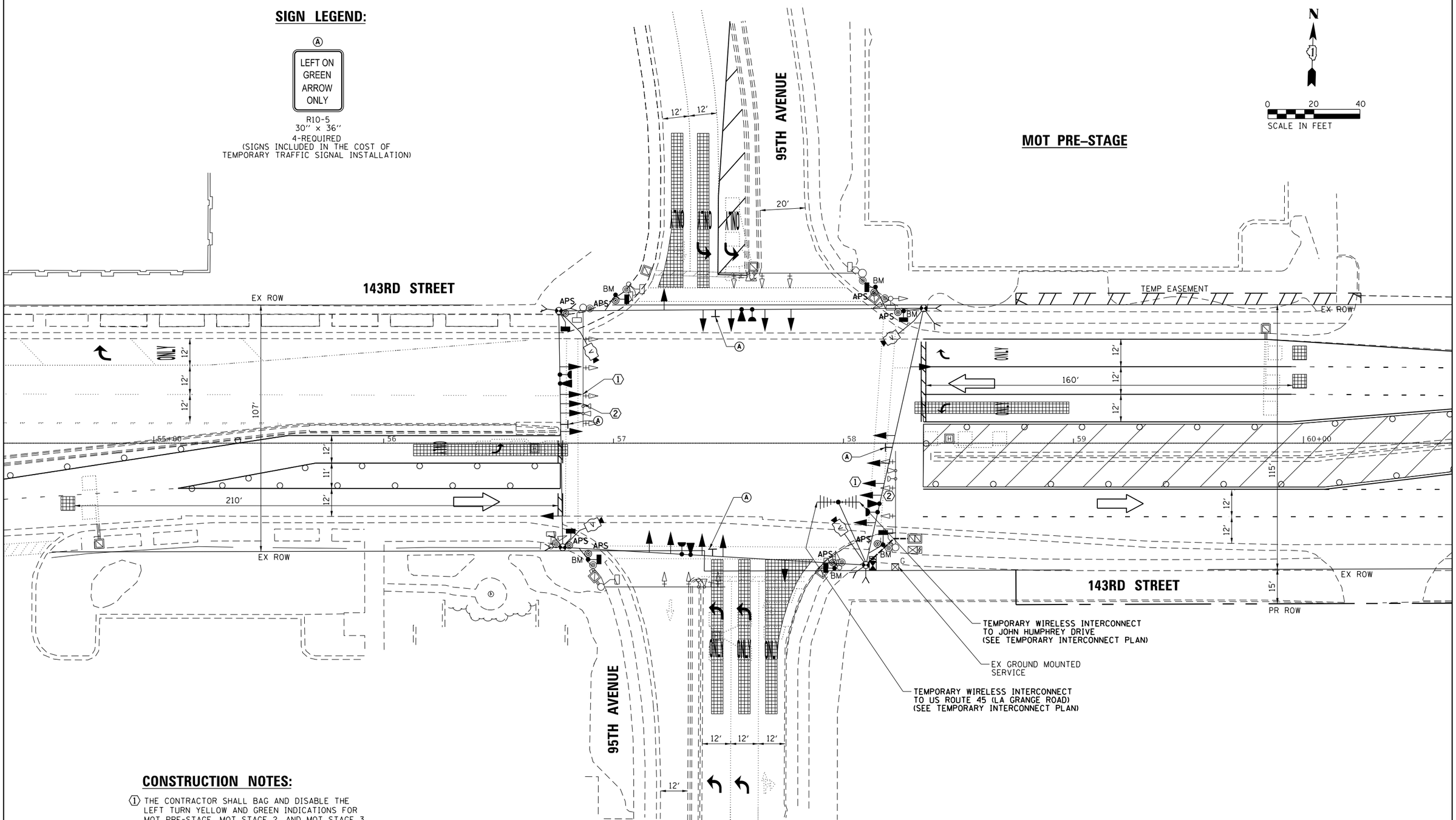

CONSTRUCTION NOTES:

1. THE CONTRACTOR SHALL BAG AND DISABLE THE LEFT TURN YELLOW AND GREEN INDICATIONS FOR MOT PRE-STAGE, MOT STAGE 2, AND MOT STAGE 3.

2. THE CONTRACTOR SHALL BAG ENTIRE SIGNAL HEAD SECTION FOR MOT PRE-STAGE, MOT STAGE 2, AND MOT STAGE 3.

PLOT DRIVER = $PLTDRV$LS
PEN TABLE = $PENTBL$LS
FILE NAME = pw:\\patrick:cc-pw.bentley.com:patrick:cc-pw-07\Documents\Orland Park\22277.005\12_Design\12.3_CADD\SHEETS\143HD-sht-TS-11_95th-PRE-Stg.dgn

CHRISTOPHER B. BURKE ENGINEERING, LTD.
9575 W. Higgins Road, Suite 600
Rosemont, Illinois 60018
(847) 823-0500

USER NAME = dtroyer	DESIGNED -	REVISED -	
	DRAWN -	REVISED -	
PLOT SCALE = 40.0000 ' / in.	CHECKED -	REVISED -	
PLOT DATE = 12/3/2024	DATE - 12/03/24	REVISED -	

STATE OF ILLINOIS
DEPARTMENT OF TRANSPORTATION

TEMPORARY TRAFFIC SIGNAL INSTALLATION PLAN
MOT PRE-STAGE
143RD STREET AT 95TH AVENUE

SCALE: 1" = 20' | SHEET OF SHEETS | STA. TO STA.

F.A.U. RTE.	SECTION	COUNTY	TOTAL SHEETS	SHEET NO.
2520	16-00078-00-CH	COOK	228	96
		CONTRACT NO. 61K89		
		ILLINOIS	FED. AID PROJECT	

SIGN LEGEND:

Ⓐ

LEFT ON
GREEN
ARROW
ONLY

R10-5
30" x 36"
2-REQUIRED
(SIGNS INCLUDED IN THE COST OF
TEMPORARY TRAFFIC SIGNAL INSTALLATION)

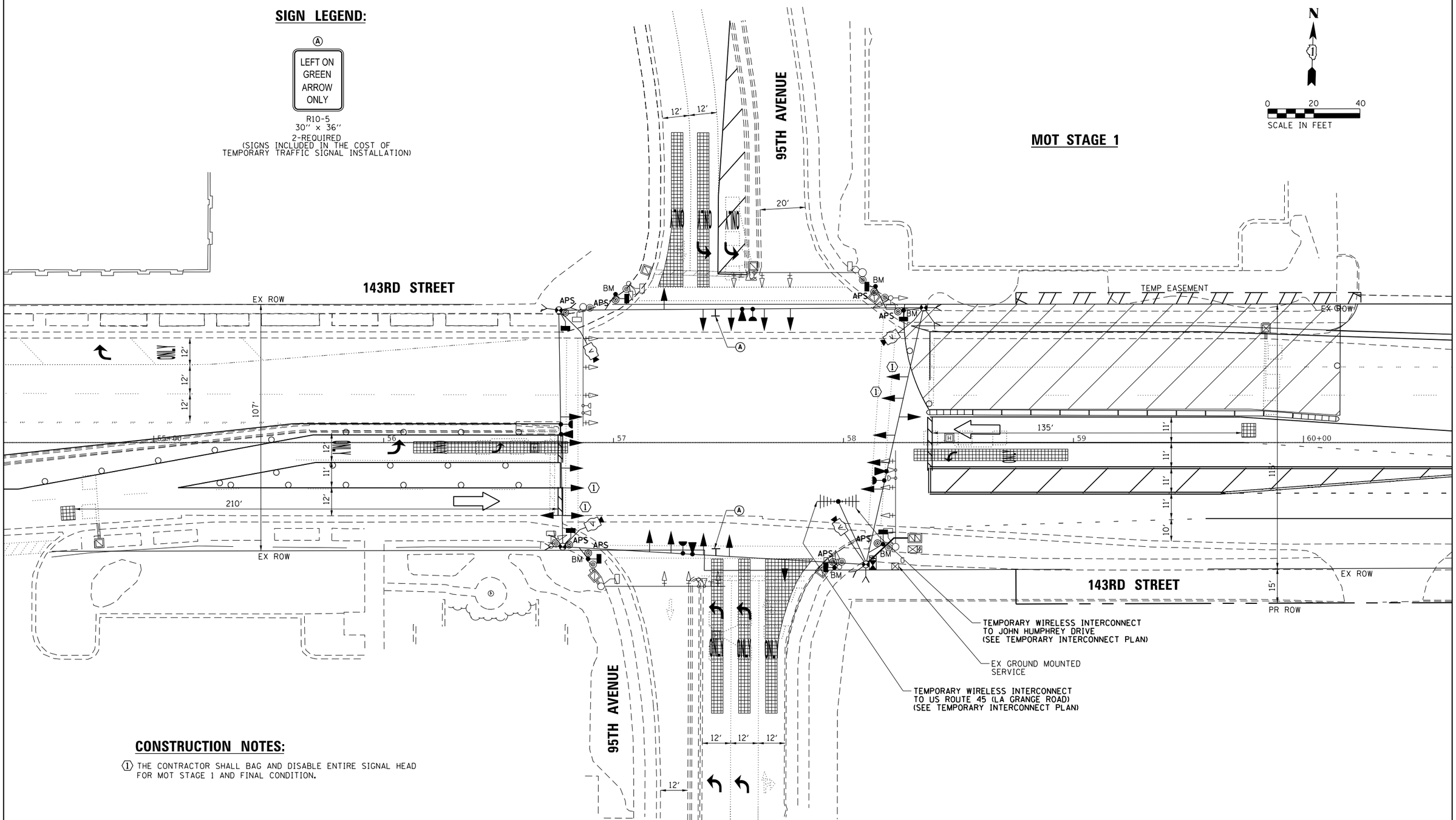

CONSTRUCTION NOTES:

1. THE CONTRACTOR SHALL BAG AND DISABLE ENTIRE SIGNAL HEAD FOR MOT STAGE 1 AND FINAL CONDITION.

PLOT DRIVER = SPLTDRVLS
PEN TABLE = SPENTBLLS
FILE NAME = pw:\\pathtico-pw.bentley.com:pathtico-pw-07\Documents\Orland Park\22277.005\12_Design\12.3_CADD\SHEETS\143HDsht1S-12_95th-MOT-Stg1.dgn

CHRISTOPHER B. BURKE ENGINEERING, LTD. 9575 W. Higgins Road, Suite 600 Rosemont, Illinois 60018 (847) 823-0500	USER NAME = dtroyer	DESIGNED -	REVISED -	STATE OF ILLINOIS DEPARTMENT OF TRANSPORTATION	TEMPORARY TRAFFIC SIGNAL INSTALLATION PLAN MOT STAGE 1 143RD STREET AT 95TH AVENUE
		DRAWN -	REVISED -		
	PLOT SCALE = 40.0000 ' / in.	CHECKED -	REVISED -		
	PLOT DATE = 12/3/2024	DATE - 12/03/24	REVISED -		SCALE: 1" = 20' SHEET OF SHEETS STA. TO STA.

F.A.U. RTE.	SECTION	COUNTY	TOTAL SHEETS	SHEET NO.
2520	16-00078-00-CH	COOK	228	97
		CONTRACT NO. 61K89		
	ILLINOIS	FED. AID PROJECT		

SIGN LEGEND:

Ⓐ

LEFT ON
GREEN
ARROW
ONLY

R10-5
30" x 36"
4-REQUIRED
(SIGNS INCLUDED IN THE COST OF
TEMPORARY TRAFFIC SIGNAL INSTALLATION)

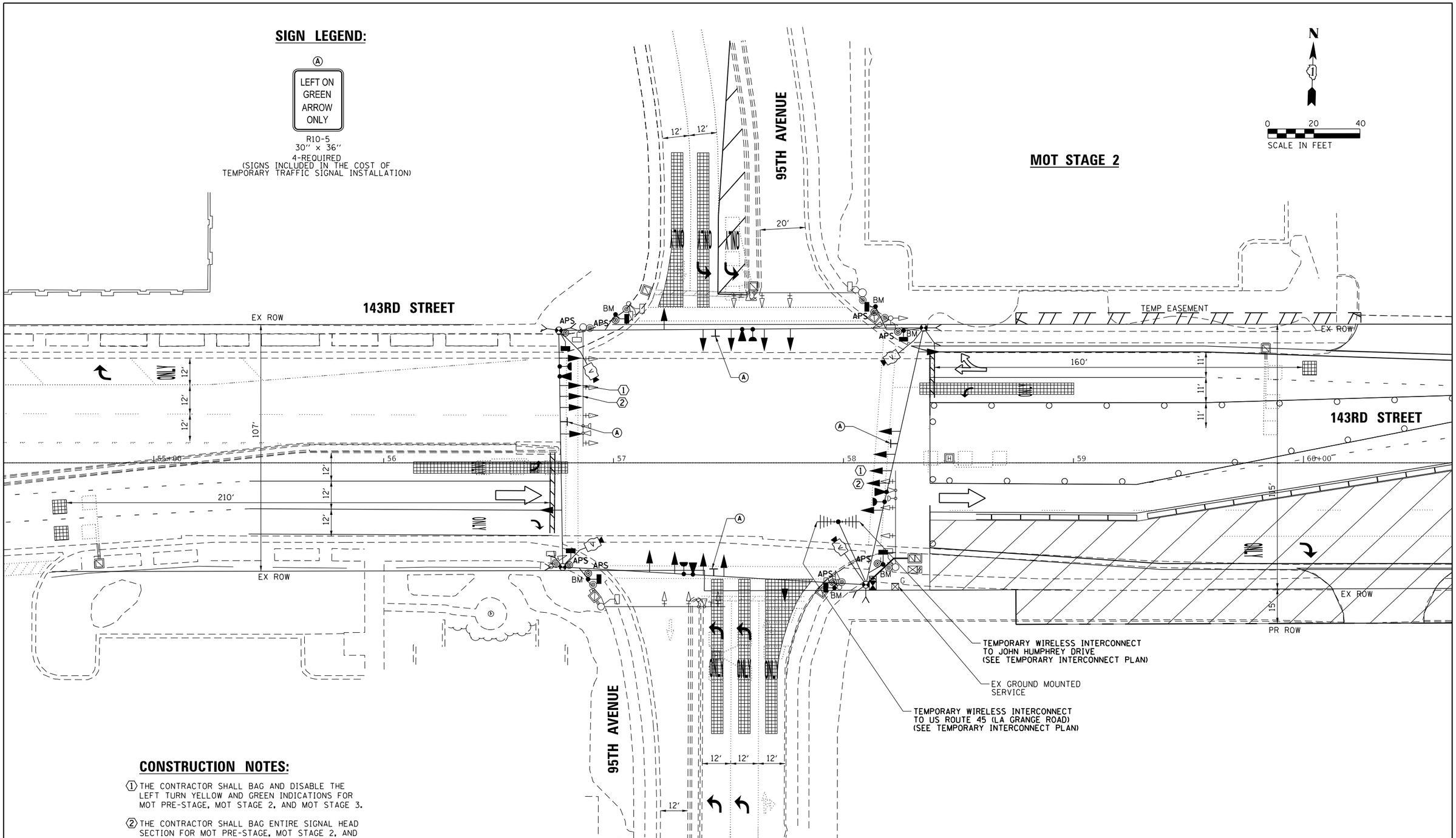

CONSTRUCTION NOTES:

1. THE CONTRACTOR SHALL BAG AND DISABLE THE LEFT TURN YELLOW AND GREEN INDICATIONS FOR MOT PRE-STAGE, MOT STAGE 2, AND MOT STAGE 3.

2. THE CONTRACTOR SHALL BAG ENTIRE SIGNAL HEAD SECTION FOR MOT PRE-STAGE, MOT STAGE 2, AND MOT STAGE 3.

PLOT DRIVER = $PLTDRVLS
PEN TABLE = $PENTBLLS
FILE NAME = pw:\\pathtec-pw.bentley.com:pathtec-pw-07\Documents\Orland Park\22277.005\12_Design\12.3_CADD\SHEETS\143HD-sht-TS-13_95th-MOT-Stg2.dgn

CHRISTOPHER B. BURKE ENGINEERING, LTD.
9575 W. Higgins Road, Suite 600
Rosemont, Illinois 60018
(847) 823-0500

USER NAME = dtroyer	DESIGNED -	REVISED -	
	DRAWN -	REVISED -	
PLOT SCALE = 40.0000 ' / in.	CHECKED -	REVISED -	
PLOT DATE = 12/3/2024	DATE - 12/03/24	REVISED -	

STATE OF ILLINOIS
DEPARTMENT OF TRANSPORTATION

TEMPORARY TRAFFIC SIGNAL INSTALLATION PLAN
MOT STAGE 2
143RD STREET AT 95TH AVENUE

SCALE: 1" = 20' | SHEET OF SHEETS | STA. TO STA.

F.A.U. RTE.	SECTION	COUNTY	TOTAL SHEETS	SHEET NO.
2520	16-00078-00-CH	COOK	228	98
		CONTRACT NO. 61K89		
		ILLINOIS	FED. AID PROJECT	

SIGN LEGEND:

Ⓐ

LEFT ON
GREEN
ARROW
ONLY

R10-5
30" x 36"
4-REQUIRED
(SIGNS INCLUDED IN THE COST OF
TEMPORARY TRAFFIC SIGNAL INSTALLATION)

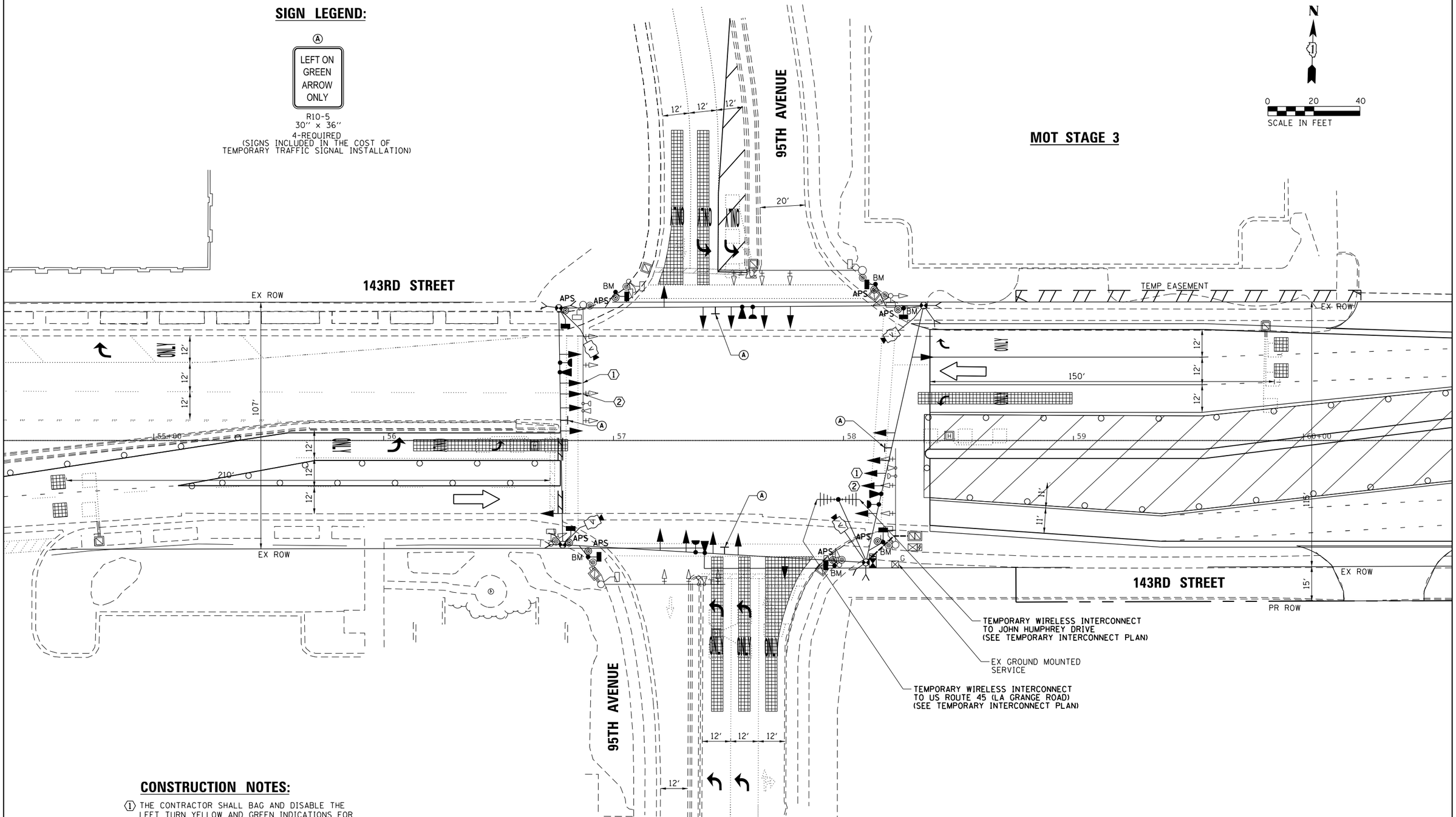

CONSTRUCTION NOTES:

1. THE CONTRACTOR SHALL BAG AND DISABLE THE LEFT TURN YELLOW AND GREEN INDICATIONS FOR MOT PRE-STAGE, MOT STAGE 2, AND MOT STAGE 3.

2. THE CONTRACTOR SHALL BAG ENTIRE SIGNAL HEAD SECTION FOR MOT PRE-STAGE, MOT STAGE 2, AND MOT STAGE 3.

PLOT DRIVER = $PLTDRVLS
PEN TABLE = $PENTBLLS
FILE NAME = pw://patrickco-pw.bentley.com:patrickco-pw-07/Documents/Orland Park\22277.005\12_Design\12-3_CADD\SHEETS\143\HD-sht-TS-14_95th-MOT-Stg3.dgn

CHRISTOPHER B. BURKE ENGINEERING, LTD.
9575 W. Higgins Road, Suite 600
Rosemont, Illinois 60018
(847) 823-0500

USER NAME = dtroyer	DESIGNED -	REVISED -	
	DRAWN -	REVISED -	
PLOT SCALE = 40.0000 ' / in.	CHECKED -	REVISED -	
PLOT DATE = 12/3/2024	DATE - 12/03/24	REVISED -	

STATE OF ILLINOIS
DEPARTMENT OF TRANSPORTATION

TEMPORARY TRAFFIC SIGNAL INSTALLATION PLAN
MOT STAGE 3
143RD STREET AT 95TH AVENUE

SCALE: 1" = 20' | SHEET OF SHEETS | STA. TO STA.

F.A.U. RTE.	SECTION	COUNTY	TOTAL SHEETS	SHEET NO.
2520	16-00078-00-CH	COOK	228	99
		CONTRACT NO. 61K89		
		ILLINOIS	FED. AID PROJECT	

SIGN LEGEND:

Ⓐ

LEFT ON GREEN ARROW ONLY

R10-5
30" x 36"
2-REQUIRED
(SIGNS INCLUDED IN THE COST OF TEMPORARY TRAFFIC SIGNAL INSTALLATION)

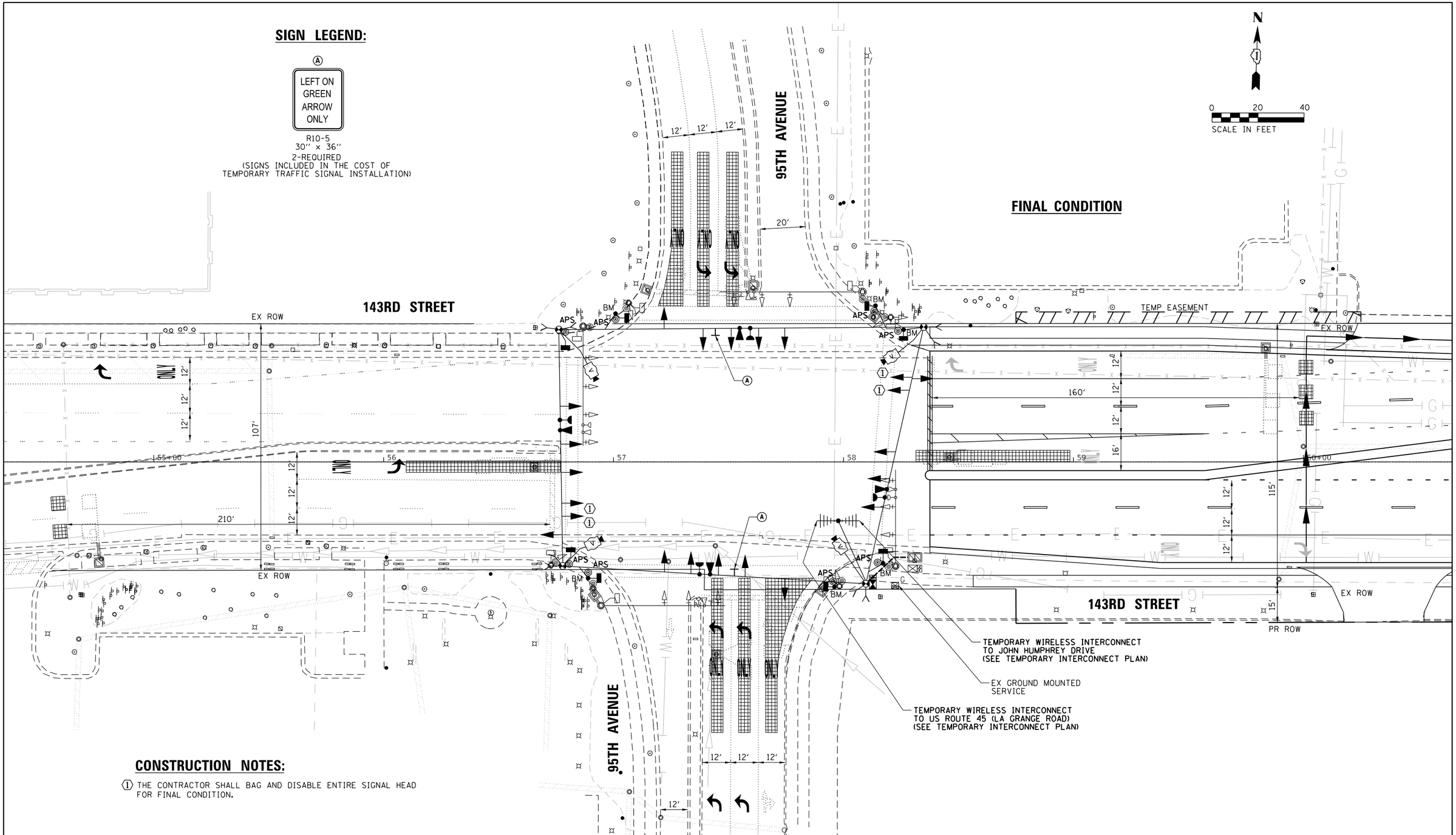

CONSTRUCTION NOTES:

1. THE CONTRACTOR SHALL BAG AND DISABLE ENTIRE SIGNAL HEAD FOR FINAL CONDITION.

PLOT DRIVER = $PLTDRV1S
PEN TABLE = $PENTBLLS
FILE NAME = pw:\\patrick:co-pw-bentley.com:patrick:co-pw-07\Documents\Orland Park\22277.005\12_Design\12.3_CADD\SHEETS\143HDsht-TS-15_95thsHOT-Final.dgn

CHRISTOPHER B. BURKE ENGINEERING, LTD.
9575 W. Higgins Road, Suite 600
Rosemont, Illinois 60018
(847) 823-0500

USER NAME = dtroyer	DESIGNED -	REVISED -	
	DRAWN -	REVISED -	
PLOT SCALE = 40.0000 ' / in.	CHECKED -	REVISED -	
PLOT DATE = 12/3/2024	DATE - 12/03/24	REVISED -	

STATE OF ILLINOIS
DEPARTMENT OF TRANSPORTATION

TEMPORARY TRAFFIC SIGNAL INSTALLATION PLAN
FINAL CONDITION
143RD STREET AT 95TH AVENUE

SCALE: 1" = 20' | SHEET OF SHEETS | STA. TO STA.

F.A.U. RTE.	SECTION	COUNTY	TOTAL SHEETS	SHEET NO.
2520	16-00078-00-CH	COOK	228	100

CONTRACT NO. 61K89

ILLINOIS | FED. AID PROJECT