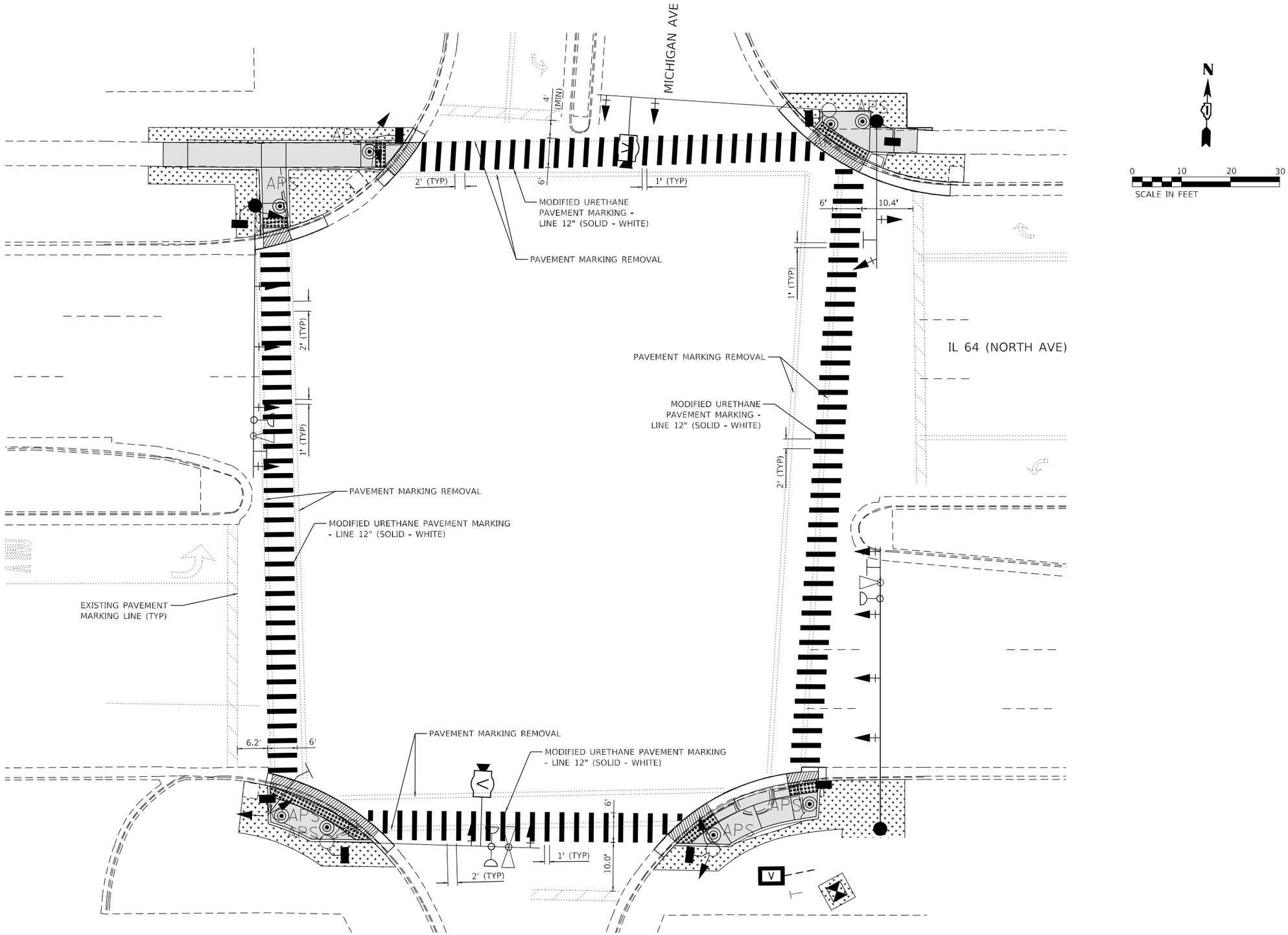

MODEL: Default
FILE NAME: pw:\\jk-pw.bentley.com:ch-pw-01\Documents\01 Active Projects\MW-CI-S-68959100 - IL 64\Phase III\2 Design\CADD\Plan Sheets\Roadway\D108121-sht-PMK-2b_KHA.dgn

Kimley»Horn

© 2023 KIMLEY-HORN AND ASSOCIATES, INC.
4201 WINFIELD ROAD, SUITE 600
WARRENVILLE, IL 60555
PHONE: 630-487-5550
WWW.KIMLEY-HORN.COM

USER NAME =	DESIGNED -	REVISED -
	DRAWN -	REVISED -
PLOT SCALE =	CHECKED -	REVISED -
PLOT DATE =	DATE -	REVISED -

STATE OF ILLINOIS
DEPARTMENT OF TRANSPORTATION

PAVEMENT MARKING PLAN
IL 64 (NORTH AVE) AND MICHIGAN AVE

SCALE: 1" = 10' | SHEET OF SHEETS | STA. TO STA.

F.A.P. RTE.	SECTION	COUNTY	TOTAL SHEETS	SHEET NO.
307	2020-263-SUR,SW&TS	DUPAGE	529	101

CONTRACT NO. 62N33

ILLINOIS | FED. AID PROJECT

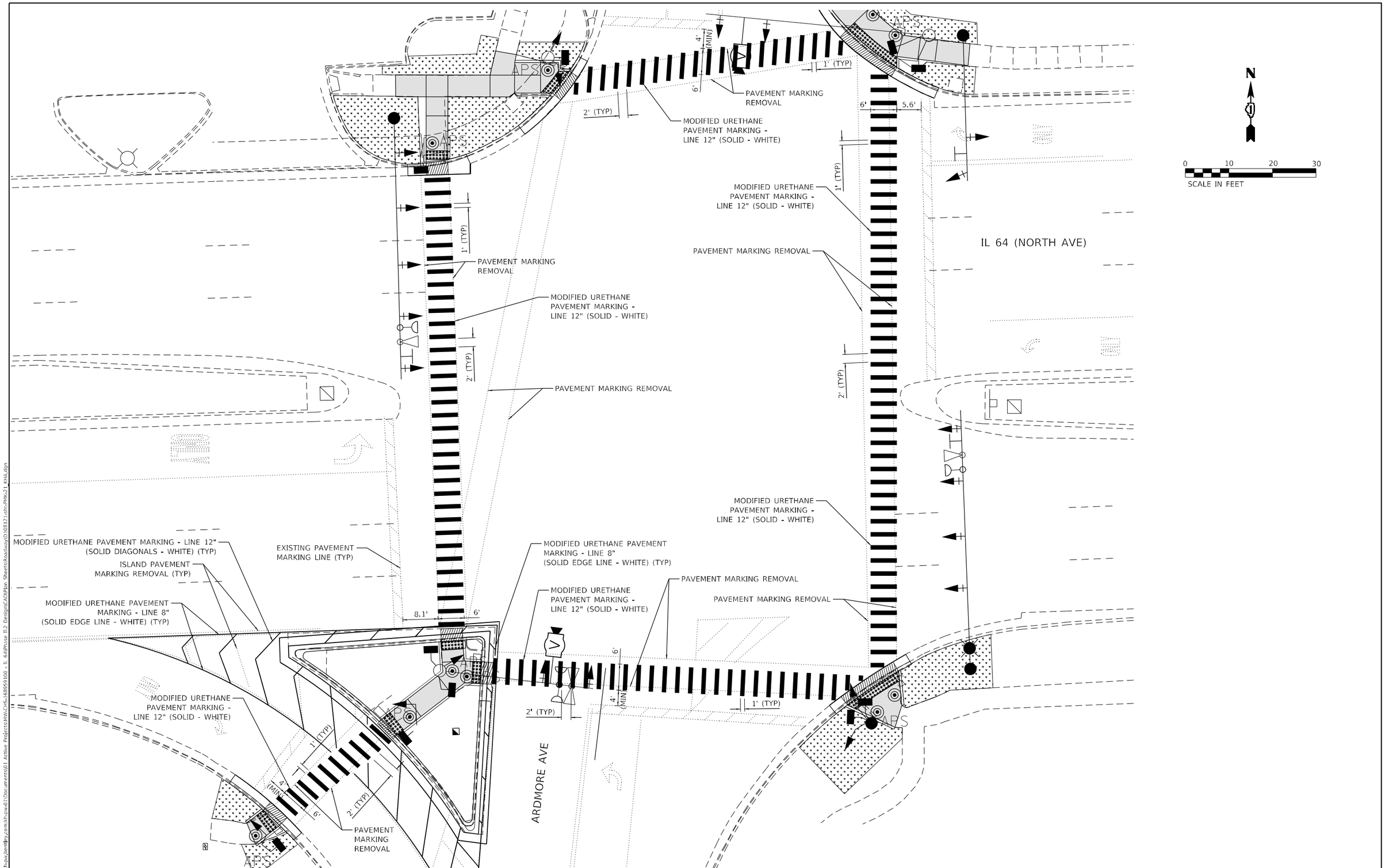

Kimley»Horn	USER NAME =	DESIGNED -	REVISED -	STATE OF ILLINOIS DEPARTMENT OF TRANSPORTATION	PAVEMENT MARKING PLAN IL 64 (NORTH AVE) AND ARDMORE AVE	F.A.P. RTE.	SECTION	COUNTY	TOTAL SHEETS	SHEET NO.
© 2023 KIMLEY-HORN AND ASSOCIATES, INC. 4201 WINFIELD ROAD, SUITE 601 WARRENVILLE, IL 60555 PHONE: 630-487-5550 WWW.KIMLEY-HORN.COM		DRAWN -	REVISED -			307	2020-263-SUR,SW&TS	DUPAGE	529	102
	PLOT SCALE =	CHECKED -	REVISED -					CONTRACT NO. 62N33		
	PLOT DATE =	DATE -	REVISED -		SCALE: 1" = 10' SHEET OF SHEETS STA. TO STA.		ILLINOIS	FED. AID PROJECT		

MODEL: Default
FILE NAME: pw:\\lh-pw.bentley.com:lh-pw-01\Documents\01 Active Projects\IVC-CHS-168859100 - IL 64\Phase II 2 Design\CAD\Plan Sheets\Roadway\D108121-sht-PMK-21_KHA.dgn

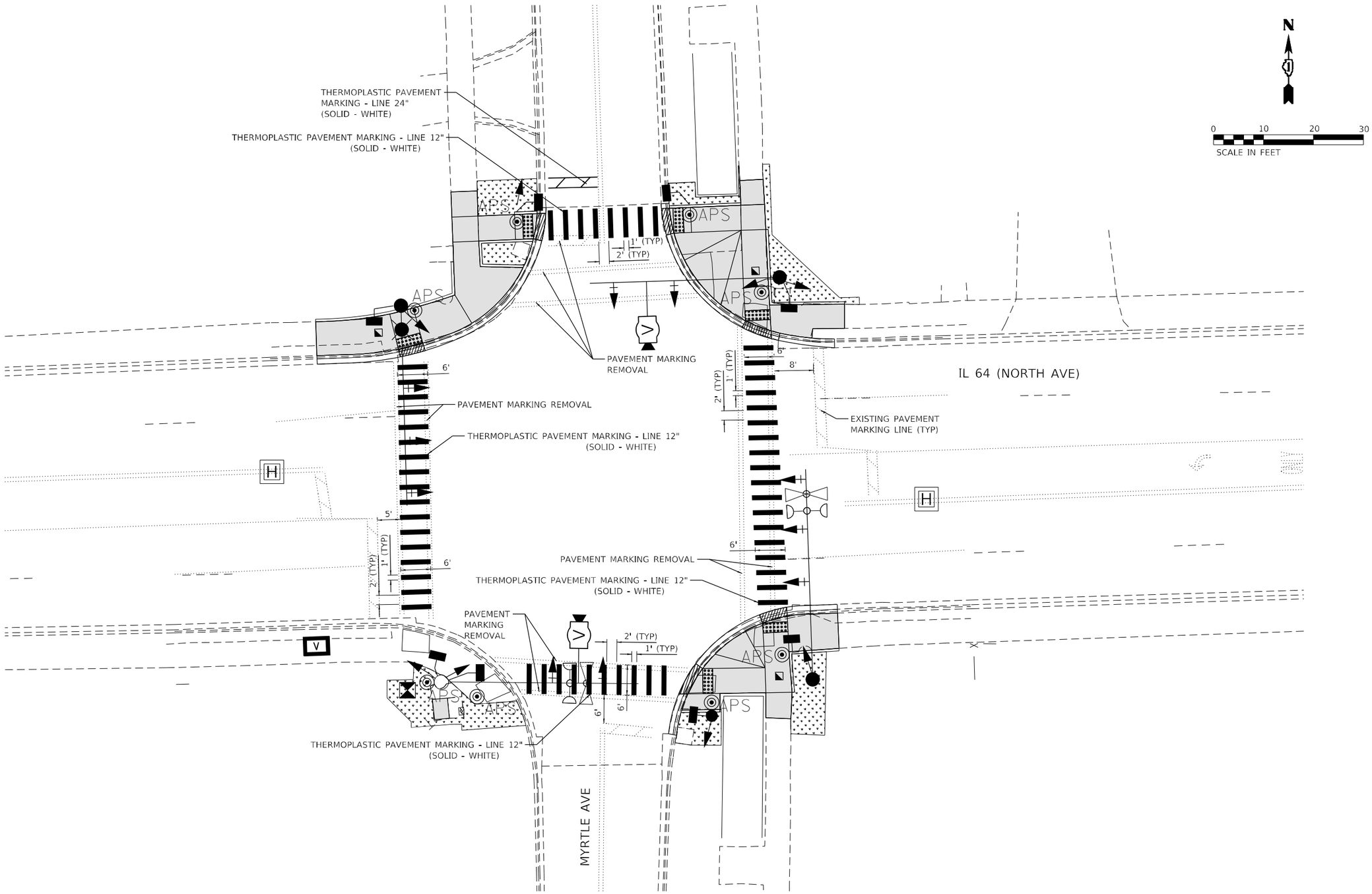

MODEL: Default
FILE NAME: pw:\\kh-pw.bentley.com:kh-pw401\Documents\01 Active Projects\HW-CHS-168959100 - IL 64\Phase III\2 Design\CAD\Plan Sheets\Roadway\0108121-IN-PMK-22_KHA.dgn

Kimley»Horn
© 2022 KIMLEY-HORN AND ASSOCIATES, INC.
4201 WINFIELD ROAD, SUITE 600
WARRENVILLE, IL 60555
PHONE: 630-487-5550
WWW.KIMLEY-HORN.COM

USER NAME =	DESIGNED -	REVISED -
	DRAWN -	REVISED -
PLOT SCALE =	CHECKED -	REVISED -
PLOT DATE =	DATE -	REVISED -

STATE OF ILLINOIS
DEPARTMENT OF TRANSPORTATION

PAVEMENT MARKING PLAN
IL 64 (NORTH AVE) AND MYRTLE AVE

SCALE: 1" = 10' | SHEET OF SHEETS | STA. TO STA.

F.A.P. RTE.	SECTION	COUNTY	TOTAL SHEETS	SHEET NO.
307	2020-263-SUR,SW&TS	DUPAGE	529	102
		CONTRACT NO. 62N33		
		ILLINOIS	FED. AID PROJECT	

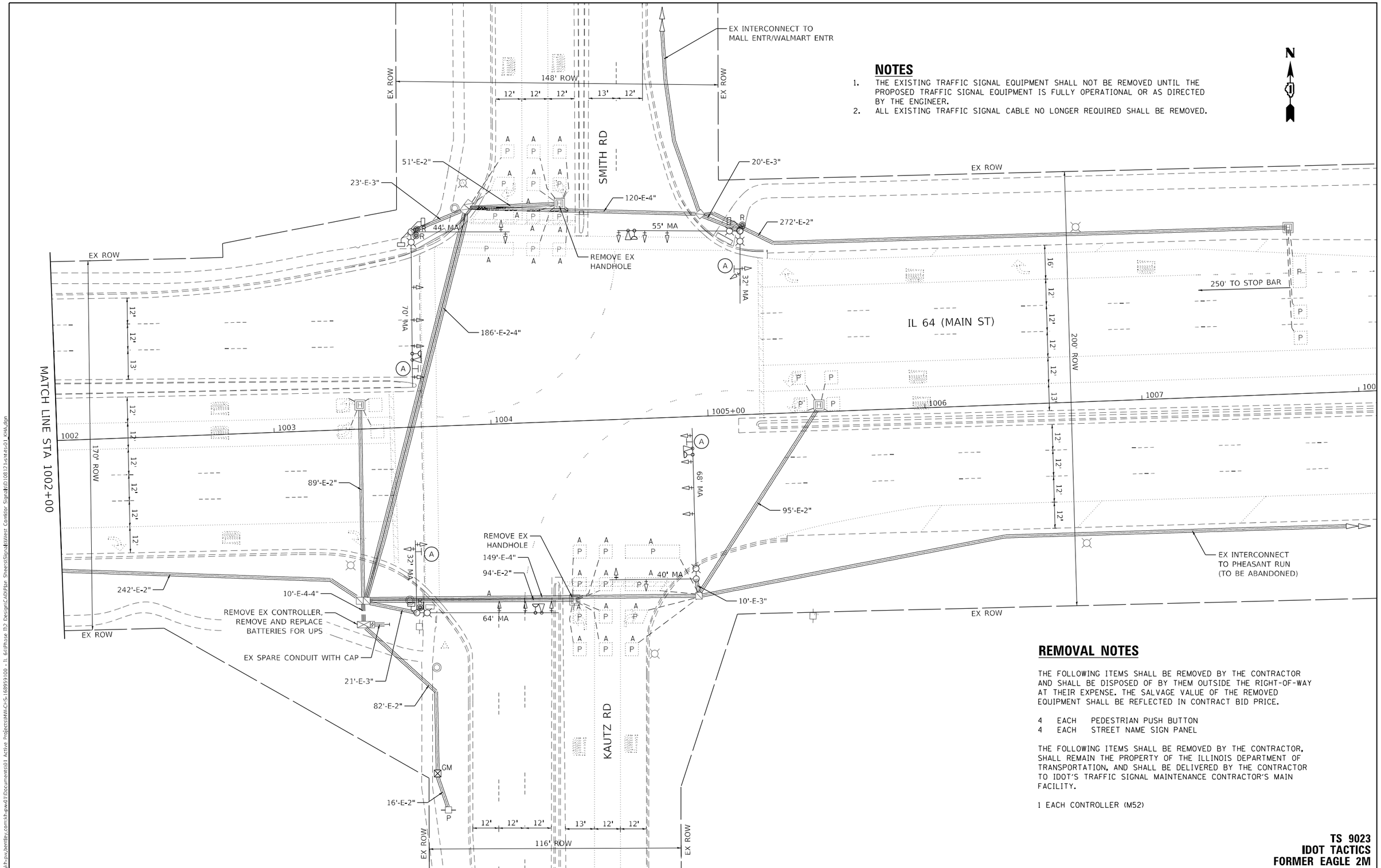

NOTES

1. THE EXISTING TRAFFIC SIGNAL EQUIPMENT SHALL NOT BE REMOVED UNTIL THE PROPOSED TRAFFIC SIGNAL EQUIPMENT IS FULLY OPERATIONAL OR AS DIRECTED BY THE ENGINEER.
2. ALL EXISTING TRAFFIC SIGNAL CABLE NO LONGER REQUIRED SHALL BE REMOVED.

REMOVAL NOTES

THE FOLLOWING ITEMS SHALL BE REMOVED BY THE CONTRACTOR AND SHALL BE DISPOSED OF BY THEM OUTSIDE THE RIGHT-OF-WAY AT THEIR EXPENSE. THE SALVAGE VALUE OF THE REMOVED EQUIPMENT SHALL BE REFLECTED IN CONTRACT BID PRICE.

4 EACH PEDESTRIAN PUSH BUTTON
4 EACH STREET NAME SIGN PANEL

THE FOLLOWING ITEMS SHALL BE REMOVED BY THE CONTRACTOR, SHALL REMAIN THE PROPERTY OF THE ILLINOIS DEPARTMENT OF TRANSPORTATION, AND SHALL BE DELIVERED BY THE CONTRACTOR TO IDOT'S TRAFFIC SIGNAL MAINTENANCE CONTRACTOR'S MAIN FACILITY.

1 EACH CONTROLLER (M52)

TS 9023
IDOT TACTICS
FORMER EAGLE 2M

MODEL: Default
FILE NAME: pw:\\uh-pw.bentley.com:uh-pw-01\Documents\01 Active Projects\MVCH5-168959100 - IL 64\Phase III Design\CAD\Plan Sheets\Signal\West Corridor Signal\10108121-sht-001.dgn

Kimley»Horn
© 2022 KIMLEY-HORN AND ASSOCIATES, INC.
4201 WINFIELD ROAD, SUITE 600
WARRENVILLE, IL 60555
PHONE: 630-487-5550
WWW.KIMLEY-HORN.COM

USER NAME =	DESIGNED -	REVISED -	
	DRAWN -	REVISED -	
PLOT SCALE =	CHECKED -	REVISED -	
PLOT DATE =	DATE -	REVISED -	

STATE OF ILLINOIS
DEPARTMENT OF TRANSPORTATION

TRAFFIC SIGNAL EQUIPMENT REMOVAL PLAN
IL 64 (MAIN ST) AND SMITH RD/KAUTZ RD

SCALE: 1" = 20' | SHEET OF SHEETS | STA. TO STA.

F.A.P. RTE.	SECTION	COUNTY	TOTAL SHEETS	SHEET NO.
307	2020-263-SUR,SW&TS	DUPAGE	529	104
		CONTRACT NO. 62N33		
	ILLINOIS	FED. AID PROJECT		

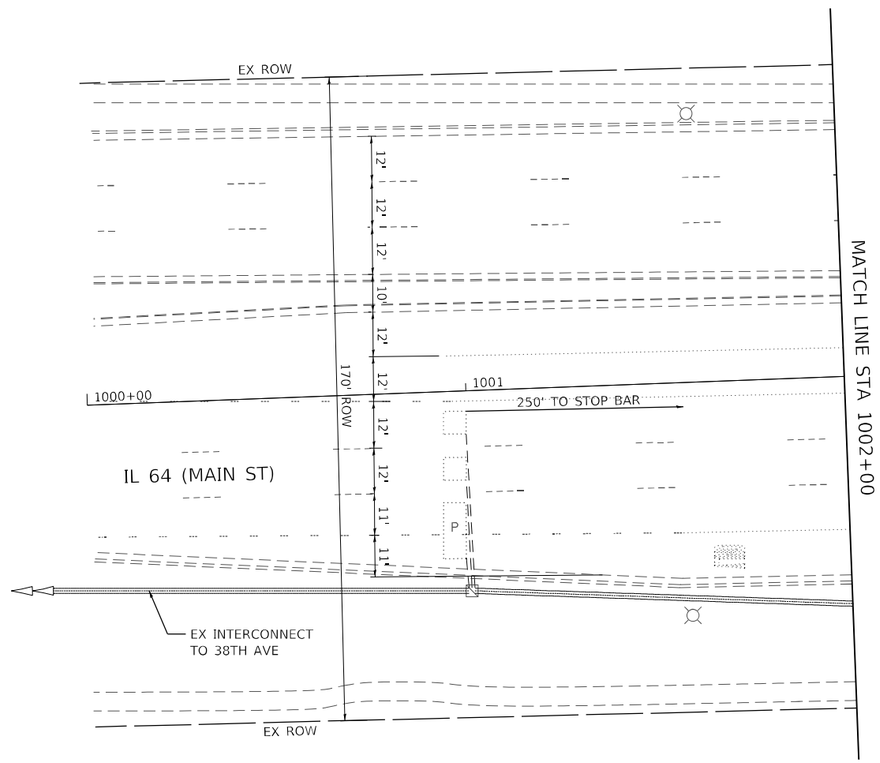

N

0 20 40 60

SCALE IN FEET

TS 9023
IDOT TACTICS
FORMER EAGLE 2M

MODEL: Default
FILE NAME: pw:\\ih-pw.bentley.com:ih-pw-01\Documents\01 Active Projects\MVCH5-168959100 - IL 64\Phase III\2 Design\CAD\Plan Sheets\Signal\West Corridor Signal\10108121-sht-02_KHA.dgn

Kimley»Horn
© 2022 KIMLEY-HORN AND ASSOCIATES, INC.
4201 WINFIELD ROAD, SUITE 600
WARRENVILLE, IL 60555
PHONE: 630-487-5550
WWW.KIMLEY-HORN.COM

USER NAME =	DESIGNED -	REVISED -
	DRAWN -	REVISED -
PLOT SCALE =	CHECKED -	REVISED -
PLOT DATE =	DATE -	REVISED -

STATE OF ILLINOIS
DEPARTMENT OF TRANSPORTATION

TRAFFIC SIGNAL EQUIPMENT REMOVAL PLAN
IL 64 (MAIN ST) AND SMITH RD/KAUTZ RD

SCALE: 1" = 20' | SHEET OF SHEETS | STA. TO STA.

F.A.P. RTE.	SECTION	COUNTY	TOTAL SHEETS	SHEET NO.
307	2020-263-SUR,SW&TS	DUPAGE	529	105
		CONTRACT NO. 62N33		
	ILLINOIS	FED. AID PROJECT		

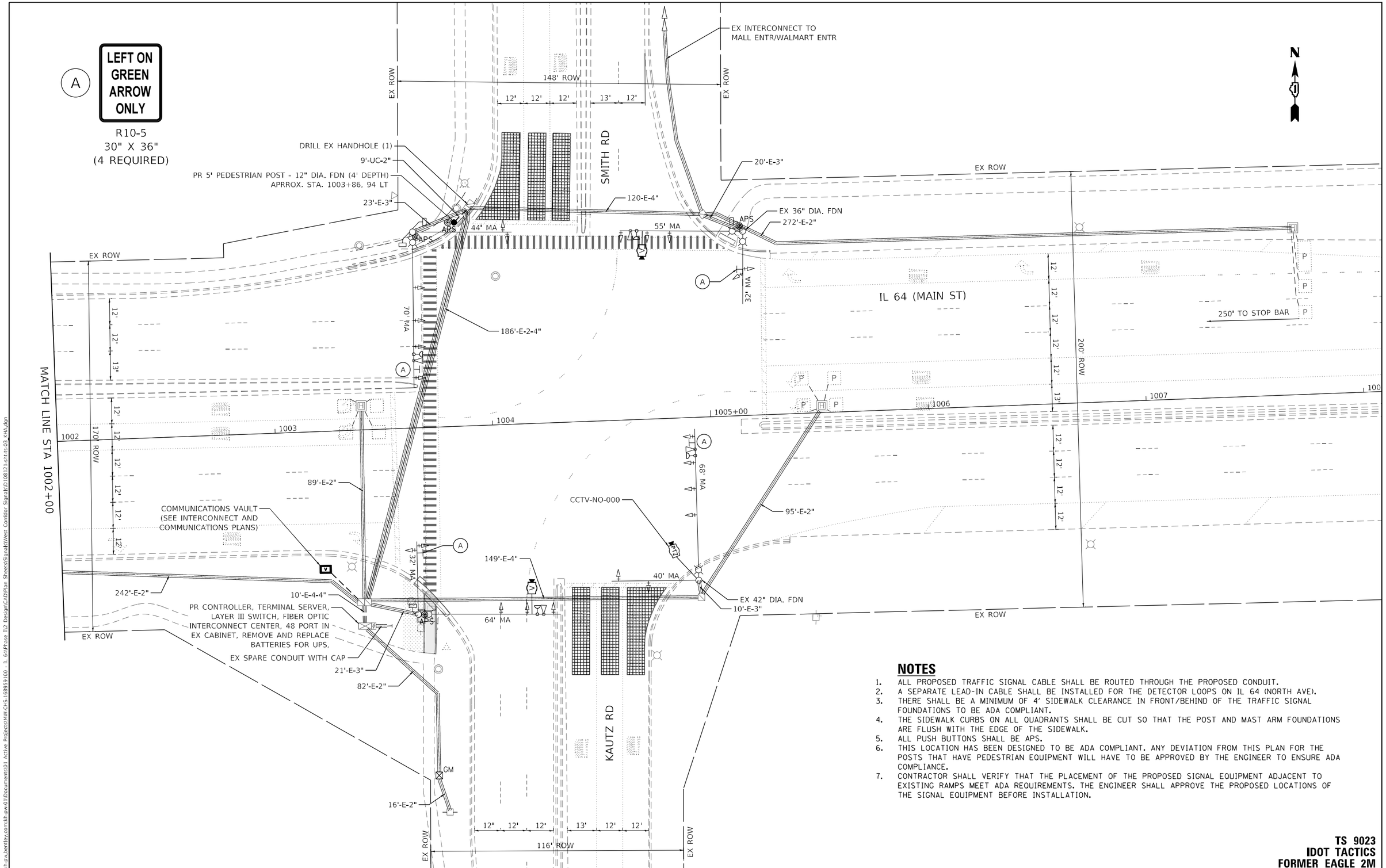

NOTES

1. ALL PROPOSED TRAFFIC SIGNAL CABLE SHALL BE ROUTED THROUGH THE PROPOSED CONDUIT.
2. A SEPARATE LEAD-IN CABLE SHALL BE INSTALLED FOR THE DETECTOR LOOPS ON IL 64 (NORTH AVE).
3. THERE SHALL BE A MINIMUM OF 4' SIDEWALK CLEARANCE IN FRONT/BEHIND OF THE TRAFFIC SIGNAL FOUNDATIONS TO BE ADA COMPLIANT.
4. THE SIDEWALK CURBS ON ALL QUADRANTS SHALL BE CUT SO THAT THE POST AND MAST ARM FOUNDATIONS ARE FLUSH WITH THE EDGE OF THE SIDEWALK.
5. ALL PUSH BUTTONS SHALL BE APS.
6. THIS LOCATION HAS BEEN DESIGNED TO BE ADA COMPLIANT. ANY DEVIATION FROM THIS PLAN FOR THE POSTS THAT HAVE PEDESTRIAN EQUIPMENT WILL HAVE TO BE APPROVED BY THE ENGINEER TO ENSURE ADA COMPLIANCE.
7. CONTRACTOR SHALL VERIFY THAT THE PLACEMENT OF THE PROPOSED SIGNAL EQUIPMENT ADJACENT TO EXISTING RAMPS MEET ADA REQUIREMENTS. THE ENGINEER SHALL APPROVE THE PROPOSED LOCATIONS OF THE SIGNAL EQUIPMENT BEFORE INSTALLATION.

TS 9023
IDOT TACTICS
FORMER EAGLE 2M

MODEL: Default
FILE NAME: pw:\\kh-pw.bentley.com:khpw01\Documents\01 Active Projects\MV-CHS-68959100 - IL 64\Phase III\2 Design\CAD\Plan Sheets\Signal\West Corridor Signal\10108121-sht-001

Kimley»Horn
© 2022 KIMLEY-HORN AND ASSOCIATES, INC.
4201 WINFIELD ROAD, SUITE 600
WARRENVILLE, IL 60555
PHONE: 630-487-5550
WWW.KIMLEY-HORN.COM

USER NAME =	DESIGNED -	REVISED -
	DRAWN -	REVISED -
PLOT SCALE =	CHECKED -	REVISED -
PLOT DATE =	DATE -	REVISED -

STATE OF ILLINOIS
DEPARTMENT OF TRANSPORTATION

TRAFFIC SIGNAL MODERNIZATION PLAN
IL 64 (MAIN ST) AND SMITH RD/KAUTZ RD

SCALE: 1" = 20' | SHEET OF SHEETS | STA. TO STA.

F.A.P. RTE.	SECTION	COUNTY	TOTAL SHEETS	SHEET NO.
307	2020-263-SUR,SW&TS	DUPAGE	529	106
		CONTRACT NO. 62N33		
		ILLINOIS	FED. AID PROJECT	

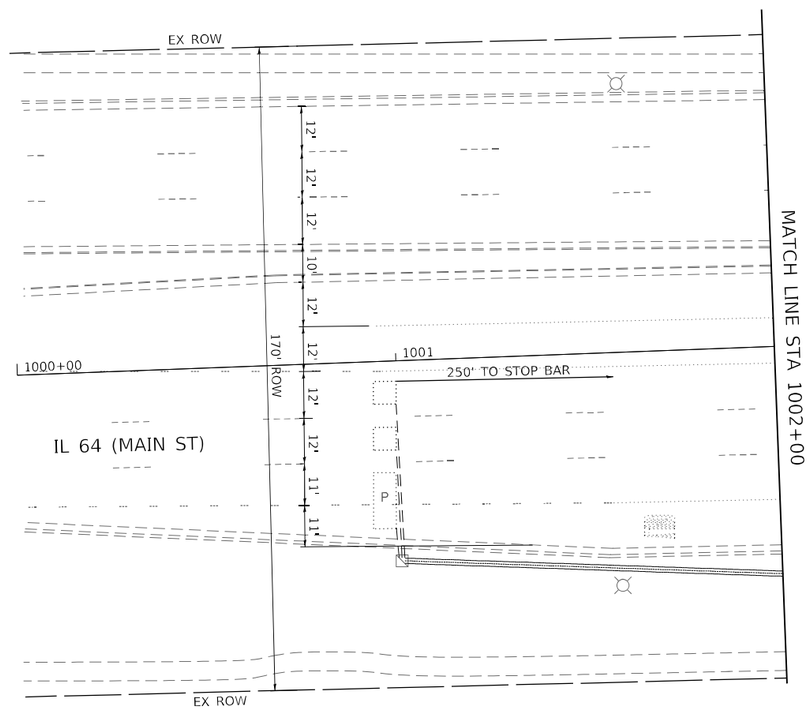

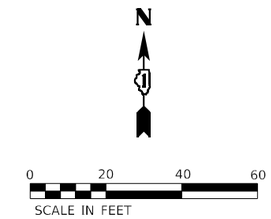

TS 9023
IDOT TACTICS
FORMER EAGLE 2M

MODEL: Default
FILE NAME: pw:\\h-pw.bentley.com:h-pw-01\Documents\01 Active Projects\MW-C-S-168959100 - IL 64\Phase III\2 Design\CADD\Plan Sheets\Signal\West Corridor Signal\01081214-ts-04 KHA.dgn

Kimley»Horn
© 2023 KIMLEY-HORN AND ASSOCIATES, INC.
4201 WINFIELD ROAD, SUITE 603
WARRENVILLE, IL 60555
PHONE: 630-487-5550
WWW.KIMLEY-HORN.COM

USER NAME =	DESIGNED -	REVISED -
	DRAWN -	REVISED -
PLOT SCALE =	CHECKED -	REVISED -
PLOT DATE =	DATE -	REVISED -

STATE OF ILLINOIS
DEPARTMENT OF TRANSPORTATION

TRAFFIC SIGNAL MODERNIZATION PLAN
IL 64 (MAIN ST) AND SMITH RD/KAUTZ RD

SCALE: 1" = 20' | SHEET OF SHEETS | STA. TO STA.

F.A.P. RTE.	SECTION	COUNTY	TOTAL SHEETS	SHEET NO.
307	2020-263-SUR,SW&TS	DUPAGE	529	107
		CONTRACT NO. 62N33		
	ILLINOIS	FED. AID PROJECT		

EXISTING AND PROPOSED CONTROLLER SEQUENCE

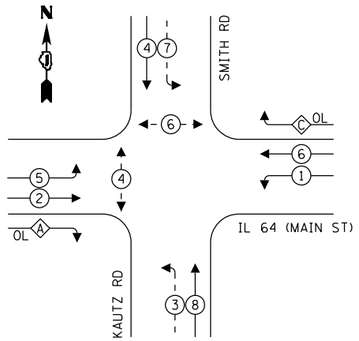

LEGEND:

- PROTECTED PHASE
- PROTECTED/PERMITTED PHASE
- PEDESTRIAN PHASE
- OVERLAP

OVERLAP LETTER		PERMISSIVE PHASE		PROTECTED PHASE
A	=	2	+	3
C	=	6	+	7

EXISTING AND PROPOSED EMERGENCY VEHICLE PREEMPTION SEQUENCE

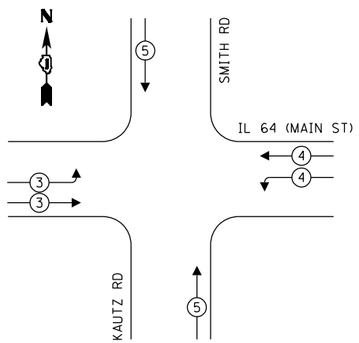

TRAFFIC SIGNAL ELECTRICAL SERVICE REQUIREMENTS

TYPE	QUANTITY	UNIT WATTAGE	TOTAL WATTAGE
SIGNAL HEAD 1 OR 3-SECTION	14	11	154
4-SECTION	-	14	-
5-SECTION	8	13	104
PROGRAMMABLE 3-SECTION	-	22	-
4-SECTION	-	32	-
5-SECTION	-	28	-
PEDESTRIAN SIGNAL	4	15	60
CONTROLLER	1	150	150
MASTER CONTROLLER	-	100	-
UPS	1	25	25
DETECTION VIDEO	2	20	40
BLANK-OUT SIGN	-	25	-
NETWORK SWITCH LAYER II OR III	1	35	35
CELLULAR MODEM	-	15	-
PTZ	1	75	75
TOTAL UPS SIZING			643
UPS CHARGING	1	225	225
BATTERY HEATER MAT	1	180	180
CABINET HEATER	1	200	200
FLASHER	-	15	-
LED STREET NAME SIGN	-	120	-
LUMINAIRE	5	240	1200
TOTAL SERVICE WIRE SIZING			2448

LEGEND:

L = LED LAMP MODULE REPLACEMENT
* = ROADWAY LIGHTING CABLE

ENERGY COSTS TO:
CITY OF ST. CHARLES
2 E MAIN ST
ST. CHARLES, IL 60174

ENERGY SUPPLY: COMPANY: ST. CHARLES ELEC. DEPT.
PHONE: (630) 377-4407
ACCOUNT NUMBER:

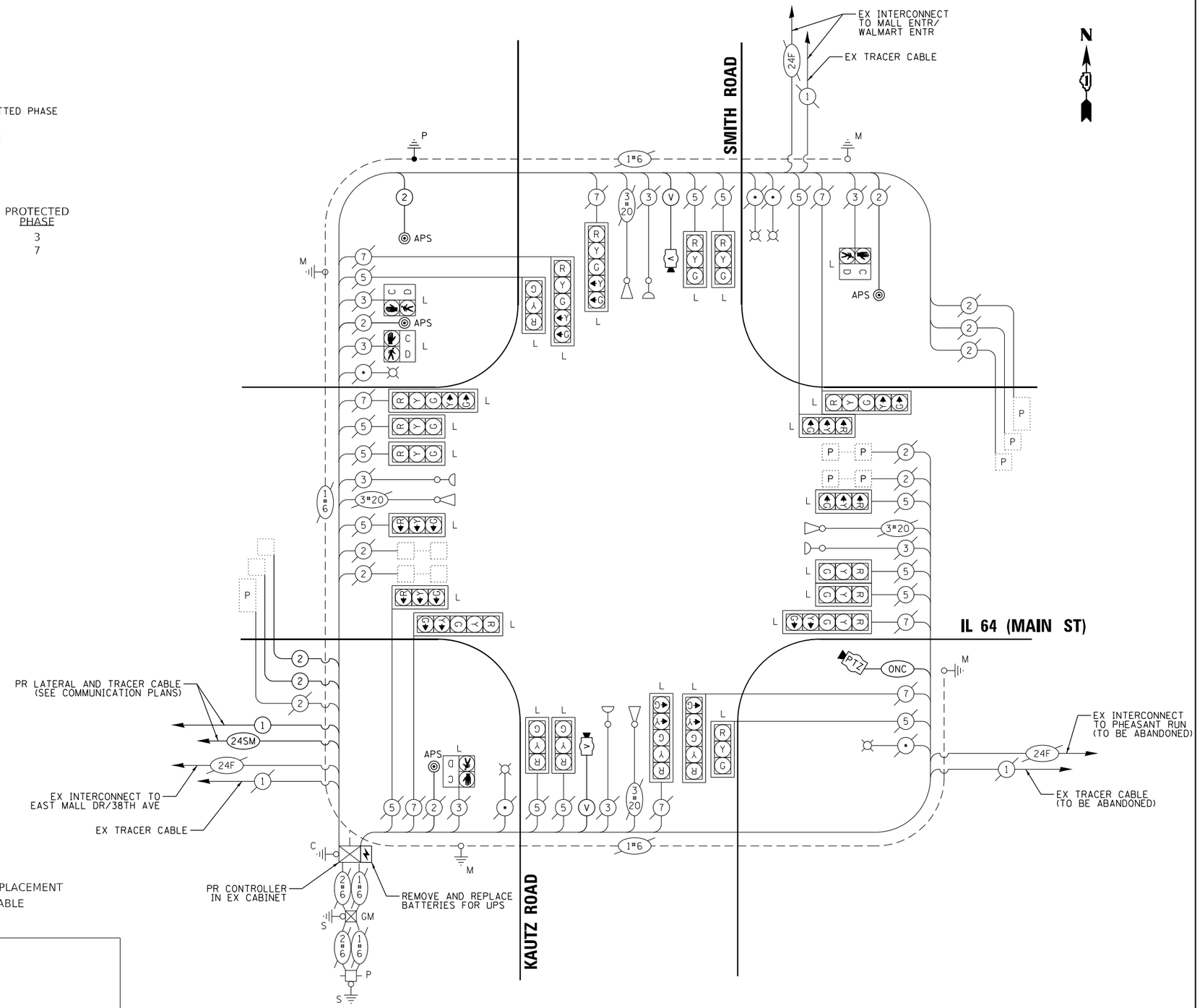

CABLE PLAN

(NOT TO SCALE)

TS 9023
IDOT TACTICS
FORMER EAGLE 2M

MODEL: Default
FILE NAME: pw:\\kh-pw.bentley.com:kh-pw01\Documents\01 Active Projects\MW-CHS-168959100 - IL 64\Phase III\2 Design\CADD\Plan Sheets\Signal\West Corridor Signal\010812-sht-ts-05_KHA.dgn

Kimley»Horn
© 2022 KIMLEY-HORN AND ASSOCIATES, INC.
4201 WINFIELD ROAD, SUITE 600
WARRENVILLE, IL 60555
PHONE: 630-487-5550
WWW.KIMLEY-HORN.COM

USER NAME =	DESIGNED -	REVISED -	
	DRAWN -	REVISED -	
PLOT SCALE =	CHECKED -	REVISED -	
PLOT DATE =	DATE -	REVISED -	

STATE OF ILLINOIS
DEPARTMENT OF TRANSPORTATION

CABLE PLAN, PHASE DESIGNATION DIAGRAM, AND EMERGENCY VEHICLE PREEMPTION SEQUENCE
IL 64 (MAIN ST) AND SMITH RD/KAUTZ RD

SCALE: N.T.S. | SHEET OF SHEETS | STA. TO STA.

F.A.P. RTE.	SECTION	COUNTY	TOTAL SHEETS	SHEET NO.
307	2020-263-SUR,SW&TS	DUPAGE	529	108
		CONTRACT NO. 62N33		
		ILLINOIS	FED. AID PROJECT	

SIGN PANEL – TYPE 2

ALL DIMENSIONS ARE IN INCHES UNLESS OTHERWISE NOTED

DESIGN SERIES	AREA (SQ FT)	SIGN PANEL TYPE	SHEETING TYPE	QTY. REQUIRED
D	11.25	2	ZZ	2

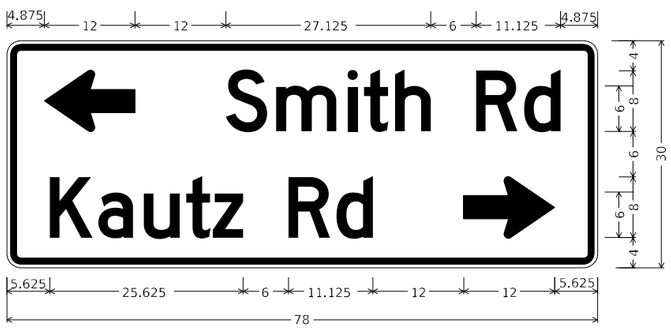

DESIGN SERIES	AREA (SQ FT)	SIGN PANEL TYPE	SHEETING TYPE	QTY. REQUIRED
D	16.25	2	ZZ	2

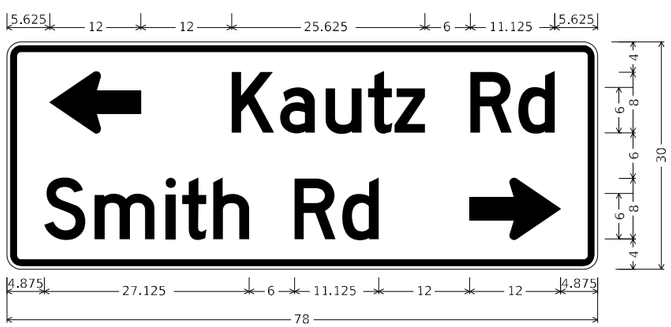

DESIGN SERIES	AREA (SQ FT)	SIGN PANEL TYPE	SHEETING TYPE	QTY. REQUIRED
D	16.25	2	ZZ	2

SCHEDULE OF QUANTITIES

ITEM DESCRIPTION	UNIT	QUANTITY
SIGN PANEL - TYPE 2	SQ FT	87.5
MAINTENANCE OF EXISTING TRAFFIC SIGNAL INSTALLATION	EACH	1
ELECTRIC CABLE IN CONDUIT, SIGNAL NO. 14 2C	FOOT	248
ELECTRIC CABLE IN CONDUIT, LEAD-IN, NO. 14 1 PAIR	FOOT	555
DRILL EXISTING HANDHOLE	EACH	1
INDUCTIVE LOOP DETECTOR	EACH	2
REMOVE EXISTING TRAFFIC SIGNAL EQUIPMENT	EACH	1
REMOVE EXISTING HANDHOLE	EACH	2
CLOSED CIRCUIT TELEVISION DOME CAMERA, HD	EACH	1
TERMINAL SERVER	EACH	1
LED LAMP MODULE REPLACEMENT	EACH	82
OUTDOOR RATED NETWORK CABLE	FOOT	221
REMOTE CONTROLLED VIDEO SYSTEM	EACH	1
TERMINATE FIBER IN CABINET	EACH	36
PEDESTRIAN SIGNAL POST, 5 FT.	EACH	1
LAYER III (NETWORK) SWITCH	EACH	1
TACTICS LICENSE EXPANSION	EACH	1
FULL-ACTUATED CONTROLLER IN EXISTING CABINET	EACH	1
REMOVE AND REPLACE BATTERIES FOR UNINTERUPTABLE POWER SUPPLY, EXTENDED	EACH	1
FIBER OPTIC INTERCONNECT CENTER, 48 PORT	EACH	1
ACCESSIBLE PEDESTRIAN SIGNALS	EACH	4
CONCRETE FOUNDATION, TYPE A 12-INCH DIAMETER	FOOT	4
LED SIGNAL FACE, LENS COVER	EACH	22
LED PEDESTRIAN SIGNAL MODULE REPLACEMENT	EACH	12
VIDEO VEHICLE DETECTION SYSTEM, SINGLE APPROACH	EACH	2
CAMERA MOUNTING ASSEMBLY	EACH	1

TS 9023
IDOT TACTICS
FORMER EAGLE 2M

MODEL: Default
FILE NAME: pw:\\jb-pw.bentley.com:sh-pw-01\Documents\01 Active Projects\HWY-C1-S-1689959100 - IL 64\Phase III\2 Design\CADD\Plan Sheets\Sign-R\West Corridor Sign-R\D108121-sht4-of6_KHA.dgn

Kimley»Horn
© 2023 KIMLEY-HORN AND ASSOCIATES, INC.
4201 WINFIELD ROAD, SUITE 600
WARRENVILLE, IL 60555
PHONE: 630-487-5550
WWW.KIMLEY-HORN.COM

USER NAME =	DESIGNED -	REVISED -
	DRAWN -	REVISED -
PLOT SCALE =	CHECKED -	REVISED -
PLOT DATE =	DATE -	REVISED -

STATE OF ILLINOIS
DEPARTMENT OF TRANSPORTATION

SCHEDULE OF QUANTITIES
IL 64 (MAIN ST) AND SMITH RD/KAUTZ RD

SCALE: N.T.S. | SHEET OF SHEETS | STA. TO STA.

F.A.P. RTE.	SECTION	COUNTY	TOTAL SHEETS	SHEET NO.
307	2020-263-SUR,SW&TS	DUPAGE	529	109

CONTRACT NO. 62N33

ILLINOIS | FED. AID PROJECT

NOTES

1. THE EXISTING TRAFFIC SIGNAL EQUIPMENT SHALL NOT BE REMOVED UNTIL THE PROPOSED TRAFFIC SIGNAL EQUIPMENT IS FULLY OPERATIONAL OR AS DIRECTED BY THE ENGINEER.

2. ALL EXISTING TRAFFIC SIGNAL CABLE NO LONGER REQUIRED SHALL BE REMOVED.

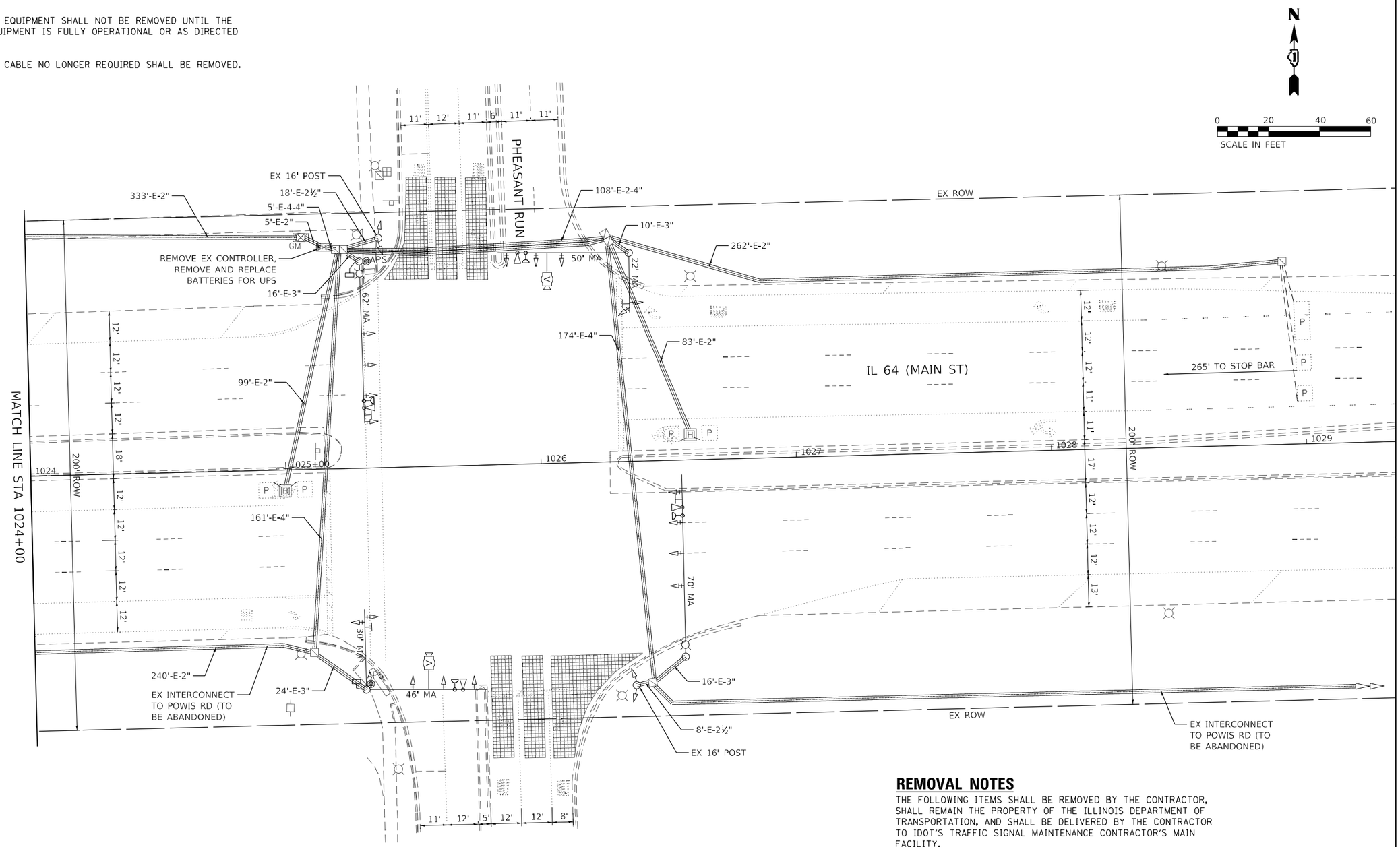

REMOVAL NOTES

THE FOLLOWING ITEMS SHALL BE REMOVED BY THE CONTRACTOR, SHALL REMAIN THE PROPERTY OF THE ILLINOIS DEPARTMENT OF TRANSPORTATION, AND SHALL BE DELIVERED BY THE CONTRACTOR TO IDOT'S TRAFFIC SIGNAL MAINTENANCE CONTRACTOR'S MAIN FACILITY.

1 EACH CONTROLLER (M52)

TS 9024
IDOT TACTICS
FORMER EAGLE 2M

MODEL: Default
FILE NAME: pw:\\kh-pw.bentley.com:kh-pw01\Documents\01 Active Projects\MV-CHS-168959100 - IL 64\Phase III\2 Design\CAD\Plan Sheets\Signal\West Corridor Signal\D108121-sht4-v07 KHA.dgn

Kimley»Horn
© 2022 KIMLEY-HORN AND ASSOCIATES, INC.
4201 WINFIELD ROAD, SUITE 600
WARRENVILLE, IL 60555
PHONE: 630-487-5550
WWW.KIMLEY-HORN.COM

USER NAME =	DESIGNED -	REVISED -
	DRAWN -	REVISED -
PLOT SCALE =	CHECKED -	REVISED -
PLOT DATE =	DATE -	REVISED -

STATE OF ILLINOIS
DEPARTMENT OF TRANSPORTATION

TRAFFIC SIGNAL EQUIPMENT REMOVAL PLAN
IL 64 (MAIN ST) AND PHEASANT RUN

SCALE: 1" = 20' | SHEET OF SHEETS | STA. TO STA.

F.A.P. RTE.	SECTION	COUNTY	TOTAL SHEETS	SHEET NO.
307	2020-263-SUR,SW&TS	DUPAGE	529	110
		CONTRACT NO. 62N33		
		ILLINOIS	FED. AID PROJECT	

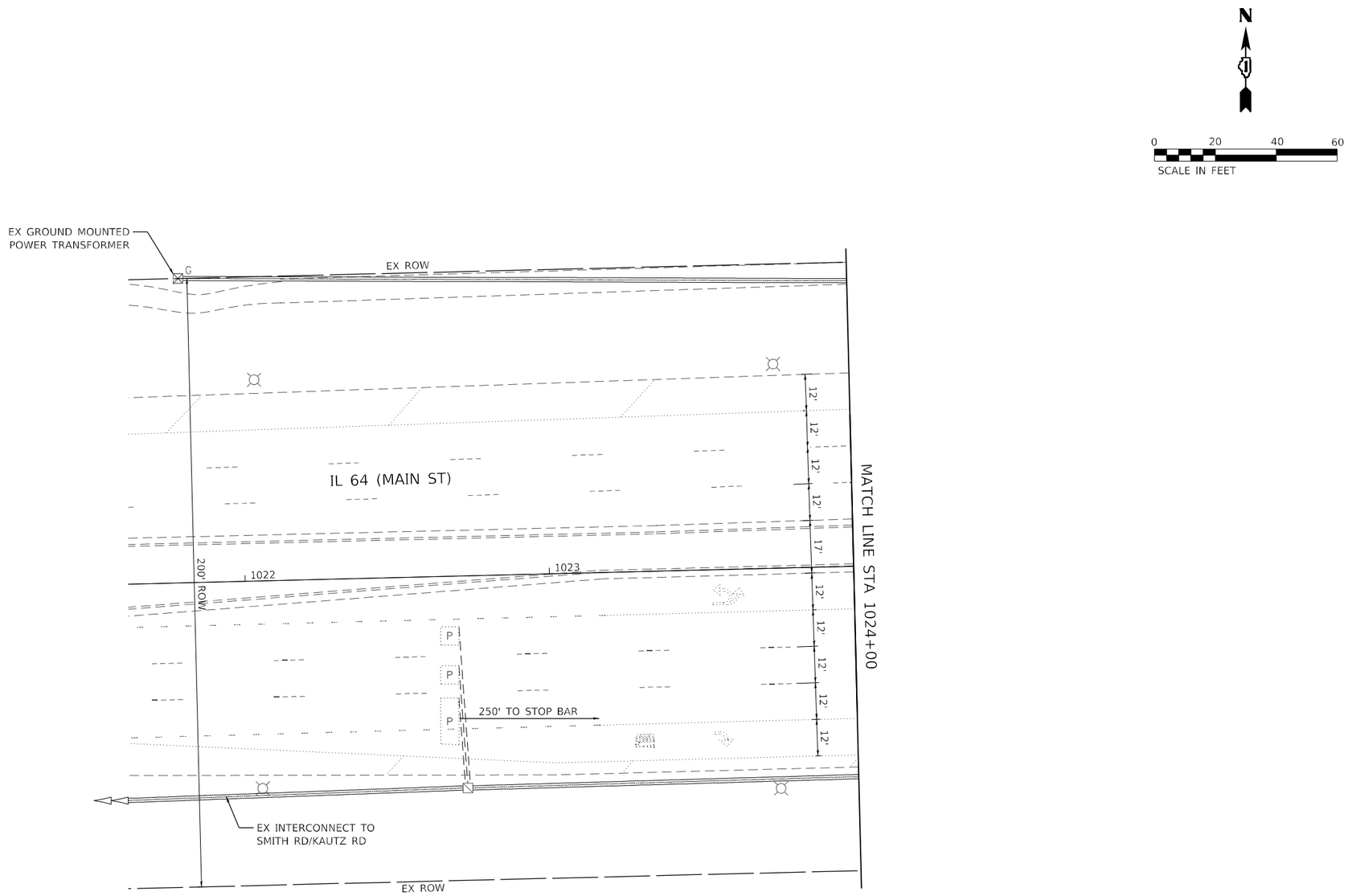

TS 9024
IDOT TACTICS
FORMER EAGLE 2M

MODEL: Default
FILE NAME: pw:\\jk-pw.kimley.com:jk-pw-91\Documents\01 Active Projects\HWY-Ch-S-168959100 - IL 64\Phase II\2 Design\CAD\Plan Sheets\Signal\NWest Corridor Signal\D10872-int-08 KHA.dgn

Kimley»Horn
© 2022 KIMLEY-HORN AND ASSOCIATES, INC.
4201 WINFIELD ROAD, SUITE 600
WARRENVILLE, IL 60555
PHONE: 630-487-5550
WWW.KIMLEY-HORN.COM

USER NAME =	DESIGNED -	REVISED -
	DRAWN -	REVISED -
PLOT SCALE =	CHECKED -	REVISED -
PLOT DATE =	DATE -	REVISED -

STATE OF ILLINOIS
DEPARTMENT OF TRANSPORTATION

TRAFFIC SIGNAL EQUIPMENT REMOVAL PLAN
IL 64 (MAIN ST) AND PHEASANT RUN

SCALE: 1" = 20' | SHEET OF SHEETS | STA. TO STA.

F.A.P. RTE.	SECTION	COUNTY	TOTAL SHEETS	SHEET NO.
307	2020-263-SUR,SW&TS	DUPAGE	529	111
		CONTRACT NO. 62N33		
	ILLINOIS	FED. AID PROJECT		

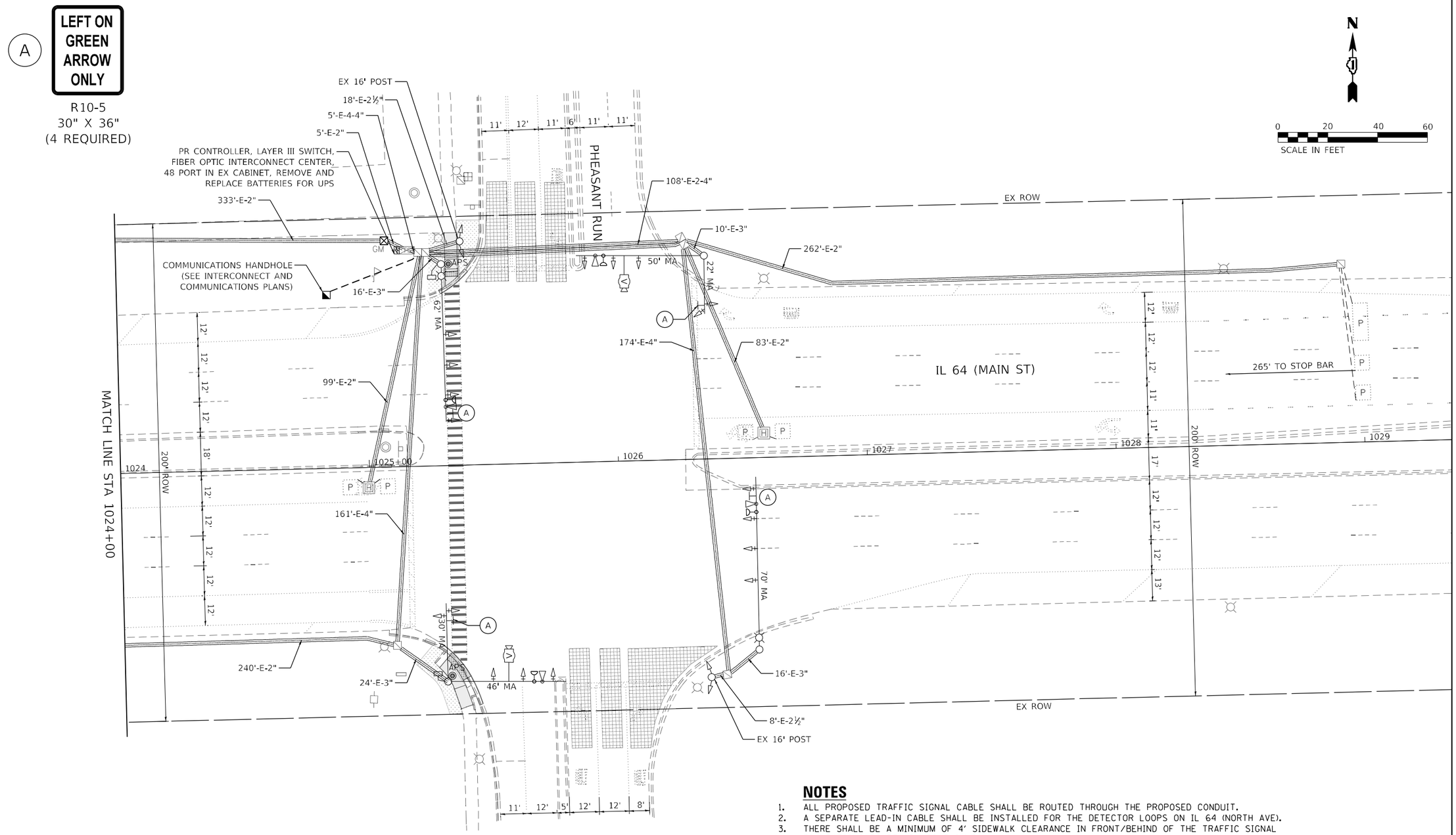

NOTES

1. ALL PROPOSED TRAFFIC SIGNAL CABLE SHALL BE ROUTED THROUGH THE PROPOSED CONDUIT.
2. A SEPARATE LEAD-IN CABLE SHALL BE INSTALLED FOR THE DETECTOR LOOPS ON IL 64 (NORTH AVE).
3. THERE SHALL BE A MINIMUM OF 4' SIDEWALK CLEARANCE IN FRONT/BEHIND OF THE TRAFFIC SIGNAL FOUNDATIONS TO BE ADA COMPLIANT.
4. THE SIDEWALK CURBS ON ALL QUADRANTS SHALL BE CUT SO THAT THE POST AND MAST ARM FOUNDATIONS ARE FLUSH WITH THE EDGE OF THE SIDEWALK.
5. ALL PUSH BUTTONS SHALL BE APS.
6. THIS LOCATION HAS BEEN DESIGNED TO BE ADA COMPLIANT. ANY DEVIATION FROM THIS PLAN FOR THE POSTS THAT HAVE PEDESTRIAN EQUIPMENT WILL HAVE TO BE APPROVED BY THE ENGINEER TO ENSURE ADA COMPLIANCE.
7. CONTRACTOR SHALL VERIFY THAT THE PLACEMENT OF THE PROPOSED SIGNAL EQUIPMENT ADJACENT TO EXISTING RAMPS MEET ADA REQUIREMENTS. THE ENGINEER SHALL APPROVE THE PROPOSED LOCATIONS OF THE SIGNAL EQUIPMENT BEFORE INSTALLATION.

TS 9024
IDOT TACTICS
FORMER EAGLE 2M

MODEL: Default
FILE NAME: pw:\\kh-pw.bentley.com:kh-pw-01\Documents\01 Active Projects\MV-CHS-168959100 - IL 64\Phase III\2 Design\CAD\Plan Sheets\Signal\IDOT\West Corridor Signal\1010821-sht4-09_KHA.dgn

Kimley»Horn
© 2022 KIMLEY-HORN AND ASSOCIATES, INC.
4201 WINFIELD ROAD, SUITE 600
WARRENVILLE, IL 60555
PHONE: 630-487-5550
WWW.KIMLEY-HORN.COM

USER NAME =	DESIGNED -	REVISED -	
	DRAWN -	REVISED -	
PLOT SCALE =	CHECKED -	REVISED -	
PLOT DATE =	DATE -	REVISED -	

STATE OF ILLINOIS
DEPARTMENT OF TRANSPORTATION

TRAFFIC SIGNAL MODERNIZATION PLAN
IL 64 (MAIN ST) AND PHEASANT RUN

SCALE: 1" = 20' | SHEET OF SHEETS | STA. TO STA.

F.A.P. RTE.	SECTION	COUNTY	TOTAL SHEETS	SHEET NO.
307	2020-263-SUR,SW&TS	DUPAGE	529	112
		CONTRACT NO. 62N33		
	ILLINOIS	FED. AID PROJECT		

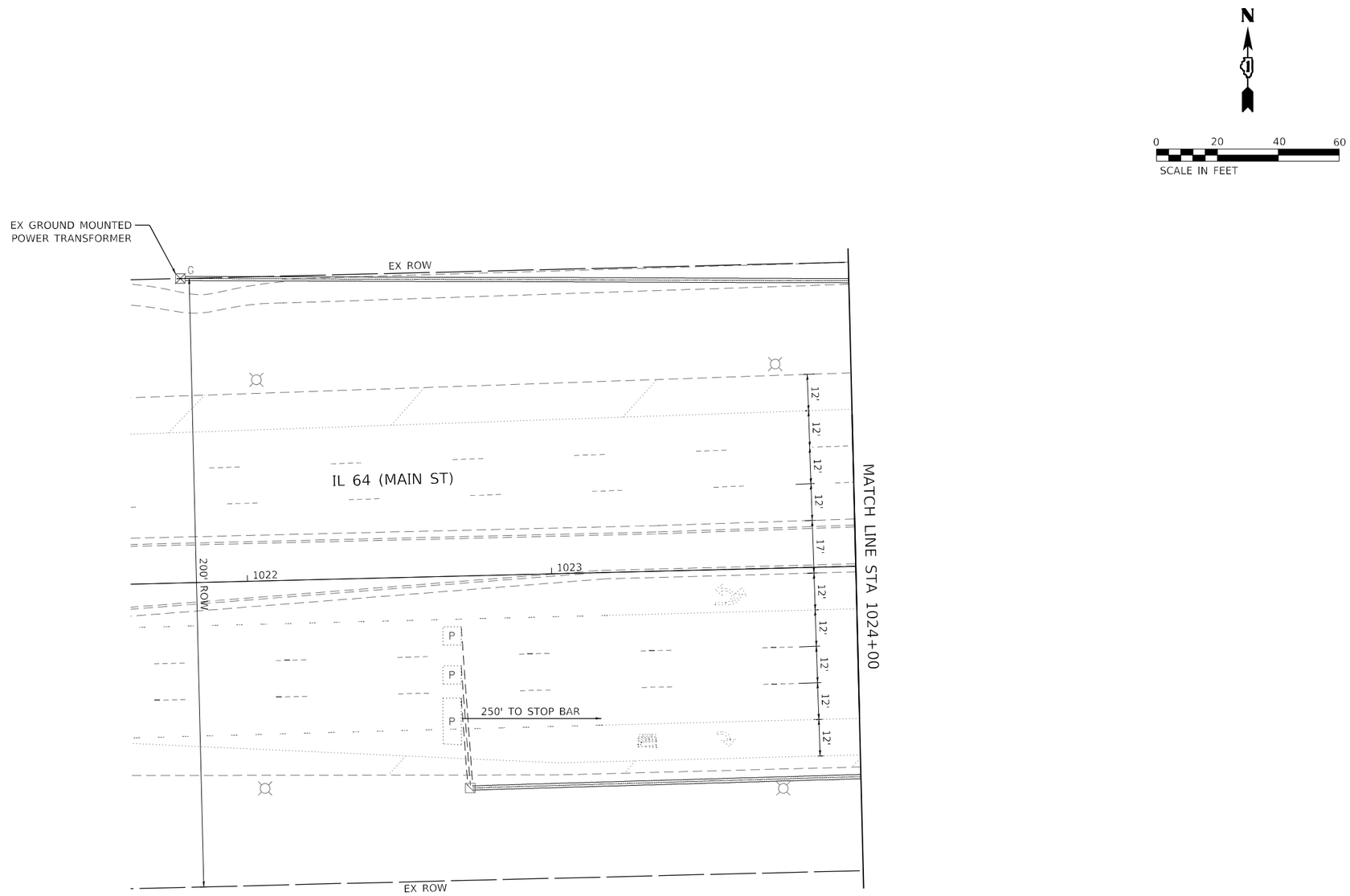

TS 9024
IDOT TACTICS
FORMER EAGLE 2M

MODEL: Default
FILE NAME: pw:\\jk-pw.bentley.com:jk-pw-01\Documents\01 Active Projects\HW-Ch-S-1689\9100 - IL 64\Phase III\2 Design\CAD\Plan Sheets\Signal\D10872-int-1-10 KHA.dgn

Kimley»Horn
© 2022 KIMLEY-HORN AND ASSOCIATES, INC.
4201 WINFIELD ROAD, SUITE 600
WARRENVILLE, IL 60555
PHONE: 630-487-5550
WWW.KIMLEY-HORN.COM

USER NAME =	DESIGNED -	REVISED -
	DRAWN -	REVISED -
PLOT SCALE =	CHECKED -	REVISED -
PLOT DATE =	DATE -	REVISED -

STATE OF ILLINOIS
DEPARTMENT OF TRANSPORTATION

TRAFFIC SIGNAL MODERNIZATION PLAN
IL 64 (MAIN ST) AND PHEASANT RUN

SCALE: 1" = 20' | SHEET OF SHEETS | STA. TO STA.

F.A.P. RTE.	SECTION	COUNTY	TOTAL SHEETS	SHEET NO.
307	2020-263-SUR,SW&TS	DUPAGE	529	113
		CONTRACT NO. 62N33		
	ILLINOIS	FED. AID PROJECT		

EXISTING AND PROPOSED CONTROLLER SEQUENCE

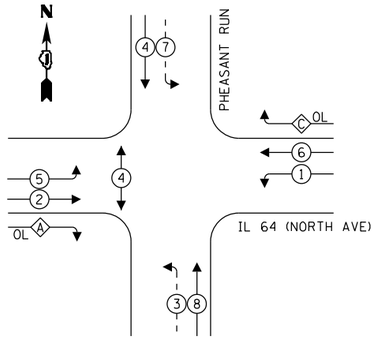

LEGEND:

- PROTECTED PHASE
- PROTECTED/PERMITTED PHASE
- PEDESTRIAN PHASE
- OL OVERLAP

OVERLAP LETTER		PERMISSIVE PHASE		PROTECTED PHASE
A	=	2	+	3
C	=	6	+	7

EXISTING AND PROPOSED EMERGENCY VEHICLE PREEMPTION SEQUENCE

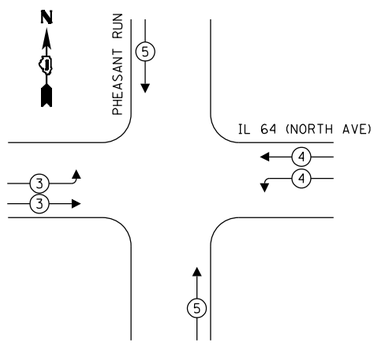

TRAFFIC SIGNAL ELECTRICAL SERVICE REQUIREMENTS

TYPE	QUANTITY	UNIT WATTAGE	TOTAL WATTAGE
SIGNAL HEAD 1 OR 3-SECTION	14	11	154
4-SECTION	-	14	-
5-SECTION	8	13	104
PROGRAMMABLE 3-SECTION	-	22	-
4-SECTION	-	32	-
5-SECTION	-	28	-
PEDESTRIAN SIGNAL	2	15	30
CONTROLLER	1	150	150
MASTER CONTROLLER	-	100	-
UPS	1	25	25
DETECTION VIDEO	2	20	40
BLANK-OUT SIGN	-	25	-
NETWORK SWITCH LAYER II OR III	1	35	35
CELLULAR MODEM	-	15	-
PTZ	-	75	-
TOTAL UPS SIZING			538
UPS CHARGING	1	225	225
BATTERY HEATER MAT	1	180	180
CABINET HEATER	1	200	200
FLASHER	-	15	-
LED STREET NAME SIGN	-	120	-
LUMINAIRE	-	240	-
TOTAL SERVICE WIRE SIZING			1143

ENERGY COSTS TO:
CITY OF ST. CHARLES
2 E MAIN ST
ST. CHARLES, IL 60174

ENERGY SUPPLY: CONTACT: STEVE SHROBA
PHONE: (630) 377-4475
ACCOUNT NUMBER:

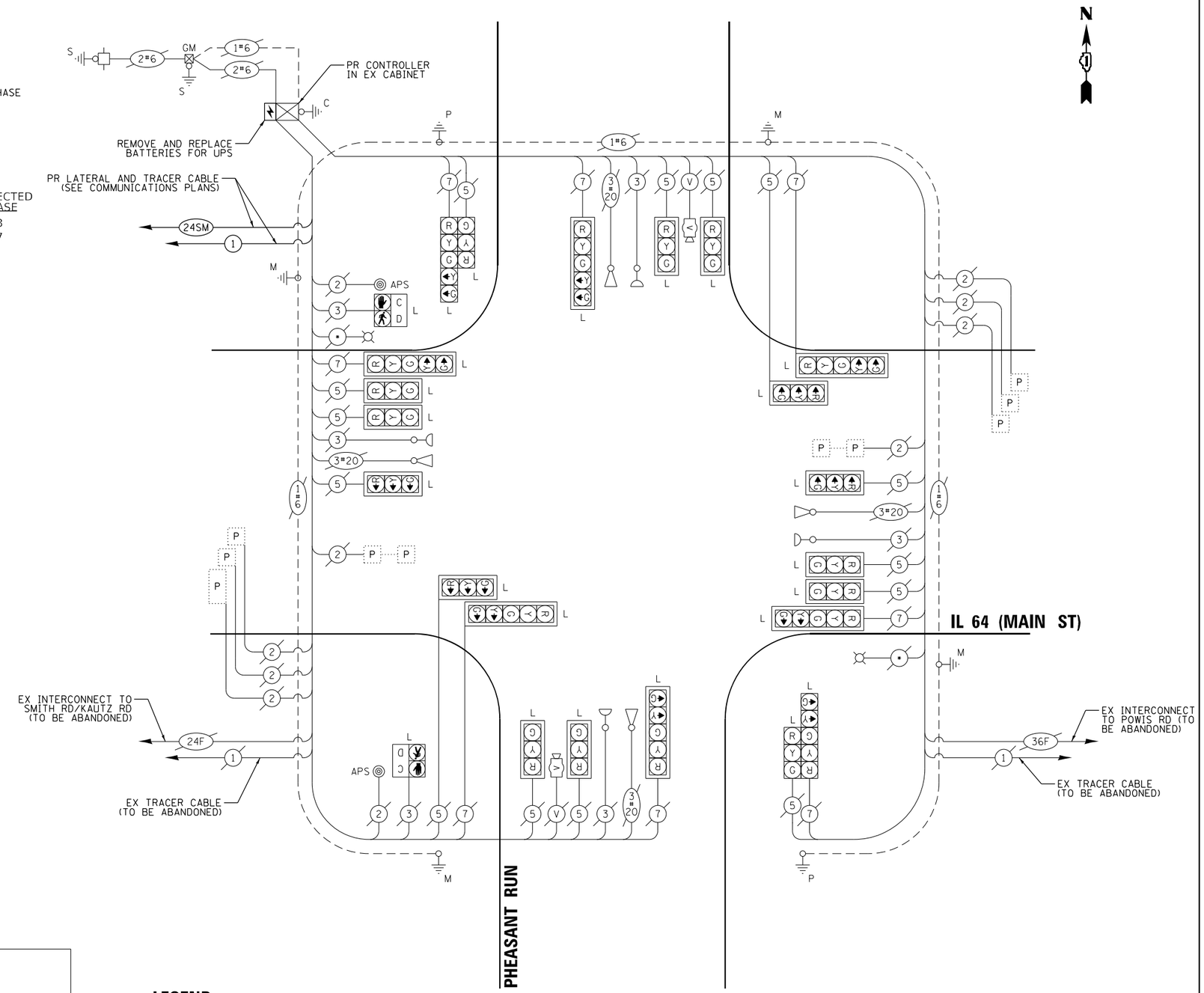

LEGEND:

L = LED LAMP MODULE REPLACEMENT
* = ROADWAY LIGHTING CABLE

CABLE PLAN

(NOT TO SCALE)

TS 9024
IDOT TACTICS
FORMER EAGLE 2M

Kimley»Horn
© 2022 KIMLEY-HORN AND ASSOCIATES, INC.
4001 WINFIELD ROAD, SUITE 600
WARRENVILLE, IL 60555
PHONE: 630-487-5550
WWW.KIMLEY-HORN.COM

USER NAME =	DESIGNED -	REVISED -	
	DRAWN -	REVISED -	
PLOT SCALE =	CHECKED -	REVISED -	
PLOT DATE =	DATE -	REVISED -	

STATE OF ILLINOIS
DEPARTMENT OF TRANSPORTATION

CABLE PLAN, PHASE DESIGNATION DIAGRAM, AND EMERGENCY VEHICLE PREEMPTION SEQUENCE IL 64 (MAIN ST) AND PHEASANT RUN

SCALE: N.T.S. | SHEET OF SHEETS | STA. TO STA.

F.A.P. RTE.	SECTION	COUNTY	TOTAL SHEETS	SHEET NO.
307	2020-263-SUR,SW&TS	DUPAGE	529	114
		CONTRACT NO. 62N33		
		ILLINOIS	FED. AID PROJECT	

MODEL: Default
FILE NAME: pw:\\uk-pw.bentley.com:ch-pw-01\Documents\01 Active Projects\HWCHS-168959100 - IL 64\Phase II\2 Design\CAD\Plan Sheets\Sign-IL\West Corridor Sign-IL\D10872-cont4-11 KHA.dgn

SIGN PANEL – TYPE 2

ALL DIMENSIONS ARE IN INCHES UNLESS OTHERWISE NOTED

DESIGN SERIES	AREA (SQ FT)	SIGN PANEL TYPE	SHEETING TYPE	QTY. REQUIRED
D	11.25	2	ZZ	2

SCHEDULE OF QUANTITIES

ITEM DESCRIPTION	UNIT	QUANTITY
SIGN PANEL - TYPE 2	SQ FT	22.5
MAINTENANCE OF EXISTING TRAFFIC SIGNAL INSTALLATION	EACH	1
REMOVE EXISTING TRAFFIC SIGNAL EQUIPMENT	EACH	1
LED LAMP MODULE REPLACEMENT	EACH	82
LAYER II (DATALINK) SWITCH	EACH	1
TACTICS LICENSE EXPANSION	EACH	1
FULL-ACTUATED CONTROLLER IN EXISTING CABINET	EACH	1
REMOVE AND REPLACE BATTERIES FOR UNINTERUPTABLE POWER SUPPLY, EXTENDED	EACH	1
FIBER OPTIC INTERCONNECT CENTER, 48 PORT	EACH	1
ACCESSIBLE PEDESTRIAN SIGNALS	EACH	2
LED SIGNAL FACE, LENS COVER	EACH	22
LED PEDESTRIAN SIGNAL MODULE REPLACEMENT	EACH	6
TERMINATE FIBER IN CABINET	EACH	12

TS 9024
IDOT TACTICS
FORMER EAGLE 2M

MODEL: Default
FILE NAME: pw:\\h-pw.bentley.com:h-pw-01\Documents01 Active Projects\NW-Cr-S-168959100 - IL 64\Phase III\2 Design\CADD\Plan Sheets\Signal\NWest Corridor Signal\D108121-sht-ts-12-KHA.dgn

Kimley»Horn
© 2023 KIMLEY-HORN AND ASSOCIATES, INC.
4001 WARRENVILLE ROAD, SUITE 600
WARRENVILLE, IL 60555
PHONE: 630-487-5550
WWW.KIMLEY-HORN.COM

USER NAME =	DESIGNED -	REVISED -
	DRAWN -	REVISED -
PLOT SCALE =	CHECKED -	REVISED -
PLOT DATE =	DATE -	REVISED -

STATE OF ILLINOIS
DEPARTMENT OF TRANSPORTATION

MAST ARM MOUNTED STREET NAME SIGNS AND SCHEDULE OF QUANTITIES
IL 64 (MAIN ST) AND PHEASANT RUN

SCALE: N.T.S. | SHEET OF SHEETS | STA. TO STA.

F.A.P. RTE.	SECTION	COUNTY	TOTAL SHEETS	SHEET NO.
307	2020-263-SUR,SW&TS	DUPAGE	529	115

CONTRACT NO. 62N33

ILLINOIS | FED. AID PROJECT

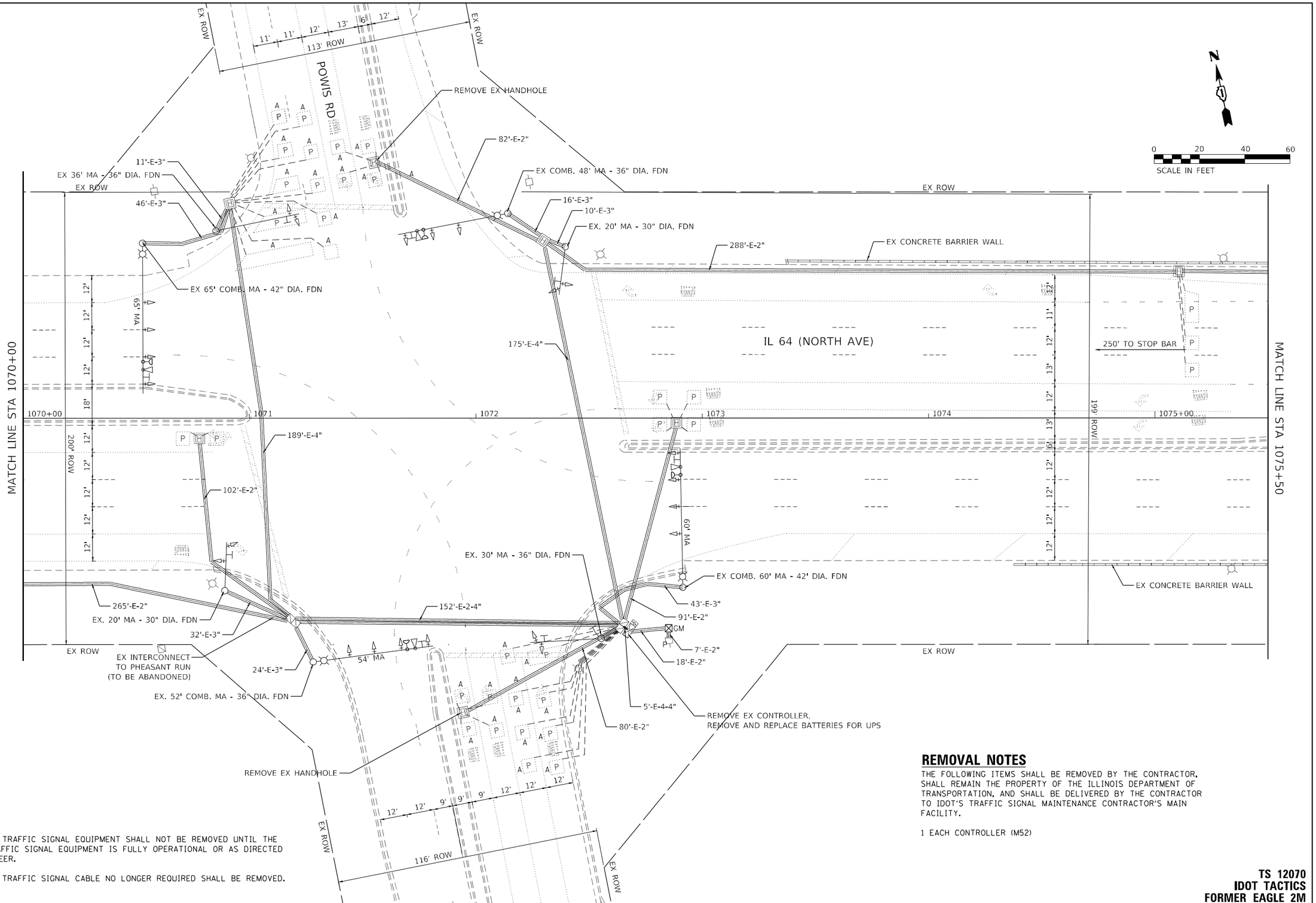

NOTES

1. THE EXISTING TRAFFIC SIGNAL EQUIPMENT SHALL NOT BE REMOVED UNTIL THE PROPOSED TRAFFIC SIGNAL EQUIPMENT IS FULLY OPERATIONAL OR AS DIRECTED BY THE ENGINEER.
2. ALL EXISTING TRAFFIC SIGNAL CABLE NO LONGER REQUIRED SHALL BE REMOVED.

REMOVAL NOTES

THE FOLLOWING ITEMS SHALL BE REMOVED BY THE CONTRACTOR, SHALL REMAIN THE PROPERTY OF THE ILLINOIS DEPARTMENT OF TRANSPORTATION, AND SHALL BE DELIVERED BY THE CONTRACTOR TO IDOT'S TRAFFIC SIGNAL MAINTENANCE CONTRACTOR'S MAIN FACILITY.

1 EACH CONTROLLER (M52)

TS 12070
IDOT TACTICS
FORMER EAGLE 2M

MODEL: Default
FILE NAME: pw:\\kh-pw.bentley.com:kh-pw-01\Documents\01 Active Projects\MVCPS-168959100 - IL 64\Phase III\2 Design\CAD\Plan Sheets\Signal\West Corridor Signal\D108121-sht4-13_KHA.dgn

Kimley»Horn
© 2020 KIMLEY-HORN AND ASSOCIATES, INC.
4201 WINFIELD ROAD, SUITE 600
WARRENVILLE, IL 60555
PHONE: 630-487-5550
WWW.KIMLEY-HORN.COM

USER NAME =	DESIGNED -	REVISED -	
	DRAWN -	REVISED -	
PLOT SCALE =	CHECKED -	REVISED -	
PLOT DATE =	DATE -	REVISED -	

STATE OF ILLINOIS
DEPARTMENT OF TRANSPORTATION

TRAFFIC SIGNAL EQUIPMENT REMOVAL PLAN
IL 64 (NORTH AVE) AND POWIS RD

SCALE: 1" = 20' | SHEET OF SHEETS | STA. TO STA.

F.A.P. RTE.	SECTION	COUNTY	TOTAL SHEETS	SHEET NO.
307	2020-263-SUR,SW&TS	DUPAGE	529	116
		CONTRACT NO. 62N33		
	ILLINOIS	FED. AID PROJECT		

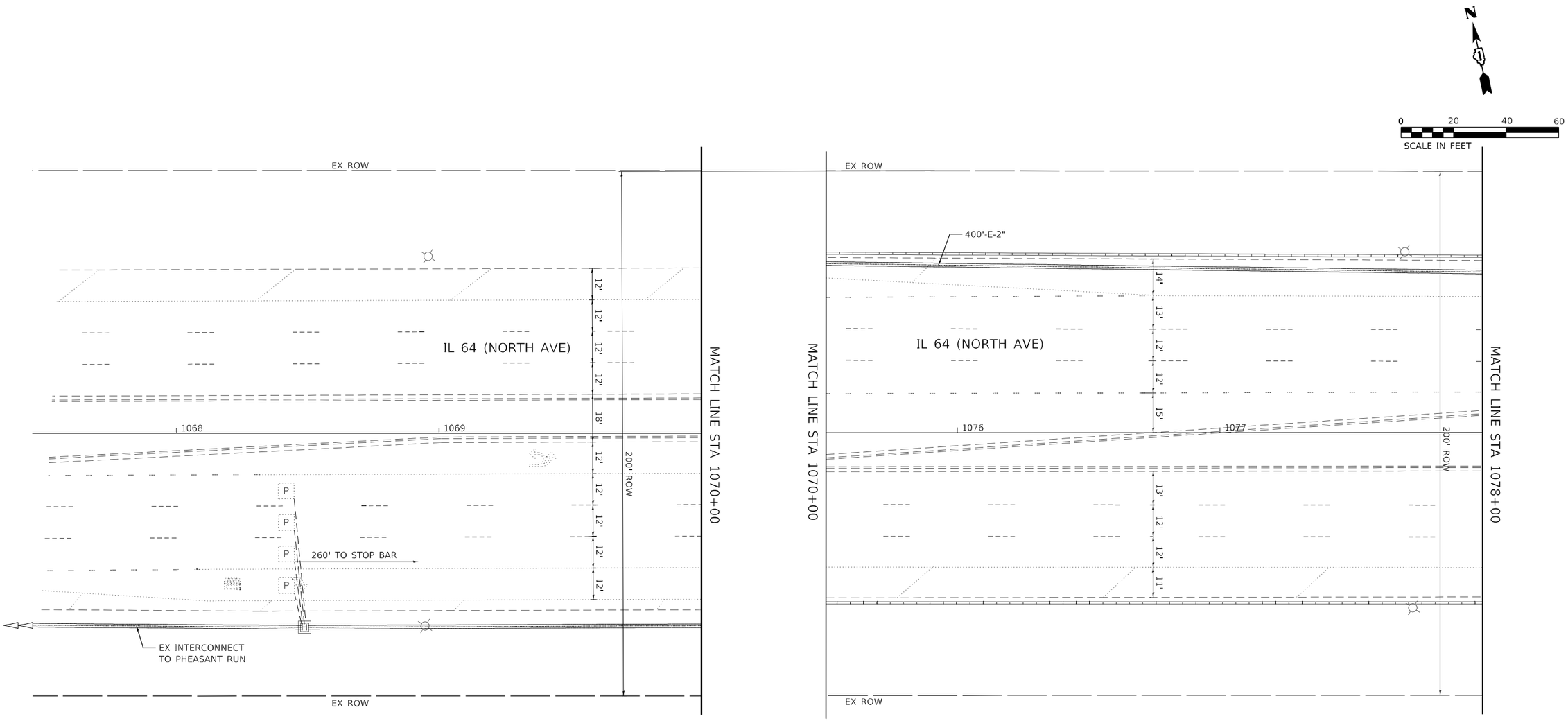

TS 12070
IDOT TACTICS
FORMER EAGLE 2M

MODEL: Default
FILE NAME: pw:\\lh-pw.bentley.com:lh-pw-01\Documents\01 Active Projects\MW-CI-S-L689591 00 - IL 64\Phase III\2 Design\CAD\Plan Sheets\Signal\West Corridor Signal\D1081212-WH-S-14 KHA.dgn

Kimley»Horn
© 2023 KIMLEY-HORN AND ASSOCIATES, INC.
4201 WINFIELD ROAD, SUITE 600
WARRENVILLE, IL 60555
PHONE: 630-487-5550
WWW.KIMLEY-HORN.COM

USER NAME =	DESIGNED -	REVISED -
	DRAWN -	REVISED -
PLOT SCALE =	CHECKED -	REVISED -
PLOT DATE =	DATE -	REVISED -

STATE OF ILLINOIS
DEPARTMENT OF TRANSPORTATION

TRAFFIC SIGNAL EQUIPMENT REMOVAL PLAN
IL 64 (NORTH AVE) AND POWIS RD

SCALE: 1" = 20' | SHEET OF SHEETS | STA. TO STA.

F.A.P. RTE.	SECTION	COUNTY	TOTAL SHEETS	SHEET NO.
307	2020-263-SUR,SW&TS	DUPAGE	529	117
		CONTRACT NO. 62N33		
	ILLINOIS	FED. AID PROJECT		

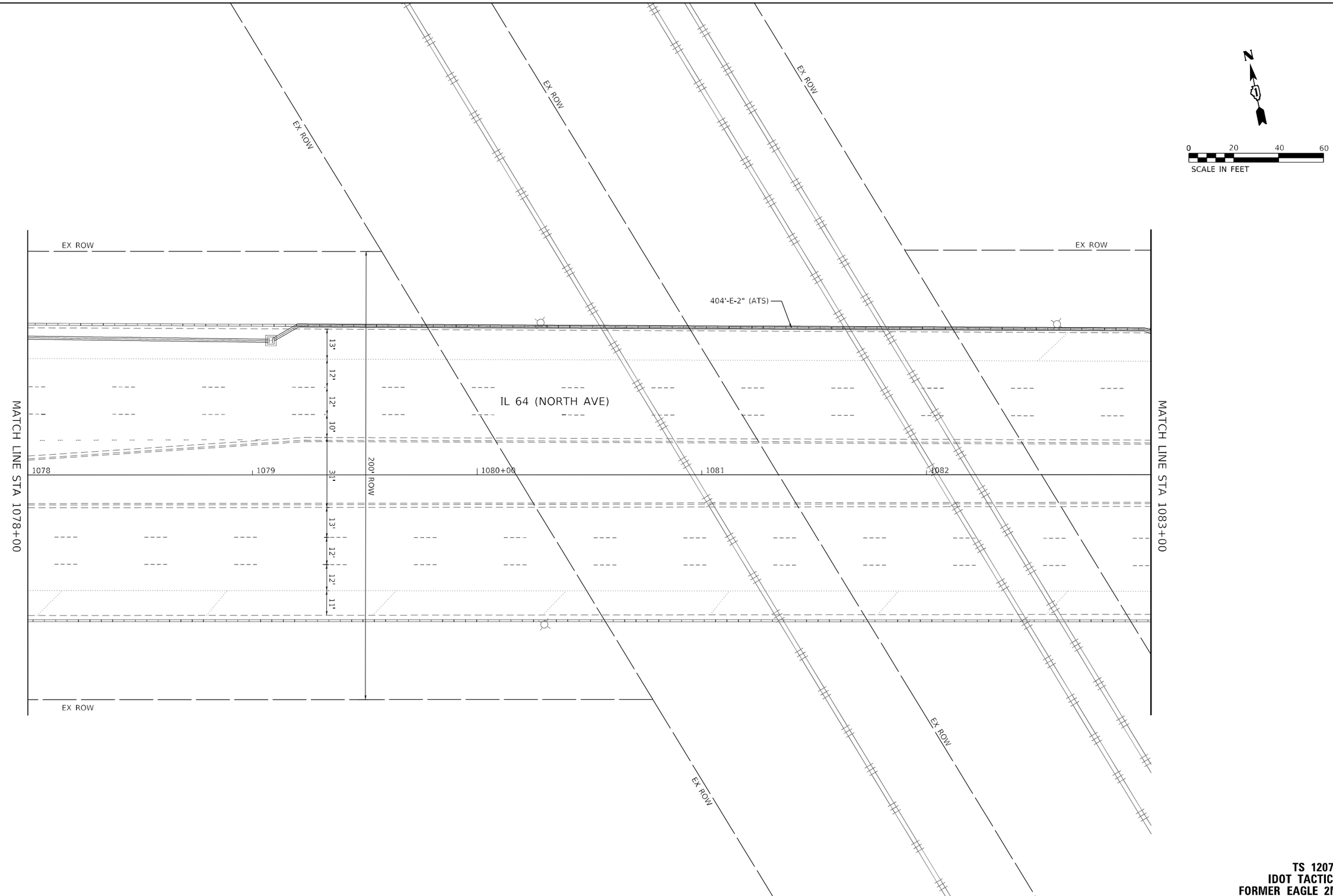

TS 12070
IDOT TACTICS
FORMER EAGLE 2M

MODEL: Default
FILE NAME: pw:\\h-pw.bentley.com:h-pw-01\Documents\01 Active Projects\NW-Cr-S-16895100 - IL 64\Phase III\2 Design\CADD\Plan Sheets\Signal\West Corridor Signal\D108121-sht4-15_KHA.dgn

Kimley»Horn
© 2023 KIMLEY-HORN AND ASSOCIATES, INC.
4201 WINFIELD ROAD, SUITE 600
WARRENVILLE, IL 60555
PHONE: 630-487-5550
WWW.KIMLEY-HORN.COM

USER NAME =	DESIGNED -	REVISED -	
	DRAWN -	REVISED -	
PLOT SCALE =	CHECKED -	REVISED -	
PLOT DATE =	DATE -	REVISED -	

STATE OF ILLINOIS
DEPARTMENT OF TRANSPORTATION

TRAFFIC SIGNAL EQUIPMENT REMOVAL PLAN
IL 64 (NORTH AVE) AND POWIS RD

SCALE: 1" = 20' | SHEET OF SHEETS | STA. TO STA.

F.A.P. RTE.	SECTION	COUNTY	TOTAL SHEETS	SHEET NO.
307	2020-263-SUR,SW&TS	DUPAGE	529	118
		CONTRACT NO. 62N33		
	ILLINOIS	FED. AID PROJECT		

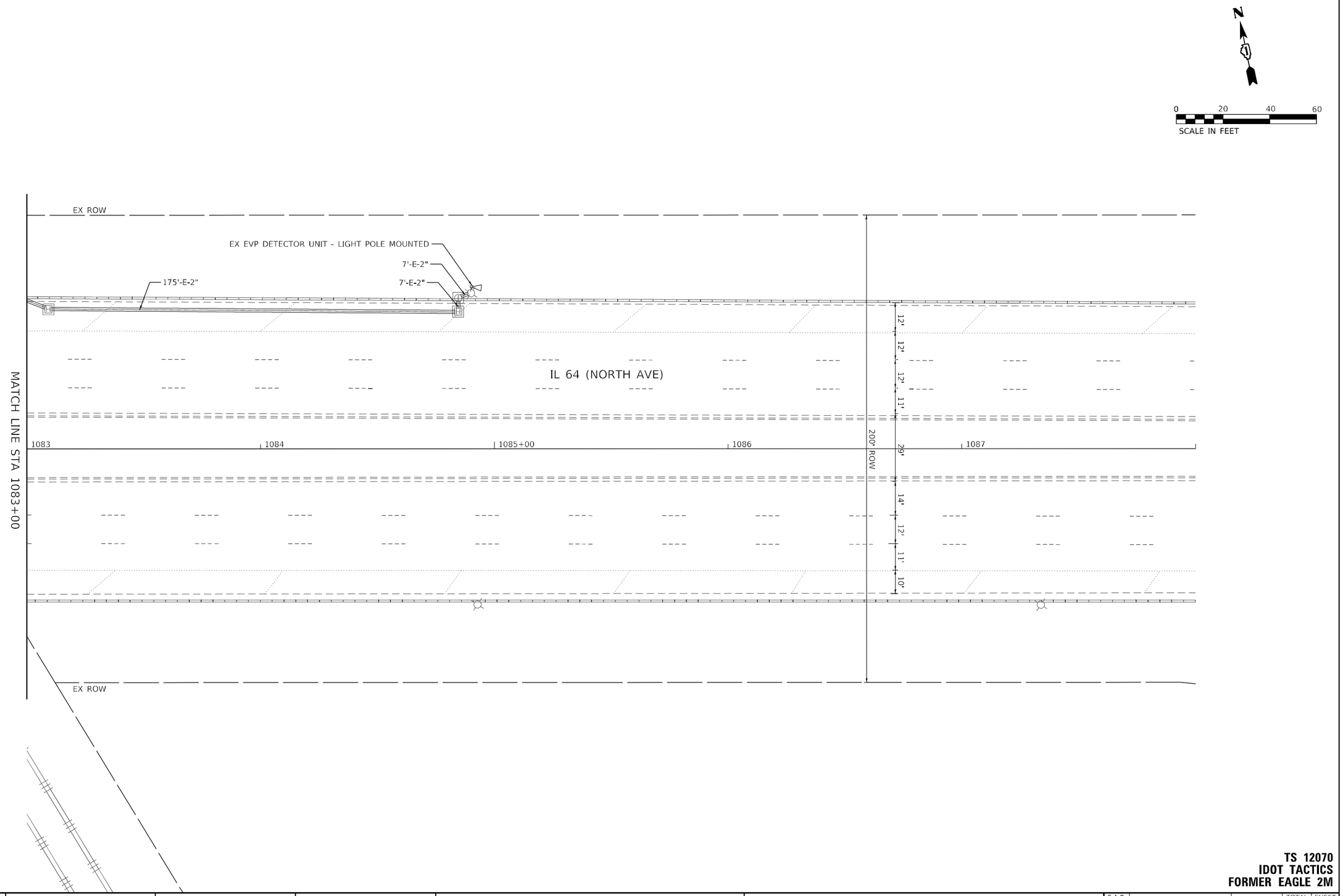

TS 12070
IDOT TACTICS
FORMER EAGLE 2M

MODEL: Default
FILE NAME: pw:\\jk-pw.bentley.com:jk-pw-01\Documents\01 Active Projects\HAWK-CI-S-1689593 00 - IL 64\Phase III\2 Design\CADD\Plan Sheets\Signal\West Corridor Signal\D108121-sht4-s16_KHA.dgn

Kimley»Horn

© 2023 KIMLEY-HORN AND ASSOCIATES, INC.
4001 WINFIELD ROAD, SUITE 600
WARRENVILLE, IL 60555
PHONE: 630-487-5550
WWW.KIMLEY-HORN.COM

USER NAME =	DESIGNED -	REVISED -	
	DRAWN -	REVISED -	
PLOT SCALE =	CHECKED -	REVISED -	
PLOT DATE =	DATE -	REVISED -	

STATE OF ILLINOIS
DEPARTMENT OF TRANSPORTATION

TRAFFIC SIGNAL EQUIPMENT REMOVAL PLAN
IL 64 (NORTH AVE) AND POWIS RD

SCALE: 1" = 20' | SHEET OF SHEETS | STA. TO STA.

F.A.P. RTE.	SECTION	COUNTY	TOTAL SHEETS	SHEET NO.
307	2020-263-SUR,SW&TS	DUPAGE	529	119
		CONTRACT NO. 62N33		
		ILLINOIS	FED. AID PROJECT	

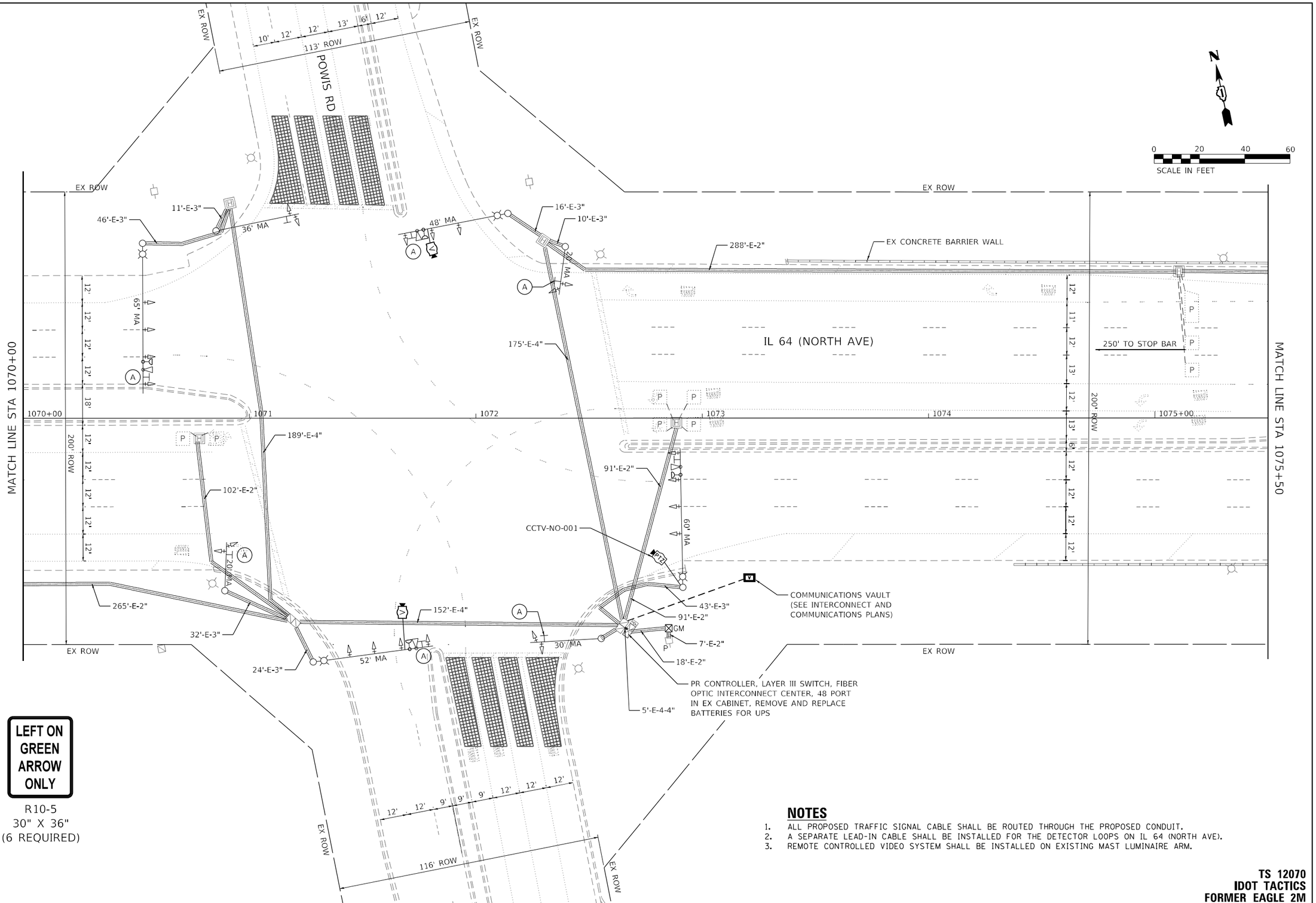

A

LEFT ON GREEN ARROW ONLY

R10-5
30" X 36"
(6 REQUIRED)

NOTES

1. ALL PROPOSED TRAFFIC SIGNAL CABLE SHALL BE ROUTED THROUGH THE PROPOSED CONDUIT.
2. A SEPARATE LEAD-IN CABLE SHALL BE INSTALLED FOR THE DETECTOR LOOPS ON IL 64 (NORTH AVE).
3. REMOTE CONTROLLED VIDEO SYSTEM SHALL BE INSTALLED ON EXISTING MAST LUMINAIRE ARM.

TS 12070
IDOT TACTICS
FORMER EAGLE 2M

MODEL: Default
FILE NAME: pw:\\kh-pw.bentley.com:kh-pw-01\Documents\01 Active Projects\MVCH-S-1689591100 - IL 64\Phase III\2 Design\CAD\Plan Sheets\Signal\West Corridor Signal\D108121-sht4-v17_KHA.dgn

Kimley»Horn
© 2020 KIMLEY-HORN AND ASSOCIATES, INC.
4201 WINFIELD ROAD, SUITE 600
WARRENVILLE, IL 60555
PHONE: 630-487-5550
WWW.KIMLEY-HORN.COM

USER NAME =	DESIGNED -	REVISED -	
	DRAWN -	REVISED -	
PLOT SCALE =	CHECKED -	REVISED -	
PLOT DATE =	DATE -	REVISED -	

STATE OF ILLINOIS
DEPARTMENT OF TRANSPORTATION

TRAFFIC SIGNAL MODERNIZATION PLAN
IL 64 (NORTH AVE) AND POWIS RD

SCALE: 1" = 20' | SHEET OF SHEETS | STA. TO STA.

F.A.P. RTE.	SECTION	COUNTY	TOTAL SHEETS	SHEET NO.
307	2020-263-SUR,SW&TS	DUPAGE	529	120
		CONTRACT NO. 62N33		
		ILLINOIS	FED. AID PROJECT	

TS 12070
IDOT TACTICS
FORMER EAGLE 2M

MODEL: Default
FILE NAME: pw:\\jk-pw.bentley.com:ch-pw-01\Documents\01 Active Projects\MW-CI-S-L69959100 - IL 64\Phase III\2 Design\CAD\Plan Sheets\Signal\West Corridor Signal\10108121-IM14-18 KHA.dgn

Kimley»Horn
© 2023 KIMLEY-HORN AND ASSOCIATES, INC.
4201 WINFIELD ROAD, SUITE 600
WARRENVILLE, IL 60555
PHONE: 630-487-5550
WWW.KIMLEY-HORN.COM

USER NAME =	DESIGNED -	REVISED -
	DRAWN -	REVISED -
PLOT SCALE =	CHECKED -	REVISED -
PLOT DATE =	DATE -	REVISED -

STATE OF ILLINOIS
DEPARTMENT OF TRANSPORTATION

TRAFFIC SIGNAL MODERNIZATION PLAN
IL 64 (NORTH AVE) AND POWIS RD

SCALE: 1" = 20' | SHEET OF SHEETS | STA. TO STA.

F.A.P. RTE.	SECTION	COUNTY	TOTAL SHEETS	SHEET NO.
307	2020-263-SUR,SW&TS	DUPAGE	529	121
		CONTRACT NO. 62N33		
	ILLINOIS	FED. AID PROJECT		

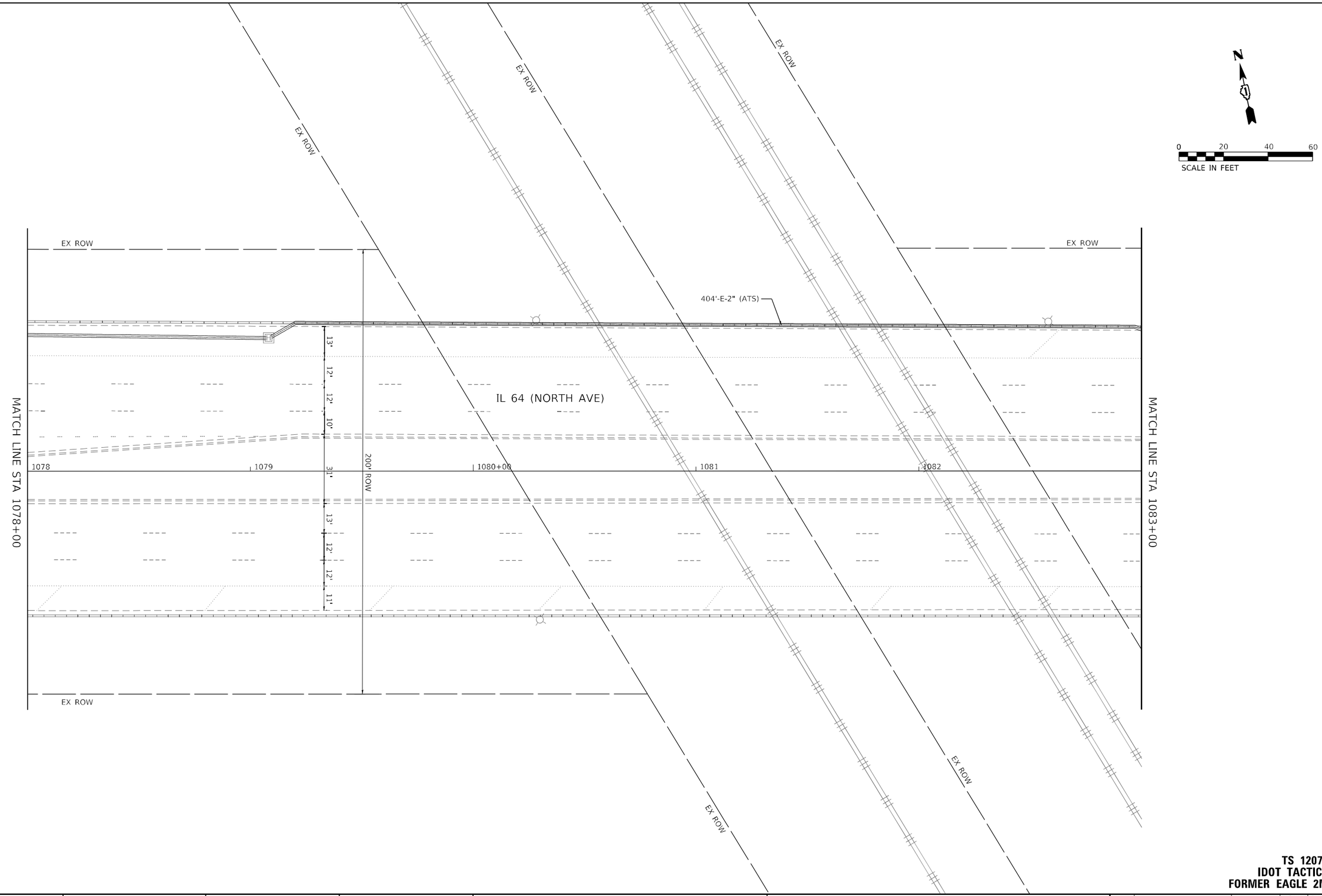

TS 12070
IDOT TACTICS
FORMER EAGLE 2M

MODEL: Default
FILE NAME: pw:\\h-pw.bentley.com:h-pw-01\Documents\01 Active Projects\MW-C-IS-16895100 - IL 64\Phase III\2 Design\CADD\Plan Sheets\Signal\West Corridor Signal\D108121-sht4-19_KHA.dgn

Kimley»Horn
© 2023 KIMLEY-HORN AND ASSOCIATES, INC.
4201 WINFIELD ROAD, SUITE 600
WARRENVILLE, IL 60555
PHONE: 630-487-5550
WWW.KIMLEY-HORN.COM

USER NAME =	DESIGNED -	REVISED -	
	DRAWN -	REVISED -	
PLOT SCALE =	CHECKED -	REVISED -	
PLOT DATE =	DATE -	REVISED -	

STATE OF ILLINOIS
DEPARTMENT OF TRANSPORTATION

TRAFFIC SIGNAL MODERNIZATION PLAN
IL 64 (NORTH AVE) AND POWIS RD

SCALE: 1" = 20' | SHEET OF SHEETS | STA. TO STA.

F.A.P. RTE.	SECTION	COUNTY	TOTAL SHEETS	SHEET NO.
307	2020-263-SUR,SW&TS	DUPAGE	529	122
		CONTRACT NO. 62N33		
	ILLINOIS	FED. AID PROJECT		

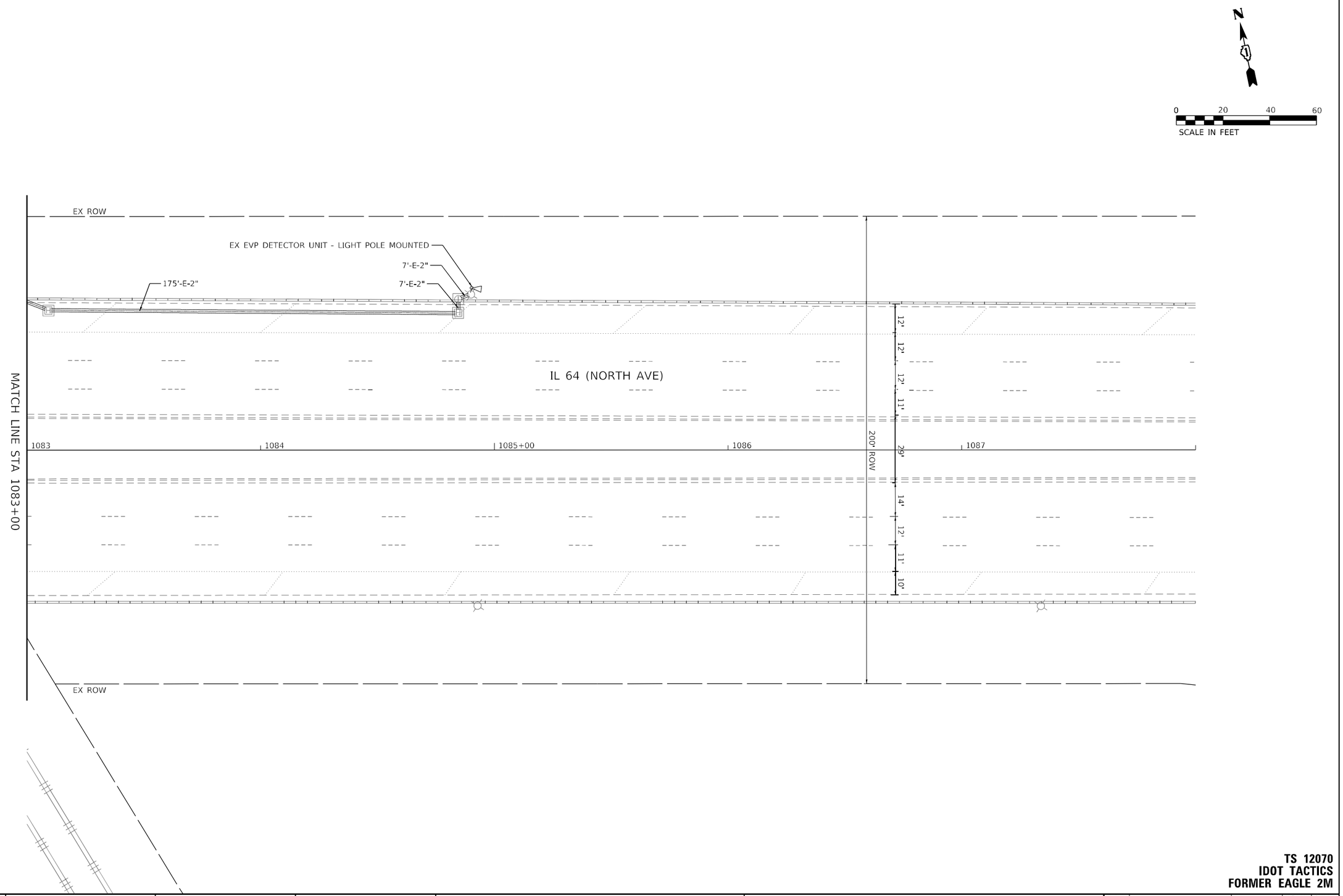

TS 12070
IDOT TACTICS
FORMER EAGLE 2M

MODEL: Default
FILE NAME: pw:\\h-pw.bentley.com:h-pw-01\Documents\01 Active Projects\NW-Cr-S-1689939100 - IL 64\Phase III\2 Design\CADD\Plan Sheets\Signal\TS01081212-sht4-20 KHA.dgn

Kimley»Horn
© 2023 KIMLEY-HORN AND ASSOCIATES, INC.
4001 WARRENVILLE ROAD, SUITE 600
WARRENVILLE, IL 60555
PHONE: 630-487-5550
WWW.KIMLEY-HORN.COM

USER NAME =	DESIGNED -	REVISED -
	DRAWN -	REVISED -
PLOT SCALE =	CHECKED -	REVISED -
PLOT DATE =	DATE -	REVISED -

STATE OF ILLINOIS
DEPARTMENT OF TRANSPORTATION

TRAFFIC SIGNAL MODERNIZATION PLAN
IL 64 (NORTH AVE) AND POWIS RD

SCALE: 1" = 20' | SHEET OF SHEETS | STA. TO STA.

F.A.P. RTE.	SECTION	COUNTY	TOTAL SHEETS	SHEET NO.
307	2020-263-SUR,SW&TS	DUPAGE	529	123
		CONTRACT NO. 62N33		
		ILLINOIS	FED. AID PROJECT	

EXISTING AND PROPOSED CONTROLLER SEQUENCE

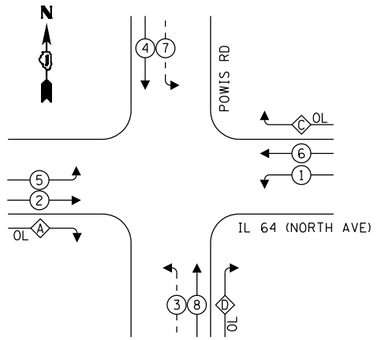

LEGEND:

- PROTECTED PHASE
- PROTECTED/PERMITTED PHASE
- PEDESTRIAN PHASE
- OL OVERLAP

OVERLAP LETTER		PERMISSIVE PHASE		PROTECTED PHASE
A	=	2	+	3
C	=	6	+	7
D	=	8	+	1

EXISTING AND PROPOSED EMERGENCY VEHICLE PREEMPTION SEQUENCE

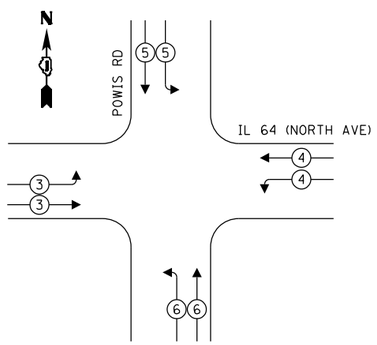

TRAFFIC SIGNAL ELECTRICAL SERVICE REQUIREMENTS

TYPE		QUANTITY	UNIT WATTAGE	TOTAL WATTAGE
SIGNAL HEAD	1 OR 3-SECTION	17	11	187
	4-SECTION	-	14	-
	5-SECTION	6	13	78
PROGRAMMABLE	3-SECTION	-	22	-
	4-SECTION	-	32	-
	5-SECTION	-	28	-
PEDESTRIAN SIGNAL		-	15	-
CONTROLLER		1	150	150
MASTER CONTROLLER		-	100	-
UPS		1	25	25
DETECTION	VIDEO	2	20	40
BLANK-OUT SIGN		-	25	-
NETWORK SWITCH	LAYER II OR III	1	35	35
CELLULAR MODEM		-	15	-
PTZ		1	75	75
		TOTAL UPS SIZING		590
UPS CHARGING		1	225	225
BATTERY HEATER MAT		1	180	180
CABINET HEATER		1	200	200
FLASHER		-	15	-
LED STREET NAME SIGN		-	120	-
LUMINAIRE		-	240	-
		TOTAL SERVICE WIRE SIZING		1195

ENERGY COSTS TO:
CITY OF WEST CHICAGO
475 MAIN ST
WEST CHICAGO, IL 60185

ENERGY SUPPLY: COMPANY: COMED
PHONE: (866) 639-3532
ACCOUNT NUMBER: 73470-49055

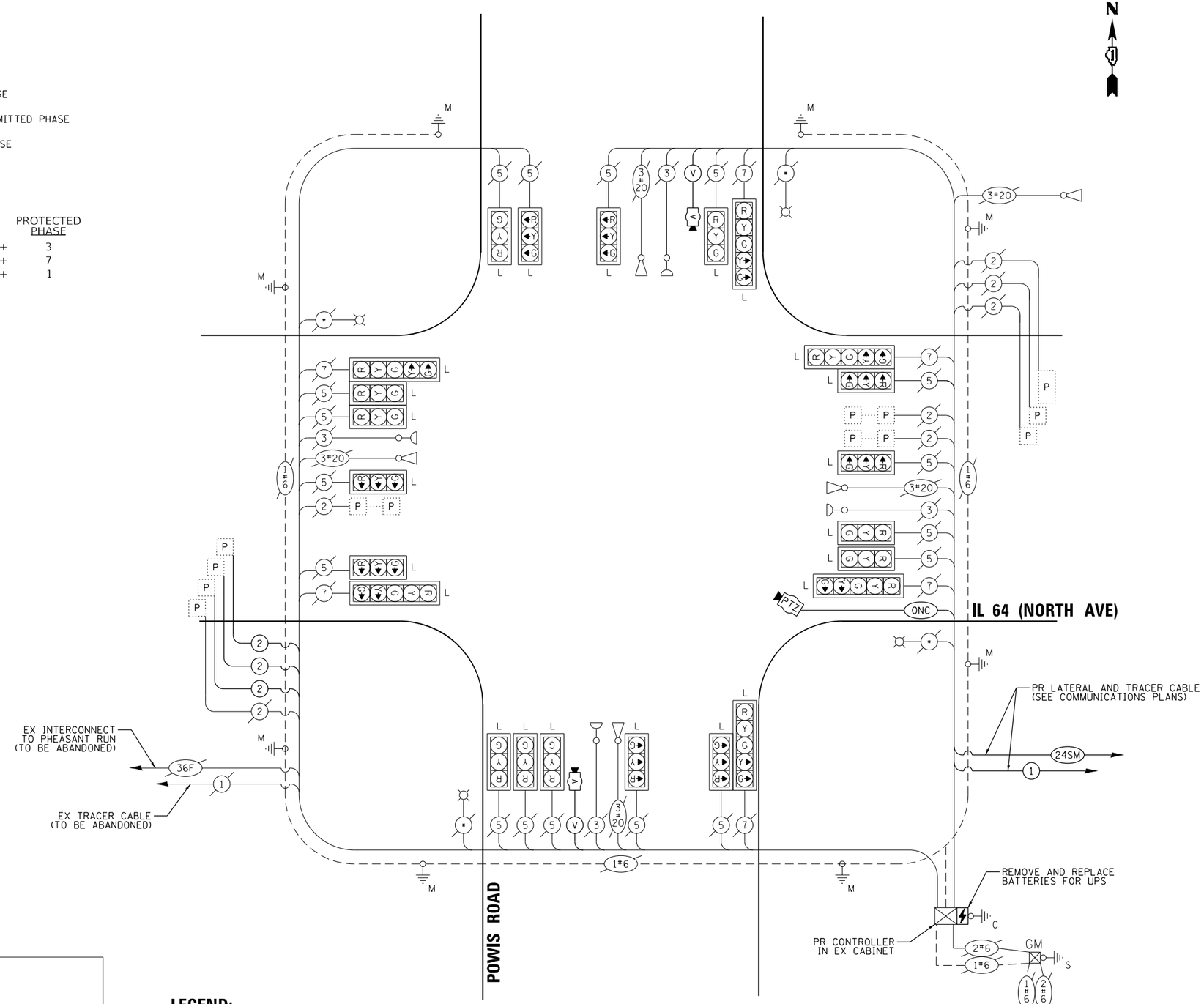

LEGEND:

L = LED LAMP MODULE REPLACEMENT
* = ROADWAY LIGHTING CABLE

CABLE PLAN

(NOT TO SCALE)

TS 12070
IDOT TACTICS
FORMER EAGLE 2M

MODEL: Default
FILE NAME: pw:\\uh-pw.bentley.com:sh-pw401\Documents\01 Active Projects\MW-CHS-1689593100 - IL 64\Phase II\2 Design\CADD\Plan Sheets\Signal\WestCorridor Signal\108121-sht-4-21 KHA.dgn

© 2022 KIMLEY-HORN AND ASSOCIATES, INC.
Kimley»Horn
4201 WINFIELD ROAD, SUITE 600
WARRENVILLE, IL 60555
PHONE: 630-487-5550
WWW.KIMLEY-HORN.COM

USER NAME =	DESIGNED -	REVISED -
	DRAWN -	REVISED -
PLOT SCALE =	CHECKED -	REVISED -
PLOT DATE =	DATE -	REVISED -

STATE OF ILLINOIS
DEPARTMENT OF TRANSPORTATION

CABLE PLAN, PHASE DESIGNATION DIAGRAM, AND EMERGENCY VEHICLE PREEMPTION SEQUENCE
IL 64 (NORTH AVE) AND POWIS RD

SCALE: N.T.S. | SHEET OF SHEETS | STA. TO STA.

F.A.P. RTE.	SECTION	COUNTY	TOTAL SHEETS	SHEET NO.
307	2020-263-SUR,SW&TS	DUPAGE	529	124
		CONTRACT NO. 62N33		
	ILLINOIS	FED. AID PROJECT		

SCHEDULE OF QUANTITIES

ITEM DESCRIPTION	UNIT	QUANTITY
MAINTENANCE OF EXISTING TRAFFIC SIGNAL INSTALLATION	EACH	1
ELECTRIC CABLE IN CONDUIT, LEAD-IN, NO. 14 1 PAIR	FOOT	1317
INDUCTIVE LOOP DETECTOR	EACH	3
REMOVE EXISTING TRAFFIC SIGNAL EQUIPMENT	EACH	1
REMOVE EXISTING HANDHOLE	EACH	2
CLOSED CIRCUIT TELEVISION DOME CAMERA, HD	EACH	1
LED LAMP MODULE REPLACEMENT	EACH	81
OUTDOOR RATED NETWORK CABLE	FOOT	94
REMOTE CONTROLLED VIDEO SYSTEM	EACH	1
LAYER II (DATALINK) SWITCH	EACH	1
TERMINATE FIBER IN CABINET	EACH	12
TACTICS LICENSE EXPANSION	EACH	1
FULL-ACTUATED CONTROLLER IN EXISTING CABINET	EACH	1
REMOVE AND REPLACE BATTERIES FOR UNINTERUPTABLE POWER SUPPLY, EXTENDED	EACH	1
FIBER OPTIC INTERCONNECT CENTER, 48 PORT	EACH	1
LED SIGNAL FACE, LENS COVER	EACH	23
VIDEO VEHICLE DETECTION SYSTEM, SINGLE APPROACH	EACH	2
CAMERA MOUNTING ASSEMBLY	EACH	1

TS 12070
IDOT TACTICS
FORMER EAGLE 2M

MODEL: Default
FILE NAME: pw:\\kh-pw.bentley.com:kh-pw4\Documents\01 Active Projects\IMW-CHS-168959100 - IL 64\Phase III\2 Design\CADD\Plan Sheets\Signals\IL\West Corridor Signals\01012121-sn14-22-KHA.dgn

Kimley»Horn
© 2022 KIMLEY-HORN AND ASSOCIATES, INC.
4201 WINFIELD ROAD, SUITE 600
WARRENVILLE, IL 60555
PHONE: 630-487-5550
WWW.KIMLEY-HORN.COM

USER NAME =	DESIGNED -	REVISED -
	DRAWN -	REVISED -
PLOT SCALE =	CHECKED -	REVISED -
PLOT DATE =	DATE -	REVISED -

STATE OF ILLINOIS
DEPARTMENT OF TRANSPORTATION

SCHEDULE OF QUANTITIES
IL 64 (NORTH AVE) AND POWIS RD

SCALE: N.T.S. | SHEET OF SHEETS | STA. TO STA.

F.A.P. RTE.	SECTION	COUNTY	TOTAL SHEETS	SHEET NO.
307	2020-263-SUR,SW&TS	DUPAGE	529	125
		CONTRACT NO. 62N33		
		ILLINOIS	FED. AID PROJECT	

NOTES

1. THE EXISTING TRAFFIC SIGNAL EQUIPMENT SHALL NOT BE REMOVED UNTIL THE PROPOSED TRAFFIC SIGNAL EQUIPMENT IS FULLY OPERATIONAL OR AS DIRECTED BY THE ENGINEER.
2. ALL EXISTING TRAFFIC SIGNAL CABLE NO LONGER REQUIRED SHALL BE REMOVED.
3. THE EXISTING SERVICE METER SHALL BE RELOCATED TO THE PROPOSED GROUND MOUNTED SERVICE CABINET. THE EXISTING SERVICE METER HOUSING SHALL REMAIN AT THE EXISTING TRAFFIC SIGNAL CONTROLLER CABINET AND ALL HOLES BETWEEN THE EXISTING HOUSING AND THE EXISTING CABINET SHALL BE PLUGGED. THIS WORK SHALL BE INCLUDED IN THE PAY ITEM "SERVICE INSTALLATION, GROUND MOUNTED, METERED".

REMOVAL NOTES

THE FOLLOWING ITEMS SHALL BE REMOVED BY THE CONTRACTOR AND SHALL BE DISPOSED OF BY THEM OUTSIDE THE RIGHT-OF-WAY AT THEIR EXPENSE. THE SALVAGE VALUE OF THE REMOVED EQUIPMENT SHALL BE REFLECTED IN THE CONTRACT BID PRICE.

1	EACH	TRAFFIC SIGNAL POST
2	EACH	SIGNAL HEAD, 1 FACE, 3 SECTION
2	EACH	STREET NAME SIGN PANEL

THE FOLLOWING ITEMS SHALL BE REMOVED BY THE CONTRACTOR, SHALL REMAIN THE PROPERTY OF THE ILLINOIS DEPARTMENT OF TRANSPORTATION, AND SHALL BE DELIVERED BY THE CONTRACTOR TO IDOT'S TRAFFIC SIGNAL MAINTENANCE CONTRACTOR'S MAIN FACILITY.

1	EACH	CONTROLLER (M52)

N

0 20 40 60
SCALE IN FEET

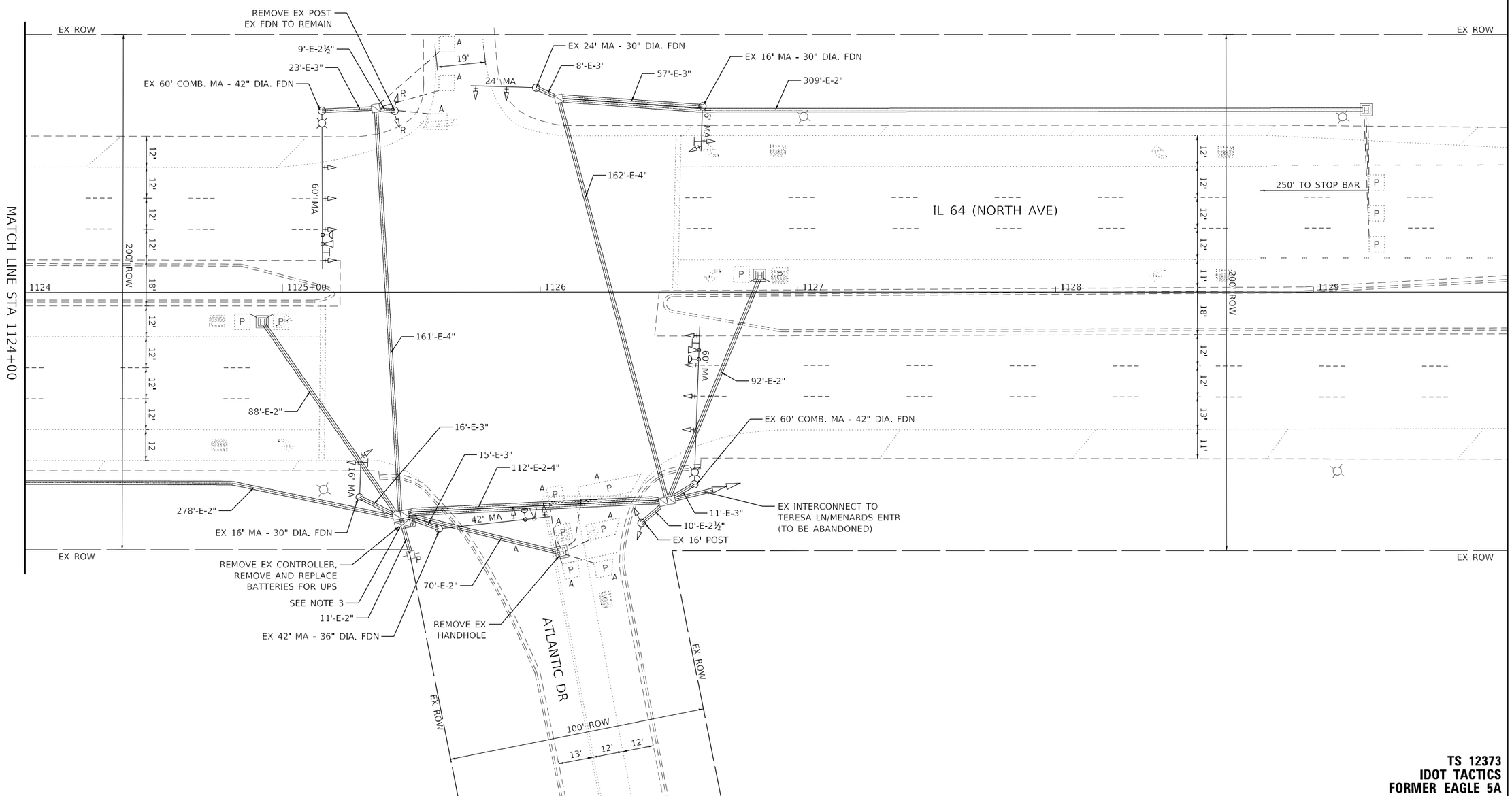

TS 12373
IDOT TACTICS
FORMER EAGLE 5A

MODEL: Default
FILE NAME: pw:\\ih-pw.bentley.com:ih-pw-01\Documents\01 Active Projects\MV-CI-S-168959100 - IL 64\Phase II\2 Design\CAD\Plan Sheets\Signal\West Corridor Signal\D1081213-sht1-23_KHA.dgn

Kimley»Horn
© 2022 KIMLEY-HORN AND ASSOCIATES, INC.
4201 WINFIELD ROAD, SUITE 600
WARRENVILLE, IL 60555
PHONE: 630-487-5550
WWW.KIMLEY-HORN.COM

USER NAME =	DESIGNED -	REVISED -	
	DRAWN -	REVISED -	
PLOT SCALE =	CHECKED -	REVISED -	
PLOT DATE =	DATE -	REVISED -	

STATE OF ILLINOIS
DEPARTMENT OF TRANSPORTATION

TRAFFIC SIGNAL EQUIPMENT REMOVAL PLAN
IL 64 (NORTH AVE) AND ATLANTIC DR

SCALE: 1" = 20' | SHEET OF SHEETS | STA. TO STA.

F.A.P. RTE.	SECTION	COUNTY	TOTAL SHEETS	SHEET NO.
307	2020-263-SUR,SW&TS	DUPAGE	529	126
		CONTRACT NO. 62N33		
		ILLINOIS	FED. AID PROJECT	

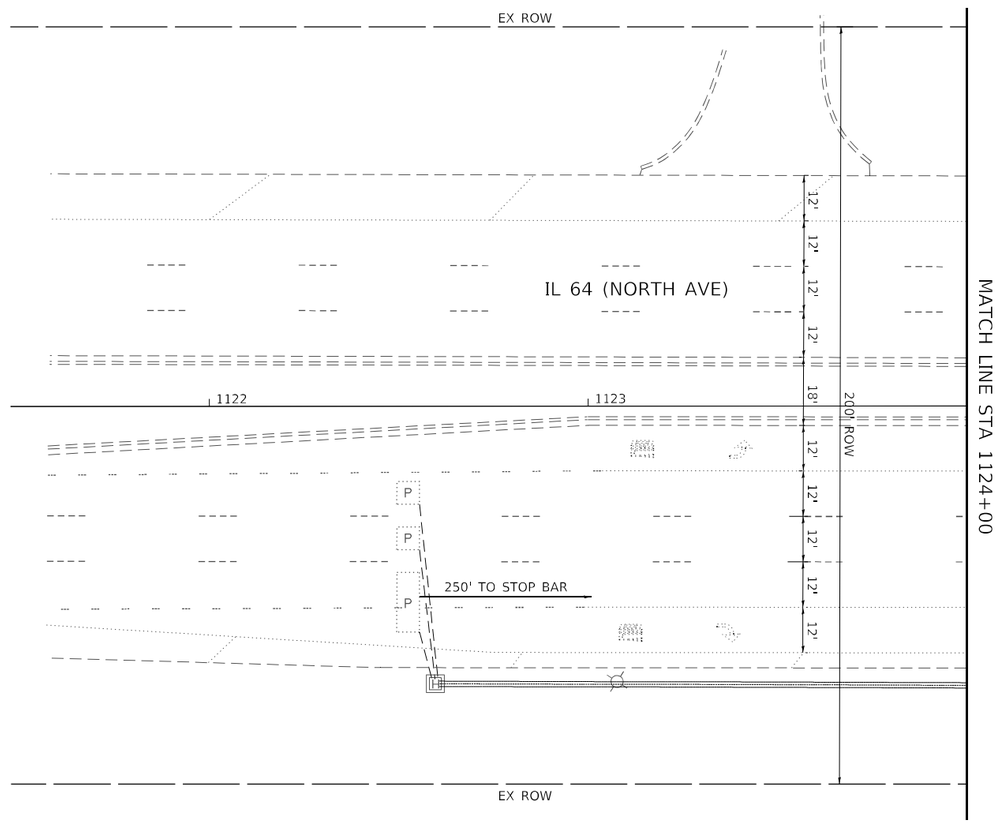

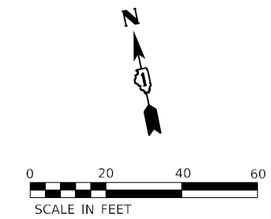

TS 12373
IDOT TACTICS
FORMER EAGLE 5A

MODEL: Default
FILE NAME: pw:\\lh-pw.bentley.com:lh-pw-01\Documents\01 Active Projects\MW-Cr-S-168959100 - IL 64\Phase III\2 Design\CADd\Plan Sheets\Signals\West Corridor Signals\D108121-sht4-24_KHA.dgn

Kimley»Horn
© 2022 KIMLEY-HORN AND ASSOCIATES, INC.
4201 WINFIELD ROAD, SUITE 600
WARRENVILLE, IL 60555
PHONE: 630-487-5550
WWW.KIMLEY-HORN.COM

USER NAME =	DESIGNED -	REVISED -
	DRAWN -	REVISED -
PLOT SCALE =	CHECKED -	REVISED -
PLOT DATE =	DATE -	REVISED -

STATE OF ILLINOIS
DEPARTMENT OF TRANSPORTATION

TRAFFIC SIGNAL EQUIPMENT REMOVAL PLAN
IL 64 (NORTH AVE) AND ATLANTIC DR

SCALE: 1" = 20' | SHEET OF SHEETS | STA. TO STA.

F.A.P. RTE.	SECTION	COUNTY	TOTAL SHEETS	SHEET NO.
307	2020-263-SUR,SW&TS	DUPAGE	529	127
		CONTRACT NO. 62N33		
	ILLINOIS	FED. AID PROJECT		

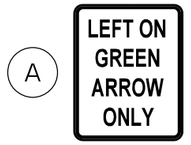

R10-5
30" X 36"
(4 REQUIRED)

NOTES

1. ALL PROPOSED TRAFFIC SIGNAL CABLE SHALL BE ROUTED THROUGH THE PROPOSED CONDUIT.
2. A SEPARATE LEAD-IN CABLE SHALL BE INSTALLED FOR THE DETECTOR LOOPS ON IL 64 (NORTH AVE).
3. PROPOSED CONDUIT SHALL BE SPLICED TO THE EXISTING CONDUIT AND EXTENDED VERTICALLY THROUGH THE PROPOSED FOUNDATION AT THE GROUND MOUNTED SERVICE LOCATION. THE COST OF THE CONDUIT SHALL BE INCLUDED IN THE COST OF "CONCRETE FOUNDATION, TYPE A".

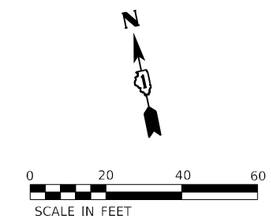

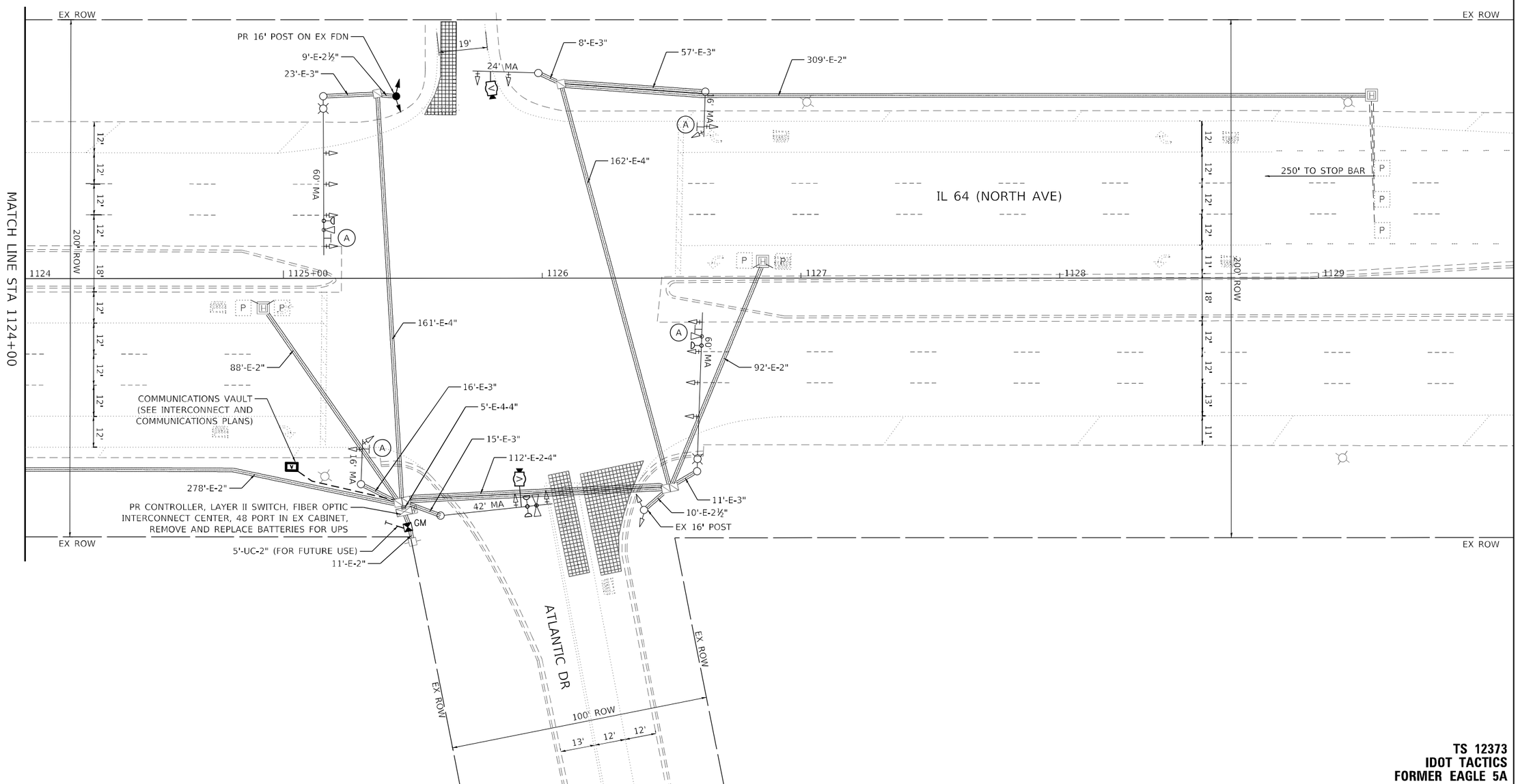

TS 12373
IDOT TACTICS
FORMER EAGLE 5A

MODEL: Default
FILE NAME: pw:\\ih-pw.bentley.com:ih-pw-01\Documents\01 Active Projects\MV-CI-S-168959100 - IL 64\Phase III\2 Design\CADD\Plan Sheets\Signal\West Corridor Signal\D1081213-int3-25 KHA.dgn

Kimley»Horn
© 2022 KIMLEY-HORN AND ASSOCIATES, INC.
4201 WINFIELD ROAD, SUITE 600
WARRENVILLE, IL 60555
PHONE: 630-487-5550
WWW.KIMLEY-HORN.COM

USER NAME =	DESIGNED -	REVISED -
	DRAWN -	REVISED -
PLOT SCALE =	CHECKED -	REVISED -
PLOT DATE =	DATE -	REVISED -

STATE OF ILLINOIS
DEPARTMENT OF TRANSPORTATION

TRAFFIC SIGNAL MODERNIZATION PLAN
IL 64 (NORTH AVE) AND ATLANTIC DR

SCALE: 1" = 20' | SHEET OF SHEETS | STA. TO STA.

F.A.P. RTE.	SECTION	COUNTY	TOTAL SHEETS	SHEET NO.
307	2020-263-SUR,SW&TS	DUPAGE	529	128
		CONTRACT NO. 62N33		
		ILLINOIS	FED. AID PROJECT	

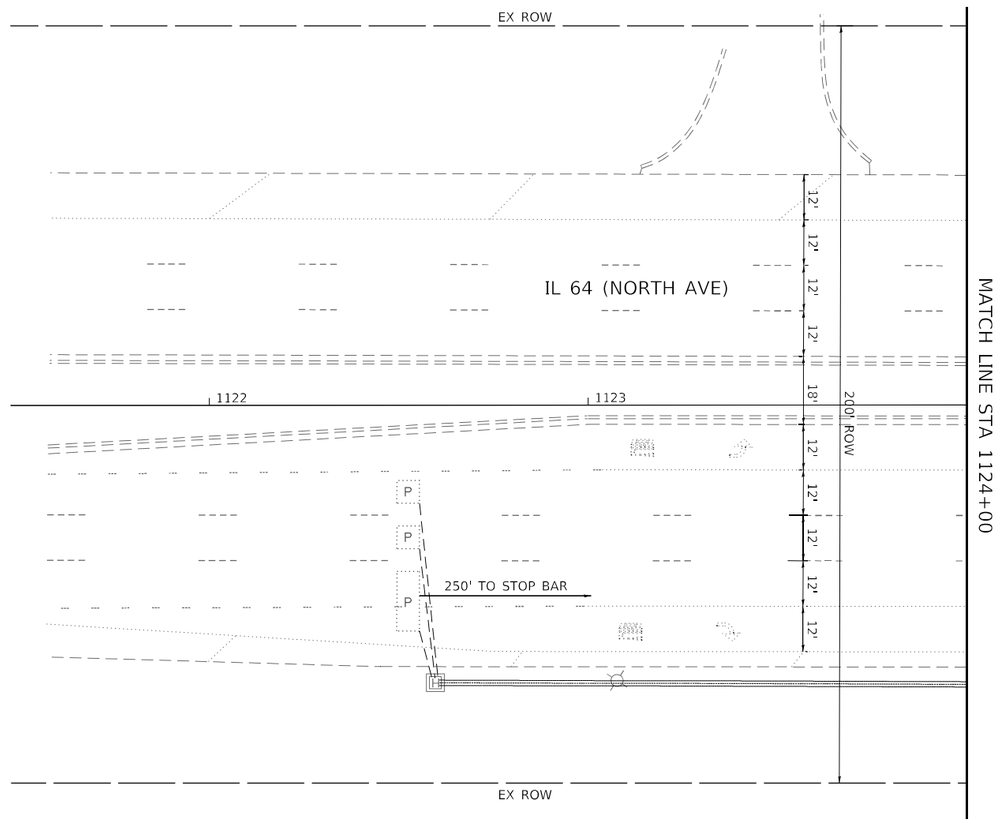

N

0 20 40 60
SCALE IN FEET

TS 12373
IDOT TACTICS
FORMER EAGLE 5A

MODEL: Default
FILE NAME: pw:\\lh-pw.bentley.com:lh-pw-01\Documents\01 Active Projects\MW-Cr-S-168959100 - IL 64\Phase III\2 Design\CADd\Plan Sheets\Signals\West Corridor Signals\D108121-sht4-26_KHA.dgn

Kimley»Horn
© 2022 KIMLEY-HORN AND ASSOCIATES, INC.
4001 WINFIELD ROAD, SUITE 600
WARRENVILLE, IL 60555
PHONE: 630-487-5550
WWW.KIMLEY-HORN.COM

USER NAME =	DESIGNED -	REVISED -
	DRAWN -	REVISED -
PLOT SCALE =	CHECKED -	REVISED -
PLOT DATE =	DATE -	REVISED -

STATE OF ILLINOIS
DEPARTMENT OF TRANSPORTATION

TRAFFIC SIGNAL MODERNIZATION PLAN
IL 64 (NORTH AVE) AND ATLANTIC DR

SCALE: 1" = 20' | SHEET OF SHEETS | STA. TO STA.

F.A.P. RTE.	SECTION	COUNTY	TOTAL SHEETS	SHEET NO.
307	2020-263-SUR,SW&TS	DUPAGE	529	129
		CONTRACT NO. 62N33		
		ILLINOIS	FED. AID PROJECT	

EXISTING AND PROPOSED CONTROLLER SEQUENCE

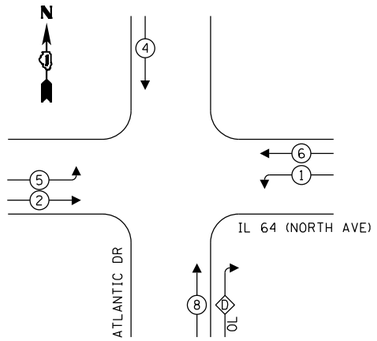

LEGEND:

- PROTECTED PHASE
- PROTECTED/PERMITTED PHASE
- PEDESTRIAN PHASE
- OL OVERLAP

OVERLAP LETTER		PERMISSIVE PHASE		PROTECTED PHASE
D	=	8	+	1

EXISTING AND PROPOSED EMERGENCY VEHICLE PREEMPTION SEQUENCE

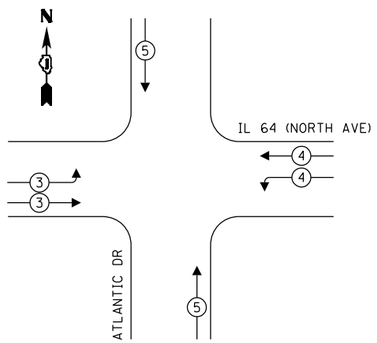

TRAFFIC SIGNAL ELECTRICAL SERVICE REQUIREMENTS

TYPE		QUANTITY	UNIT WATTAGE	TOTAL WATTAGE
SIGNAL HEAD	1 OR 3-SECTION	18	11	198
	4-SECTION	-	14	-
	5-SECTION	2	13	26
PROGRAMMABLE	3-SECTION	-	22	-
	4-SECTION	-	32	-
	5-SECTION	-	28	-
PEDESTRIAN SIGNAL		-	15	-
CONTROLLER		1	150	150
MASTER CONTROLLER		-	100	-
UPS		1	25	25
DETECTION	VIDEO	2	20	40
BLANK-OUT SIGN		-	25	-
NETWORK SWITCH	LAYER II OR III	1	35	35
CELLULAR MODEM		-	15	-
PTZ		-	75	-
		TOTAL UPS SIZING		474
UPS CHARGING		1	225	225
BATTERY HEATER MAT		1	180	180
CABINET HEATER		1	200	200
FLASHER		-	15	-
LED STREET NAME SIGN		-	120	-
LUMINAIRE		-	240	-
		TOTAL SERVICE WIRE SIZING		1079

ENERGY COSTS TO:
CITY OF WEST CHICAGO
475 MAIN ST
WEST CHICAGO, IL 60185

ENERGY SUPPLY: COMPANY: COMED
PHONE: (866) 639-3532
ACCOUNT NUMBER: 73470-49055

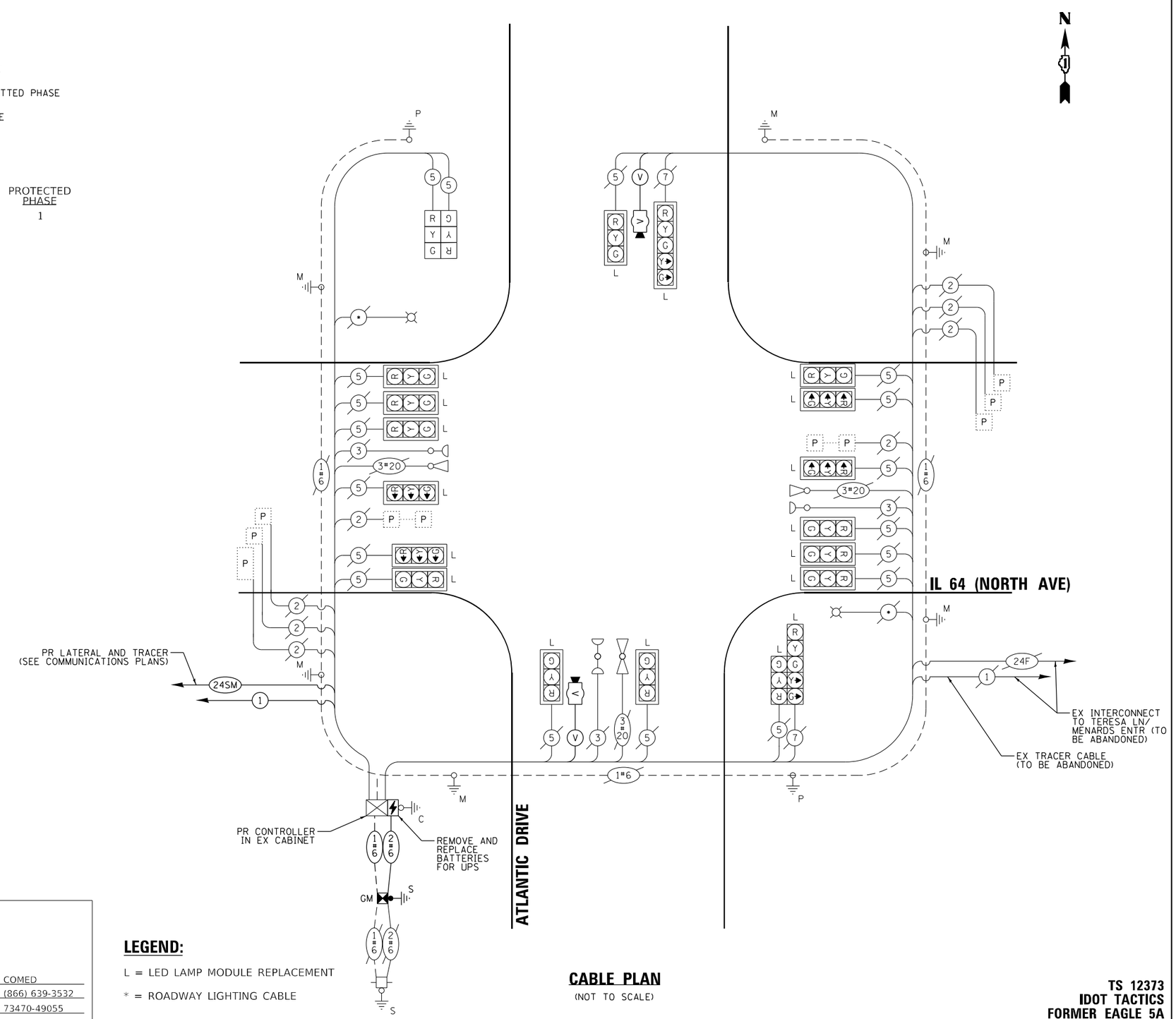

LEGEND:

L = LED LAMP MODULE REPLACEMENT

* = ROADWAY LIGHTING CABLE

CABLE PLAN

(NOT TO SCALE)

TS 12373
IDOT TACTICS
FORMER EAGLE 5A

MODEL: Default
FILE NAME: pw:\\khpw.bentley.com:khpw01\Documents\01 Active Projects\IWC-CHS-168959100 - IL 64\Phase II\2 Design\CAD\Plan Sheets\Signal\West Corridor Signal\D1081214-W14-27 KHA.dgn

Kimley»Horn
© 2022 KIMLEY-HORN AND ASSOCIATES, INC.
4201 WINFIELD ROAD, SUITE 600
WARRENVILLE, IL 60555
PHONE: 630-487-5550
WWW.KIMLEY-HORN.COM

USER NAME =	DESIGNED -	REVISED -	
	DRAWN -	REVISED -	
PLOT SCALE =	CHECKED -	REVISED -	
PLOT DATE =	DATE -	REVISED -	

STATE OF ILLINOIS
DEPARTMENT OF TRANSPORTATION

CABLE PLAN, PHASE DESIGNATION DIAGRAM, AND EMERGENCY VEHICLE PREEMPTION SEQUENCE
IL 64 (NORTH AVE) AND ATLANTIC DR

SCALE: N.T.S. | SHEET OF SHEETS | STA. TO STA.

F.A.P. RTE.	SECTION	COUNTY	TOTAL SHEETS	SHEET NO.
307	2020-263-SUR,SW&TS	DUPAGE	529	130
		CONTRACT NO. 62N33		
	ILLINOIS	FED. AID PROJECT		

SIGN PANEL – TYPE 2

ALL DIMENSIONS ARE IN INCHES UNLESS OTHERWISE NOTED

DESIGN SERIES	AREA (SQ FT)	SIGN PANEL TYPE	SHEETING TYPE	QTY. REQUIRED
D	12.5	2	ZZ	2

SCHEDULE OF QUANTITIES

ITEM DESCRIPTION	UNIT	QUANTITY
SIGN PANEL - TYPE 2	SQ FT	25
UNDERGROUND CONDUIT, GALVANIZED STEEL, 2" DIA.	FOOT	5
MAINTENANCE OF EXISTING TRAFFIC SIGNAL INSTALLATION	EACH	1
ELECTRIC CABLE IN CONDUIT, SERVICE, NO. 6 2 C	FOOT	38
ELECTRIC CABLE IN CONDUIT, EQUIPMENT GROUNDING CONDUCTOR, NO. 6 1C	FOOT	38
TRAFFIC SIGNAL POST, GALVANIZED STEEL 16 FT.	EACH	1
CONCRETE FOUNDATION, TYPE A	FOOT	4
SIGNAL HEAD, LED, 1-FACE, 3-SECTION, BRACKET MOUNTED	EACH	2
REMOVE ELECTRIC CABLE FROM CONDUIT	FOOT	38
REMOVE EXISTING TRAFFIC SIGNAL EQUIPMENT	EACH	1
REMOVE EXISTING HANDHOLE	EACH	1
LED LAMP MODULE REPLACEMENT	EACH	58
SERVICE INSTALLATION, GROUND MOUNTED, METERED	EACH	1
LAYER II (DATALINK) SWITCH	EACH	1
TERMINATE FIBER IN CABINET	EACH	12
TACTICS LICENSE EXPANSION	EACH	1
FULL-ACTUATED CONTROLLER IN EXISTING CABINET	EACH	1
REMOVE AND REPLACE BATTERIES FOR UNINTERUPTABLE POWER SUPPLY, EXTENDED	EACH	1
FIBER OPTIC INTERCONNECT CENTER, 48 PORT	EACH	1
LED SIGNAL FACE, LENS COVER	EACH	20
VIDEO VEHICLE DETECTION SYSTEM, SINGLE APPROACH	EACH	2

TS 12373
IDOT TACTICS
FORMER EAGLE 5A

MODEL: Default
FILE NAME: pw:\\h-pw.bentley.com:h-pw-01\Documents\01 Active Projects\MW-Cr-S-16959100 - IL 64\Phase III\2 Design\CAD\Plan Sheets\Signal\NWest Corridor Signal\D108121-sht4-s28 KHA.dgn

Kimley»Horn
© 2023 KIMLEY-HORN AND ASSOCIATES, INC.
4201 WINFIELD ROAD, SUITE 600
WARRENVILLE, IL 60555
PHONE: 630-487-5550
WWW.KIMLEY-HORN.COM

USER NAME =	DESIGNED -	REVISED -
	DRAWN -	REVISED -
PLOT SCALE =	CHECKED -	REVISED -
PLOT DATE =	DATE -	REVISED -

STATE OF ILLINOIS
DEPARTMENT OF TRANSPORTATION

SCHEDULE OF QUANTITIES
IL 64 (NORTH AVE) AND ATLANTIC DR

SCALE: N.T.S. | SHEET OF SHEETS | STA. TO STA.

F.A.P. RTE.	SECTION	COUNTY	TOTAL SHEETS	SHEET NO.
307	2020-263-SUR,SW&TS	DUPAGE	529	131
		CONTRACT NO. 62N33		
	ILLINOIS	FED. AID PROJECT		

NOTES

1. THE EXISTING TRAFFIC SIGNAL EQUIPMENT SHALL NOT BE REMOVED UNTIL THE PROPOSED TRAFFIC SIGNAL EQUIPMENT IS FULLY OPERATIONAL OR AS DIRECTED BY THE ENGINEER.

2. ALL EXISTING TRAFFIC SIGNAL CABLE NO LONGER REQUIRED SHALL BE REMOVED.

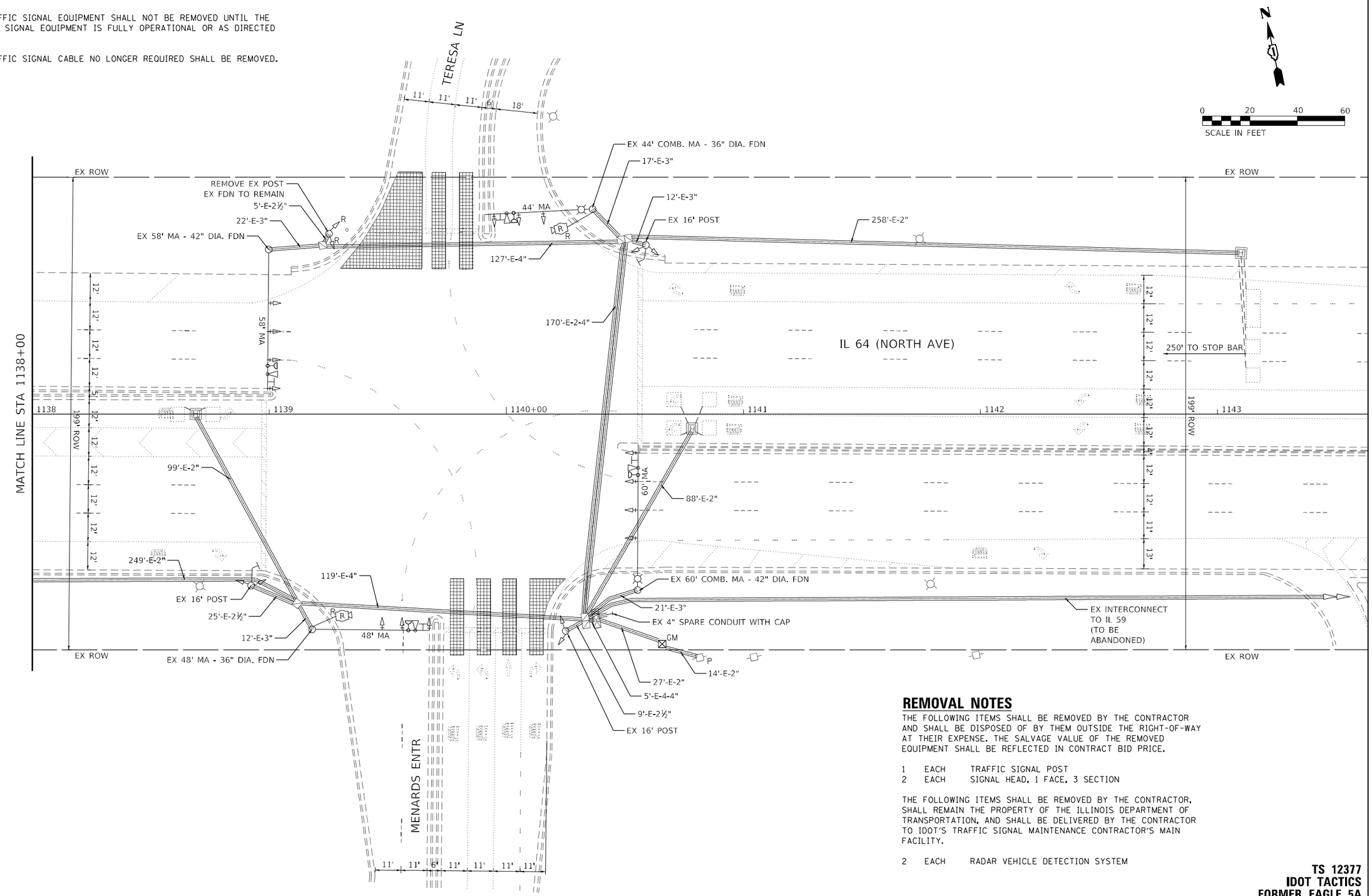

REMOVAL NOTES

THE FOLLOWING ITEMS SHALL BE REMOVED BY THE CONTRACTOR AND SHALL BE DISPOSED OF BY THEM OUTSIDE THE RIGHT-OF-WAY AT THEIR EXPENSE. THE SALVAGE VALUE OF THE REMOVED EQUIPMENT SHALL BE REFLECTED IN CONTRACT BID PRICE.

1	EACH	TRAFFIC SIGNAL POST
2	EACH	SIGNAL HEAD, 1 FACE, 3 SECTION

THE FOLLOWING ITEMS SHALL BE REMOVED BY THE CONTRACTOR, SHALL REMAIN THE PROPERTY OF THE ILLINOIS DEPARTMENT OF TRANSPORTATION, AND SHALL BE DELIVERED BY THE CONTRACTOR TO IDOT'S TRAFFIC SIGNAL MAINTENANCE CONTRACTOR'S MAIN FACILITY.

2	EACH	RADAR VEHICLE DETECTION SYSTEM

TS 12377
IDOT TACTICS
FORMER EAGLE 5A

MODEL: Default
FILE NAME: pw:\\jk-pw.bentley.com:ch-pw-01\Documents\01 Active Projects\MW-CI-S-1689591 00 - IL 64\Phase III 2 Design\CADD\Plan Sheets\Signal\West Corridor Signal\D1081215-SH14-29 KHA.dgn

Kimley»Horn
© 2023 KIMLEY-HORN AND ASSOCIATES, INC.
4201 WINFIELD ROAD, SUITE 600
WARRENVILLE, IL 60555
PHONE: 630-487-5550
WWW.KIMLEY-HORN.COM

USER NAME =	DESIGNED -	REVISED -	
	DRAWN -	REVISED -	
PLOT SCALE =	CHECKED -	REVISED -	
PLOT DATE =	DATE -	REVISED -	

STATE OF ILLINOIS
DEPARTMENT OF TRANSPORTATION

TRAFFIC SIGNAL EQUIPMENT REMOVAL PLAN
IL 64 (NORTH AVE) AND TERESA LN/MENARDS ENTR

SCALE: 1" = 20' | SHEET OF SHEETS | STA. TO STA.

F.A.P. RTE.	SECTION	COUNTY	TOTAL SHEETS	SHEET NO.
307	2020-263-SUR,SW&TS	DUPAGE	529	132
		CONTRACT NO. 62N33		
	ILLINOIS	FED. AID PROJECT		

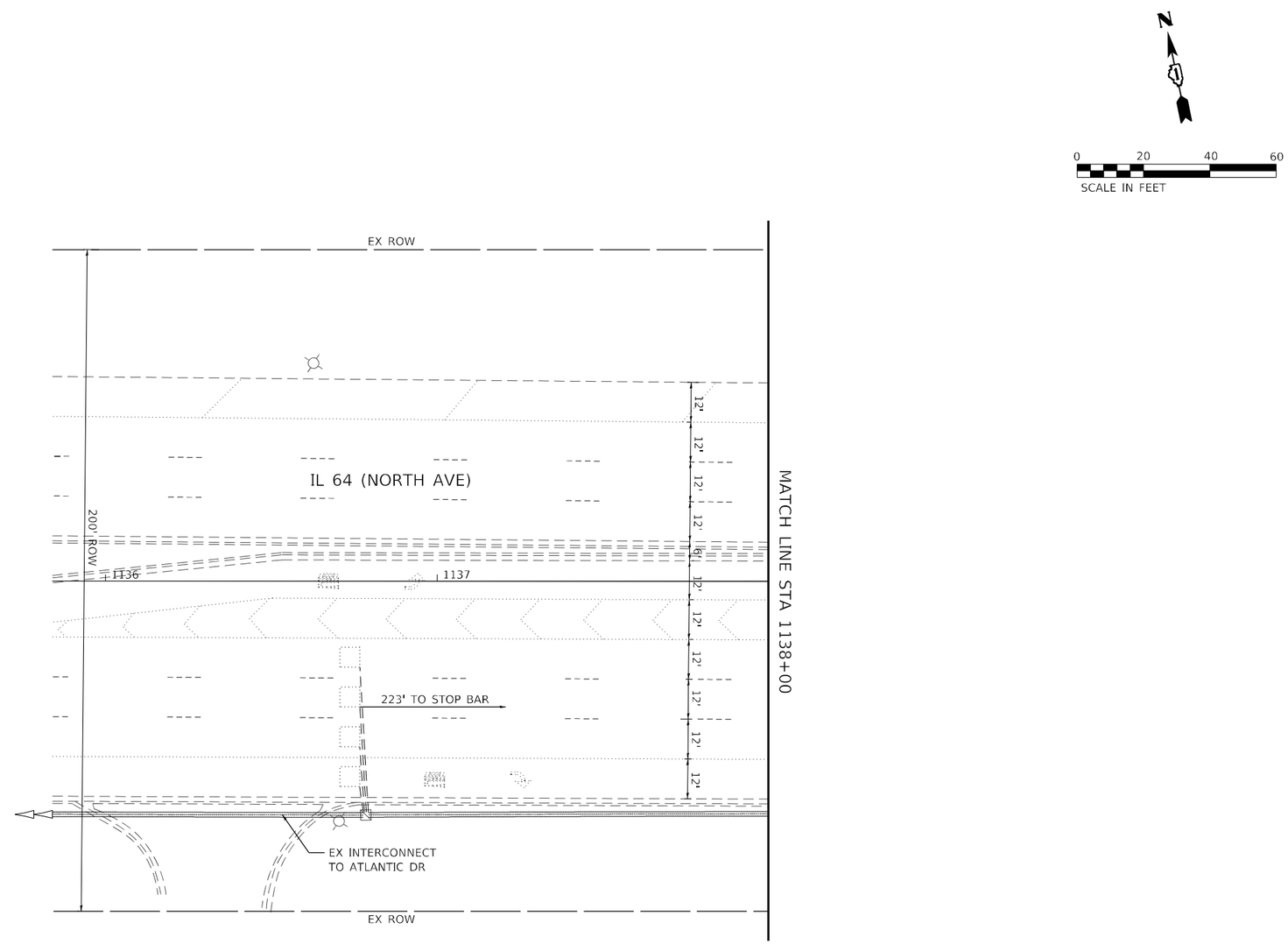

TS 12377
IDOT TACTICS
FORMER EAGLE 5A

MODEL: Default
FILE NAME: pw:\\jk-pw.bentley.com:jk-pw-01\Documents\01 Active Projects\HAWK-CI-S-1689593100 - IL 64\Phase III\2 Design\CADD\Plan Sheets\Signal\West Corridor Signal\D108121-sht4-30_KHA.dgn

Kimley»Horn

© 2023 KIMLEY-HORN AND ASSOCIATES, INC.
4201 WINFIELD ROAD, SUITE 600
WARRENVILLE, IL 60555
PHONE: 630-487-5550
WWW.KIMLEY-HORN.COM

USER NAME =	DESIGNED -	REVISED -
	DRAWN -	REVISED -
PLOT SCALE =	CHECKED -	REVISED -
PLOT DATE =	DATE -	REVISED -

STATE OF ILLINOIS
DEPARTMENT OF TRANSPORTATION

TRAFFIC SIGNAL EQUIPMENT REMOVAL PLAN
IL 64 (NORTH AVE) AND TERESA LN/MENARDS ENTR

SCALE: 1" = 20' | SHEET OF SHEETS | STA. TO STA.

F.A.P. RTE.	SECTION	COUNTY	TOTAL SHEETS	SHEET NO.
307	2020-263-SUR,SW&TS	DUPAGE	529	133
		CONTRACT NO. 62N33		
	ILLINOIS	FED. AID PROJECT		

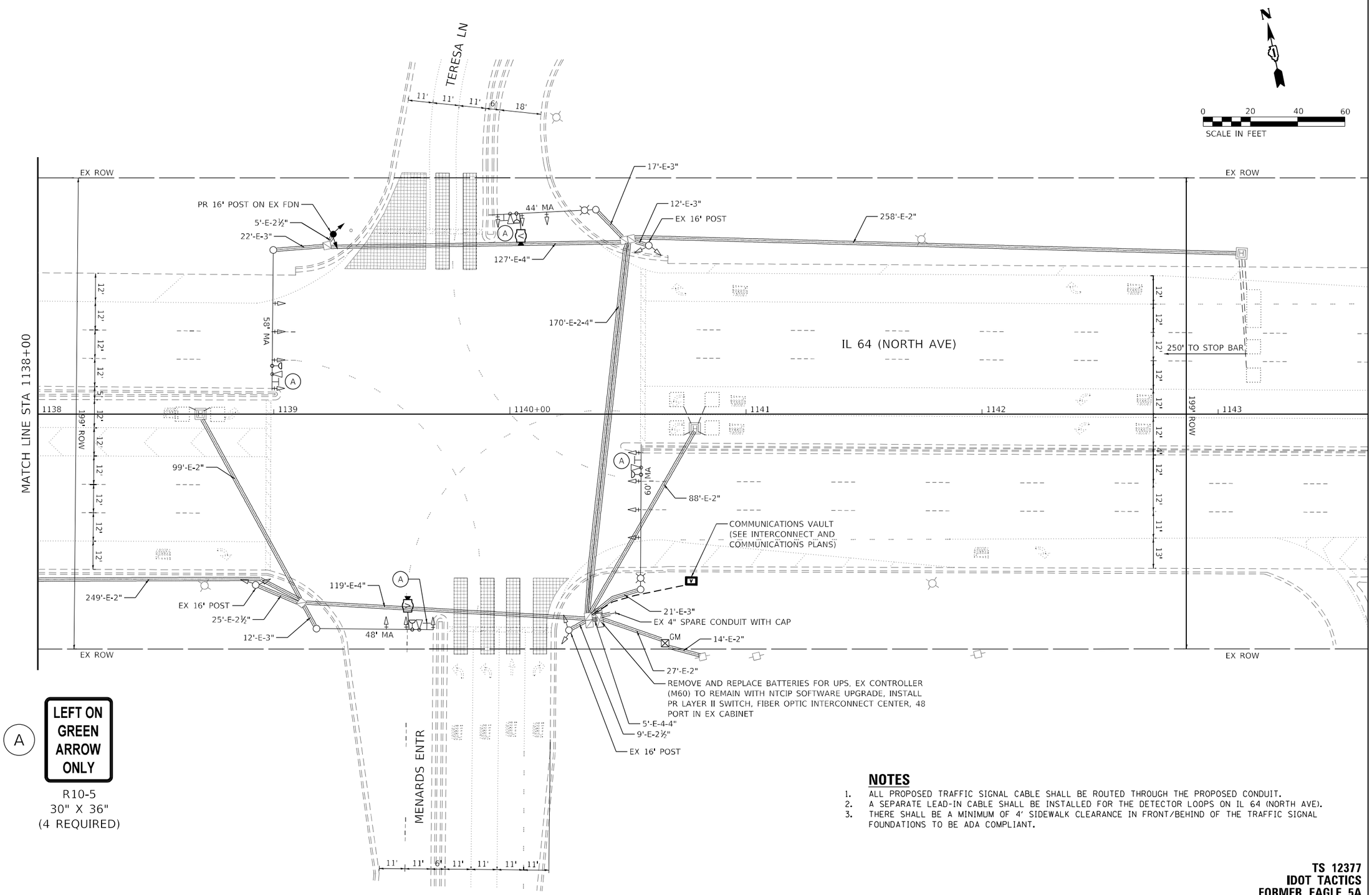

NOTES

1. ALL PROPOSED TRAFFIC SIGNAL CABLE SHALL BE ROUTED THROUGH THE PROPOSED CONDUIT.
2. A SEPARATE LEAD-IN CABLE SHALL BE INSTALLED FOR THE DETECTOR LOOPS ON IL 64 (NORTH AVE).
3. THERE SHALL BE A MINIMUM OF 4' SIDEWALK CLEARANCE IN FRONT/BEHIND OF THE TRAFFIC SIGNAL FOUNDATIONS TO BE ADA COMPLIANT.

TS 12377
IDOT TACTICS
FORMER EAGLE 5A

MODEL: Default
FILE NAME: pw:\\jh-pw.bentley.com:ch-pw-01\Documents\01 Active Projects\MW-CI-S-1689591\00 - IL 64\Phase III\2 Design\CAD\Plan Sheets\Signal\West Corridor Signal\D108121-sht4-s31 KHA.dgn

Kimley»Horn
© 2023 KIMLEY-HORN AND ASSOCIATES, INC.
4201 WINFIELD ROAD, SUITE 600
WARRENVILLE, IL 60555
PHONE: 630-487-5550
WWW.KIMLEY-HORN.COM

USER NAME =	DESIGNED -	REVISED -	
	DRAWN -	REVISED -	
PLOT SCALE =	CHECKED -	REVISED -	
PLOT DATE =	DATE -	REVISED -	

STATE OF ILLINOIS
DEPARTMENT OF TRANSPORTATION

TRAFFIC SIGNAL MODERNIZATION PLAN
IL 64 (NORTH AVE) AND TERESA LN/MENARDS ENTR

SCALE: 1" = 20' | SHEET OF SHEETS | STA. TO STA.

F.A.P. RTE.	SECTION	COUNTY	TOTAL SHEETS	SHEET NO.
307	2020-263-SUR,SW&TS	DUPAGE	529	134
		CONTRACT NO. 62N33		
	ILLINOIS	FED. AID PROJECT		

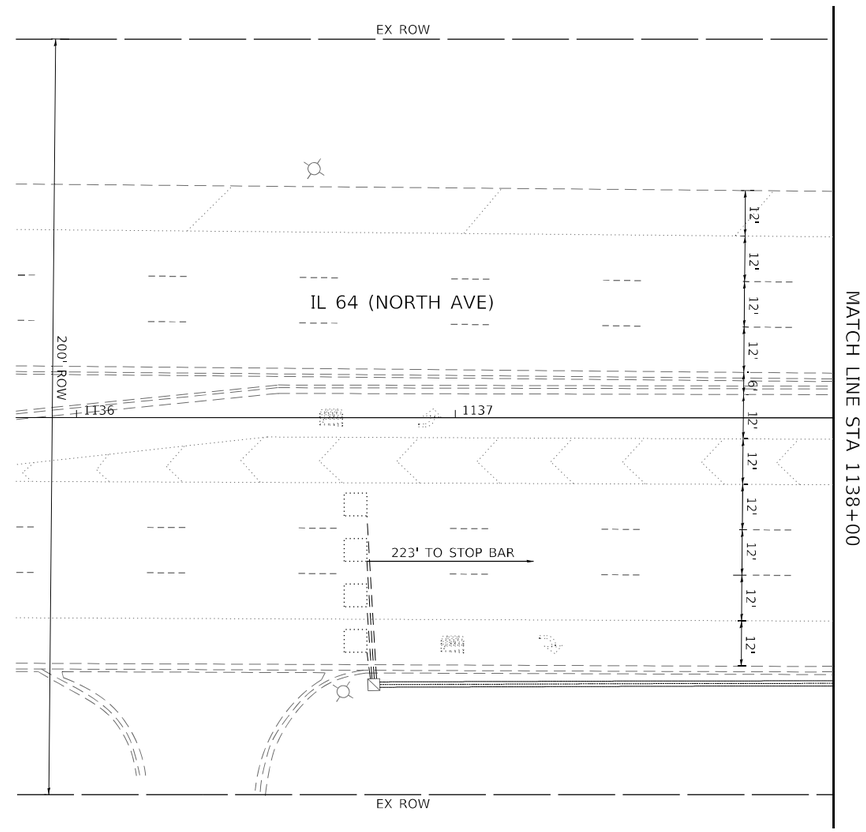

N

0 20 40 60
SCALE IN FEET

TS 12377
IDOT TACTICS
FORMER EAGLE 5A

MODEL: Default
FILE NAME: pw:\\jk-pw.bentley.com:ch-pw-01\Documents\01 Active Projects\MW-CI-S-L689591\00 - IL 64\Phase III\2 Design\CADD\Plan Sheets\Signal\West Corridor Signal\D108121-sht4-s32_KHA.dgn

Kimley»Horn

© 2023 KIMLEY-HORN AND ASSOCIATES, INC.
4201 WINFIELD ROAD, SUITE 600
WARRENVILLE, IL 60555
PHONE: 630-487-5550
WWW.KIMLEY-HORN.COM

USER NAME =	DESIGNED -	REVISED -
	DRAWN -	REVISED -
PLOT SCALE =	CHECKED -	REVISED -
PLOT DATE =	DATE -	REVISED -

STATE OF ILLINOIS
DEPARTMENT OF TRANSPORTATION

TRAFFIC SIGNAL MODERNIZATION PLAN
IL 64 (NORTH AVE) AND TERESA LN/MENARDS ENTR

SCALE: 1" = 20' | SHEET OF SHEETS | STA. TO STA.

F.A.P. RTE.	SECTION	COUNTY	TOTAL SHEETS	SHEET NO.
307	2020-263-SUR,SW&TS	DUPAGE	529	135
		CONTRACT NO. 62N33		
	ILLINOIS	FED. AID PROJECT		

EXISTING AND PROPOSED CONTROLLER SEQUENCE

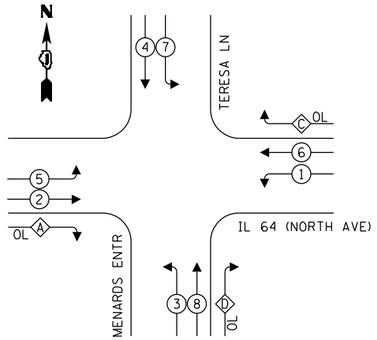

LEGEND:

- PROTECTED PHASE
- PROTECTED/PERMITTED PHASE
- PEDESTRIAN PHASE
- OVERLAP

OVERLAP LETTER		PERMISSIVE PHASE		PROTECTED PHASE
A	=	2	+	3
C	=	6	+	7
D	=	8	+	1

EXISTING AND PROPOSED EMERGENCY VEHICLE PREEMPTION SEQUENCE

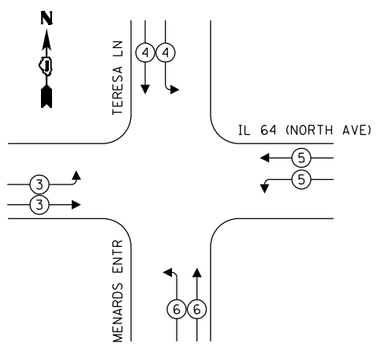

TRAFFIC SIGNAL ELECTRICAL SERVICE REQUIREMENTS

TYPE		QUANTITY	UNIT WATTAGE	TOTAL WATTAGE
SIGNAL HEAD	1 OR 3-SECTION	16	11	176
	4-SECTION	-	14	-
	5-SECTION	6	13	78
PROGRAMMABLE	3-SECTION	-	22	-
	4-SECTION	-	32	-
	5-SECTION	-	28	-
PEDESTRIAN SIGNAL		-	15	-
CONTROLLER		1	150	150
MASTER CONTROLLER		-	100	-
UPS		1	25	25
DETECTION	VIDEO	2	20	40
BLANK-OUT SIGN		-	25	-
NETWORK SWITCH	LAYER II OR III	1	35	35
CELLULAR MODEM		-	15	-
	TOTAL UPS SIZING			504
UPS CHARGING		1	225	225
BATTERY HEATER MAT		1	180	180
CABINET HEATER		1	200	200
FLASHER		-	15	-
LED STREET NAME SIGN		-	120	-
LUMINAIRE		-	240	-
	TOTAL SERVICE WIRE SIZING			1109

ENERGY COSTS TO:
CITY OF WEST CHICAGO
475 MAIN ST
WEST CHICAGO, IL 60185

ENERGY SUPPLY: COMPANY: COMED
PHONE: (866) 639-3532
ACCOUNT NUMBER: 73470-49055

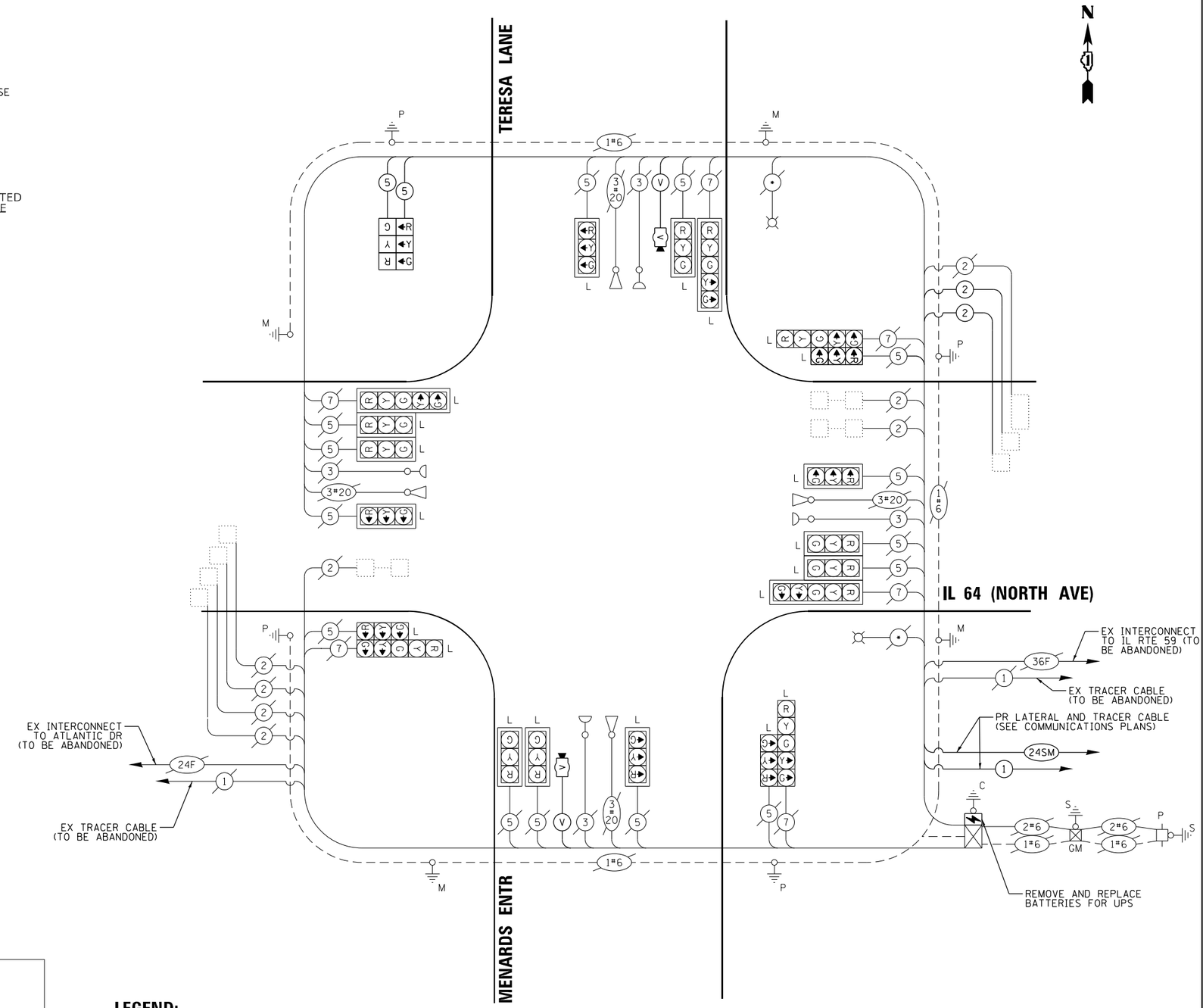

LEGEND:

L = LED LAMP MODULE REPLACEMENT
* = ROADWAY LIGHTING CABLE

CABLE PLAN

(NOT TO SCALE)

TS 12377
IDOT TACTICS
FORMER EAGLE 5A

Kimley»Horn
© 2023 KIMLEY-HORN AND ASSOCIATES, INC.
4201 WINFIELD ROAD, SUITE 600
WARRENVILLE, IL 60555
PHONE: 630-487-5550
WWW.KIMLEY-HORN.COM

USER NAME =	DESIGNED -	REVISED -	
	DRAWN -	REVISED -	
PLOT SCALE =	CHECKED -	REVISED -	
PLOT DATE =	DATE -	REVISED -	

STATE OF ILLINOIS
DEPARTMENT OF TRANSPORTATION

CABLE PLAN, PHASE DESIGNATION DIAGRAM, AND EMERGENCY VEHICLE PREEMPTION SEQUENCE
IL 64 (NORTH AVE) AND TERESA LN/MENARDS ENTR

SCALE: N.T.S. | SHEET OF SHEETS | STA. TO STA.

F.A.P. RTE.	SECTION	COUNTY	TOTAL SHEETS	SHEET NO.
307	2020-263-SUR,SW&TS	DUPAGE	529	136
		CONTRACT NO. 62N33		
		ILLINOIS	FED. AID PROJECT	

MODEL: Default
FILE NAME: pw:\\ih-pw.kimley.com:ih-pw-01\Documents\01 Active Projects\HW-CHS-168959100 - IL 64\Phase II\2 Design\CAD\Plan Sheets\Signal\West Corridor Signal\D108121-sht4-s33_KHA.dgn

SCHEDULE OF QUANTITIES

ITEM DESCRIPTION	UNIT	QUANTITY
MAINTENANCE OF EXISTING TRAFFIC SIGNAL INSTALLATION	EACH	1
ELECTRIC CABLE IN CONDUIT, SIGNAL NO. 14 5C	FOOT	730
ELECTRIC CABLE IN CONDUIT, LEAD-IN, NO. 14 1 PAIR	FOOT	1377
TRAFFIC SIGNAL POST, GALVANIZED STEEL 16 FT.	EACH	1
SIGNAL HEAD, LED, 1-FACE, 3-SECTION, BRACKET MOUNTED	EACH	2
INDUCTIVE LOOP DETECTOR	EACH	2
REMOVE ELECTRIC CABLE FROM CONDUIT	FOOT	730
REMOVE EXISTING TRAFFIC SIGNAL EQUIPMENT	EACH	1
LED LAMP MODULE REPLACEMENT	EACH	72
LAYER II (DATALINK) SWITCH	EACH	1
TERMINATE FIBER IN CABINET	EACH	12
UPGRADE EXISTING CONTROLLER TO NTCIP SPECIAL	EACH	1
TACTICS LICENSE EXPANSION	EACH	1
REMOVE AND REPLACE BATTERIES FOR UNINTERUPTABLE POWER SUPPLY, EXTENDED	EACH	1
FIBER OPTIC INTERCONNECT CENTER, 48 PORT	EACH	1
LED SIGNAL FACE, LENS COVER	EACH	22
VIDEO VEHICLE DETECTION SYSTEM, SINGLE APPROACH	EACH	2

TS 12377
IDOT TACTICS
FORMER EAGLE 5A

MODEL: Default
FILE NAME: pw:\\h-pw.bentley.com:h-pw-01\Documents\01 Active Projects\MW-Cr-S-16995100 - IL 64\Phase III\2 Design\CAD\Plan Sheets\Signal\NWest Corridor Signal\01082124-int-ts-34_KHA.dgn

Kimley»Horn
© 2023 KIMLEY-HORN AND ASSOCIATES, INC.
4201 WINFIELD ROAD, SUITE 603
WARRENVILLE, IL 60555
PHONE: 630-487-5550
WWW.KIMLEY-HORN.COM

USER NAME =	DESIGNED -	REVISED -	
	DRAWN -	REVISED -	
PLOT SCALE =	CHECKED -	REVISED -	
PLOT DATE =	DATE -	REVISED -	

STATE OF ILLINOIS
DEPARTMENT OF TRANSPORTATION

SCHEDULE OF QUANTITIES
IL 64 (NORTH AVE) AND TERESA LN/MENARDS ENTR

SCALE: N.T.S. | SHEET OF SHEETS | STA. TO STA.

F.A.P. RTE.	SECTION	COUNTY	TOTAL SHEETS	SHEET NO.
307	2020-263-SUR,SW&TS	DUPAGE	529	137
		CONTRACT NO. 62N33		
	ILLINOIS	FED. AID PROJECT		

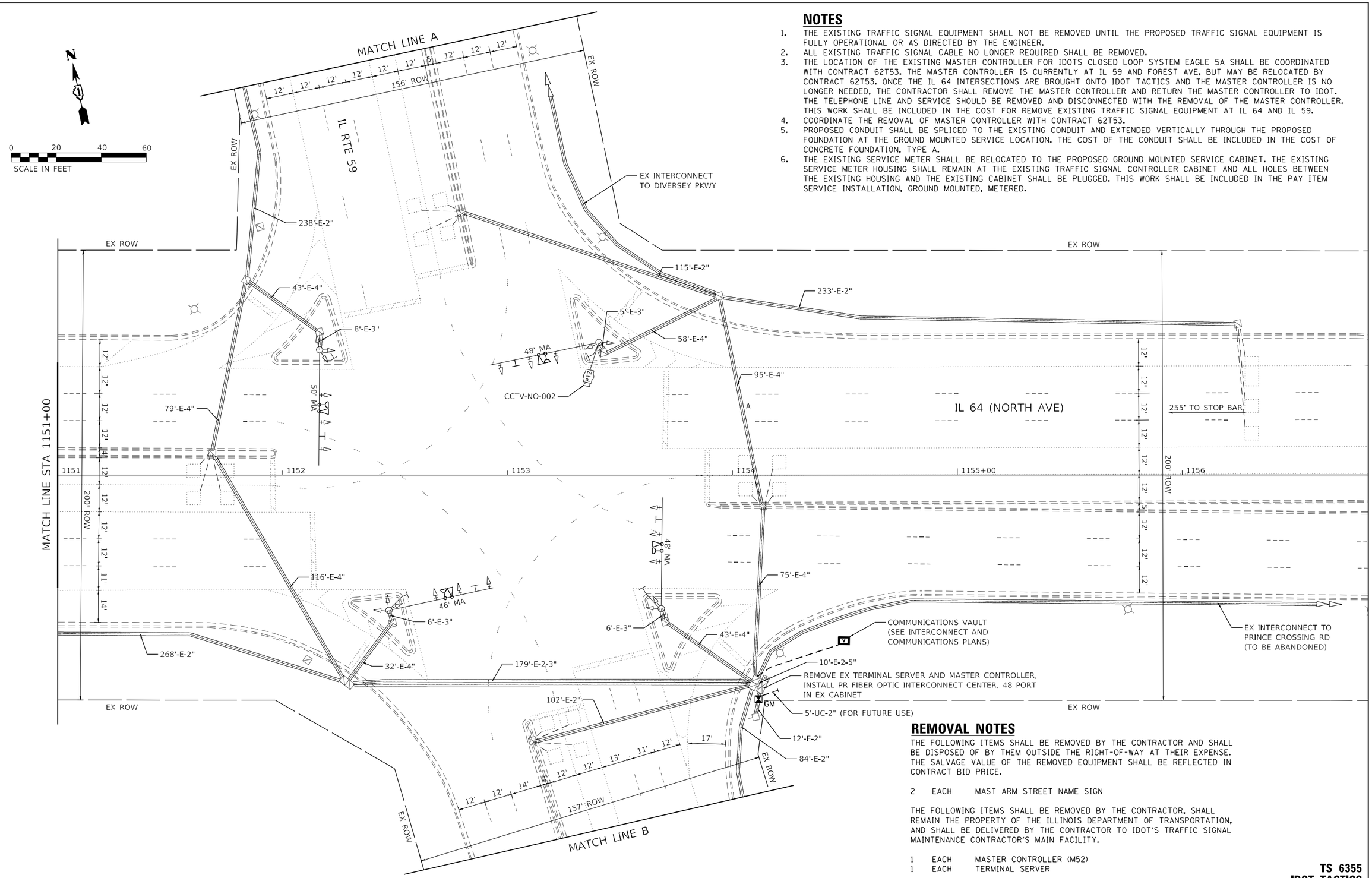

NOTES

1. THE EXISTING TRAFFIC SIGNAL EQUIPMENT SHALL NOT BE REMOVED UNTIL THE PROPOSED TRAFFIC SIGNAL EQUIPMENT IS FULLY OPERATIONAL OR AS DIRECTED BY THE ENGINEER.
2. ALL EXISTING TRAFFIC SIGNAL CABLE NO LONGER REQUIRED SHALL BE REMOVED.
3. THE LOCATION OF THE EXISTING MASTER CONTROLLER FOR IDOTS CLOSED LOOP SYSTEM EAGLE 5A SHALL BE COORDINATED WITH CONTRACT 62T53. THE MASTER CONTROLLER IS CURRENTLY AT IL 59 AND FOREST AVE, BUT MAY BE RELOCATED BY CONTRACT 62T53. ONCE THE IL 64 INTERSECTIONS ARE BROUGHT ONTO IDOT TACTICS AND THE MASTER CONTROLLER IS NO LONGER NEEDED, THE CONTRACTOR SHALL REMOVE THE MASTER CONTROLLER AND RETURN THE MASTER CONTROLLER TO IDOT. THE TELEPHONE LINE AND SERVICE SHOULD BE REMOVED AND DISCONNECTED WITH THE REMOVAL OF THE MASTER CONTROLLER. THIS WORK SHALL BE INCLUDED IN THE COST FOR REMOVE EXISTING TRAFFIC SIGNAL EQUIPMENT AT IL 64 AND IL 59.
4. COORDINATE THE REMOVAL OF MASTER CONTROLLER WITH CONTRACT 62T53.
5. PROPOSED CONDUIT SHALL BE SPLICED TO THE EXISTING CONDUIT AND EXTENDED VERTICALLY THROUGH THE PROPOSED FOUNDATION AT THE GROUND MOUNTED SERVICE LOCATION. THE COST OF THE CONDUIT SHALL BE INCLUDED IN THE COST OF CONCRETE FOUNDATION, TYPE A.
6. THE EXISTING SERVICE METER SHALL BE RELOCATED TO THE PROPOSED GROUND MOUNTED SERVICE CABINET. THE EXISTING SERVICE METER HOUSING SHALL REMAIN AT THE EXISTING TRAFFIC SIGNAL CONTROLLER CABINET AND ALL HOLES BETWEEN THE EXISTING HOUSING AND THE EXISTING CABINET SHALL BE PLUGGED. THIS WORK SHALL BE INCLUDED IN THE PAY ITEM SERVICE INSTALLATION, GROUND MOUNTED, METERED.

REMOVAL NOTES

THE FOLLOWING ITEMS SHALL BE REMOVED BY THE CONTRACTOR AND SHALL BE DISPOSED OF BY THEM OUTSIDE THE RIGHT-OF-WAY AT THEIR EXPENSE. THE SALVAGE VALUE OF THE REMOVED EQUIPMENT SHALL BE REFLECTED IN CONTRACT BID PRICE.

2 EACH MAST ARM STREET NAME SIGN

THE FOLLOWING ITEMS SHALL BE REMOVED BY THE CONTRACTOR, SHALL REMAIN THE PROPERTY OF THE ILLINOIS DEPARTMENT OF TRANSPORTATION, AND SHALL BE DELIVERED BY THE CONTRACTOR TO IDOT'S TRAFFIC SIGNAL MAINTENANCE CONTRACTOR'S MAIN FACILITY.

1 EACH MASTER CONTROLLER (M52)
1 EACH TERMINAL SERVER

TS 6355
IDOT TACTICS
FORMER EAGLE 5A

MODEL: Default
FILE NAME: pw:\\lh-pw.bentley.com:lh-pw-01\Documents\01 Active Projects\MW-Cr-S-168959100 - IL 64\Phase III\2 Design\CADd\Plan Sheets\Signal\West Corridor Signal\0108121-sht4-35 KHA.dgn

Kimley»Horn
© 2022 KIMLEY-HORN AND ASSOCIATES, INC.
4201 WINFIELD ROAD, SUITE 600
WARRENVILLE, IL 60555
PHONE: 630-487-5550
WWW.KIMLEY-HORN.COM

USER NAME =	DESIGNED -	REVISED -
	DRAWN -	REVISED -
PLOT SCALE =	CHECKED -	REVISED -
PLOT DATE =	DATE -	REVISED -

STATE OF ILLINOIS
DEPARTMENT OF TRANSPORTATION

TRAFFIC SIGNAL MODIFICATION PLAN (SHEET 1 OF 2)
IL 64 (NORTH AVE) AND IL RTE 59

SCALE: 1" = 20' | SHEET OF SHEETS | STA. TO STA.

F.A.P. RTE.	SECTION	COUNTY	TOTAL SHEETS	SHEET NO.
307	2020-263-SUR,SW&TS	DUPAGE	529	138
		CONTRACT NO. 62N33		
	ILLINOIS	FED. AID PROJECT		

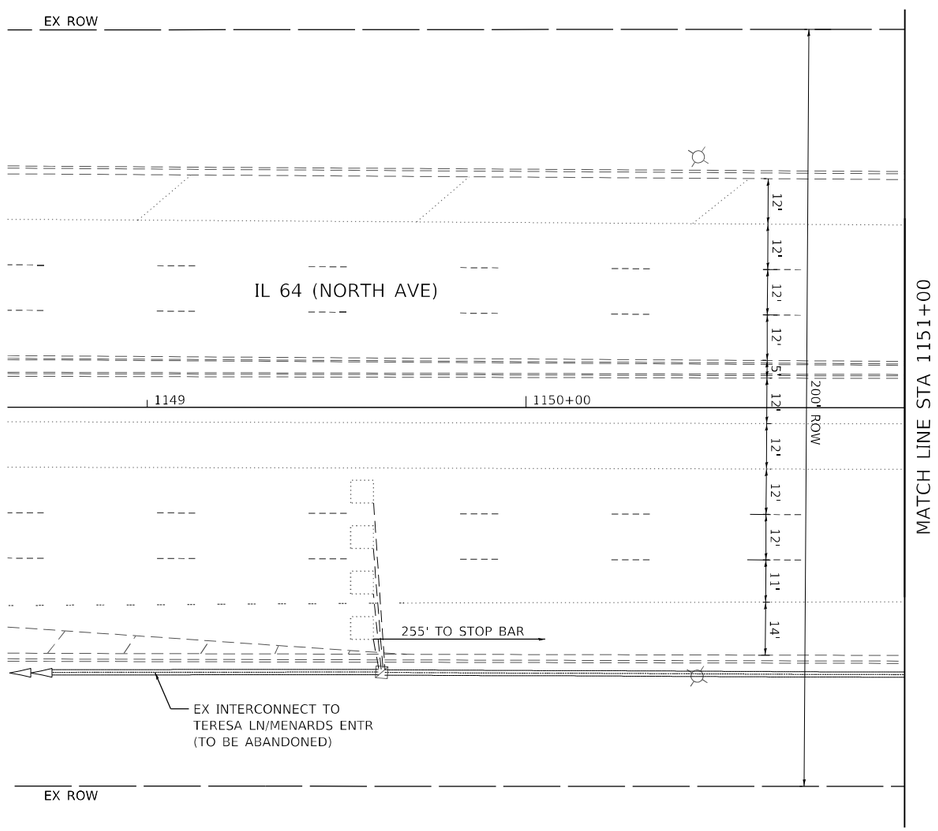

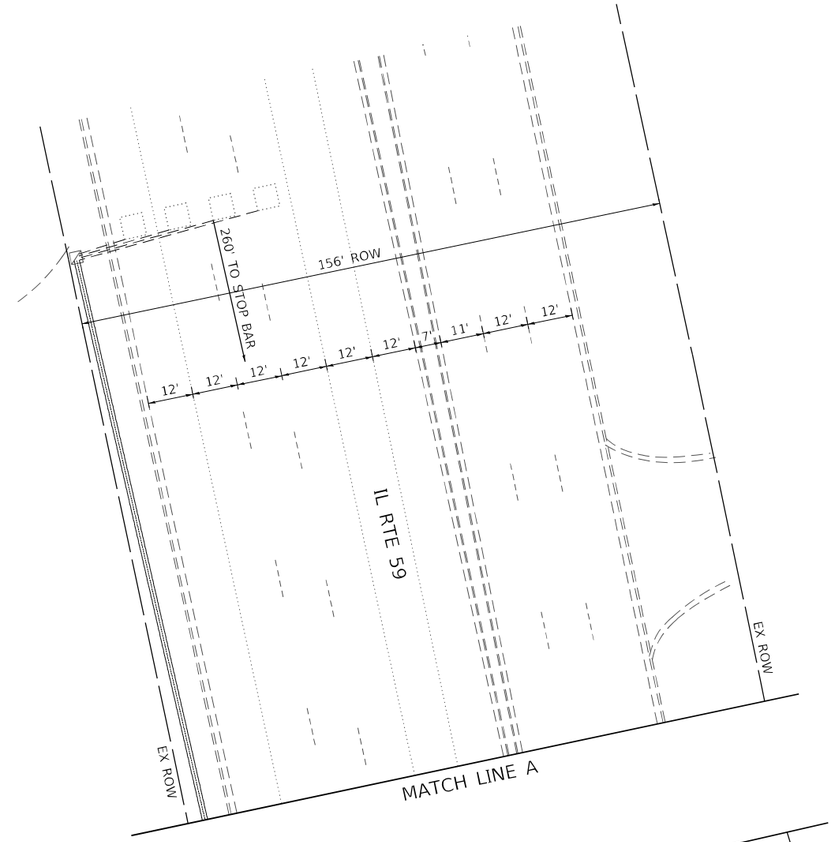

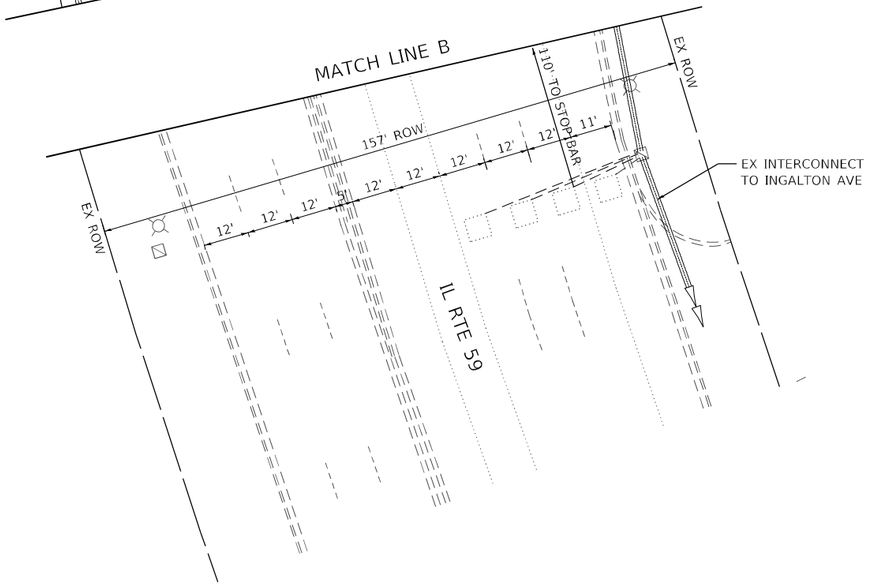

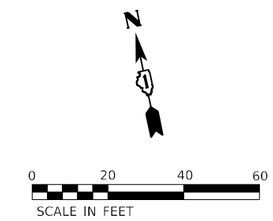

TS 6355
IDOT TACTICS
FORMER EAGLE 5A

MODEL: Default
FILE NAME: pw:\\ih-pw.kimley.com:ih-pw-01\Documents\01 Active Projects\HW-Ch5-168959100 - IL 64\Phase II\2 Design\CAD\Plan Sheets\Signal\West Corridor Signal\D108121-sht4-s36_KHA.dgn

Kimley»Horn
© 2022 KIMLEY-HORN AND ASSOCIATES, INC.
4201 WINFIELD ROAD, SUITE 600
WARRENVILLE, IL 60555
PHONE: 630-487-5550
WWW.KIMLEY-HORN.COM

USER NAME =	DESIGNED -	REVISED -
	DRAWN -	REVISED -
PLOT SCALE =	CHECKED -	REVISED -
PLOT DATE =	DATE -	REVISED -

STATE OF ILLINOIS
DEPARTMENT OF TRANSPORTATION

TRAFFIC SIGNAL MODIFICATION PLAN (SHEET 2 OF 2)
IL 64 (NORTH AVE) AND IL RTE 59

SCALE: 1" = 20' | SHEET OF SHEETS | STA. TO STA.

F.A.P. RTE.	SECTION	COUNTY	TOTAL SHEETS	SHEET NO.
307	2020-263-SUR,SW&TS	DUPAGE	529	139
		CONTRACT NO. 62N33		
		ILLINOIS	FED. AID PROJECT	

EXISTING AND PROPOSED CONTROLLER SEQUENCE

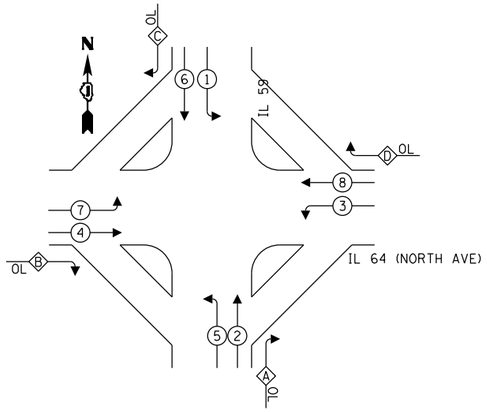

EXISTING AND PROPOSED EMERGENCY VEHICLE PREEMPTION SEQUENCE

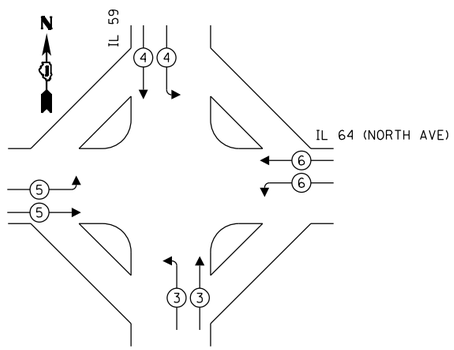

LEGEND:

- PROTECTED PHASE
- PROTECTED/PERMITTED PHASE
- PEDESTRIAN PHASE
- OVERLAP

OVERLAP LETTER		PERMISSIVE PHASE		PROTECTED PHASE
A	=	2	+	3
B	=	4	+	5
C	=	6	+	7
D	=	8	+	1

TRAFFIC SIGNAL ELECTRICAL SERVICE REQUIREMENTS

TYPE		QUANTITY	UNIT WATTAGE	TOTAL WATTAGE
SIGNAL HEAD	1 OR 3-SECTION	16	11	176
	4-SECTION	-	14	-
	5-SECTION	8	13	104
PROGRAMMABLE	3-SECTION	-	22	-
	4-SECTION	-	32	-
	5-SECTION	-	28	-
PEDESTRIAN SIGNAL		-	15	-
CONTROLLER		1	150	150
MASTER CONTROLLER		-	100	-
UPS		1	25	25
DETECTION	RADAR OR VIDEO	-	20	-
BLANK-OUT SIGN		-	25	-
NETWORK SWITCH	II OR III	1	35	35
CELLULAR MODEM		-	15	-
PTZ		1	75	75
		TOTAL UPS SIZING		565
UPS CHARGING		1	225	225
BATTERY HEATER MAT		1	180	180
CABINET HEATER		1	200	200
FLASHER		-	15	-
LED STREET NAME SIGN		-	120	-
LUMINAIRE		-	240	-
		TOTAL SERVICE WIRE SIZING		1170

ENERGY COSTS TO:
ILLINOIS DEPARTMENT OF TRANSPORTATION
201 W CENTER CT
SCHAUMBURG, IL 60196

ENERGY SUPPLY:
CONTACT: ANTONIO RIOS
COMPANY: COMED
PHONE: (630) 696-6855
ACCOUNT NUMBER: 05631-53211

LEGEND:

L = LED LAMP MODULE REPLACEMENT

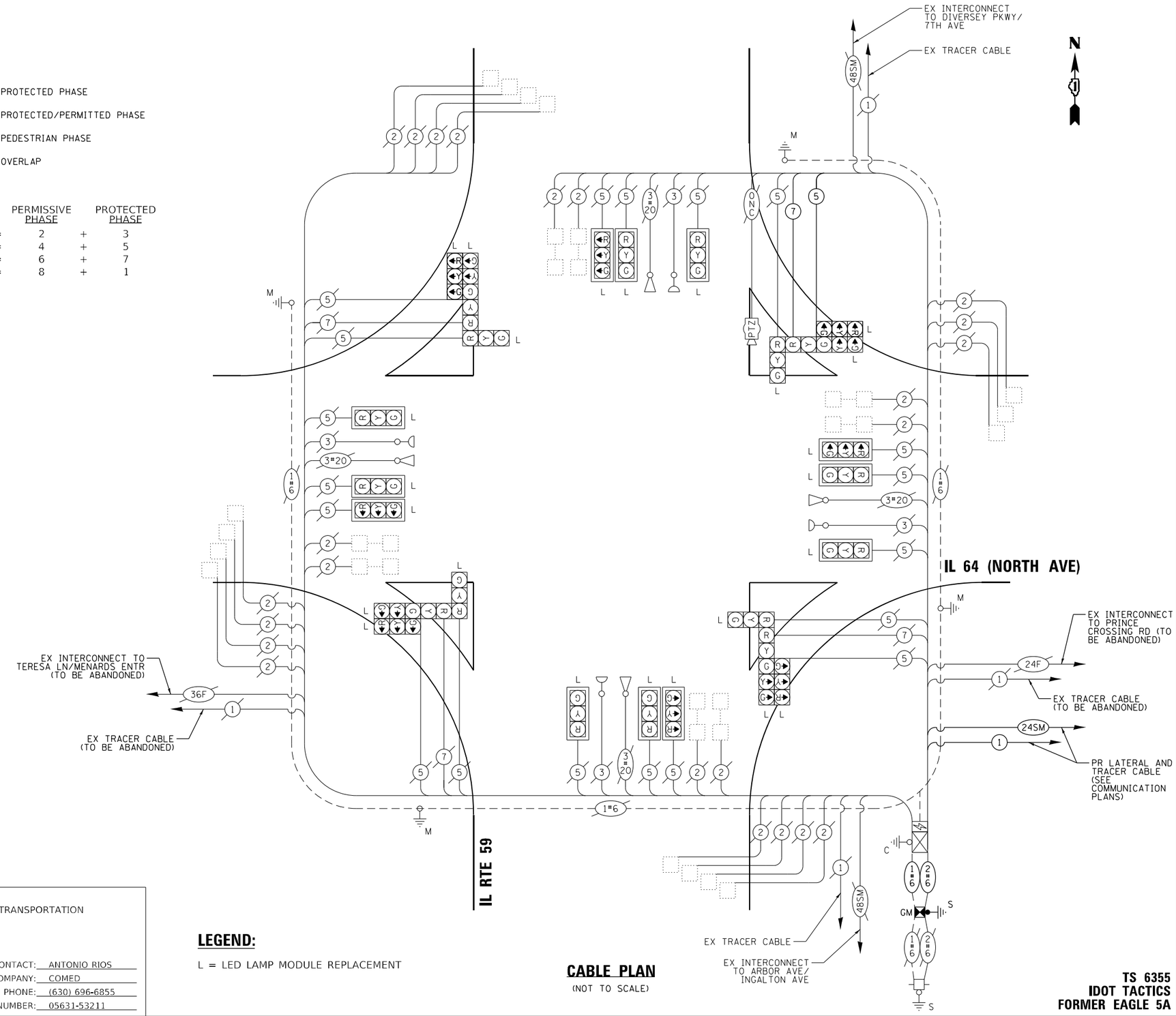

CABLE PLAN

(NOT TO SCALE)

TS 6355
IDOT TACTICS
FORMER EAGLE 5A

Kimley»Horn
© 2022 KIMLEY-HORN AND ASSOCIATES, INC.
4201 WINFIELD ROAD, SUITE 600
WARRENVILLE, IL 60555
PHONE: 630-487-5550
WWW.KIMLEY-HORN.COM

USER NAME =	DESIGNED -	REVISED -
	DRAWN -	REVISED -
PLOT SCALE =	CHECKED -	REVISED -
PLOT DATE =	DATE -	REVISED -

STATE OF ILLINOIS
DEPARTMENT OF TRANSPORTATION

CABLE PLAN, PHASE DESIGNATION DIAGRAM AND EMERGENCY VEHICLE PREEMPTION SEQUENCE
IL 64 (NORTH AVE) AND IL RTE 59

SCALE: N.T.S. | SHEET OF SHEETS | STA. TO STA.

F.A.P. RTE.	SECTION	COUNTY	TOTAL SHEETS	SHEET NO.
307	2020-263-SUR,SW&TS	DUPAGE	529	140
		CONTRACT NO. 62N33		
		ILLINOIS	FED. AID PROJECT	

MODEL: Default
FILE NAME: pw:\\uh-pw.bentley.com:uh-pwc01\Documents\01 Active Projects\NW-CHS-168959100 - IL 64\Phase III\2 Design\CAD\Plan Sheets\Signal\West Corridor Signal\10108121-sht14-39_KHA.dgn

SIGN PANEL – TYPE 2

ALL DIMENSIONS ARE IN INCHES UNLESS OTHERWISE NOTED

DESIGN SERIES	AREA (SQ FT)	SIGN PANEL TYPE	SHEETING TYPE	QTY. REQUIRED
D	12.5	2	ZZ	2

SCHEDULE OF QUANTITIES

ITEM DESCRIPTION	UNIT	QUANTITY
SIGN PANEL - TYPE 2	SQ FT	25
UNDERGROUND CONDUIT, GALVANIZED STEEL, 2" DIA.	FOOT	5
MAINTENANCE OF EXISTING TRAFFIC SIGNAL INSTALLATION	EACH	1
ELECTRIC CABLE IN CONDUIT, SERVICE, NO. 6 2 C	FOOT	40
ELECTRIC CABLE IN CONDUIT, EQUIPMENT GROUNDING CONDUCTOR, NO. 6 1C	FOOT	40
CONCRETE FOUNDATION, TYPE A	FOOT	4
REMOVE EXISTING TRAFFIC SIGNAL EQUIPMENT	EACH	1
LED LAMP MODULE REPLACEMENT	EACH	80
SERVICE INSTALLATION, GROUND MOUNTED, METERED	EACH	1
LAYER II (DATALINK) SWITCH	EACH	1
TERMINATE FIBER IN CABINET	EACH	12
UPGRADE EXISTING CONTROLLER TO NTCIP SPECIAL	EACH	1
FIBER OPTIC INTERCONNECT CENTER, 48 PORT	EACH	1
LED SIGNAL FACE, LENS COVER	EACH	24

TS 6355
IDOT TACTICS
FORMER EAGLE 5A

MODEL: Default
FILE NAME: pw:\\h-pw.bentley.com:h-pw-01\Documents01 Active Projects\NW-Cr-S-168959100 - IL 64\Phase II\2 Design\CADD\Bar Sheets\Signal\NWest Corridor Signal\08121-sht-ts-40_KHA.dgn

Kimley»Horn
© 2023 KIMLEY-HORN AND ASSOCIATES, INC.
4001 WINFIELD ROAD, SUITE 603
WARRENVILLE, IL 60555
PHONE: 630-487-5550
WWW.KIMLEY-HORN.COM

USER NAME =	DESIGNED -	REVISED -
	DRAWN -	REVISED -
PLOT SCALE =	CHECKED -	REVISED -
PLOT DATE =	DATE -	REVISED -

STATE OF ILLINOIS
DEPARTMENT OF TRANSPORTATION

SCHEDULE OF QUANTITIES
IL 64 (NORTH AVE) AND IL RTE 59

SCALE: N.T.S. | SHEET OF SHEETS | STA. TO STA.

F.A.P. RTE.	SECTION	COUNTY	TOTAL SHEETS	SHEET NO.
307	2020-263-SUR,SW&TS	DUPAGE	529	141

CONTRACT NO. 62N33

ILLINOIS | FED. AID PROJECT

NOTES

1. THE EXISTING TRAFFIC SIGNAL EQUIPMENT SHALL NOT BE REMOVED UNTIL THE PROPOSED TRAFFIC SIGNAL EQUIPMENT IS FULLY OPERATIONAL OR AS DIRECTED BY THE ENGINEER.
2. ALL EXISTING TRAFFIC SIGNAL CABLE NO LONGER REQUIRED SHALL BE REMOVED.

REMOVAL NOTES

THE FOLLOWING ITEMS SHALL BE REMOVED BY THE CONTRACTOR AND SHALL BE DISPOSED OF BY THEM OUTSIDE THE RIGHT-OF-WAY AT THEIR EXPENSE. THE SALVAGE VALUE OF THE REMOVED EQUIPMENT SHALL BE REFLECTED IN CONTRACT BID PRICE.

16	EACH	3-SECTION SIGNAL HEAD
4	EACH	5-SECTION SIGNAL HEAD
10	EACH	TRAFFIC SIGNAL BACKPLATES
2	EACH	MAST ARM AND ASSEMBLY AND POLE
4	EACH	TRAFFIC SIGNAL POST
3	EACH	STREET NAME SIGN PANEL
1	EACH	CONTROLLER (M41)

THE FOLLOWING ITEMS SHALL BE REMOVED BY THE CONTRACTOR, SHALL REMAIN THE PROPERTY OF THE ILLINOIS DEPARTMENT OF TRANSPORTATION, AND SHALL BE DELIVERED BY THE CONTRACTOR TO IDOT'S TRAFFIC SIGNAL MAINTENANCE CONTRACTOR'S MAIN FACILITY.

1	EACH	VIDEO VEHICLE DETECTION SYSTEM

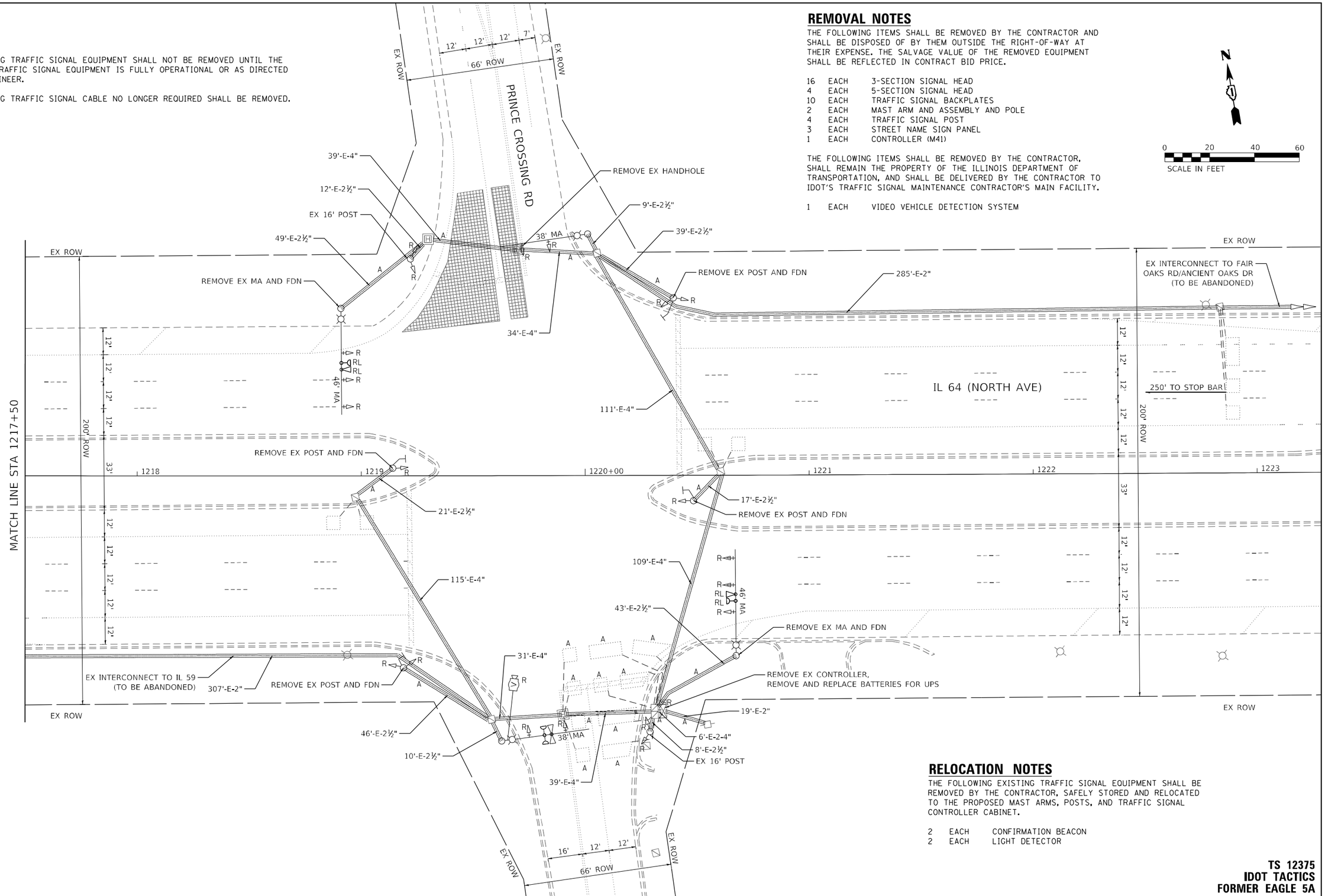

RELOCATION NOTES

THE FOLLOWING EXISTING TRAFFIC SIGNAL EQUIPMENT SHALL BE REMOVED BY THE CONTRACTOR, SAFELY STORED AND RELOCATED TO THE PROPOSED MAST ARMS, POSTS, AND TRAFFIC SIGNAL CONTROLLER CABINET.

2	EACH	CONFIRMATION BEACON
2	EACH	LIGHT DETECTOR

TS 12375
IDOT TACTICS
FORMER EAGLE 5A

MODEL: Default
FILE NAME: pw:\\h-pw.bentley.com:h-pw-01\Documents\01 Active Projects\MW-C-IS-16995100 - IL 64\Phase III\2 Design\CAD\Plan Sheets\Signal\West Corridor Signal\IDOT08121-sht4-1 KHA.dgn

Kimley»Horn
© 2023 KIMLEY-HORN AND ASSOCIATES, INC.
4201 WINFIELD ROAD, SUITE 603
WARRENVILLE, IL 60555
PHONE: 630-487-5550
WWW.KIMLEY-HORN.COM

USER NAME =	DESIGNED -	REVISED -	
	DRAWN -	REVISED -	
PLOT SCALE =	CHECKED -	REVISED -	
PLOT DATE =	DATE -	REVISED -	

STATE OF ILLINOIS
DEPARTMENT OF TRANSPORTATION

TRAFFIC SIGNAL EQUIPMENT REMOVAL PLAN
IL 64 (NORTH AVE) AND PRINCE CROSSING RD

SCALE: 1" = 20' | SHEET OF SHEETS | STA. TO STA.

F.A.P. RTE.	SECTION	COUNTY	TOTAL SHEETS	SHEET NO.
307	2020-263-SUR,SW&TS	DUPAGE	529	142
		CONTRACT NO. 62N33		
	ILLINOIS	FED. AID PROJECT		

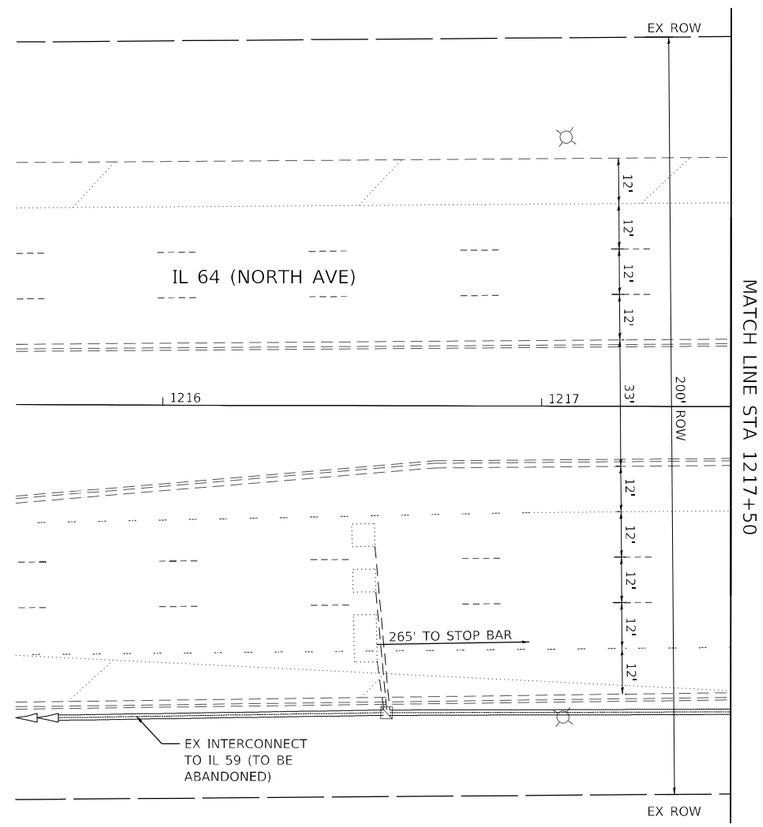

N

0 20 40 60
SCALE IN FEET

TS 12375
IDOT TACTICS
FORMER EAGLE 5A

MODEL: Default
FILE NAME: pw:\\jk-pw.bentley.com:jk-pw-01\Documents\01 Active Projects\HAVC-Ci-S-1689593100 - IL 64\Phase III\2 Design\CADD\Plan Sheets\Signal\NWest Corridor Signal\D1082121-sht4-of2_KHA.dgn

Kimley»Horn
© 2023 KIMLEY-HORN AND ASSOCIATES, INC.
4201 WINFIELD ROAD, SUITE 600
WARRENVILLE, IL 60555
PHONE: 630-487-5550
WWW.KIMLEY-HORN.COM

USER NAME =	DESIGNED -	REVISED -
	DRAWN -	REVISED -
PLOT SCALE =	CHECKED -	REVISED -
PLOT DATE =	DATE -	REVISED -

STATE OF ILLINOIS
DEPARTMENT OF TRANSPORTATION

TRAFFIC SIGNAL EQUIPMENT REMOVAL PLAN
IL 64 (NORTH AVE) AND PRINCE CROSSING RD

SCALE: 1" = 20' | SHEET OF SHEETS | STA. TO STA.

F.A.P. RTE.	SECTION	COUNTY	TOTAL SHEETS	SHEET NO.
307	2020-263-SUR,SW&TS	DUPAGE	529	143
		CONTRACT NO. 62N33		
	ILLINOIS	FED. AID PROJECT		

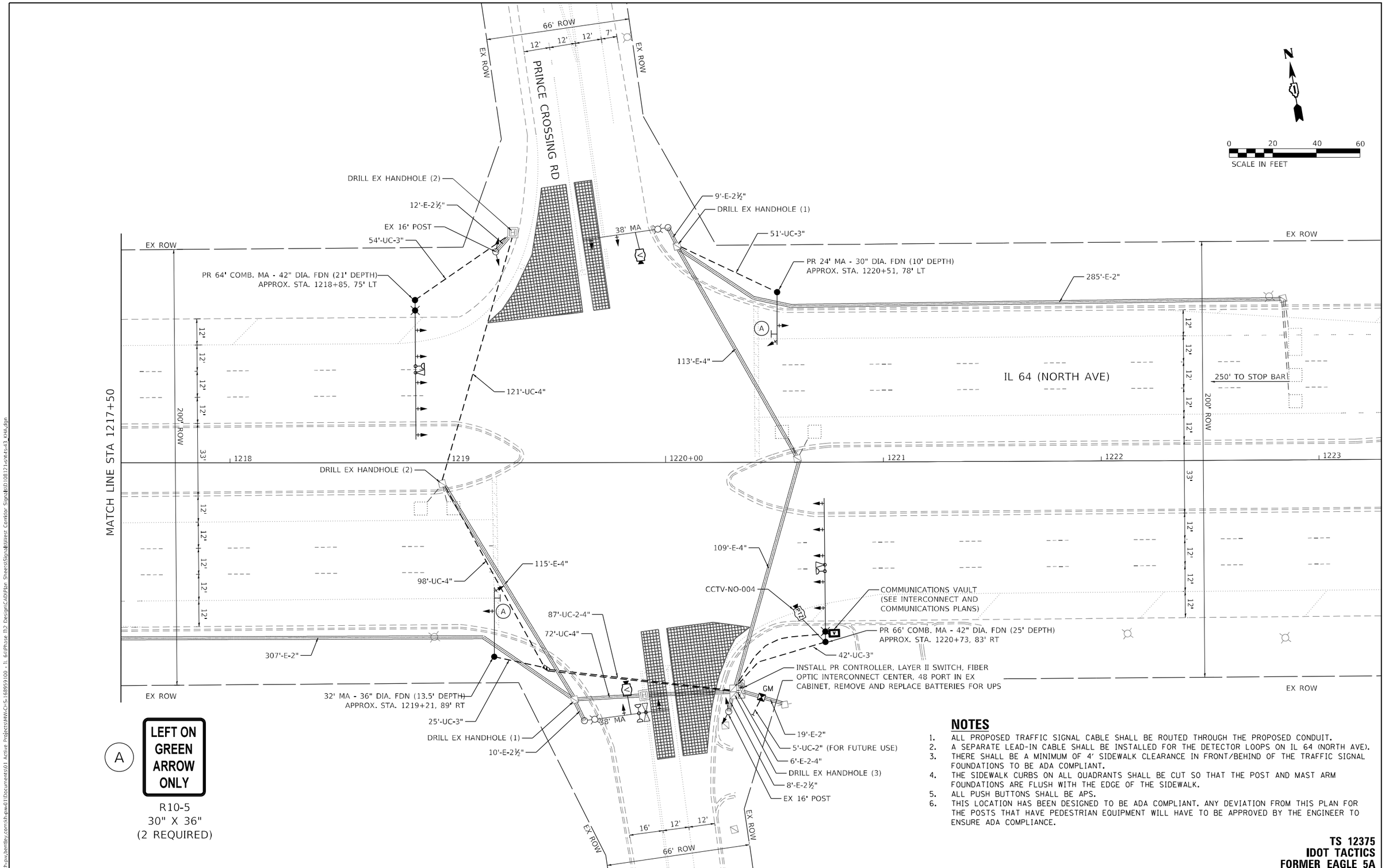

NOTES

1. ALL PROPOSED TRAFFIC SIGNAL CABLE SHALL BE ROUTED THROUGH THE PROPOSED CONDUIT.
2. A SEPARATE LEAD-IN CABLE SHALL BE INSTALLED FOR THE DETECTOR LOOPS ON IL 64 (NORTH AVE).
3. THERE SHALL BE A MINIMUM OF 4' SIDEWALK CLEARANCE IN FRONT/BEHIND OF THE TRAFFIC SIGNAL FOUNDATIONS TO BE ADA COMPLIANT.
4. THE SIDEWALK CURBS ON ALL QUADRANTS SHALL BE CUT SO THAT THE POST AND MAST ARM FOUNDATIONS ARE FLUSH WITH THE EDGE OF THE SIDEWALK.
5. ALL PUSH BUTTONS SHALL BE APS.
6. THIS LOCATION HAS BEEN DESIGNED TO BE ADA COMPLIANT. ANY DEVIATION FROM THIS PLAN FOR THE POSTS THAT HAVE PEDESTRIAN EQUIPMENT WILL HAVE TO BE APPROVED BY THE ENGINEER TO ENSURE ADA COMPLIANCE.

TS 12375
IDOT TACTICS
FORMER EAGLE 5A

MODEL: Default
FILE NAME: pw:\\uh-pw.bentley.com:sh-pw-01\Documents\01 Active Projects\HW-Ch-S-1689591 00 - IL 64\Phase III\2 Design\CAD\Plan Sheets\Signal\West Corridor Signal\D1D1082-cont1-c3 K1A.dgn

Kimley»Horn
© 2022 KIMLEY-HORN AND ASSOCIATES, INC.
4001 WINFIELD ROAD, SUITE 600
WARRENVILLE, IL 60555
PHONE: 630-487-5550
WWW.KIMLEY-HORN.COM

USER NAME =	DESIGNED -	REVISED -	
	DRAWN -	REVISED -	
PLOT SCALE =	CHECKED -	REVISED -	
PLOT DATE =	DATE -	REVISED -	

STATE OF ILLINOIS
DEPARTMENT OF TRANSPORTATION

TRAFFIC SIGNAL MODERNIZATION PLAN
IL 64 (NORTH AVE) AND PRINCE CROSSING RD

SCALE: 1" = 20' | SHEET OF SHEETS | STA. TO STA.

F.A.P. RTE.	SECTION	COUNTY	TOTAL SHEETS	SHEET NO.
307	2020-263-SUR,SW&TS	DUPAGE	529	144
		CONTRACT NO. 62N33		
		ILLINOIS	FED. AID PROJECT	

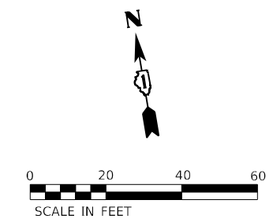

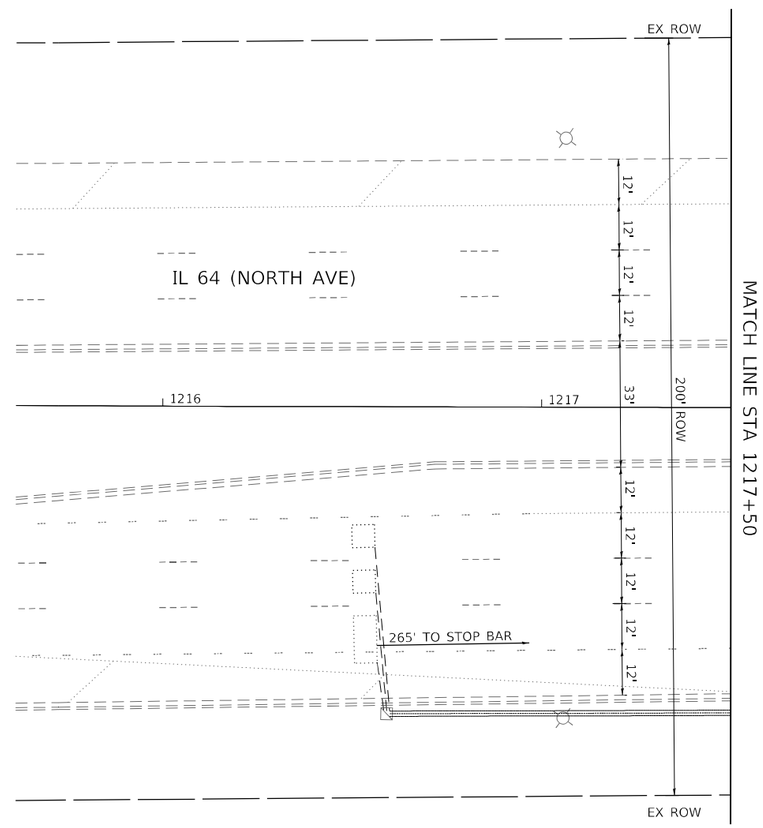

TS 12375
IDOT TACTICS
FORMER EAGLE 5A

MODEL: Default
FILE NAME: pw:\\jk-pw.bentley.com:jk-pw-01\Documents\01 Active Projects\HAWK-Ci-5-1689959100 - IL 64\Phase III\2 Design\CADD\Plan Sheets\Signal\NWest Corridor Signal\D1082125-N14-44_KHA.dgn

Kimley»Horn
© 2023 KIMLEY-HORN AND ASSOCIATES, INC.
4201 WINFIELD ROAD, SUITE 600
WARRENVILLE, IL 60555
PHONE: 630-487-5550
WWW.KIMLEY-HORN.COM

USER NAME =	DESIGNED -	REVISED -
	DRAWN -	REVISED -
PLOT SCALE =	CHECKED -	REVISED -
PLOT DATE =	DATE -	REVISED -

STATE OF ILLINOIS
DEPARTMENT OF TRANSPORTATION

TRAFFIC SIGNAL MODERNIZATION PLAN
IL 64 (NORTH AVE) AND PRINCE CROSSING RD

SCALE: 1" = 20' | SHEET OF SHEETS | STA. TO STA.

F.A.P. RTE.	SECTION	COUNTY	TOTAL SHEETS	SHEET NO.
307	2020-263-SUR,SW&TS	DUPAGE	529	145
		CONTRACT NO. 62N33		
	ILLINOIS	FED. AID PROJECT		

EXISTING CONTROLLER SEQUENCE

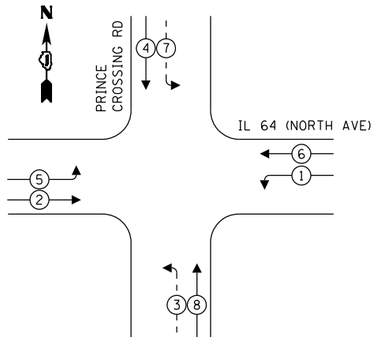

PROPOSED CONTROLLER SEQUENCE

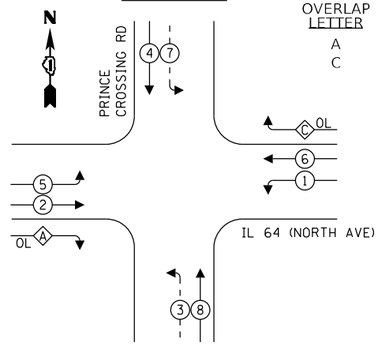

OVERLAP LETTER		PERMISSIVE PHASE		PROTECTED PHASE
A	=	2	+	3
C	=	6	+	7

EXISTING AND PROPOSED EMERGENCY VEHICLE PREEMPTION SEQUENCE

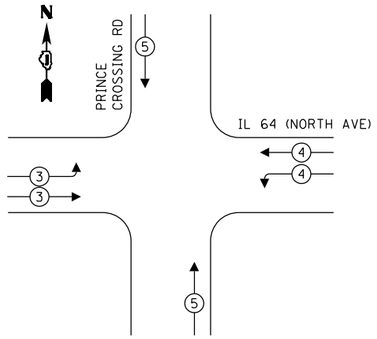

LEGEND:

- PROTECTED PHASE
- PROTECTED/PERMITTED PHASE
- PEDESTRIAN PHASE
- OL — OVERLAP

TRAFFIC SIGNAL ELECTRICAL SERVICE REQUIREMENTS

TYPE		QUANTITY	UNIT WATTAGE	TOTAL WATTAGE
SIGNAL HEAD	1 OR 3-SECTION	14	11	154
	4-SECTION	-	14	-
	5-SECTION	8	13	104
PROGRAMMABLE	3-SECTION	-	22	-
	4-SECTION	-	32	-
	5-SECTION	-	28	-
PEDESTRIAN SIGNAL		-	15	-
CONTROLLER		1	150	150
MASTER CONTROLLER		-	100	-
UPS		1	25	25
DETECTION	VIDEO	2	20	40
BLANK-OUT SIGN		-	25	-
NETWORK SWITCH	LAYER II OR III	1	35	35
CELLULAR MODEM		-	15	-
PTZ		1	75	75
		TOTAL UPS SIZING		583
UPS CHARGING		1	225	225
BATTERY HEATER MAT		1	180	180
CABINET HEATER		1	200	200
FLASHER		-	15	-
LED STREET NAME SIGN		-	120	-
LUMINAIRE		-	240	-
		TOTAL SERVICE WIRE SIZING		1188

NOTES

1. EXISTING CABLE SLACK SHALL BE USED TO INSTALL PROPOSED SIGNAL HEADS AND EVP DETECTOR AT THEIR NEW LOCATION ALONG THE EXISTING MAST ARM.

ENERGY COSTS TO:
ILLINOIS DEPARTMENT OF TRANSPORTATION
201 W CENTER CT
SCHAUMBURG, IL 60196

ENERGY SUPPLY: COMPANY: COMED
PHONE: (866) 639-3532
ACCOUNT NUMBER: 73470-49055

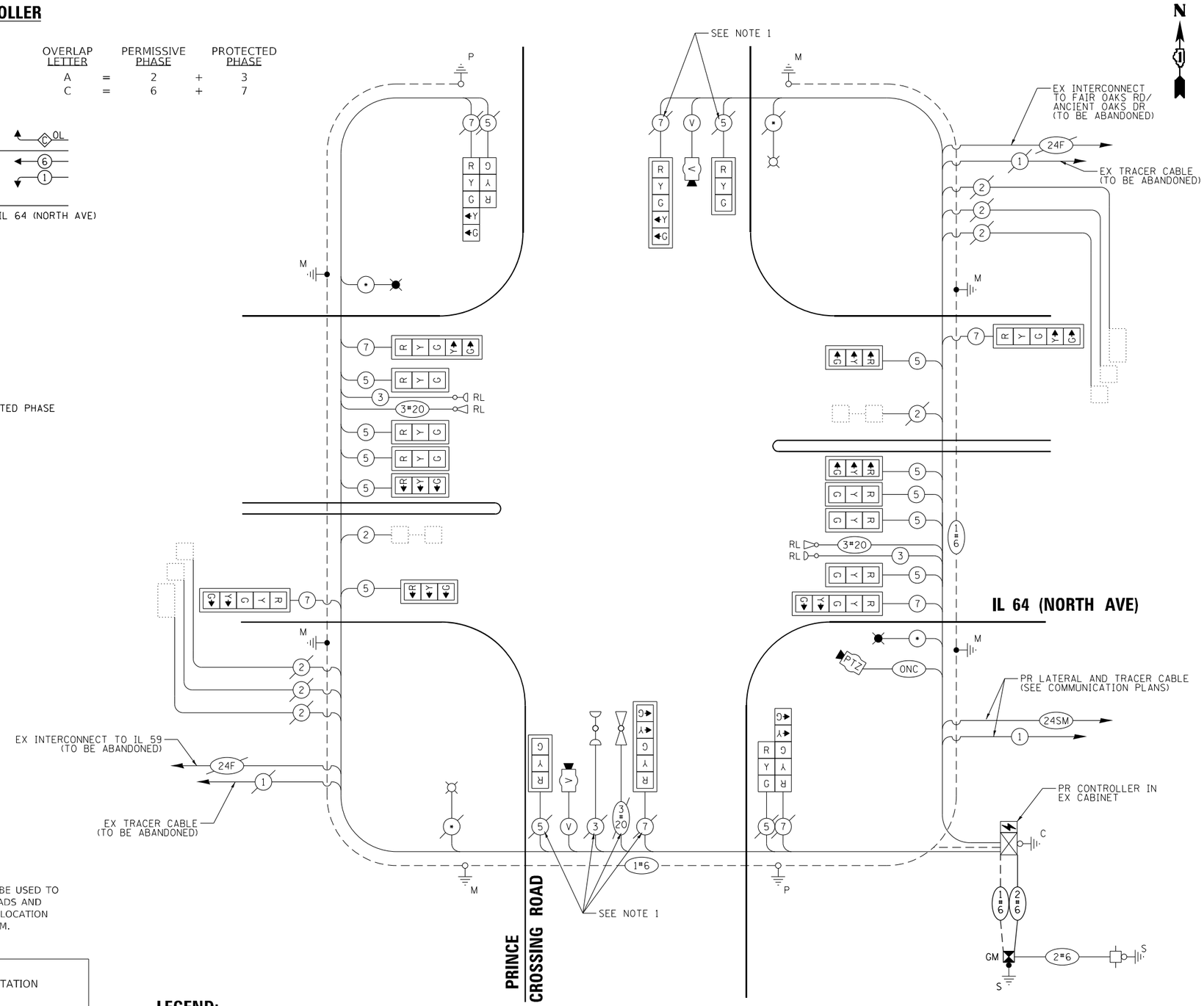

LEGEND:

* = ROADWAY LIGHTING CABLE

CABLE PLAN

(NOT TO SCALE)

TS 12375
IDOT TACTICS
FORMER EAGLE 5A

MODEL: Default
FILE NAME: pw:\\k-pw.bentley.com:k-pwc01\Documents\01 Active Projects\NW-CHS-168959100 - IL 64\Phase III\2 Design\CAD\Plan Sheets\Signal\West Corridor Signal\1010812-int14-45_KHA.dgn

Kimley»Horn
© 2022 KIMLEY-HORN AND ASSOCIATES, INC.
4201 WINFIELD ROAD, SUITE 600
WARRENVILLE, IL 60555
PHONE: 630-487-5550
WWW.KIMLEY-HORN.COM

USER NAME =	DESIGNED -	REVISED -
	DRAWN -	REVISED -
PLOT SCALE =	CHECKED -	REVISED -
PLOT DATE =	DATE -	REVISED -

STATE OF ILLINOIS
DEPARTMENT OF TRANSPORTATION

CABLE PLAN, PHASE DESIGNATION DIAGRAM, AND EMERGENCY VEHICLE PREEMPTION SEQUENCE
IL 64 (NORTH AVE) AND PRINCE CROSSING RD

SCALE: N.T.S. | SHEET OF SHEETS | STA. TO STA.

F.A.P. RTE.	SECTION	COUNTY	TOTAL SHEETS	SHEET NO.
307	2020-263-SUR,SW&TS	DUPAGE	529	146
		CONTRACT NO. 62N33		
	ILLINOIS	FED. AID PROJECT		

SIGN PANEL – TYPE 2

ALL DIMENSIONS ARE IN INCHES UNLESS OTHERWISE NOTED

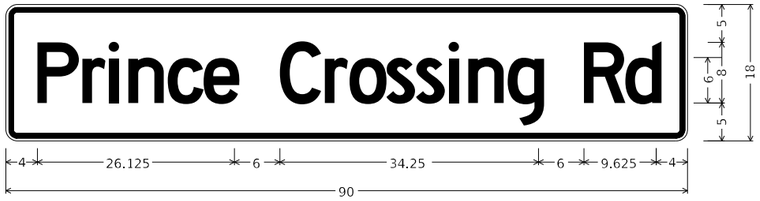

DESIGN SERIES	AREA (SQ FT)	SIGN PANEL TYPE	SHEETING TYPE	QTY. REQUIRED
C	11.25	2	ZZ	2

DESIGN SERIES	AREA (SQ FT)	SIGN PANEL TYPE	SHEETING TYPE	QTY. REQUIRED
D	12.5	2	ZZ	2

SCHEDULE OF QUANTITIES

	ITEM DESCRIPTION	UNIT	QUANTITY
	SIGN PANEL - TYPE 2	SQ FT	47.5
	UNDERGROUND CONDUIT, GALVANIZED STEEL, 2" DIA.	FOOT	5
	UNDERGROUND CONDUIT, GALVANIZED STEEL, 3" DIA.	FOOT	172
	UNDERGROUND CONDUIT, GALVANIZED STEEL, 4" DIA.	FOOT	410
	DOUBLE HANDHOLE	EACH	1
	MAINTENANCE OF EXISTING TRAFFIC SIGNAL INSTALLATION	EACH	1
	ELECTRIC CABLE IN CONDUIT, SIGNAL NO. 14 3C	FOOT	661
	ELECTRIC CABLE IN CONDUIT, SIGNAL NO. 14 5C	FOOT	3215
	ELECTRIC CABLE IN CONDUIT, SIGNAL NO. 14 7C	FOOT	1232
	ELECTRIC CABLE IN CONDUIT, SERVICE, NO. 6 2 C	FOOT	31
	ELECTRIC CABLE IN CONDUIT, EQUIPMENT GROUNDING CONDUCTOR, NO. 6 1C	FOOT	613
	STEEL MAST ARM ASSEMBLY AND POLE, 24 FT.	EACH	1
	STEEL MAST ARM ASSEMBLY AND POLE, 32 FT.	EACH	1
	STEEL COMBINATION MAST ARM ASSEMBLY AND POLE 64 FT.	EACH	1
	STEEL COMBINATION MAST ARM ASSEMBLY AND POLE 66 FT.	EACH	1
	CONCRETE FOUNDATION, TYPE A	FOOT	4
	CONCRETE FOUNDATION, TYPE E 30-INCH DIAMETER	FOOT	10
	CONCRETE FOUNDATION, TYPE E 36-INCH DIAMETER	FOOT	13.5
	CONCRETE FOUNDATION, TYPE E 42-INCH DIAMETER	FOOT	46
	DRILL EXISTING HANDHOLE	EACH	9
	SIGNAL HEAD, LED, 1-FACE, 3-SECTION, MAST-ARM MOUNTED	EACH	12
	SIGNAL HEAD, LED, 1-FACE, 3-SECTION, BRACKET MOUNTED	EACH	2
	SIGNAL HEAD, LED, 1-FACE, 5-SECTION, BRACKET MOUNTED	EACH	2
	SIGNAL HEAD, LED, 1-FACE, 5-SECTION, MAST-ARM MOUNTED	EACH	6
	TRAFFIC SIGNAL BACKPLATE, LOUVERED, FORMED PLASTIC	EACH	18
*	RELOCATE EXISTING EMERGENCY VEHICLE PRIORITY SYSTEM, DETECTOR UNIT	EACH	2
	REMOVE EXISTING TRAFFIC SIGNAL EQUIPMENT	EACH	1
	REMOVE EXISTING HANDHOLE	EACH	1
	REMOVE EXISTING CONCRETE FOUNDATION	EACH	6
	CLOSED CIRCUIT TELEVISION DOME CAMERA, HD	EACH	1
*	EMERGENCY VEHICLE PRIORITY SYSTEM LINE SENSOR CABLE, NO. 20 3/C	FOOT	660
	OUTDOOR RATED NETWORK CABLE	FOOT	159
	SERVICE INSTALLATION, GROUND MOUNTED, METERED	EACH	1
	REMOTE CONTROLLED VIDEO SYSTEM	EACH	1
	LAYER II (DATALINK) SWITCH	EACH	1
	TERMINATE FIBER IN CABINET	EACH	12
	TACTICS LICENSE EXPANSION	EACH	1
	FULL-ACTUATED CONTROLLER IN EXISTING CABINET	EACH	1
	REMOVE AND REPLACE BATTERIES FOR UNINTERUPTABLE POWER SUPPLY, EXTENDED	EACH	1
	FIBER OPTIC INTERCONNECT CENTER, 48 PORT	EACH	1
	LED SIGNAL FACE, LENS COVER	EACH	22
	VIDEO VEHICLE DETECTION SYSTEM, SINGLE APPROACH	EACH	2
	CAMERA MOUNTING ASSEMBLY	EACH	1

* - 100% COST TO THE CITY OF WEST CHICAGO

TS 12375
IDOT TACTICS
FORMER EAGLE 5A

MODEL: Default
FILE NAME: pw:\\h-pw.bentley.com:h-pw-01\Documents01 Active Projects\MW-Cr-S-1689593100 - IL 64\Phase II\2 Design\CADd\Plan Sheets\Signal\IL64West Corridor Signal\D108121-sht-ts-46 KHA.dgn

Kimley»Horn
© 2023 KIMLEY-HORN AND ASSOCIATES, INC.
4001 WINFIELD ROAD, SUITE 600
WARRENVILLE, IL 60555
PHONE: 630-487-5550
WWW.KIMLEY-HORN.COM

USER NAME =	DESIGNED -	REVISED -
	DRAWN -	REVISED -
PLOT SCALE =	CHECKED -	REVISED -
PLOT DATE =	DATE -	REVISED -

STATE OF ILLINOIS
DEPARTMENT OF TRANSPORTATION

MAST ARM MOUNTED STREET NAME SIGNS AND SCHEDULE OF QUANTITIES
IL 64 (NORTH AVE) AND PRINCE CROSSING RD

SCALE: N.T.S. | SHEET OF SHEETS | STA. TO STA.

F.A.P. RTE.	SECTION	COUNTY	TOTAL SHEETS	SHEET NO.
307	2020-263-SUR,SW&TS	DUPAGE	529	147

CONTRACT NO. 62N33

ILLINOIS | FED. AID PROJECT

REMOVAL NOTES

THE FOLLOWING ITEMS SHALL BE REMOVED BY THE CONTRACTOR AND SHALL BE DISPOSED OF BY THEM OUTSIDE THE RIGHT-OF-WAY AT THEIR EXPENSE. THE SALVAGE VALUE OF THE REMOVED EQUIPMENT SHALL BE REFLECTED IN CONTRACT BID PRICE.

18	EACH	SIGNAL HEAD, 1 FACE, 3 SECTION
10	EACH	TRAFFIC SIGNAL BACKPLATE
3	EACH	COMBINATION MAST ARM ASSEMBLY AND POLE
3	EACH	TRAFFIC SIGNAL POST
4	EACH	STREET NAME SIGN PANEL
1	EACH	CONTROLLER (M41)
1	EACH	GROUND MOUNTED SERVICE

THE FOLLOWING ITEMS SHALL BE REMOVED BY THE CONTRACTOR, SHALL REMAIN THE PROPERTY OF THE ILLINIS DEPARTMENT OF TRANSPORTATION, AND SHALL BE DELIVERED BY THE CONTRACTOR TO IDOT'S TRAFFIC SIGNAL MAINTENANCE CONTRACTOR'S MAIN FACILITY.

1	EACH	VIDEO VEHICLE DETECTION SYSTEM (COMPLETE INTERSECTION)

NOTES

1. THE EXISTING TRAFFIC SIGNAL EQUIPMENT SHALL NOT BE REMOVED UNTIL THE PROPOSED TRAFFIC SIGNAL EQUIPMENT IS FULLY OPERATIONAL OR AS DIRECTED BY THE ENGINEER.
2. ALL EXISTING TRAFFIC SIGNAL CABLE NO LONGER REQUIRED SHALL BE REMOVED.
3. THE ELECTRIC METER SHALL BE RELOCATED FROM THE EXISTING TRAFFIC SIGNAL CABINET TO THE PROPOSED GROUND MOUNTED METERED SERVICE CABINET.

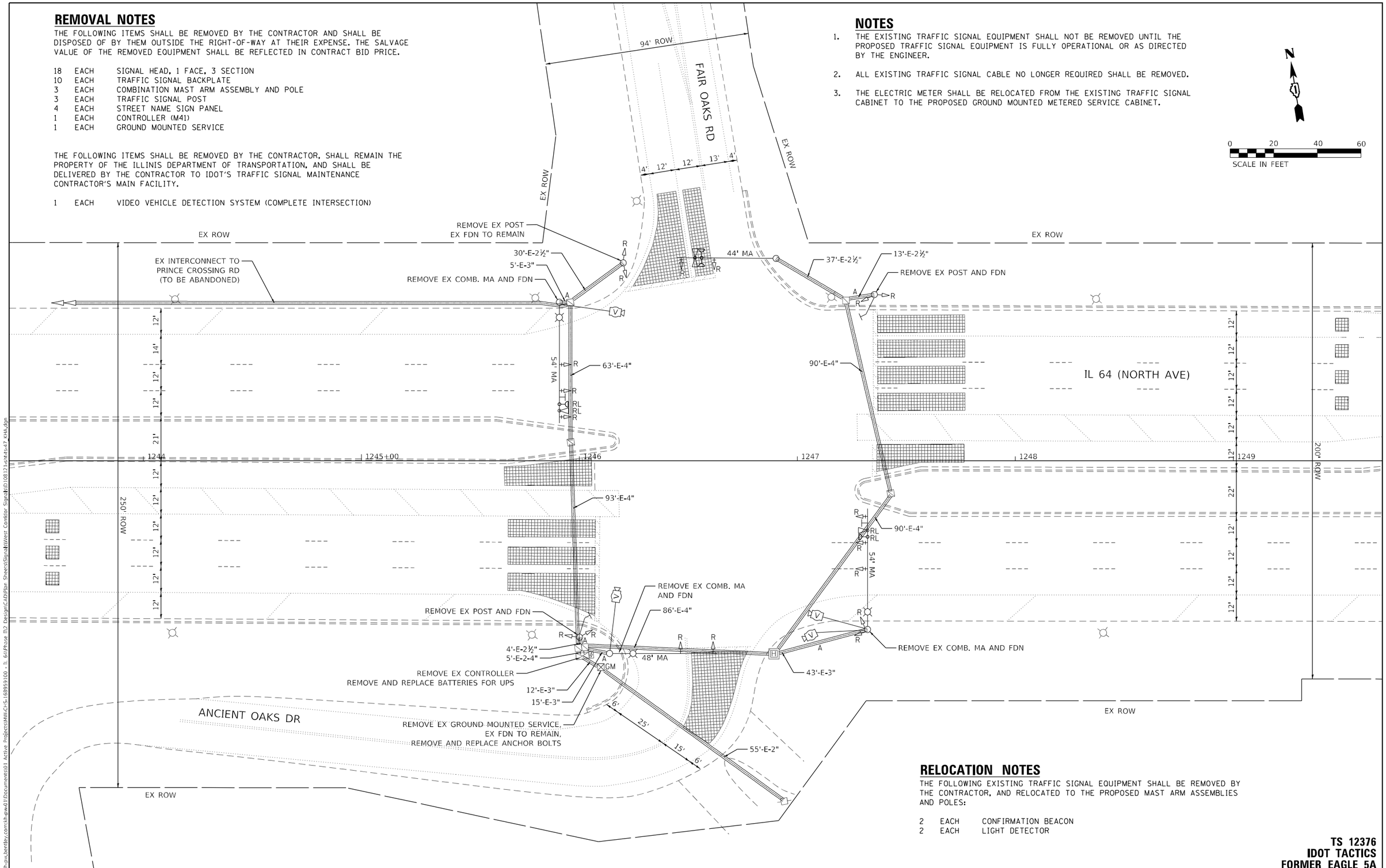

RELOCATION NOTES

THE FOLLOWING EXISTING TRAFFIC SIGNAL EQUIPMENT SHALL BE REMOVED BY THE CONTRACTOR, AND RELOCATED TO THE PROPOSED MAST ARM ASSEMBLIES AND POLES:

2	EACH	CONFIRMATION BEACON
2	EACH	LIGHT DETECTOR

TS 12376
IDOT TACTICS
FORMER EAGLE 5A

MODEL: Default
FILE NAME: pw:\\kh-pw.bentley.com:khpw01\Documents\01 Active Projects\MV-CHS-168959100 - IL 64\Phase III\2 Design\CAD\Plan Sheets\Signal\West Corridor Signal\01082121-sht4-sht47 KHA.dgn

Kimley»Horn
© 2022 KIMLEY-HORN AND ASSOCIATES, INC.
4201 WINFIELD ROAD, SUITE 600
WARRENVILLE, IL 60555
PHONE: 630-487-5550
WWW.KIMLEY-HORN.COM

USER NAME =	DESIGNED -	REVISED -
	DRAWN -	REVISED -
PLOT SCALE =	CHECKED -	REVISED -
PLOT DATE =	DATE -	REVISED -

STATE OF ILLINOIS
DEPARTMENT OF TRANSPORTATION

TRAFFIC SIGNAL EQUIPMENT REMOVAL PLAN
IL 64 (NORTH AVE) AND FAIR OAKS RD/ANCIENT OAKS DR

SCALE: 1" = 20' | SHEET OF SHEETS | STA. TO STA.

F.A.P. RTE.	SECTION	COUNTY	TOTAL SHEETS	SHEET NO.
307	2020-263-SUR,SW&TS	DUPAGE	529	148
		CONTRACT NO. 62N33		
	ILLINOIS	FED. AID PROJECT		

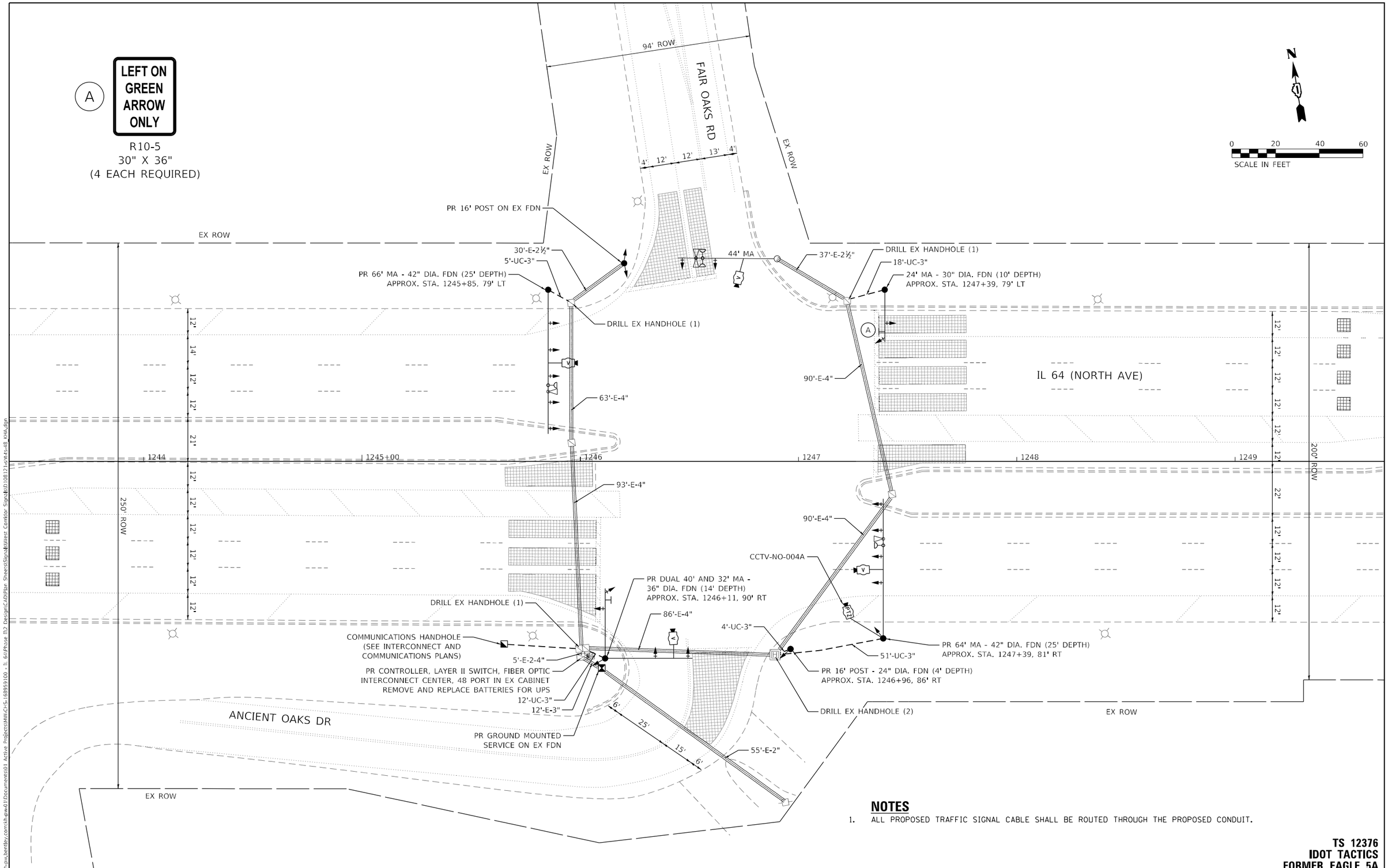

NOTES

1. ALL PROPOSED TRAFFIC SIGNAL CABLE SHALL BE ROUTED THROUGH THE PROPOSED CONDUIT.

TS 12376
IDOT TACTICS
FORMER EAGLE 5A

MODEL: Default
FILE NAME: pw:\\uk-pw.bentley.com:uk-pw-01\Documents\01 Active Projects\IW-CI-S-168959100 - IL 64\Phase III\2 Design\CAD\Plan Sheets\Signal\West Corridor Signal\010812-int-48 KHA.dgn

Kimley»Horn
© 2022 KIMLEY-HORN AND ASSOCIATES, INC.
4201 WINFIELD ROAD, SUITE 600
WARRENVILLE, IL 60555
PHONE: 630-487-5550
WWW.KIMLEY-HORN.COM

USER NAME =	DESIGNED -	REVISED -	
	DRAWN -	REVISED -	
PLOT SCALE =	CHECKED -	REVISED -	
PLOT DATE =	DATE -	REVISED -	

STATE OF ILLINOIS
DEPARTMENT OF TRANSPORTATION

TRAFFIC SIGNAL MODERNIZATION PLAN
IL 64 (NORTH AVE) AND FAIR OAKS RD/ANCIENT OAKS DR

SCALE: 1" = 20' | SHEET OF SHEETS | STA. TO STA.

F.A.P. RTE.	SECTION	COUNTY	TOTAL SHEETS	SHEET NO.
307	2020-263-SUR,SW&TS	DUPAGE	529	149
		CONTRACT NO. 62N33		
		ILLINOIS	FED. AID PROJECT	

EXISTING CONTROLLER SEQUENCE

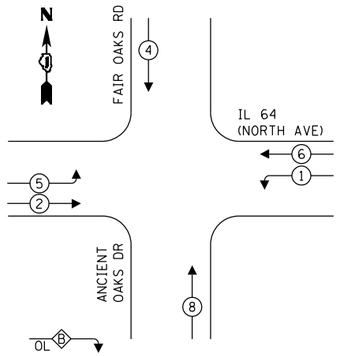

PROPOSED CONTROLLER SEQUENCE

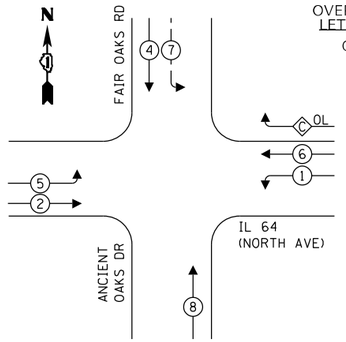

OVERLAP LETTER		PERMISSIVE PHASE		PROTECTED PHASE
C	=	6	+	7

EXISTING AND PROPOSED EMERGENCY VEHICLE PREEMPTION SEQUENCE

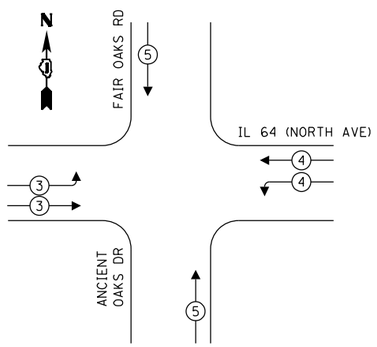

LEGEND:

- PROTECTED PHASE
- PROTECTED/PERMITTED PHASE
- PEDESTRIAN PHASE
- OVERLAP

TRAFFIC SIGNAL ELECTRICAL SERVICE REQUIREMENTS

TYPE	QUANTITY	UNIT WATTAGE	TOTAL WATTAGE
SIGNAL HEAD 1 OR 3-SECTION	18	11	198
4-SECTION	-	14	-
5-SECTION	4	13	52
PROGRAMMABLE 3-SECTION	-	22	-
4-SECTION	-	32	-
5-SECTION	-	28	-
PEDESTRIAN SIGNAL	-	15	-
CONTROLLER	1	150	150
MASTER CONTROLLER	-	100	-
UPS	1	25	25
DETECTION VIDEO	4	20	80
BLANK-OUT SIGN	-	25	-
NETWORK SWITCH LAYER II OR III	1	35	35
CELLULAR MODEM	-	15	-
PTZ	1	75	75
TOTAL UPS SIZING			615
UPS CHARGING	1	225	225
BATTERY HEATER MAT	1	180	180
CABINET HEATER	1	200	200
FLASHER	-	15	-
LED STREET NAME SIGN	-	120	-
LUMINAIRE	-	240	-
TOTAL SERVICE WIRE SIZING			1220

ENERGY COSTS TO:
ILLINOIS DEPARTMENT OF TRANSPORTATION
201 W CENTER CT
SCHAUMBURG, IL 60196

ENERGY SUPPLY: COMPANY: COMED
PHONE: (866) 639-3532
ACCOUNT NUMBER: 28380-06047

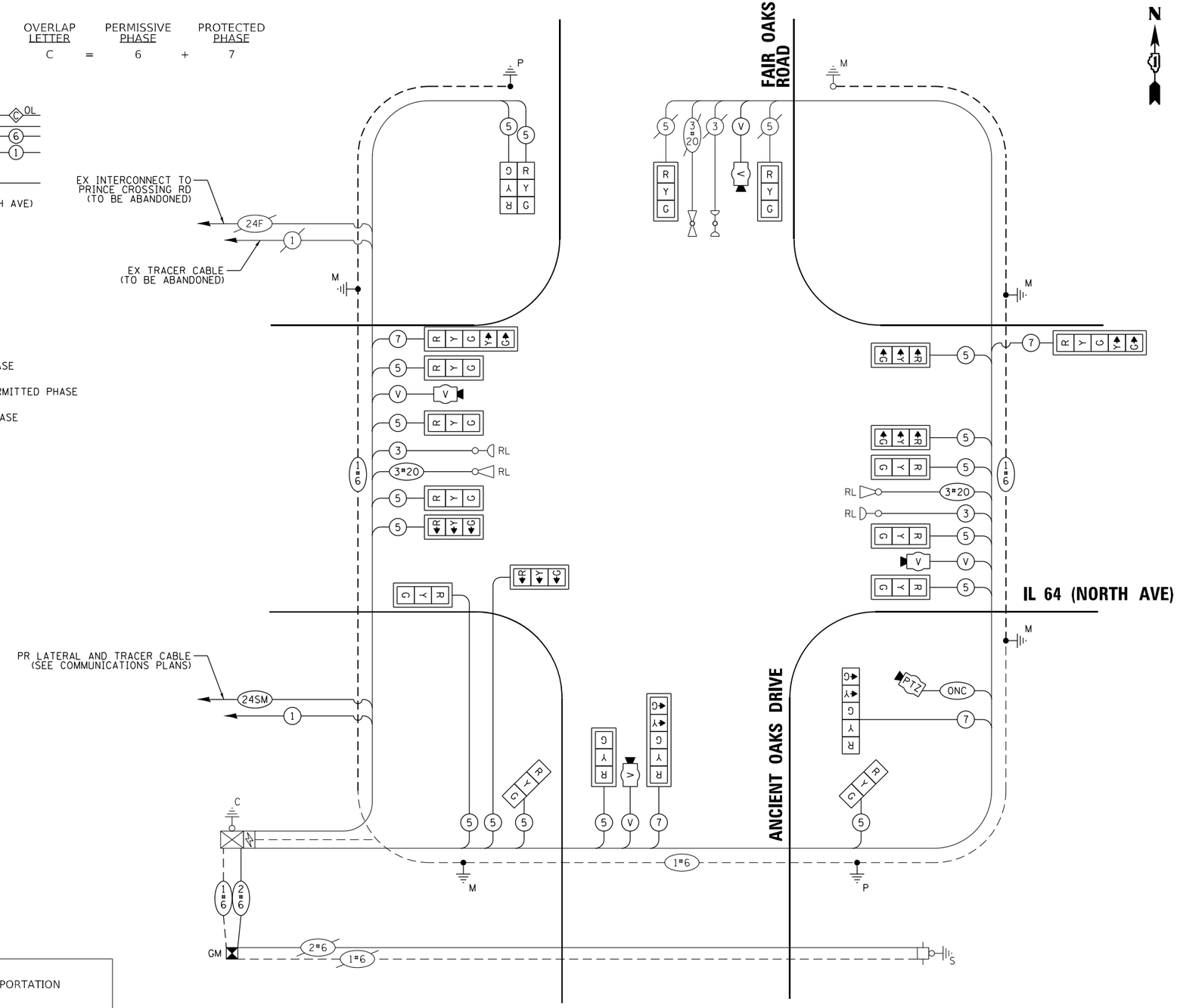

CABLE PLAN

(NOT TO SCALE)

TS 12376
IDOT TACTICS
FORMER EAGLE 5A

MODEL: Default
FILE NAME: pw:\\uh-pw.bentley.com:sh-pw-01\Documents\01 Active Projects\MW-CHS-1689939100 - IL 64\Phase III\2 Design\CADD\Plan Sheets\Signal\WEST Corridor Signal\0108121-sht4-sht49 KHA.dgn

Kimley»Horn
© 2022 KIMLEY-HORN AND ASSOCIATES, INC.
4201 WINFIELD ROAD, SUITE 603
WARRENVILLE, IL 60555
PHONE: 630-487-5550
WWW.KIMLEY-HORN.COM

USER NAME =	DESIGNED -	REVISED -
	DRAWN -	REVISED -
PLOT SCALE =	CHECKED -	REVISED -
PLOT DATE =	DATE -	REVISED -

STATE OF ILLINOIS
DEPARTMENT OF TRANSPORTATION

CABLE PLAN, PHASE DESIGNATION DIAGRAM, AND EMERGENCY VEHICLE PREEMPTION SEQUENCE
IL 64 (NORTH AVE) AND FAIR OAKS RD/ANCIENT OAKS DR

SCALE: N.T.S. | SHEET OF SHEETS | STA. TO STA.

F.A.P. RTE.	SECTION	COUNTY	TOTAL SHEETS	SHEET NO.
307	2020-263-SUR,SW&TS	DUPAGE	529	150
		CONTRACT NO. 62N33		
		ILLINOIS	FED. AID PROJECT	

SIGN PANEL – TYPE 2

ALL DIMENSIONS ARE IN INCHES UNLESS OTHERWISE NOTED

DESIGN SERIES	AREA (SQ FT)	SIGN PANEL TYPE	SHEETING TYPE	QTY. REQUIRED
D	12.5	2	ZZ	2

DESIGN SERIES	AREA (SQ FT)	SIGN PANEL TYPE	SHEETING TYPE	QTY. REQUIRED
C	20	2	ZZ	1

DESIGN SERIES	AREA (SQ FT)	SIGN PANEL TYPE	SHEETING TYPE	QTY. REQUIRED
C	20	2	ZZ	1

SCHEDULE OF QUANTITIES

	ITEM DESCRIPTION	UNIT	QUANTITY
	SIGN PANEL - TYPE 2	SQ FT	105
	UNDERGROUND CONDUIT, GALVANIZED STEEL, 2" DIA.	FOOT	5
	UNDERGROUND CONDUIT, GALVANIZED STEEL, 3" DIA.	FOOT	90
	MAINTENANCE OF EXISTING TRAFFIC SIGNAL INSTALLATION	EACH	1
	ELECTRIC CABLE IN CONDUIT, SIGNAL NO. 14 3C	FOOT	551
	ELECTRIC CABLE IN CONDUIT, SIGNAL NO. 14 5C	FOOT	3596
	ELECTRIC CABLE IN CONDUIT, SIGNAL NO. 14 7C	FOOT	1026
	ELECTRIC CABLE IN CONDUIT, SERVICE, NO. 6 2 C	FOOT	549
	ELECTRIC CABLE IN CONDUIT, EQUIPMENT GROUNDING CONDUCTOR, NO. 6 1C	FOOT	114
	TRAFFIC SIGNAL POST, GALVANIZED STEEL 16 FT.	EACH	2
	STEEL MAST ARM ASSEMBLY AND POLE, 24 FT.	EACH	1
	STEEL MAST ARM ASSEMBLY AND POLE, 64 FT.	EACH	1
	STEEL MAST ARM ASSEMBLY AND POLE, 66 FT.	EACH	1
	STEEL MAST ARM ASSEMBLY AND POLE WITH DUAL MAST ARMS, 32 FT. AND 40 FT.	EACH	1
	CONCRETE FOUNDATION, TYPE A	FOOT	8
	CONCRETE FOUNDATION, TYPE E 30-INCH DIAMETER	FOOT	10
	CONCRETE FOUNDATION, TYPE E 36-INCH DIAMETER	FOOT	14
	CONCRETE FOUNDATION, TYPE E 42-INCH DIAMETER	FOOT	50
	DRILL EXISTING HANDHOLE	EACH	5
	SIGNAL HEAD, LED, 1-FACE, 3-SECTION, MAST-ARM MOUNTED	EACH	14
	SIGNAL HEAD, LED, 1-FACE, 3-SECTION, BRACKET MOUNTED	EACH	4
	SIGNAL HEAD, LED, 1-FACE, 5-SECTION, BRACKET MOUNTED	EACH	1
	SIGNAL HEAD, LED, 1-FACE, 5-SECTION, MAST-ARM MOUNTED	EACH	3
	TRAFFIC SIGNAL BACKPLATE, LOUVERED, FORMED PLASTIC	EACH	17
*	RELOCATE EXISTING EMERGENCY VEHICLE PRIORITY SYSTEM, DETECTOR UNIT	EACH	2
	REMOVE ELECTRIC CABLE FROM CONDUIT	FOOT	2
	REMOVE EXISTING TRAFFIC SIGNAL EQUIPMENT	EACH	1
	REMOVE EXISTING CONCRETE FOUNDATION	EACH	5
	CLOSED CIRCUIT TELEVISION DOME CAMERA, HD	EACH	1
*	EMERGENCY VEHICLE PRIORITY SYSTEM LINE SENSOR CABLE, NO. 20 3/C	FOOT	549
	OUTDOOR RATED NETWORK CABLE	FOOT	258
	SERVICE INSTALLATION, GROUND MOUNTED, METERED	EACH	1
	REMOTE CONTROLLED VIDEO SYSTEM	EACH	1
	LAYER II (DATALINK) SWITCH	EACH	1
	TERMINATE FIBER IN CABINET	EACH	12
	TACTICS LICENSE EXPANSION	EACH	1
	FULL-ACTUATED CONTROLLER IN EXISTING CABINET	EACH	1
	REMOVE AND REPLACE BATTERIES FOR UNINTERUPTABLE POWER SUPPLY, EXTENDED	EACH	1
	FIBER OPTIC INTERCONNECT CENTER, 48 PORT	EACH	1
	LED SIGNAL FACE, LENS COVER	EACH	22
	VIDEO VEHICLE DETECTION SYSTEM, SINGLE APPROACH	EACH	4
	CAMERA MOUNTING ASSEMBLY	EACH	1

* - 100% COST TO WAYNE TOWNSHIP

TS 12376
IDOT TACTICS
FORMER EAGLE 5A

MODEL: Default
FILE NAME: pw:\\uk-pw.bentley.com:uk-pw401\Documents\01 Active Projects\HW-CHS-168959100 - IL 64\Phase II\2 Design\CAD\Plan Sheets\Signal\IL64West Corridor Signal\01082121-sht4-SQ-KHA.dgn

Kimley»Horn
© 2022 KIMLEY-HORN AND ASSOCIATES, INC.
4201 WINFIELD ROAD, SUITE 600
WARRENVILLE, IL 60555
PHONE: 630-487-5550
WWW.KIMLEY-HORN.COM

USER NAME =	DESIGNED -	REVISED -
	DRAWN -	REVISED -
PLOT SCALE =	CHECKED -	REVISED -
PLOT DATE =	DATE -	REVISED -

STATE OF ILLINOIS
DEPARTMENT OF TRANSPORTATION

SCHEDULE OF QUANTITIES
IL 64 (NORTH AVE) AND FAIR OAKS RD/ANCIENT OAKS DR

SCALE: N.T.S. | SHEET OF SHEETS | STA. TO STA.

F.A.P. RTE.	SECTION	COUNTY	TOTAL SHEETS	SHEET NO.
307	2020-263-SUR,SW&TS	DUPAGE	529	151
		CONTRACT NO. 62N33		
		ILLINOIS	FED. AID PROJECT	

NOTES

1. THE EXISTING TRAFFIC SIGNAL EQUIPMENT SHALL NOT BE REMOVED UNTIL THE PROPOSED TRAFFIC SIGNAL EQUIPMENT IS FULLY OPERATIONAL OR AS DIRECTED BY THE ENGINEER.
2. ALL EXISTING TRAFFIC SIGNAL CABLE NO LONGER REQUIRED SHALL BE REMOVED.

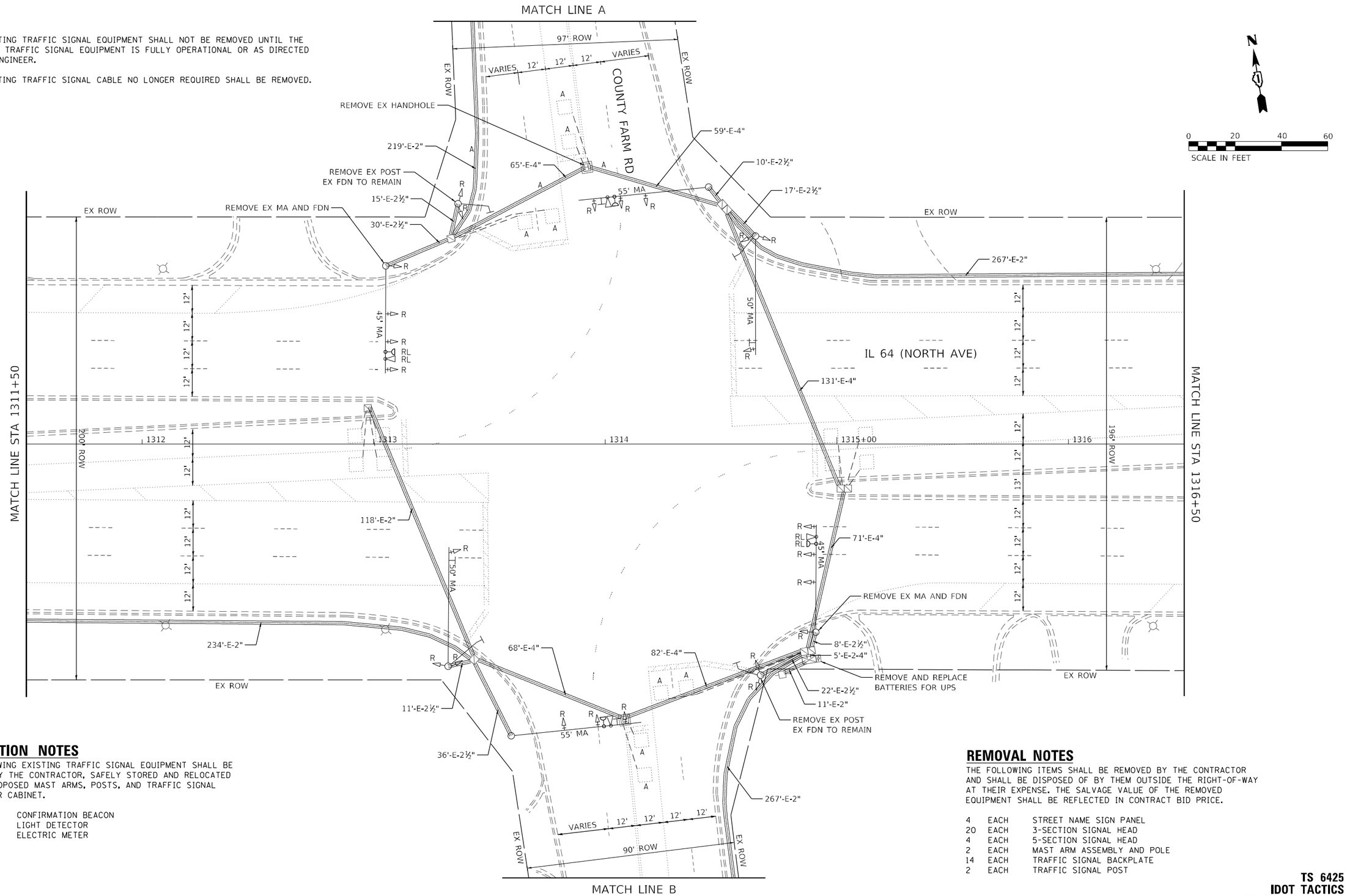

RELOCATION NOTES

THE FOLLOWING EXISTING TRAFFIC SIGNAL EQUIPMENT SHALL BE REMOVED BY THE CONTRACTOR, SAFELY STORED AND RELOCATED TO THE PROPOSED MAST ARMS, POSTS, AND TRAFFIC SIGNAL CONTROLLER CABINET.

2	EACH	CONFIRMATION BEACON
2	EACH	LIGHT DETECTOR
1	EACH	ELECTRIC METER

REMOVAL NOTES

THE FOLLOWING ITEMS SHALL BE REMOVED BY THE CONTRACTOR AND SHALL BE DISPOSED OF BY THEM OUTSIDE THE RIGHT-OF-WAY AT THEIR EXPENSE. THE SALVAGE VALUE OF THE REMOVED EQUIPMENT SHALL BE REFLECTED IN CONTRACT BID PRICE.

4	EACH	STREET NAME SIGN PANEL
20	EACH	3-SECTION SIGNAL HEAD
4	EACH	5-SECTION SIGNAL HEAD
2	EACH	MAST ARM ASSEMBLY AND POLE
14	EACH	TRAFFIC SIGNAL BACKPLATE
2	EACH	TRAFFIC SIGNAL POST

TS 6425
IDOT TACTICS
FORMER EAGLE 2E

MODEL: Default
FILE NAME: pw:\\h-pw.bentley.com:h-pw-01\Documents\01 Active Projects\MW-Cr-S-1689939100 - IL 64\Phase II\2 Design\CADrBar Sheets\Signal\West Corridor Signal\D108121-sht4-51 KHA.dgn

Kimley»Horn
© 2023 KIMLEY-HORN AND ASSOCIATES, INC.
4201 WINFIELD ROAD, SUITE 603
WARRENVILLE, IL 60555
PHONE: 630-487-5550
WWW.KIMLEY-HORN.COM

USER NAME =	DESIGNED -	REVISED -
	DRAWN -	REVISED -
PLOT SCALE =	CHECKED -	REVISED -
PLOT DATE =	DATE -	REVISED -

STATE OF ILLINOIS
DEPARTMENT OF TRANSPORTATION

TRAFFIC SIGNAL EQUIPMENT REMOVAL PLAN
IL 64 (NORTH AVE) AND COUNTY FARM RD

SCALE: 1" = 20' | SHEET OF SHEETS | STA. TO STA.

F.A.P. RTE.	SECTION	COUNTY	TOTAL SHEETS	SHEET NO.
307	2020-263-SUR,SW&TS	DUPAGE	529	152
		CONTRACT NO. 62N33		
		ILLINOIS	FED. AID PROJECT	

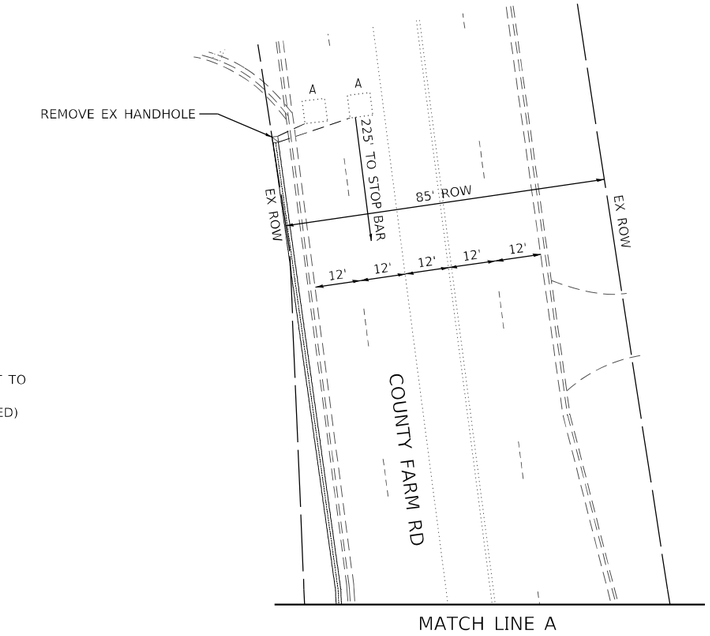

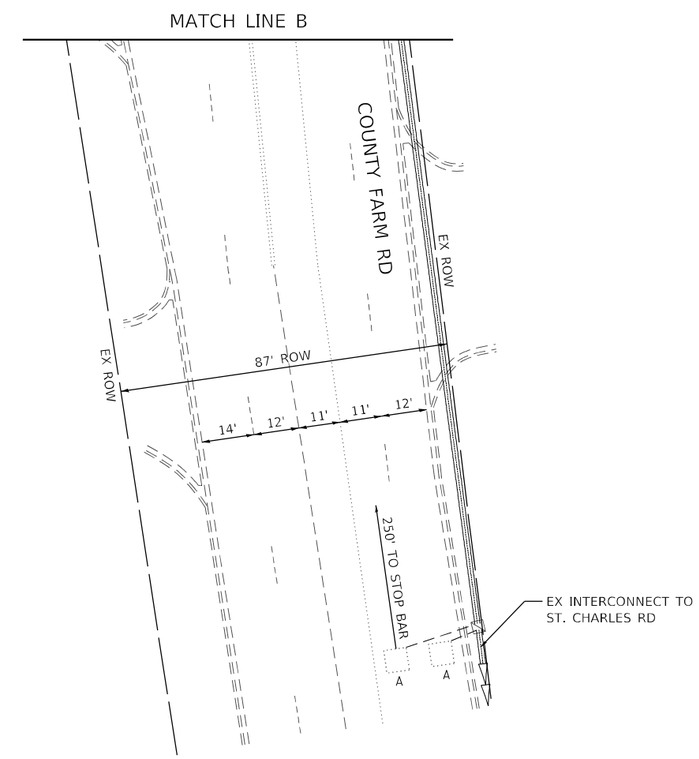

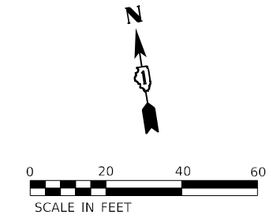

TS 6425
IDOT TACTICS
FORMER EAGLE 2E

MODEL: Default
FILE NAME: pw:\\lh-pw.kimley.com:lh-pw-01\Documents\01 Active Projects\HW-Chi-S-168959100 - IL 64\Phase II\2 Design\CAD\Plan Sheets\Signal\West Corridor Signal\108121-IN14-S2_KHA.dgn

Kimley»Horn
© 2023 KIMLEY-HORN AND ASSOCIATES, INC.
4201 WINFIELD ROAD, SUITE 600
WARRENVILLE, IL 60555
PHONE: 630-487-5550
WWW.KIMLEY-HORN.COM

USER NAME =	DESIGNED -	REVISED -	
	DRAWN -	REVISED -	
PLOT SCALE =	CHECKED -	REVISED -	
PLOT DATE =	DATE -	REVISED -	

STATE OF ILLINOIS
DEPARTMENT OF TRANSPORTATION

TRAFFIC SIGNAL EQUIPMENT REMOVAL PLAN
IL 64 (NORTH AVE) AND COUNTY FARM RD

SCALE: 1" = 20' | SHEET OF SHEETS | STA. TO STA.

F.A.P. RTE.	SECTION	COUNTY	TOTAL SHEETS	SHEET NO.
307	2020-263-SUR,SW&TS	DUPAGE	529	153
		CONTRACT NO. 62N33		
	ILLINOIS	FED. AID PROJECT		

NOTES

1. ALL PROPOSED TRAFFIC SIGNAL CABLE SHALL BE ROUTED THROUGH THE PROPOSED CONDUIT.
2. A SEPARATE LEAD-IN CABLE SHALL BE INSTALLED FOR THE DETECTOR LOOPS ON IL 64 (NORTH AVE).
3. THE EXISTING SERVICE METER SHALL BE RELOCATED TO THE PROPOSED GROUND MOUNTED SERVICE CABINET. THE EXISTING SERVICE METER HOUSING SHALL REMAIN AT THE EXISTING TRAFFIC SIGNAL CONTROLLER CABINET AND ALL HOLES BETWEEN THE EXISTING HOUSING AND THE EXISTING CABINET SHALL BE PLUGGED. THIS WORK SHALL BE INCLUDED IN THE PAY ITEM SERVICE INSTALLATION, GROUND MOUNTED, METERED.
4. PROPOSED CONDUIT SHALL BE SPLICED TO THE EXISTING CONDUIT AND EXTENDED VERTICALLY THROUGH THE PROPOSED FOUNDATION AT THE GROUND MOUNTED SERVICE LOCATION. THE COST OF THE CONDUIT SHALL BE INCLUDED IN THE COST OF CONCRETE FOUNDATION, TYPE A.

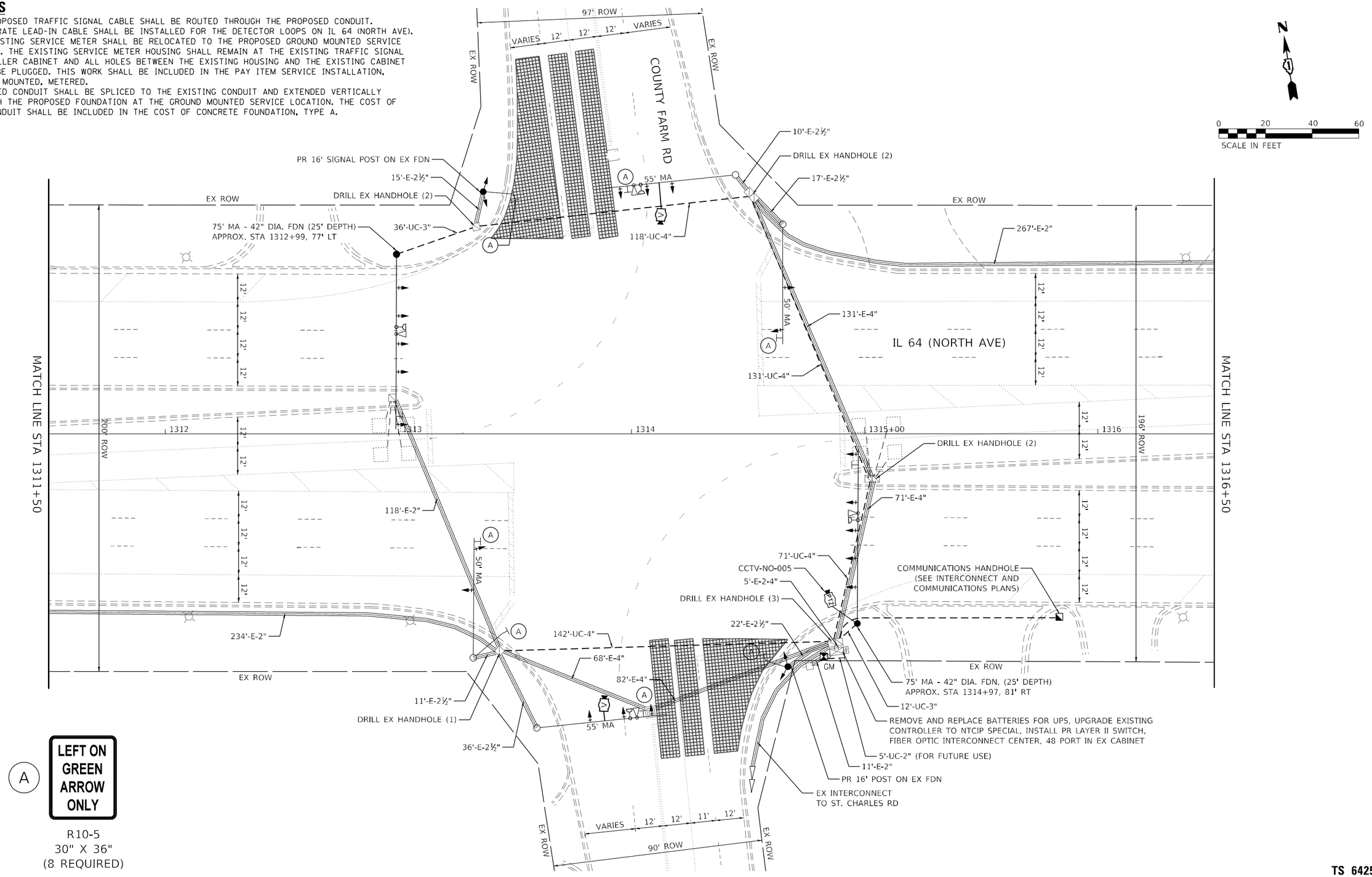

TS 6425
IDOT TACTICS
FORMER EAGLE 2E

MODEL: Default
FILE NAME: pw:\\k-pw.bentley.com:bl-pw01\Documents\01 Active Projects\MV-CHS-168959100 - IL 64\Phase II\2 Design\CAD\Plan Sheets\Signal\West Corridor Signals\D108121-sht-ls-53_KHA.dgn

Kimley»Horn
© 2022 KIMLEY-HORN AND ASSOCIATES, INC.
4201 WINFIELD ROAD, SUITE 600
WARRENVILLE, IL 60555
PHONE: 630-487-5550
WWW.KIMLEY-HORN.COM

USER NAME =	DESIGNED -	REVISED -
	DRAWN -	REVISED -
PLOT SCALE =	CHECKED -	REVISED -
PLOT DATE =	DATE -	REVISED -

STATE OF ILLINOIS
DEPARTMENT OF TRANSPORTATION

TRAFFIC SIGNAL MODERNIZATION PLAN
IL 64 (NORTH AVE) AND COUNTY FARM RD

SCALE: 1" = 20' | SHEET OF SHEETS | STA. TO STA.

F.A.P. RTE.	SECTION	COUNTY	TOTAL SHEETS	SHEET NO.
307	2020-263-SUR,SW&TS	DUPAGE	529	154
		CONTRACT NO. 62N33		
		ILLINOIS	FED. AID PROJECT	

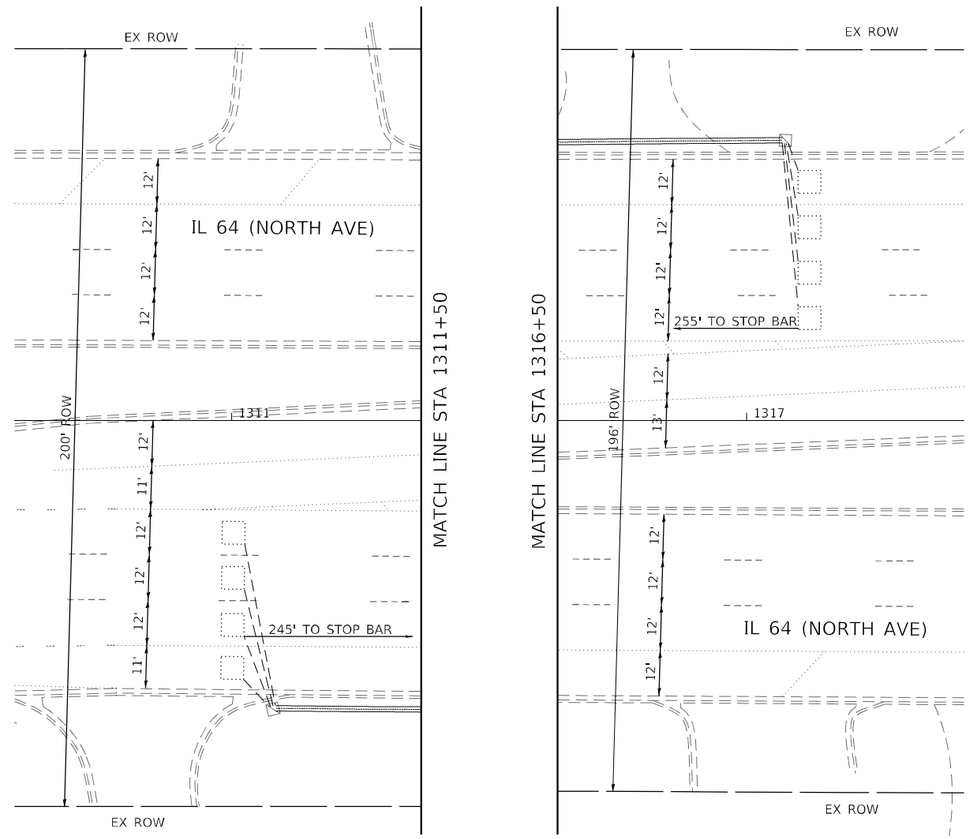

TS 6425
IDOT TACTICS
FORMER EAGLE 2E

MODEL: Default
FILE NAME: pw:\\ih-pw.kimley.com:ih-pw-01\Documents\01 Active Projects\HW-Chi-S-168959100 - IL 64\Phase II\2 Design\CAD\Plan Sheets\Signal\West Corridor Signal\108121-IL64-S4_KHA.dgn

Kimley»Horn
© 2023 KIMLEY-HORN AND ASSOCIATES, INC.
4201 WINFIELD ROAD, SUITE 600
WARRENVILLE, IL 60555
PHONE: 630-487-5550
WWW.KIMLEY-HORN.COM

USER NAME =	DESIGNED -	REVISED -
	DRAWN -	REVISED -
PLOT SCALE =	CHECKED -	REVISED -
PLOT DATE =	DATE -	REVISED -

STATE OF ILLINOIS
DEPARTMENT OF TRANSPORTATION

TRAFFIC SIGNAL MODERNIZATION PLAN
IL 64 (NORTH AVE) AND COUNTY FARM RD

SCALE: 1" = 20' | SHEET OF SHEETS | STA. TO STA.

F.A.P. RTE.	SECTION	COUNTY	TOTAL SHEETS	SHEET NO.
307	2020-263-SUR,SW&TS	DUPAGE	529	155
		CONTRACT NO. 62N33		
		ILLINOIS	FED. AID PROJECT	

EXISTING AND PROPOSED CONTROLLER SEQUENCE

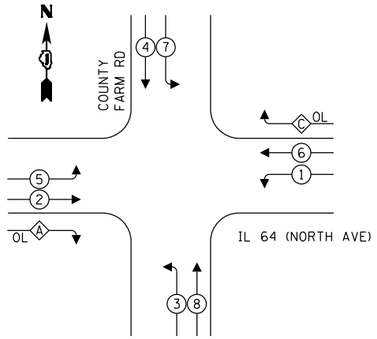

LEGEND:

- PROTECTED PHASE
- PROTECTED/PERMITTED PHASE
- PEDESTRIAN PHASE
- OL — OVERLAP

OVERLAP LETTER		PERMISSIVE PHASE		PROTECTED PHASE
A	=	2	+	3
C	=	6	+	7

EXISTING AND PROPOSED EMERGENCY VEHICLE PREEMPTION SEQUENCE

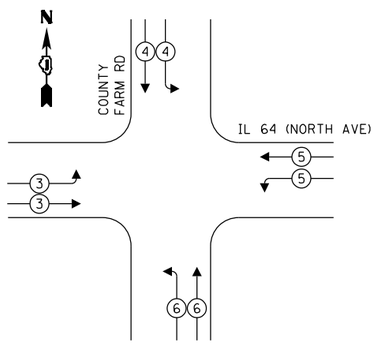

TRAFFIC SIGNAL ELECTRICAL SERVICE REQUIREMENTS

TYPE		QUANTITY	UNIT WATTAGE	TOTAL WATTAGE
SIGNAL HEAD	1 OR 3-SECTION	20	11	220
	4-SECTION	-	14	-
	5-SECTION	4	13	52
PROGRAMMABLE	3-SECTION	-	22	-
	4-SECTION	-	32	-
	5-SECTION	-	28	-
PEDESTRIAN SIGNAL		-	15	-
CONTROLLER		1	150	150
MASTER CONTROLLER		-	100	-
UPS		1	25	25
DETECTION	VIDEO	2	20	40
BLANK-OUT SIGN		-	25	-
NETWORK SWITCH	LAYER II OR III	1	35	35
CELLULAR MODEM		-	15	-
PTZ		1	75	75
	TOTAL UPS SIZING			597
UPS CHARGING		1	225	225
BATTERY HEATER MAT		1	180	180
CABINET HEATER		1	200	200
FLASHER		-	15	-
LED STREET NAME SIGN		-	120	-
LUMINAIRE		-	240	-
	TOTAL SERVICE WIRE SIZING			1202

ENERGY COSTS TO:
ILLINOIS DEPARTMENT OF TRANSPORTATION
201 W CENTER CT
SCHAUMBURG, IL 60196

ENERGY SUPPLY: COMPANY: COMED
PHONE: (866) 639-3532
ACCOUNT NUMBER: 28380-06047

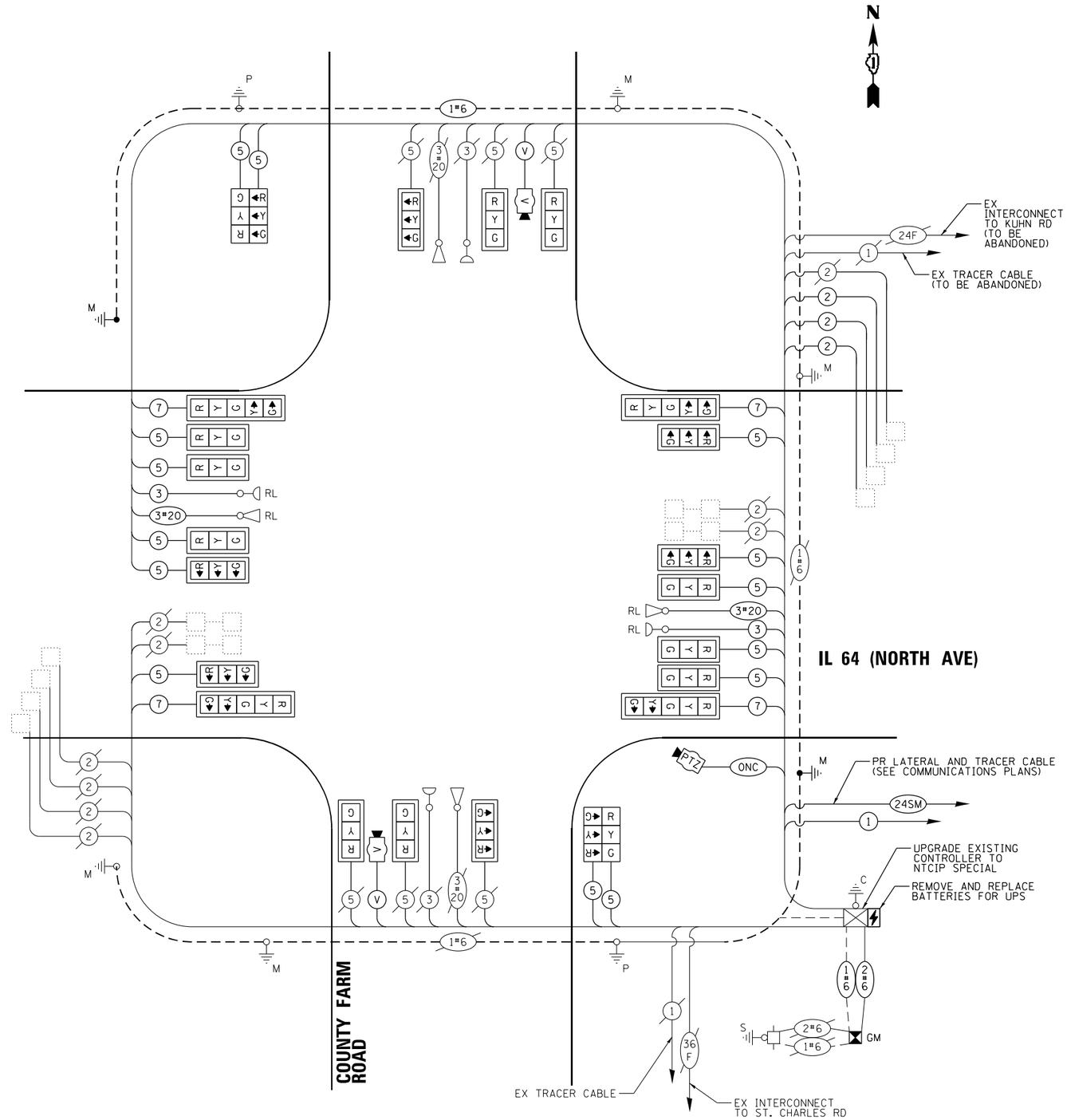

CABLE PLAN

(NOT TO SCALE)

TS 6425
IDOT TACTICS
FORMER EAGLE 2E

MODEL: Default
FILE NAME: pw:\\h-pw.bentley.com:h-pw-01\Documents\01 Active Projects\MW-CHS-16959100 - IL 64\Phase III\2 Design\CAD\Plan Sheets\Signal\West Corridor Signal\D108121-int-ts-55_KHA.dgn

Kimley»Horn
© 2023 KIMLEY-HORN AND ASSOCIATES, INC.
4201 WINFIELD ROAD, SUITE 603
WARRENVILLE, IL 60555
PHONE: 630-487-5550
WWW.KIMLEY-HORN.COM

USER NAME =	DESIGNED -	REVISED -	
	DRAWN -	REVISED -	
PLOT SCALE =	CHECKED -	REVISED -	
PLOT DATE =	DATE -	REVISED -	

STATE OF ILLINOIS
DEPARTMENT OF TRANSPORTATION

CABLE PLAN, PHASE DESIGNATION DIAGRAM, AND EMERGENCY VEHICLE PREEMPTION SEQUENCE
IL 64 (NORTH AVE) AND COUNTY FARM RD

SCALE: N.T.S. | SHEET OF SHEETS | STA. TO STA.

F.A.P. RTE.	SECTION	COUNTY	TOTAL SHEETS	SHEET NO.
307	2020-263-SUR,SW&TS	DUPAGE	529	156
		CONTRACT NO. 62N33		
		ILLINOIS	FED. AID PROJECT	

SIGN PANEL – TYPE 2

ALL DIMENSIONS ARE IN INCHES UNLESS OTHERWISE NOTED

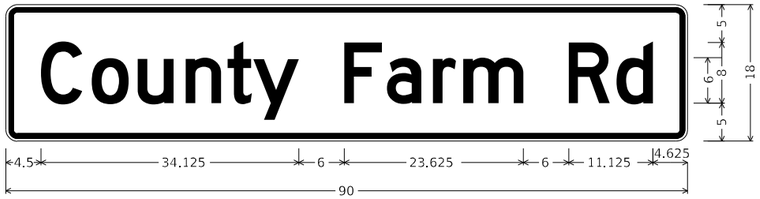

DESIGN SERIES	AREA (SQ FT)	SIGN PANEL TYPE	SHEETING TYPE	QTY. REQUIRED
D	11.25	2	ZZ	2

DESIGN SERIES	AREA (SQ FT)	SIGN PANEL TYPE	SHEETING TYPE	QTY. REQUIRED
D	12.5	2	ZZ	2

SCHEDULE OF QUANTITIES

	ITEM DESCRIPTION	UNIT	QUANTITY
	SIGN PANEL - TYPE 2	SQ FT	47.5
	UNDERGROUND CONDUIT, GALVANIZED STEEL, 2" DIA.	FOOT	5
	UNDERGROUND CONDUIT, GALVANIZED STEEL, 3" DIA.	FOOT	48
	UNDERGROUND CONDUIT, GALVANIZED STEEL, 4" DIA.	FOOT	462
	MAINTENANCE OF EXISTING TRAFFIC SIGNAL INSTALLATION	EACH	1
	ELECTRIC CABLE IN CONDUIT, SIGNAL NO. 14 3C	FOOT	652
	ELECTRIC CABLE IN CONDUIT, SIGNAL NO. 14 5C	FOOT	4168
	ELECTRIC CABLE IN CONDUIT, SIGNAL NO. 14 7C	FOOT	1258
	ELECTRIC CABLE IN CONDUIT, LEAD-IN, NO. 14 1 PAIR	FOOT	1422
	ELECTRIC CABLE IN CONDUIT, SERVICE, NO. 6 2 C	FOOT	36
	ELECTRIC CABLE IN CONDUIT, EQUIPMENT GROUNDING CONDUCTOR, NO. 6 1C	FOOT	546
	TRAFFIC SIGNAL POST, GALVANIZED STEEL 16 FT.	EACH	2
	STEEL MAST ARM ASSEMBLY AND POLE, 75 FT.	EACH	2
	CONCRETE FOUNDATION, TYPE A	FOOT	4
	CONCRETE FOUNDATION, TYPE E 42-INCH DIAMETER	FOOT	50
	DRILL EXISTING HANDHOLE	EACH	10
	SIGNAL HEAD, LED, 1-FACE, 3-SECTION, MAST-ARM MOUNTED	EACH	16
	SIGNAL HEAD, LED, 1-FACE, 3-SECTION, BRACKET MOUNTED	EACH	4
	SIGNAL HEAD, LED, 1-FACE, 5-SECTION, MAST-ARM MOUNTED	EACH	4
	TRAFFIC SIGNAL BACKPLATE, LOUVERED, FORMED PLASTIC	EACH	20
*	RELOCATE EXISTING EMERGENCY VEHICLE PRIORITY SYSTEM, DETECTOR UNIT	EACH	2
	REMOVE ELECTRIC CABLE FROM CONDUIT	FOOT	8082
	REMOVE EXISTING TRAFFIC SIGNAL EQUIPMENT	EACH	1
	REMOVE EXISTING HANDHOLE	EACH	1
	REMOVE EXISTING CONCRETE FOUNDATION	EACH	2
	CLOSED CIRCUIT TELEVISION DOME CAMERA, HD	EACH	1
*	EMERGENCY VEHICLE PRIORITY SYSTEM LINE SENSOR CABLE, NO. 20 3/C	FOOT	652
	OUTDOOR RATED NETWORK CABLE	FOOT	138
	SERVICE INSTALLATION, GROUND MOUNTED, METERED	EACH	1
	REMOTE CONTROLLED VIDEO SYSTEM	EACH	1
	LAYER II (DATALINK) SWITCH	EACH	1
	TERMINATE FIBER IN CABINET	EACH	24
	UPGRADE EXISTING CONTROLLER TO NTCIP SPECIAL	EACH	1
	TACTICS LICENSE EXPANSION	EACH	1
	REMOVE AND REPLACE BATTERIES FOR UNINTERUPTABLE POWER SUPPLY, EXTENDED	EACH	1
	FIBER OPTIC INTERCONNECT CENTER, 48 PORT	EACH	1
	LED SIGNAL FACE, LENS COVER	EACH	24
	VIDEO VEHICLE DETECTION SYSTEM, SINGLE APPROACH	EACH	2

* - 100% COST TO THE VILLAGE OF CAROL STREAM

TS 6425
IDOT TACTICS
FORMER EAGLE 2E

MODEL: Default
FILE NAME: pw:\\jh-pw.bentley.com:jh-pw-01\Documents\01 Active Projects\MW-Cr-S-1639593100 - IL 64\Phase III\2 Design\CADd\Plan Sheets\Sign-IbWest Corridor Sign-IbD108121-sht4-s56_KHA.dgn

Kimley»Horn
© 2022 KIMLEY-HORN AND ASSOCIATES, INC.
4201 WINFIELD ROAD, SUITE 600
WARRENVILLE, IL 60555
PHONE: 630-487-5550
WWW.KIMLEY-HORN.COM

USER NAME =	DESIGNED -	REVISED -
	DRAWN -	REVISED -
PLOT SCALE =	CHECKED -	REVISED -
PLOT DATE =	DATE -	REVISED -

STATE OF ILLINOIS
DEPARTMENT OF TRANSPORTATION

MAST ARM MOUNTED STREET NAME SIGNS AND SCHEDULE OF QUANTITIES
IL 64 (NORTH AVE) AND COUNTY FARM RD

SCALE: N.T.S. | SHEET OF SHEETS | STA. TO STA.

F.A.P. RTE.	SECTION	COUNTY	TOTAL SHEETS	SHEET NO.
307	2020-263-SUR,SW&TS	DUPAGE	529	157

CONTRACT NO. 62N33

ILLINOIS | FED. AID PROJECT

NOTES

1. THE EXISTING TRAFFIC SIGNAL EQUIPMENT SHALL NOT BE REMOVED UNTIL THE PROPOSED TRAFFIC SIGNAL EQUIPMENT IS FULLY OPERATIONAL OR AS DIRECTED BY THE ENGINEER.
2. ALL EXISTING TRAFFIC SIGNAL CABLE NO LONGER REQUIRED SHALL BE REMOVED.

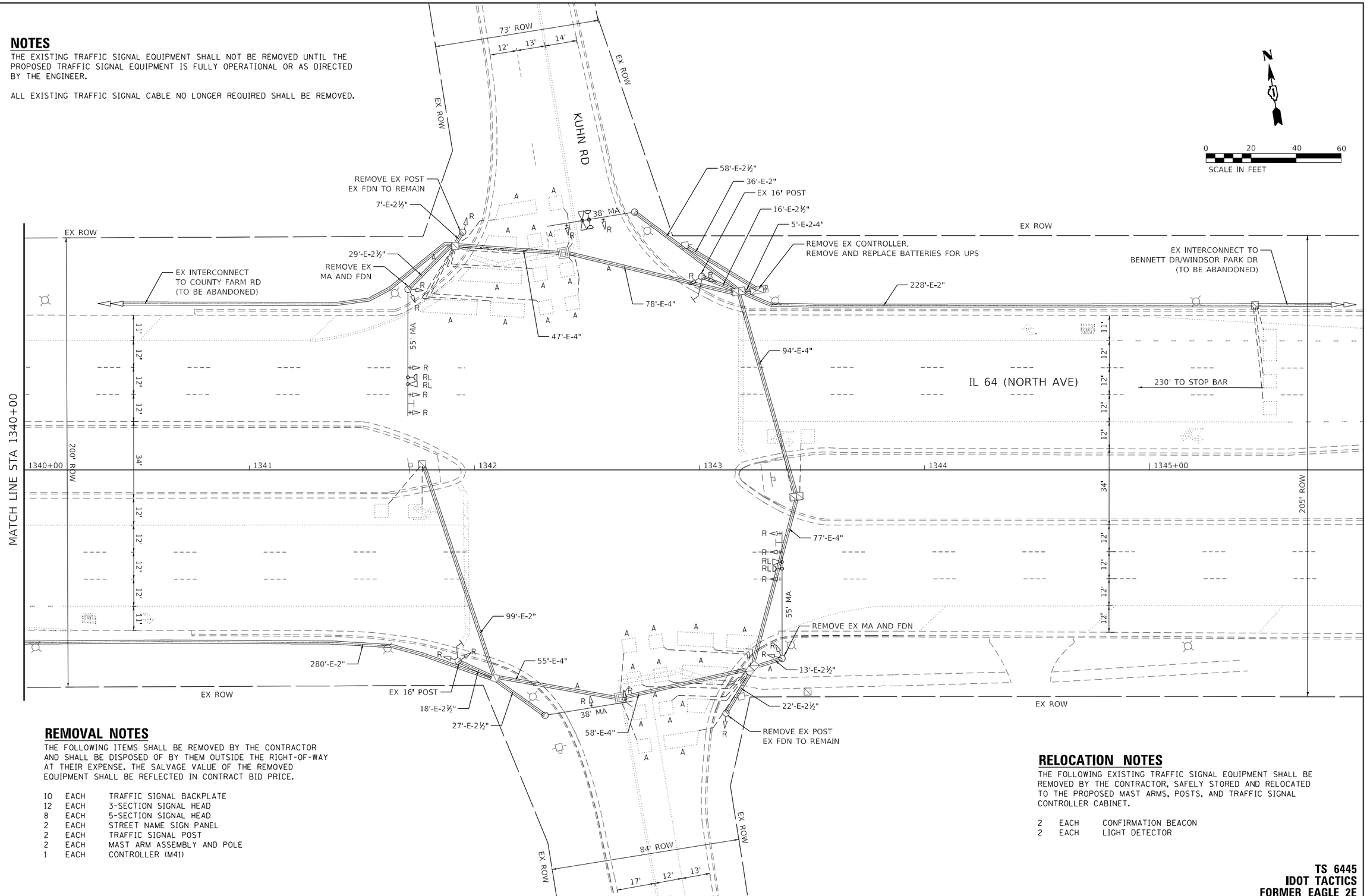

REMOVAL NOTES

THE FOLLOWING ITEMS SHALL BE REMOVED BY THE CONTRACTOR AND SHALL BE DISPOSED OF BY THEM OUTSIDE THE RIGHT-OF-WAY AT THEIR EXPENSE. THE SALVAGE VALUE OF THE REMOVED EQUIPMENT SHALL BE REFLECTED IN CONTRACT BID PRICE.

10	EACH	TRAFFIC SIGNAL BACKPLATE
12	EACH	3-SECTION SIGNAL HEAD
8	EACH	5-SECTION SIGNAL HEAD
2	EACH	STREET NAME SIGN PANEL
2	EACH	TRAFFIC SIGNAL POST
2	EACH	MAST ARM ASSEMBLY AND POLE
1	EACH	CONTROLLER (M41)

RELOCATION NOTES

THE FOLLOWING EXISTING TRAFFIC SIGNAL EQUIPMENT SHALL BE REMOVED BY THE CONTRACTOR, SAFELY STORED AND RELOCATED TO THE PROPOSED MAST ARMS, POSTS, AND TRAFFIC SIGNAL CONTROLLER CABINET.

2	EACH	CONFIRMATION BEACON
2	EACH	LIGHT DETECTOR

TS 6445
IDOT TACTICS
FORMER EAGLE 2E

MODEL: Default
FILE NAME: pw:\\jh-pw.bentley.com:jh-pw-01\Active Projects\MW-Cr-S-1639593100 - IL 64\Phase III\2 Design\CADd\Plan Sheets\Signal\West Corridor Signal\108121-sht-ts-57 KHA.dgn

Kimley»Horn
© 2022 KIMLEY-HORN AND ASSOCIATES, INC.
4201 WINFIELD ROAD, SUITE 600
WARRENVILLE, IL 60555
PHONE: 630-487-5550
WWW.KIMLEY-HORN.COM

USER NAME =	DESIGNED -	REVISED -
	DRAWN -	REVISED -
PLOT SCALE =	CHECKED -	REVISED -
PLOT DATE =	DATE -	REVISED -

STATE OF ILLINOIS
DEPARTMENT OF TRANSPORTATION

TRAFFIC SIGNAL EQUIPMENT REMOVAL PLAN
IL 64 (NORTH AVE) AND KUHN RD

SCALE: 1" = 20' | SHEET OF SHEETS | STA. TO STA.

F.A.P. RTE.	SECTION	COUNTY	TOTAL SHEETS	SHEET NO.
307	2020-263-SUR,SW&TS	DUPAGE	529	158
		CONTRACT NO. 62N33		
		ILLINOIS	FED. AID PROJECT	

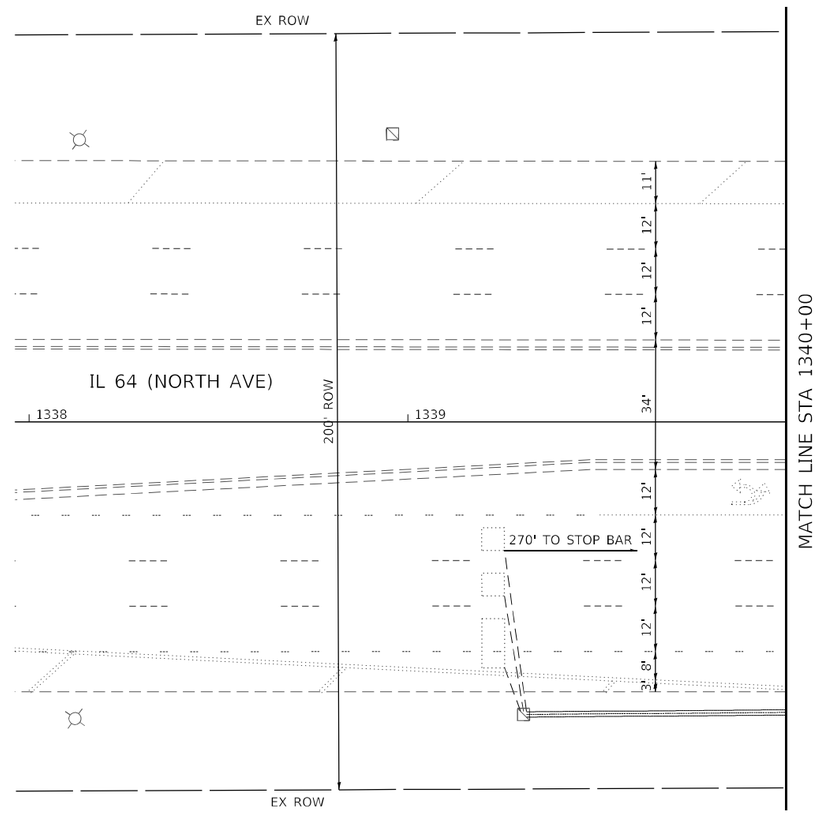

N

0 20 40 60
SCALE IN FEET

TS 6445
IDOT TACTICS
FORMER EAGLE 2E

MODEL: Default
FILE NAME: pw:\\h-pw.bentley.com:h-pw-01\Documents\01 Active Projects\MW-C-S-168959100 - IL 64\Phase III\2 Design\CADD\Plan Sheets\Signal\West Corridor Signal\D108121-sht4-s58_KHA.dgn

Kimley»Horn
© 2023 KIMLEY-HORN AND ASSOCIATES, INC.
4201 WINFIELD ROAD, SUITE 603
WARRENVILLE, IL 60555
PHONE: 630-487-5550
WWW.KIMLEY-HORN.COM

USER NAME =	DESIGNED -	REVISED -	
	DRAWN -	REVISED -	
PLOT SCALE =	CHECKED -	REVISED -	
PLOT DATE =	DATE -	REVISED -	

STATE OF ILLINOIS
DEPARTMENT OF TRANSPORTATION

TRAFFIC SIGNAL EQUIPMENT REMOVAL PLAN
IL 64 (NORTH AVE) AND KUHN RD

SCALE: 1" = 20' | SHEET OF SHEETS | STA. TO STA.

F.A.P. RTE.	SECTION	COUNTY	TOTAL SHEETS	SHEET NO.
307	2020-263-SUR,SW&TS	DUPAGE	529	159
		CONTRACT NO. 62N33		
	ILLINOIS	FED. AID PROJECT		

NOTES

1. ALL PROPOSED TRAFFIC SIGNAL CABLE SHALL BE ROUTED THROUGH THE PROPOSED CONDUIT.
2. A SEPARATE LEAD-IN CABLE SHALL BE INSTALLED FOR THE DETECTOR LOOPS ON IL 64 (NORTH AVE).
3. THERE SHALL BE A MINIMUM OF 4' SIDEWALK CLEARANCE IN FRONT/BEHIND OF THE TRAFFIC SIGNAL FOUNDATIONS TO BE ADA COMPLIANT.
4. THE SIDEWALK CURBS ON ALL QUADRANTS SHALL BE CUT SO THAT THE POST AND MAST ARM FOUNDATIONS ARE FLUSH WITH THE EDGE OF THE SIDEWALK.
5. ALL PUSH BUTTONS SHALL BE APS.
6. THIS LOCATION HAS BEEN DESIGNED TO BE ADA COMPLIANT. ANY DEVIATION FROM THIS PLAN FOR THE POSTS THAT HAVE PEDESTRIAN EQUIPMENT WILL HAVE TO BE APPROVED BY THE ENGINEER TO ENSURE ADA COMPLIANCE.

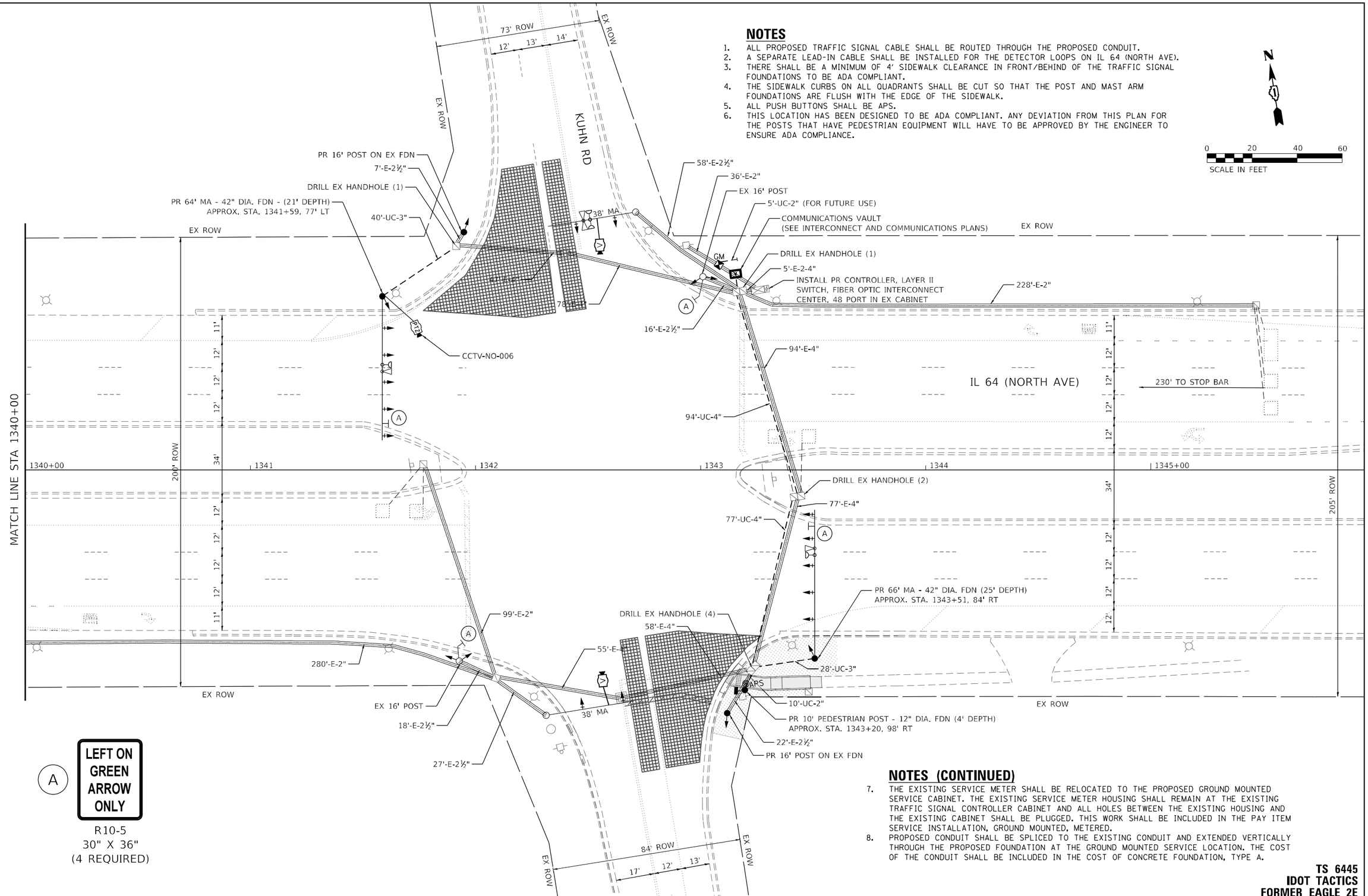

NOTES (CONTINUED)

7. THE EXISTING SERVICE METER SHALL BE RELOCATED TO THE PROPOSED GROUND MOUNTED SERVICE CABINET. THE EXISTING SERVICE METER HOUSING SHALL REMAIN AT THE EXISTING TRAFFIC SIGNAL CONTROLLER CABINET AND ALL HOLES BETWEEN THE EXISTING HOUSING AND THE EXISTING CABINET SHALL BE PLUGGED. THIS WORK SHALL BE INCLUDED IN THE PAY ITEM SERVICE INSTALLATION, GROUND MOUNTED, METERED.
8. PROPOSED CONDUIT SHALL BE SPLICED TO THE EXISTING CONDUIT AND EXTENDED VERTICALLY THROUGH THE PROPOSED FOUNDATION AT THE GROUND MOUNTED SERVICE LOCATION. THE COST OF THE CONDUIT SHALL BE INCLUDED IN THE COST OF CONCRETE FOUNDATION, TYPE A.

TS 6445
IDOT TACTICS
FORMER EAGLE 2E

MODEL: Default
FILE NAME: pw:\\jh-pw.bentley.com:jh-pw-01\Documents\01 Active Projects\MW-Cr-S-1689593100 - IL 64\Phase III\2 Design\CADd\Plan Sheets\Signal\West Corridor Signal\108121-sht-ts-59 KHA.dgn

Kimley»Horn
© 2022 KIMLEY-HORN AND ASSOCIATES, INC.
4201 WINFIELD ROAD, SUITE 600
WARRENVILLE, IL 60555
PHONE: 630-487-5550
WWW.KIMLEY-HORN.COM

USER NAME =	DESIGNED -	REVISED -
	DRAWN -	REVISED -
PLOT SCALE =	CHECKED -	REVISED -
PLOT DATE =	DATE -	REVISED -

STATE OF ILLINOIS
DEPARTMENT OF TRANSPORTATION

TRAFFIC SIGNAL MODERNIZATION PLAN
IL 64 (NORTH AVE) AND KUHN RD

SCALE: 1" = 20' | SHEET OF SHEETS | STA. TO STA.

F.A.P. RTE.	SECTION	COUNTY	TOTAL SHEETS	SHEET NO.
307	2020-263-SUR,SW&TS	DUPAGE	529	160
		CONTRACT NO. 62N33		
		ILLINOIS	FED. AID PROJECT	

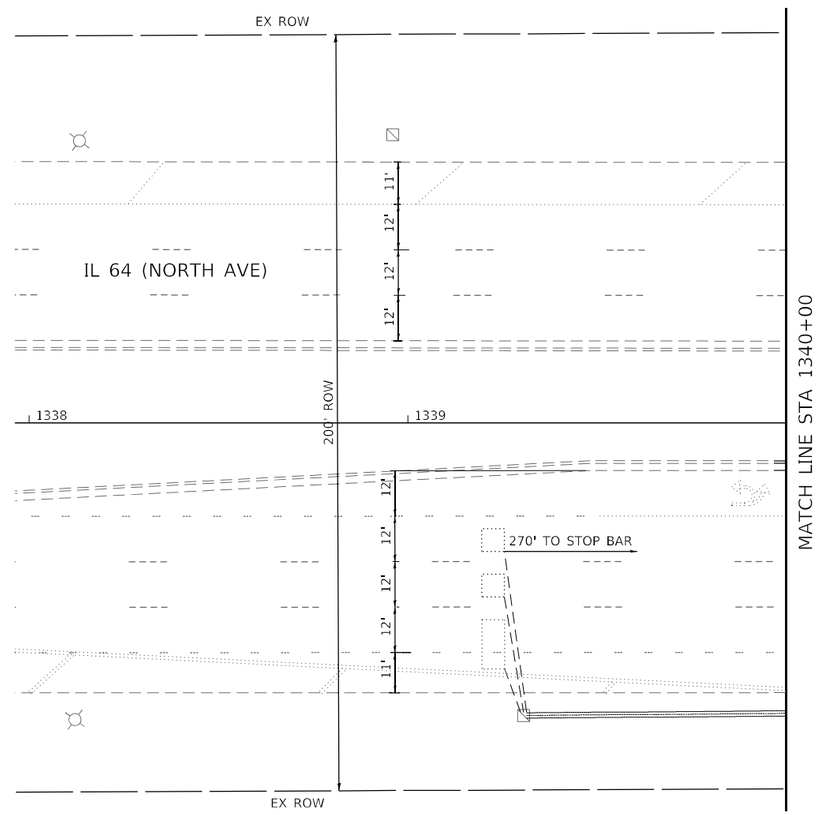

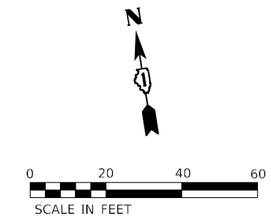

TS 6445
IDOT TACTICS
FORMER EAGLE 2E

MODEL: Default
FILE NAME: pw:\\h-pw.bentley.com:h-pw-01\Documents\01 Active Projects\MW-C-S-168959100 - IL 64\Phase III\2 Design\CADD\Plan Sheets\Signal\West Corridor Signal\01082121-sht4-s60_KHA.dgn

Kimley»Horn
© 2023 KIMLEY-HORN AND ASSOCIATES, INC.
4201 WINFIELD ROAD, SUITE 603
WARRENVILLE, IL 60555
PHONE: 630-487-5550
WWW.KIMLEY-HORN.COM

USER NAME =	DESIGNED -	REVISED -
	DRAWN -	REVISED -
PLOT SCALE =	CHECKED -	REVISED -
PLOT DATE =	DATE -	REVISED -

STATE OF ILLINOIS
DEPARTMENT OF TRANSPORTATION

TRAFFIC SIGNAL MODERNIZATION PLAN
IL 64 (NORTH AVE) AND KUHN RD

SCALE: 1" = 20' | SHEET OF SHEETS | STA. TO STA.

F.A.P. RTE.	SECTION	COUNTY	TOTAL SHEETS	SHEET NO.
307	2020-263-SUR,SW&TS	DUPAGE	529	161
		CONTRACT NO. 62N33		
	ILLINOIS	FED. AID PROJECT		

EXISTING CONTROLLER SEQUENCE

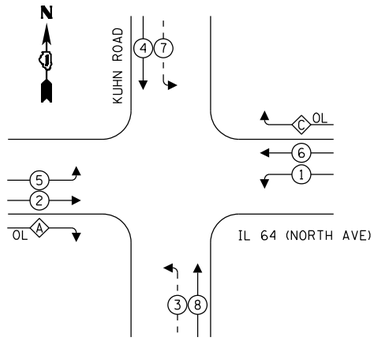

PROPOSED CONTROLLER SEQUENCE

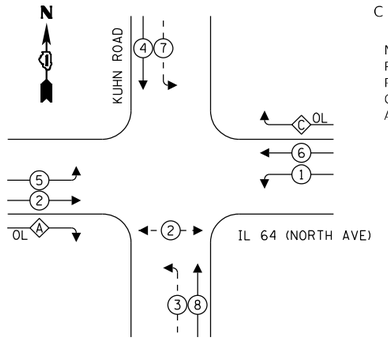

OVERLAP LETTER		PERMISSIVE PHASE		PROTECTED PHASE
A	=	2	+	3
C	=	6	+	7

NOTE: THE CONTROLLER SHALL BE PROGRAMMED WITH A PEDESTRIAN PROTECT THAT OMITS RIGHT TURN OVERLAP 'A' WHEN A PUSH BUTTON IS ACTIVATED FOR PEDESTRIAN PHASE 2.

EXISTING AND PROPOSED EMERGENCY VEHICLE PREEMPTION SEQUENCE

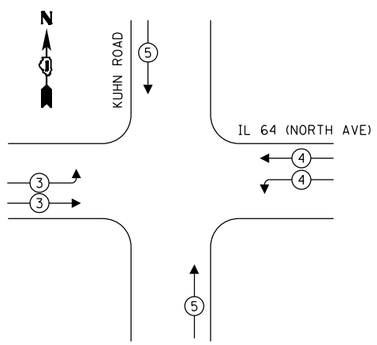

LEGEND:

- PROTECTED PHASE
- PROTECTED/PERMITTED PHASE
- PEDESTRIAN PHASE
- OL — OVERLAP

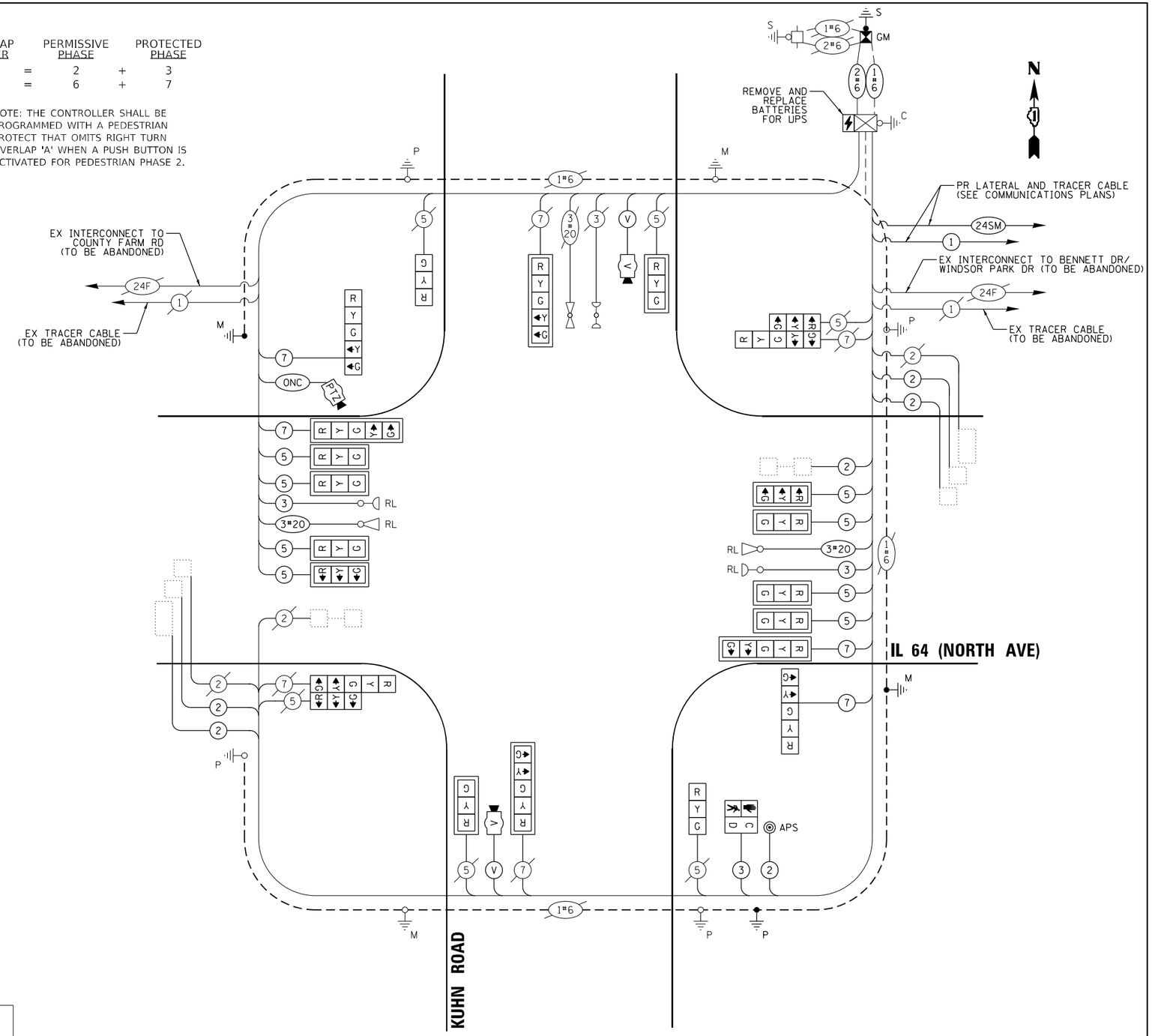

CABLE PLAN

(NOT TO SCALE)

TRAFFIC SIGNAL ELECTRICAL SERVICE REQUIREMENTS

TYPE	QUANTITY	UNIT WATTAGE	TOTAL WATTAGE
SIGNAL HEAD 1 OR 3-SECTION	14	11	154
4-SECTION	-	14	-
5-SECTION	8	13	104
PROGRAMMABLE 3-SECTION	-	22	-
4-SECTION	-	32	-
5-SECTION	-	28	-
PEDESTRIAN SIGNAL	2	15	30
CONTROLLER	1	150	150
MASTER CONTROLLER	-	100	-
UPS	1	25	25
DETECTION VIDEO	2	20	40
BLANK-OUT SIGN	-	25	-
NETWORK SWITCH LAYER II OR III	1	35	35
CELLULAR MODEM	-	15	-
PTZ	1	75	75
TOTAL UPS SIZING			613
UPS CHARGING	1	225	225
BATTERY HEATER MAT	1	180	180
CABINET HEATER	1	200	200
FLASHER	-	15	-
LED STREET NAME SIGN	-	120	-
LUMINAIRE	-	240	-
TOTAL SERVICE WIRE SIZING			1218

ENERGY COSTS TO:
ILLINOIS DEPARTMENT OF TRANSPORTATION
201 W CENTER CT
SCHAUMBURG, IL 60196

ENERGY SUPPLY: COMPANY: COMED
PHONE: (866) 639-3532
ACCOUNT NUMBER: 29291-26065

TS 6445
IDOT TACTICS
FORMER EAGLE 2E

MODEL: Default
FILE NAME: pw:\\khi-pw.bentley.com:khi-pw01\Documents\01 Active Projects\MW-CHS-168959100 - IL 64\Phase II\2 Design\CAD\Plan Sheets\Signal\West Corridor Signal\D1010821-sht4-61_KHA.dgn

Kimley»Horn
© 2022 KIMLEY-HORN AND ASSOCIATES, INC.
4201 WINFIELD ROAD, SUITE 600
WARRENVILLE, IL 60555
PHONE: 630-487-5550
WWW.KIMLEY-HORN.COM

USER NAME =	DESIGNED -	REVISED -
	DRAWN -	REVISED -
PLOT SCALE =	CHECKED -	REVISED -
PLOT DATE =	DATE -	REVISED -

STATE OF ILLINOIS
DEPARTMENT OF TRANSPORTATION

CABLE PLAN, PHASE DESIGNATION DIAGRAM, AND EMERGENCY VEHICLE PREEMPTION SEQUENCE
IL 64 (NORTH AVE) AND KUHN RD

SCALE: N.T.S. | SHEET OF SHEETS | STA. TO STA.

F.A.P. RTE.	SECTION	COUNTY	TOTAL SHEETS	SHEET NO.
307	2020-263-SUR,SW&TS	DUPAGE	529	162
		CONTRACT NO. 62N33		
		ILLINOIS	FED. AID PROJECT	

SIGN PANEL – TYPE 1 OR TYPE 2

ALL DIMENSIONS ARE IN INCHES UNLESS OTHERWISE NOTED

DESIGN SERIES	AREA (SQ FT)	SIGN PANEL TYPE	SHEETING TYPE	QTY. REQUIRED
D	12.5	2	ZZ	2

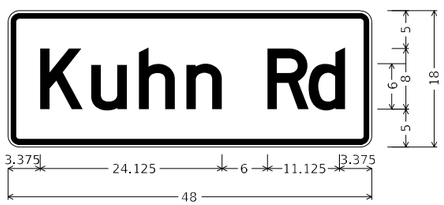

DESIGN SERIES	AREA (SQ FT)	SIGN PANEL TYPE	SHEETING TYPE	QTY. REQUIRED
D	6	1	ZZ	2

SCHEDULE OF QUANTITIES

	ITEM DESCRIPTION	UNIT	QUANTITY
	SIGN PANEL - TYPE 1	SQ FT	57
	SIGN PANEL - TYPE 2	SQ FT	25
	UNDERGROUND CONDUIT, GALVANIZED STEEL, 2" DIA.	FOOT	15
	UNDERGROUND CONDUIT, GALVANIZED STEEL, 3" DIA.	FOOT	68
	UNDERGROUND CONDUIT, GALVANIZED STEEL, 4" DIA.	FOOT	171
	MAINTENANCE OF EXISTING TRAFFIC SIGNAL INSTALLATION	EACH	1
	ELECTRIC CABLE IN CONDUIT, SIGNAL NO. 14 2C	FOOT	251
	ELECTRIC CABLE IN CONDUIT, SIGNAL NO. 14 3C	FOOT	251
	ELECTRIC CABLE IN CONDUIT, SIGNAL NO. 14 5C	FOOT	2540
	ELECTRIC CABLE IN CONDUIT, SIGNAL NO. 14 7C	FOOT	1270
	ELECTRIC CABLE IN CONDUIT, LEAD-IN, NO. 14 1 PAIR	FOOT	1488
	ELECTRIC CABLE IN CONDUIT, SERVICE, NO. 6 2 C	FOOT	36
	ELECTRIC CABLE IN CONDUIT, EQUIPMENT GROUNDING CONDUCTOR, NO. 6 1C	FOOT	275
	TRAFFIC SIGNAL POST, GALVANIZED STEEL 16 FT.	EACH	2
	STEEL COMBINATION MAST ARM ASSEMBLY AND POLE 64 FT.	EACH	1
	STEEL COMBINATION MAST ARM ASSEMBLY AND POLE 66 FT.	EACH	1
	CONCRETE FOUNDATION, TYPE A	FOOT	4
	CONCRETE FOUNDATION, TYPE E 42-INCH DIAMETER	FOOT	46
	DRILL EXISTING HANDHOLE	EACH	8
	SIGNAL HEAD, LED, 1-FACE, 3-SECTION, MAST-ARM MOUNTED	EACH	10
	SIGNAL HEAD, LED, 1-FACE, 3-SECTION, BRACKET MOUNTED	EACH	4
	SIGNAL HEAD, LED, 1-FACE, 5-SECTION, BRACKET MOUNTED	EACH	4
	SIGNAL HEAD, LED, 1-FACE, 5-SECTION, MAST-ARM MOUNTED	EACH	4
	PEDESTRIAN SIGNAL HEAD, LED, 1-FACE, BRACKET MOUNTED WITH COUNTDOWN TIMER	EACH	1
	TRAFFIC SIGNAL BACKPLATE, LOUVERED, FORMED PLASTIC	EACH	14
	INDUCTIVE LOOP DETECTOR	EACH	5
*	RELOCATE EXISTING EMERGENCY VEHICLE PRIORITY SYSTEM, DETECTOR UNIT	EACH	2
	REMOVE ELECTRIC CABLE FROM CONDUIT	FOOT	6111
	REMOVE EXISTING TRAFFIC SIGNAL EQUIPMENT	EACH	1
	REMOVE EXISTING CONCRETE FOUNDATION	EACH	2
	CLOSED CIRCUIT TELEVISION DOME CAMERA, HD	EACH	1
*	EMERGENCY VEHICLE PRIORITY SYSTEM LINE SENSOR CABLE, NO. 20 3/C	FOOT	635
	OUTDOOR RATED NETWORK CABLE	FOOT	293
	SERVICE INSTALLATION, GROUND MOUNTED, METERED	EACH	1
	REMOTE CONTROLLED VIDEO SYSTEM	EACH	1
	LAYER II (DATALINK) SWITCH	EACH	1
	TERMINATE FIBER IN CABINET	EACH	12
	PEDESTRIAN SIGNAL POST, 10 FT.	EACH	1
	TACTICS LICENSE EXPANSION	EACH	1
	FULL-ACTUATED CONTROLLER IN EXISTING CABINET	EACH	1
	REMOVE AND REPLACE BATTERIES FOR UNINTERUPTABLE POWER SUPPLY, EXTENDED	EACH	1
	FIBER OPTIC INTERCONNECT CENTER, 48 PORT	EACH	1
	ACCESSIBLE PEDESTRIAN SIGNALS	EACH	1
	CONCRETE FOUNDATION, TYPE A 12-INCH DIAMETER	FOOT	4
	LED SIGNAL FACE, LENS COVER	EACH	22
	VIDEO VEHICLE DETECTION SYSTEM, SINGLE APPROACH	EACH	2
	CAMERA MOUNTING ASSEMBLY	EACH	1

* - 100% COST TO THE VILLAGE OF CAROL STREAM

TS 6445
IDOT TACTICS
FORMER EAGLE 2E

MODEL: Default
FILE NAME: pw:\\kh-pw.bentley.com:ch-pw-01\Documents\01 Active Projects\MVCH-S-1689591\00 - IL 64\Phase III\2 Design\CAD\Plan Sheets\Sign-4\West Corridor Sign-4\D108121-sht4-s62_KHA.dgn

Kimley»Horn
© 2020 KIMLEY-HORN AND ASSOCIATES, INC.
4201 WINFIELD ROAD, SUITE 600
WARRENVILLE, IL 60555
PHONE: 630-487-5550
WWW.KIMLEY-HORN.COM

USER NAME =	DESIGNED -	REVISED -
	DRAWN -	REVISED -
PLOT SCALE =	CHECKED -	REVISED -
PLOT DATE =	DATE -	REVISED -

STATE OF ILLINOIS
DEPARTMENT OF TRANSPORTATION

MAST ARM MOUNTED STREET NAME SIGNS AND SCHEDULE OF QUANTITIES
IL 64 (NORTH AVE) AND KUHN RD

SCALE: N.T.S. | SHEET OF SHEETS | STA. TO STA.

F.A.P. RTE.	SECTION	COUNTY	TOTAL SHEETS	SHEET NO.
307	2020-263-SUR,SW&TS	DUPAGE	529	163
		CONTRACT NO. 62N33		
	ILLINOIS	FED. AID PROJECT		

NOTES

1. THE EXISTING TRAFFIC SIGNAL EQUIPMENT SHALL NOT BE REMOVED UNTIL THE PROPOSED TRAFFIC SIGNAL EQUIPMENT IS FULLY OPERATIONAL OR AS DIRECTED BY THE ENGINEER.
2. ALL EXISTING TRAFFIC SIGNAL CABLE NO LONGER REQUIRED SHALL BE REMOVED.

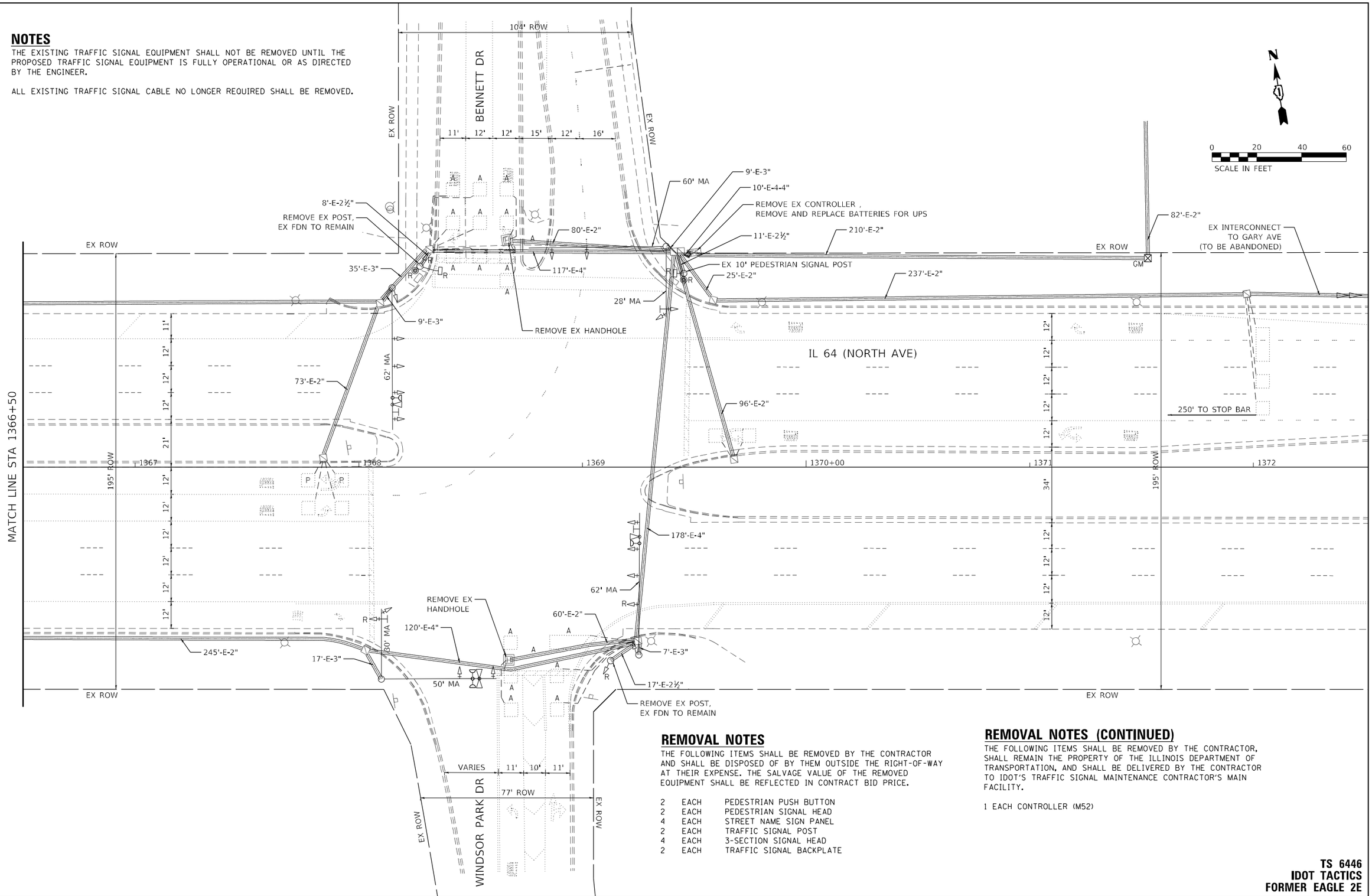

REMOVAL NOTES

THE FOLLOWING ITEMS SHALL BE REMOVED BY THE CONTRACTOR AND SHALL BE DISPOSED OF BY THEM OUTSIDE THE RIGHT-OF-WAY AT THEIR EXPENSE. THE SALVAGE VALUE OF THE REMOVED EQUIPMENT SHALL BE REFLECTED IN CONTRACT BID PRICE.

2	EACH	PEDESTRIAN PUSH BUTTON
2	EACH	PEDESTRIAN SIGNAL HEAD
4	EACH	STREET NAME SIGN PANEL
2	EACH	TRAFFIC SIGNAL POST
4	EACH	3-SECTION SIGNAL HEAD
2	EACH	TRAFFIC SIGNAL BACKPLATE

REMOVAL NOTES (CONTINUED)

THE FOLLOWING ITEMS SHALL BE REMOVED BY THE CONTRACTOR, SHALL REMAIN THE PROPERTY OF THE ILLINOIS DEPARTMENT OF TRANSPORTATION, AND SHALL BE DELIVERED BY THE CONTRACTOR TO IDOT'S TRAFFIC SIGNAL MAINTENANCE CONTRACTOR'S MAIN FACILITY.

1 EACH CONTROLLER (M52)

TS 6446
IDOT TACTICS
FORMER EAGLE 2E

MODEL: Default
FILE NAME: pw:\\jk-pw.bentley.com:ch-pw-01\Documents\01 Active Projects\MW-Cr-S-1689910 - IL 64\Phase III 2 Design\CADD\Plan Sheets\Signal\West Corridor Signal\D108121-sht4-of-63 KHA.dgn

Kimley»Horn
© 2023 KIMLEY-HORN AND ASSOCIATES, INC.
4201 WINFIELD ROAD, SUITE 600
WARRENVILLE, IL 60555
PHONE: 630-487-5550
WWW.KIMLEY-HORN.COM

USER NAME =	DESIGNED -	REVISED -
	DRAWN -	REVISED -
PLOT SCALE =	CHECKED -	REVISED -
PLOT DATE =	DATE -	REVISED -

STATE OF ILLINOIS
DEPARTMENT OF TRANSPORTATION

TRAFFIC SIGNAL EQUIPMENT REMOVAL PLAN
IL 64 (NORTH AVE) AND BENNETT DR/ WINDSOR PARK DR

SCALE: 1" = 20' | SHEET OF SHEETS | STA. TO STA.

F.A.P. RTE.	SECTION	COUNTY	TOTAL SHEETS	SHEET NO.
307	2020-263-SUR,SW&TS	DUPAGE	529	164
		CONTRACT NO. 62N33		
	ILLINOIS	FED. AID PROJECT		

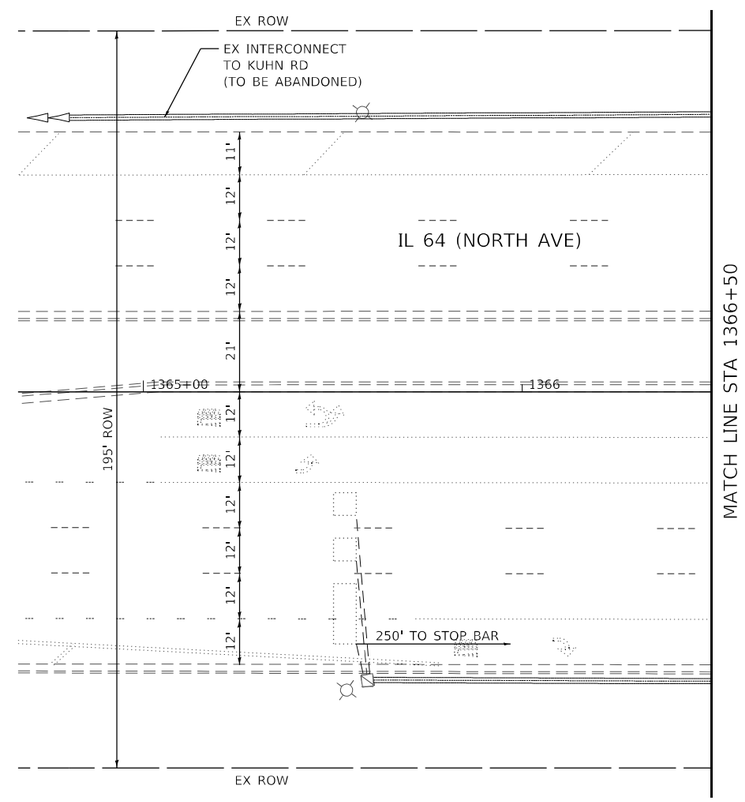

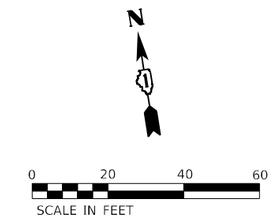

TS 6446
IDOT TACTICS
FORMER EAGLE 2E

MODEL: Default
FILE NAME: pw:\\lh-pw.bentley.com:lh-pw-01\Documents\01 Active Projects\MVCH-168959100 - IL 64\Phase III Design\CAD\Plan Sheets\Signal\West Corridor Signal\D108121-sht1-64 KHA.dgn

Kimley»Horn
© 2022 KIMLEY-HORN AND ASSOCIATES, INC.
4201 WINFIELD ROAD, SUITE 600
WARRENVILLE, IL 60555
PHONE: 630-487-5550
WWW.KIMLEY-HORN.COM

USER NAME =	DESIGNED -	REVISED -
	DRAWN -	REVISED -
PLOT SCALE =	CHECKED -	REVISED -
PLOT DATE =	DATE -	REVISED -

STATE OF ILLINOIS
DEPARTMENT OF TRANSPORTATION

TRAFFIC SIGNAL EQUIPMENT REMOVAL PLAN
IL 64 (NORTH AVE) AND BENNETT DR / WINDSOR PARK DR

SCALE: 1" = 20' | SHEET OF SHEETS | STA. TO STA.

F.A.P. RTE.	SECTION	COUNTY	TOTAL SHEETS	SHEET NO.
307	2020-263-SUR,SW&TS	DUPAGE	529	165
		CONTRACT NO. 62N33		
		ILLINOIS	FED. AID PROJECT	

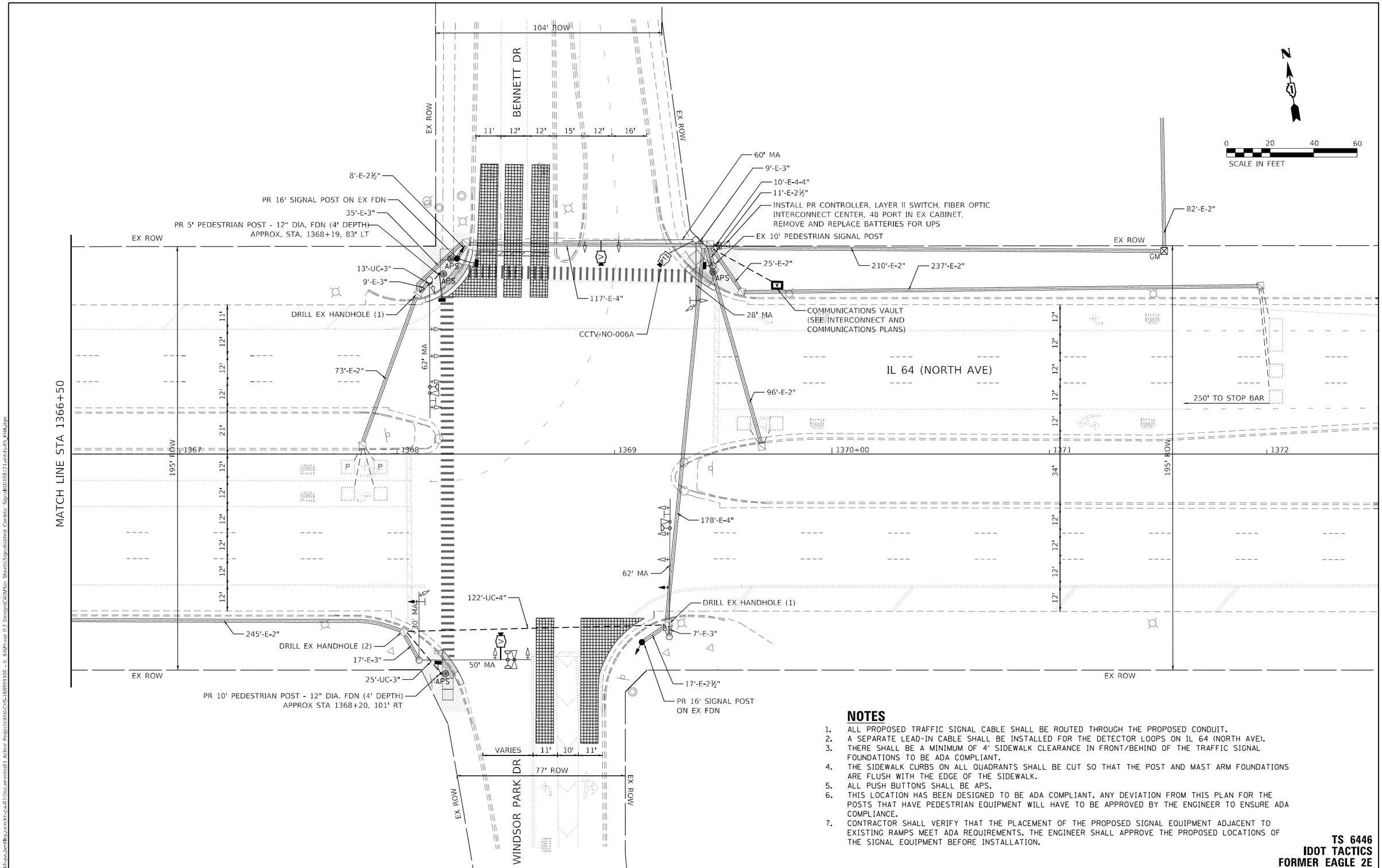

NOTES

1. ALL PROPOSED TRAFFIC SIGNAL CABLE SHALL BE ROUTED THROUGH THE PROPOSED CONDUIT.
2. A SEPARATE LEAD-IN CABLE SHALL BE INSTALLED FOR THE DETECTOR LOOPS ON IL 64 (NORTH AVE).
3. THERE SHALL BE A MINIMUM OF 4' SIDEWALK CLEARANCE IN FRONT/BEHIND OF THE TRAFFIC SIGNAL FOUNDATIONS TO BE ADA COMPLIANT.
4. THE SIDEWALK CURBS ON ALL QUADRANTS SHALL BE CUT SO THAT THE POST AND MAST ARM FOUNDATIONS ARE FLUSH WITH THE EDGE OF THE SIDEWALK.
5. ALL PUSH BUTTONS SHALL BE APS.
6. THIS LOCATION HAS BEEN DESIGNED TO BE ADA COMPLIANT. ANY DEVIATION FROM THIS PLAN FOR THE POSTS THAT HAVE PEDESTRIAN EQUIPMENT WILL HAVE TO BE APPROVED BY THE ENGINEER TO ENSURE ADA COMPLIANCE.
7. CONTRACTOR SHALL VERIFY THAT THE PLACEMENT OF THE PROPOSED SIGNAL EQUIPMENT ADJACENT TO EXISTING RAMPS MEET ADA REQUIREMENTS. THE ENGINEER SHALL APPROVE THE PROPOSED LOCATIONS OF THE SIGNAL EQUIPMENT BEFORE INSTALLATION.

TS 6446
IDOT TACTICS
FORMER EAGLE 2E

MODEL: Default
FILE NAME: pw:\\kh-pw.bentley.com:kh-pw-01\Documents\01 Active Projects\MW-CHS-1689591\06 - IL 64\Phase II\2 Design\CADD\Plan Sheets\Signals\West Corridor Signals\D108121-sht4-of-65_KHA.dgn

Kimley»Horn
© 2023 KIMLEY-HORN AND ASSOCIATES, INC.
4201 WINFIELD ROAD, SUITE 600
WARRENVILLE, IL 60555
PHONE: 630-487-5550
WWW.KIMLEY-HORN.COM

USER NAME =	DESIGNED -	REVISED -	
	DRAWN -	REVISED -	
PLOT SCALE =	CHECKED -	REVISED -	
PLOT DATE =	DATE -	REVISED -	

STATE OF ILLINOIS
DEPARTMENT OF TRANSPORTATION

TRAFFIC SIGNAL MODERNIZATION PLAN
IL 64 (NORTH AVE) AND BENNETT DR / WINDSOR PARK DR

SCALE: 1" = 20' | SHEET OF SHEETS | STA. TO STA.

F.A.P. RTE.	SECTION	COUNTY	TOTAL SHEETS	SHEET NO.
307	2020-263-SUR,SW&TS	DUPAGE	529	166
		CONTRACT NO. 62N33		
	ILLINOIS	FED. AID PROJECT		

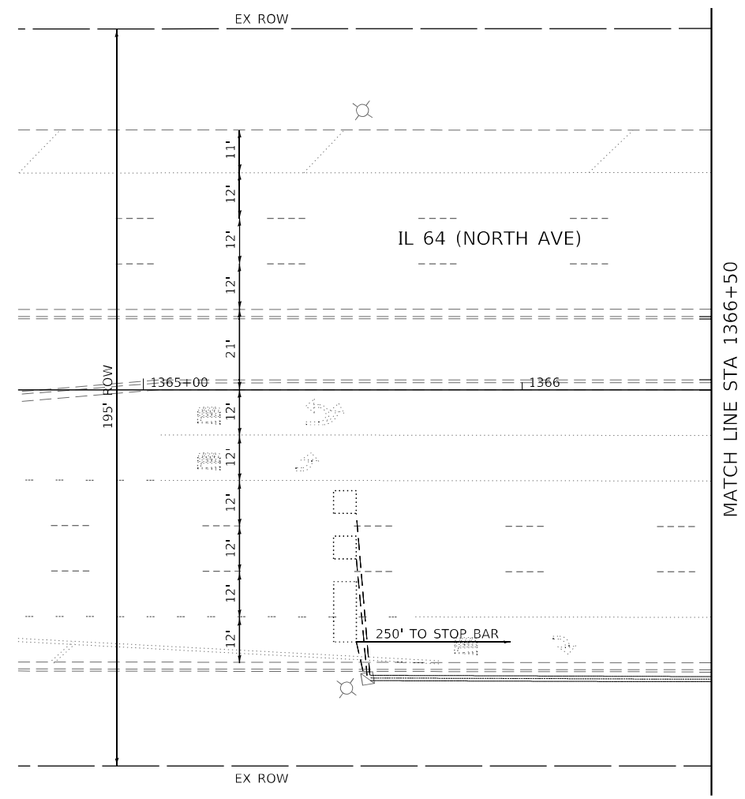

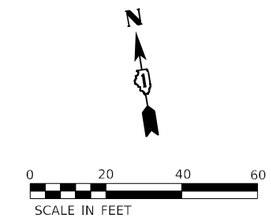

TS 6446
IDOT TACTICS
FORMER EAGLE 2E

MODEL: Default
FILE NAME: pw:\\khpw.bentley.com:khpw01\Documents\01 Active Projects\HW-CHS-168959100 - IL 64\Phase III\2 Design\CAD\Plan Sheets\Signal\West Corridor Signal\D108121-sht4-s66_KHA.dgn

Kimley»Horn
© 2022 KIMLEY-HORN AND ASSOCIATES, INC.
4201 WINFIELD ROAD, SUITE 600
WARRENVILLE, IL 60555
PHONE: 630-487-5550
WWW.KIMLEY-HORN.COM

USER NAME =	DESIGNED -	REVISED -
	DRAWN -	REVISED -
PLOT SCALE =	CHECKED -	REVISED -
PLOT DATE =	DATE -	REVISED -

STATE OF ILLINOIS
DEPARTMENT OF TRANSPORTATION

TRAFFIC SIGNAL MODERNIZATION PLAN
IL 64 (NORTH AVE) AND BENNETT DR/ WINDSOR PARK DR

SCALE: 1" = 20' | SHEET OF SHEETS | STA. TO STA.

F.A.P. RTE.	SECTION	COUNTY	TOTAL SHEETS	SHEET NO.
307	2020-263-SUR,SW&TS	DUPAGE	529	167
		CONTRACT NO. 62N33		
	ILLINOIS	FED. AID PROJECT		

EXISTING CONTROLLER SEQUENCE

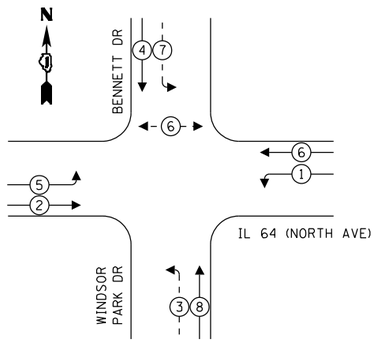

PROPOSED CONTROLLER SEQUENCE

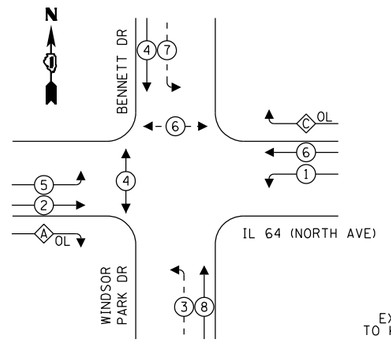

EXISTING AND PROPOSED EMERGENCY VEHICLE PREEMPTION SEQUENCE

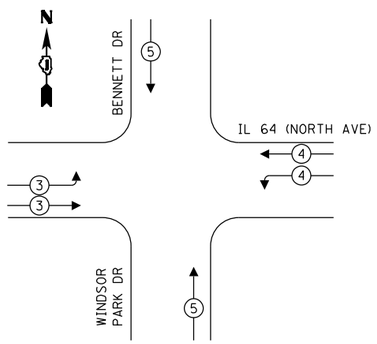

LEGEND:

- PROTECTED PHASE
- PROTECTED/PERMITTED PHASE
- PEDESTRIAN PHASE
- OL — OVERLAP

OVERLAP LETTER		PERMISSIVE PHASE		PROTECTED PHASE
C	=	6	+	7
A	=	2	+	3

TRAFFIC SIGNAL ELECTRICAL SERVICE REQUIREMENTS

TYPE	QUANTITY	UNIT WATTAGE	TOTAL WATTAGE
SIGNAL HEAD 1 OR 3-SECTION	12	11	132
4-SECTION	-	14	-
5-SECTION	8	13	104
PROGRAMMABLE 3-SECTION	-	22	-
4-SECTION	-	32	-
5-SECTION	-	28	-
PEDESTRIAN SIGNAL	4	15	60
CONTROLLER	1	150	150
MASTER CONTROLLER	-	100	-
UPS	1	25	25
DETECTION VIDEO	2	20	40
BLANK-OUT SIGN	-	25	-
NETWORK SWITCH LAYER II OR III	1	35	35
CELLULAR MODEM	-	15	-
PTZ	1	75	75
TOTAL UPS SIZING			621
UPS CHARGING	1	225	225
BATTERY HEATER MAT	1	180	180
CABINET HEATER	1	200	200
FLASHER	-	15	-
LED STREET NAME SIGN	-	120	-
LUMINAIRE	-	240	-
TOTAL SERVICE WIRE SIZING			1226

ENERGY COSTS TO:
ILLINOIS DEPARTMENT OF TRANSPORTATION
201 W CENTER CT
SCHAUMBURG, IL 60196

ENERGY SUPPLY: COMPANY: COMED
PHONE: (866) 639-3532
ACCOUNT NUMBER: 29291-26065

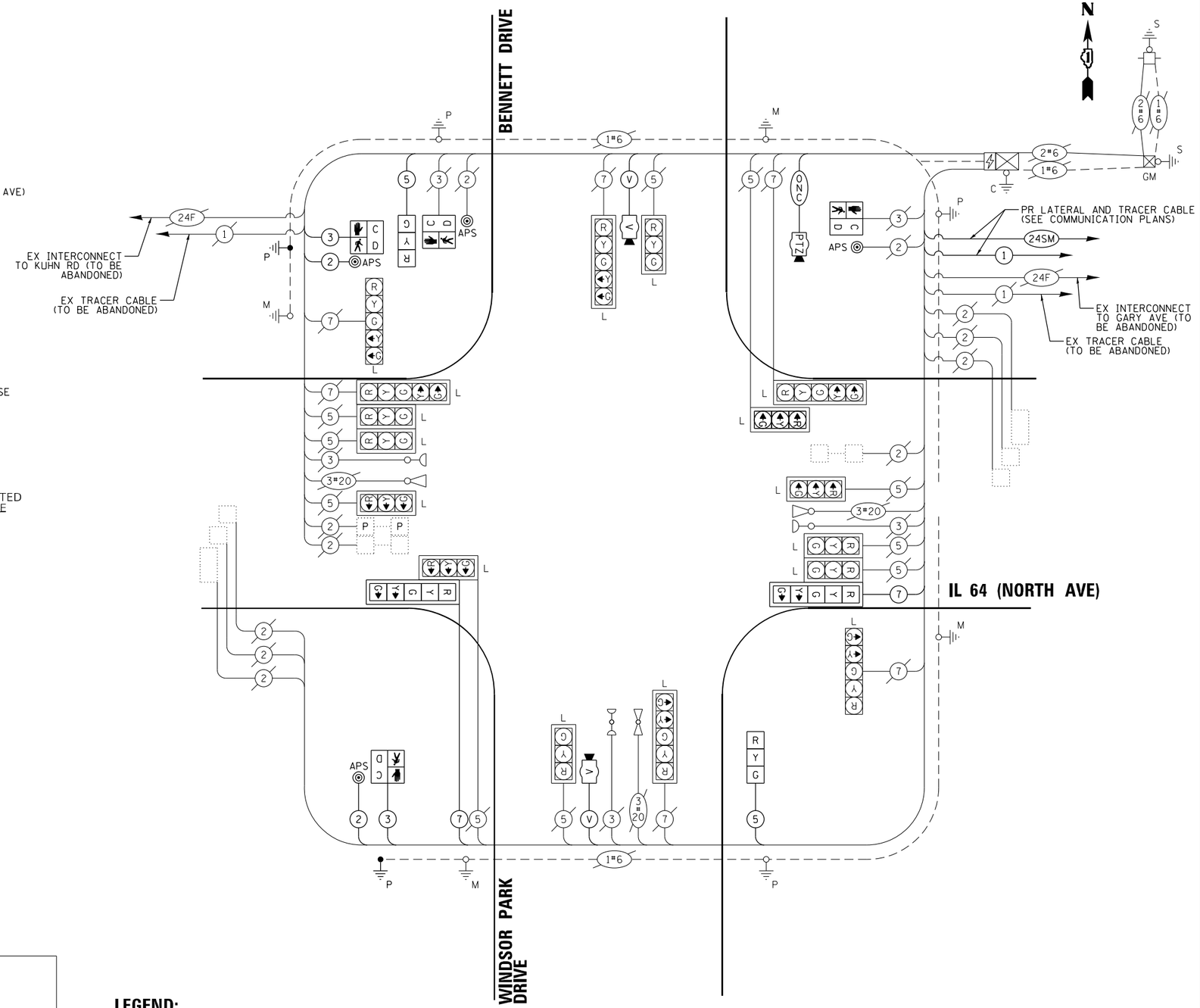

LEGEND:

L = LED LAMP MODULE REPLACEMENT

CABLE PLAN

(NOT TO SCALE)

TS 6446
IDOT TACTICS
FORMER EAGLE 2E

Kimley»Horn
© 2022 KIMLEY-HORN AND ASSOCIATES, INC.
4201 WINFIELD ROAD, SUITE 600
WARRENVILLE, IL 60555
PHONE: 630-487-5550
WWW.KIMLEY-HORN.COM

USER NAME =	DESIGNED -	REVISED -	
	DRAWN -	REVISED -	
PLOT SCALE =	CHECKED -	REVISED -	
PLOT DATE =	DATE -	REVISED -	

STATE OF ILLINOIS
DEPARTMENT OF TRANSPORTATION

CABLE PLAN, PHASE DESIGNATION DIAGRAM, AND EMERGENCY VEHICLE PREEMPTION SEQUENCE
IL 64 (NORTH AVE) AND BENNETT DR/WINDSOR PARK DR

SCALE: N.T.S. | SHEET OF SHEETS | STA. TO STA.

F.A.P. RTE.	SECTION	COUNTY	TOTAL SHEETS	SHEET NO.
307	2020-263-SUR,SW&TS	DUPAGE	529	168
		CONTRACT NO. 62N33		
		ILLINOIS FED. AID PROJECT		

MODEL: Default
FILE NAME: pw:\\khpw.bentley.com:khpw01\Documents\01 Active Projects\MV-CHS-168959100 - IL 64\Phase II\2 Design\CAD\Plan Sheets\Signal\IL64West Corridor Signal\D108121-sht4-s67_KHA.dgn

SIGN PANEL – TYPE 2

ALL DIMENSIONS ARE IN INCHES UNLESS OTHERWISE NOTED

DESIGN SERIES	AREA (SQ FT)	SIGN PANEL TYPE	SHEETING TYPE	QTY. REQUIRED
D	12.5	2	ZZ	2

DESIGN SERIES	AREA (SQ FT)	SIGN PANEL TYPE	SHEETING TYPE	QTY. REQUIRED
C	20	2	ZZ	1

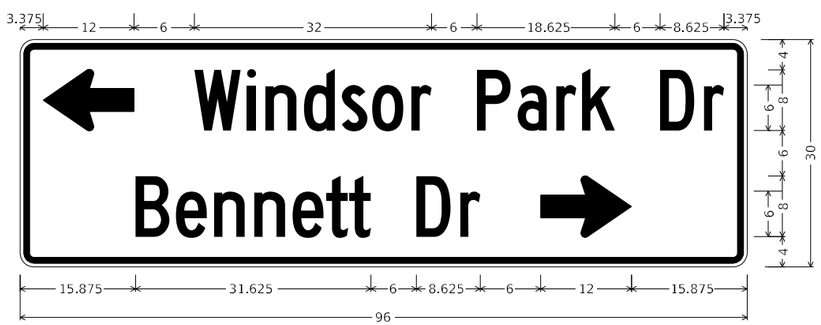

DESIGN SERIES	AREA (SQ FT)	SIGN PANEL TYPE	SHEETING TYPE	QTY. REQUIRED
C	20	2	ZZ	1

SCHEDULE OF QUANTITIES

ITEM DESCRIPTION	UNIT	QUANTITY
SIGN PANEL - TYPE 2	SQ FT	65
UNDERGROUND CONDUIT, GALVANIZED STEEL, 3" DIA.	FOOT	38
UNDERGROUND CONDUIT, GALVANIZED STEEL, 4" DIA.	FOOT	122
MAINTENANCE OF EXISTING TRAFFIC SIGNAL INSTALLATION	EACH	1
ELECTRIC CABLE IN CONDUIT, SIGNAL NO. 14 2C	FOOT	581
ELECTRIC CABLE IN CONDUIT, SIGNAL NO. 14 3C	FOOT	581
ELECTRIC CABLE IN CONDUIT, SIGNAL NO. 14 7C	FOOT	417
ELECTRIC CABLE IN CONDUIT, EQUIPMENT GROUNDING CONDUCTOR, NO. 6 1C	FOOT	160
TRAFFIC SIGNAL POST, GALVANIZED STEEL 16 FT.	EACH	2
DRILL EXISTING HANDHOLE	EACH	4
SIGNAL HEAD, LED, 1-FACE, 3-SECTION, BRACKET MOUNTED	EACH	2
SIGNAL HEAD, LED, 1-FACE, 5-SECTION, MAST-ARM MOUNTED	EACH	2
PEDESTRIAN SIGNAL HEAD, LED, 1-FACE, BRACKET MOUNTED WITH COUNTDOWN TIMER	EACH	4
TRAFFIC SIGNAL BACKPLATE, LOUVERED, FORMED PLASTIC	EACH	2
REMOVE ELECTRIC CABLE FROM CONDUIT	FOOT	1739
REMOVE EXISTING TRAFFIC SIGNAL EQUIPMENT	EACH	1
REMOVE EXISTING HANDHOLE	EACH	2
CLOSED CIRCUIT TELEVISION DOME CAMERA, HD	EACH	1
OUTDOOR RATED NETWORK CABLE	FOOT	94
REMOTE CONTROLLED VIDEO SYSTEM	EACH	1
LAYER II (DATALINK) SWITCH	EACH	1
TERMINATE FIBER IN CABINET	EACH	12
PEDESTRIAN SIGNAL POST, 10 FT.	EACH	1
PEDESTRIAN SIGNAL POST, 5 FT.	EACH	1
TACTICS LICENSE EXPANSION	EACH	1
FULL-ACTUATED CONTROLLER IN EXISTING CABINET	EACH	1
REMOVE AND REPLACE BATTERIES FOR UNINTERUPTABLE POWER SUPPLY, EXTENDED	EACH	1
FIBER OPTIC INTERCONNECT CENTER, 48 PORT	EACH	1
ACCESSIBLE PEDESTRIAN SIGNALS	EACH	4
CONCRETE FOUNDATION, TYPE A 12-INCH DIAMETER	FOOT	8
LED SIGNAL MODULE REPLACMENT	EACH	60
LED SIGNAL FACE, LENS COVER	EACH	20
VIDEO VEHICLE DETECTION SYSTEM, SINGLE APPROACH	EACH	2
CAMERA MOUNTING ASSEMBLY	EACH	1

TS 6446
IDOT TACTICS
FORMER EAGLE 2E

MODEL: Default
FILE NAME: pw:\\jb-pw.kimley.com:sh-pw-01\Documents\01 Active Projects\HW-Chi-S-168959100 - IL 64\Phase III 2 Design\CAD\Plan Sheets\Sign-Ill\West Corridor Signs\D108121-sht-s68_KHA.dgn

Kimley»Horn
© 2023 KIMLEY-HORN AND ASSOCIATES, INC.
4201 WINFIELD ROAD, SUITE 600
WARRENVILLE, IL 60555
PHONE: 630-487-5550
WWW.KIMLEY-HORN.COM

USER NAME =	DESIGNED -	REVISED -	
	DRAWN -	REVISED -	
PLOT SCALE =	CHECKED -	REVISED -	
PLOT DATE =	DATE -	REVISED -	

STATE OF ILLINOIS
DEPARTMENT OF TRANSPORTATION

SCHEDULE OF QUANTITIES
IL 64 (NORTH AVE) AND BENNETT DR/ WINDSOR PARK DR

SCALE: N.T.S. | SHEET OF SHEETS | STA. TO STA.

F.A.P. RTE.	SECTION	COUNTY	TOTAL SHEETS	SHEET NO.
307	2020-263-SUR,SW&TS	DUPAGE	529	169
		CONTRACT NO. 62N33		
		ILLINOIS FED. AID PROJECT		

NOTES

1. THE EXISTING TRAFFIC SIGNAL EQUIPMENT SHALL NOT BE REMOVED UNTIL THE PROPOSED TRAFFIC SIGNAL EQUIPMENT IS FULLY OPERATIONAL OR AS DIRECTED BY THE ENGINEER.
2. ALL EXISTING TRAFFIC SIGNAL CABLE NO LONGER REQUIRED SHALL BE REMOVED.

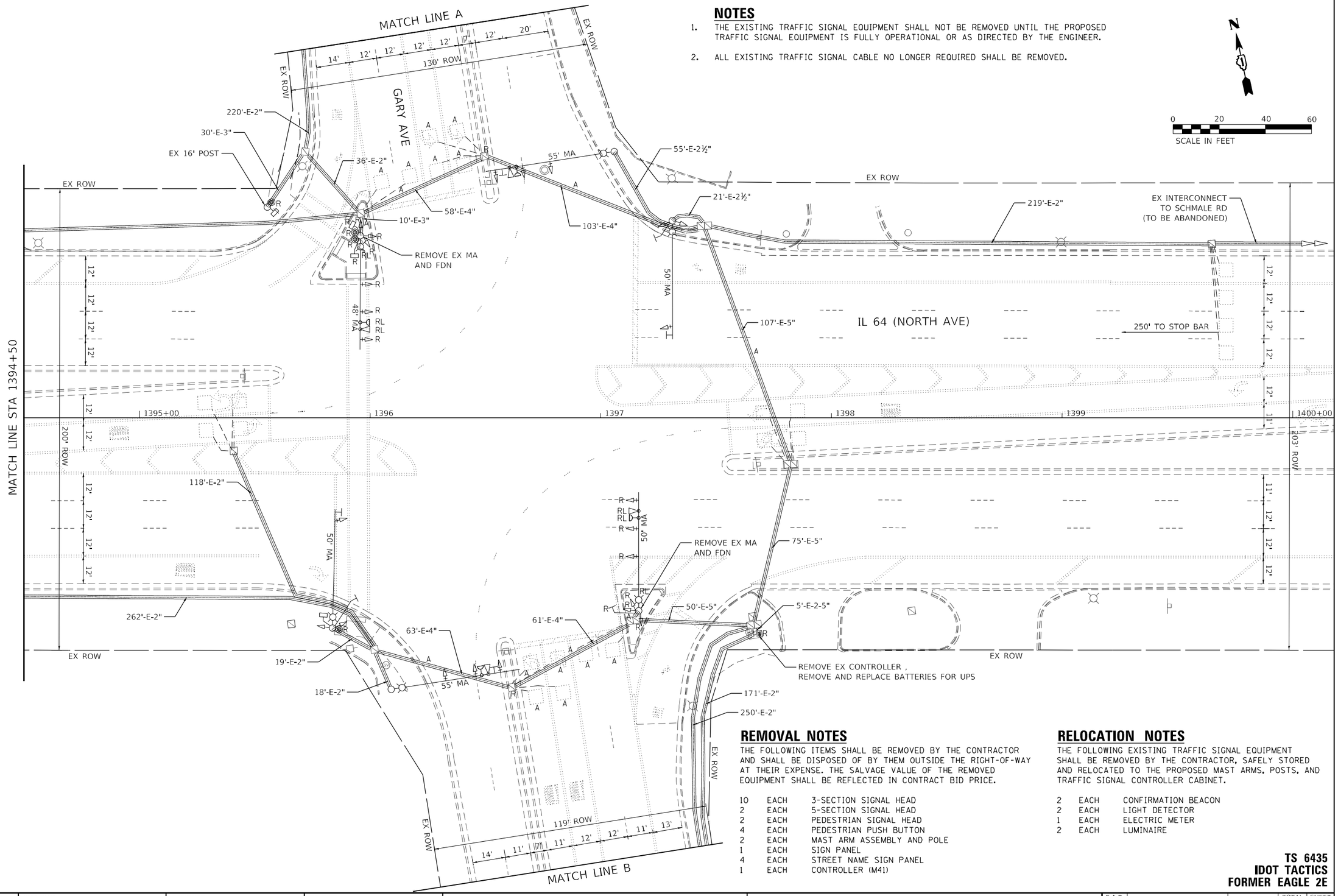

REMOVAL NOTES

THE FOLLOWING ITEMS SHALL BE REMOVED BY THE CONTRACTOR AND SHALL BE DISPOSED OF BY THEM OUTSIDE THE RIGHT-OF-WAY AT THEIR EXPENSE. THE SALVAGE VALUE OF THE REMOVED EQUIPMENT SHALL BE REFLECTED IN CONTRACT BID PRICE.

10	EACH	3-SECTION SIGNAL HEAD
2	EACH	5-SECTION SIGNAL HEAD
2	EACH	PEDESTRIAN SIGNAL HEAD
4	EACH	PEDESTRIAN PUSH BUTTON
2	EACH	MAST ARM ASSEMBLY AND POLE
1	EACH	SIGN PANEL
4	EACH	STREET NAME SIGN PANEL
1	EACH	CONTROLLER (M41)

RELOCATION NOTES

THE FOLLOWING EXISTING TRAFFIC SIGNAL EQUIPMENT SHALL BE REMOVED BY THE CONTRACTOR, SAFELY STORED AND RELOCATED TO THE PROPOSED MAST ARMS, POSTS, AND TRAFFIC SIGNAL CONTROLLER CABINET.

2	EACH	CONFIRMATION BEACON
2	EACH	LIGHT DETECTOR
1	EACH	ELECTRIC METER
2	EACH	LUMINAIRE

TS 6435
IDOT TACTICS
FORMER EAGLE 2E

MODEL: Default
FILE NAME: pw:\\jb-pw.kimley.com:kh-pw-01\Documents\01 Active Projects\HW-Ch5-168959100 - IL 64\Phase III 2 Design\CAD\Plan Sheets\Signal\West Corridor Signal\D108121-sht4-s69 KHA.dgn

Kimley»Horn
© 2023 KIMLEY-HORN AND ASSOCIATES, INC.
4201 WINFIELD ROAD, SUITE 600
WARRENVILLE, IL 60555
PHONE: 630-487-5550
WWW.KIMLEY-HORN.COM

USER NAME =	DESIGNED -	REVISED -	
	DRAWN -	REVISED -	
PLOT SCALE =	CHECKED -	REVISED -	
PLOT DATE =	DATE -	REVISED -	

STATE OF ILLINOIS
DEPARTMENT OF TRANSPORTATION

TRAFFIC SIGNAL EQUIPMENT REMOVAL PLAN
IL 64 (NORTH AVE) AND GARY AVE

SCALE: 1" = 20' | SHEET OF SHEETS | STA. TO STA.

F.A.P. RTE.	SECTION	COUNTY	TOTAL SHEETS	SHEET NO.
307	2020-263-SUR,SW&TS	DUPAGE	529	170
		CONTRACT NO. 62N33		
		ILLINOIS	FED. AID PROJECT	

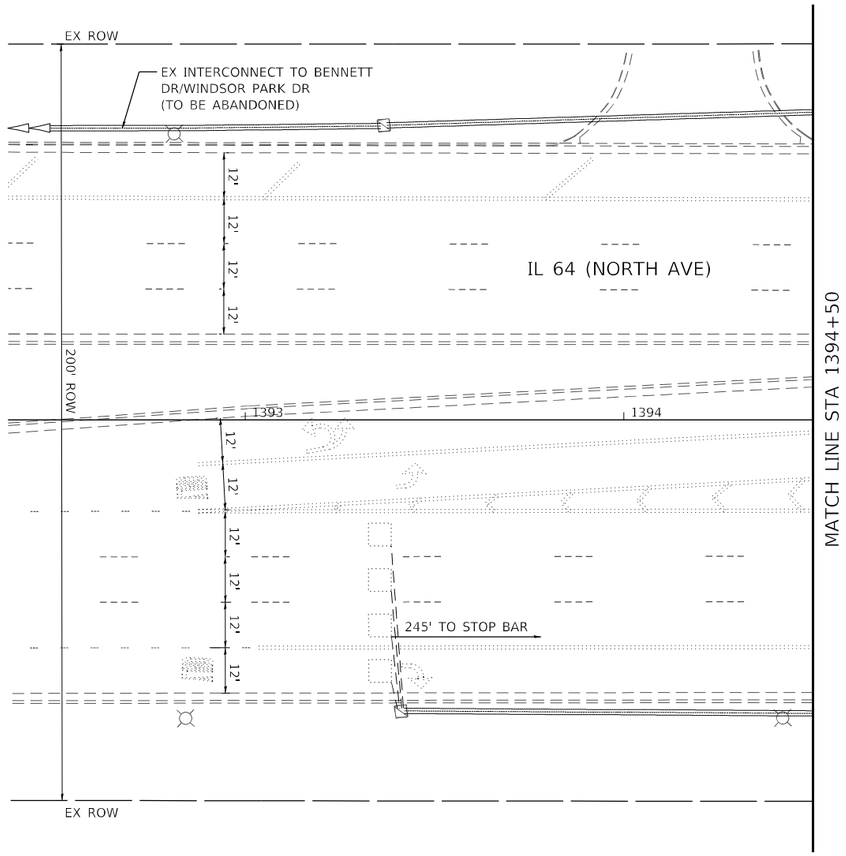

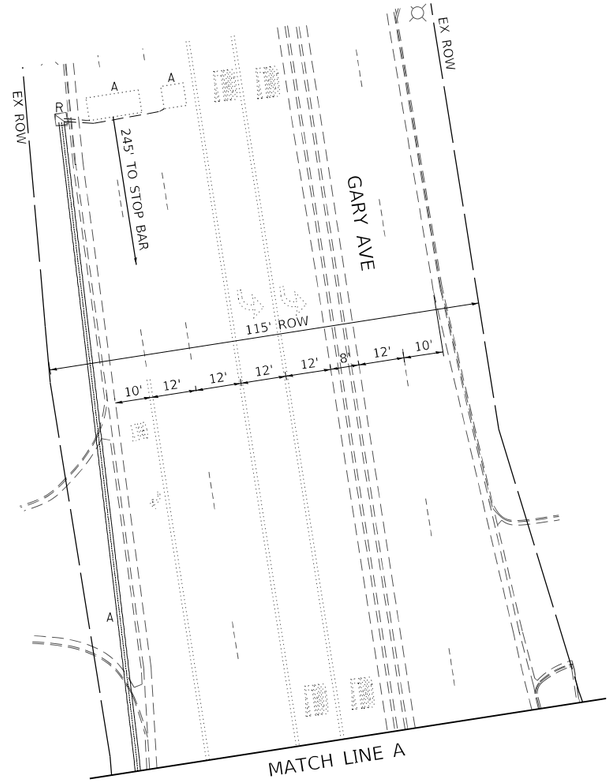

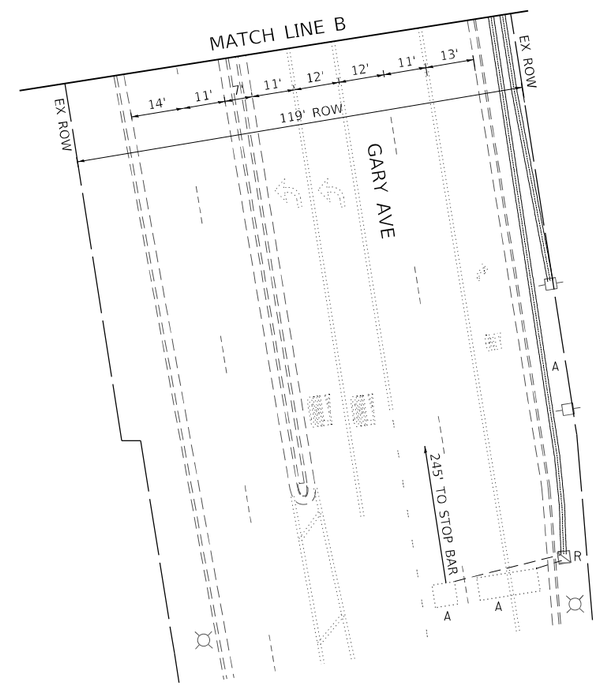

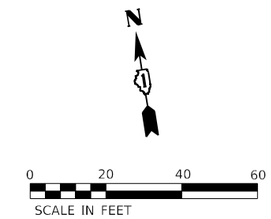

TS 6435
IDOT TACTICS
FORMER EAGLE 2E

MODEL: Default
FILE NAME: pw:\\ih-pw.kimley.com:ih-pw-01\Documents\01 Active Projects\HW-CHS-168959100 - IL 64\Phase II\2 Design\CAD\Plan Sheets\Signal\West Corridor Signal\D1081215-N14-270 KHA.dgn

Kimley»Horn
© 2023 KIMLEY-HORN AND ASSOCIATES, INC.
4201 WINFIELD ROAD, SUITE 600
WARRENVILLE, IL 60555
PHONE: 630-487-5550
WWW.KIMLEY-HORN.COM

USER NAME =	DESIGNED -	REVISED -
	DRAWN -	REVISED -
PLOT SCALE =	CHECKED -	REVISED -
PLOT DATE =	DATE -	REVISED -

STATE OF ILLINOIS
DEPARTMENT OF TRANSPORTATION

TRAFFIC SIGNAL EQUIPMENT REMOVAL PLAN
IL 64 (NORTH AVE) AND GARY AVE

SCALE: 1" = 20' | SHEET OF SHEETS | STA. TO STA.

F.A.P. RTE.	SECTION	COUNTY	TOTAL SHEETS	SHEET NO.
307	2020-263-SUR,SW&TS	DUPAGE	529	171
		CONTRACT NO. 62N33		
		ILLINOIS	FED. AID PROJECT	

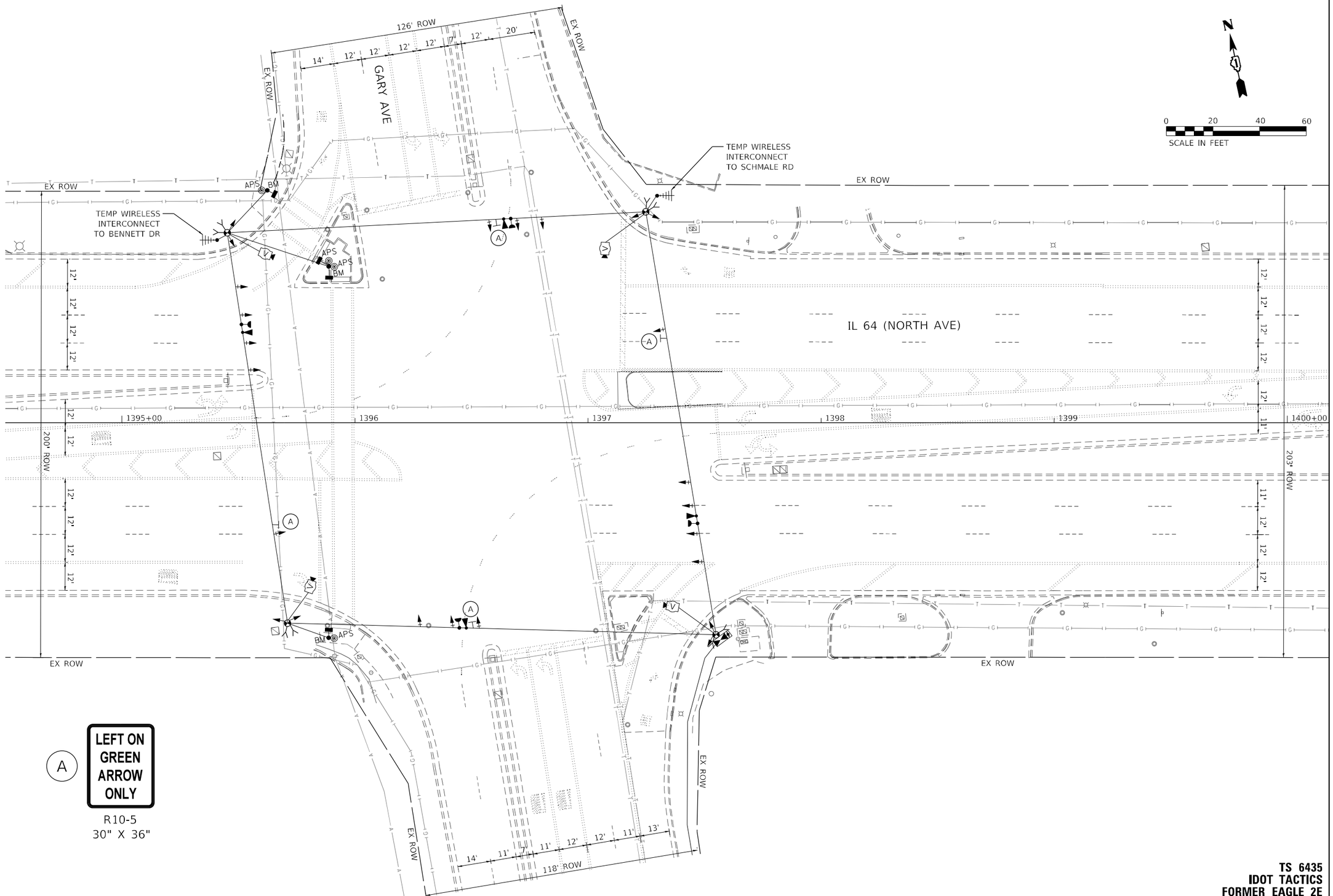

A

LEFT ON GREEN ARROW ONLY

R10-5
30" X 36"

TS 6435
IDOT TACTICS
FORMER EAGLE 2E

MODEL: Default
FILE NAME: pw:\\lh-pw.bentley.com:ch-pw-01\Documents\01 Active Projects\MW-Cr-S-L689591\00 - 1. 6s\Phase III.2 Design\CADD\Plan Sheets\Signal\D108121-sht4-71 KHA.dgn

Kimley»Horn
© 2023 KIMLEY-HORN AND ASSOCIATES, INC.
4201 WINFIELD ROAD, SUITE 600
WARRENVILLE, IL 60555
PHONE: 630-487-5550
WWW.KIMLEY-HORN.COM

USER NAME =	DESIGNED -	REVISED -
	DRAWN -	REVISED -
PLOT SCALE =	CHECKED -	REVISED -
PLOT DATE =	DATE -	REVISED -

STATE OF ILLINOIS
DEPARTMENT OF TRANSPORTATION

TRAFFIC SIGNAL EQUIPMENT TEMPORARY PLAN
IL 64 (NORTH AVE) AND GARY AVE

SCALE: 1" = 20' | SHEET OF SHEETS | STA. TO STA.

F.A.P. RTE.	SECTION	COUNTY	TOTAL SHEETS	SHEET NO.
307	2020-263-SUR,SW&TS	DUPAGE	529	172
		CONTRACT NO. 62N33		
	ILLINOIS	FED. AID PROJECT		

TEMPORARY CONTROLLER SEQUENCE

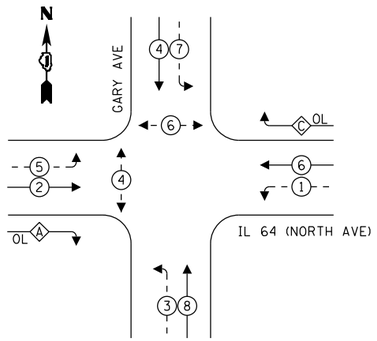

LEGEND:

- PROTECTED PHASE
- PROTECTED/PERMITTED PHASE
- PEDESTRIAN PHASE
- OL OVERLAP

OVERLAP LETTER		PERMISSIVE PHASE		PROTECTED PHASE
A	=	2	+	3
C	=	6	+	7

TEMPORARY EMERGENCY VEHICLE PREEMPTION SEQUENCE

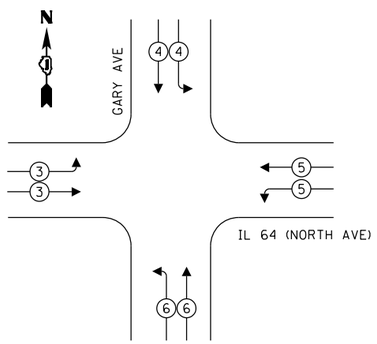

TRAFFIC SIGNAL ELECTRICAL SERVICE REQUIREMENTS

TYPE	QUANTITY	UNIT WATTAGE	TOTAL WATTAGE
SIGNAL HEAD 1 OR 3-SECTION	-	11	-
4-SECTION	-	14	-
5-SECTION	-	13	-
PROGRAMMABLE 3-SECTION	-	22	-
4-SECTION	-	32	-
5-SECTION	-	28	-
PEDESTRIAN SIGNAL	-	15	-
CONTROLLER	1	150	150
MASTER CONTROLLER	-	100	-
UPS	1	25	25
DETECTION VIDEO	-	20	-
BLANK-OUT SIGN	-	25	-
NETWORK SWITCH LAYER II OR III	1	35	35
CELLULAR MODEM	-	15	-
TOTAL UPS SIZING			210
UPS CHARGING	1	225	225
BATTERY HEATER MAT	1	180	180
CABINET HEATER	1	200	200
FLASHER	-	15	-
LED STREET NAME SIGN	-	120	-
LUMINAIRE	-	240	-
TOTAL SERVICE WIRE SIZING			815

NOTES

1. ONLY RED SIGNAL FACES SHALL HAVE A LENS COVER INSTALLED.

ENERGY COSTS TO:
ILLINOIS DEPARTMENT OF TRANSPORTATION
201 W CENTER CT
SCHAUMBURG, IL 60196

ENERGY SUPPLY: COMPANY: COMED
PHONE: (866) 639-3532
ACCOUNT NUMBER: 20051-18081

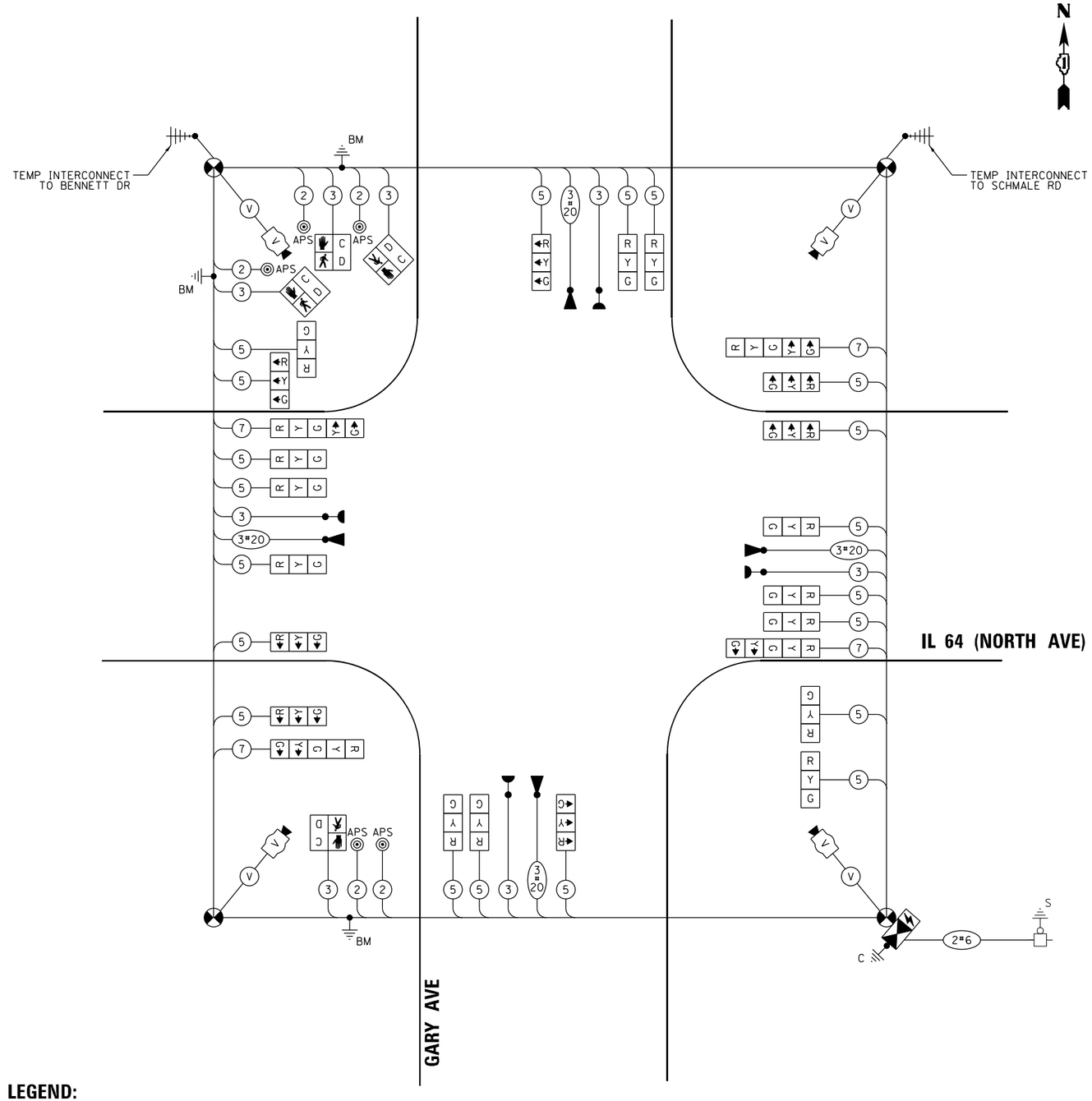

LEGEND:

L = LED LAMP MODULE REPLACEMENT
RL = RELOCATE
* = ROADWAY LIGHTING CABLE

CABLE PLAN

(NOT TO SCALE)

TS 6435
IDOT TACTICS
FORMER EAGLE 2E

Kimley»Horn
© 2023 KIMLEY-HORN AND ASSOCIATES, INC.
4201 WINFIELD ROAD, SUITE 600
WARRENVILLE, IL 60555
PHONE: 630-487-5550
WWW.KIMLEY-HORN.COM

USER NAME =	DESIGNED -	REVISED -	
	DRAWN -	REVISED -	
PLOT SCALE =	CHECKED -	REVISED -	
PLOT DATE =	DATE -	REVISED -	

STATE OF ILLINOIS
DEPARTMENT OF TRANSPORTATION

TEMPORARY CABLE PLAN, PHASE DESIGNATION DIAGRAM, AND EMERGENCY VEHICLE PREEMPTION SEQUENCE
IL 64 (NORTH AVE) AND GARY AVE

SCALE: N.T.S. | SHEET OF SHEETS | STA. TO STA.

F.A.P. RTE.	SECTION	COUNTY	TOTAL SHEETS	SHEET NO.
307	2020-263-SUR,SW&TS	DUPAGE	529	173
		CONTRACT NO. 62N33		
	ILLINOIS	FED. AID PROJECT		

MODEL: Default
FILE NAME: pw:\\h-pw.bentley.com:h-pw-01\Documents\01 Active Projects\MW-CHS-16959100 - IL 64\Phase III\2 Design\CADD\Plan Sheets\Signal\NWest Corridor Signal\08123-Int4-72 KHA.dgn

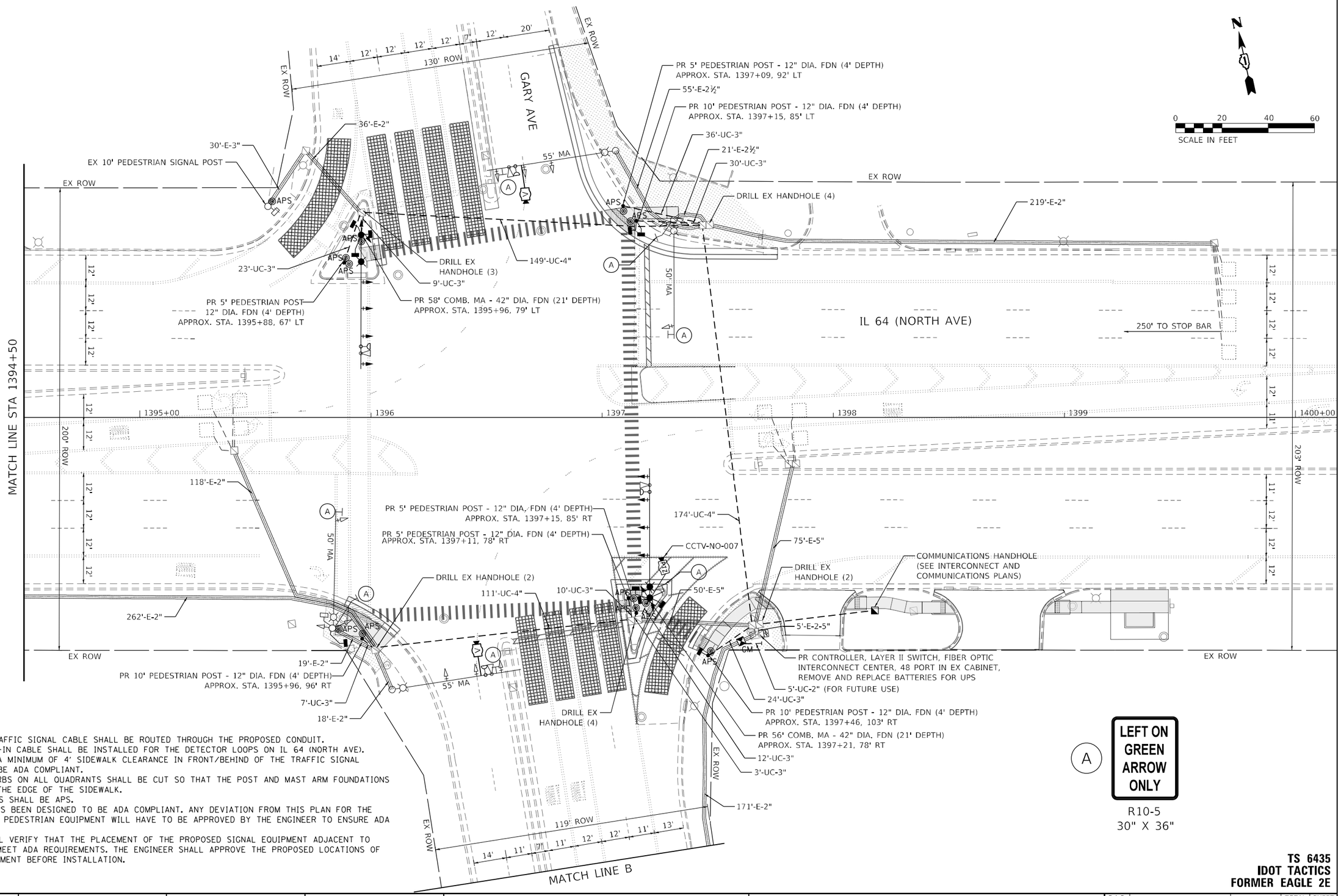

NOTES

1. ALL PROPOSED TRAFFIC SIGNAL CABLE SHALL BE ROUTED THROUGH THE PROPOSED CONDUIT.
2. A SEPARATE LEAD-IN CABLE SHALL BE INSTALLED FOR THE DETECTOR LOOPS ON IL 64 (NORTH AVE).
3. THERE SHALL BE A MINIMUM OF 4' SIDEWALK CLEARANCE IN FRONT/BEHIND OF THE TRAFFIC SIGNAL FOUNDATIONS TO BE ADA COMPLIANT.
4. THE SIDEWALK CURBS ON ALL QUADRANTS SHALL BE CUT SO THAT THE POST AND MAST ARM FOUNDATIONS ARE FLUSH WITH THE EDGE OF THE SIDEWALK.
5. ALL PUSH BUTTONS SHALL BE APS.
6. THIS LOCATION HAS BEEN DESIGNED TO BE ADA COMPLIANT. ANY DEVIATION FROM THIS PLAN FOR THE POSTS THAT HAVE PEDESTRIAN EQUIPMENT WILL HAVE TO BE APPROVED BY THE ENGINEER TO ENSURE ADA COMPLIANCE.
7. CONTRACTOR SHALL VERIFY THAT THE PLACEMENT OF THE PROPOSED SIGNAL EQUIPMENT ADJACENT TO EXISTING RAMPS MEET ADA REQUIREMENTS. THE ENGINEER SHALL APPROVE THE PROPOSED LOCATIONS OF THE SIGNAL EQUIPMENT BEFORE INSTALLATION.

TS 6435
IDOT TACTICS
FORMER EAGLE 2E

MODEL: Default
FILE NAME: pw:\\lh-pw.bentley.com:sh-pw-01\Documents\01 Active Projects\HWC-Cr-S-1689593100 - IL 64\Phase III\2 Design\CADD\Plan Sheets\Signal\West Corridor Signal\D108121-sht4-z73 KHA.dgn

Kimley»Horn
© 2023 KIMLEY-HORN AND ASSOCIATES, INC.
4201 WINFIELD ROAD, SUITE 600
WARRENVILLE, IL 60555
PHONE: 630-487-5550
WWW.KIMLEY-HORN.COM

USER NAME =	DESIGNED -	REVISED -
	DRAWN -	REVISED -
PLOT SCALE =	CHECKED -	REVISED -
PLOT DATE =	DATE -	REVISED -

STATE OF ILLINOIS
DEPARTMENT OF TRANSPORTATION

TRAFFIC SIGNAL MODERNIZATION PLAN
IL 64 (NORTH AVE) AND GARY AVE

SCALE: 1" = 20' | SHEET OF SHEETS | STA. TO STA.

F.A.P. RTE.	SECTION	COUNTY	TOTAL SHEETS	SHEET NO.
307	2020-263-SUR,SW&TS	DUPAGE	529	174
		CONTRACT NO. 62N33		
	ILLINOIS	FED. AID PROJECT		

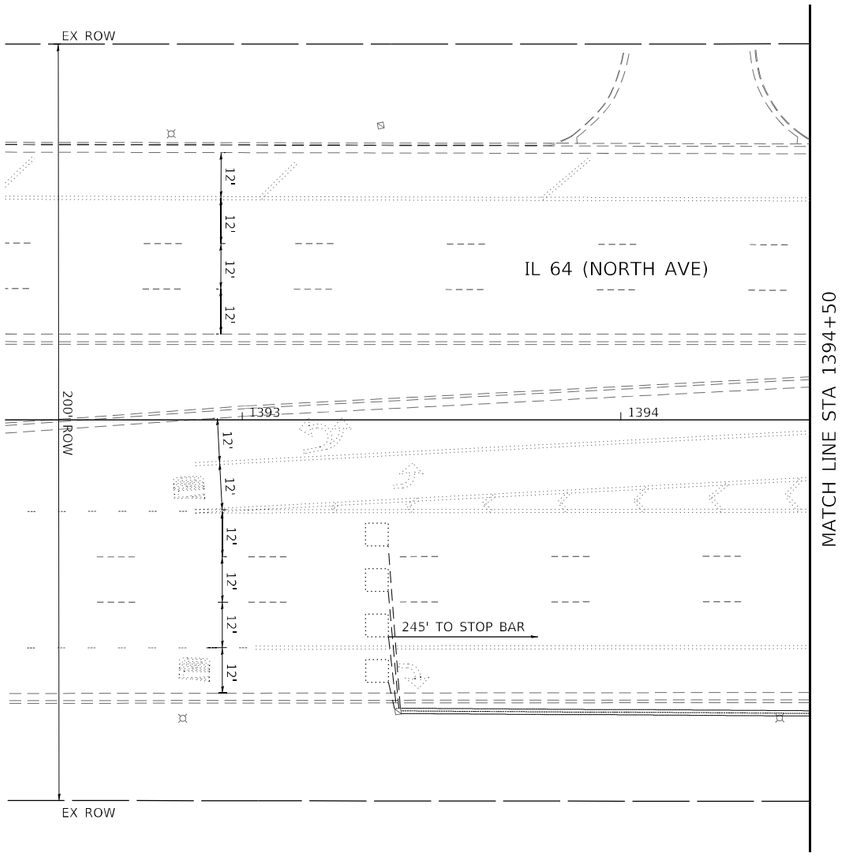

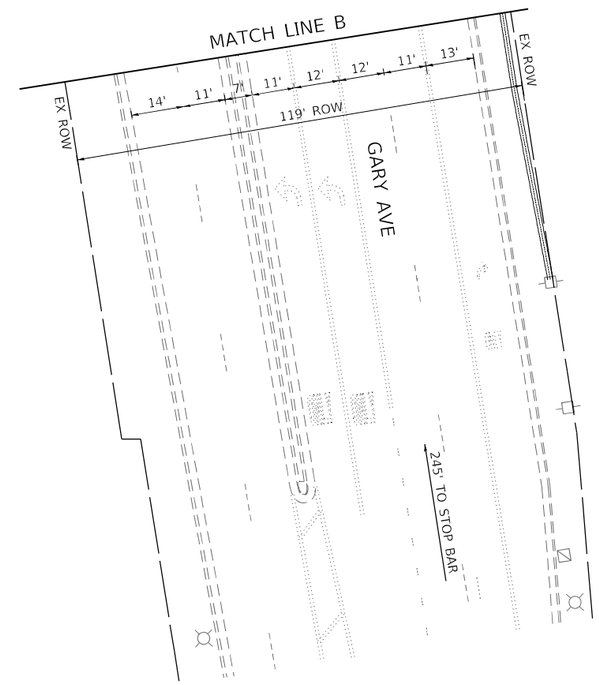

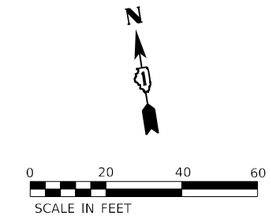

TS 6435
IDOT TACTICS
FORMER EAGLE 2E

MODEL: Default
FILE NAME: pw:\\jk-pw.bentley.com:ch-pw-01\Documents\01 Active Projects\MW-CI-S-L689591\00 - IL 64\Phase III.2 Design\CADD\Plan Sheets\Signal\West Corridor Signal\01081215-IL64-S-74_KHA.dgn

Kimley»Horn
© 2023 KIMLEY-HORN AND ASSOCIATES, INC.
4201 WINFIELD ROAD, SUITE 600
WARRENVILLE, IL 60555
PHONE: 630-487-5550
WWW.KIMLEY-HORN.COM

USER NAME =	DESIGNED -	REVISED -
	DRAWN -	REVISED -
PLOT SCALE =	CHECKED -	REVISED -
PLOT DATE =	DATE -	REVISED -

STATE OF ILLINOIS
DEPARTMENT OF TRANSPORTATION

TRAFFIC SIGNAL MODERNIZATION PLAN
IL 64 (NORTH AVE) AND GARY AVE

SCALE: 1" = 20' | SHEET OF SHEETS | STA. TO STA.

F.A.P. RTE.	SECTION	COUNTY	TOTAL SHEETS	SHEET NO.
307	2020-263-SUR,SW&TS	DUPAGE	529	175
		CONTRACT NO. 62N33		
	ILLINOIS	FED. AID PROJECT		

EXISTING AND PROPOSED CONTROLLER SEQUENCE

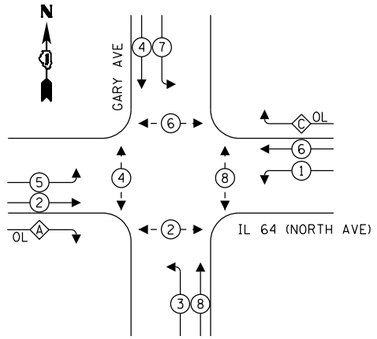

LEGEND:

PROTECTED PHASE

PROTECTED/PERMITTED PHASE

PEDESTRIAN PHASE

OL OVERLAP

OVERLAP LETTER		PERMISSIVE PHASE		PROTECTED PHASE
A	=	2	+	3
C	=	6	+	7

EXISTING AND PROPOSED EMERGENCY VEHICLE PREEMPTION SEQUENCE

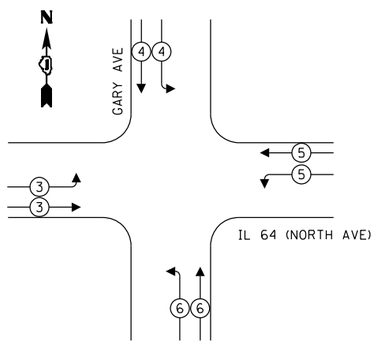

TRAFFIC SIGNAL ELECTRICAL SERVICE REQUIREMENTS

TYPE	QUANTITY	UNIT WATTAGE	TOTAL WATTAGE
SIGNAL HEAD 1 OR 3-SECTION	-	11	-
4-SECTION	-	14	-
5-SECTION	-	13	-
PROGRAMMABLE 3-SECTION	-	22	-
4-SECTION	-	32	-
5-SECTION	-	28	-
PEDESTRIAN SIGNAL	-	15	-
CONTROLLER	1	150	150
MASTER CONTROLLER	-	100	-
UPS	1	25	25
DETECTION RADAR OR VIDEO	-	20	-
BLANK-OUT SIGN	-	25	-
NETWORK SWITCH II OR III	1	35	35
CELLULAR MODEM	-	15	-
TOTAL UPS SIZING			210
UPS CHARGING	1	225	225
BATTERY HEATER MAT	1	180	180
CABINET HEATER	1	200	200
FLASHER	-	15	-
LED STREET NAME SIGN	-	120	-
LUMINAIRE	-	240	-
TOTAL SERVICE WIRE SIZING			815

ENERGY COSTS TO:
ILLINOIS DEPARTMENT OF TRANSPORTATION
201 W CENTER CT
SCHAUMBURG, IL 60196

ENERGY SUPPLY: COMPANY: COMED
PHONE: (866) 639-3532
ACCOUNT NUMBER: 20051-18081

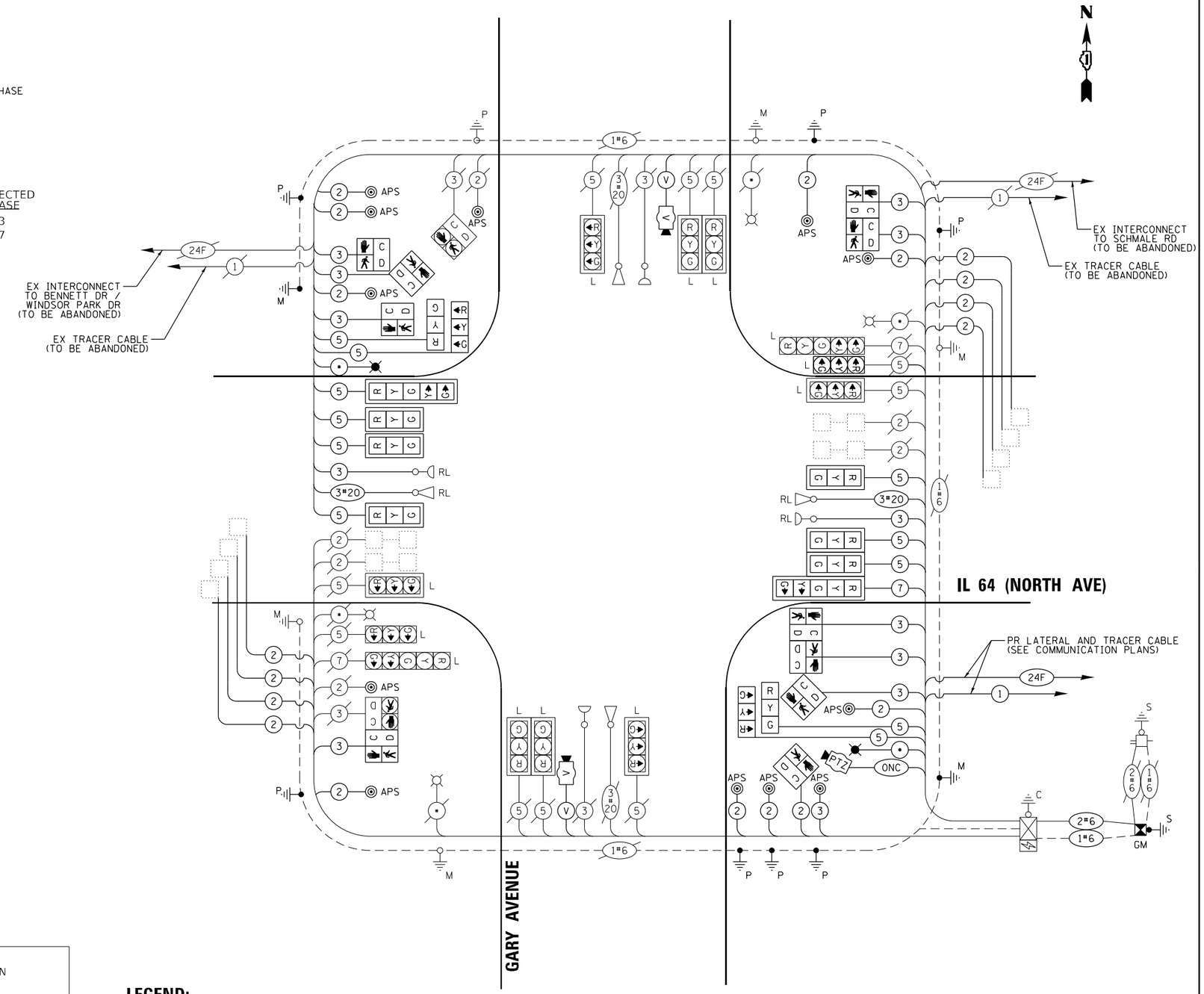

LEGEND:

L = LED LAMP MODULE REPLACEMENT
RL = RELOCATE
* = ROADWAY LIGHTING CABLE

CABLE PLAN

(NOT TO SCALE)

TS 6435
IDOT TACTICS
FORMER EAGLE 2E

MODEL: Default
FILE NAME: pw:\\h-pw.bentley.com:h-pw-01\Documents01 Active Projects\MW-Cr\S-1689931\00 - IL 64\Phase III\2 Design\CADD\Plan Sheets\Signal\IL64West Corridor Signal\D108121-sht4-75 KHA.dgn

Kimley»Horn
© 2023 KIMLEY-HORN AND ASSOCIATES, INC.
4001 WINTERGREEN ROAD, SUITE 603
WARRENVILLE, IL 60555
PHONE: 630-487-5550
WWW.KIMLEY-HORN.COM

USER NAME =	DESIGNED -	REVISED -	
	DRAWN -	REVISED -	
PLOT SCALE =	CHECKED -	REVISED -	
PLOT DATE =	DATE -	REVISED -	

STATE OF ILLINOIS
DEPARTMENT OF TRANSPORTATION

CABLE PLAN, PHASE DESIGNATION DIAGRAM, AND EMERGENCY VEHICLE PREEMPTION SEQUENCE
IL 64 (NORTH AVE) AND GARY AVE

SCALE: N.T.S. | SHEET OF SHEETS | STA. TO STA.

F.A.P. RTE.	SECTION	COUNTY	TOTAL SHEETS	SHEET NO.
307	2020-263-SUR,SW&TS	DUPAGE	529	176
		CONTRACT NO. 62N33		
		ILLINOIS	FED. AID PROJECT	

SIGN PANEL – TYPE 1 OR TYPE 2

ALL DIMENSIONS ARE IN INCHES UNLESS OTHERWISE NOTED

DESIGN SERIES	AREA (SQ FT)	SIGN PANEL TYPE	SHEETING TYPE	QTY. REQUIRED
D	12.5	2	ZZ	2

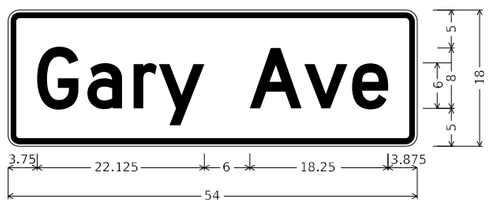

DESIGN SERIES	AREA (SQ FT)	SIGN PANEL TYPE	SHEETING TYPE	QTY. REQUIRED
D	6.75	1	ZZ	2

SCHEDULE OF QUANTITIES

	ITEM DESCRIPTION	UNIT	QUANTITY
	SIGN PANEL - TYPE 1	SQ FT	66.0
	SIGN PANEL - TYPE 2	SQ FT	25
	UNDERGROUND CONDUIT, GALVANIZED STEEL, 2" DIA.	FOOT	5
	UNDERGROUND CONDUIT, GALVANIZED STEEL, 3" DIA.	FOOT	154
	UNDERGROUND CONDUIT, GALVANIZED STEEL, 4" DIA.	FOOT	434
	MAINTENANCE OF EXISTING TRAFFIC SIGNAL INSTALLATION	EACH	1
	ELECTRIC CABLE IN CONDUIT, SIGNAL NO. 14 2C	FOOT	2460
	ELECTRIC CABLE IN CONDUIT, SIGNAL NO. 14 3C	FOOT	3380
	ELECTRIC CABLE IN CONDUIT, SIGNAL NO. 14 5C	FOOT	3210
	ELECTRIC CABLE IN CONDUIT, SIGNAL NO. 14 7C	FOOT	642
	ELECTRIC CABLE IN CONDUIT, LEAD-IN, NO. 14 1 PAIR	FOOT	3304
	ELECTRIC CABLE IN CONDUIT, SERVICE, NO. 6 2 C	FOOT	44
	ELECTRIC CABLE IN CONDUIT, EQUIPMENT GROUNDING CONDUCTOR, NO. 6 1C	FOOT	632
	STEEL COMBINATION MAST ARM ASSEMBLY AND POLE 56 FT.	EACH	1
	STEEL COMBINATION MAST ARM ASSEMBLY AND POLE 58 FT.	EACH	1
	CONCRETE FOUNDATION, TYPE A	FOOT	4
	CONCRETE FOUNDATION, TYPE E 42-INCH DIAMETER	FOOT	42
	DRILL EXISTING HANDHOLE	EACH	15
	SIGNAL HEAD, LED, 1-FACE, 3-SECTION, MAST-ARM MOUNTED	EACH	6
	SIGNAL HEAD, LED, 1-FACE, 3-SECTION, BRACKET MOUNTED	EACH	4
	SIGNAL HEAD, LED, 1-FACE, 5-SECTION, BRACKET MOUNTED	EACH	2
	PEDESTRIAN SIGNAL HEAD, LED, 1-FACE, BRACKET MOUNTED WITH COUNTDOWN TIMER	EACH	10
	TRAFFIC SIGNAL BACKPLATE, LOUVERED, FORMED PLASTIC	EACH	8
	INDUCTIVE LOOP DETECTOR	EACH	8
	TEMPORARY TRAFFIC SIGNAL INSTALLATION	EACH	1
*	RELOCATE EXISTING EMERGENCY VEHICLE PRIORITY SYSTEM, DETECTOR UNIT	EACH	2
	REMOVE EXISTING TRAFFIC SIGNAL EQUIPMENT	EACH	1
	CLOSED CIRCUIT TELEVISION DOME CAMERA, HD	EACH	1
*	EMERGENCY VEHICLE PRIORITY SYSTEM LINE SENSOR CABLE, NO. 20 3/C	FOOT	642
	LED LAMP MODULE REPLACEMENT	EACH	40
	OUTDOOR RATED NETWORK CABLE	FOOT	182
	SERVICE INSTALLATION, GROUND MOUNTED, METERED	EACH	1
	LAYER II (DATALINK) SWITCH	EACH	1
	TERMINATE FIBER IN CABINET	EACH	12
	PEDESTRIAN SIGNAL POST, 10 FT.	EACH	3
	PEDESTRIAN SIGNAL POST, 5 FT.	EACH	4
	TACTICS LICENSE EXPANSION	EACH	1
	RELOCATE EXISTING LUMINAIRE	EACH	2
	FULL-ACTUATED CONTROLLER IN EXISTING CABINET	EACH	1
	REMOVE AND REPLACE BATTERIES FOR UNINTERUPTABLE POWER SUPPLY, EXTENDED	EACH	1
	FIBER OPTIC INTERCONNECT CENTER, 48 PORT	EACH	1
	ACCESSIBLE PEDESTRIAN SIGNALS	EACH	12
	CONCRETE FOUNDATION, TYPE A 12-INCH DIAMETER	FOOT	28
	LED SIGNAL FACE, LENS COVER	EACH	24
	VIDEO VEHICLE DETECTION SYSTEM, SINGLE APPROACH	EACH	2
	TEMPORARY TRAFFIC SIGNAL TIMING	EACH	1

* - 100% COST TO THE VILLAGE OF CAROL STREAM

TS 6435
IDOT TACTICS
FORMER EAGLE 2E

MODEL: Default
FILE NAME: pw:\\uh-pw.kimley.com:uh-pw49\Documents\01 Active Projects\HWY-Ch-S-168959100 - IL 64\Phase II\2 Design\CADD\Plan Sheets\Sign\IL64West Corridor Sign\KD10872-Int4-26_KHA.dgn

Kimley»Horn
© 2022 KIMLEY-HORN AND ASSOCIATES, INC.
4001 WINFIELD ROAD, SUITE 600
WARRENVILLE, IL 60555
PHONE: 630-487-5550
WWW.KIMLEY-HORN.COM

USER NAME =	DESIGNED -	REVISED -	
	DRAWN -	REVISED -	
PLOT SCALE =	CHECKED -	REVISED -	
PLOT DATE =	DATE -	REVISED -	

STATE OF ILLINOIS
DEPARTMENT OF TRANSPORTATION

MAST ARM MOUNTED STREET NAME SIGNS AND SCHEDULE OF QUANTITIES
IL 64 (NORTH AVE) AND GARY AVE

SCALE: N.T.S. | SHEET OF SHEETS | STA. TO STA.

F.A.P. RTE.	SECTION	COUNTY	TOTAL SHEETS	SHEET NO.
307	2020-263-SUR,SW&TS	DUPAGE	529	177
		CONTRACT NO. 62N33		
		ILLINOIS	FED. AID PROJECT	

NOTES

1. THE EXISTING TRAFFIC SIGNAL EQUIPMENT SHALL NOT BE REMOVED UNTIL THE PROPOSED TRAFFIC SIGNAL EQUIPMENT IS FULLY OPERATIONAL OR AS DIRECTED BY THE ENGINEER.
2. ALL EXISTING TRAFFIC SIGNAL CABLE NO LONGER REQUIRED SHALL BE REMOVED.

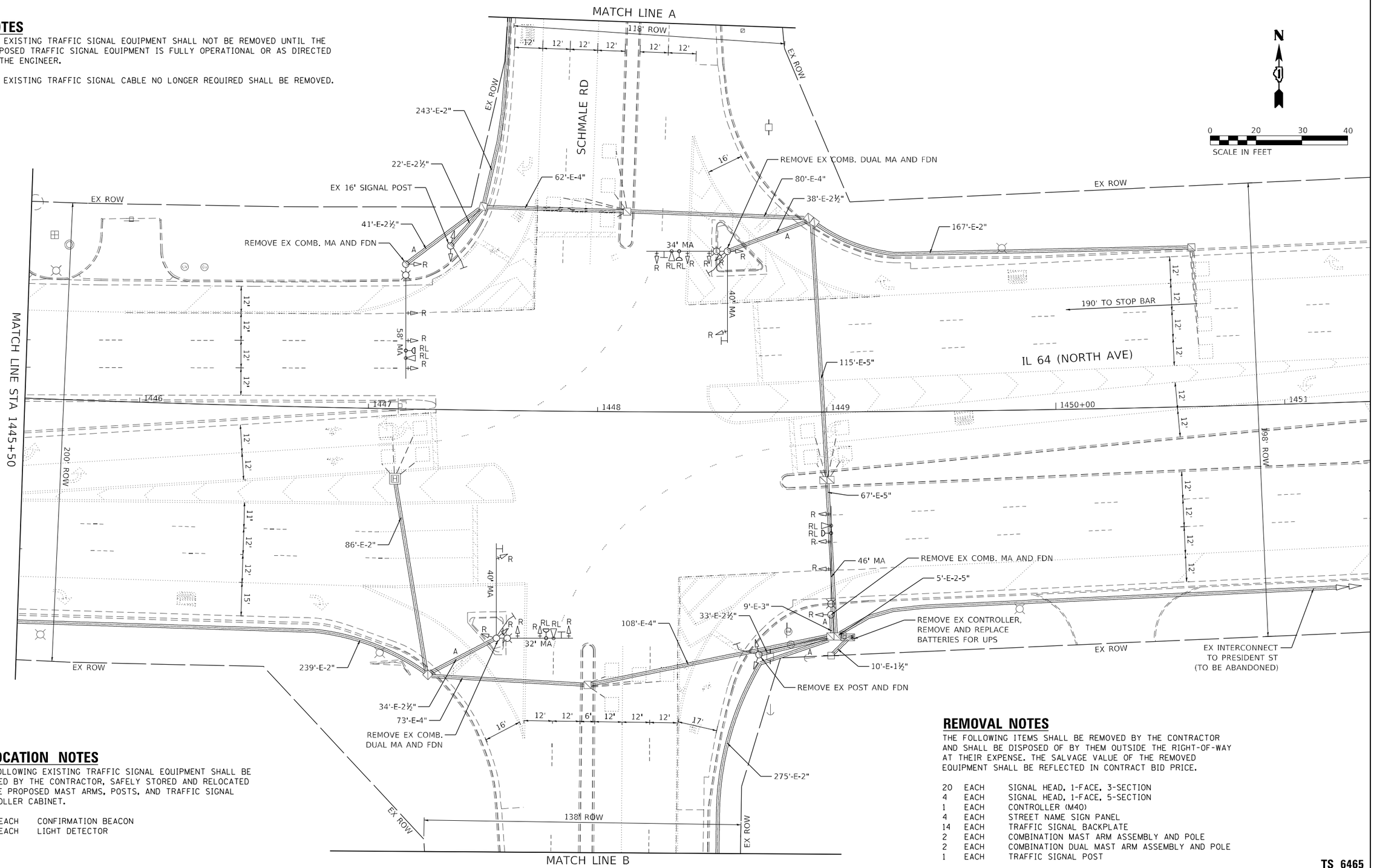

RELOCATION NOTES

THE FOLLOWING EXISTING TRAFFIC SIGNAL EQUIPMENT SHALL BE REMOVED BY THE CONTRACTOR, SAFELY STORED AND RELOCATED TO THE PROPOSED MAST ARMS, POSTS, AND TRAFFIC SIGNAL CONTROLLER CABINET.

4	EACH	CONFIRMATION BEACON
4	EACH	LIGHT DETECTOR

REMOVAL NOTES

THE FOLLOWING ITEMS SHALL BE REMOVED BY THE CONTRACTOR AND SHALL BE DISPOSED OF BY THEM OUTSIDE THE RIGHT-OF-WAY AT THEIR EXPENSE. THE SALVAGE VALUE OF THE REMOVED EQUIPMENT SHALL BE REFLECTED IN CONTRACT BID PRICE.

20	EACH	SIGNAL HEAD, 1-FACE, 3-SECTION
4	EACH	SIGNAL HEAD, 1-FACE, 5-SECTION
1	EACH	CONTROLLER (M40)
4	EACH	STREET NAME SIGN PANEL
14	EACH	TRAFFIC SIGNAL BACKPLATE
2	EACH	COMBINATION MAST ARM ASSEMBLY AND POLE
2	EACH	COMBINATION DUAL MAST ARM ASSEMBLY AND POLE
1	EACH	TRAFFIC SIGNAL POST

TS 6465
IDOT TACTICS
FORMER EAGLE 2E

MODEL: Default
FILE NAME: pw:\\jb-pw.bentley.com:jb-pw-01\Documents\01 Active Projects\MW-CHS-16895100 - IL 64\Phase II 2 Design\CADd\Plan Sheets\Signals\West Corridor Signals\D108121-sht-ts-77 KHA.dgn

Kimley»Horn
© 2023 KIMLEY-HORN AND ASSOCIATES, INC.
4201 WINFIELD ROAD, SUITE 603
WARRENVILLE, IL 60555
PHONE: 630.487.5550
WWW.KIMLEY-HORN.COM

USER NAME =	DESIGNED -	REVISED -	
	DRAWN -	REVISED -	
PLOT SCALE =	CHECKED -	REVISED -	
PLOT DATE =	DATE -	REVISED -	

STATE OF ILLINOIS
DEPARTMENT OF TRANSPORTATION

TRAFFIC SIGNAL EQUIPMENT REMOVAL PLAN
IL 64 (NORTH AVE) AND SCHMALE RD

SCALE: 1" = 20' | SHEET OF SHEETS | STA. TO STA.

F.A.P. RTE.	SECTION	COUNTY	TOTAL SHEETS	SHEET NO.
307	2020-263-SUR,SW&TS	DUPAGE	529	178

CONTRACT NO. 62N33
ILLINOIS | FED. AID PROJECT

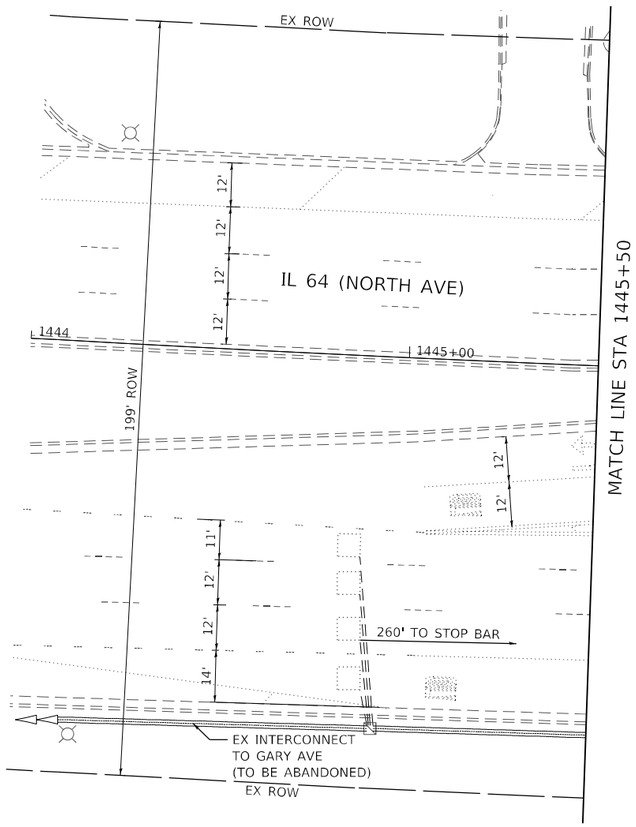

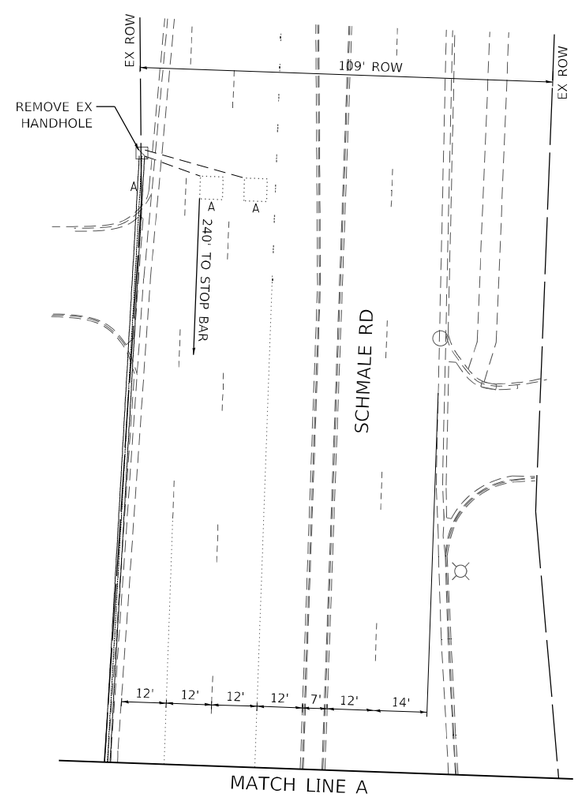

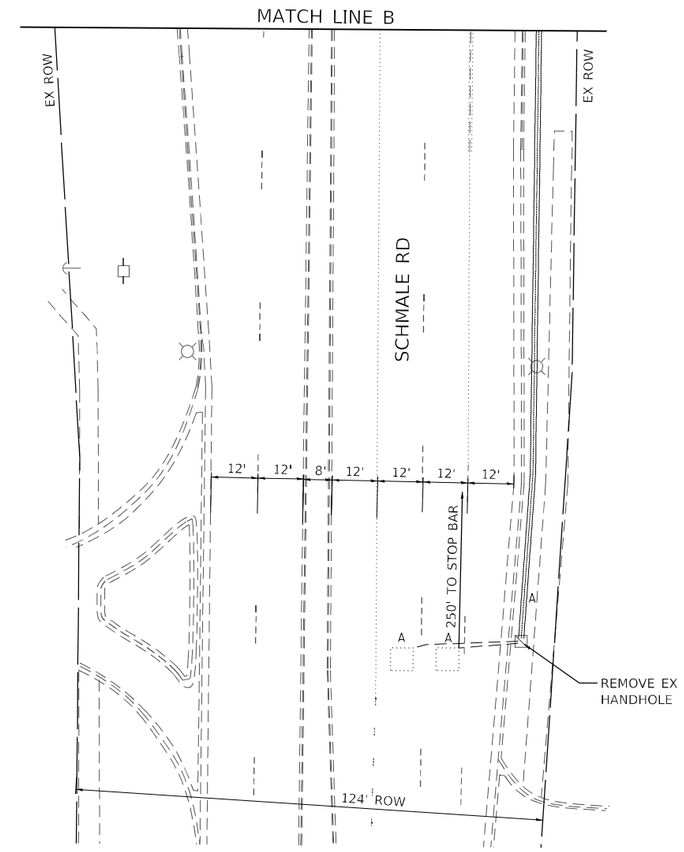

N

0 20 30 40
SCALE IN FEET

TS 6465
IDOT TACTICS
FORMER EAGLE 2E

MODEL: Default
FILE NAME: pw:\\h-pw.bentley.com:h-pw-01\Documents\01 Active Projects\MW-C-S-16895100 - IL 64\Phase III\2 Design\CADD\Plan Sheets\Signal\West Corridor Signal\D108121-sht4-278_KHA.dgn

Kimley»Horn
© 2023 KIMLEY-HORN AND ASSOCIATES, INC.
4201 WINFIELD ROAD, SUITE 603
WARRENVILLE, IL 60555
PHONE: 630-487-5550
WWW.KIMLEY-HORN.COM

USER NAME =	DESIGNED -	REVISED -
	DRAWN -	REVISED -
PLOT SCALE =	CHECKED -	REVISED -
PLOT DATE =	DATE -	REVISED -

STATE OF ILLINOIS
DEPARTMENT OF TRANSPORTATION

TRAFFIC SIGNAL EQUIPMENT REMOVAL PLAN
IL 64 (NORTH AVE) AND SCHMALE RD

SCALE: 1" = 20' | SHEET OF SHEETS | STA. TO STA.

F.A.P. RTE.	SECTION	COUNTY	TOTAL SHEETS	SHEET NO.
307	2020-263-SUR,SW&TS	DUPAGE	529	179
		CONTRACT NO. 62N33		
	ILLINOIS	FED. AID PROJECT		

NOTES

1. ALL PROPOSED TRAFFIC SIGNAL CABLE SHALL BE ROUTED THROUGH THE PROPOSED CONDUIT.
2. A SEPARATE LEAD-IN CABLE SHALL BE INSTALLED FOR THE DETECTOR LOOPS ON IL 64 (NORTH AVE).
3. THERE SHALL BE A MINIMUM OF 4' SIDEWALK CLEARANCE IN FRONT/BEHIND OF THE TRAFFIC SIGNAL FOUNDATIONS TO BE ADA COMPLIANT.
4. THE SIDEWALK CURBS ON ALL QUADRANTS SHALL BE CUT SO THAT THE POST AND MAST ARM FOUNDATIONS ARE FLUSH WITH THE EDGE OF THE SIDEWALK.
5. ALL PUSH BUTTONS SHALL BE APS.
6. THIS LOCATION HAS BEEN DESIGNED TO BE ADA COMPLIANT. ANY DEVIATION FROM THIS PLAN FOR THE POSTS THAT HAVE PEDESTRIAN EQUIPMENT WILL HAVE TO BE APPROVED BY THE ENGINEER TO ENSURE ADA COMPLIANCE.
7. CONTRACTOR SHALL VERIFY THAT THE PLACEMENT OF THE PROPOSED SIGNAL EQUIPMENT ADJACENT TO EXISTING RAMPS MEET ADA REQUIREMENTS. THE ENGINEER SHALL APPROVE THE PROPOSED LOCATIONS OF THE SIGNAL EQUIPMENT BEFORE INSTALLATION.

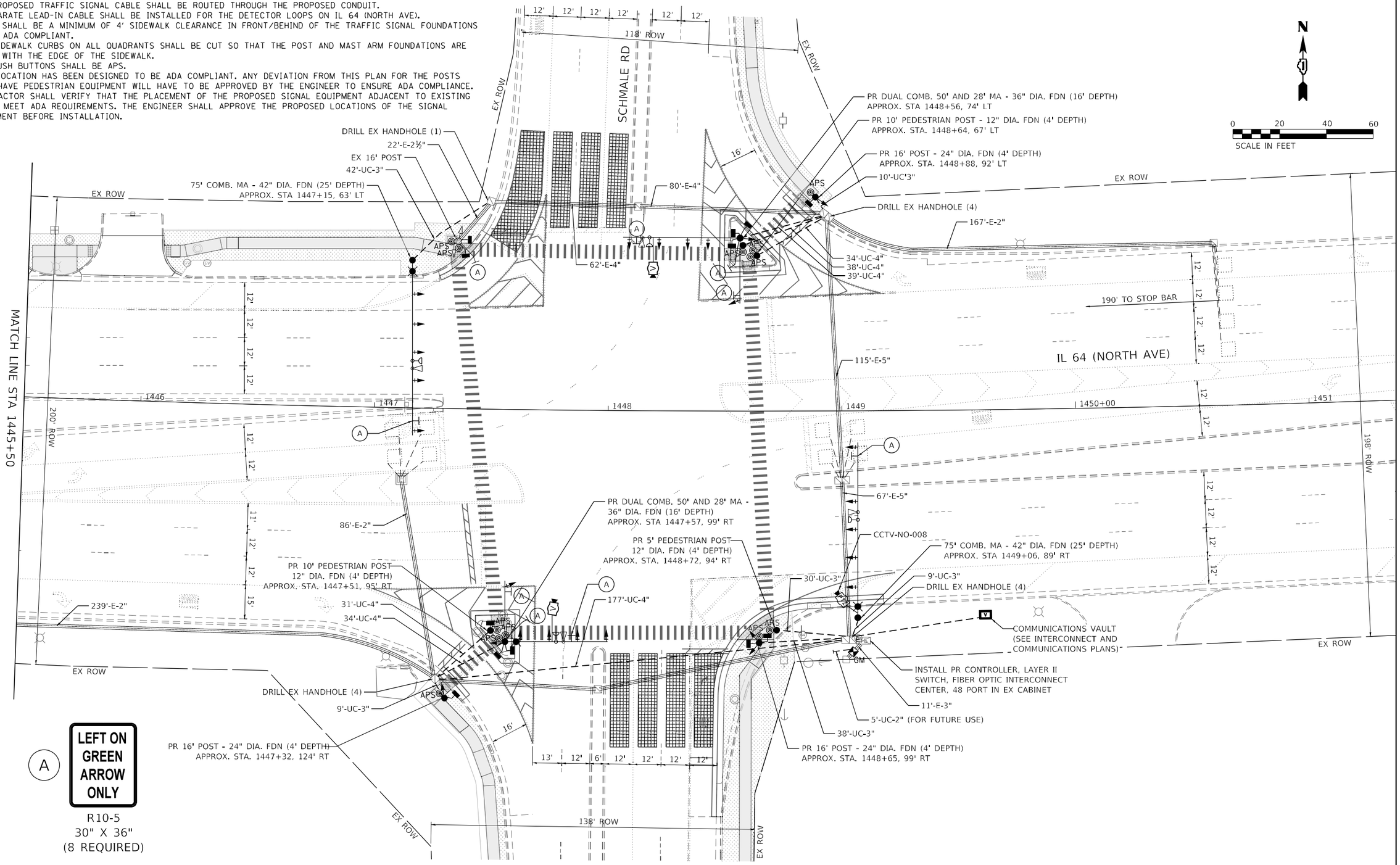

TS 6465
IDOT TACTICS
FORMER EAGLE 2E

MODEL: Default
FILE NAME: pw:\\jk-pw.kimley.com:ch-pw-01\Documents\01 Active Projects\HW-Ch-S-168959100 - IL 64\Phase III\2 Design\CAD\Plan Sheets\Signal\West Corridor Signal\D10821-ch14-79 KHA.dgn

Kimley»Horn
© 2022 KIMLEY-HORN AND ASSOCIATES, INC.
4001 WINFIELD ROAD, SUITE 603
WARRENVILLE, IL 60555
PHONE: 630-487-5550
WWW.KIMLEY-HORN.COM

USER NAME =	DESIGNED -	REVISED -
	DRAWN -	REVISED -
PLOT SCALE =	CHECKED -	REVISED -
PLOT DATE =	DATE -	REVISED -

STATE OF ILLINOIS
DEPARTMENT OF TRANSPORTATION

TRAFFIC SIGNAL MODERNIZATION PLAN
IL 64 (NORTH AVE) AND SCHMALE RD

SCALE: 1" = 20' | SHEET OF SHEETS | STA. TO STA.

F.A.P. RTE.	SECTION	COUNTY	TOTAL SHEETS	SHEET NO.
307	2020-263-SUR,SW&TS	DUPAGE	529	180
		CONTRACT NO. 62N33		
	ILLINOIS	FED. AID PROJECT		

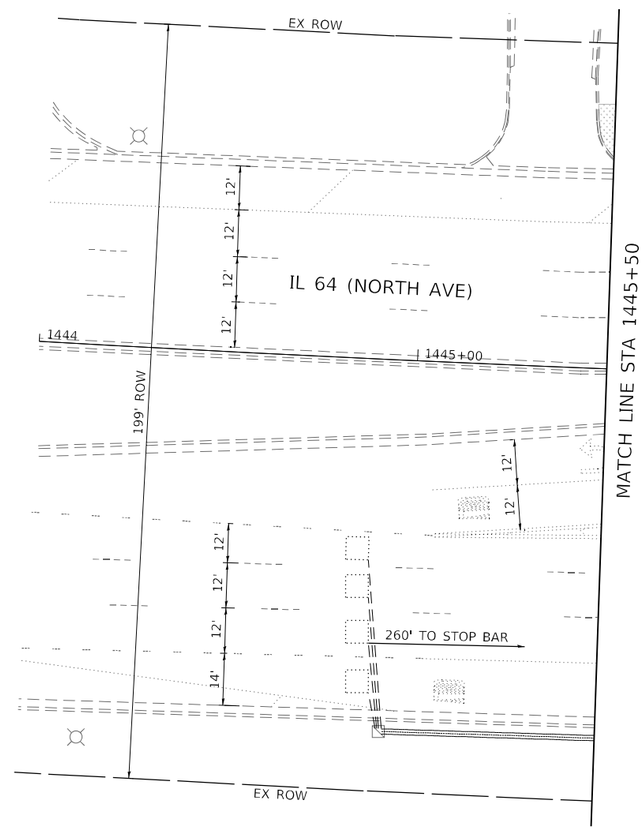

N

0 20 30 40
SCALE IN FEET

TS 6465
IDOT TACTICS
FORMER EAGLE 2E

MODEL: Default
FILE NAME: pw:\\jk-pw.bentley.com:ch-pw-01\Documents\01 Active Projects\MW-CH-S-1689591\00 - IL 64\Phase III\2 Design\CADD\Plan Sheets\Signal\West Corridor Signal\D1081214-\N14-80_KHA.dgn

Kimley»Horn
© 2023 KIMLEY-HORN AND ASSOCIATES, INC.
4201 WINFIELD ROAD, SUITE 600
WARRENVILLE, IL 60555
PHONE: 630-487-5550
WWW.KIMLEY-HORN.COM

USER NAME =	DESIGNED -	REVISED -
	DRAWN -	REVISED -
PLOT SCALE =	CHECKED -	REVISED -
PLOT DATE =	DATE -	REVISED -

STATE OF ILLINOIS
DEPARTMENT OF TRANSPORTATION

TRAFFIC SIGNAL MODERNIZATION PLAN
IL 64 (NORTH AVE) AND SCHMALE RD

SCALE: 1" = 20' | SHEET OF SHEETS | STA. TO STA.

F.A.P. RTE.	SECTION	COUNTY	TOTAL SHEETS	SHEET NO.
307	2020-263-SUR,SW&TS	DUPAGE	529	181
		CONTRACT NO. 62N33		
	ILLINOIS	FED. AID PROJECT		

EXISTING CONTROLLER SEQUENCE

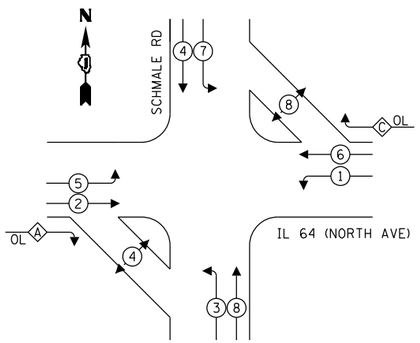

PROPOSED CONTROLLER SEQUENCE

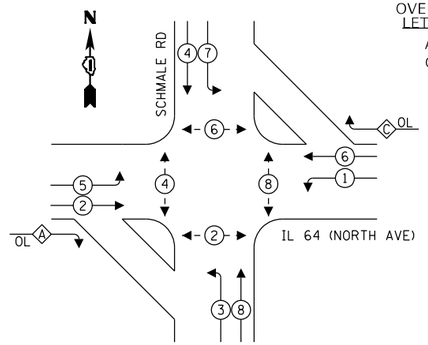

OVERLAP LETTER		PERMISSIVE PHASE		PROTECTED PHASE
A	=	2	+	3
C	=	6	+	7

EXISTING AND PROPOSED EMERGENCY VEHICLE PREEMPTION SEQUENCE

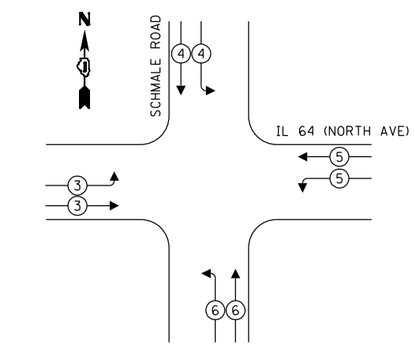

LEGEND:

- PROTECTED PHASE
- PROTECTED/PERMITTED PHASE
- PEDESTRIAN PHASE
- OL OVERLAP

TRAFFIC SIGNAL ELECTRICAL SERVICE REQUIREMENTS

TYPE		QUANTITY	UNIT WATTAGE	TOTAL WATTAGE
SIGNAL HEAD	1 OR 3-SECTION	19	11	209
	4-SECTION	-	14	-
	5-SECTION	4	13	52
PROGRAMMABLE	3-SECTION	-	22	-
	4-SECTION	-	32	-
	5-SECTION	-	28	-
PEDESTRIAN SIGNAL		12	15	180
CONTROLLER		1	150	150
MASTER CONTROLLER		-	100	-
UPS		1	25	25
DETECTION	RADAR OR VIDEO	2	20	40
BLANK-OUT SIGN		-	25	-
NETWORK SWITCH	II OR III	1	35	35
CELLULAR MODEM		-	15	-
PTZ		1	75	75
	TOTAL UPS SIZING			691
UPS CHARGING		1	225	225
BATTERY HEATER MAT		1	180	180
CABINET HEATER		1	200	200
FLASHER		-	15	-
LED STREET NAME SIGN		-	120	-
LUMINAIRE		4	240	960
	TOTAL SERVICE WIRE SIZING			2256

ENERGY COSTS TO:
ILLINOIS DEPARTMENT OF TRANSPORTATION
201 W CENTER CT
SCHAUMBURG, IL 60196

ENERGY SUPPLY: COMPANY: COMED
PHONE: (866) 639-3532
ACCOUNT NUMBER: 00940-45191

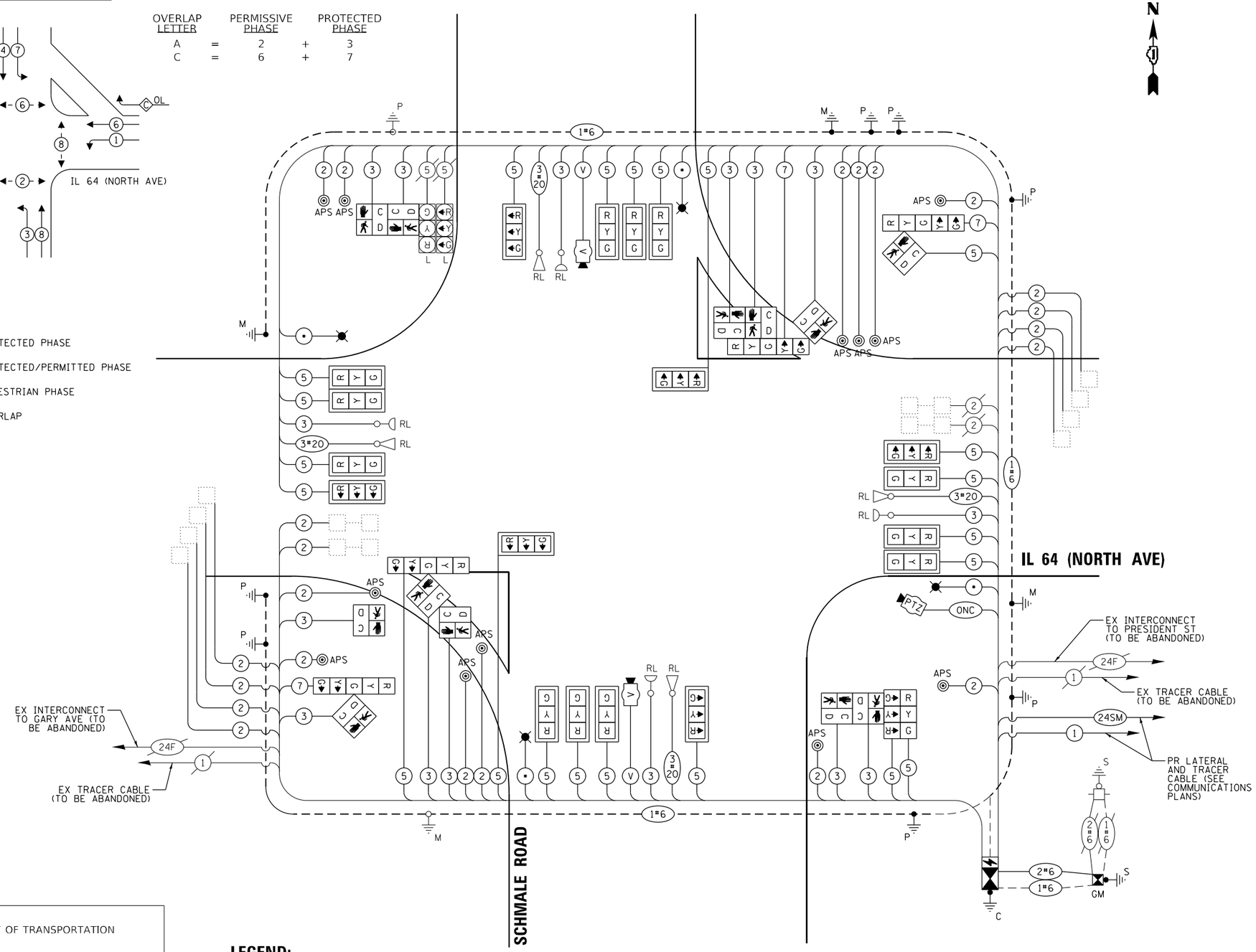

LEGEND:

* = ROADWAY LIGHTING CABLE

CABLE PLAN

(NOT TO SCALE)

TS 6465
IDOT TACTICS
FORMER EAGLE 2E

MODEL: Default
FILE NAME: pw:\\h-pw.bentley.com:h-pw-01\Documents\01 Active Projects\MW-CHS-16895910 - IL 64\Phase III Design\CAD\Plan Sheets\Signal\NWest Corridor Signal\08\12-int-01-81_KHA.dgn

Kimley»Horn
© 2023 KIMLEY-HORN AND ASSOCIATES, INC.
4201 WINFIELD ROAD, SUITE 600
WARRENVILLE, IL 60555
PHONE: 630-487-5550
WWW.KIMLEY-HORN.COM

USER NAME =	DESIGNED -	REVISED -	
	DRAWN -	REVISED -	
PLOT SCALE =	CHECKED -	REVISED -	
PLOT DATE =	DATE -	REVISED -	

STATE OF ILLINOIS
DEPARTMENT OF TRANSPORTATION

CABLE PLAN, PHASE DESIGNATION DIAGRAM, AND EMERGENCY VEHICLE PREEMPTION SEQUENCE
IL 64 (NORTH AVE) AND SCHMALE RD

SCALE: N.T.S. | SHEET OF SHEETS | STA. TO STA.

F.A.P. RTE.	SECTION	COUNTY	TOTAL SHEETS	SHEET NO.
307	2020-263-SUR,SW&TS	DUPAGE	529	182
		CONTRACT NO. 62N33		
		ILLINOIS	FED. AID PROJECT	

SIGN PANEL – TYPE 1 OR TYPE 2

ALL DIMENSIONS ARE IN INCHES UNLESS OTHERWISE NOTED

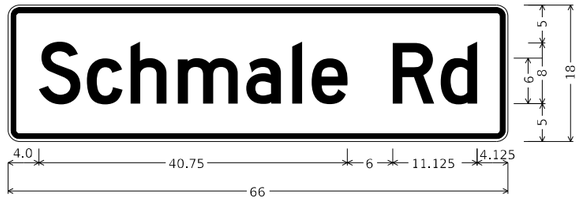

DESIGN SERIES	AREA (SQ FT)	SIGN PANEL TYPE	SHEETING TYPE	QTY. REQUIRED
D	8.25	1	ZZ	2

DESIGN SERIES	AREA (SQ FT)	SIGN PANEL TYPE	SHEETING TYPE	QTY. REQUIRED
D	12.5	2	ZZ	2

SCHEDULE OF QUANTITIES

	ITEM DESCRIPTION	UNIT	QUANTITY
	SIGN PANEL - TYPE 1	SQ FT	76.5
	SIGN PANEL - TYPE 2	SQ FT	25
	UNDERGROUND CONDUIT, GALVANIZED STEEL, 2" DIA.	FOOT	5
	UNDERGROUND CONDUIT, GALVANIZED STEEL, 3" DIA.	FOOT	138
	UNDERGROUND CONDUIT, GALVANIZED STEEL, 4" DIA.	FOOT	353
	MAINTENANCE OF EXISTING TRAFFIC SIGNAL INSTALLATION	EACH	1
	ELECTRIC CABLE IN CONDUIT, SIGNAL NO. 14 2C	FOOT	3001
	ELECTRIC CABLE IN CONDUIT, SIGNAL NO. 14 3C	FOOT	4528
	ELECTRIC CABLE IN CONDUIT, SIGNAL NO. 14 5C	FOOT	6158
	ELECTRIC CABLE IN CONDUIT, SIGNAL NO. 14 7C	FOOT	902
	ELECTRIC CABLE IN CONDUIT, LEAD-IN, NO. 14 1 PAIR	FOOT	1684
	ELECTRIC CABLE IN CONDUIT, SERVICE, NO. 6 2 C	FOOT	38
	ELECTRIC CABLE IN CONDUIT, EQUIPMENT GROUNDING CONDUCTOR, NO. 6 1C	FOOT	529
	TRAFFIC SIGNAL POST, GALVANIZED STEEL 16 FT.	EACH	3
	STEEL COMBINATION MAST ARM ASSEMBLY AND POLE 75 FT.	EACH	2
	STEEL COMBINATION MAST ARM ASSEMBLY AND POLE WITH DUAL MAST ARMS, 28 FT. AND 50 FT.	EACH	2
	CONCRETE FOUNDATION, TYPE A	FOOT	16
	CONCRETE FOUNDATION, TYPE E 36-INCH DIAMETER	FOOT	32
	CONCRETE FOUNDATION, TYPE E 42-INCH DIAMETER	FOOT	50
	DRILL EXISTING HANDHOLE	EACH	13
	SIGNAL HEAD, LED, 1-FACE, 3-SECTION, MAST-ARM MOUNTED	EACH	14
	SIGNAL HEAD, LED, 1-FACE, 3-SECTION, BRACKET MOUNTED	EACH	2
	SIGNAL HEAD, LED, 1-FACE, 5-SECTION, BRACKET MOUNTED	EACH	4
	PEDESTRIAN SIGNAL HEAD, LED, 1-FACE, BRACKET MOUNTED WITH COUNTDOWN TIMER	EACH	12
	TRAFFIC SIGNAL BACKPLATE, LOUVERED, FORMED PLASTIC	EACH	14
	INDUCTIVE LOOP DETECTOR	EACH	10
*	RELOCATE EXISTING EMERGENCY VEHICLE PRIORITY SYSTEM, DETECTOR UNIT	EACH	4
	REMOVE EXISTING TRAFFIC SIGNAL EQUIPMENT	EACH	1
	REMOVE EXISTING HANDHOLE	EACH	2
	REMOVE EXISTING CONCRETE FOUNDATION	EACH	5
	CLOSED CIRCUIT TELEVISION DOME CAMERA, HD	EACH	1
*	EMERGENCY VEHICLE PRIORITY SYSTEM LINE SENSOR CABLE, NO. 20 3/C	FOOT	1332
	OUTDOOR RATED NETWORK CABLE	FOOT	135
	SERVICE INSTALLATION, GROUND MOUNTED, METERED	EACH	1
	REMOTE CONTROLLED VIDEO SYSTEM	EACH	1
	LAYER II (DATALINK) SWITCH	EACH	1
	TERMINATE FIBER IN CABINET	EACH	12
	PEDESTRIAN SIGNAL POST, 10 FT.	EACH	2
	PEDESTRIAN SIGNAL POST, 5 FT.	EACH	1
	TACTICS LICENSE EXPANSION	EACH	1
	FULL-ACTUATED CONTROLLER IN EXISTING CABINET	EACH	1
	REMOVE AND REPLACE BATTERIES FOR UNINTERUPTABLE POWER SUPPLY, EXTENDED	EACH	1
	FIBER OPTIC INTERCONNECT CENTER, 48 PORT	EACH	1
	ACCESSIBLE PEDESTRIAN SIGNALS	EACH	12
	CONCRETE FOUNDATION, TYPE A 12-INCH DIAMETER	FOOT	12
	LED SIGNAL FACE, LENS COVER	EACH	25
	VIDEO VEHICLE DETECTION SYSTEM, SINGLE APPROACH	EACH	2
	CAMERA MOUNTING ASSEMBLY	EACH	1

* - 100% COST TO THE VILLAGE OF CAROL STREAM

TS 6465
IDOT TACTICS
FORMER EAGLE 2E

MODEL: Default
FILE NAME: pw:\\kh-pw.bentley.com:kh-pw-01\Documents\01 Active Projects\MV-CHS-168959100 - IL 64\Phase III\2 Design\CAD\Plan Sheets\Signal\WestCorridor Signal\010812-sht4-s82_KHA.dgn

Kimley»Horn
© 2022 KIMLEY-HORN AND ASSOCIATES, INC.
4201 WINFIELD ROAD, SUITE 600
WARRENVILLE, IL 60555
PHONE: 630-487-5550
WWW.KIMLEY-HORN.COM

USER NAME =	DESIGNED -	REVISED -	
	DRAWN -	REVISED -	
PLOT SCALE =	CHECKED -	REVISED -	
PLOT DATE =	DATE -	REVISED -	

STATE OF ILLINOIS
DEPARTMENT OF TRANSPORTATION

MAST ARM MOUNTED STREET NAME SIGNS AND SCHEDULE OF QUANTITIES IL 64 (NORTH AVE) AND SCHMALE RD

SCALE: N.T.S. | SHEET OF SHEETS | STA. TO STA.

F.A.P. RTE.	SECTION	COUNTY	TOTAL SHEETS	SHEET NO.
307	2020-263-SUR,SW&TS	DUPAGE	529	183
		CONTRACT NO. 62N33		
	ILLINOIS	FED. AID PROJECT		

NOTES

1. THE EXISTING TRAFFIC SIGNAL EQUIPMENT SHALL NOT BE REMOVED UNTIL THE PROPOSED TRAFFIC SIGNAL EQUIPMENT IS FULLY OPERATIONAL OR AS DIRECTED BY THE ENGINEER.
2. ALL EXISTING TRAFFIC SIGNAL CABLE NO LONGER REQUIRED SHALL BE REMOVED.
3. THE REMOVAL OF THE EXISTING MASTER CONTROLLER SHALL INCLUDE DISCONNECTING THE EXISTING TELEPHONE SERVICE.

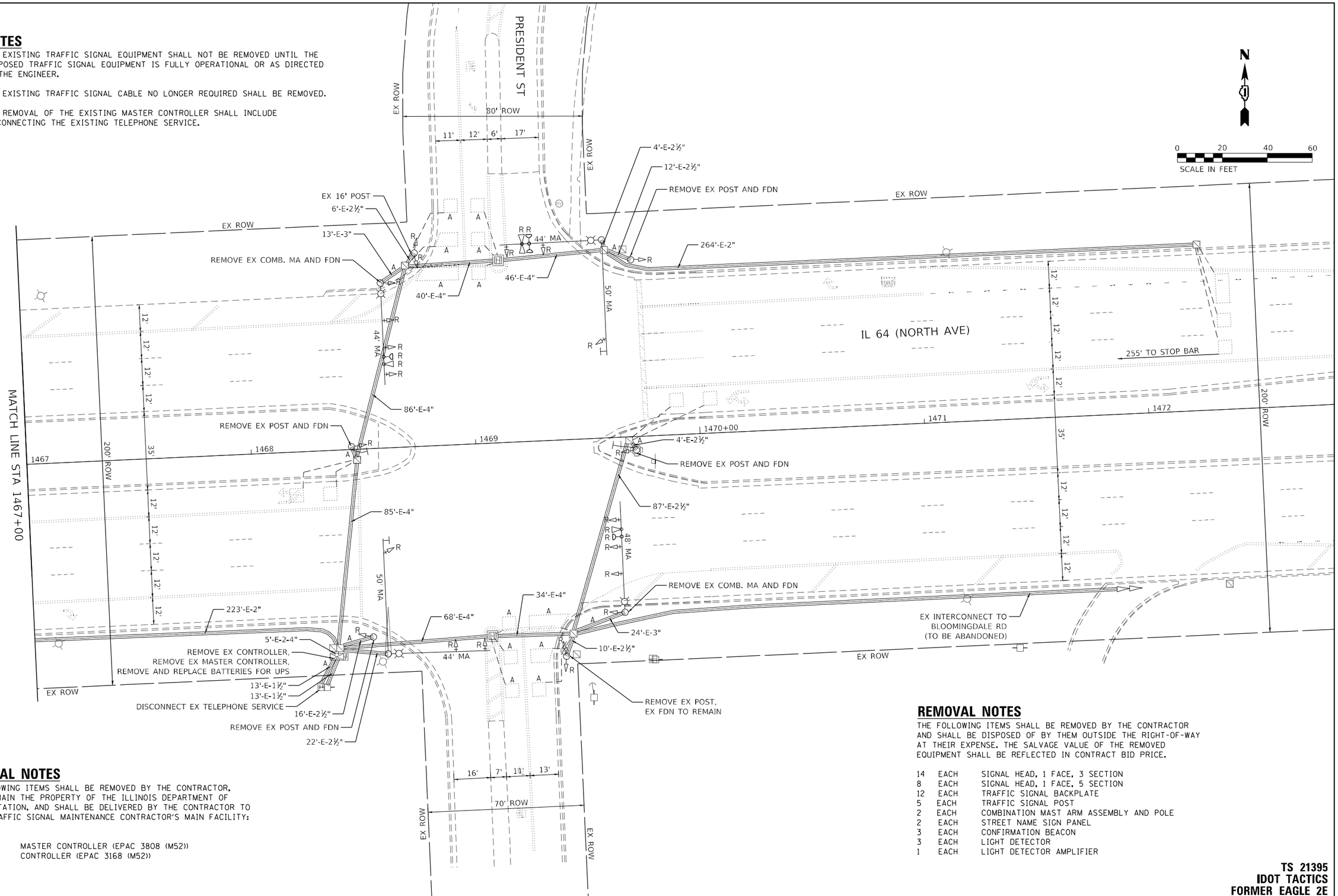

REMOVAL NOTES

THE FOLLOWING ITEMS SHALL BE REMOVED BY THE CONTRACTOR, SHALL REMAIN THE PROPERTY OF THE ILLINOIS DEPARTMENT OF TRANSPORTATION, AND SHALL BE DELIVERED BY THE CONTRACTOR TO IDOT'S TRAFFIC SIGNAL MAINTENANCE CONTRACTOR'S MAIN FACILITY:

1	EACH	MASTER CONTROLLER (EPAC 3808 (M52))
1	EACH	CONTROLLER (EPAC 3168 (M52))

REMOVAL NOTES

THE FOLLOWING ITEMS SHALL BE REMOVED BY THE CONTRACTOR AND SHALL BE DISPOSED OF BY THEM OUTSIDE THE RIGHT-OF-WAY AT THEIR EXPENSE. THE SALVAGE VALUE OF THE REMOVED EQUIPMENT SHALL BE REFLECTED IN CONTRACT BID PRICE.

14	EACH	SIGNAL HEAD, 1 FACE, 3 SECTION
8	EACH	SIGNAL HEAD, 1 FACE, 5 SECTION
12	EACH	TRAFFIC SIGNAL BACKPLATE
5	EACH	TRAFFIC SIGNAL POST
2	EACH	COMBINATION MAST ARM ASSEMBLY AND POLE
2	EACH	STREET NAME SIGN PANEL
3	EACH	CONFIRMATION BEACON
3	EACH	LIGHT DETECTOR
1	EACH	LIGHT DETECTOR AMPLIFIER

TS 21395
IDOT TACTICS
FORMER EAGLE 2E

MODEL: Default
FILE NAME: pw:\\kh-pw.bentley.com:kh-pw-01\Documents\01 Active Projects\MVCH-S-1689910 - IL 64\Phase III\2 Design\CADD\Plan Sheets\Signal\West Corridor Signal\D1081212-sht4-s3_KHA.dgn

Kimley»Horn
© 2020 KIMLEY-HORN AND ASSOCIATES, INC.
4201 WINFIELD ROAD, SUITE 600
WARRENVILLE, IL 60555
PHONE: 630-487-5550
WWW.KIMLEY-HORN.COM

USER NAME =	DESIGNED -	REVISED -	
	DRAWN -	REVISED -	
PLOT SCALE =	CHECKED -	REVISED -	
PLOT DATE =	DATE -	REVISED -	

STATE OF ILLINOIS
DEPARTMENT OF TRANSPORTATION

TRAFFIC SIGNAL EQUIPMENT REMOVAL PLAN
IL 64 (NORTH AVE) AND PRESIDENT ST

SCALE: 1" = 20' | SHEET OF SHEETS | STA. TO STA.

F.A.P. RTE.	SECTION	COUNTY	TOTAL SHEETS	SHEET NO.
307	2020-263-SUR,SW&TS	DUPAGE	529	184
		CONTRACT NO. 62N33		
	ILLINOIS	FED. AID PROJECT		

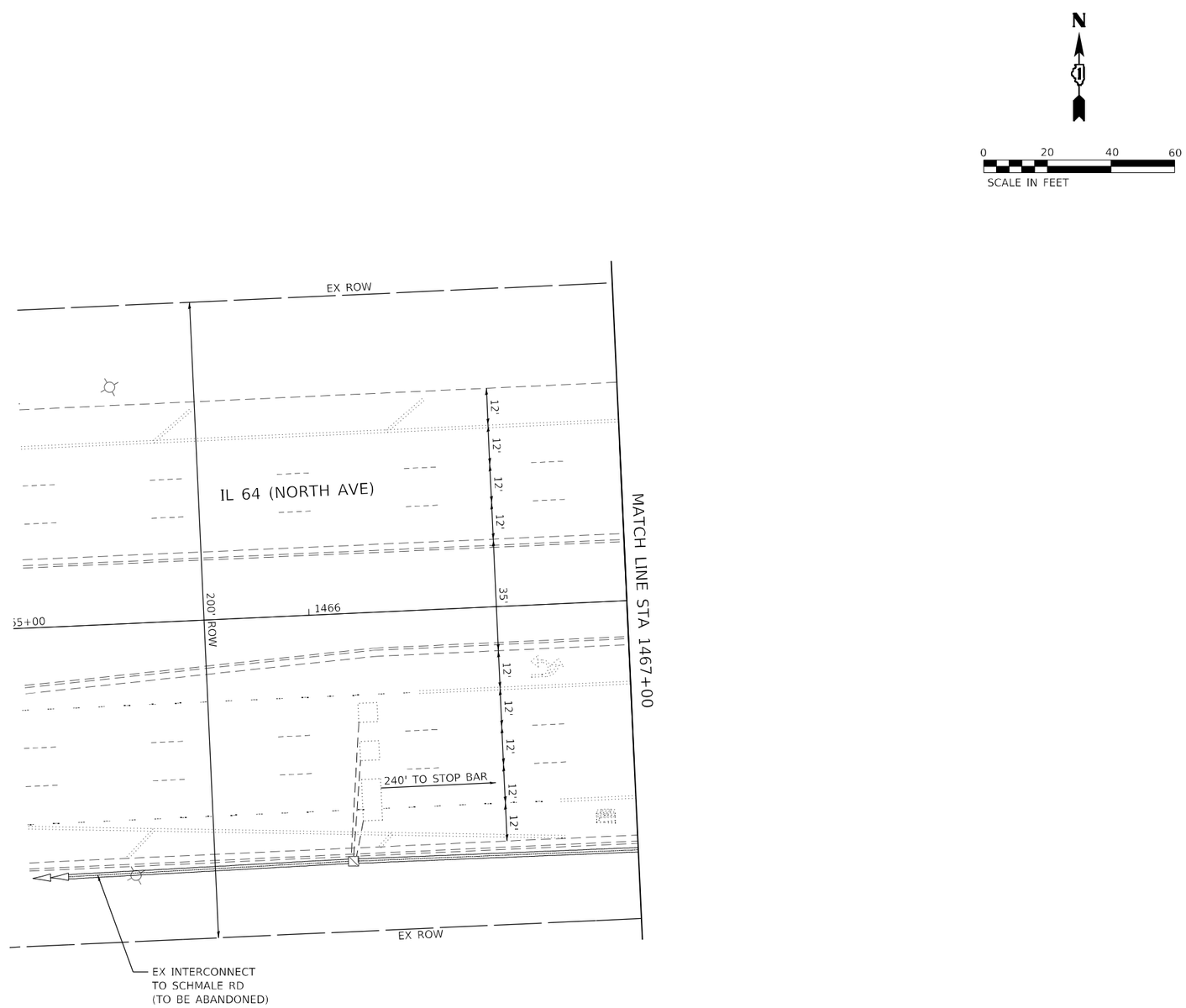

TS 21395
IDOT TACTICS
FORMER EAGLE 2E

MODEL: Default
FILE NAME: pw:\\jk-pw.bentley.com:jk-pw-01\Documents\01 Active Projects\HW-Ch-S-168959100 - IL 64\Phase III\2 Design\CAD\Plan Sheets\Signal\NWest Corridor Signal\D108121-sht4-s84_KHA.dgn

Kimley»Horn
© 2022 KIMLEY-HORN AND ASSOCIATES, INC.
4001 WINFIELD ROAD, SUITE 600
WARRENVILLE, IL 60555
PHONE: 630-487-5550
WWW.KIMLEY-HORN.COM

USER NAME =	DESIGNED -	REVISED -	
	DRAWN -	REVISED -	
PLOT SCALE =	CHECKED -	REVISED -	
PLOT DATE =	DATE -	REVISED -	

STATE OF ILLINOIS
DEPARTMENT OF TRANSPORTATION

TRAFFIC SIGNAL EQUIPMENT REMOVAL PLAN
IL 64 (NORTH AVE) AND PRESIDENT ST

SCALE: 1" = 20' | SHEET OF SHEETS | STA. TO STA.

F.A.P. RTE.	SECTION	COUNTY	TOTAL SHEETS	SHEET NO.
307	2020-263-SUR,SW&TS	DUPAGE	529	185
		CONTRACT NO. 62N33		
	ILLINOIS	FED. AID PROJECT		

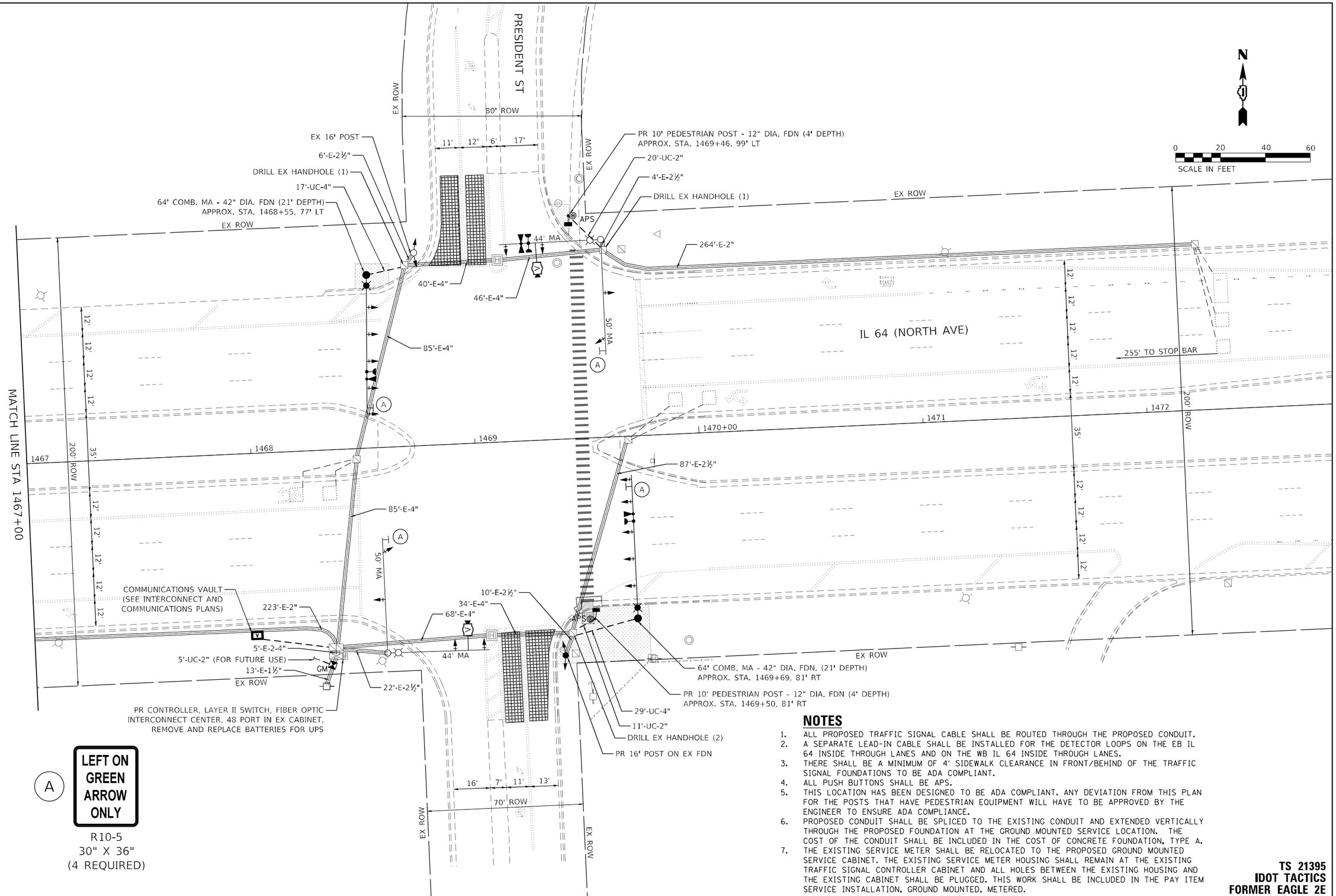

A

LEFT ON GREEN ARROW ONLY

R10-5
30" X 36"
(4 REQUIRED)

NOTES

1. ALL PROPOSED TRAFFIC SIGNAL CABLE SHALL BE ROUTED THROUGH THE PROPOSED CONDUIT.
2. A SEPARATE LEAD-IN CABLE SHALL BE INSTALLED FOR THE DETECTOR LOOPS ON THE EB IL 64 INSIDE THROUGH LANES AND ON THE WB IL 64 INSIDE THROUGH LANES.
3. THERE SHALL BE A MINIMUM OF 4' SIDEWALK CLEARANCE IN FRONT/BEHIND OF THE TRAFFIC SIGNAL FOUNDATIONS TO BE ADA COMPLIANT.
4. ALL PUSH BUTTONS SHALL BE APS.
5. THIS LOCATION HAS BEEN DESIGNED TO BE ADA COMPLIANT. ANY DEVIATION FROM THIS PLAN FOR THE POSTS THAT HAVE PEDESTRIAN EQUIPMENT WILL HAVE TO BE APPROVED BY THE ENGINEER TO ENSURE ADA COMPLIANCE.
6. PROPOSED CONDUIT SHALL BE SPLICED TO THE EXISTING CONDUIT AND EXTENDED VERTICALLY THROUGH THE PROPOSED FOUNDATION AT THE GROUND MOUNTED SERVICE LOCATION. THE COST OF THE CONDUIT SHALL BE INCLUDED IN THE COST OF CONCRETE FOUNDATION, TYPE A.
7. THE EXISTING SERVICE METER SHALL BE RELOCATED TO THE PROPOSED GROUND MOUNTED SERVICE CABINET. THE EXISTING SERVICE METER HOUSING SHALL REMAIN AT THE EXISTING TRAFFIC SIGNAL CONTROLLER CABINET AND ALL HOLES BETWEEN THE EXISTING HOUSING AND THE EXISTING CABINET SHALL BE PLUGGED. THIS WORK SHALL BE INCLUDED IN THE PAY ITEM SERVICE INSTALLATION, GROUND MOUNTED, METERED.

TS 21395
IDOT TACTICS
FORMER EAGLE 2E

MODEL: Default
FILE NAME: pw:\\kh-pw.bentley.com:kh-pw-01\Documents\01 Active Projects\HWC-Ch-S-1689959100 - IL 64\Phase III\2 Design\CAD\Plan Sheets\Signal\Signal\D108121-sht4-ss-85_KHA.dgn

Kimley»Horn
© 2022 KIMLEY-HORN AND ASSOCIATES, INC.
4201 WINFIELD ROAD, SUITE 600
WARRENVILLE, IL 60555
PHONE: 630-487-5550
WWW.KIMLEY-HORN.COM

USER NAME =	DESIGNED -	REVISED -	
	DRAWN -	REVISED -	
PLOT SCALE =	CHECKED -	REVISED -	
PLOT DATE =	DATE -	REVISED -	

STATE OF ILLINOIS
DEPARTMENT OF TRANSPORTATION

TRAFFIC SIGNAL MODERNIZATION PLAN
IL 64 (NORTH AVE) AND PRESIDENT ST

SCALE: 1" = 20' | SHEET OF SHEETS | STA. TO STA.

F.A.P. RTE.	SECTION	COUNTY	TOTAL SHEETS	SHEET NO.
307	2020-263-SUR,SW&TS	DUPAGE	529	186
		CONTRACT NO. 62N33		
	ILLINOIS	FED. AID PROJECT		

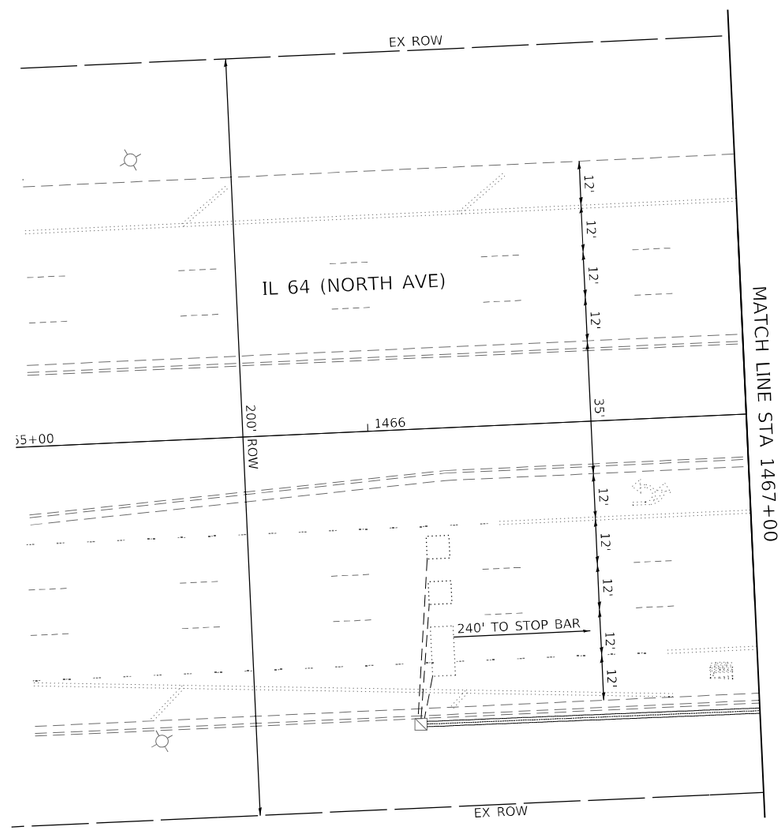

N

0 20 40 60
SCALE IN FEET

TS 21395
IDOT TACTICS
FORMER EAGLE 2E

MODEL: Default
FILE NAME: pw:\\jk-pw.kimley.com:ch-pw-01\Documents\01 Active Projects\HW-Ch-S-168959100 - IL 64\Phase III-2 Design\CAD\Plan Sheets\Sign\NWest Corridor Sign\D108121-sht4-s86_KHA.dgn

Kimley»Horn
© 2023 KIMLEY-HORN AND ASSOCIATES, INC.
4001 WINFIELD ROAD, SUITE 603
WARRENVILLE, IL 60555
PHONE: 630-487-5550
WWW.KIMLEY-HORN.COM

USER NAME =	DESIGNED -	REVISED -
	DRAWN -	REVISED -
PLOT SCALE =	CHECKED -	REVISED -
PLOT DATE =	DATE -	REVISED -

STATE OF ILLINOIS
DEPARTMENT OF TRANSPORTATION

TRAFFIC SIGNAL MODERNIZATION PLAN
IL 64 (NORTH AVE) AND PRESIDENT ST

SCALE: 1" = 20' | SHEET OF SHEETS | STA. TO STA.

F.A.P. RTE.	SECTION	COUNTY	TOTAL SHEETS	SHEET NO.
307	2020-263-SUR,SW&TS	DUPAGE	529	187
		CONTRACT NO. 62N33		
	ILLINOIS	FED. AID PROJECT		

EXISTING CONTROLLER SEQUENCE

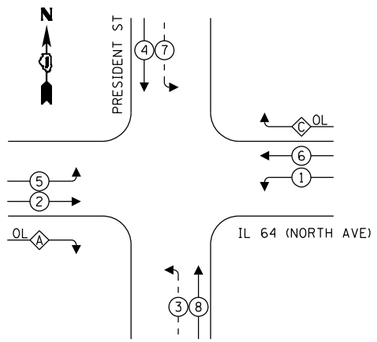

PROPOSED CONTROLLER SEQUENCE

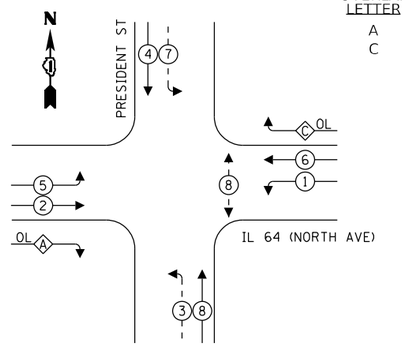

OVERLAP LETTER		PERMISSIVE PHASE		PROTECTED PHASE
A	=	2	+	3
C	=	6	+	7

EXISTING AND PROPOSED EMERGENCY VEHICLE PREEMPTION SEQUENCE

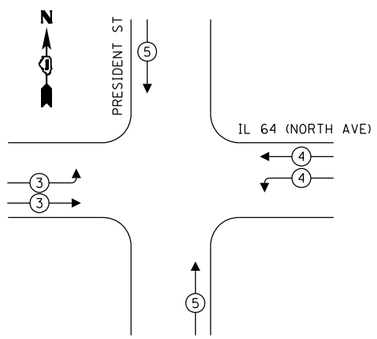

LEGEND:

- PROTECTED PHASE
- PROTECTED/PERMITTED PHASE
- PEDESTRIAN PHASE
- OVERLAP

TRAFFIC SIGNAL ELECTRICAL SERVICE REQUIREMENTS

TYPE		QUANTITY	UNIT WATTAGE	TOTAL WATTAGE
SIGNAL HEAD	1 OR 3-SECTION	14	11	154
	4-SECTION	-	14	-
	5-SECTION	8	13	104
PROGRAMMABLE	3-SECTION	-	22	-
	4-SECTION	-	32	-
	5-SECTION	-	28	-
PEDESTRIAN SIGNAL		2	15	30
CONTROLLER		1	150	150
MASTER CONTROLLER		-	100	-
UPS		1	25	25
DETECTION	RADAR OR VIDEO	2	20	40
BLANK-OUT SIGN		-	25	-
NETWORK SWITCH	II OR III	1	35	35
CELLULAR MODEM		-	15	-
	TOTAL UPS SIZING			538
UPS CHARGING		1	225	225
BATTERY HEATER MAT		1	180	180
CABINET HEATER		1	200	200
FLASHER		-	15	-
LED STREET NAME SIGN		-	120	-
LUMINAIRE		4	240	960
	TOTAL SERVICE WIRE SIZING			2103

LEGEND:

* = ROADWAY LIGHTING CABLE

ENERGY COSTS TO:
ILLINOIS DEPARTMENT OF TRANSPORTATION
201 W CENTER CT
SCHAUMBURG, IL 60196

ENERGY SUPPLY: COMPANY: COMED
PHONE: (866) 639-3532
ACCOUNT NUMBER: 00940-45191

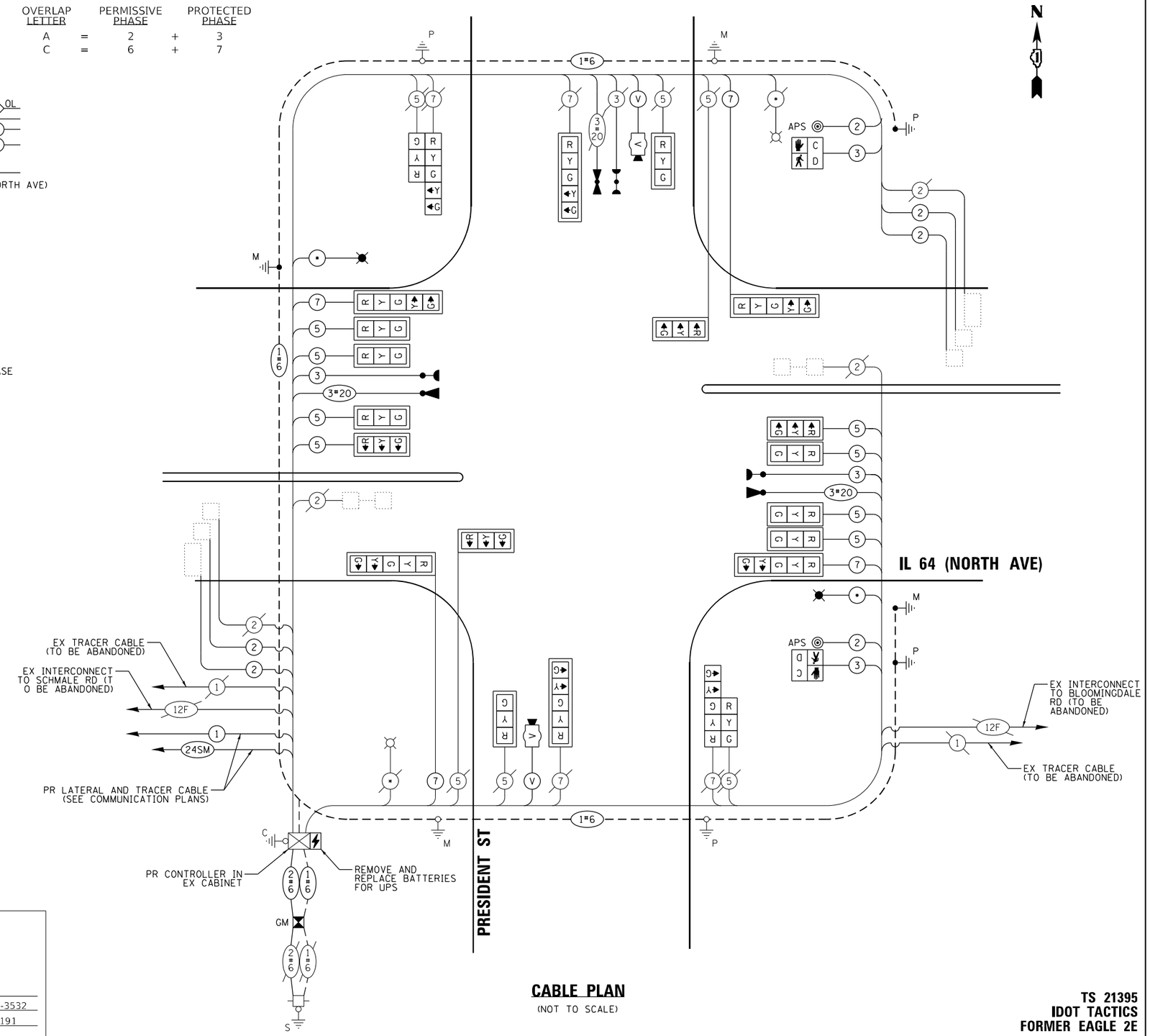

CABLE PLAN

(NOT TO SCALE)

TS 21395
IDOT TACTICS
FORMER EAGLE 2E

MODEL: Default
FILE NAME: pw:\\khi-pw.bentley.com:khi-pw01\Documents\01 Active Projects\MW-CHS-1689591\00 - IL 64\Phase III\2 Design\CAD\Plan Sheets\Signal\West Corridor Signal\01\08321-sht4-87 KHA.dgn

Kimley»Horn
© 2022 KIMLEY-HORN AND ASSOCIATES, INC.
4201 WINFIELD ROAD, SUITE 600
WARRENVILLE, IL 60555
PHONE: 630-487-5550
WWW.KIMLEY-HORN.COM

USER NAME =	DESIGNED -	REVISED -	
	DRAWN -	REVISED -	
PLOT SCALE =	CHECKED -	REVISED -	
PLOT DATE =	DATE -	REVISED -	

STATE OF ILLINOIS
DEPARTMENT OF TRANSPORTATION

CABLE PLAN, PHASE DESIGNATION DIAGRAM, AND EMERGENCY VEHICLE PREEMPTION SEQUENCE
IL 64 (NORTH AVE) AND PRESIDENT ST

SCALE: N.T.S. | SHEET OF SHEETS | STA. TO STA.

F.A.P. RTE.	SECTION	COUNTY	TOTAL SHEETS	SHEET NO.
307	2020-263-SUR,SW&TS	DUPAGE	529	188
		CONTRACT NO. 62N33		
		ILLINOIS	FED. AID PROJECT	

SIGN PANEL – TYPE 1 OR TYPE 2

ALL DIMENSIONS ARE IN INCHES UNLESS OTHERWISE NOTED

DESIGN SERIES	AREA (SQ FT)	SIGN PANEL TYPE	SHEETING TYPE	QTY. REQUIRED
D	12.5	2	ZZ	2

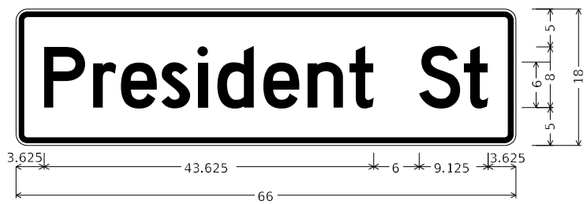

DESIGN SERIES	AREA (SQ FT)	SIGN PANEL TYPE	SHEETING TYPE	QTY. REQUIRED
D	8.25	1	ZZ	2

SCHEDULE OF QUANTITIES

	ITEM DESCRIPTION	UNIT	QUANTITY
	SIGN PANEL - TYPE 1	SQ FT	46.5
	SIGN PANEL - TYPE 2	SQ FT	25.0
	UNDERGROUND CONDUIT, GALVANIZED STEEL, 2" DIA.	FOOT	36
	UNDERGROUND CONDUIT, GALVANIZED STEEL, 4" DIA.	FOOT	46
	MAINTENANCE OF EXISTING TRAFFIC SIGNAL INSTALLATION	EACH	1
	ELECTRIC CABLE IN CONDUIT, SIGNAL NO. 14 2C	FOOT	509
	ELECTRIC CABLE IN CONDUIT, SIGNAL NO. 14 3C	FOOT	509
	ELECTRIC CABLE IN CONDUIT, SIGNAL NO. 14 5C	FOOT	2870
	ELECTRIC CABLE IN CONDUIT, SIGNAL NO. 14 7C	FOOT	1052
	ELECTRIC CABLE IN CONDUIT, LEAD-IN, NO. 14 1 PAIR	FOOT	1506
	ELECTRIC CABLE IN CONDUIT, SERVICE, NO. 6 2 C	FOOT	24
	ELECTRIC CABLE IN CONDUIT, EQUIPMENT GROUNDING CONDUCTOR, NO. 6 1C	FOOT	70
	TRAFFIC SIGNAL POST, GALVANIZED STEEL 16 FT.	EACH	1
	STEEL COMBINATION MAST ARM ASSEMBLY AND POLE 64 FT.	EACH	2
	CONCRETE FOUNDATION, TYPE A	FOOT	4
	CONCRETE FOUNDATION, TYPE E 42-INCH DIAMETER	FOOT	42
	DRILL EXISTING HANDHOLE	EACH	4
	SIGNAL HEAD, LED, 1-FACE, 3-SECTION, MAST-ARM MOUNTED	EACH	12
	SIGNAL HEAD, LED, 1-FACE, 3-SECTION, BRACKET MOUNTED	EACH	2
	SIGNAL HEAD, LED, 1-FACE, 5-SECTION, BRACKET MOUNTED	EACH	2
	SIGNAL HEAD, LED, 1-FACE, 5-SECTION, MAST-ARM MOUNTED	EACH	6
	PEDESTRIAN SIGNAL HEAD, LED, 1-FACE, BRACKET MOUNTED WITH COUNTDOWN TIMER	EACH	2
	TRAFFIC SIGNAL BACKPLATE, LOUVERED, FORMED PLASTIC	EACH	18
	INDUCTIVE LOOP DETECTOR	EACH	4
*	LIGHT DETECTOR	EACH	4
*	LIGHT DETECTOR AMPLIFIER	EACH	1
	REMOVE EXISTING TRAFFIC SIGNAL EQUIPMENT	EACH	1
	REMOVE EXISTING CONCRETE FOUNDATION	EACH	5
*	EMERGENCY VEHICLE PRIORITY SYSTEM LINE SENSOR CABLE, NO. 20 3/C	FOOT	574
	SERVICE INSTALLATION, GROUND MOUNTED, METERED	EACH	1
	LAYER II (DATALINK) SWITCH	EACH	1
	TERMINATE FIBER IN CABINET	EACH	12
	PEDESTRIAN SIGNAL POST, 10 FT.	EACH	2
	TACTICS LICENSE EXPANSION	EACH	1
	FULL-ACTUATED CONTROLLER IN EXISTING CABINET	EACH	1
	REMOVE AND REPLACE BATTERIES FOR UNINTERUPTABLE POWER SUPPLY, EXTENDED	EACH	1
	FIBER OPTIC INTERCONNECT CENTER, 48 PORT	EACH	1
	ACCESSIBLE PEDESTRIAN SIGNALS	EACH	2
	CONCRETE FOUNDATION, TYPE A 12-INCH DIAMETER	FOOT	8
	LED SIGNAL FACE, LENS COVER	EACH	22
	VIDEO VEHICLE DETECTION SYSTEM, SINGLE APPROACH	EACH	2

* - 100% COST TO THE VILLAGE OF GLENDALE HEIGHTS

TS 21395
IDOT TACTICS
FORMER EAGLE 2E

MODEL: Default
FILE NAME: pw:\\uh-pw.bentley.com:sh-pw-01\Documents\01 Active Projects\MVCH-168959100 - IL 64\Phase III\2 Design\CAD\Plan Sheets\Signal\WVest Corridor Signal\D108121-sht4-sht8_KHA.dgn

Kimley»Horn
© 2022 KIMLEY-HORN AND ASSOCIATES, INC.
4201 WINFIELD ROAD, SUITE 600
WARRENVILLE, IL 60555
PHONE: 630-487-5550
WWW.KIMLEY-HORN.COM

USER NAME =	DESIGNED -	REVISED -	
	DRAWN -	REVISED -	
PLOT SCALE =	CHECKED -	REVISED -	
PLOT DATE =	DATE -	REVISED -	

STATE OF ILLINOIS
DEPARTMENT OF TRANSPORTATION

MAST ARM MOUNTED STREET NAME SIGNS AND SCHEDULE OF QUANTITIES
IL 64 (NORTH AVE) AND PRESIDENT ST

SCALE: N.T.S. | SHEET OF SHEETS | STA. TO STA.

F.A.P. RTE.	SECTION	COUNTY	TOTAL SHEETS	SHEET NO.
307	2020-263-SUR,SW&TS	DUPAGE	529	189
		CONTRACT NO. 62N33		
		ILLINOIS	FED. AID PROJECT	

REMOVAL NOTES

THE FOLLOWING ITEMS SHALL BE REMOVED BY THE CONTRACTOR AND SHALL BE DISPOSED OF BY THEM OUTSIDE THE RIGHT-OF-WAY AT THEIR EXPENSE. THE SALVAGE VALUE OF THE REMOVED EQUIPMENT SHALL BE REFLECTED IN CONTRACT BID PRICE.

20	EACH	3-SECTION SIGNAL HEAD
4	EACH	5-SECTION SIGNAL HEAD
1	EACH	CONTROLLER (M52)
4	EACH	STREET NAME SIGN PANEL
14	EACH	TRAFFIC SIGNAL BACKPLATE
2	EACH	COMBINATION DUAL MAST ARM ASSEMBLY AND POLE
2	EACH	COMBINATION MAST ARM ASSEMBLY AND POLE

RELOCATION NOTES

THE FOLLOWING EXISTING TRAFFIC SIGNAL EQUIPMENT SHALL BE REMOVED BY THE CONTRACTOR, SAFELY STORED AND RELOCATED TO THE PROPOSED MAST ARMS, POSTS, AND TRAFFIC SIGNAL CONTROLLER CABINET.

4	EACH	CONFIRMATION BEACON
4	EACH	LIGHT DETECTOR

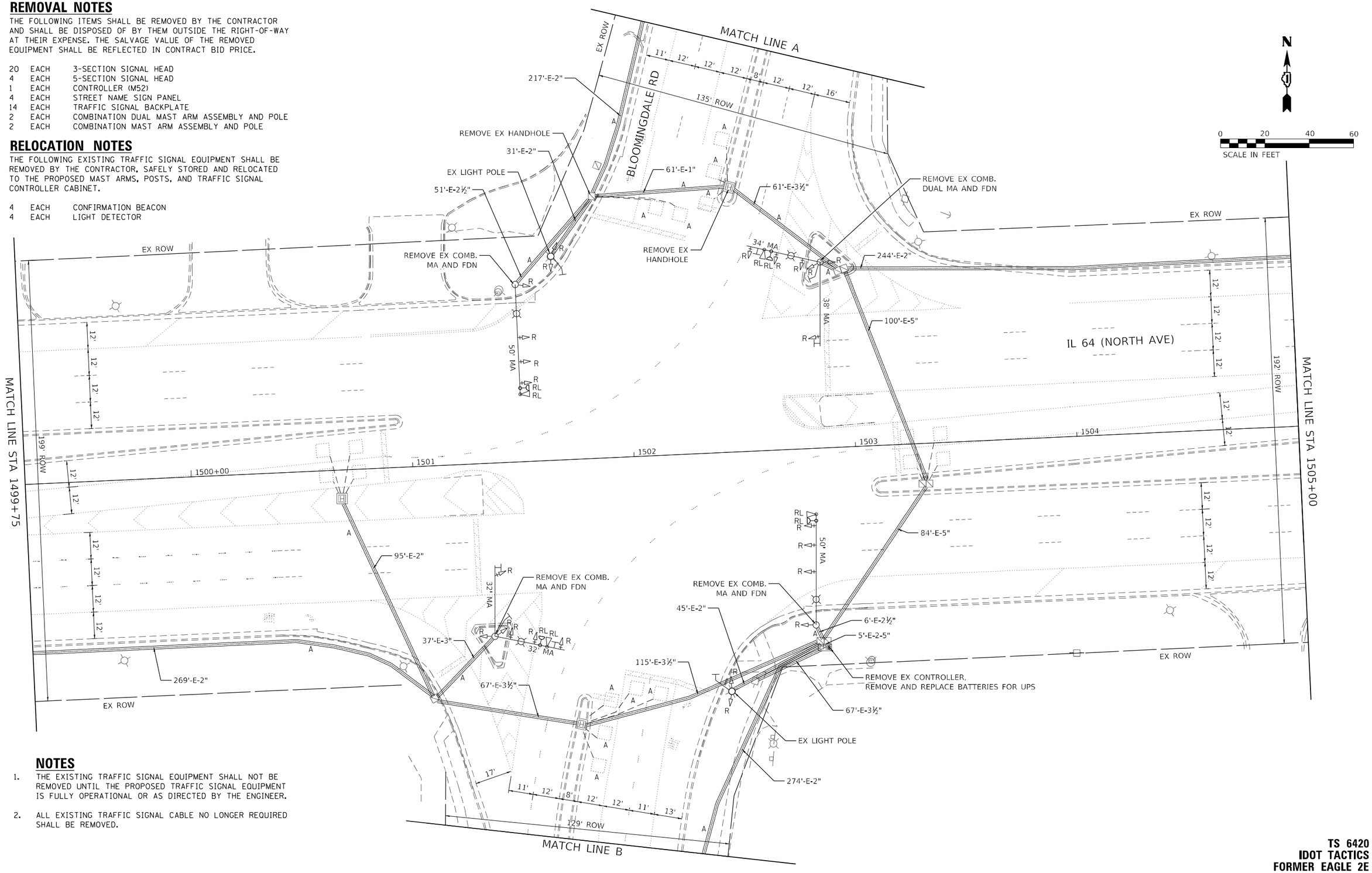

NOTES

1. THE EXISTING TRAFFIC SIGNAL EQUIPMENT SHALL NOT BE REMOVED UNTIL THE PROPOSED TRAFFIC SIGNAL EQUIPMENT IS FULLY OPERATIONAL OR AS DIRECTED BY THE ENGINEER.
2. ALL EXISTING TRAFFIC SIGNAL CABLE NO LONGER REQUIRED SHALL BE REMOVED.

TS 6420
IDOT TACTICS
FORMER EAGLE 2E

MODEL: Default
FILE NAME: pw:\\uh-pw.bentley.com:uh-pw-01\Documents\01 Active Projects\MV-CI-S-168959100 - IL 64\Phase II\2 Design\CADD\Plan Sheets\Signal\West Corridor Signal\D1081213-int1-89 #14A.dgn

Kimley»Horn
© 2022 KIMLEY-HORN AND ASSOCIATES, INC.
4201 WINFIELD ROAD, SUITE 600
WARRENVILLE, IL 60555
PHONE: 630-487-5550
WWW.KIMLEY-HORN.COM

USER NAME =	DESIGNED -	REVISED -
	DRAWN -	REVISED -
PLOT SCALE =	CHECKED -	REVISED -
PLOT DATE =	DATE -	REVISED -

STATE OF ILLINOIS
DEPARTMENT OF TRANSPORTATION

TRAFFIC SIGNAL EQUIPMENT REMOVAL PLAN
IL 64 (NORTH AVE) AND BLOOMINGDALE RD

SCALE: 1" = 20' | SHEET OF SHEETS | STA. TO STA.

F.A.P. RTE.	SECTION	COUNTY	TOTAL SHEETS	SHEET NO.
307	2020-263-SUR,SW&TS	DUPAGE	529	190
		CONTRACT NO. 62N33		
	ILLINOIS	FED. AID PROJECT		

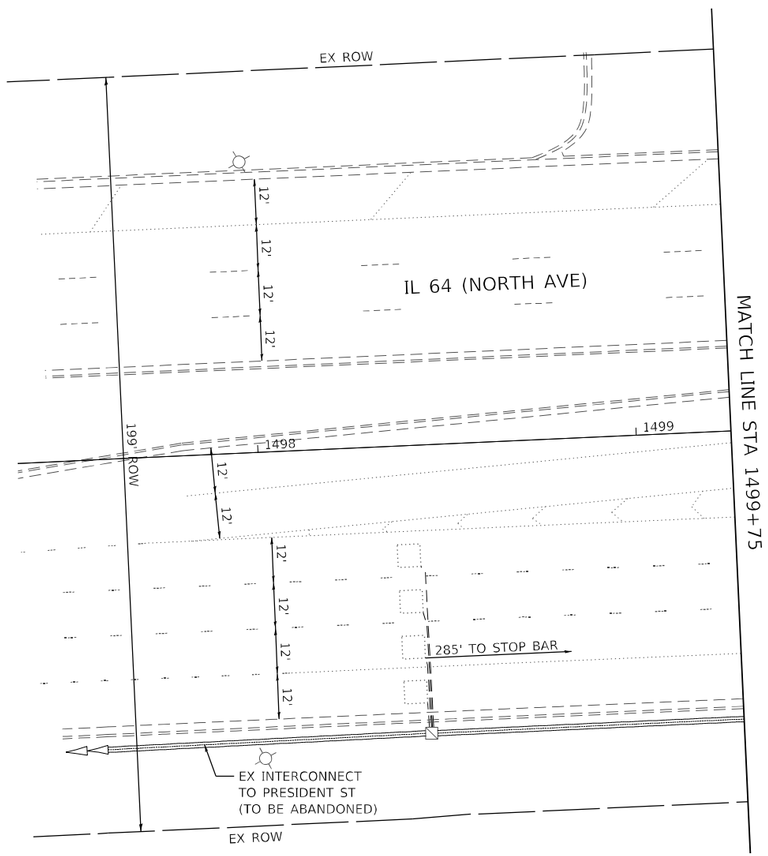

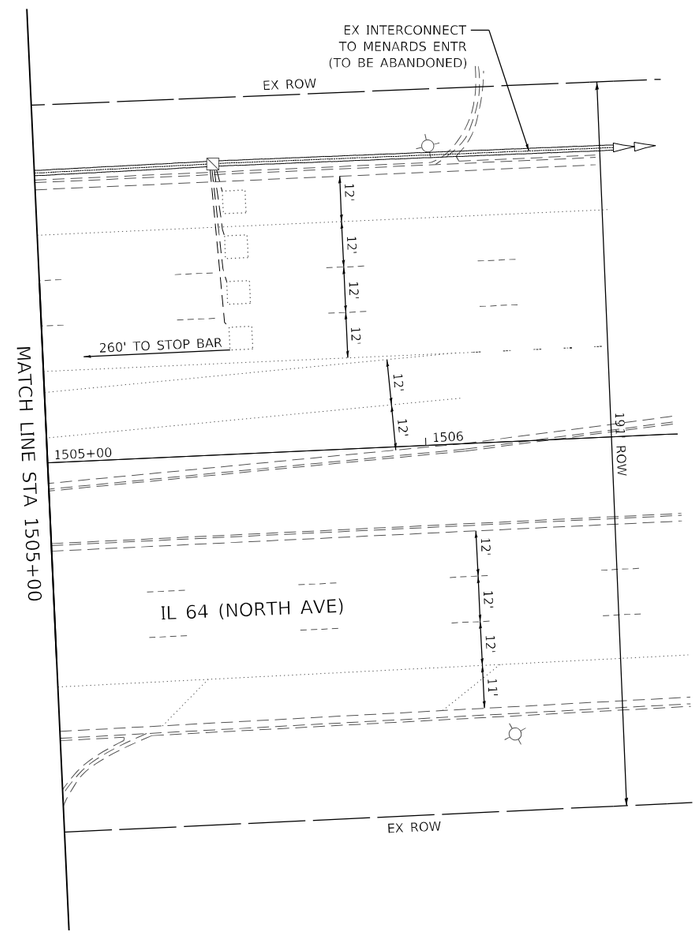

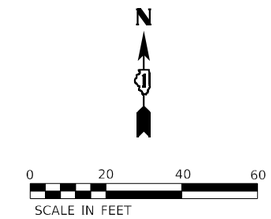

TS 6420
IDOT TACTICS
FORMER EAGLE 2E

MODEL: Default
FILE NAME: pw:\\h-pw.bentley.com:h-pw-01\Documents\01 Active Projects\MW-Cr-S-1689959100 - IL 64\Phase III\2 Design\CADD\Plan Sheets\Signal\West Corridor Signal\D1081212-sht-ts-06-KHA.dgn

Kimley»Horn
© 2023 KIMLEY-HORN AND ASSOCIATES, INC.
4201 WINFIELD ROAD, SUITE 603
WARRENVILLE, IL 60555
PHONE: 630-487-5550
WWW.KIMLEY-HORN.COM

USER NAME =	DESIGNED -	REVISED -
	DRAWN -	REVISED -
PLOT SCALE =	CHECKED -	REVISED -
PLOT DATE =	DATE -	REVISED -

STATE OF ILLINOIS
DEPARTMENT OF TRANSPORTATION

TRAFFIC SIGNAL EQUIPMENT REMOVAL PLAN
IL 64 (NORTH AVE) AND BLOOMINGDALE RD

SCALE: 1" = 20' | SHEET OF SHEETS | STA. TO STA.

F.A.P. RTE.	SECTION	COUNTY	TOTAL SHEETS	SHEET NO.
307	2020-263-SUR,SW&TS	DUPAGE	529	191
		CONTRACT NO. 62N33		
	ILLINOIS	FED. AID PROJECT		

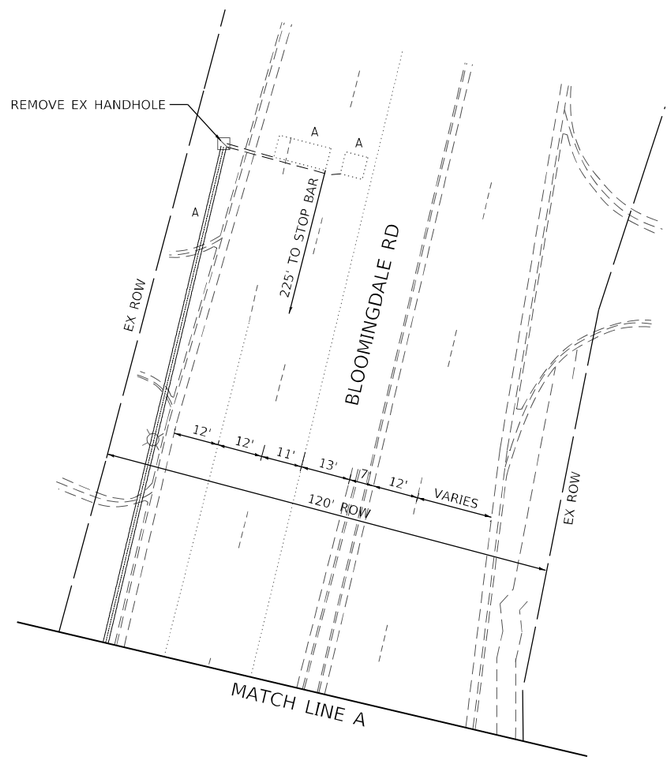

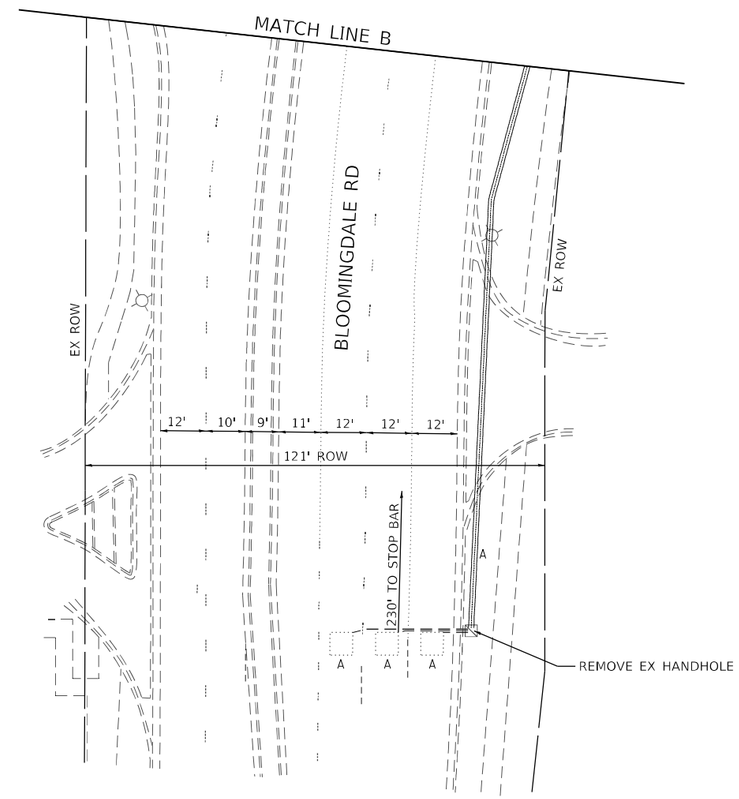

N

0 20 40 60
SCALE IN FEET

TS 6420
IDOT TACTICS
FORMER EAGLE 2E

MODEL: Default
FILE NAME: pw:\\kh-pw.bentley.com:kh-pw401\Documents\01 Active Projects\MW-CHS-1689519.00 - IL 64\Phase III\2 Design\CAD\Plan Sheets\Signals\West Corridor Signals\D108121-sht4-01_KHA.dgn

Kimley»Horn
© 2023 KIMLEY-HORN AND ASSOCIATES, INC.
4201 WINFIELD ROAD, SUITE 500
WARRENVILLE, IL 60555
PHONE: 630-487-5550
WWW.KIMLEY-HORN.COM

USER NAME =	DESIGNED -	REVISED -
	DRAWN -	REVISED -
PLOT SCALE =	CHECKED -	REVISED -
PLOT DATE =	DATE -	REVISED -

STATE OF ILLINOIS
DEPARTMENT OF TRANSPORTATION

TRAFFIC SIGNAL EQUIPMENT REMOVAL PLAN
IL 64 (NORTH AVE) AND BLOOMINGDALE RD

SCALE: 1" = 20' | SHEET OF SHEETS | STA. TO STA.

F.A.P. RTE.	SECTION	COUNTY	TOTAL SHEETS	SHEET NO.
307	2020-263-SUR,SW&TS	DUPAGE	529	192
		CONTRACT NO. 62N33		
		ILLINOIS	FED. AID PROJECT	

NOTES

1. ALL PROPOSED TRAFFIC SIGNAL CABLE SHALL BE ROUTED THROUGH THE PROPOSED CONDUIT.
2. A SEPARATE LEAD-IN CABLE SHALL BE INSTALLED FOR THE DETECTOR LOOPS ON IL 64 (NORTH AVE).
3. THERE SHALL BE A MINIMUM OF 4' SIDEWALK CLEARANCE IN FRONT/BEHIND OF THE TRAFFIC SIGNAL FOUNDATIONS TO BE ADA COMPLIANT.
4. THE SIDEWALK CURBS ON ALL QUADRANTS SHALL BE CUT SO THAT THE POST AND MAST ARM FOUNDATIONS ARE FLUSH WITH THE EDGE OF THE SIDEWALK.
5. ALL PUSH BUTTONS SHALL BE APS.
6. THIS LOCATION HAS BEEN DESIGNED TO BE ADA COMPLIANT. ANY DEVIATION FROM THIS PLAN FOR THE POSTS THAT HAVE PEDESTRIAN EQUIPMENT WILL HAVE TO BE APPROVED BY THE ENGINEER TO ENSURE ADA COMPLIANCE.
7. CONTRACTOR SHALL VERIFY THAT THE PLACEMENT OF THE PROPOSED SIGNAL EQUIPMENT ADJACENT TO EXISTING RAMPS MEET ADA REQUIREMENTS. THE ENGINEER SHALL APPROVE THE PROPOSED LOCATIONS OF THE SIGNAL EQUIPMENT BEFORE INSTALLATION.

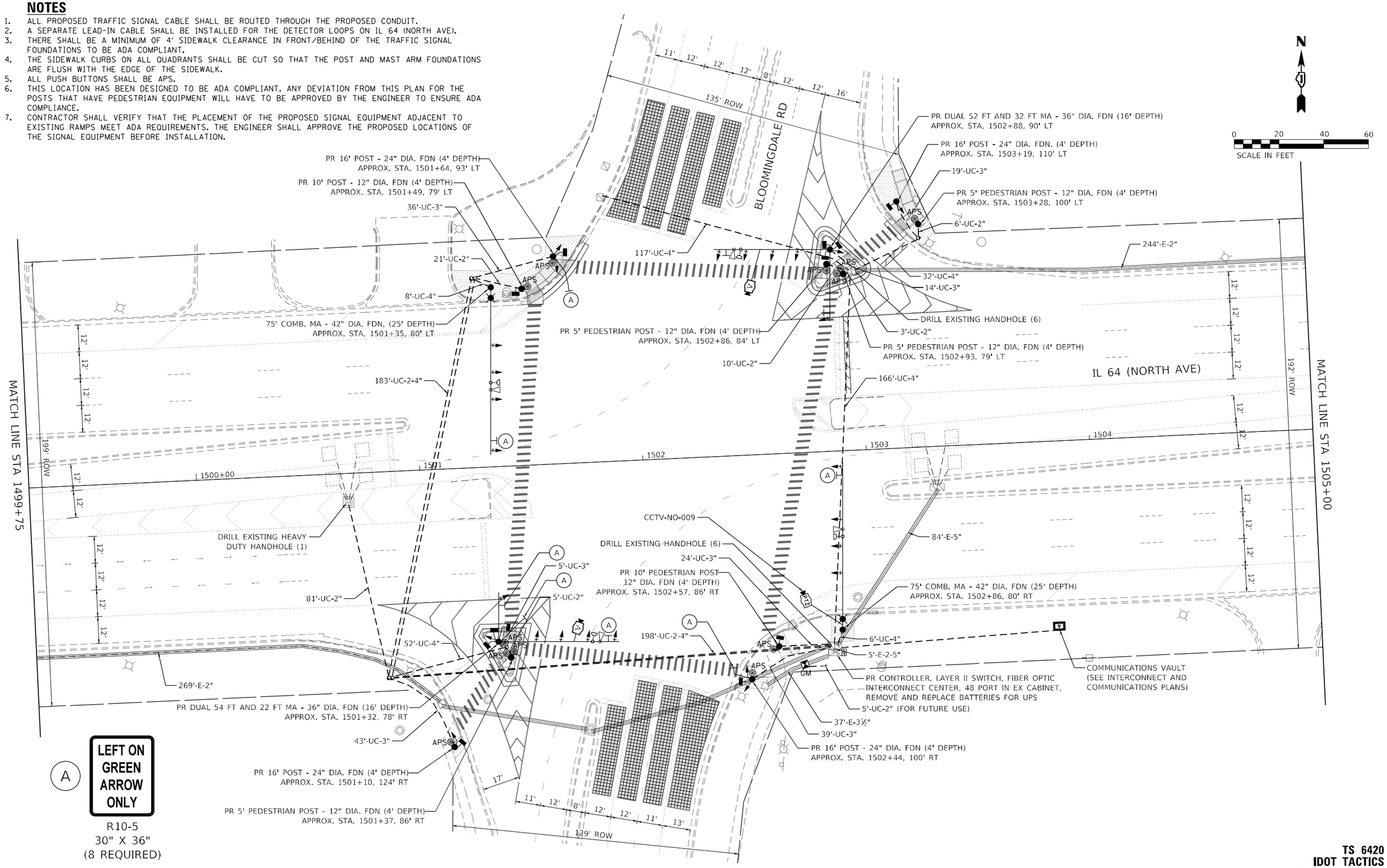

TS 6420
IDOT TACTICS
FORMER EAGLE 2E

MODEL: Default
FILE NAME: pw:\\kh-pw_bentley.com:kh-pw401\Documents\01 Active Projects\MV-Cir-S-68995100 - IL 64\Phase III\2 Design\CAD\Plan Sheets\Signal\West Corridor Signal\D108121-sht4-c-26 KHA.dgn

Kimley»Horn
© 2020 KIMLEY-HORN AND ASSOCIATES, INC.
4201 WINFIELD ROAD, SUITE 600
WARRENVILLE, IL 60555
PHONE: 630-487-5550
WWW.KIMLEY-HORN.COM

USER NAME =	DESIGNED -	REVISED -	
	DRAWN -	REVISED -	
PLOT SCALE =	CHECKED -	REVISED -	
PLOT DATE =	DATE -	REVISED -	

STATE OF ILLINOIS
DEPARTMENT OF TRANSPORTATION

TRAFFIC SIGNAL MODERNIZATION PLAN
IL 64 (NORTH AVE) AND BLOOMINGDALE RD

SCALE: 1" = 20' | SHEET OF SHEETS | STA. TO STA.

F.A.P. RTE.	SECTION	COUNTY	TOTAL SHEETS	SHEET NO.
307	2020-263-SUR,SW&TS	DUPAGE	529	193
		CONTRACT NO. 62N33		
	ILLINOIS	FED. AID PROJECT		

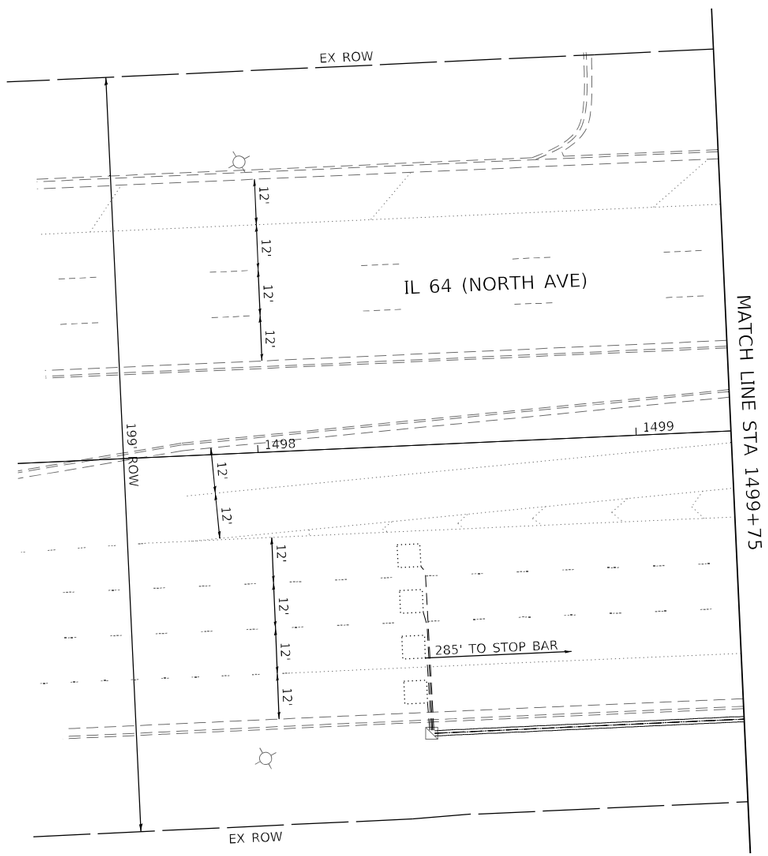

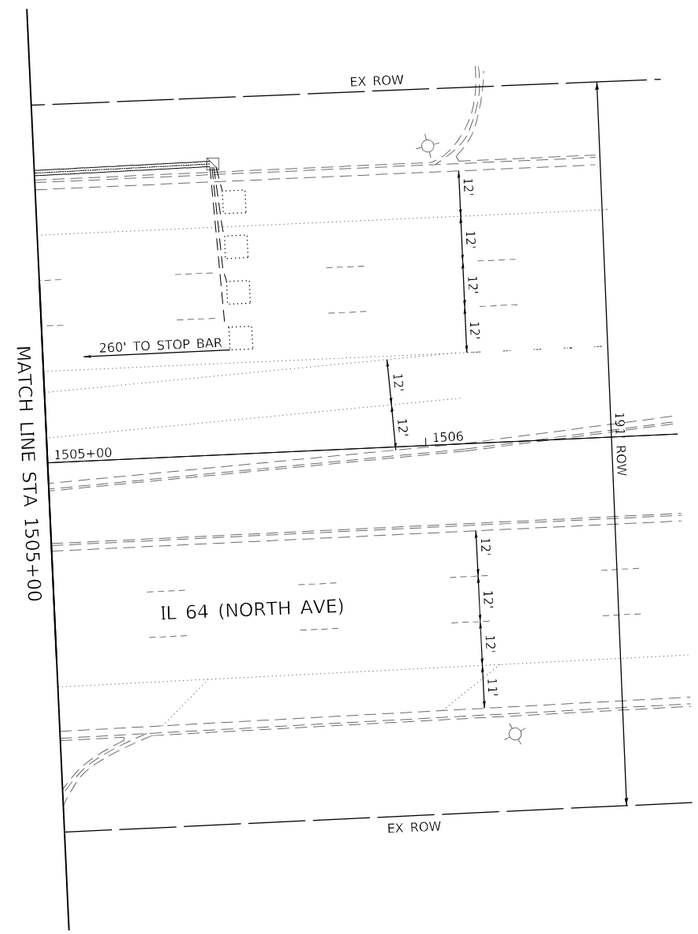

N

0 20 40 60
SCALE IN FEET

TS 6420
IDOT TACTICS
FORMER EAGLE 2E

MODEL: Default
FILE NAME: pw:\\h-pw.bentley.com:h-pw-01\Documents\01 Active Projects\MW-Cr-S-1689593100 - IL 64\Phase II\2 Design\CADD\Plan Sheets\Signal\West Corridor Signal\D1D108121-H14-E3-KHA.dgn

Kimley»Horn
© 2023 KIMLEY-HORN AND ASSOCIATES, INC.
4201 WINFIELD ROAD, SUITE 600
WARRENVILLE, IL 60555
PHONE: 630-487-5550
WWW.KIMLEY-HORN.COM

USER NAME =	DESIGNED -	REVISED -
	DRAWN -	REVISED -
PLOT SCALE =	CHECKED -	REVISED -
PLOT DATE =	DATE -	REVISED -

STATE OF ILLINOIS
DEPARTMENT OF TRANSPORTATION

TRAFFIC SIGNAL MODERNIZATION PLAN
IL 64 (NORTH AVE) AND BLOOMINGDALE RD

SCALE: 1" = 20' | SHEET OF SHEETS | STA. TO STA.

F.A.P. RTE.	SECTION	COUNTY	TOTAL SHEETS	SHEET NO.
307	2020-263-SUR,SW&TS	DUPAGE	529	194
		CONTRACT NO. 62N33		
	ILLINOIS	FED. AID PROJECT		

EXISTING CONTROLLER SEQUENCE

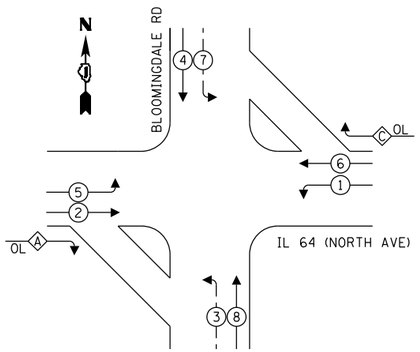

PROPOSED CONTROLLER SEQUENCE

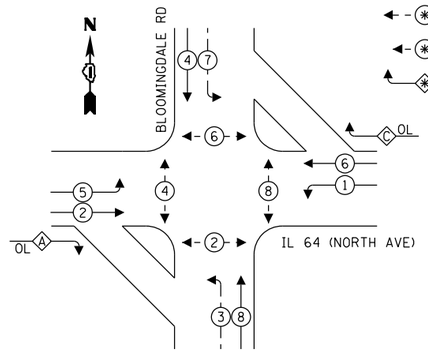

LEGEND:

- PROTECTED PHASE
- PROTECTED/PERMITTED PHASE
- PEDESTRIAN PHASE
- OVERLAP

OVERLAP LETTER		PERMISSIVE PHASE		PROTECTED PHASE
A	=	2	+	3
C	=	6	+	7

EXISTING AND PROPOSED EMERGENCY VEHICLE PREEMPTION SEQUENCE

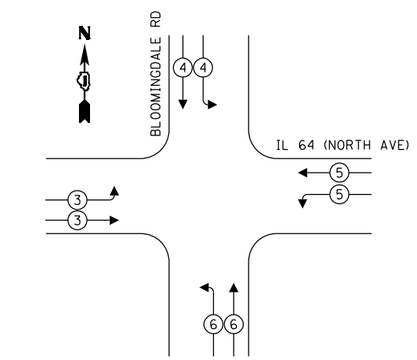

TRAFFIC SIGNAL ELECTRICAL SERVICE REQUIREMENTS

TYPE		QUANTITY	UNIT WATTAGE	TOTAL WATTAGE
SIGNAL HEAD	1 OR 3-SECTION	22	11	242
	4-SECTION	-	14	-
	5-SECTION	4	13	52
PROGRAMMABLE	3-SECTION	-	22	-
	4-SECTION	-	32	-
	5-SECTION	-	28	-
PEDESTRIAN SIGNAL		12	15	180
CONTROLLER		1	150	150
MASTER CONTROLLER		-	100	-
UPS		1	25	25
DETECTION	VIDEO	2	20	40
BLANK-OUT SIGN		-	25	-
NETWORK SWITCH	LAYER II OR III	1	35	35
CELLULAR MODEM		-	15	-
PTZ		1	75	75
		TOTAL UPS SIZING		799
UPS CHARGING		1	225	225
BATTERY HEATER MAT		1	180	180
CABINET HEATER		1	200	200
FLASHER		-	15	-
LED STREET NAME SIGN		-	120	-
LUMINAIRE		-	240	-
		TOTAL SERVICE WIRE SIZING		1404

ENERGY COSTS TO:
ILLINOIS DEPARTMENT OF TRANSPORTATION
201 W CENTER CT
SCHAUMBURG, IL 60196

ENERGY SUPPLY: COMPANY: COMED
PHONE: (866) 639-3532
ACCOUNT NUMBER: 60180-18058

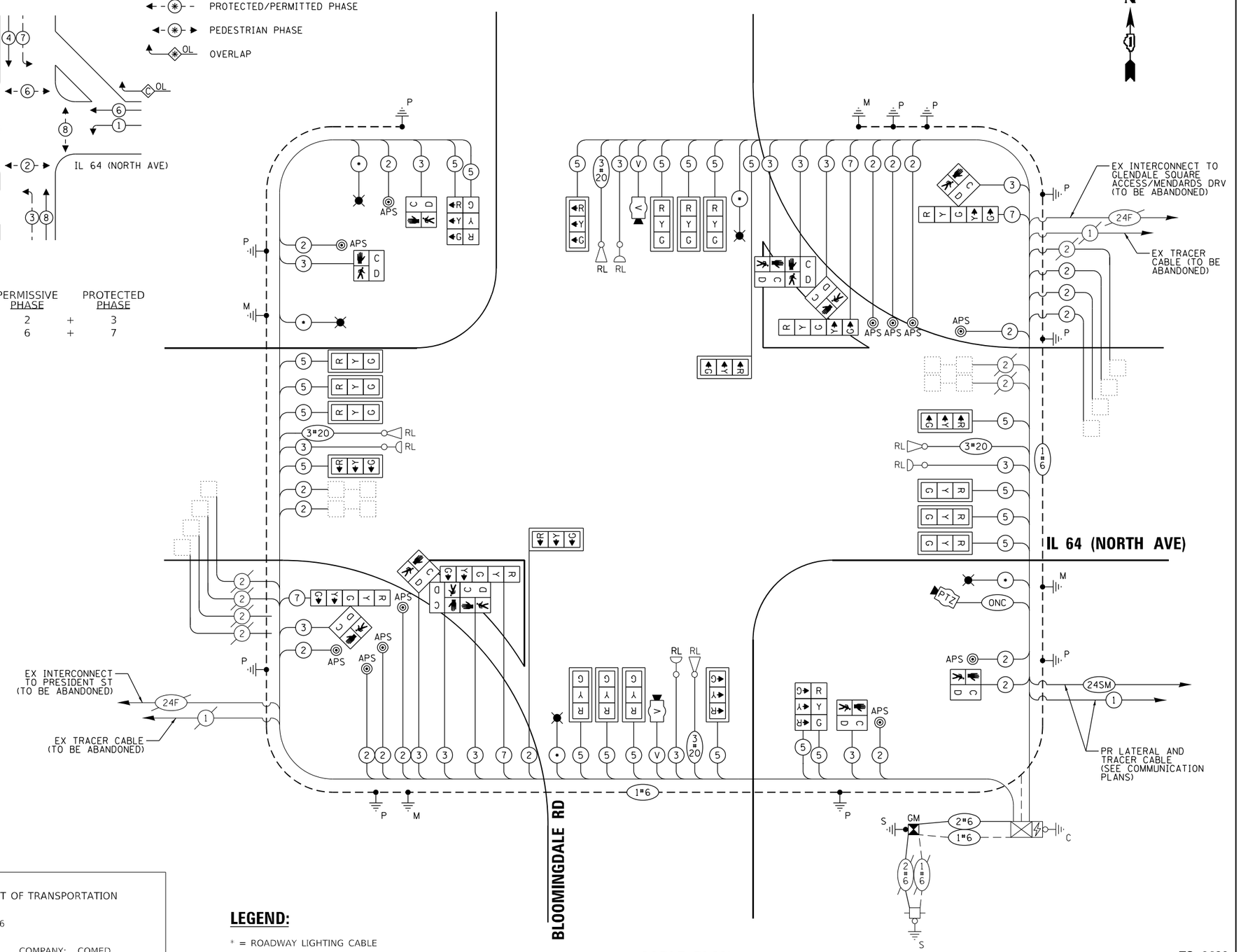

LEGEND:

* = ROADWAY LIGHTING CABLE

CABLE PLAN

(NOT TO SCALE)

TS 6420
IDOT TACTICS
FORMER EAGLE 2E

MODEL: Default
FILE NAME: pw:\\uk-pw.bentley.com:uk-pw-01\Documents\01 Active Projects\MV-CHS-1689591\00 - IL 64\Phase III\2 Design\CAD\Plan Sheets\Signal\WEST Corridor Signal\D1081215-SN14-94_KHA.dgn

Kimley»Horn
© 2022 KIMLEY-HORN AND ASSOCIATES, INC.
4201 WINFIELD ROAD, SUITE 600
WARRENVILLE, IL 60555
PHONE: 630-487-5550
WWW.KIMLEY-HORN.COM

USER NAME =	DESIGNED -	REVISED -	
	DRAWN -	REVISED -	
PLOT SCALE =	CHECKED -	REVISED -	
PLOT DATE =	DATE -	REVISED -	

STATE OF ILLINOIS
DEPARTMENT OF TRANSPORTATION

CABLE PLAN, PHASE DESIGNATION DIAGRAM, AND EMERGENCY VEHICLE PREEMPTION SEQUENCE
IL 64 (NORTH AVE) AND BLOOMINGDALE RD

SCALE: | SHEET OF SHEETS | STA. TO STA.

F.A.P. RTE.	SECTION	COUNTY	TOTAL SHEETS	SHEET NO.
307	2020-263-SUR,SW&TS	DUPAGE	529	195
		CONTRACT NO. 62N33		
		ILLINOIS	FED. AID PROJECT	

SIGN PANEL – TYPE 2

ALL DIMENSIONS ARE IN INCHES UNLESS OTHERWISE NOTED

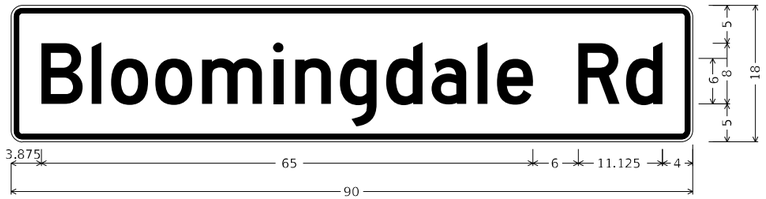

DESIGN SERIES	AREA (SQ FT)	SIGN PANEL TYPE	SHEETING TYPE	QTY. REQUIRED
D	11.25	2	ZZ	2

DESIGN SERIES	AREA (SQ FT)	SIGN PANEL TYPE	SHEETING TYPE	QTY. REQUIRED
D	12.5	2	ZZ	2

SCHEDULE OF QUANTITIES

	ITEM DESCRIPTION	UNIT	QUANTITY
	SIGN PANEL - TYPE 1	SQ FT	60
	SIGN PANEL - TYPE 2	SQ FT	47.5
	UNDERGROUND CONDUIT, GALVANIZED STEEL, 2" DIA.	FOOT	131
	UNDERGROUND CONDUIT, GALVANIZED STEEL, 3" DIA.	FOOT	180
	UNDERGROUND CONDUIT, GALVANIZED STEEL, 4" DIA.	FOOT	1143
	HANDHOLE	EACH	2
	DOUBLE HANDHOLE	EACH	2
	MAINTENANCE OF EXISTING TRAFFIC SIGNAL INSTALLATION	EACH	1
	ELECTRIC CABLE IN CONDUIT, SIGNAL NO. 14 2C	FOOT	3321
	ELECTRIC CABLE IN CONDUIT, SIGNAL NO. 14 3C	FOOT	5064
	ELECTRIC CABLE IN CONDUIT, SIGNAL NO. 14 5C	FOOT	7219
	ELECTRIC CABLE IN CONDUIT, SIGNAL NO. 14 7C	FOOT	1253
	ELECTRIC CABLE IN CONDUIT, LEAD-IN, NO. 14 1 PAIR	FOOT	1815
	ELECTRIC CABLE IN CONDUIT, SERVICE, NO. 6 2 C	FOOT	40
	ELECTRIC CABLE IN CONDUIT, EQUIPMENT GROUNDING CONDUCTOR, NO. 6 1C	FOOT	1494
	TRAFFIC SIGNAL POST, GALVANIZED STEEL 16 FT.	EACH	4
	STEEL MAST ARM ASSEMBLY AND POLE WITH DUAL MAST ARMS, 22 FT. AND 54 FT.	EACH	1
	STEEL MAST ARM ASSEMBLY AND POLE WITH DUAL MAST ARMS, 30 FT. AND 54 FT.	EACH	1
	STEEL COMBINATION MAST ARM ASSEMBLY AND POLE 75 FT.	EACH	2
	CONCRETE FOUNDATION, TYPE A	FOOT	20
	CONCRETE FOUNDATION, TYPE E 36-INCH DIAMETER	FOOT	32
	CONCRETE FOUNDATION, TYPE E 42-INCH DIAMETER	FOOT	50
	DRILL EXISTING HANDHOLE	EACH	13
	SIGNAL HEAD, LED, 1-FACE, 3-SECTION, MAST-ARM MOUNTED	EACH	18
	SIGNAL HEAD, LED, 1-FACE, 3-SECTION, BRACKET MOUNTED	EACH	4
	SIGNAL HEAD, LED, 1-FACE, 5-SECTION, BRACKET MOUNTED	EACH	2
	PEDESTRIAN SIGNAL HEAD, LED, 1-FACE, BRACKET MOUNTED WITH COUNTDOWN TIMER	EACH	12
	TRAFFIC SIGNAL BACKPLATE, LOUVERED, FORMED PLASTIC	EACH	18
	INDUCTIVE LOOP DETECTOR	EACH	5
	RELOCATE EXISTING EMERGENCY VEHICLE PRIORITY SYSTEM, DETECTOR UNIT	EACH	4
*	REMOVE ELECTRIC CABLE FROM CONDUIT	FOOT	16857
	REMOVE EXISTING TRAFFIC SIGNAL EQUIPMENT	EACH	1
	REMOVE EXISTING HANDHOLE	EACH	4
	REMOVE EXISTING CONCRETE FOUNDATION	EACH	4
	CLOSED CIRCUIT TELEVISION DOME CAMERA, HD	EACH	1
*	EMERGENCY VEHICLE PRIORITY SYSTEM LINE SENSOR CABLE, NO. 20 3/C	FOOT	1351
	OUTDOOR RATED NETWORK CABLE	FOOT	135
	SERVICE INSTALLATION, GROUND MOUNTED, METERED	EACH	1
	REMOTE CONTROLLED VIDEO SYSTEM	EACH	1
	LAYER II (DATALINK) SWITCH	EACH	1
	TERMINATE FIBER IN CABINET	EACH	12
	PEDESTRIAN SIGNAL POST, 10 FT.	EACH	2
	PEDESTRIAN SIGNAL POST, 5 FT.	EACH	4
	TACTICS LICENSE EXPANSION	EACH	1
	FULL-ACTUATED CONTROLLER IN EXISTING CABINET	EACH	1
	REMOVE AND REPLACE BATTERIES FOR UNINTERUPTABLE POWER SUPPLY, EXTENDED	EACH	1
	FIBER OPTIC INTERCONNECT CENTER, 48 PORT	EACH	1
	ACCESSIBLE PEDESTRIAN SIGNALS	EACH	12
	CONCRETE FOUNDATION, TYPE A 12-INCH DIAMETER	FOOT	24
	LED SIGNAL FACE, LENS COVER	EACH	26
	VIDEO VEHICLE DETECTION SYSTEM, SINGLE APPROACH	EACH	2
	CAMERA MOUNTING ASSEMBLY	EACH	1

* - 100% COST TO THE VILLAGE OF GLENDALE HEIGHTS

TS 6420
IDOT TACTICS
FORMER EAGLE 2E

MODEL: Default
FILE NAME: pw:\\h-pw.bentley.com:h-pw-01\Documents\01 Active Projects\MW-Cr-S-1689939100 - IL 64\Phase II\2 Design\CADD\Plan Sheets\Signal\NWest Corridor Signal\D108121-sht-ts-95_Kha.dgn

Kimley»Horn
© 2023 KIMLEY-HORN AND ASSOCIATES, INC.
4001 WARRENVILLE ROAD, SUITE 603
WARRENVILLE, IL 60555
PHONE: 630-487-5550
WWW.KIMLEY-HORN.COM

USER NAME =	DESIGNED -	REVISED -	
	DRAWN -	REVISED -	
PLOT SCALE =	CHECKED -	REVISED -	
PLOT DATE =	DATE -	REVISED -	

STATE OF ILLINOIS
DEPARTMENT OF TRANSPORTATION

MAST ARM MOUNTED STREET NAME SIGNS AND SCHEDULE OF QUANTITIES
IL 64 (NORTH AVE) AND BLOOMINGDALE RD

SCALE: N.T.S. | SHEET OF SHEETS | STA. TO STA.

F.A.P. RTE.	SECTION	COUNTY	TOTAL SHEETS	SHEET NO.
307	2020-263-SUR,SW&TS	DUPAGE	529	196
		CONTRACT NO. 62N33		
	ILLINOIS	FED. AID PROJECT		

NOTES

1. THE EXISTING TRAFFIC SIGNAL EQUIPMENT SHALL NOT BE REMOVED UNTIL THE PROPOSED TRAFFIC SIGNAL EQUIPMENT IS FULLY OPERATIONAL OR AS DIRECTED BY THE ENGINEER.
2. ALL EXISTING TRAFFIC SIGNAL CABLE NO LONGER REQUIRED SHALL BE REMOVED.

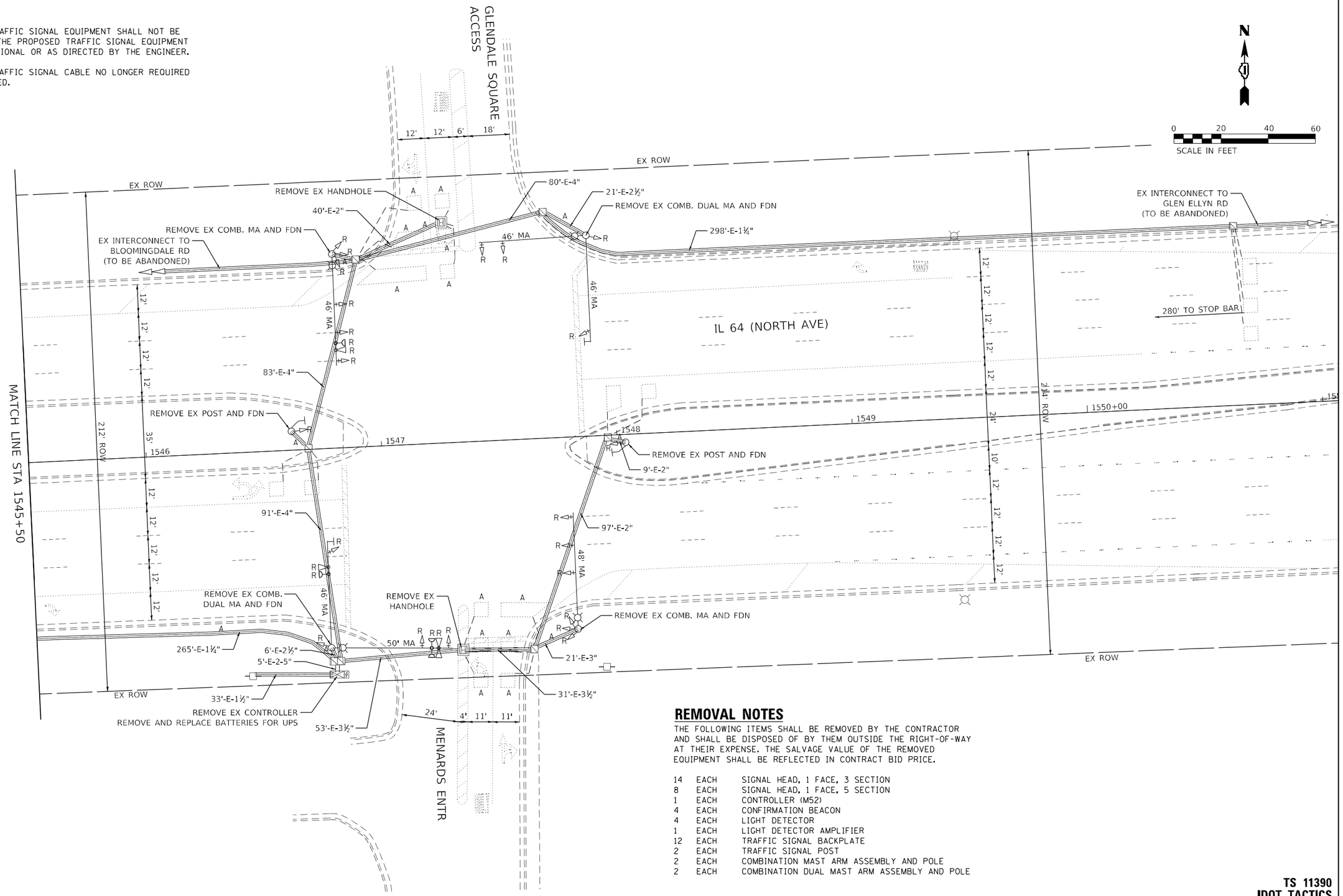

REMOVAL NOTES

THE FOLLOWING ITEMS SHALL BE REMOVED BY THE CONTRACTOR AND SHALL BE DISPOSED OF BY THEM OUTSIDE THE RIGHT-OF-WAY AT THEIR EXPENSE. THE SALVAGE VALUE OF THE REMOVED EQUIPMENT SHALL BE REFLECTED IN CONTRACT BID PRICE.

14	EACH	SIGNAL HEAD, 1 FACE, 3 SECTION
8	EACH	SIGNAL HEAD, 1 FACE, 5 SECTION
1	EACH	CONTROLLER (M52)
4	EACH	CONFIRMATION BEACON
4	EACH	LIGHT DETECTOR
1	EACH	LIGHT DETECTOR AMPLIFIER
12	EACH	TRAFFIC SIGNAL BACKPLATE
2	EACH	TRAFFIC SIGNAL POST
2	EACH	COMBINATION MAST ARM ASSEMBLY AND POLE
2	EACH	COMBINATION DUAL MAST ARM ASSEMBLY AND POLE

TS 11390
IDOT TACTICS
FORMER EAGLE 2E

MODEL: Default
FILE NAME: pw:\\lh-pw.bentley.com:lh-pw-01\Documents\01 Active Projects\MW-Cr-S-168959100 - IL 64\Phase III\2 Design\CADd\Plan Sheets\Signal\West Corridor Signal\D1D08121-sht4-96_KHA.dgn

Kimley»Horn
© 2022 KIMLEY-HORN AND ASSOCIATES, INC.
4201 WINFIELD ROAD, SUITE 600
WARRENVILLE, IL 60555
PHONE: 630-487-5550
WWW.KIMLEY-HORN.COM

USER NAME =	DESIGNED -	REVISED -	
	DRAWN -	REVISED -	
PLOT SCALE =	CHECKED -	REVISED -	
PLOT DATE =	DATE -	REVISED -	

STATE OF ILLINOIS
DEPARTMENT OF TRANSPORTATION

TRAFFIC SIGNAL EQUIPMENT REMOVAL PLAN
IL 64 (NORTH AVE) AND GLENDALE SQUARE ACCESS / MENARDS ENTR

SCALE: 1" = 20' | SHEET OF SHEETS | STA. TO STA.

F.A.P. RTE.	SECTION	COUNTY	TOTAL SHEETS	SHEET NO.
307	2020-263-SUR,SW&TS	DUPAGE	529	197
		CONTRACT NO. 62N33		
	ILLINOIS	FED. AID PROJECT		

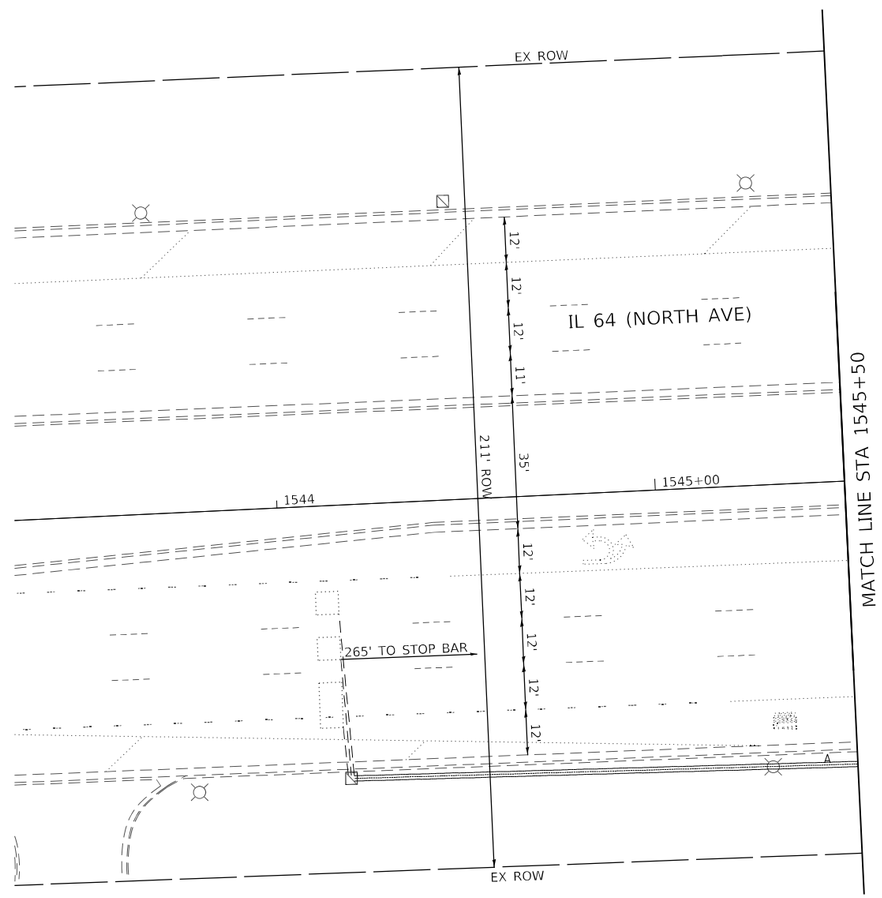

N

0 20 40 60
SCALE IN FEET

TS 11390
IDOT TACTICS
FORMER EAGLE 2E

MODEL: Default
FILE NAME: pw:\\uh-pw.bentley.com:sh-pw-01\Documents\01 Active Projects\MVCI-S-168959100 - IL 64\Phase III\2 Design\CAD\Plan Sheets\Signal\West Corridor Signal\D108121-sht1-97 KHA.dgn

Kimley»Horn
© 2022 KIMLEY-HORN AND ASSOCIATES, INC.
4201 WINFIELD ROAD, SUITE 600
WARRENVILLE, IL 60555
PHONE: 630-487-5550
WWW.KIMLEY-HORN.COM

USER NAME =	DESIGNED -	REVISED -
	DRAWN -	REVISED -
PLOT SCALE =	CHECKED -	REVISED -
PLOT DATE =	DATE -	REVISED -

STATE OF ILLINOIS
DEPARTMENT OF TRANSPORTATION

TRAFFIC SIGNAL EQUIPMENT REMOVAL PLAN
IL 64 (NORTH AVE) AND GLENDALE SQUARE ACCESS / MENARDS ENTR

SCALE: 1" = 20' | SHEET OF SHEETS | STA. TO STA.

F.A.P. RTE.	SECTION	COUNTY	TOTAL SHEETS	SHEET NO.
307	2020-263-SUR,SW&TS	DUPAGE	529	198
		CONTRACT NO. 62N33		
	ILLINOIS	FED. AID PROJECT		

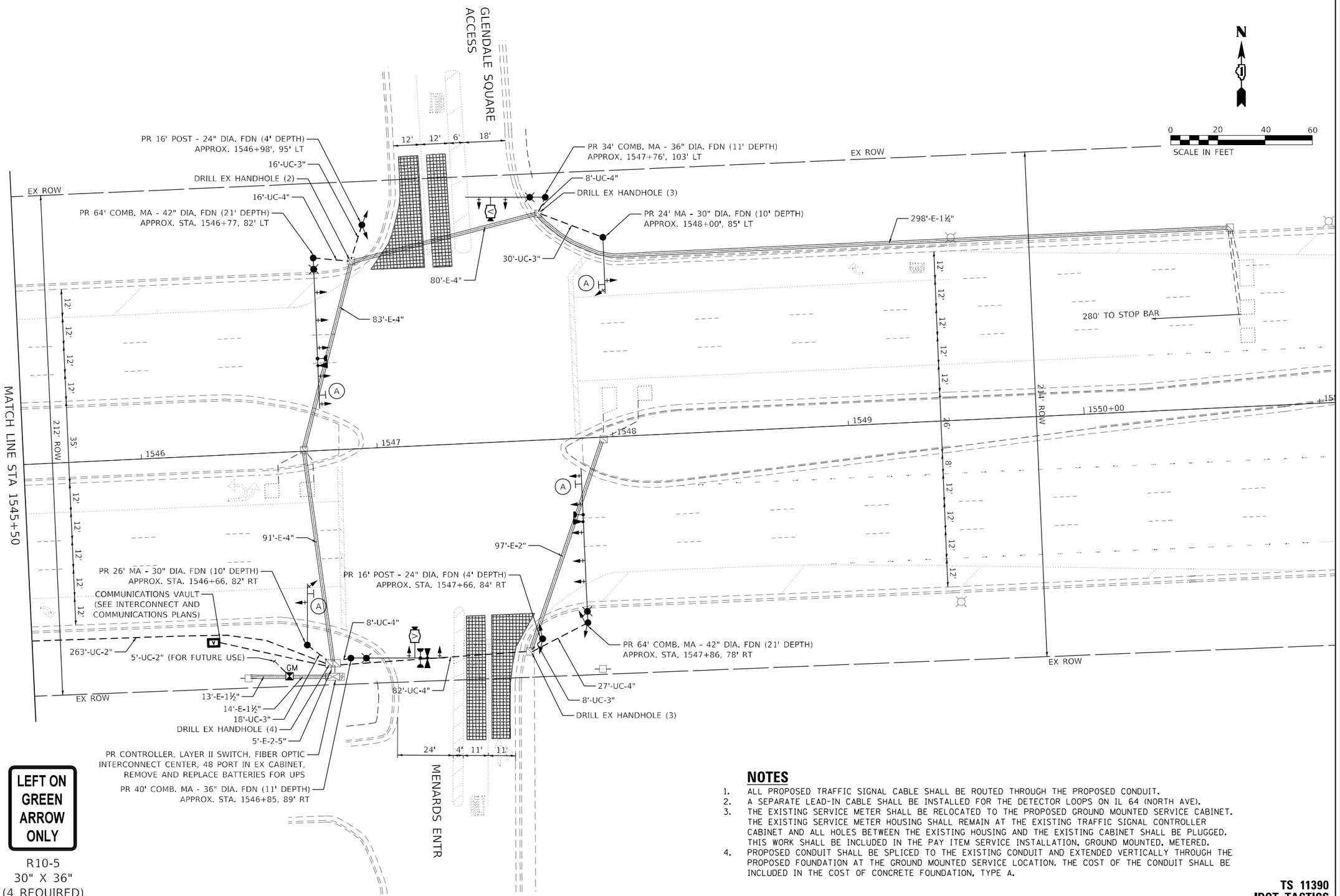

NOTES

1. ALL PROPOSED TRAFFIC SIGNAL CABLE SHALL BE ROUTED THROUGH THE PROPOSED CONDUIT.
2. A SEPARATE LEAD-IN CABLE SHALL BE INSTALLED FOR THE DETECTOR LOOPS ON IL 64 (NORTH AVE).
3. THE EXISTING SERVICE METER SHALL BE RELOCATED TO THE PROPOSED GROUND MOUNTED SERVICE CABINET. THE EXISTING SERVICE METER HOUSING SHALL REMAIN AT THE EXISTING TRAFFIC SIGNAL CONTROLLER CABINET AND ALL HOLES BETWEEN THE EXISTING HOUSING AND THE EXISTING CABINET SHALL BE PLUGGED. THIS WORK SHALL BE INCLUDED IN THE PAY ITEM SERVICE INSTALLATION, GROUND MOUNTED, METERED.
4. PROPOSED CONDUIT SHALL BE SPLICED TO THE EXISTING CONDUIT AND EXTENDED VERTICALLY THROUGH THE PROPOSED FOUNDATION AT THE GROUND MOUNTED SERVICE LOCATION. THE COST OF THE CONDUIT SHALL BE INCLUDED IN THE COST OF CONCRETE FOUNDATION, TYPE A.

TS 11390
IDOT TACTICS
FORMER EAGLE 2E

MODEL: Default
FILE NAME: pw:\\h-pw.bentley.com:h-pw-01\Documents\01 Active Projects\MW-Cn-S-168959100 - IL 64\Phase III\2 Design\CADd\Plan Sheets\Signal\West Corridor Signal\D108121-sht4-of-98_KHA.dgn

Kimley»Horn
© 2022 KIMLEY-HORN AND ASSOCIATES, INC.
4201 WINFIELD ROAD, SUITE 600
WARRENVILLE, IL 60555
PHONE: 630-487-5550
WWW.KIMLEY-HORN.COM

USER NAME =	DESIGNED -	REVISED -	
	DRAWN -	REVISED -	
PLOT SCALE =	CHECKED -	REVISED -	
PLOT DATE =	DATE -	REVISED -	

STATE OF ILLINOIS
DEPARTMENT OF TRANSPORTATION

TRAFFIC SIGNAL MODERNIZATION PLAN
IL 64 (NORTH AVE) AND GLENDALE SQUARE ACCESS / MENARDS ENTR

SCALE: 1" = 20' | SHEET OF SHEETS | STA. TO STA.

F.A.P. RTE.	SECTION	COUNTY	TOTAL SHEETS	SHEET NO.
307	2020-263-SUR,SW&TS	DUPAGE	529	199

CONTRACT NO. 62N33

ILLINOIS | FED. AID PROJECT

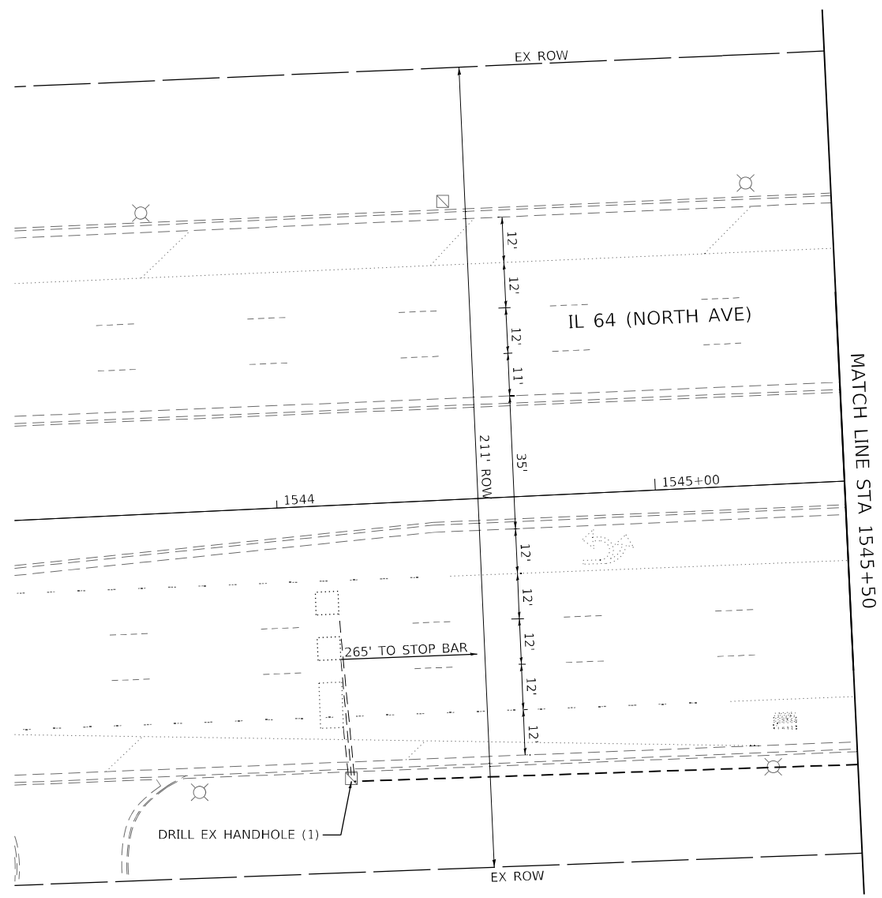

N

0 20 40 60

SCALE IN FEET

TS 11390
IDOT TACTICS
FORMER EAGLE 2E

MODEL: Default
FILE NAME: pw:\\uh-pw.bentley.com:sh-pw-01\Documents\01 Active Projects\MVCI-S-168959100 - IL 64\Phase III\2 Design\CAD\Plan Sheets\Signal\West Corridor Signal\D108121-sht1-99 (HA).dgn

Kimley»Horn
© 2022 KIMLEY-HORN AND ASSOCIATES, INC.
4201 WINFIELD ROAD, SUITE 600
WARRENVILLE, IL 60555
PHONE: 630-487-5550
WWW.KIMLEY-HORN.COM

USER NAME =	DESIGNED -	REVISED -	
	DRAWN -	REVISED -	
PLOT SCALE =	CHECKED -	REVISED -	
PLOT DATE =	DATE -	REVISED -	

STATE OF ILLINOIS
DEPARTMENT OF TRANSPORTATION

TRAFFIC SIGNAL MODERNIZATION PLAN
IL 64 (NORTH AVE) AND GLENDALE SQUARE ACCESS / MENARDS ENTR

SCALE: 1" = 20' | SHEET OF SHEETS | STA. TO STA.

F.A.P. RTE.	SECTION	COUNTY	TOTAL SHEETS	SHEET NO.
307	2020-263-SUR,SW&TS	DUPAGE	529	200
		CONTRACT NO. 62N33		
	ILLINOIS	FED. AID PROJECT		