| F.A. ROUTE | SECTION | COUNTY | TOTAL SHEETS | SHEET NO. |
|---|---|---|---|---|
| I-94 | * | COOK | 318 | 172 |
| STA. | | TO STA. | | |
| FED. ROAD DIST. NO. 1 | ILLINOIS | FEDERAL AID PROJECT | | |

SHT. 51 OF 554

Bench Mark
Chiseled Square cut in Northwest Wingwall (Northwest corner of deck) - El. 627.29

Existing Structure:
Structure Number 016-0158 S.B. & 016-0159 N.B.
I-Beam Approach Spans 4 @ 57'-4" & 2 @ 68'-10" and one steel truss span @ 420'-0" over Little Calumet River
Superstructure to be removed in Stages.
No salvage

* 42(VB-10,12,HB-14,B-11) & 0707.1 HB(R-3)90

Note "A": Layout of Riprap maybe varied to suit ground conditions in field, as directed by the Engineer.

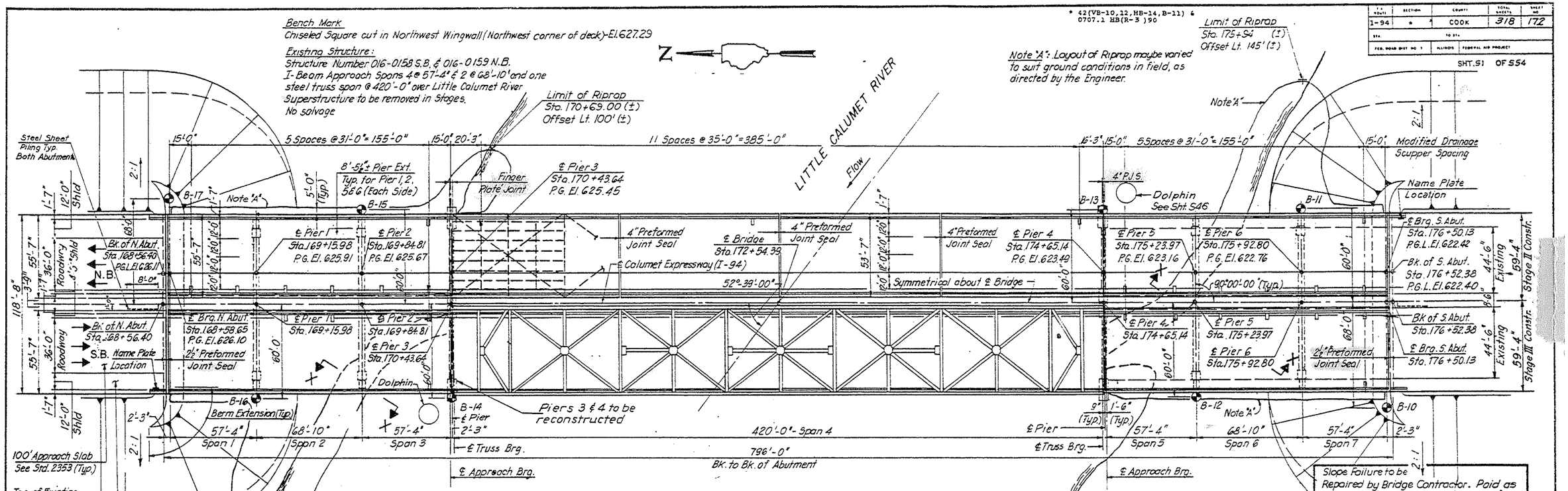


PLAN

Design Stresses
$f'_c$ = 3500 psi
$f_y$ = 60,000 psi. (Reinforcing)
$f_s$ = 20,000 psi (AASHTO M 183)
$f_s$ = 27,000 psi (AASHTO M 223, Gr. 50)

Loading
HS-20 & ALT.
Allow for 25 psf for Future wearing surface

Design Specifications
AASHTO 1989 & Interim
AASHTO 1983 Seismic Guide Specifications

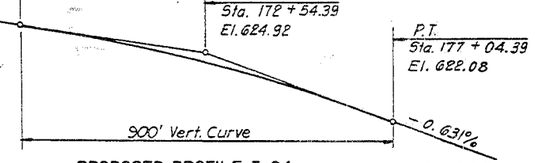


PROPOSED PROFILE I-94

APPROVED
FOR STRUCTURAL ADEQUACY ONLY
Licensed Structural Engineer

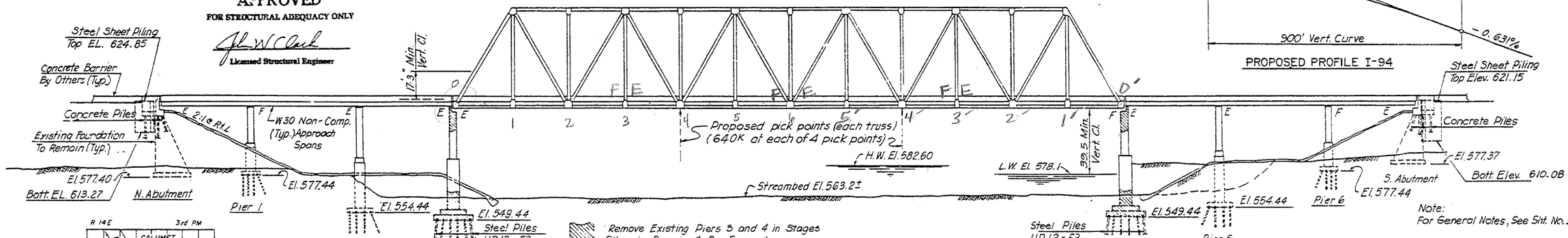


ELEVATION
(Looking East)

Note:
For General Notes, See Sht. No. 52.

Indicates Boring Location

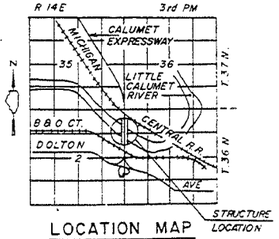


LOCATION MAP

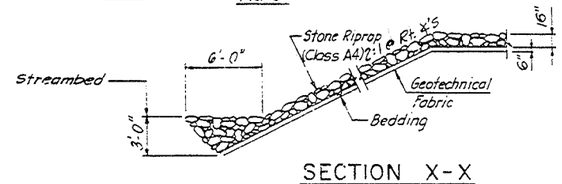


SECTION X-X

STATE OF ILLINOIS SANDOR FERENCZI 81-3253 LICENSED STRUCTURAL ENGINEER

Sandor Ferenczi Date: 11-19-90
Exp. Date: 11-30-92

STATION 172+54.39
RE-BUILT 199 BY
STATE OF ILLINOIS
PROJECT ACIM-ACBH I-94-3(307)75
LOADING HS20 & ALT
STR. No. 016-0158 S.B.

* 42(VB-10,12,HB-14,B-11) & 0707.1 HB(R-3)90

STATION 172+54.39
RE-BUILT 199 BY
STATE OF ILLINOIS
PROJECT ACIM-ACBH I-94-3(307)70
LOADING HS20 & ALT.
STR. No. 016-0159 N.B.

** 42(VB-10,12,HB-14,B-11) & 0707.1 HB(R-1)90

NAME PLATES
SEE STANDARD 2113
1 NAME PLATE EACH STRUCTURE

STATE OF ILLINOIS
DEPARTMENT OF TRANSPORTATION
PLAN AND ELEVATION
F.A.I.-94 OVER LITTLE CALUMET RIVER
COOK COUNTY
STA. 172+54.39
SN 016-0158 (S. BOUND)
SN 016-0159 (N. BOUND)
SCALE
DRAWN BY S.P.
DATE NOV. 1991
CHECKED BY J.M.

016-0158-0159

| F.A. ROUTE | SECTION | COUNTY | TOTAL SHEETS | SHEET NO. |
|---|---|---|---|---|
| I-94 | * | COOK | 318 | 173 |
| STA. | | TO STA. | | |
| FED. ROAD DIST. NO. 7 | | ILLINOIS | FEDERAL AID PROJECT | |

Sheet S2 of S54

* 42(VB-10,12,HB-14,B-11) & 0707.1 HB(R-3)90

## GENERAL NOTES:

SEE PLANS FOR BORING DATA.

FASTENERS SHALL BE HIGH STRENGTH BOLTS 3/4" DIAMETER, OPEN HOLES 13/16" DIAMETER, UNLESS OTHERWISE NOTED.

CALCULATED WEIGHT OF STRUCTURAL STEEL IN LBS.:

| | M183 | M223 | TOTALS |
|---|---|---|---|
| N.B. TRUSS | 1,013,037 | 1,502,957 | 2,515,994 |
| N.B. APPROACHES | 582,246 | 3,876 | 586,122 |
| N.B. TOTAL | 1,595,283 | 1,506,833 | 3,102,116 |
| S.B. SAME TOTALS | | | |

ROADWAY EXPANSION GUARDS SHALL BE ASSEMBLED IN THE PROPER POSITION WITH THE ENDS IN PLACE AND SHALL BE LEFT ASSEMBLED FOR SHOP INSPECTION.

THE ROADWAY EXPANSION PLATES SHALL BE FLAME CUT AS PROVIDED IN ARTICLE 507.04(1) OF THE STANDARD SPECIFICATIONS.

THE ZINC-SILICATE AND VINYL PAINT SYSTEM SHALL BE USED FOR SHOP AND FIELD PAINTING OF STRUCTURAL STEEL, EXCEPT WHERE OTHERWISE NOTED. THE COLOR OF THE FINAL FINISH COAT SHALL BE 10YR 7/1 LIGHT GREY FOR BOTH INTERIOR & EXTERIOR STRUCTURAL STEEL WORK.

EXPANSION JOINT PLATES AND ATTACHED BARS SHALL BE SHOP PAINTED WITH THE ZINC-SILICATE PRIMER.

FIELD WELDING OF CONSTRUCTION ACCESSORIES WILL NOT BE PERMITTED TO TRUSS MEMBERS, THE BOTTOM FLANGE OF BEAMS OR GIRDERS NOR TO THE TOP FLANGE FOR A DISTANCE EQUAL TO ONE-FOURTH THE SPAN LENGTH EACH WAY FROM THE PIER SUPPORTS. FIELD WELDING IN OTHER AREAS WILL BE PERMITTED ONLY WHEN APPROVED BY THE ENGINEER.

ANCHOR BOLTS SHALL BE SET BEFORE BOLTING DIAPHRAGMS AND/OR ERECTING TRUSSES OVER SUPPORTS.

THE MAIN LOAD CARRYING MEMBER COMPONENTS SUBJECT TO TENSILE STRESS SHALL CONFORM TO THE SUPPLEMENTAL REQUIREMENTS FOR NOTCH TOUGHNESS ZONE 2. THESE COMPONENTS ARE AS FOLLOWS:

A. TENSION FLANGES, WEB AND ALL SPLICE MATERIAL OF THE STEEL GIRDERS OR WIDE FLANGE BEAMS.

B. TRUSS VERTICALS (HANGERS) IN TENSION.

REINFORCEMENT BARS SHALL CONFORM TO THE REQUIREMENTS OF AASHTO M-31, M-42 OR M-53 GRADE 60.

LAYOUT OF SLOPE PROTECTION SYSTEM MAY BE VARIED IN THE FIELD TO SUIT GROUND CONDITIONS AS DIRECTED BY THE ENGINEER.

PLAN DIMENSIONS AND DETAILS RELATIVE TO EXISTING STRUCTURE HAVE BEEN TAKEN FROM EXISTING PLANS AND ARE SUBJECT TO NOMINAL CONSTRUCTION VARIATIONS. IT SHALL BE THE CONTRACTOR'S RESPONSIBILITY TO VERIFY SUCH DIMENSIONS AND DETAILS IN THE FIELD AND MAKE THE NECESSARY APPROVED ADJUSTMENTS PRIOR TO CONSTRUCTION OR ORDERING OF MATERIALS. SUCH VARIATIONS SHALL NOT BE CAUSE FOR ADDITIONAL COMPENSATION OR A CHANGE IN THE SCOPE OF THE WORK.

EXPANSION BOLTS SHALL CONSIST OF APPROVED EXPANSION ANCHORS, PROVIDING MINIMUM CERTIFIED PROOF LOAD = 4,080 LBS., AND 3/4" DIAMETER X 12" HOOKED BOLTS.

BEARING SEAT SURFACES SHALL BE CONSTRUCTED OR ADJUSTED TO THE DESIGNATED ELEVATIONS WITHIN A TOLERANCE OF 1/8 INCH. ADJUSTMENT SHALL BE MADE EITHER BY GRINDING THE SURFACE OR BY SHIMMING THE BEARING. TWO 1/8" ADJUSTING SHIMS, OF THE DIMENSIONS OF THE BOTTOM BEARING PLATE, SHALL BE PROVIDED FOR EACH BEARING IN ADDITION TO ALL OTHER PLATES OR SHIMS. (FOR TYPE I ELASTOMERIC BEARINGS, SHIMS OF THE DIMENSIONS OF THE TOP PLATE SHALL BE PROVIDED AND PLACED AS DETAILED).

THE CONTRACTOR SHALL DRIVE TWO 14" ϕ METAL SHELL TEST PILES IN A PERMANENT LOCATION, ONE AT EAST END OF EACH ABUTMENT AS DIRECTED BY THE ENGINEER BEFORE ORDERING THE REMAINDER OF THE PILES. LIKEWISE, THE CONTRACTOR SHALL DRIVE TWO HP 12X53 TEST PILES IN PERMANENT LOCATIONS AT THE EAST AND WEST END OF EACH PIER AS DIRECTED BY THE ENGINEER BEFORE ORDERING THE REMAINDER OF HP 12X53 PILES.

THE INFORMATION SHOWN FOR THE TEMPORARY SHEET PILING IS ESTIMATED. IT IS THE CONTRACTOR'S RESPONSIBILITY TO PROVIDE A DESIGN OF THE TEMPORARY SHEET PILING AND ASSOCIATED MEMBERS, IF REQUIRED, SUBJECT TO THE APPROVAL OF THE ENGINEER.

CONCRETE PILES AT ABUTMENTS SHALL BE DRIVEN IN HOLES PRECORED THROUGH THE EMBANKMENT IN ACCORDANCE WITH ARTICLE 513.09(C) OF THE STANDARD SPECIFICATIONS.

FOR ADDITIONAL DESIGN NOTES FOR TRUSS BRIDGE SEE SHT. S20.

THE TENSION MEMBERS AND MEMBER COMPONENTS WHOSE FAILURE WOULD BE EXPECTED TO RESULT IN COLLAPSE OF THE BRIDGE SHALL CONFORM TO THE BASE METAL CHARPY V-NOTCH REQUIREMENTS FOR FRACTURE CRITICAL MEMBERS ZONE 2. THESE MEMBERS OR MEMBER COMPONENTS ARE:

TRUSS BOTTOM CHORD PLATES, TENSION DIAGONAL PLATES, BOTTOM CHORD AND TENSION DIAGONAL'S SPLICE PLATES AND GUSSET PLATES OF JOINTS $U_1$, $U_3$, $U_5$, $U_5'$ $U_3'$ $U_1'$ $L_2$, $L_4$, $L_6$ $L_4'$ AND $L_2'$

* 240 SQ. FT. ABUTMENTS EACH BRIDGE
640 SQ. FT. PIER 3 & 4 EACH BRIDGE
** INCLUDES DECK SURFACE

## SUMMARY OF BILL OF MATERIAL

| | ITEM | UNIT OF MEASURE | CONSTRUCTION STAGE II (NB) SUB-STRUCTURE | SUPER-STRUCTURE | SUBTOTAL | CONSTRUCTION STAGE III (SB) SUB-STRUCTURE | SUPER-STRUCTURE | SUBTOTAL | BRIDGE TOTAL |
|---|---|---|---|---|---|---|---|---|---|
| | REMOVAL OF EXISTING STRUCTURES NO. 2 | EACH | — | 1 | 1 | — | 1 | 1 | 2 |
| | CONCRETE REMOVAL | CU.YD. | 1907.7 | — | 1907.7 | 1910.8 | — | 1910.8 | 3759.2 |
| | STRUCTURE EXCAVATION | CU.YD. | 325 | — | 325 | 347 | — | 347 | 672.1 |
| | FURNISHING METAL PILE SHELLS 14" | LIN.FT. | 242 | — | 242 | 242 | — | 242 | 484 |
| | DRIVING AND FILLING SHELLS | LIN.FT. | 242 | — | 242 | 242 | — | 242 | 484 |
| | TEST PILE METAL SHELLS | EACH | 2 | — | 2 | 2 | — | 2 | 4 |
| | FURNISHING STEEL PILES, HP12X53 | LIN.FT. | 2910 | — | 2910 | 2910 | — | 2910 | 5820 |
| | DRIVING STEEL PILES | LIN.FT. | 2910 | — | 2910 | 2910 | — | 2910 | 5820 |
| | TEST PILE, STEEL HP12X53 | EACH | 6 | — | 6 | 6 | — | 6 | 12 |
| | FURNISHING CREOSOTED PILES OVER 38 FT. | LIN.FT. | 45 | — | 45 | 45 | — | 45 | 90 |
| | DRIVING TIMBER PILES | LIN.FT. | 45 | — | 45 | 45 | — | 45 | 90 |
| | TREATED TIMBER | F.B.M. | 8150 | — | 8150 | 8150 | — | 8150 | 16,300 |
| | STEEL SHEET PILING (SPECIAL) | SQ.FT. | 2770 | — | 2770 | 2840 | — | 2840 | 5540 |
| | ~~STEEL SHEET PILING~~ | SQ.FT. | 204 | — | 204 | — | — | — | 204 |
| | COFFERDAM EXCAVATION | CU.YDS. | 2375 | — | 2375 | 3567 | — | 3567 | 5942 |
| | STONE RIPRAP CL. A 4 | SQ.YD. | 2900 | — | 2900 | 2900 | — | 2900 | 5800 |
| | FILTER FABRIC FOR USE WITH RIPRAP | SQ.YD. | 2900 | — | 2900 | 2900 | — | 2900 | 5800 |
| | NAVIGATION LIGHTING SYSTEM | L. SUM | — | 1 | 1 | — | 1 | 1 | 2 |
| | TRUSS BRIDGE GROUNDING SYSTEM | L. SUM | — | 1 | 1 | — | 1 | 1 | 2 |
| | TEMPORARY SHEET PILING | SQ.FT. | 5000 | — | 5000 | 5000 | — | 5000 | 10,000 |
| | REINFORCED NEOPRENE EXPANSION JOINT TREATMENT | LIN. FT. | — | 64 | 64 | — | 64 | 64 | 128 |
| | CLASS X CONCRETE | CU.YD. | 2713.9 | — | 2713.9 | 2762.9 | — | 2762.9 | 5475.7 |
| | CLASS X CONCRETE SUPERSTRUCTURE | CU.YD. | — | 1287.3 | 1287.3 | — | 1287.3 | 1287.3 | 2574.6 |
| | REINFORCEMENT BARS | LBS. | 66,690 | — | 66,690 | 65,770 | — | 65,770 | 132,460 |
| | REINFORCEMENT BARS, EPOXY COATED | LBS. | 287,400 | 321,040 | 608,440 | 296,365 | 321,040 | 617,405 | 1,225,780 |
| | POROUS GRANULAR EMBANKMENT | CU.YD. | 64.4 | — | 64.4 | 79.4 | — | 79.4 | 143.8 |
| | EXPANSION BOLTS 3/4 INCH | EACH | 627 | — | 627 | 577 | — | 577 | 1254 |
| | BOLTS EMBEDDED IN CONCRETE, 1 INCH | EACH | 180 | — | 180 | 180 | — | 180 | 360 |
| | ELASTOMERIC BEARING ASSEMBLY, TYPE I | EACH | — | 56 | 56 | — | 56 | 56 | 112 |
| | ELASTOMERIC BEARING ASSEMBLY, TYPE II | EACH | — | 16 | 16 | — | 16 | 16 | 32 |
| | PREFORMED JT. SEAL, 2 1/2" | LIN.FT. | — | 111.3 | 111.3 | — | 111.3 | 111.3 | 222.6 |
| | PREFORMED JT. SEAL, 4" | LIN.FT. | — | 222.6 | 222.6 | — | 222.6 | 222.6 | 445.2 |
| ** | PROTECTIVE COAT | SQ.YD. | — | 5377 | 5377 | — | 5377 | 5377 | 10,754 |
| | FURNISHING & ERECTING STRUCTURAL STEEL (SPECIAL) | L.SUM | — | 1 | 1 | — | 1 | 1 | 2 |
| | DRAINAGE SCUPPER SPECIAL | EACH | — | 28 | 28 | — | 28 | 28 | 56 |
| | PROTECTIVE SHIELD | SQ.YD. | — | 2940 | 2940 | — | 2940 | 2940 | 5880 |
| | INSTALL AND REMOVE TEMPORARY CONCRETE BARRIER | UNIT | — | — | — | — | 80 | 80 | 80 |
| | NAME PLATES | EACH | — | 1 | 1 | — | 1 | 1 | 2 |
| | EPOXY CRACK SEALING | LIN.FT. | 171 | — | 171 | 150 | — | 150 | 321 |
| | EPOXY MORTAR REPAIR | CU.FT. | 4.1 | — | 4.1 | 4.8 | — | 4.8 | 8.9 |
| | MAINTENANCE OF NAVIGATION | L.SUM | — | — | 1 | — | — | 1 | 2 |
| * | BRIDGE SEAT SEALER | L.SUM | 0.41 | — | 0.41 | 0.41 | — | 0.41 | |
| | DOLPHIN EXCAVATION | CU.YD. | 48.0 | — | 48.0 | 50.0 | — | 50.0 | 960 |
| | EPOXY GROUTED REINFORCEMENT BARS | EACH | 260 | — | 260 | 420 | — | 420 | 520 |
| | ~~ALUMINUM BARRIER WALL - INSTALL & REMOVE~~ | LIN. FT. | — | 420 | 420 | — | — | — | 420 |
| | ~~FURNISH & ERECT STRUCTURAL STEEL SUPPORT SYSTEM~~ REMOVAL | LBS | — | — | — | 94,000 | — | 94,000 | 94,000 |
| | BRIDGE DECK GROOVING | SQ.YD. | — | 4608 | 4608 | — | 4608 | 4608 | |
| | FORMED CONCRETE REPAIR (DEPTH ≤ 5") | SQ FT | 180 | — | 180 | 39 | — | 39 | 244 |
| | FORMED CONCRETE REPAIR (DEPTH > 5") | SQ FT | 151 | — | 151 | 14 | — | 14 | 165 |
| | COFFERDAM (PIER 2) | EACH | 1 | — | 1 | 1 | — | 1 | 2 |
| | COFFERDAM (PIER 3) | EACH | 1 | — | 1 | 1 | — | 1 | 2 |
| | COFFERDAM (PIER 4) | EACH | 1 | — | 1 | 1 | — | 1 | 2 |
| | COFFERDAM (PIER 5) | EACH | 1 | — | 1 | 1 | — | 1 | 2 |
| | FURNISHING & ERECTING STRUCTURAL STEEL (APPROACH SPANS) | L SUM | — | 0.64 | 0.64 | — | 0.74 | 0.74 | |
| | FLOATING BEARING, GUIDED EXPANSION 1800 KIPS | EACH | — | 2 | 2 | — | 2 | 2 | 4 |
| | FLOATING BEARING, FIXED 1800 KIPS | EACH | — | 2 | 2 | — | 2 | 2 | 4 |

(Included in Roadway Summary of Quantities Column)

## SUMMARY OF BILL OF MATERIAL (CONTINUATION)

| ITEM | UNIT OF MEASURE | SUPERSTRUCTURE |
|---|---|---|
| BIRD SCREENS | L. SUM | 1 |
| SEALANT FOR BOX SECTIONS | L. SUM | 1 |

STATE OF ILLINOIS
DEPARTMENT OF TRANSPORTATION
GENERAL NOTES & SUMMARY OF QUANTITIES
F.A.I.-94 OVER LITTLE CALUMET RIVER
COOK COUNTY
STA. 172+54.39 SN 016-0158 (S. BOUND) SN 016-0159 (N. BOUND)

SCALE DRAWN BY

DATE NOV. 1991, REV. 6/92 CHECKED BY WFT

* 42(VB-10,12,HB-14,B-11) &
0707.1 HB(R-3)90

| F.A. ROUTE | SECTION | COUNTY | TOTAL SHEETS | SHEET NO. |
|---|---|---|---|---|
| I-94 | * | COOK | 318 | 174 |
| STA. | | TO STA. | | |
| FED. ROAD DIST. NO. 7 | ILLINOIS | FEDERAL AID PROJECT | | |

SHT. S3 OF S54

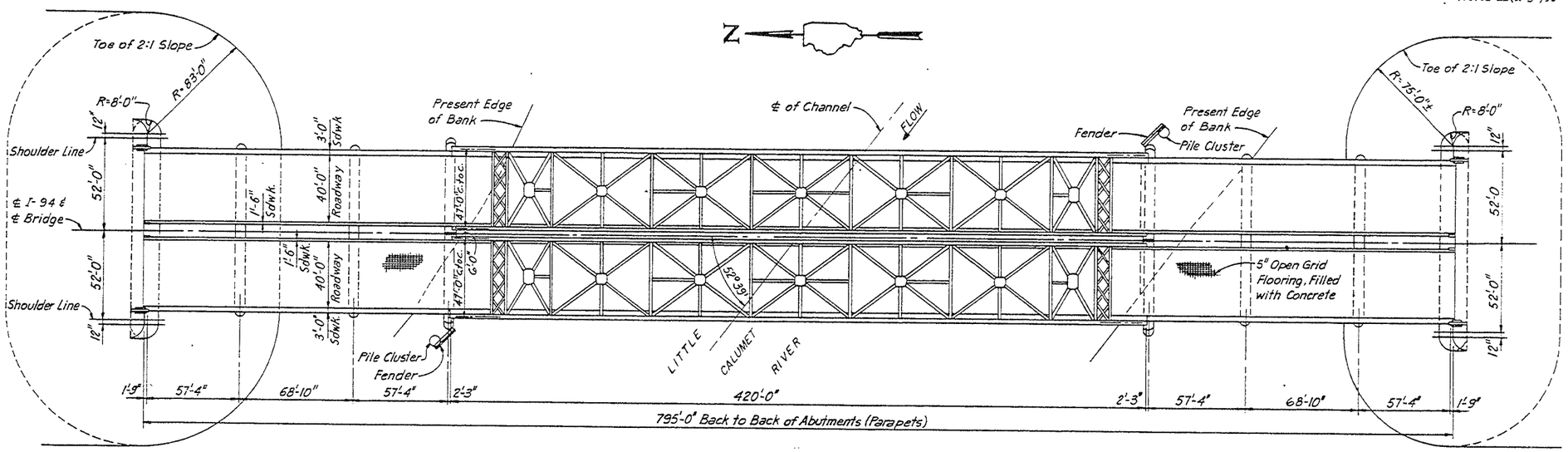


PLAN

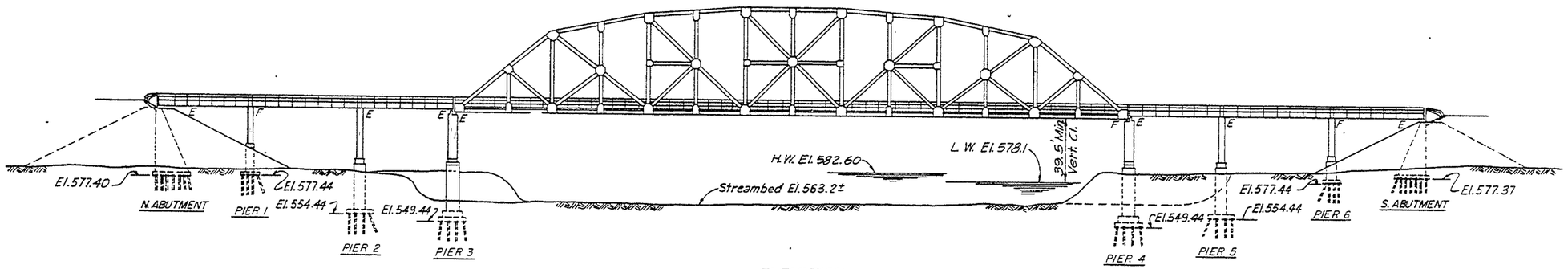


ELEVATION

NOTE:
For Existing Structure Reference Drawing
See Little Calumet River Bridge F.A.
Project J-I-246 (1) Rt. FA-122, Sec. 42B-11,
42E-11 & 42P-11 File 4089 Sheets 1 thru 27

STATE OF ILLINOIS
DEPARTMENT OF TRANSPORTATION
EXISTING STRUCTURE
F.A.I.-94 OVER LITTLE CALUMET RIVER
COOK COUNTY

STA. 172 + 54.39
SN 016-0158 (S. BOUND)
SN 016-0159 (N. BOUND)

SCALE
DRAWN BY P.G.

DATE NOV. 1991
CHECKED BY J.M.

| F.A. ROUTE | SECTION | COUNTY | TOTAL SHEETS | SHEET NO. |
|---|---|---|---|---|
| I-94 | * | COOK | 318 | 175 |
| STA. | | TO STA. | | |
| FED. ROAD DIST. NO. 7 | ILLINOIS | FEDERAL AID PROJECT | | |

* 42(VB-10,12;HB-14,B-11) & 0707.1 HB(R-3)90

SHT. S4 OF S54

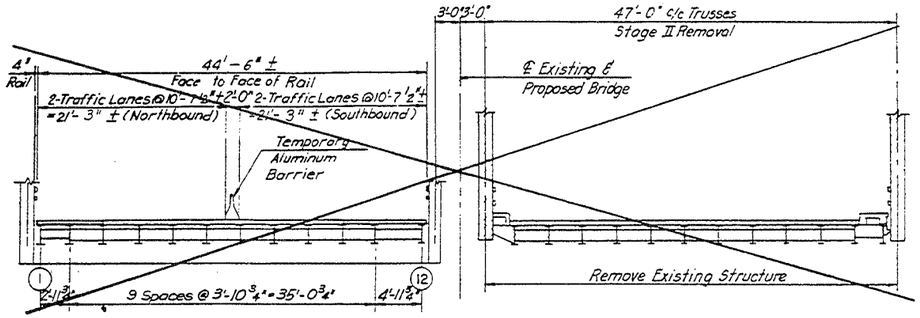


STAGE II - TRUSS SPAN
(LOOKING NORTH)

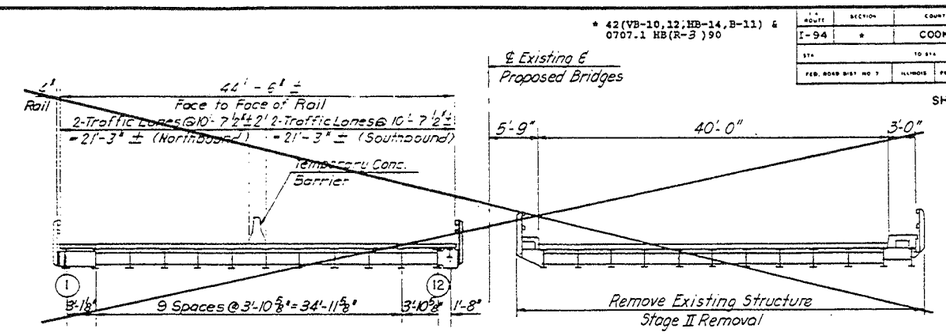


STAGE II - APPROACH SPANS
(LOOKING NORTH)

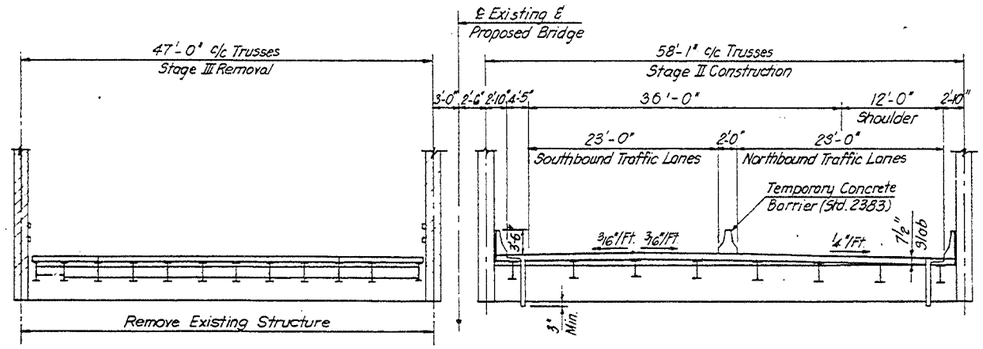


STAGE III - TRUSS SPAN
(LOOKING NORTH)

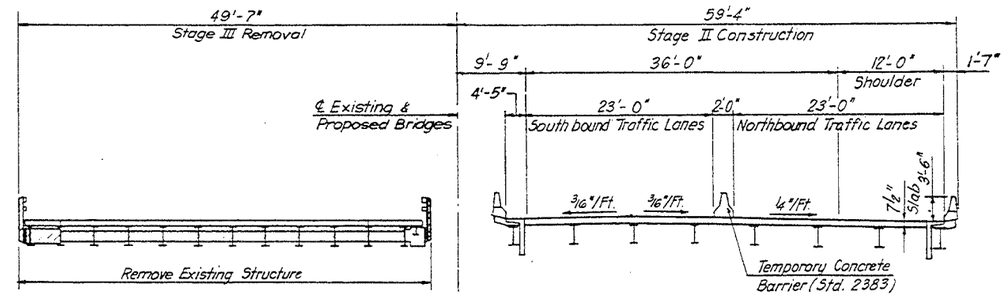


STAGE III - APPROACH SPANS
(LOOKING NORTH)

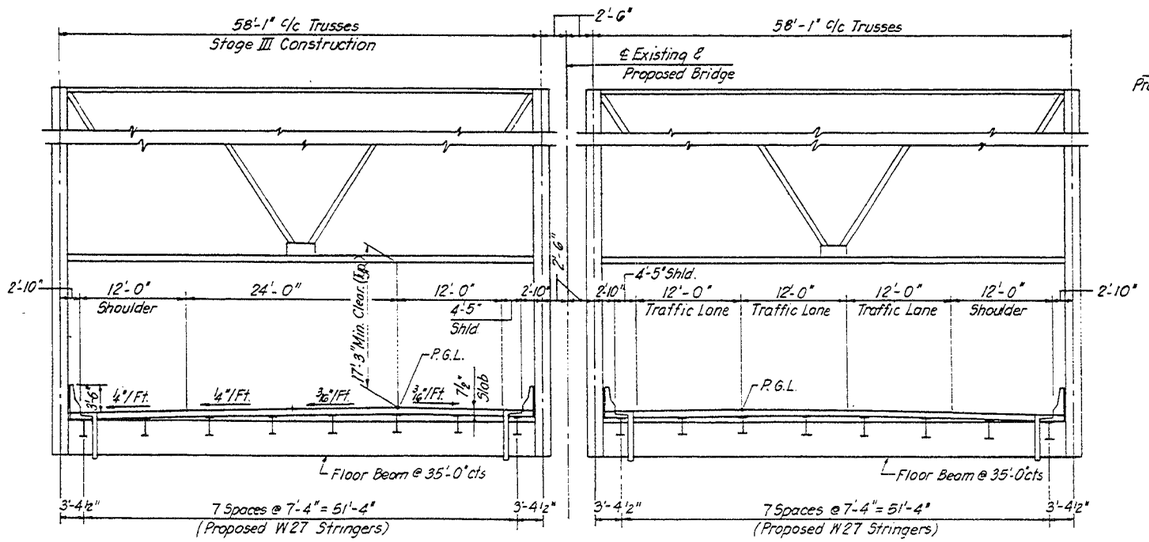


FINAL CROSS SECTION - TRUSS SPANS
(LOOKING NORTH AT FRONT PORTAL)

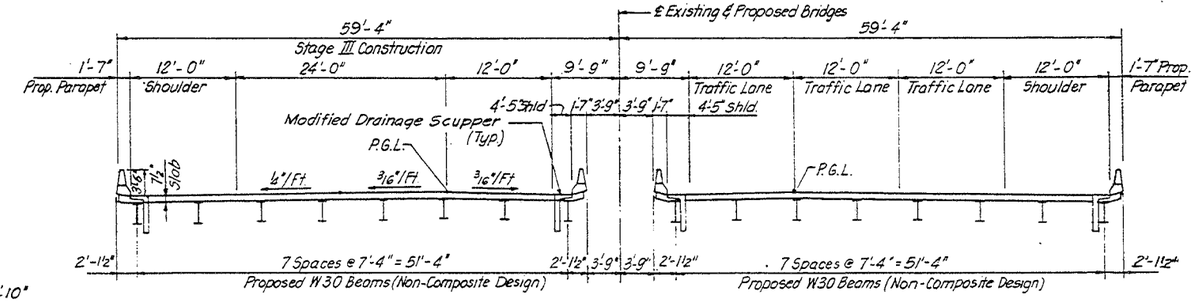


FINAL CROSS SECTION - APPROACH SPANS
(LOOKING NORTH)

LEGEND

Remove Existing Structure

STATE OF ILLINOIS
DEPARTMENT OF TRANSPORTATION
CONSTRUCTION STAGING

F.A.I.-94 OVER LITTLE CALUMET RIVER
COOK COUNTY

STA. 172+54.39
SN 016-0158 (S. BOUND)
SN 016-0159 (N. BOUND)

SCALE
DRAWN BY S.P.
DATE NOV. 1991
CHECKED BY J.M.

| F.A.I. ROUTE | SECTION | COUNTY | TOTAL SHEETS | SHEET NO. |
|---|---|---|---|---|
| I-94 | * | COOK | 318 | 176 |
| STA. | TO STA. | | | |
| FED. ROAD DIST. NO. 1 | ILLINOIS | FEDERAL AID PROJECT | | |

* 42(VB-10,12,HB-14,B-11) & 0707.1 HB(R-3 )90

SHT. 55 OF 554

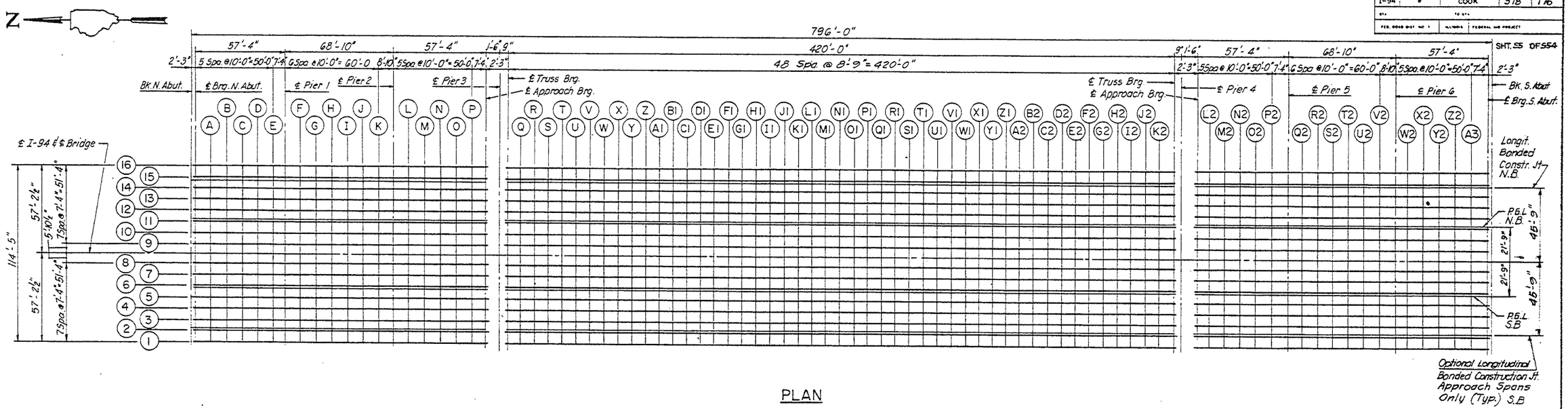


PLAN

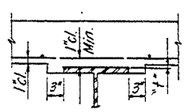


Non-Composite

INTERIOR BEAMS

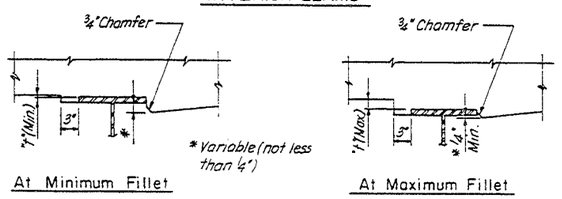


At Minimum Fillet

At Maximum Fillet

EXTERIOR BEAMS

To determine "t": After all structural steel has been erected, elevations of the top flanges of the beams shall be taken at intervals shown above these elevations subtracted from the "Theoretical Grade Elevations Adjusted for Dead Load Deflections" minus slab thickness, equal the fillet heights "t" above top flanges of beams.

FILLET HEIGHTS

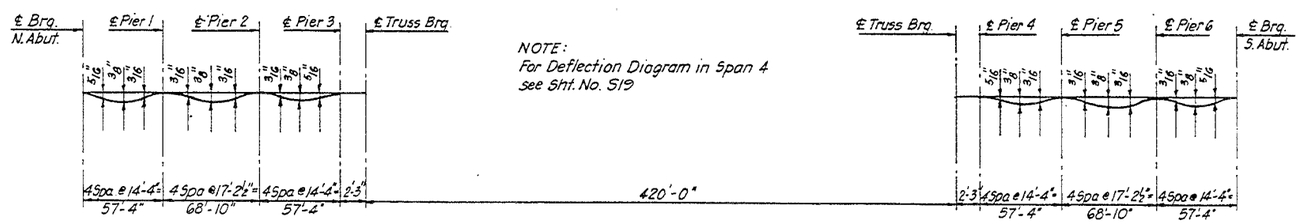


NOTE:
For Deflection Diagram in Span 4 see Sht. No. 519

NOTE:
The above deflections are not to be used in the field if the Engineer is working from the Grade Elevations adjusted for dead load deflections as shown.

DEAD LOAD DEFLECTION DIAGRAM
(Includes Weight of Concrete Only)

STATE OF ILLINOIS
DEPARTMENT OF TRANSPORTATION
TOP OF SLAB ELEVATION - I
F.A.I.- 94 OVER LITTLE CALUMET RIVER
COOK COUNTY

STA. 172 + 54.39
SN 016-0158 (S. BOUND)
SN 016-0159 (N. BOUND)

SCALE
DRAWN BY S.P.
DATE NOV. 1991
CHECKED BY J.M.

* 42(VB-10,12,HB-14,B-11) & 0707.1 HB(R-3 )90

| F.A. ROUTE | SECTION | COUNTY | TOTAL SHEETS | SHEET NO. |
|---|---|---|---|---|
| I-94 | * | COOK | 318 | 177 |
| STA. | | TO STA. | | |
| FED. ROAD DIST. NO. 7 | | ILLINOIS | FEDERAL AID PROJECT | |

SHT. NO. S6 OF S54

## STRINGERS No. 1 & 16

| LOCATION | STATION | OFFSET | THEORETICAL GRADE ELEVATIONS | THEORETICAL GRADE ELEVATIONS ADJUSTED FOR DEAD LOAD DEFLECTION |
|---|---|---|---|---|
| BK. NORTH ABUT. | 16856.40 | 35.458 | 625.433 | 625.433 |
| ℄ BRG. N. ABUT. | 16858.65 | 35.458 | 625.426 | 625.426 |
| A | 16868.65 | 35.458 | 625.394 | 625.412 |
| B | 16878.65 | 35.458 | 625.361 | 625.390 |
| C | 16888.65 | 35.458 | 625.328 | 625.356 |
| D | 16898.65 | 35.458 | 625.295 | 625.313 |
| E | 16908.65 | 35.458 | 625.261 | 625.266 |
| ℄ PIER 1 | 16915.98 | 35.458 | 625.236 | 625.236 |
| F | 16925.98 | 35.458 | 625.202 | 625.209 |
| G | 16935.98 | 35.458 | 625.167 | 625.186 |
| H | 16945.98 | 35.458 | 625.132 | 625.159 |
| I | 16955.98 | 35.458 | 625.097 | 625.124 |
| J | 16965.98 | 35.458 | 625.061 | 625.078 |
| K | 16975.98 | 35.458 | 625.025 | 625.030 |
| ℄ PIER 2 | 16984.81 | 35.458 | 624.993 | 624.993 |
| L | 16994.81 | 35.458 | 624.956 | 624.964 |
| M | 17004.81 | 35.458 | 624.919 | 624.941 |
| N | 17014.81 | 35.458 | 624.881 | 624.910 |
| O | 17024.81 | 35.458 | 624.843 | 624.870 |
| P | 17034.81 | 35.458 | 624.805 | 624.819 |
| ℄ APP. BRG. PIER 3 | 17042.14 | 35.458 | 624.777 | 624.777 |

## STRINGERS No. 4 & 13

| LOCATION | STATION | OFFSET | THEORETICAL GRADE ELEVATIONS | THEORETICAL GRADE ELEVATIONS ADJUSTED FOR DEAD LOAD DEFLECTION |
|---|---|---|---|---|
| BK. NORTH ABUT. | 16856.40 | 13.458 | 625.891 | 625.891 |
| ℄ BRG. N. ABUT. | 16858.65 | 13.458 | 625.884 | 625.884 |
| A | 16868.65 | 13.458 | 625.852 | 625.870 |
| B | 16878.65 | 13.458 | 625.819 | 625.848 |
| C | 16888.65 | 13.458 | 625.786 | 625.814 |
| D | 16898.65 | 13.458 | 625.753 | 625.771 |
| E | 16908.65 | 13.458 | 625.719 | 625.724 |
| ℄ PIER 1 | 16915.98 | 13.458 | 625.694 | 625.694 |
| F | 16925.98 | 13.458 | 625.660 | 625.667 |
| G | 16935.98 | 13.458 | 625.625 | 625.644 |
| H | 16945.98 | 13.458 | 625.590 | 625.617 |
| I | 16955.98 | 13.458 | 625.555 | 625.582 |
| J | 16965.98 | 13.458 | 625.519 | 625.536 |
| K | 16975.98 | 13.458 | 625.482 | 625.488 |
| ℄ PIER 2 | 16984.81 | 13.458 | 625.451 | 625.451 |
| L | 16994.81 | 13.458 | 625.414 | 625.422 |
| M | 17004.81 | 13.458 | 625.377 | 625.399 |
| N | 17014.81 | 13.458 | 625.339 | 625.360 |
| O | 17024.81 | 13.458 | 625.301 | 625.328 |
| P | 17034.81 | 13.458 | 625.263 | 625.277 |
| ℄ APP. BRG. PIER 3 | 17042.14 | 13.458 | 625.235 | 625.235 |

## STRINGERS No. 2 & 15

| LOCATION | STATION | OFFSET | THEORETICAL GRADE ELEVATIONS | THEORETICAL GRADE ELEVATIONS ADJUSTED FOR DEAD LOAD DEFLECTION |
|---|---|---|---|---|
| BK. NORTH ABUT. | 16856.40 | 28.125 | 625.586 | 625.586 |
| ℄ BRG. N. ABUT. | 16858.65 | 28.125 | 625.579 | 625.579 |
| A | 16868.65 | 28.125 | 625.547 | 625.565 |
| B | 16878.65 | 28.125 | 625.514 | 625.543 |
| C | 16888.65 | 28.125 | 625.481 | 625.509 |
| D | 16898.65 | 28.125 | 625.448 | 625.466 |
| E | 16908.65 | 28.125 | 625.414 | 625.419 |
| ℄ PIER 1 | 16915.98 | 28.125 | 625.389 | 625.389 |
| F | 16925.98 | 28.125 | 625.355 | 625.362 |
| G | 16935.98 | 28.125 | 625.320 | 625.339 |
| H | 16945.98 | 28.125 | 625.285 | 625.312 |
| I | 16955.98 | 28.125 | 625.250 | 625.277 |
| J | 16965.98 | 28.125 | 625.214 | 625.231 |
| K | 16975.98 | 28.125 | 625.178 | 625.183 |
| ℄ PIER 2 | 16984.81 | 28.125 | 625.146 | 625.146 |
| L | 16994.81 | 28.125 | 625.109 | 625.117 |
| M | 17004.81 | 28.125 | 625.072 | 625.094 |
| N | 17014.81 | 28.125 | 625.034 | 625.064 |
| O | 17024.81 | 28.125 | 624.996 | 625.023 |
| P | 17034.81 | 28.125 | 624.958 | 624.972 |
| ℄ APP. BRG. PIER 3 | 17042.14 | 28.125 | 624.930 | 624.930 |

## STRINGERS No. 5 & 12

| LOCATION | STATION | OFFSET | THEORETICAL GRADE ELEVATIONS | THEORETICAL GRADE ELEVATIONS ADJUSTED FOR DEAD LOAD DEFLECTION |
|---|---|---|---|---|
| BK. NORTH ABUT. | 16856.40 | 6.125 | 626.013 | 626.013 |
| ℄ BRG. N. ABUT. | 16858.65 | 6.125 | 626.006 | 626.006 |
| A | 16868.65 | 6.125 | 625.974 | 625.952 |
| B | 16878.65 | 6.125 | 625.941 | 625.970 |
| C | 16888.65 | 6.125 | 625.908 | 625.926 |
| D | 16898.65 | 6.125 | 625.875 | 625.852 |
| E | 16908.65 | 6.125 | 625.841 | 625.848 |
| ℄ PIER 1 | 16915.98 | 6.125 | 625.816 | 625.816 |
| F | 16925.98 | 6.125 | 625.782 | 625.789 |
| G | 16935.98 | 6.125 | 625.747 | 625.766 |
| H | 16945.98 | 6.125 | 625.712 | 625.739 |
| I | 16955.98 | 6.125 | 625.677 | 625.704 |
| J | 16965.98 | 6.125 | 625.641 | 625.658 |
| K | 16975.98 | 6.125 | 625.605 | 625.610 |
| ℄ PIER 2 | 16984.81 | 6.125 | 625.573 | 625.573 |
| L | 16994.81 | 6.125 | 625.536 | 625.544 |
| M | 17004.81 | 6.125 | 625.499 | 625.521 |
| N | 17014.81 | 6.125 | 625.461 | 625.491 |
| O | 17024.81 | 6.125 | 625.423 | 625.450 |
| P | 17034.81 | 6.125 | 625.385 | 625.399 |
| ℄ APP. BRG. PIER 3 | 17042.14 | 6.125 | 625.357 | 625.357 |

## STRINGERS No. 7 & 10

| LOCATION | STATION | OFFSET | THEORETICAL GRADE ELEVATIONS | THEORETICAL GRADE ELEVATIONS ADJUSTED FOR DEAD LOAD DEFLECTION |
|---|---|---|---|---|
| BK. NORTH ABUT. | 16856.40 | -8.540 | 625.575 | 625.575 |
| ℄ BRG. N. ABUT. | 16858.65 | -8.540 | 625.568 | 625.568 |
| A | 16868.65 | -8.540 | 625.536 | 625.554 |
| B | 16878.65 | -8.540 | 625.503 | 625.532 |
| C | 16888.65 | -8.540 | 625.470 | 625.495 |
| D | 16898.65 | -8.540 | 625.437 | 625.455 |
| E | 16908.65 | -8.540 | 625.403 | 625.408 |
| ℄ PIER 1 | 16915.98 | -8.540 | 625.378 | 625.378 |
| F | 16925.98 | -8.540 | 625.344 | 625.351 |
| G | 16935.98 | -8.540 | 625.309 | 625.328 |
| H | 16945.98 | -8.540 | 625.274 | 625.301 |
| I | 16955.98 | -8.540 | 625.239 | 625.266 |
| J | 16965.98 | -8.540 | 625.203 | 625.220 |
| K | 16975.98 | -8.540 | 625.167 | 625.172 |
| ℄ PIER 2 | 16984.81 | -8.540 | 625.135 | 625.135 |
| L | 16994.81 | -8.540 | 625.098 | 625.106 |
| M | 17004.81 | -8.540 | 625.061 | 625.083 |
| N | 17014.81 | -8.540 | 625.023 | 625.053 |
| O | 17024.81 | -8.540 | 624.985 | 625.012 |
| P | 17034.81 | -8.540 | 624.947 | 624.961 |
| ℄ APP. BRG. PIER 3 | 17042.14 | -8.540 | 624.919 | 624.919 |

## CONSTRUCTION JOINT

| LOCATION | STATION | OFFSET | THEORETICAL GRADE ELEVATIONS | THEORETICAL GRADE ELEVATIONS ADJUSTED FOR DEAD LOAD DEFLECTION |
|---|---|---|---|---|
| BK. NORTH ABUT. | 16856.40 | 24.000 | 625.672 | 625.672 |
| ℄ BRG. N. ABUT. | 16858.65 | 24.000 | 625.664 | 625.664 |
| A | 16868.65 | 24.000 | 625.632 | 625.651 |
| B | 16878.65 | 24.000 | 625.600 | 625.630 |
| C | 16888.65 | 24.000 | 625.567 | 625.596 |
| D | 16898.65 | 24.000 | 625.533 | 625.552 |
| E | 16908.65 | 24.000 | 625.500 | 625.505 |
| ℄ PIER 1 | 16915.98 | 24.000 | 625.475 | 625.475 |
| F | 16925.98 | 24.000 | 625.441 | 625.447 |
| G | 16935.98 | 24.000 | 625.406 | 625.425 |
| H | 16945.98 | 24.000 | 625.371 | 625.393 |
| I | 16955.98 | 24.000 | 625.335 | 625.362 |
| J | 16965.98 | 24.000 | 625.300 | 625.318 |
| K | 16975.98 | 24.000 | 625.264 | 625.269 |
| ℄ PIER 2 | 16984.81 | 24.000 | 625.231 | 625.231 |
| L | 16994.81 | 24.000 | 625.195 | 625.202 |
| M | 17004.81 | 24.000 | 625.157 | 625.180 |
| N | 17014.81 | 24.000 | 625.120 | 625.151 |
| O | 17024.81 | 24.000 | 625.082 | 625.110 |
| P | 17034.81 | 24.000 | 625.044 | 625.058 |
| ℄ APP. BRG. PIER 3 | 17042.14 | 24.000 | 625.015 | 625.015 |

## P.G.L.

| LOCATION | STATION | OFFSET | THEORETICAL GRADE ELEVATIONS | THEORETICAL GRADE ELEVATIONS ADJUSTED FOR DEAD LOAD DEFLECTION |
|---|---|---|---|---|
| BK. NORTH ABUT. | 16856.40 | 0.000 | 626.105 | 626.105 |
| ℄ BRG. N. ABUT. | 16858.65 | 0.000 | 626.102 | 626.102 |
| A | 16868.65 | 0.000 | 626.070 | 626.088 |
| B | 16878.65 | 0.000 | 626.037 | 626.066 |
| C | 16888.65 | 0.000 | 626.004 | 626.033 |
| D | 16898.65 | 0.000 | 625.971 | 625.989 |
| E | 16908.65 | 0.000 | 625.937 | 625.942 |
| ℄ PIER 1 | 16915.98 | 0.000 | 625.912 | 625.912 |
| F | 16925.98 | 0.000 | 625.878 | 625.885 |
| G | 16935.98 | 0.000 | 625.843 | 625.862 |
| H | 16945.98 | 0.000 | 625.808 | 625.835 |
| I | 16955.98 | 0.000 | 625.773 | 625.800 |
| J | 16965.98 | 0.000 | 625.737 | 625.754 |
| K | 16975.98 | 0.000 | 625.701 | 625.706 |
| ℄ PIER 2 | 16984.81 | 0.000 | 625.669 | 625.669 |
| L | 16994.81 | 0.000 | 625.632 | 625.640 |
| M | 17004.81 | 0.000 | 625.595 | 625.617 |
| N | 17014.81 | 0.000 | 625.557 | 625.587 |
| O | 17024.81 | 0.000 | 625.519 | 625.546 |
| P | 17034.81 | 0.000 | 625.481 | 625.495 |
| ℄ APP. BRG. PIER 3 | 17042.14 | 0.000 | 625.453 | 625.453 |

## STRINGERS No. 8 & 9

| LOCATION | STATION | OFFSET | THEORETICAL GRADE ELEVATIONS | THEORETICAL GRADE ELEVATIONS ADJUSTED FOR DEAD LOAD DEFLECTION |
|---|---|---|---|---|
| BK. NORTH ABUT. | 16856.40 | -15.875 | 625.861 | 625.861 |
| ℄ BRG. N. ABUT. | 16858.65 | -15.875 | 625.854 | 625.854 |
| A | 16868.65 | -15.875 | 625.822 | 625.840 |
| B | 16878.65 | -15.875 | 625.789 | 625.818 |
| C | 16888.65 | -15.875 | 625.756 | 625.785 |
| D | 16898.65 | -15.875 | 625.723 | 625.741 |
| E | 16908.65 | -15.875 | 625.689 | 625.694 |
| ℄ PIER 1 | 16915.98 | -15.875 | 625.664 | 625.664 |
| F | 16925.98 | -15.875 | 625.630 | 625.637 |
| G | 16935.98 | -15.875 | 625.595 | 625.614 |
| H | 16945.98 | -15.875 | 625.560 | 625.587 |
| I | 16955.98 | -15.875 | 625.525 | 625.552 |
| J | 16965.98 | -15.875 | 625.489 | 625.506 |
| K | 16975.98 | -15.875 | 625.452 | 625.458 |
| ℄ PIER 2 | 16984.81 | -15.875 | 625.421 | 625.421 |
| L | 16994.81 | -15.875 | 625.384 | 625.392 |
| M | 17004.81 | -15.875 | 625.347 | 625.360 |
| N | 17014.81 | -15.875 | 625.309 | 625.339 |
| O | 17024.81 | -15.875 | 625.271 | 625.298 |
| P | 17034.81 | -15.875 | 625.233 | 625.247 |
| ℄ APP. BRG. PIER 3 | 17042.14 | -15.875 | 625.205 | 625.205 |

## STRINGERS No. 3 & 14

| LOCATION | STATION | OFFSET | THEORETICAL GRADE ELEVATIONS | THEORETICAL GRADE ELEVATIONS ADJUSTED FOR DEAD LOAD DEFLECTION |
|---|---|---|---|---|
| BK. NORTH ABUT. | 16856.40 | 20.792 | 625.738 | 625.738 |
| ℄ BRG. N. ABUT. | 16858.65 | 20.792 | 625.731 | 625.731 |
| A | 16868.65 | 20.792 | 625.699 | 625.717 |
| B | 16878.65 | 20.792 | 625.666 | 625.695 |
| C | 16888.65 | 20.792 | 625.633 | 625.662 |
| D | 16898.65 | 20.792 | 625.600 | 625.618 |
| E | 16908.65 | 20.792 | 625.566 | 625.571 |
| ℄ PIER 1 | 16915.98 | 20.792 | 625.541 | 625.541 |
| F | 16925.98 | 20.792 | 625.507 | 625.514 |
| G | 16935.98 | 20.792 | 625.472 | 625.491 |
| H | 16945.98 | 20.792 | 625.437 | 625.464 |
| I | 16955.98 | 20.792 | 625.402 | 625.429 |
| J | 16965.98 | 20.792 | 625.366 | 625.383 |
| K | 16975.98 | 20.792 | 625.330 | 625.325 |
| ℄ PIER 2 | 16984.81 | 20.792 | 625.298 | 625.298 |
| L | 16994.81 | 20.792 | 625.261 | 625.265 |
| M | 17004.81 | 20.792 | 625.224 | 625.246 |
| N | 17014.81 | 20.792 | 625.188 | 625.215 |
| O | 17024.81 | 20.792 | 625.148 | 625.175 |
| P | 17034.81 | 20.792 | 625.110 | 625.124 |
| ℄ APP. BRG. PIER 3 | 17042.14 | 20.792 | 625.082 | 625.082 |

## STRINGERS No. 6 & 11

| LOCATION | STATION | OFFSET | THEORETICAL GRADE ELEVATIONS | THEORETICAL GRADE ELEVATIONS ADJUSTED FOR DEAD LOAD DEFLECTION |
|---|---|---|---|---|
| BK. NORTH ABUT. | 16856.40 | -1.208 | 626.090 | 626.090 |
| ℄ BRG. N. ABUT. | 16858.65 | -1.208 | 626.083 | 626.083 |
| A | 16868.65 | -1.208 | 626.051 | 626.069 |
| B | 16878.65 | -1.208 | 626.018 | 626.047 |
| C | 16888.65 | -1.208 | 625.985 | 626.013 |
| D | 16898.65 | -1.208 | 625.952 | 625.970 |
| E | 16908.65 | -1.208 | 625.918 | 625.923 |
| ℄ PIER 1 | 16915.98 | -1.208 | 625.893 | 625.893 |
| F | 16925.98 | -1.208 | 625.859 | 625.866 |
| G | 16935.98 | -1.208 | 625.824 | 625.843 |
| H | 16945.98 | -1.208 | 625.789 | 625.816 |
| I | 16955.98 | -1.208 | 625.754 | 625.781 |
| J | 16965.98 | -1.208 | 625.718 | 625.735 |
| K | 16975.98 | -1.208 | 625.682 | 625.687 |
| ℄ PIER 2 | 16984.81 | -1.208 | 625.650 | 625.650 |
| L | 16994.81 | -1.208 | 625.613 | 625.621 |
| M | 17004.81 | -1.208 | 625.576 | 625.598 |
| N | 17014.81 | -1.208 | 625.538 | 625.568 |
| O | 17024.81 | -1.208 | 625.500 | 625.527 |
| P | 17034.81 | -1.208 | 625.462 | 625.476 |
| ℄ APP. BRG. PIER 3 | 17042.14 | -1.208 | 625.434 | 625.434 |

NOTE:

*Offsets for Stringers 1 & 16, 2 & 15, Construction Joint, Stringers 3 & 14, 4 & 13 and 5 & 12 are taken from the P.G.L toward the outsides of the Bridge.*
*Offsets for Stringers 6 & 11, 7 & 10 and 8 & 9 are taken from P.G.L toward the ℄ I-94.*

STATE OF ILLINOIS
DEPARTMENT OF TRANSPORTATION
TOP OF SLAB ELEVATIONS - II
F.A.I-94 OVER LITTLE CALUMET RIVER
COOK COUNTY

STA. 172 + 54.39 SN 016-0158 (S. BOUND)
SN 016-0159 (N. BOUND)

SCALE DRAWN BY
DATE NOV. 199 CHECKED BY

169

## STRINGERS No. 1 & 16

| LOCATION | STATION | OFFSET | THEORETICAL GRADE ELEVATIONS | THEORETICAL GRADE ELEVATIONS ADJUSTED FOR DEAD LOAD DEFLECTION |
|---|---|---|---|---|
| ℄ TRUSS BRG. PIER No.3 | 17044.39 | 35.458 | 624.768 | 624.773 |
| Q | 17053.14 | 35.458 | 624.734 | 624.780 |
| R | 17061.89 | 35.458 | 624.700 | 624.776 |
| S | 17070.64 | 35.458 | 624.665 | 624.757 |
| T | 17079.39 | 35.458 | 624.630 | 624.727 |
| U | 17088.14 | 35.458 | 624.595 | 624.726 |
| V | 17096.89 | 35.458 | 624.559 | 624.714 |
| W | 17105.64 | 35.458 | 624.523 | 624.687 |
| X | 17114.39 | 35.458 | 624.487 | 624.648 |
| Y | 17123.14 | 35.458 | 624.451 | 624.646 |
| Z | 17131.89 | 35.458 | 624.414 | 624.632 |
| A1 | 17140.64 | 35.458 | 624.377 | 624.602 |
| B1 | 17149.39 | 35.458 | 624.340 | 624.563 |
| C1 | 17158.14 | 35.458 | 624.303 | 624.553 |
| D1 | 17166.89 | 35.458 | 624.265 | 624.532 |
| E1 | 17175.64 | 35.458 | 624.227 | 624.497 |
| F1 | 17184.39 | 35.458 | 624.188 | 624.450 |
| G1 | 17193.14 | 35.458 | 624.150 | 624.438 |
| H1 | 17201.89 | 35.458 | 624.111 | 624.415 |
| I1 | 17210.64 | 35.458 | 624.072 | 624.377 |
| J1 | 17219.39 | 35.458 | 624.032 | 624.327 |
| K1 | 17228.14 | 35.458 | 623.992 | 624.307 |
| L1 | 17236.89 | 35.458 | 623.952 | 624.275 |
| M1 | 17245.64 | 35.458 | 623.912 | 624.228 |
| N1 | 17254.39 | 35.458 | 623.871 | 624.169 |
| O1 | 17263.14 | 35.458 | 623.831 | 624.146 |
| P1 | 17271.89 | 35.458 | 623.789 | 624.112 |
| Q1 | 17280.64 | 35.458 | 623.748 | 624.062 |
| R1 | 17289.39 | 35.458 | 623.706 | 624.001 |
| S1 | 17298.14 | 35.458 | 623.664 | 623.969 |
| T1 | 17306.89 | 35.458 | 623.622 | 623.926 |
| U1 | 17315.64 | 35.458 | 623.579 | 623.868 |
| V1 | 17324.39 | 35.458 | 623.537 | 623.798 |
| W1 | 17333.14 | 35.458 | 623.494 | 623.764 |
| X1 | 17341.89 | 35.458 | 623.450 | 623.718 |
| Y1 | 17350.64 | 35.458 | 623.406 | 623.657 |
| Z1 | 17359.39 | 35.458 | 623.362 | 623.585 |
| A2 | 17368.14 | 35.458 | 623.318 | 623.543 |
| B2 | 17376.89 | 35.458 | 623.274 | 623.491 |
| C2 | 17385.64 | 35.458 | 623.229 | 623.424 |
| D2 | 17394.39 | 35.458 | 623.184 | 623.345 |
| E2 | 17403.14 | 35.458 | 623.138 | 623.302 |
| F2 | 17411.89 | 35.458 | 623.093 | 623.248 |
| G2 | 17420.64 | 35.458 | 623.047 | 623.178 |
| H2 | 17429.39 | 35.458 | 623.000 | 623.098 |
| I2 | 17438.14 | 35.458 | 622.954 | 623.046 |
| J2 | 17446.89 | 35.458 | 622.907 | 622.984 |
| K2 | 17455.64 | 35.458 | 622.860 | 622.906 |
| ℄ TRUSS BRG. PIER No.4 | 17464.39 | 35.458 | 622.813 | 622.818 |

## STRINGERS No. 2 & 15

| LOCATION | STATION | OFFSET | THEORETICAL GRADE ELEVATIONS | THEORETICAL GRADE ELEVATIONS ADJUSTED FOR DEAD LOAD DEFLECTION |
|---|---|---|---|---|
| ℄ TRUSS BRG. PIER No.3 | 17044.39 | 28.125 | 624.921 | 624.937 |
| Q | 17053.14 | 28.125 | 624.887 | 624.947 |
| R | 17061.89 | 28.125 | 624.853 | 624.946 |
| S | 17070.64 | 28.125 | 624.818 | 624.929 |
| T | 17079.39 | 28.125 | 624.783 | 624.900 |
| U | 17088.14 | 28.125 | 624.748 | 624.899 |
| V | 17096.89 | 28.125 | 624.712 | 624.887 |
| W | 17105.64 | 28.125 | 624.676 | 624.860 |
| X | 17114.39 | 28.125 | 624.640 | 624.821 |
| Y | 17123.14 | 28.125 | 624.604 | 624.819 |
| Z | 17131.89 | 28.125 | 624.567 | 624.805 |
| A1 | 17140.64 | 28.125 | 624.530 | 624.775 |
| B1 | 17149.39 | 28.125 | 624.493 | 624.736 |
| C1 | 17158.14 | 28.125 | 624.456 | 624.726 |
| D1 | 17166.89 | 28.125 | 624.418 | 624.705 |
| E1 | 17175.64 | 28.125 | 624.380 | 624.670 |
| F1 | 17184.39 | 28.125 | 624.341 | 624.623 |
| G1 | 17193.14 | 28.125 | 624.303 | 624.611 |
| H1 | 17201.89 | 28.125 | 624.264 | 624.588 |
| I1 | 17210.64 | 28.125 | 624.225 | 624.550 |
| J1 | 17219.39 | 28.125 | 624.185 | 624.500 |
| K1 | 17228.14 | 28.125 | 624.145 | 624.480 |
| L1 | 17236.89 | 28.125 | 624.105 | 624.448 |
| M1 | 17245.64 | 28.125 | 624.065 | 624.401 |
| N1 | 17254.39 | 28.125 | 624.025 | 624.342 |
| O1 | 17263.14 | 28.125 | 623.984 | 624.319 |
| P1 | 17271.89 | 28.125 | 623.942 | 624.285 |
| Q1 | 17280.64 | 28.125 | 623.901 | 624.235 |
| R1 | 17289.39 | 28.125 | 623.859 | 624.174 |
| S1 | 17298.14 | 28.125 | 623.817 | 624.142 |
| T1 | 17306.89 | 28.125 | 623.775 | 624.099 |
| U1 | 17315.64 | 28.125 | 623.732 | 624.041 |
| V1 | 17324.39 | 28.125 | 623.690 | 623.971 |
| W1 | 17333.14 | 28.125 | 623.647 | 623.936 |
| X1 | 17341.89 | 28.125 | 623.603 | 623.891 |
| Y1 | 17350.64 | 28.125 | 623.559 | 623.830 |
| Z1 | 17359.39 | 28.125 | 623.515 | 623.758 |
| A2 | 17368.14 | 28.125 | 623.471 | 623.716 |
| B2 | 17376.89 | 28.125 | 623.427 | 623.664 |
| C2 | 17385.64 | 28.125 | 623.382 | 623.597 |
| D2 | 17394.39 | 28.125 | 623.337 | 623.518 |
| E2 | 17403.14 | 28.125 | 623.291 | 623.475 |
| F2 | 17411.89 | 28.125 | 623.246 | 623.421 |
| G2 | 17420.64 | 28.125 | 623.200 | 623.351 |
| H2 | 17429.39 | 28.125 | 623.153 | 623.271 |
| I2 | 17438.14 | 28.125 | 623.107 | 623.218 |
| J2 | 17446.89 | 28.125 | 623.060 | 623.153 |
| K2 | 17455.64 | 28.125 | 623.013 | 623.073 |
| ℄ TRUSS BRG. PIER No.4 | 17464.39 | 28.125 | 622.966 | 622.982 |

## STRINGERS No. 3 & 14

| LOCATION | STATION | OFFSET | THEORETICAL GRADE ELEVATIONS | THEORETICAL GRADE ELEVATIONS ADJUSTED FOR DEAD LOAD DEFLECTION |
|---|---|---|---|---|
| ℄ TRUSS BRG. PIER No.3 | 17044.39 | 20.792 | 625.073 | 625.096 |
| Q | 17053.14 | 20.792 | 625.039 | 625.108 |
| R | 17061.89 | 20.792 | 625.005 | 625.109 |
| S | 17070.64 | 20.792 | 624.970 | 625.094 |
| T | 17079.39 | 20.792 | 624.935 | 625.065 |
| U | 17088.14 | 20.792 | 624.900 | 625.064 |
| V | 17096.89 | 20.792 | 624.864 | 625.052 |
| W | 17105.64 | 20.792 | 624.828 | 625.024 |
| X | 17114.39 | 20.792 | 624.792 | 624.986 |
| Y | 17123.14 | 20.792 | 624.756 | 624.983 |
| Z | 17131.89 | 20.792 | 624.719 | 624.969 |
| A1 | 17140.64 | 20.792 | 624.682 | 624.940 |
| B1 | 17149.39 | 20.792 | 624.645 | 624.900 |
| C1 | 17158.14 | 20.792 | 624.608 | 624.891 |
| D1 | 17166.89 | 20.792 | 624.570 | 624.870 |
| E1 | 17175.64 | 20.792 | 624.532 | 624.834 |
| F1 | 17184.39 | 20.792 | 624.493 | 624.788 |
| G1 | 17193.14 | 20.792 | 624.455 | 624.776 |
| H1 | 17201.89 | 20.792 | 624.416 | 624.753 |
| I1 | 17210.64 | 20.792 | 624.377 | 624.714 |
| J1 | 17219.39 | 20.792 | 624.337 | 624.665 |
| K1 | 17228.14 | 20.792 | 624.298 | 624.644 |
| L1 | 17236.89 | 20.792 | 624.257 | 624.612 |
| M1 | 17245.64 | 20.792 | 624.217 | 624.565 |
| N1 | 17254.39 | 20.792 | 624.177 | 624.507 |
| O1 | 17263.14 | 20.792 | 624.136 | 624.484 |
| P1 | 17271.89 | 20.792 | 624.095 | 624.449 |
| Q1 | 17280.64 | 20.792 | 624.053 | 624.400 |
| R1 | 17289.39 | 20.792 | 624.011 | 624.339 |
| S1 | 17298.14 | 20.792 | 623.969 | 624.307 |
| T1 | 17306.89 | 20.792 | 623.927 | 624.264 |
| U1 | 17315.64 | 20.792 | 623.884 | 624.205 |
| V1 | 17324.39 | 20.792 | 623.842 | 624.136 |
| W1 | 17333.14 | 20.792 | 623.798 | 624.101 |
| X1 | 17341.89 | 20.792 | 623.755 | 624.055 |
| Y1 | 17350.64 | 20.792 | 623.711 | 623.995 |
| Z1 | 17359.39 | 20.792 | 623.667 | 623.922 |
| A2 | 17368.14 | 20.792 | 623.623 | 623.881 |
| B2 | 17376.89 | 20.792 | 623.579 | 623.829 |
| C2 | 17385.64 | 20.792 | 623.534 | 623.761 |
| D2 | 17394.39 | 20.792 | 623.489 | 623.682 |
| E2 | 17403.14 | 20.792 | 623.443 | 623.639 |
| F2 | 17411.89 | 20.792 | 623.398 | 623.585 |
| G2 | 17420.64 | 20.792 | 623.352 | 623.516 |
| H2 | 17429.39 | 20.792 | 623.305 | 623.435 |
| I2 | 17438.14 | 20.792 | 623.259 | 623.383 |
| J2 | 17446.89 | 20.792 | 623.212 | 623.316 |
| K2 | 17455.64 | 20.792 | 623.165 | 623.234 |
| ℄ TRUSS BRG. PIER No.4 | 17464.39 | 20.792 | 623.118 | 623.141 |

NOTE:

OFFSETS ARE GIVEN FROM PGL LOOKING UP STATION FOR STRINGER NOS. 1 THROUGH 8, AND LOOKING DOWN STATION FOR STRINGER NOS. 9 THROUGH 16

STATE OF ILLINOIS
DEPARTMENT OF TRANSPORTATION
TOP OF SLAB ELEVATIONS - III
F.A.I.-94 OVER LITTLE CALUMET RIVER
COOK COUNTY

STA. 172 + 54.39 SN 016-0158 (S.BOUND)
SN 016-0159 (N.BOUND)

SCALE DRAWN BY

DATE NOV. 1991 CHECKED BY

## STRINGERS No. 4 & 13

| LOCATION | STATION | OFFSET | THEORETICAL GRADE ELEVATIONS | THEORETICAL GRADE ELEVATIONS ADJUSTED FOR DEAD LOAD DEFLECTION |
|---|---|---|---|---|
| ℄ TRUSS BRG. PIER No.3 | 17044.39 | 13.458 | 625.226 | 625.254 |
| Q | 17053.14 | 13.458 | 625.192 | 625.266 |
| R | 17061.89 | 13.458 | 625.158 | 625.268 |
| S | 17070.64 | 13.458 | 625.123 | 625.254 |
| T | 17079.39 | 13.458 | 625.088 | 625.230 |
| U | 17088.14 | 13.458 | 625.053 | 625.228 |
| V | 17096.89 | 13.458 | 625.017 | 625.216 |
| W | 17105.64 | 13.458 | 624.981 | 625.189 |
| X | 17114.39 | 13.458 | 624.945 | 625.150 |
| Y | 17123.14 | 13.458 | 624.909 | 625.148 |
| Z | 17131.89 | 13.458 | 624.872 | 625.134 |
| A1 | 17140.64 | 13.458 | 624.835 | 625.104 |
| B1 | 17149.39 | 13.458 | 624.798 | 625.065 |
| C1 | 17158.14 | 13.458 | 624.761 | 625.056 |
| D1 | 17166.89 | 13.458 | 624.723 | 625.034 |
| E1 | 17175.64 | 13.458 | 624.685 | 624.999 |
| F1 | 17184.39 | 13.458 | 624.646 | 624.952 |
| G1 | 17193.14 | 13.458 | 624.608 | 624.940 |
| H1 | 17201.89 | 13.458 | 624.569 | 624.917 |
| I1 | 17210.64 | 13.458 | 624.530 | 624.879 |
| J1 | 17219.39 | 13.458 | 624.490 | 624.829 |
| K1 | 17228.14 | 13.458 | 624.450 | 624.809 |
| L1 | 17236.89 | 13.458 | 624.410 | 624.777 |
| M1 | 17245.64 | 13.458 | 624.370 | 624.730 |
| N1 | 17254.39 | 13.458 | 624.329 | 624.671 |
| O1 | 17263.14 | 13.458 | 624.289 | 624.649 |
| P1 | 17271.89 | 13.458 | 624.247 | 624.614 |
| Q1 | 17280.64 | 13.458 | 624.206 | 624.564 |
| R1 | 17289.39 | 13.458 | 624.164 | 624.504 |
| S1 | 17298.14 | 13.458 | 624.122 | 624.471 |
| T1 | 17306.89 | 13.458 | 624.080 | 624.428 |
| U1 | 17315.64 | 13.458 | 624.037 | 624.370 |
| V1 | 17324.39 | 13.458 | 623.995 | 624.300 |
| W1 | 17333.14 | 13.458 | 623.952 | 624.266 |
| X1 | 17341.89 | 13.458 | 623.908 | 624.220 |
| Y1 | 17350.64 | 13.458 | 623.864 | 624.159 |
| Z1 | 17359.39 | 13.458 | 623.820 | 624.087 |
| A2 | 17368.14 | 13.458 | 623.776 | 624.045 |
| B2 | 17376.89 | 13.458 | 623.732 | 623.993 |
| C2 | 17385.64 | 13.458 | 623.687 | 623.926 |
| D2 | 17394.39 | 13.458 | 623.642 | 623.847 |
| E2 | 17403.14 | 13.458 | 623.596 | 623.804 |
| F2 | 17411.89 | 13.458 | 623.551 | 623.750 |
| G2 | 17420.64 | 13.458 | 623.505 | 623.681 |
| H2 | 17429.39 | 13.458 | 623.458 | 623.600 |
| I2 | 17438.14 | 13.458 | 623.412 | 623.543 |
| J2 | 17446.89 | 13.458 | 623.365 | 623.475 |
| K2 | 17455.64 | 13.458 | 623.318 | 623.392 |
| ℄ TRUSS BRG. PIER No.4 | 17464.39 | 13.458 | 623.271 | 623.298 |

## STRINGERS No. 5 & 12

| LOCATION | STATION | OFFSET | THEORETICAL GRADE ELEVATIONS | THEORETICAL GRADE ELEVATIONS ADJUSTED FOR DEAD LOAD DEFLECTION |
|---|---|---|---|---|
| ℄ TRUSS BRG. PIER No.3 | 17044.39 | 6.125 | 625.348 | 625.376 |
| Q | 17053.14 | 6.125 | 625.314 | 625.388 |
| R | 17061.89 | 6.125 | 625.280 | 625.390 |
| S | 17070.64 | 6.125 | 625.245 | 625.376 |
| T | 17079.39 | 6.125 | 625.210 | 625.352 |
| U | 17088.14 | 6.125 | 625.175 | 625.350 |
| V | 17096.89 | 6.125 | 625.139 | 625.338 |
| W | 17105.64 | 6.125 | 625.103 | 625.311 |
| X | 17114.39 | 6.125 | 625.067 | 625.272 |
| Y | 17123.14 | 6.125 | 625.031 | 625.270 |
| Z | 17131.89 | 6.125 | 624.994 | 625.256 |
| A1 | 17140.64 | 6.125 | 624.957 | 625.226 |
| B1 | 17149.39 | 6.125 | 624.920 | 625.187 |
| C1 | 17158.14 | 6.125 | 624.883 | 625.178 |
| D1 | 17166.89 | 6.125 | 624.845 | 625.156 |
| E1 | 17175.64 | 6.125 | 624.807 | 625.121 |
| F1 | 17184.39 | 6.125 | 624.768 | 625.074 |
| G1 | 17193.14 | 6.125 | 624.730 | 625.062 |
| H1 | 17201.89 | 6.125 | 624.691 | 625.039 |
| I1 | 17210.64 | 6.125 | 624.652 | 625.001 |
| J1 | 17219.39 | 6.125 | 624.612 | 624.951 |
| K1 | 17228.14 | 6.125 | 624.572 | 624.931 |
| L1 | 17236.89 | 6.125 | 624.532 | 624.899 |
| M1 | 17245.64 | 6.125 | 624.492 | 624.850 |
| N1 | 17254.39 | 6.125 | 624.452 | 624.793 |
| O1 | 17263.14 | 6.125 | 624.411 | 624.771 |
| P1 | 17271.89 | 6.125 | 624.369 | 624.736 |
| Q1 | 17280.64 | 6.125 | 624.328 | 624.686 |
| R1 | 17289.39 | 6.125 | 624.286 | 624.626 |
| S1 | 17298.14 | 6.125 | 624.244 | 624.593 |
| T1 | 17306.89 | 6.125 | 624.202 | 624.550 |
| U1 | 17315.64 | 6.125 | 624.159 | 624.492 |
| V1 | 17324.39 | 6.125 | 624.117 | 624.422 |
| W1 | 17333.14 | 6.125 | 624.074 | 624.388 |
| X1 | 17341.89 | 6.125 | 624.030 | 624.342 |
| Y1 | 17350.64 | 6.125 | 623.986 | 624.281 |
| Z1 | 17359.39 | 6.125 | 623.942 | 624.209 |
| A2 | 17368.14 | 6.125 | 623.898 | 624.167 |
| B2 | 17376.89 | 6.125 | 623.854 | 624.115 |
| C2 | 17385.64 | 6.125 | 623.809 | 624.048 |
| D2 | 17394.39 | 6.125 | 623.764 | 623.969 |
| E2 | 17403.14 | 6.125 | 623.718 | 623.926 |
| F2 | 17411.89 | 6.125 | 623.673 | 623.872 |
| G2 | 17420.64 | 6.125 | 623.627 | 623.803 |
| H2 | 17429.39 | 6.125 | 623.580 | 623.722 |
| I2 | 17438.14 | 6.125 | 623.534 | 623.665 |
| J2 | 17446.89 | 6.125 | 623.487 | 623.597 |
| K2 | 17455.64 | 6.125 | 623.440 | 623.514 |
| ℄ TRUSS BRG. PIER No.4 | 17464.39 | 6.125 | 623.393 | 623.420 |

## P G L

| LOCATION | STATION | OFFSET | THEORETICAL GRADE ELEVATIONS | THEORETICAL GRADE ELEVATIONS ADJUSTED FOR DEAD LOAD DEFLECTION |
|---|---|---|---|---|
| ℄ TRUSS BRG. PIER No.3 | 17044.39 | 0.000 | 625.444 | 625.468 |
| Q | 17053.14 | 0.000 | 625.410 | 625.480 |
| R | 17061.89 | 0.000 | 625.376 | 625.481 |
| S | 17070.64 | 0.000 | 625.341 | 625.466 |
| T | 17079.39 | 0.000 | 625.306 | 625.440 |
| U | 17088.14 | 0.000 | 625.271 | 625.439 |
| V | 17096.89 | 0.000 | 625.235 | 625.427 |
| W | 17105.64 | 0.000 | 625.199 | 625.399 |
| X | 17114.39 | 0.000 | 625.163 | 625.361 |
| Y | 17123.14 | 0.000 | 625.127 | 625.359 |
| Z | 17131.89 | 0.000 | 625.090 | 625.344 |
| A1 | 17140.64 | 0.000 | 625.053 | 625.315 |
| B1 | 17149.39 | 0.000 | 625.016 | 625.275 |
| C1 | 17158.14 | 0.000 | 624.979 | 625.266 |
| D1 | 17166.89 | 0.000 | 624.941 | 625.245 |
| E1 | 17175.64 | 0.000 | 624.903 | 625.209 |
| F1 | 17184.39 | 0.000 | 624.864 | 625.163 |
| G1 | 17193.14 | 0.000 | 624.826 | 625.151 |
| H1 | 17201.89 | 0.000 | 624.787 | 625.128 |
| I1 | 17210.64 | 0.000 | 624.748 | 625.089 |
| J1 | 17219.39 | 0.000 | 624.708 | 625.040 |
| K1 | 17228.14 | 0.000 | 624.668 | 625.019 |
| L1 | 17236.89 | 0.000 | 624.628 | 624.988 |
| M1 | 17245.64 | 0.000 | 624.588 | 624.941 |
| N1 | 17254.39 | 0.000 | 624.548 | 624.882 |
| O1 | 17263.14 | 0.000 | 624.507 | 624.859 |
| P1 | 17271.89 | 0.000 | 624.465 | 624.825 |
| Q1 | 17280.64 | 0.000 | 624.424 | 624.775 |
| R1 | 17289.39 | 0.000 | 624.382 | 624.714 |
| S1 | 17298.14 | 0.000 | 624.340 | 624.682 |
| T1 | 17306.89 | 0.000 | 624.298 | 624.639 |
| U1 | 17315.64 | 0.000 | 624.255 | 624.580 |
| V1 | 17324.39 | 0.000 | 624.213 | 624.511 |
| W1 | 17333.14 | 0.000 | 624.170 | 624.476 |
| X1 | 17341.89 | 0.000 | 624.126 | 624.430 |
| Y1 | 17350.64 | 0.000 | 624.082 | 624.370 |
| Z1 | 17359.39 | 0.000 | 624.038 | 624.298 |
| A2 | 17368.14 | 0.000 | 623.994 | 624.256 |
| B2 | 17376.89 | 0.000 | 623.950 | 624.204 |
| C2 | 17385.64 | 0.000 | 623.905 | 624.137 |
| D2 | 17394.39 | 0.000 | 623.860 | 624.057 |
| E2 | 17403.14 | 0.000 | 623.814 | 624.014 |
| F2 | 17411.89 | 0.000 | 623.769 | 623.960 |
| G2 | 17420.64 | 0.000 | 623.723 | 623.891 |
| H2 | 17429.39 | 0.000 | 623.676 | 623.811 |
| I2 | 17438.14 | 0.000 | 623.630 | 623.755 |
| J2 | 17446.89 | 0.000 | 623.583 | 623.688 |
| K2 | 17455.64 | 0.000 | 623.536 | 623.606 |
| ℄ TRUSS BRG. PIER No.4 | 17464.39 | 0.000 | 623.489 | 623.513 |

NOTE:

OFFSETS ARE GIVEN FROM PGL LOOKING UP STATION FOR STRINGER NOS. 1 THROUGH 8, AND LOOKING DOWN STATION FOR STRINGER NOS. 9 THROUGH 16

STATE OF ILLINOIS
DEPARTMENT OF TRANSPORTATION
TOP OF SLAB ELEVATIONS - IV
F.A.I.-94 OVER LITTLE CALUMET RIVER
COOK COUNTY

STA. 172+54.39 SN 016-0158 (S. BOUND)
SN 016-0159 (N. BOUND)

SCALE DRAWN BY

DATE NOV 1991 CHECKED BY

* 42(VB-10,12,HB-14,B-11) &
0707.1 BB(R-3 )90

| F.A. ROUTE | SECTION | COUNTY | TOTAL SHEETS | SHEET NO. |
|---|---|---|---|---|
| I-94 | * | COOK | 318 | 180 |
| STA. | | TO STA. | | |
| FED. ROAD DIST. NO. 7 | | ILLINOIS | FEDERAL AID PROJECT | |

SHT. 59 OF 354

## STRINGERS No. 6 & 11

| LOCATION | STATION | OFFSET | THEORETICAL GRADE ELEVATIONS | THEORETICAL GRADE ELEVATIONS ADJUSTED FOR DEAD LOAD DEFLECTION |
|---|---|---|---|---|
| ℄ TRUSS BRG. PIER No.3 | 17044.39 | -1.208 | 625.425 | 625.448 |
| Q | 17053.14 | -1.208 | 625.391 | 625.460 |
| R | 17061.89 | -1.208 | 625.357 | 625.461 |
| S | 17070.64 | -1.208 | 625.322 | 625.446 |
| T | 17079.39 | -1.208 | 625.287 | 625.417 |
| U | 17088.14 | -1.208 | 625.252 | 625.416 |
| V | 17096.89 | -1.208 | 625.216 | 625.404 |
| W | 17105.64 | -1.208 | 625.180 | 625.376 |
| X | 17114.39 | -1.208 | 625.144 | 625.338 |
| Y | 17123.14 | -1.208 | 625.108 | 625.335 |
| Z | 17131.89 | -1.208 | 625.071 | 625.321 |
| A1 | 17140.64 | -1.208 | 625.034 | 625.292 |
| B1 | 17149.39 | -1.208 | 624.997 | 625.252 |
| C1 | 17158.14 | -1.208 | 624.960 | 625.243 |
| D1 | 17166.89 | -1.208 | 624.922 | 625.222 |
| E1 | 17175.64 | -1.208 | 624.884 | 625.186 |
| F1 | 17184.39 | -1.208 | 624.845 | 625.140 |
| G1 | 17193.14 | -1.208 | 624.807 | 625.128 |
| H1 | 17201.89 | -1.208 | 624.768 | 625.105 |
| I1 | 17210.64 | -1.208 | 624.729 | 625.066 |
| J1 | 17219.39 | -1.208 | 624.689 | 625.017 |
| K1 | 17228.14 | -1.208 | 624.649 | 624.996 |
| L1 | 17236.89 | -1.208 | 624.609 | 624.964 |
| M1 | 17245.64 | -1.208 | 624.569 | 624.917 |
| N1 | 17254.39 | -1.208 | 624.528 | 624.858 |
| O1 | 17263.14 | -1.208 | 624.488 | 624.836 |
| P1 | 17271.89 | -1.208 | 624.446 | 624.801 |
| Q1 | 17280.64 | -1.208 | 624.405 | 624.752 |
| R1 | 17289.39 | -1.208 | 624.363 | 624.691 |
| S1 | 17298.14 | -1.208 | 624.321 | 624.659 |
| T1 | 17306.89 | -1.208 | 624.279 | 624.616 |
| U1 | 17315.64 | -1.208 | 624.236 | 624.557 |
| V1 | 17324.39 | -1.208 | 624.194 | 624.488 |
| W1 | 17333.14 | -1.208 | 624.151 | 624.453 |
| X1 | 17341.89 | -1.208 | 624.107 | 624.407 |
| Y1 | 17350.64 | -1.208 | 624.063 | 624.347 |
| Z1 | 17359.39 | -1.208 | 624.019 | 624.274 |
| A2 | 17368.14 | -1.208 | 623.975 | 624.233 |
| B2 | 17376.89 | -1.208 | 623.931 | 624.181 |
| C2 | 17385.64 | -1.208 | 623.886 | 624.113 |
| D2 | 17394.39 | -1.208 | 623.841 | 624.034 |
| E2 | 17403.14 | -1.208 | 623.795 | 623.991 |
| F2 | 17411.89 | -1.208 | 623.750 | 623.937 |
| G2 | 17420.64 | -1.208 | 623.704 | 623.868 |
| H2 | 17429.39 | -1.208 | 623.658 | 623.788 |
| I2 | 17438.14 | -1.208 | 623.611 | 623.735 |
| J2 | 17446.89 | -1.208 | 623.564 | 623.668 |
| K2 | 17455.64 | -1.208 | 623.517 | 623.586 |
| ℄ TRUSS BRG. PIER No.4 | 17464.39 | -1.208 | 623.470 | 623.493 |

## STRINGERS No. 7 & 10

| LOCATION | STATION | OFFSET | THEORETICAL GRADE ELEVATIONS | THEORETICAL GRADE ELEVATIONS ADJUSTED FOR DEAD LOAD DEFLECTION |
|---|---|---|---|---|
| ℄ TRUSS BRG. PIER No.3 | 17044.39 | -8.540 | 625.310 | 625.326 |
| Q | 17053.14 | -8.540 | 625.276 | 625.336 |
| R | 17061.89 | -8.540 | 625.242 | 625.335 |
| S | 17070.64 | -8.540 | 625.207 | 625.318 |
| T | 17079.39 | -8.540 | 625.172 | 625.289 |
| U | 17088.14 | -8.540 | 625.137 | 625.288 |
| V | 17096.89 | -8.540 | 625.101 | 625.276 |
| W | 17105.64 | -8.540 | 625.065 | 625.249 |
| X | 17114.39 | -8.540 | 625.029 | 625.210 |
| Y | 17123.14 | -8.540 | 624.993 | 625.208 |
| Z | 17131.89 | -8.540 | 624.958 | 625.194 |
| A1 | 17140.64 | -8.540 | 624.919 | 625.164 |
| B1 | 17149.39 | -8.540 | 624.882 | 625.125 |
| C1 | 17158.14 | -8.540 | 624.845 | 625.115 |
| D1 | 17166.89 | -8.540 | 624.807 | 625.094 |
| E1 | 17175.64 | -8.540 | 624.769 | 625.059 |
| F1 | 17184.39 | -8.540 | 624.730 | 625.012 |
| G1 | 17193.14 | -8.540 | 624.692 | 625.000 |
| H1 | 17201.89 | -8.540 | 624.653 | 624.977 |
| I1 | 17210.64 | -8.540 | 624.614 | 624.939 |
| J1 | 17219.39 | -8.540 | 624.574 | 624.889 |
| K1 | 17228.14 | -8.540 | 624.534 | 624.869 |
| L1 | 17236.89 | -8.540 | 624.494 | 624.837 |
| M1 | 17245.64 | -8.540 | 624.454 | 624.790 |
| N1 | 17254.39 | -8.540 | 624.413 | 624.731 |
| O1 | 17263.14 | -8.540 | 624.373 | 624.708 |
| P1 | 17271.89 | -8.540 | 624.331 | 624.674 |
| Q1 | 17280.64 | -8.540 | 624.290 | 624.624 |
| R1 | 17289.39 | -8.540 | 624.248 | 624.563 |
| S1 | 17298.14 | -8.540 | 624.206 | 624.531 |
| T1 | 17306.89 | -8.540 | 624.164 | 624.488 |
| U1 | 17315.64 | -8.540 | 624.121 | 624.430 |
| V1 | 17324.39 | -8.540 | 624.079 | 624.360 |
| W1 | 17333.14 | -8.540 | 624.036 | 624.326 |
| X1 | 17341.89 | -8.540 | 623.992 | 624.280 |
| Y1 | 17350.64 | -8.540 | 623.948 | 624.219 |
| Z1 | 17359.39 | -8.540 | 623.904 | 624.147 |
| A2 | 17368.14 | -8.540 | 623.860 | 624.105 |
| B2 | 17376.89 | -8.540 | 623.816 | 624.053 |
| C2 | 17385.64 | -8.540 | 623.771 | 623.986 |
| D2 | 17394.39 | -8.540 | 623.726 | 623.907 |
| E2 | 17403.14 | -8.540 | 623.680 | 623.864 |
| F2 | 17411.89 | -8.540 | 623.635 | 623.810 |
| G2 | 17420.64 | -8.540 | 623.589 | 623.740 |
| H2 | 17429.39 | -8.540 | 623.543 | 623.660 |
| I2 | 17438.14 | -8.540 | 623.496 | 623.607 |
| J2 | 17446.89 | -8.540 | 623.449 | 623.542 |
| K2 | 17455.64 | -8.540 | 623.402 | 623.462 |
| ℄ TRUSS BRG. PIER No.4 | 17464.39 | -8.540 | 623.355 | 623.371 |

## STRINGERS No. 8 & 9

| LOCATION | STATION | OFFSET | THEORETICAL GRADE ELEVATIONS | THEORETICAL GRADE ELEVATIONS ADJUSTED FOR DEAD LOAD DEFLECTION |
|---|---|---|---|---|
| ℄ TRUSS BRG. PIER No.3 | 17044.39 | -15.875 | 625.196 | 625.201 |
| Q | 17053.14 | -15.875 | 625.162 | 625.208 |
| R | 17061.89 | -15.875 | 625.128 | 625.204 |
| S | 17070.64 | -15.875 | 625.093 | 625.185 |
| T | 17079.39 | -15.875 | 625.058 | 625.155 |
| U | 17088.14 | -15.875 | 625.023 | 625.154 |
| V | 17096.89 | -15.875 | 624.987 | 625.142 |
| W | 17105.64 | -15.875 | 624.951 | 625.115 |
| X | 17114.39 | -15.875 | 624.915 | 625.076 |
| Y | 17123.14 | -15.875 | 624.879 | 625.074 |
| Z | 17131.89 | -15.875 | 624.842 | 625.060 |
| A1 | 17140.64 | -15.875 | 624.805 | 625.030 |
| B1 | 17149.39 | -15.875 | 624.768 | 624.991 |
| C1 | 17158.14 | -15.875 | 624.731 | 624.981 |
| D1 | 17166.89 | -15.875 | 624.693 | 624.960 |
| E1 | 17175.64 | -15.875 | 624.655 | 624.925 |
| F1 | 17184.39 | -15.875 | 624.616 | 624.878 |
| G1 | 17193.14 | -15.875 | 624.578 | 624.866 |
| H1 | 17201.89 | -15.875 | 624.539 | 624.843 |
| I1 | 17210.64 | -15.875 | 624.500 | 624.805 |
| J1 | 17219.39 | -15.875 | 624.460 | 624.755 |
| K1 | 17228.14 | -15.875 | 624.421 | 624.735 |
| L1 | 17236.89 | -15.875 | 624.380 | 624.703 |
| M1 | 17245.64 | -15.875 | 624.340 | 624.656 |
| N1 | 17254.39 | -15.875 | 624.300 | 624.597 |
| O1 | 17263.14 | -15.875 | 624.259 | 624.574 |
| P1 | 17271.89 | -15.875 | 624.217 | 624.540 |
| Q1 | 17280.64 | -15.875 | 624.176 | 624.490 |
| R1 | 17289.39 | -15.875 | 624.134 | 624.429 |
| S1 | 17298.14 | -15.875 | 624.092 | 624.397 |
| T1 | 17306.89 | -15.875 | 624.050 | 624.354 |
| U1 | 17315.64 | -15.875 | 624.007 | 624.296 |
| V1 | 17324.39 | -15.875 | 623.965 | 624.226 |
| W1 | 17333.14 | -15.875 | 623.922 | 624.192 |
| X1 | 17341.89 | -15.875 | 623.878 | 624.146 |
| Y1 | 17350.64 | -15.875 | 623.834 | 624.085 |
| Z1 | 17359.39 | -15.875 | 623.790 | 624.013 |
| A2 | 17368.14 | -15.875 | 623.746 | 623.971 |
| B2 | 17376.89 | -15.875 | 623.702 | 623.919 |
| C2 | 17385.64 | -15.875 | 623.657 | 623.852 |
| D2 | 17394.39 | -15.875 | 623.612 | 623.773 |
| E2 | 17403.14 | -15.875 | 623.566 | 623.730 |
| F2 | 17411.89 | -15.875 | 623.521 | 623.676 |
| G2 | 17420.64 | -15.875 | 623.475 | 623.606 |
| H2 | 17429.39 | -15.875 | 623.428 | 623.526 |
| I2 | 17438.14 | -15.875 | 623.382 | 623.475 |
| J2 | 17446.89 | -15.875 | 623.335 | 623.412 |
| K2 | 17455.64 | -15.875 | 623.288 | 623.334 |
| ℄ TRUSS BRG. PIER No.4 | 17464.39 | -15.875 | 623.241 | 623.246 |

NOTE:

OFFSETS ARE GIVEN FROM PCL LOOKING UP STATION FOR STRINGER NOS. 1 THROUGH 8, AND LOOKING DOWN STATION FOR STRINGER NOS. 9 THROUGH 16

STATE OF ILLINOIS
DEPARTMENT OF TRANSPORTATION
TOP OF SLAB ELEVATIONS - V
F.A.I.-94 OVER LITTLE CALUMET RIVER
COOK COUNTY

STA. 172 + 54.39 SN 016-0158 (S. BOUND)
SN 016-0159 (N. BOUND)

SCALE DRAWN BY

DATE NOV. 1991 CHECKED BY

171

* 42(VB-10,12,HB-14,B-11) & 0707.1 HB(R-3 )90

| F.A. ROUTE | SECTION | COUNTY | TOTAL SHEETS | SHEET NO. |
|---|---|---|---|---|
| I-94 | * | COOK | 318 | 181 |
| STA. | TO STA. | | | |
| FED. ROAD DIST. NO. 1 | ILLINOIS | FEDERAL AID PROJECT | | |

SHT. 510 OF S54

## STRINGERS No. 1 & 16

| LOCATION | STATION | OFFSET | THEORETICAL GRADE ELEVATIONS | THEORETICAL GRADE ELEVATIONS ADJUSTED FOR DEAD LOAD DEFLECTION |
|---|---|---|---|---|
| ℄ APP. BRG. PIER 4 | 17466.64 | 35.458 | 622.801 | 622.801 |
| L2 | 17476.64 | 35.458 | 622.746 | 622.764 |
| M2 | 17486.64 | 35.458 | 622.691 | 622.720 |
| N2 | 17496.64 | 35.458 | 622.636 | 622.664 |
| O2 | 17506.64 | 35.458 | 622.580 | 622.596 |
| P2 | 17516.64 | 35.458 | 622.524 | 622.529 |
| ℄ PIER 5 | 17523.97 | 35.458 | 622.483 | 622.483 |
| Q2 | 17533.97 | 35.458 | 622.426 | 622.433 |
| R2 | 17543.97 | 35.458 | 622.369 | 622.387 |
| S2 | 17553.97 | 35.458 | 622.312 | 622.336 |
| T2 | 17563.97 | 35.458 | 622.254 | 622.281 |
| U2 | 17573.97 | 35.458 | 622.196 | 622.212 |
| V2 | 17583.97 | 35.458 | 622.137 | 622.142 |
| ℄ PIER 6 | 17592.80 | 35.458 | 622.085 | 622.085 |
| W2 | 17602.80 | 35.458 | 622.026 | 622.035 |
| X2 | 17612.80 | 35.458 | 621.967 | 621.988 |
| Y2 | 17622.80 | 35.458 | 621.907 | 621.936 |
| Z2 | 17632.80 | 35.458 | 621.846 | 621.873 |
| A3 | 17642.80 | 35.458 | 621.786 | 621.800 |
| ℄ BRG. S. ABUT. | 17650.13 | 35.458 | 621.741 | 621.741 |
| BK. SOUTH ABUT. | 17652.38 | 35.458 | 621.727 | 621.727 |

## STRINGERS No. 4 & 13

| LOCATION | STATION | OFFSET | THEORETICAL GRADE ELEVATIONS | THEORETICAL GRADE ELEVATIONS ADJUSTED FOR DEAD LOAD DEFLECTION |
|---|---|---|---|---|
| ℄ APP. BRG. PIER 4 | 17466.64 | 13.458 | 623.255 | 623.255 |
| L2 | 17476.64 | 13.458 | 623.204 | 623.222 |
| M2 | 17486.64 | 13.458 | 623.149 | 623.172 |
| N2 | 17496.64 | 13.458 | 623.094 | 623.122 |
| O2 | 17506.64 | 13.458 | 623.038 | 623.056 |
| P2 | 17516.64 | 13.458 | 622.982 | 622.987 |
| ℄ PIER 5 | 17522.97 | 13.458 | 622.941 | 622.941 |
| Q2 | 17533.97 | 13.458 | 622.884 | 622.891 |
| R2 | 17543.97 | 13.458 | 622.827 | 622.845 |
| S2 | 17553.97 | 13.458 | 622.770 | 622.796 |
| T2 | 17563.97 | 13.458 | 622.712 | 622.739 |
| U2 | 17573.97 | 13.458 | 622.654 | 622.671 |
| V2 | 17583.97 | 13.458 | 622.595 | 622.600 |
| ℄ PIER 6 | 17592.80 | 13.458 | 622.543 | 622.543 |
| W2 | 17602.80 | 13.458 | 622.484 | 622.493 |
| X2 | 17612.80 | 13.458 | 622.425 | 622.446 |
| Y2 | 17622.80 | 13.458 | 622.365 | 622.394 |
| Z2 | 17632.80 | 13.458 | 622.304 | 622.331 |
| A3 | 17642.80 | 13.458 | 622.244 | 622.258 |
| ℄ BRG. S. ABUT. | 17650.13 | 13.458 | 622.199 | 622.199 |
| BK. SOUTH ABUT. | 17652.38 | 13.458 | 622.185 | 622.185 |

## STRINGERS No. 2 & 15

| LOCATION | STATION | OFFSET | THEORETICAL GRADE ELEVATIONS | THEORETICAL GRADE ELEVATIONS ADJUSTED FOR DEAD LOAD DEFLECTION |
|---|---|---|---|---|
| ℄ APP. BRG. PIER 4 | 17466.64 | 28.125 | 622.954 | 622.954 |
| L2 | 17476.64 | 28.125 | 622.899 | 622.917 |
| M2 | 17486.64 | 28.125 | 622.844 | 622.873 |
| N2 | 17496.64 | 28.125 | 622.788 | 622.817 |
| O2 | 17506.64 | 28.125 | 622.733 | 622.751 |
| P2 | 17516.64 | 28.125 | 622.677 | 622.682 |
| ℄ PIER 5 | 17523.97 | 28.125 | 622.636 | 622.636 |
| Q2 | 17533.97 | 28.125 | 622.579 | 622.586 |
| R2 | 17543.97 | 28.125 | 622.522 | 622.540 |
| S2 | 17553.97 | 28.125 | 622.465 | 622.491 |
| T2 | 17563.97 | 28.125 | 622.407 | 622.434 |
| U2 | 17573.97 | 28.125 | 622.349 | 622.366 |
| V2 | 17583.97 | 28.125 | 622.290 | 622.295 |
| ℄ PIER 6 | 17592.80 | 28.125 | 622.238 | 622.238 |
| W2 | 17602.80 | 28.125 | 622.178 | 622.188 |
| X2 | 17612.80 | 28.125 | 622.120 | 622.141 |
| Y2 | 17622.80 | 28.125 | 622.060 | 622.089 |
| Z2 | 17632.80 | 28.125 | 621.999 | 622.026 |
| A3 | 17642.80 | 28.125 | 621.939 | 621.953 |
| ℄ BRG. S. ABUT. | 17650.13 | 28.125 | 621.894 | 621.894 |
| BK. SOUTH ABUT. | 17652.38 | 28.125 | 621.880 | 621.880 |

## STRINGERS No. 5 & 12

| LOCATION | STATION | OFFSET | THEORETICAL GRADE ELEVATIONS | THEORETICAL GRADE ELEVATIONS ADJUSTED FOR DEAD LOAD DEFLECTION |
|---|---|---|---|---|
| ℄ APP. BRG. PIER 4 | 17466.64 | 6.125 | 622.381 | 622.381 |
| L2 | 17476.64 | 6.125 | 622.326 | 622.344 |
| M2 | 17486.64 | 6.125 | 622.271 | 622.300 |
| N2 | 17496.64 | 6.125 | 622.216 | 622.244 |
| O2 | 17506.64 | 6.125 | 622.160 | 622.178 |
| P2 | 17516.64 | 6.125 | 622.104 | 622.109 |
| ℄ PIER 5 | 17522.97 | 6.125 | 622.063 | 622.063 |
| Q2 | 17533.97 | 6.125 | 622.006 | 622.013 |
| R2 | 17543.97 | 6.125 | 622.949 | 622.967 |
| S2 | 17553.97 | 6.125 | 622.892 | 622.918 |
| T2 | 17563.97 | 6.125 | 622.834 | 622.861 |
| U2 | 17573.97 | 6.125 | 622.776 | 622.793 |
| V2 | 17583.97 | 6.125 | 622.717 | 622.722 |
| ℄ PIER 6 | 17592.80 | 6.125 | 622.665 | 622.665 |
| W2 | 17602.80 | 6.125 | 622.606 | 622.615 |
| X2 | 17612.80 | 6.125 | 622.547 | 622.568 |
| Y2 | 17622.80 | 6.125 | 622.487 | 622.516 |
| Z2 | 17632.80 | 6.125 | 622.426 | 622.453 |
| A3 | 17642.80 | 6.125 | 622.366 | 622.380 |
| ℄ BRG. S. ABUT. | 17650.13 | 6.125 | 622.321 | 622.321 |
| BK. SOUTH ABUT. | 17652.38 | 6.125 | 622.307 | 622.307 |

## STRINGERS No. 7 & 10

| LOCATION | STATION | OFFSET | THEORETICAL GRADE ELEVATIONS | THEORETICAL GRADE ELEVATIONS ADJUSTED FOR DEAD LOAD DEFLECTION |
|---|---|---|---|---|
| ℄ APP. BRG. PIER 4 | 17466.64 | -8.540 | 623.343 | 623.343 |
| L2 | 17476.64 | -8.540 | 623.288 | 623.306 |
| M2 | 17486.64 | -8.540 | 623.233 | 623.262 |
| N2 | 17496.64 | -8.540 | 623.178 | 623.206 |
| O2 | 17506.64 | -8.540 | 623.122 | 623.140 |
| P2 | 17516.64 | -8.540 | 623.066 | 623.071 |
| ℄ PIER 5 | 17523.97 | -8.540 | 623.025 | 623.025 |
| Q2 | 17533.97 | -8.540 | 622.968 | 622.975 |
| R2 | 17543.97 | -8.540 | 622.911 | 622.929 |
| S2 | 17553.97 | -8.540 | 622.854 | 622.880 |
| T2 | 17563.97 | -8.540 | 622.796 | 622.833 |
| U2 | 17573.97 | -8.540 | 622.738 | 622.754 |
| V2 | 17583.97 | -8.540 | 622.679 | 622.684 |
| ℄ PIER 6 | 17592.80 | -8.540 | 622.627 | 622.627 |
| W2 | 17602.80 | -8.540 | 622.568 | 622.577 |
| X2 | 17612.80 | -8.540 | 622.509 | 622.530 |
| Y2 | 17622.80 | -8.540 | 622.449 | 622.478 |
| Z2 | 17632.80 | -8.540 | 622.388 | 622.415 |
| A3 | 17642.80 | -8.540 | 622.328 | 622.342 |
| ℄ BRG. S. ABUT. | 17650.13 | -8.540 | 622.283 | 622.283 |
| BK. SOUTH ABUT. | 17652.38 | -8.540 | 622.269 | 622.269 |

## CONSTRUCTION JOINT

| LOCATION | STATION | OFFSET | THEORETICAL GRADE ELEVATIONS | THEORETICAL GRADE ELEVATIONS ADJUSTED FOR DEAD LOAD DEFLECTION |
|---|---|---|---|---|
| ℄ APP. BRG. PIER 4 | 17466.64 | 24.000 | 623.039 | 623.039 |
| L2 | 17476.64 | 24.000 | 622.98 | 623.004 |
| M2 | 17486.64 | 24.000 | 622.93 | 622.960 |
| N2 | 17496.64 | 24.000 | 622.87 | 622.904 |
| O2 | 17506.64 | 24.000 | 622.81 | 622.835 |
| P2 | 17516.64 | 24.000 | 622.76 | 622.768 |
| ℄ PIER 5 | 17523.97 | 24.000 | 622.721 | 622.721 |
| Q2 | 17533.97 | 24.000 | 622.665 | 622.671 |
| R2 | 17543.97 | 24.000 | 622.608 | 622.627 |
| S2 | 17553.97 | 24.000 | 622.550 | 622.578 |
| T2 | 17563.97 | 24.000 | 622.492 | 622.519 |
| U2 | 17573.97 | 24.000 | 622.434 | 622.452 |
| V2 | 17583.97 | 24.000 | 622.376 | 622.381 |
| ℄ PIER 6 | 17592.80 | 24.000 | 622.324 | 622.324 |
| W2 | 17602.80 | 24.000 | 622.265 | 622.273 |
| X2 | 17612.80 | 24.000 | 622.205 | 622.228 |
| Y2 | 17622.80 | 24.000 | 622.145 | 622.176 |
| Z2 | 17632.80 | 24.000 | 622.085 | 622.113 |
| A3 | 17642.80 | 24.000 | 622.024 | 622.039 |
| ℄ BRG. S. ABUT | 17650.13 | 24.000 | 621.980 | 621.980 |
| BK. SOUTH ABUT | 17652.38 | 24.000 | 621.966 | 621.966 |

## P. G. L.

| LOCATION | STATION | OFFSET | THEORETICAL GRADE ELEVATIONS | THEORETICAL GRADE ELEVATIONS ADJUSTED FOR DEAD LOAD DEFLECTION |
|---|---|---|---|---|
| ℄ APP. BRG. PIER 4 | 17466.64 | 0.000 | 623.477 | 623.477 |
| L2 | 17476.64 | 0.000 | 623.422 | 623.440 |
| M2 | 17486.64 | 0.000 | 623.367 | 623.396 |
| N2 | 17496.64 | 0.000 | 623.312 | 623.340 |
| O2 | 17506.64 | 0.000 | 623.256 | 623.274 |
| P2 | 17516.64 | 0.000 | 623.200 | 623.205 |
| ℄ PIER 5 | 17523.97 | 0.000 | 623.159 | 623.159 |
| Q2 | 17533.97 | 0.000 | 623.102 | 623.109 |
| R2 | 17543.97 | 0.000 | 623.045 | 623.063 |
| S2 | 17553.97 | 0.000 | 622.988 | 623.014 |
| T2 | 17563.97 | 0.000 | 622.930 | 622.957 |
| U2 | 17573.97 | 0.000 | 622.872 | 622.889 |
| V2 | 17583.97 | 0.000 | 622.813 | 622.818 |
| ℄ PIER 6 | 17592.80 | 0.000 | 622.761 | 622.761 |
| W2 | 17602.80 | 0.000 | 622.702 | 622.711 |
| X2 | 17612.80 | 0.000 | 622.643 | 622.664 |
| Y2 | 17622.80 | 0.000 | 622.583 | 622.612 |
| Z2 | 17632.80 | 0.000 | 622.522 | 622.549 |
| A3 | 17642.80 | 0.000 | 622.462 | 622.476 |
| ℄ BRG. S. ABUT. | 17650.13 | 0.000 | 622.417 | 622.417 |
| BK. SOUTH ABUT. | 17652.38 | 0.000 | 622.403 | 622.403 |

## STRINGERS No. 8 & 9

| LOCATION | STATION | OFFSET | THEORETICAL GRADE ELEVATIONS | THEORETICAL GRADE ELEVATIONS ADJUSTED FOR DEAD LOAD DEFLECTION |
|---|---|---|---|---|
| ℄ APP. BRG. PIER 4 | 17466.64 | -15.875 | 623.229 | 623.229 |
| L2 | 17476.64 | -15.875 | 623.174 | 623.192 |
| M2 | 17486.64 | -15.875 | 623.119 | 623.148 |
| N2 | 17496.64 | -15.875 | 623.064 | 623.092 |
| O2 | 17506.64 | -15.875 | 623.008 | 623.026 |
| P2 | 17516.64 | -15.875 | 622.952 | 622.957 |
| ℄ PIER 5 | 17523.97 | -15.875 | 622.911 | 622.911 |
| Q2 | 17533.97 | -15.875 | 622.854 | 622.861 |
| R2 | 17543.97 | -15.875 | 622.797 | 622.815 |
| S2 | 17553.97 | -15.875 | 622.740 | 622.756 |
| T2 | 17563.97 | -15.875 | 622.682 | 622.709 |
| U2 | 17573.97 | -15.875 | 622.624 | 622.641 |
| V2 | 17583.97 | -15.875 | 622.565 | 622.570 |
| ℄ PIER 6 | 17592.80 | -15.875 | 622.513 | 622.513 |
| W2 | 17602.80 | -15.875 | 622.454 | 622.463 |
| X2 | 17612.80 | -15.875 | 622.395 | 622.416 |
| Y2 | 17622.80 | -15.875 | 622.335 | 622.364 |
| Z2 | 17632.80 | -15.875 | 622.274 | 622.301 |
| A3 | 17642.80 | -15.875 | 622.214 | 622.228 |
| ℄ BRG. S. ABUT. | 17650.13 | -15.875 | 622.169 | 622.169 |
| BK. SOUTH ABUT. | 17652.38 | -15.875 | 622.155 | 622.155 |

## STRINGERS No. 3 & 14

| LOCATION | STATION | OFFSET | THEORETICAL GRADE ELEVATIONS | THEORETICAL GRADE ELEVATIONS ADJUSTED FOR DEAD LOAD DEFLECTION |
|---|---|---|---|---|
| ℄ APP. BRG. PIER 4 | 17466.64 | 20.792 | 623.106 | 623.106 |
| L2 | 17476.64 | 20.792 | 623.051 | 623.069 |
| M2 | 17486.64 | 20.792 | 622.996 | 623.025 |
| N2 | 17496.64 | 20.792 | 622.941 | 622.969 |
| O2 | 17506.64 | 20.792 | 622.885 | 622.903 |
| P2 | 17516.64 | 20.792 | 622.829 | 622.834 |
| ℄ PIER 5 | 17523.97 | 20.792 | 622.788 | 622.788 |
| Q2 | 17533.97 | 20.792 | 622.731 | 622.738 |
| R2 | 17543.97 | 20.792 | 622.674 | 622.692 |
| S2 | 17553.97 | 20.792 | 622.617 | 622.643 |
| T2 | 17563.97 | 20.792 | 622.559 | 622.586 |
| U2 | 17573.97 | 20.792 | 622.501 | 622.518 |
| V2 | 17583.97 | 20.792 | 622.442 | 622.447 |
| ℄ PIER 6 | 17592.80 | 20.792 | 622.390 | 622.390 |
| W2 | 17602.80 | 20.792 | 622.331 | 622.340 |
| X2 | 17612.80 | 20.792 | 622.272 | 622.292 |
| Y2 | 17622.80 | 20.792 | 622.212 | 622.241 |
| Z2 | 17632.80 | 20.792 | 622.151 | 622.178 |
| A3 | 17642.80 | 20.792 | 622.091 | 622.105 |
| ℄ BRG. S. ABUT. | 17650.13 | 20.792 | 622.046 | 622.046 |
| BK. SOUTH ABUT. | 17652.38 | 20.792 | 622.032 | 622.032 |

## STRINGERS No. 6 & 11

| LOCATION | STATION | OFFSET | THEORETICAL GRADE ELEVATIONS | THEORETICAL GRADE ELEVATIONS ADJUSTED FOR DEAD LOAD DEFLECTION |
|---|---|---|---|---|
| ℄ APP. BRG. PIER 4 | 17466.64 | -1.208 | 623.458 | 623.458 |
| L2 | 17476.64 | -1.208 | 623.403 | 623.421 |
| M2 | 17486.64 | -1.208 | 623.348 | 623.277 |
| N2 | 17496.64 | -1.208 | 623.293 | 623.321 |
| O2 | 17506.64 | -1.208 | 623.237 | 623.255 |
| P2 | 17516.64 | -1.208 | 623.181 | 623.186 |
| ℄ PIER 5 | 17523.97 | -1.208 | 623.140 | 623.140 |
| Q2 | 17533.97 | -1.208 | 623.082 | 623.090 |
| R2 | 17543.97 | -1.208 | 623.026 | 623.044 |
| S2 | 17553.97 | -1.208 | 622.969 | 622.995 |
| T2 | 17563.97 | -1.208 | 622.911 | 622.938 |
| U2 | 17573.97 | -1.208 | 622.853 | 622.869 |
| V2 | 17583.97 | -1.208 | 622.794 | 622.799 |
| ℄ PIER 6 | 17592.80 | -1.208 | 622.742 | 622.742 |
| W2 | 17602.80 | -1.208 | 622.682 | 622.691 |
| X2 | 17612.80 | -1.208 | 622.624 | 622.645 |
| Y2 | 17622.80 | -1.208 | 622.564 | 622.592 |
| Z2 | 17632.80 | -1.208 | 622.503 | 622.530 |
| A3 | 17642.80 | -1.208 | 622.443 | 622.457 |
| ℄ BRG. S. ABUT. | 17650.13 | -1.208 | 622.398 | 622.398 |
| BK. SOUTH ABUT. | 17652.38 | -1.208 | 622.384 | 622.384 |

NOTE :

*Offsets for Stringers 1&16, 2&15, Construction Joint, Stringers 3&14, 4&13 and 5&12 Are taken from the P.G.L. toward the outsides of the Bridge.*
*Offsets for Stringers 6&11, 7&10 and 8&9 Are taken from P.G.L. toward the ℄ I-94.*

STATE OF ILLINOIS
DEPARTMENT OF TRANSPORTATION
TOP OF SLAB ELEVATIONS - VI
F.A.I-94 OVER LITTLE CALUMET RIVER
COOK COUNTY

STA. 172 + 54.39 SN 016-0158 (S. BOUND)
SN 016-0159 (N. BOUND)

SCALE DRAWN BY
DATE NOV 199 CHECKED BY

* 42(VB-10,12,HB-14,B-11) & 0707.1 HB(R-3)90

| F.A. ROUTE | SECTION | COUNTY | TOTAL SHEETS | SHEET NO. |
|---|---|---|---|---|
| I-94 | R | COOK | 318 | 182 |
| STA. | | TO STA. | | |
| FED. ROAD DIST. NO. 7 | ILLINOIS | FEDERAL AID PROJECT | | |

SHT. S11 OF S54

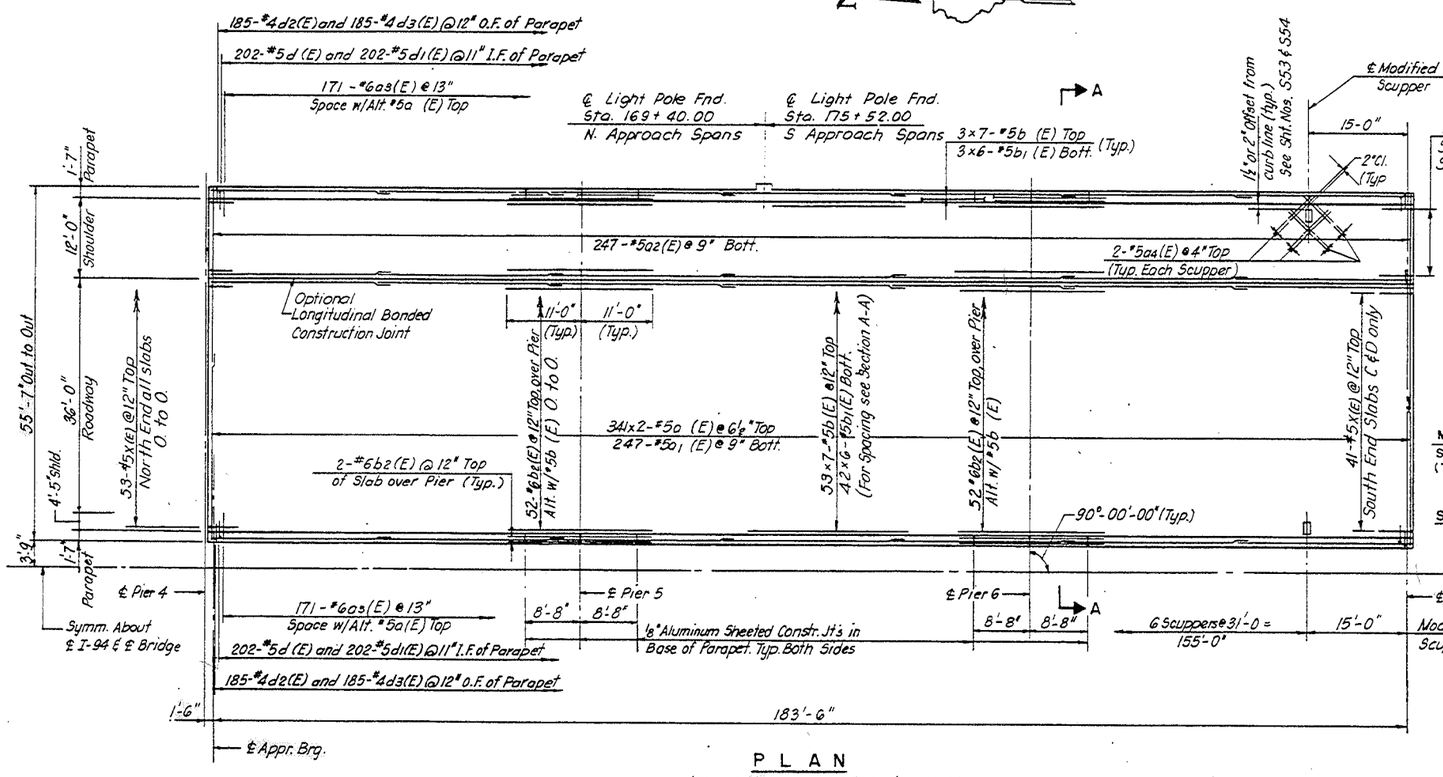


PLAN

(Slab C Shown, Slab A, B & D Similar U.N.)
See Key Plan

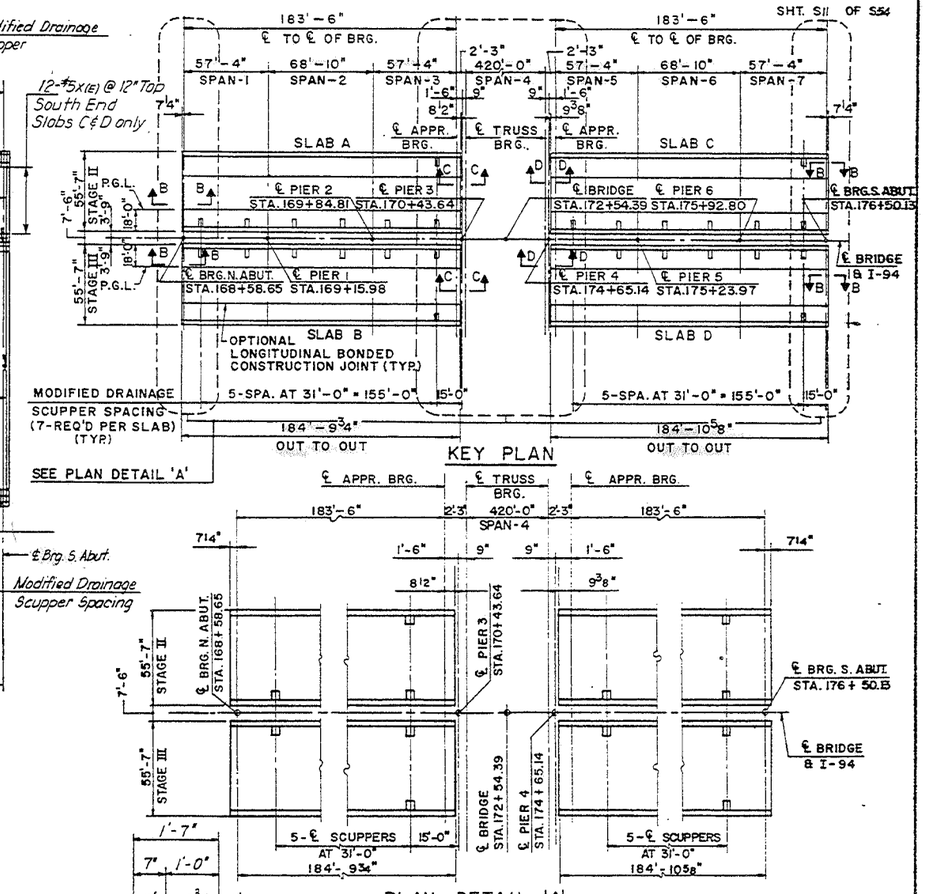


KEY PLAN




PLAN DETAIL 'A'

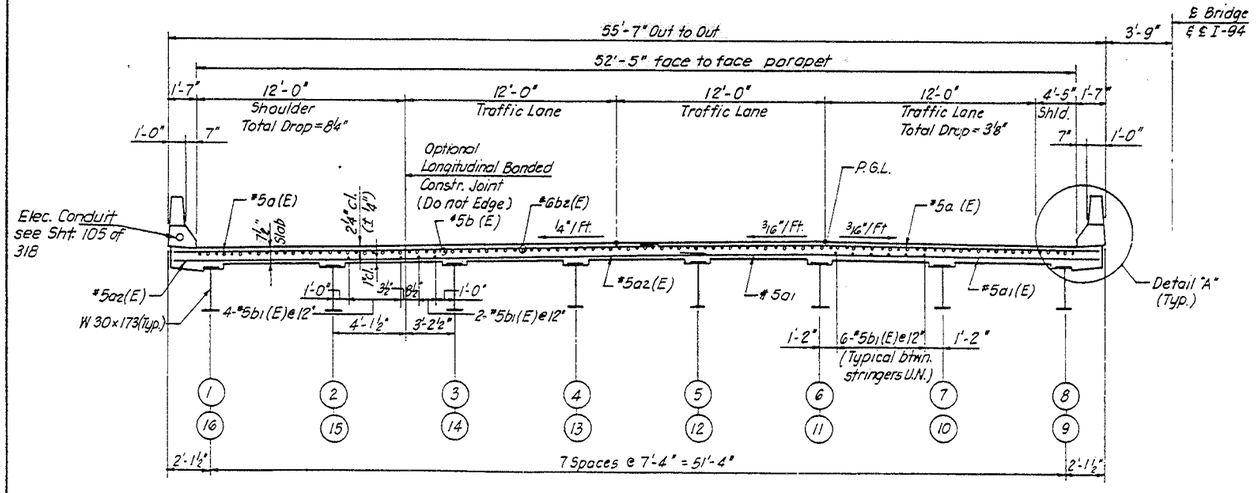


SECTION A-A
S.B. Looking North
N.B. Looking South

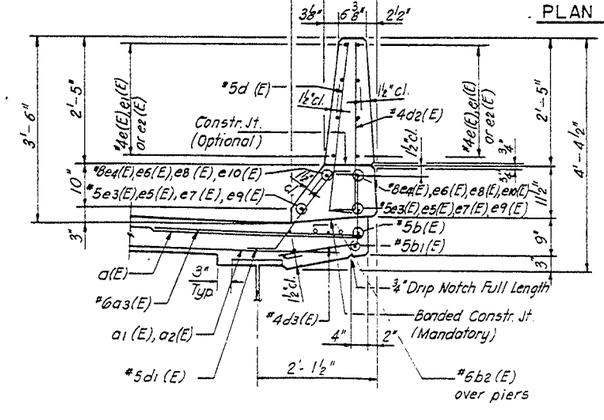


DETAIL A

Notes:

Reinforcement Bars designated (E) shall be Epoxy Coated.

Bars indicated thus 20x3-#5 etc. indicates 20 lines of Bars with 3 lengths per line.

For Sections B-B, C-C & D-D See Sht. No. S12

For modified Drainage Scupper Det. see Sht. No. S-53 and S-54.

For Parapet Details and Bill of Materials see Sht. No. S-12.

Minimum Lap for #5 Bars = 2'-2"

STATE OF ILLINOIS
DEPARTMENT OF TRANSPORTATION
DECK DETAILS I
F.A.I.-94 OVER LITTLE CALUMET RIVER
COOK COUNTY

STA. 172+54.39 — SN 016-0158 (S. BOUND) / SN 016-0159 (N. BOUND)

SCALE — DRAWN BY S.P.

DATE NOV. 1991 — CHECKED BY J.M.

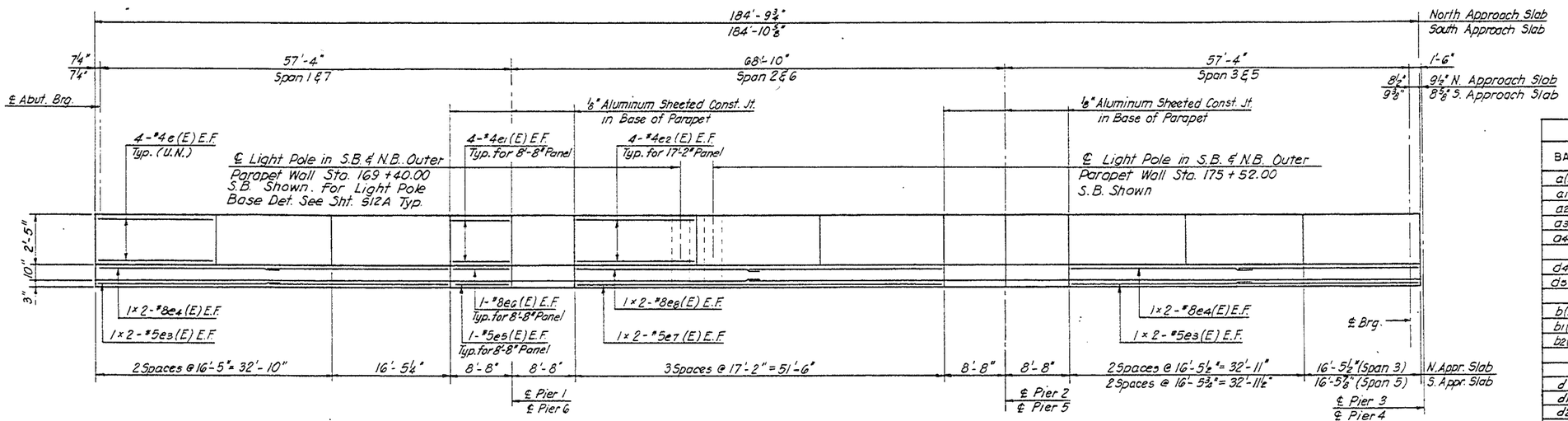


INSIDE FACE OF PARAPET WALL ELEVATION

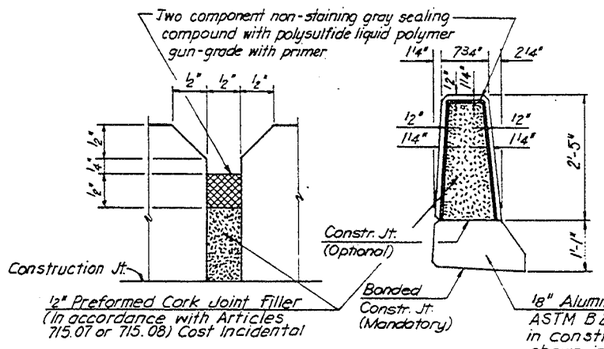


PARAPET JOINTS DETAIL

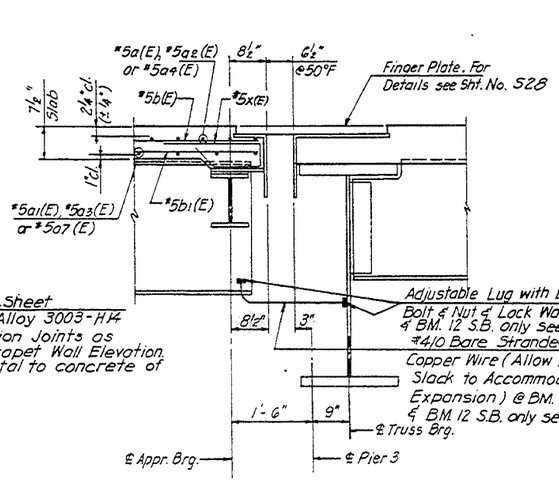


SECTION C-C

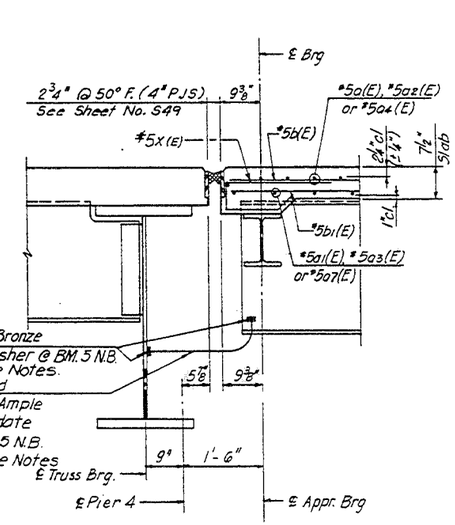


SECTION D-D

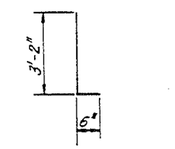


BAR d (E) & d2(E)

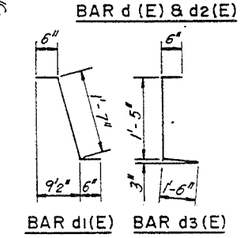


BAR d1(E) BAR d3(E)

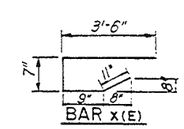


BAR x(E)

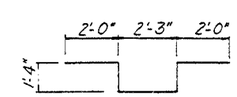


BAR d4 (E)

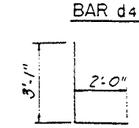


BAR d5 (E)

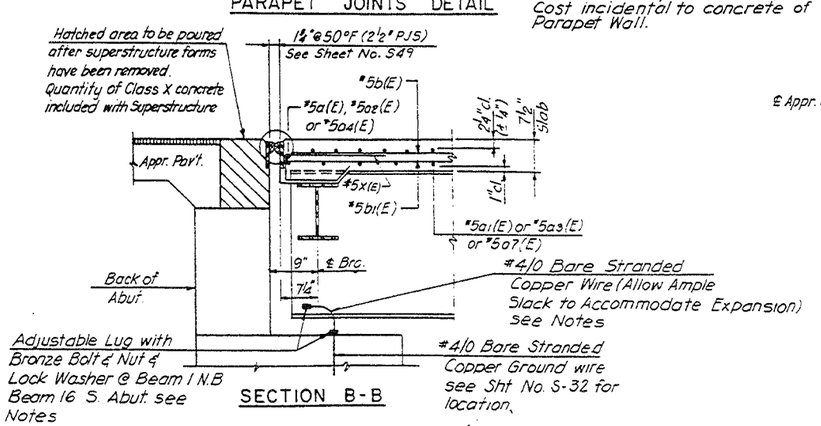


SECTION B-B

## BILL OF MATERIAL

| BAR | TOTAL NO. | CONSTR. STAGES II | CONSTR. STAGES III | SIZE | LENGTH | SHAPE |
|---|---|---|---|---|---|---|
| a(E) | 2728 | 1364 | 1364 | #5 | 28'-6" | — |
| a1(E) | 988 | 494 | 494 | #5 | 32'-3" | — |
| a2(E) | 988 | 494 | 494 | #5 | 24'-9" | — |
| a3(E) | 1368 | 684 | 684 | #6 | 4'-0" | — |
| a4(E) | 224 | 112 | 112 | #5 | 4'-0" | — |
| | | | | | | |
| d4(E) | 24 | 12 | 12 | #6 | 8'-11" | ⊐⊏ |
| d5(E) | 12 | 6 | 6 | #6 | 5'-1" | ⊥ |
| | | | | | | |
| b(E) | 1652 | 826 | 826 | #5 | 28'-3" | — |
| b1(E) | 1152 | 576 | 576 | #5 | 32'-8" | — |
| b2(E) | 448 | 224 | 224 | #6 | 22'-0" | — |
| | | | | | | |
| d (E) | 1616 | 808 | 808 | #5 | 3'-8" | ⊥ |
| d1 (E) | 1616 | 808 | 808 | #5 | 2'-7" | ⊥ |
| d2(E) | 1480 | 740 | 740 | #4 | 3'-8" | ⊥ |
| d3(E) | 1480 | 740 | 740 | #4 | 3'-5" | ⊏ |
| | | | | | | |
| X(E) | 318 | 159 | 159 | #5 | 5'-9" | ⊔ |
| e (E) | 384 | 192 | 192 | #4 | 16'-1" | — |
| e1(E) | 256 | 128 | 128 | #4 | 8'-3" | — |
| e2(E) | 192 | 96 | 96 | #4 | 16'-11" | — |
| e3(E) | 64 | 32 | 32 | #4 | 25'-7" | — |
| e4(E) | 64 | 32 | 32 | #8 | 26'-9" | — |
| e5(E) | 64 | 32 | 32 | #5 | 8'-4" | — |
| e6(E) | 64 | 32 | 32 | #8 | 8'-4" | — |
| e7(E) | 32 | 16 | 16 | #5 | 26'-10" | — |
| e8(E) | 32 | 16 | 16 | #8 | 27'-9" | — |

| ITEM | UNIT | TOTAL | CONSTR. STAGE II * | CONSTR. STAGE III * |
|---|---|---|---|---|
| Reinf. Bars (Epoxy Coated) | Lbs. | 290,200 | 145,100 | 145,100 |
| Class X Concrete Superstruc. | C.Y. | 1,205.4 | 602.7 | 602.7 |
| Drainage Scupper Special | Each | 28 | 14 | 14 |
| ** Protective Coat | S.Y. | 5,046 | 2,523 | 2,523 |

* Quantities are for both North & South Approach Spans.

** Includes Deck Slab Area and End Posts.

NOTES:

Reinforcement bars designated (E) shall be Epoxy Coated.

Bars indicated thus 1×2-#5 etc. indicates 1 line of bars with 2 lengths per line.

Min. Splice Lengths #5 Bar: 2'-2", #8 Bar 4'-3"

For Light Pole & Parapet Base Details, see Sht. 512A.

Bonding of Beam 5 N.B. and Beam 12 S.B. to end floor Beams @ Pier 3 & 4. See Spec. Provision for Truss Bridge Grounding System.

STATE OF ILLINOIS
DEPARTMENT OF TRANSPORTATION
DECK DETAILS II
F.A.I-94 OVER LITTLE CALUMET RIVER
COOK COUNTY

STA. 172+54.39 — SN 016-0158 (S. BOUND) SN 016-0159 (N. BOUND)

SCALE — DRAWN BY S.P.

DATE NOV. 1991 — CHECKED BY J.M.

| F.A. ROUTE | SECTION | COUNTY | TOTAL SHEETS | SHEET NO. |
|---|---|---|---|---|
| I-94 | | COOK | 318 | 184 |
| STA. | | TO STA. | | |
| FED. ROAD DIST. NO. 7 | ILLINOIS | FEDERAL AID PROJECT | | |

* 42(VB-10,12,HB-14,B-11) & 0707.1 HB(R-3)90

SHT. S12AOF S54

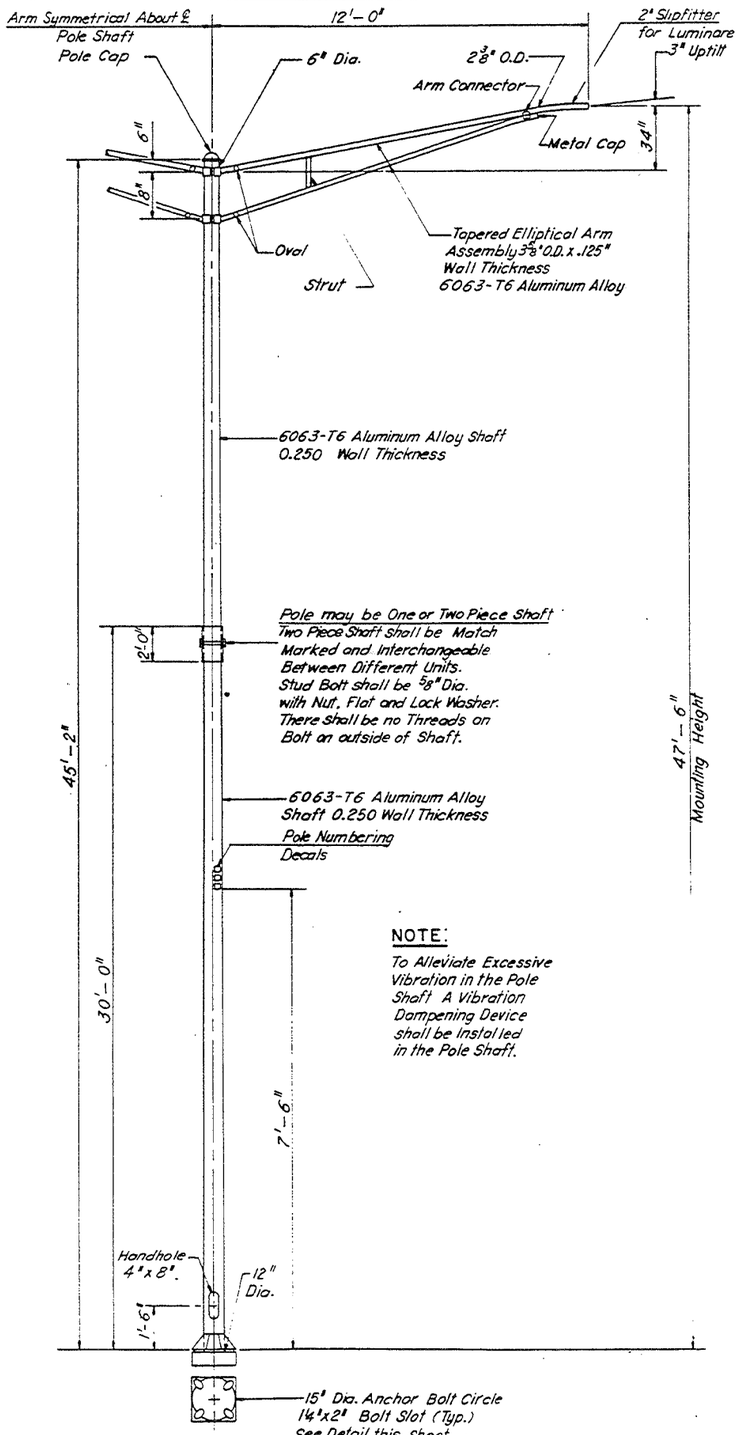


NOTE:
To Alleviate Excessive Vibration in the Pole Shaft A Vibration Dampening Device shall be Installed in the Pole Shaft.

POLE SHAFT AND MAST ARM (APPROACH SPANS ONLY, FOR TRUSS SPAN SEE SH. 110)

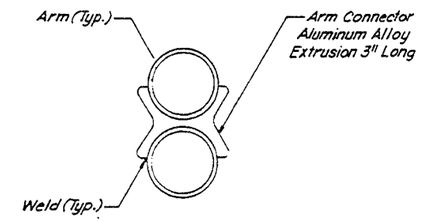


ARM CONNECTOR

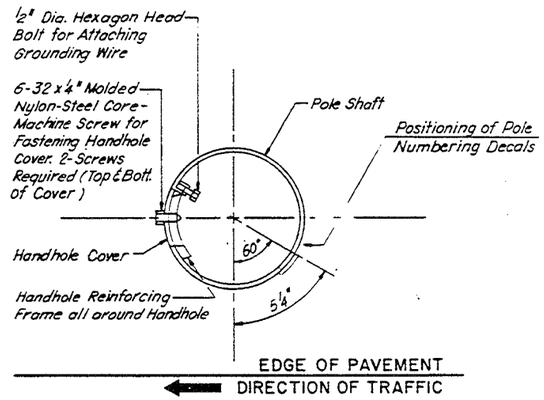


HANDHOLE DETAILS

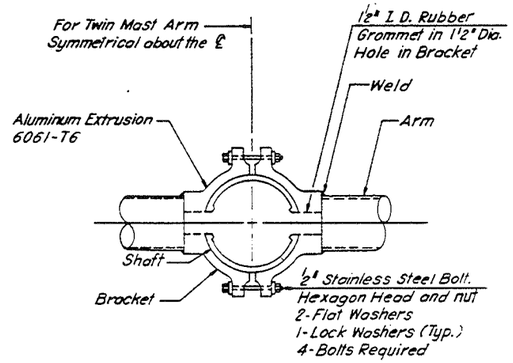


CLAMP TYPE MAST ARM BRACKET

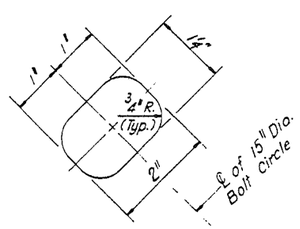


BOLT SLOT DETAIL

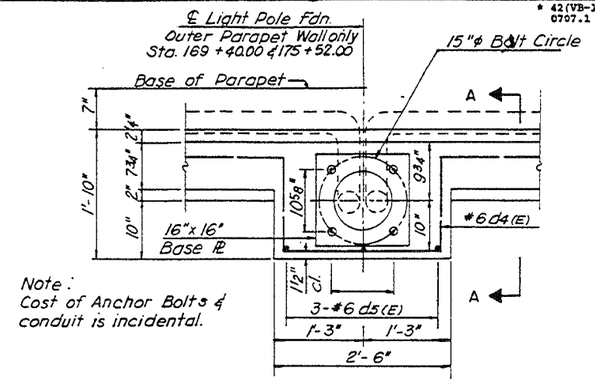


Note: Cost of Anchor Bolts & conduit is incidental.

PLAN

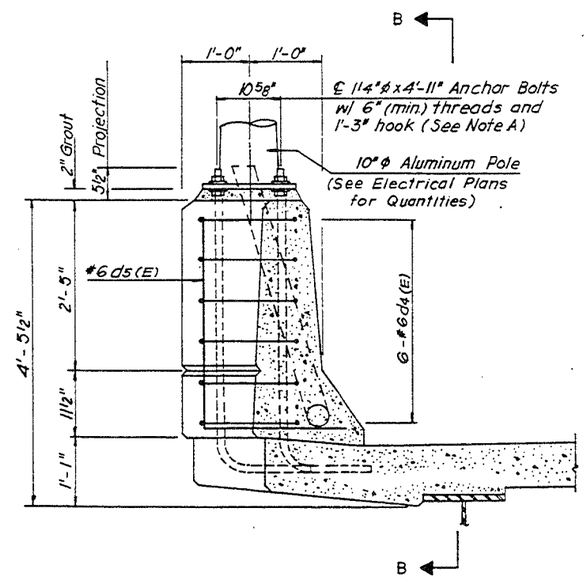


SECTION A-A

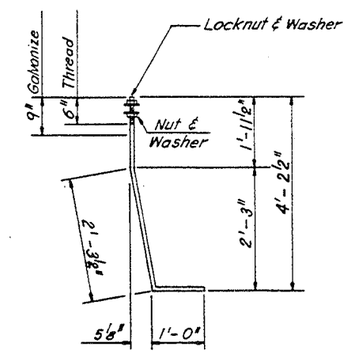


1 1/4" Ø ANCHOR BOLT
(Cost Incidental to Class X Concrete Superstructure)

Note A:
Provide 2-flat washers, 1-regular nut and 1 locknut for each bolt. All nuts and washers must be galvanized.

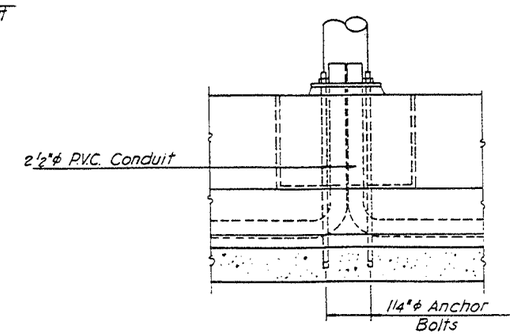


SECTION B-B

See Sh. 105 of 318 for Locations of Electrical Conduits in Parapets and Conduit Details. Cost of Conduit and Expansion / Deflection Couplings is Incidental to Cost of Class X Concrete Superstructure

STATE OF ILLINOIS
DEPARTMENT OF TRANSPORTATION
LIGHT POLE & PARAPET BASE DETAILS
F.A.I-94 OVER LITTLE CALUMET RIVER
COOK COUNTY

STA. 172 + 54.39
SN 016-0158 (S. BOUND)
SN 016-0159 (N. BOUND)

SCALE
DRAWN BY L.M.G.
DATE NOV. 1991
CHECKED BY L.M.

Paint System - G. - 09/93
Shop applied Zinc Silicate & Field Applied Vinyl paint system.

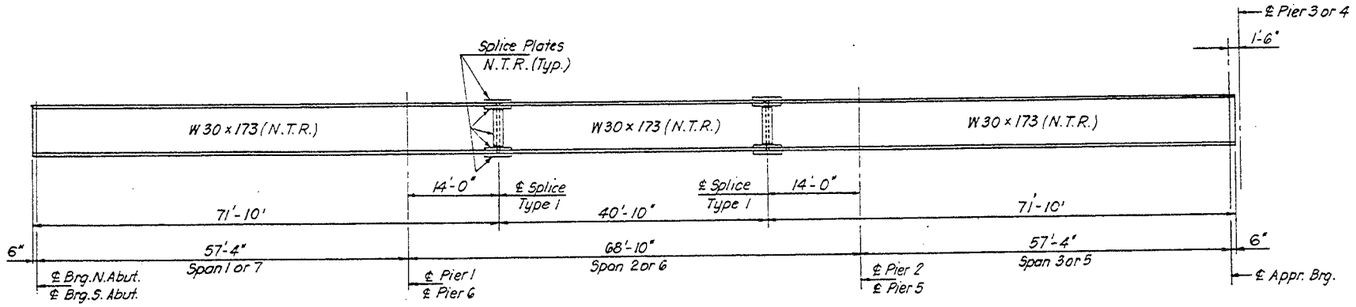


## BEAM ELEVATION

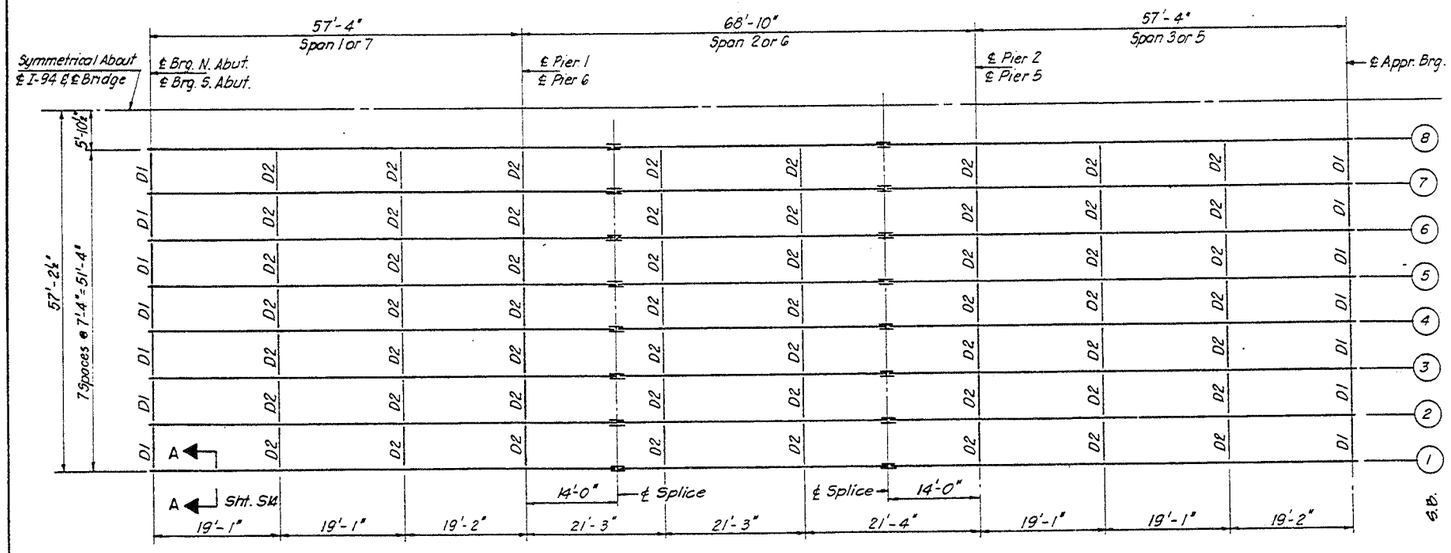


## FRAMING PLAN

S.B. Shown

| INTERIOR BEAM REACTION TABLE | | |
|---|---|---|
| | ABUTMENT, PIER 3 & 4 | PIER 1,2,5 & 6 |
| RΦ (K) | 28.2 | 91.0 |
| R℄ (K) | 43.6 | 54.0 |
| IMP (K) | 11.8 | 14.6 |
| RTOT (K) | 83.6 | 159.6 |

### Notes:

Is and Ss are the moment of Inertia and Section. Modulus of the steel section used in computing fs Total.

VR is the maximum ℄ + Impact. Shear range in Span.

For Splice Type 1 and Diaphragm Details See Sht. No. S14.

For Bearing Details See Sht. No. S15 & S16

N.T.R. Indicates the Notch Toughness Requirements for Zone-2

| INTERIOR BEAM MOMENT TABLE | | | |
|---|---|---|---|
| | 0.4 SPAN 1,3,5 & 7 | PIER 1,2,5 & 6 | 0.5 SPAN 2 & 6 |
| Is (in⁴) | 8,200 | 8,200 | 8,200 |
| Ss (in³) | 539 | 539 | 539 |
| ℄ (K/I) | 1.25 | 1.25 | 1.25 |
| MΦ ('K) | 304.4 | 499.5 | 249.1 |
| M℄ ('K) | 407.3 | 329.2 | 397.5 |
| MIMP ('K) | 110 | 88.9 | 103.3 |
| MTOT. ('K) | 821.7 | 917.6 | 749.9 |
| fs (K.S.I.) | 18.29 | 20.42 | 16.69 |

* For Fabrication Only.

| TOP OF BEAM ELEVATIONS* | | | | | | | | | | | | | | | | |
|---|---|---|---|---|---|---|---|---|---|---|---|---|---|---|---|---|
| LOCATION | BEAM | | | | | | | | | | | | | | | |
| | 1 | 2 | 3 | 4 | 5 | 6 | 7 | 8 | 9 | 10 | 11 | 12 | 13 | 14 | 15 | 16 |
| ℄ Brg. N. Abut | 624.759 | 624.912 | 625.064 | 625.271 | 625.339 | 625.416 | 625.301 | 625.187 | 625.187 | 625.301 | 625.416 | 625.339 | 625.217 | 625.064 | 624.912 | 624.759 |
| ℄ Pier 1 | 624.526 | 624.679 | 624.831 | 624.984 | 625.106 | 625.183 | 625.068 | 624.954 | 624.954 | 625.068 | 625.183 | 625.106 | 624.984 | 624.831 | 624.679 | 624.526 |
| ℄ Splice 1 | 624.469 | 624.622 | 624.774 | 624.927 | 625.049 | 625.126 | 625.011 | 624.897 | 624.897 | 625.011 | 625.126 | 625.049 | 624.927 | 624.774 | 624.622 | 624.469 |
| ℄ Splice 2 | 624.325 | 624.478 | 624.630 | 624.783 | 624.905 | 624.982 | 624.867 | 624.753 | 624.753 | 624.867 | 624.982 | 624.905 | 624.783 | 624.630 | 624.478 | 624.352 |
| ℄ Pier 2 | 624.283 | 624.436 | 624.588 | 624.741 | 624.863 | 624.940 | 624.825 | 624.711 | 624.711 | 624.825 | 624.940 | 624.863 | 624.741 | 624.588 | 624.436 | 624.283 |
| ℄ N. Approach Brg. | 624.110 | 624.263 | 624.415 | 624.568 | 624.690 | 624.767 | 624.652 | 624.538 | 624.538 | 624.652 | 624.767 | 624.690 | 624.568 | 624.415 | 624.263 | 624.110 |
| ℄ S. Approach Brg. | 622.134 | 622.287 | 622.439 | 622.592 | 622.714 | 622.791 | 622.676 | 622.562 | 622.562 | 622.676 | 622.791 | 622.714 | 622.592 | 622.439 | 622.287 | 622.134 |
| ℄ Pier 5 | 621.773 | 621.926 | 622.078 | 622.231 | 622.353 | 622.430 | 622.315 | 622.201 | 622.201 | 622.315 | 622.430 | 622.353 | 622.231 | 622.078 | 621.926 | 621.773 |
| ℄ Splice 3 | 621.685 | 621.838 | 621.990 | 622.143 | 622.265 | 622.342 | 622.227 | 622.113 | 622.113 | 622.227 | 622.342 | 622.265 | 622.143 | 621.990 | 621.838 | 621.685 |
| ℄ Splice 4 | 621.449 | 621.602 | 621.754 | 621.907 | 622.029 | 622.106 | 621.991 | 621.877 | 621.877 | 621.991 | 622.106 | 622.029 | 621.907 | 621.754 | 621.602 | 621.449 |
| ℄ Pier 6 | 621.375 | 621.528 | 621.680 | 621.833 | 621.955 | 622.032 | 621.917 | 621.803 | 621.803 | 621.917 | 622.032 | 621.955 | 621.833 | 621.680 | 621.528 | 621.375 |
| ℄ Brg. S. Abut. | 621.074 | 621.227 | 621.379 | 621.532 | 621.654 | 621.731 | 621.616 | 621.502 | 621.502 | 621.616 | 621.731 | 621.654 | 621.532 | 621.379 | 621.227 | 261.074 |

STATE OF ILLINOIS
DEPARTMENT OF TRANSPORTATION
STEEL DETAILS I
F.A.I.-94 OVER LITTLE CALUMET RIVER
COOK COUNTY

STA. 172 + 54.39 — SN 016-0158 (S. BOUND) SN 016-0159 (N. BOUND)

SCALE — DRAWN BY S.P.

DATE NOV. 1991 — CHECKED BY J.M.

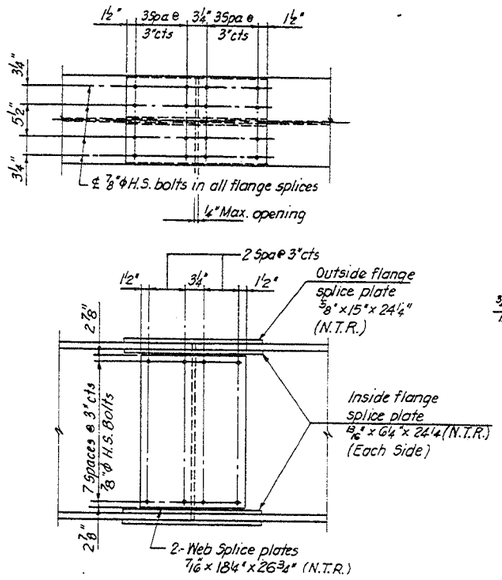


SPLICE TYPE I

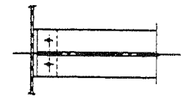

SECTION C - C

Note:
Two Hardened washers shall be required over all 15/16"φ Holes in Diaphragm Connection

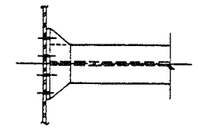

SECTION F - F

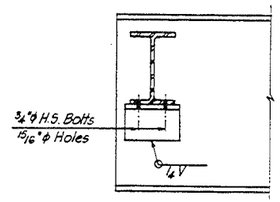


SECTION B - B

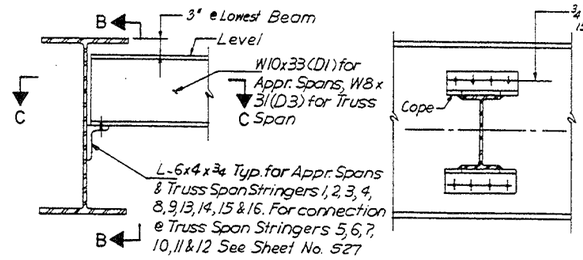


SECTION A - A

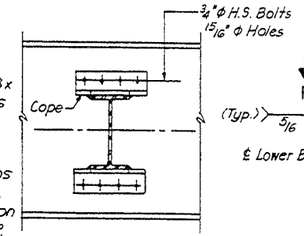


SECTION E - E

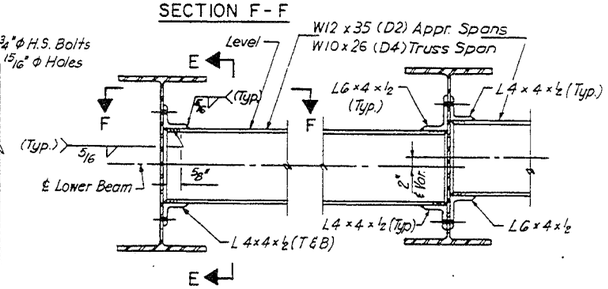


SECTION D - D

## END DIAPHRAGM

D1 (W10 x 33) APPROACH SPANS
D3 (W8 x 31) TRUSS SPAN
NO. REQUIRED D1 = 56, D3 = 42

Total for NB & SB structures!
(÷2)

## INTERIOR DIAPHRAGM

D2 (W12 x 35) APPROACH SPANS
D4 (W10 x 26) TRUSS SPAN
NO. REQUIRED D2 = 224, D4 = 168

NOTES:

N.T.R. Indicates Supplemental Requirements for Notch Toughness Zone 2.
Work this Drawing with Sheet Nos. S13 & S19

STATE OF ILLINOIS
DEPARTMENT OF TRANSPORTATION
STEEL DETAILS II
F.A.I.-94 OVER LITTLE CALUMET RIVER
COOK COUNTY

STA. 172 + 54.39 — SN 016-0158 (S. BOUND) SN 016-0159 (N. BOUND)

SCALE — DRAWN BY S.P.

DATE NOV. 1991 — CHECKED BY J.M.

176

| F.A. ROUTE | SECTION | COUNTY | TOTAL SHEETS | SHEET NO. |
|---|---|---|---|---|
| I-94 | * | COOK | 318 | 187 |

STA. TO STA.

FED. ROAD DIST. NO. 7 | ILLINOIS | FEDERAL AID PROJECT

*42(VB-10,12;HB-14;B-11) & 0707.1 HB(R-3)90

SHT. S15 OF S54

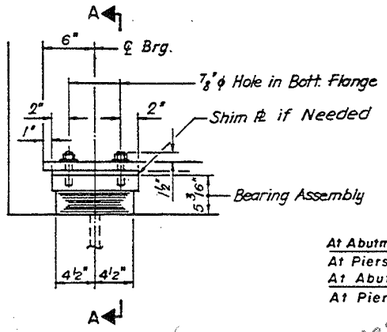


ELEVATION AT ABUT.
32 REQUIRED — both Trusses ok.
16 – 1 Truss

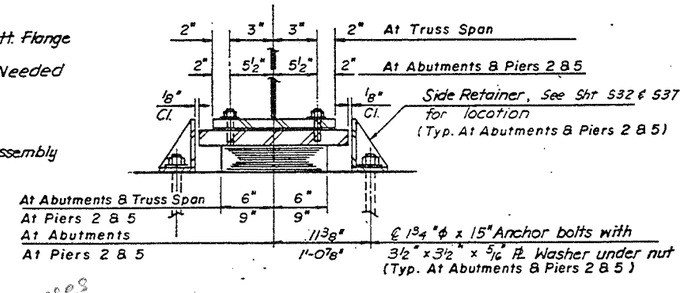


SECTION A-A

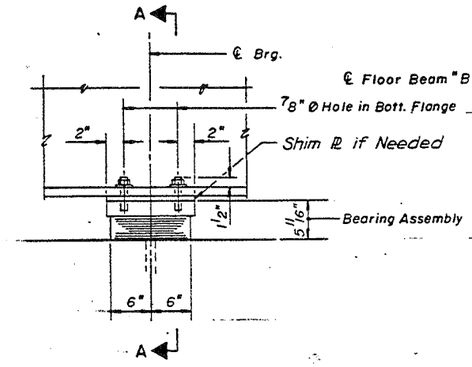


ELEVATION AT PIER 2 & 5
32 REQUIRED
16 – 1 Truss ok

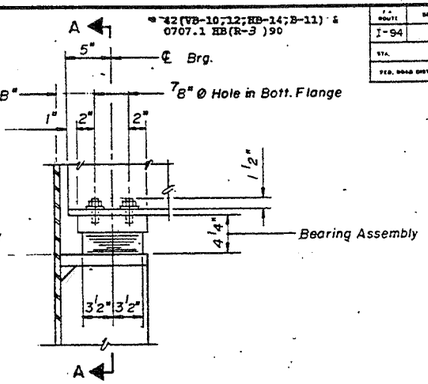


TRUSS SPAN – STRINGER BEARING
48 REQUIRED
24 – 1 Truss

? I count 32/truss = 64 total!?

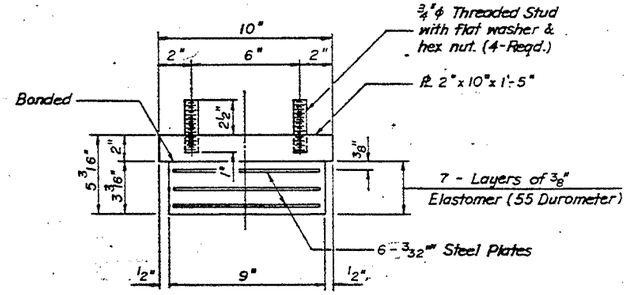


BEARING ASSEMBLY
AT ABUTMENTS

*Note: Shim plates shall not be placed under Bearing Assembly.*

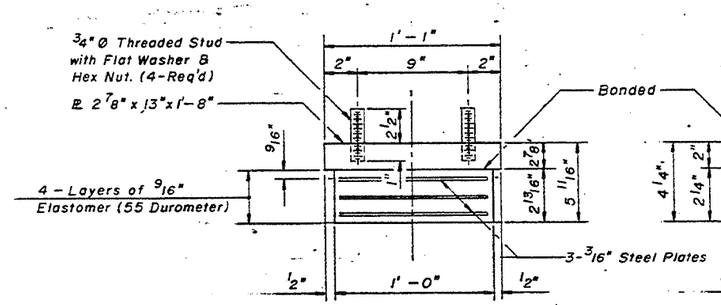


BEARING ASSEMBLY
AT PIER 2 & 5

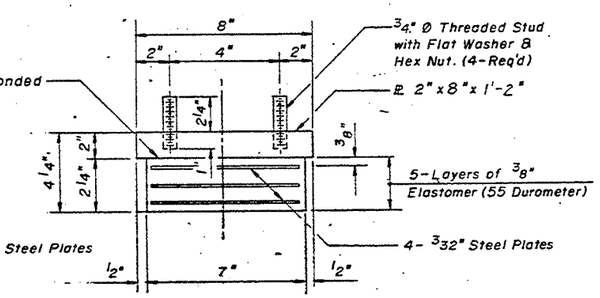


BEARING ASSEMBLY
AT TRUSS SPAN

Piers 3 & 4? 16/ Truss
32 total

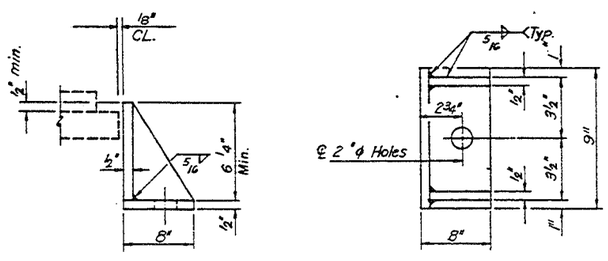


SIDE RETAINER
AT ABUTMENTS & PIERS 2 & 5

*Equivalent rolled angle with stiffeners will be allowed in lieu of welded plates.*

NOTE *All Bearings on this Sheet are Elastomeric, Type I.*

BILL OF MATERIAL

| ITEM | UNIT | TOTAL |
|---|---|---|
| Elastomeric Bearing Assembly Type I | Each | 112 |

STATE OF ILLINOIS
DEPARTMENT OF TRANSPORTATION
STEEL DETAILS III
FAI-94 OVER LITTLE CALUMET RIVER
COOK COUNTY

STA. 172+54.39 — SN 016-0158 (S. BOUND) SN 016-0159 (N. BOUND)

SCALE — DRAWN BY S.P.

DATE NOV. 1991 — CHECKED BY J.M.

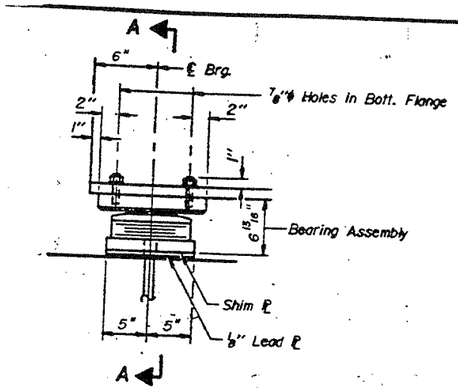


ELEVATION AT PIER NOS. 3 & 4 *

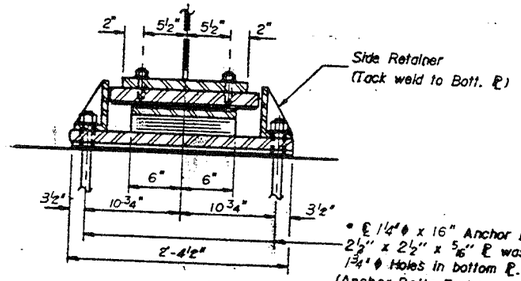


SECTION A-A

TYPE II TFE ELASTOMERIC EXP. BRG.

* Notes: Anchor bolts at fixed bearings may be built into the masonry.
See sht. #S52 for Anchor Bolt installation.

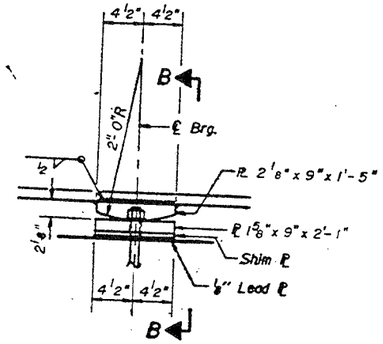


ELEVATION AT PIER NOS 1 & 6

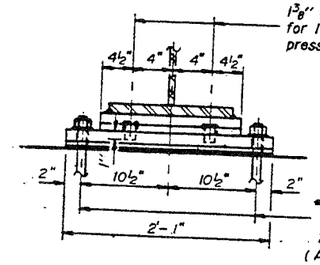


SECTION B-B

FIXED BEARING
32 REQUIRED

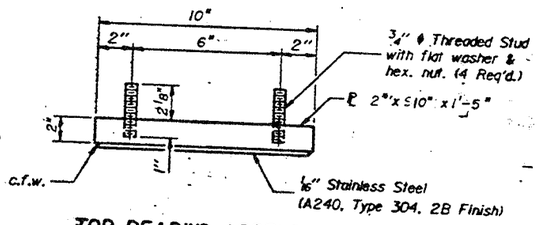


TOP BEARING ASSEMBLY

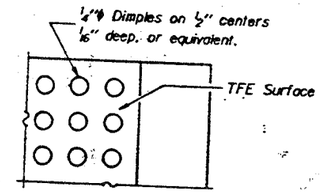


PLAN-TFE SURFACE

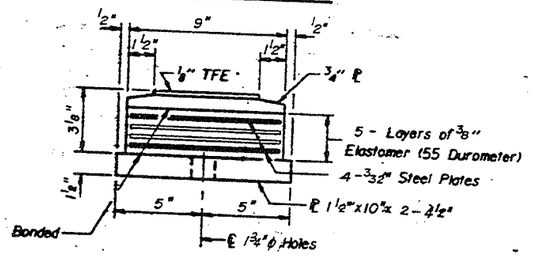


BOTTOM BEARING ASSEMBLY

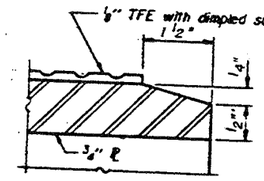


SECTION THRU TFE

Note: The 1/8" TFE sheet shall be bonded directly to the top steel plate with a two-component, medium viscosity epoxy resin, conforming to the requirements of the Federal Specification, MMM-A-134, Type I. The bond agent shall be applied on the full area of the contact surfaces.

Bonding of 1/8" TFE sheet during vulcanizing process will be permitted provided the process and method of adjusting assembly height is approved by the Engineer.

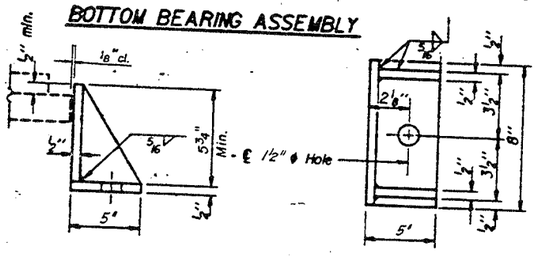


SIDE RETAINER

Equivalent rolled angle with stiffeners will be allowed in lieu of welded plates

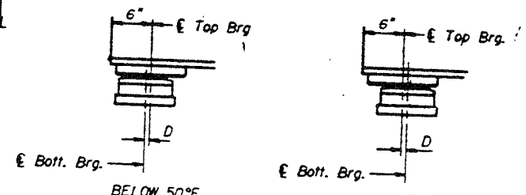


BELOW 50°F.
(Move bott. brg. away from fixed brg.)

ABOVE 50°F.
(Move bott. brg. toward fixed brg.)

SETTING ANCHOR BOLTS AT EXP. BRG.

D = 1/8" per each 100' of expansion for every 15° temp. change from the normal temp. of 50°F.

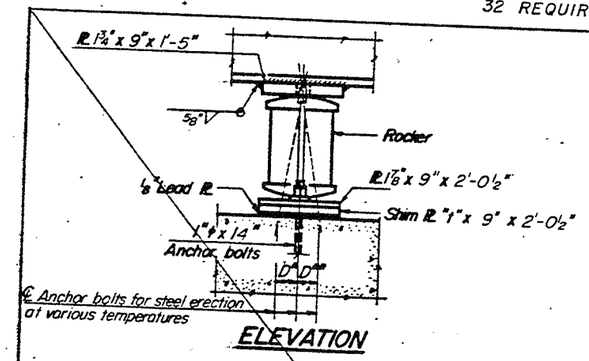


ELEVATION

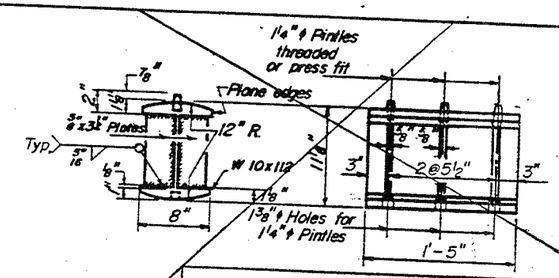


ROCKER

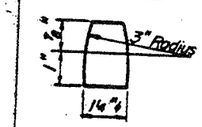


PINTLE

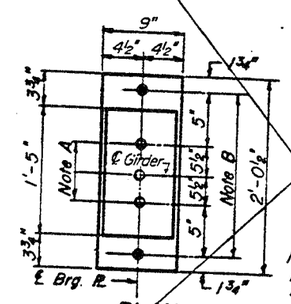


PLAN
AT PIER NO'S 2 & 5

NOTE A
1 3/8"ϕ Holes - 1" deep in top ℙ for pintles. Thread or press fit pintles into bottom ℙ.

NOTE B
1 1/2"ϕ Holes, for 1 1/4" ϕ anchor bolts. 5/16" x 2 1/2" x 2 1/2" ℙ. Washers under nut.

BILL OF MATERIAL

| Item | Unit | Total |
|---|---|---|
| Elastomeric Bearing Assembly Type II | Each | 32 |

NOTES ON SETTING OF ANCHOR BOLTS AT EXP. BRGS. AT PIERS 2 & 5

a) D* (Side of brg. away from fixed brg.)
D* = 1/8" per each 100' of expansion for every 15° fall below the normal temp. of 50°F.
D** (Side of brg. toward fixed brg.)
D** = 1/8" per each 100' of expansion for every 15° rise above the normal temp. of 50°F.

b) After girders have been erected and dimensions D* or D** determined, holes shall be drilled and anchor bolts shall be installed as shown on Sheet No. S52.
All fixed anchor bolts may be built into the masonry.

STATE OF ILLINOIS
DEPARTMENT OF TRANSPORTATION
STEEL DETAILS IV
F.A.I.-94 OVER LITTLE CALUMET RIVER
COOK COUNTY
STA 172+54.39
SN 016-0158 (S. BOUND)
SN 016-0159 (N. BOUND)
SCALE
DRAWN BY S.P.
DATE NOV. 1991
CHECKED BY J.M

| F.A. ROUTE | SECTION | COUNTY | TOTAL SHEETS | SHEET NO. |
|---|---|---|---|---|
| I-94 | * | COOK | 318 | 169 |
| STA. | TO STA. | | | |
| FED. ROAD DIST. NO. 7 | ILLINOIS | FEDERAL AID PROJECT | | |

* 42(VB-10,12,HB-14,B-11) & 0707.1 HB(R-3)90

SHT. S17 OF S54

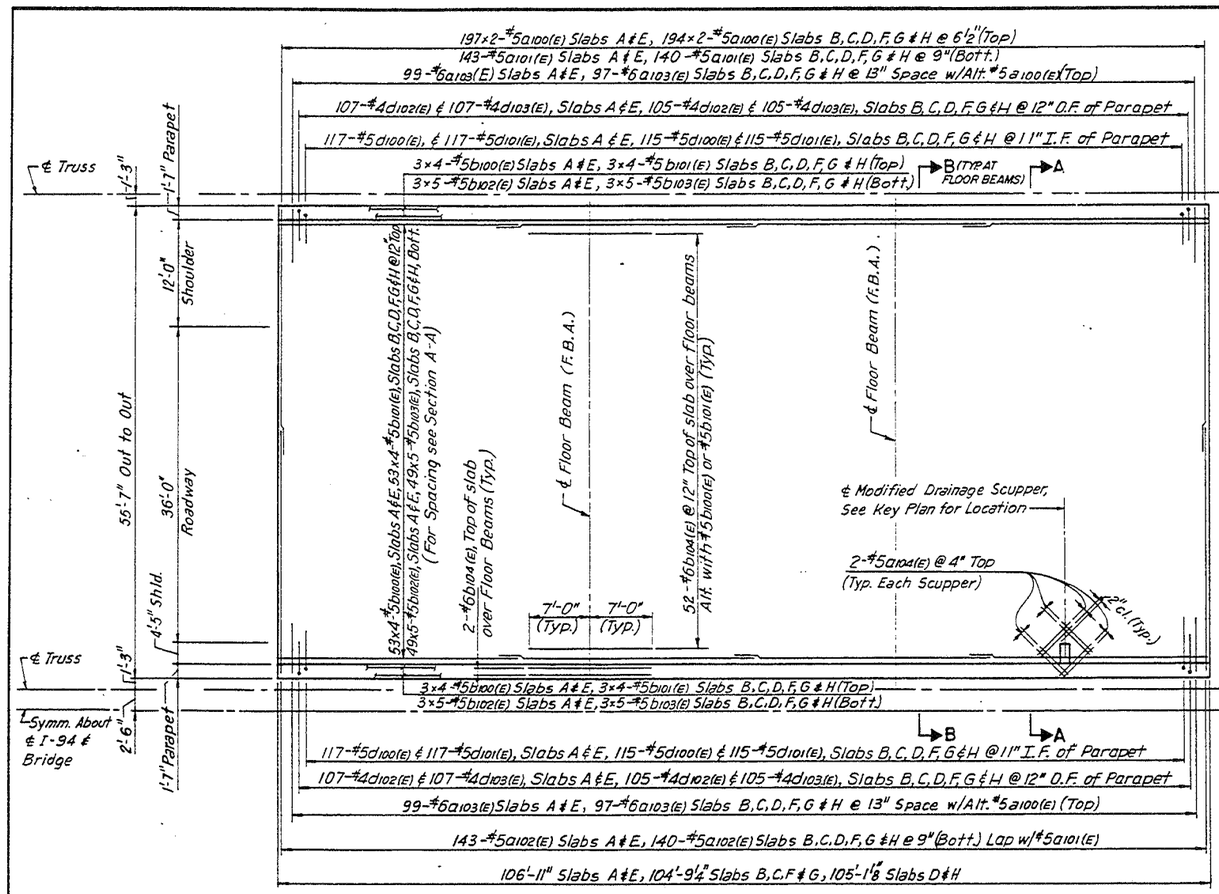


PLAN

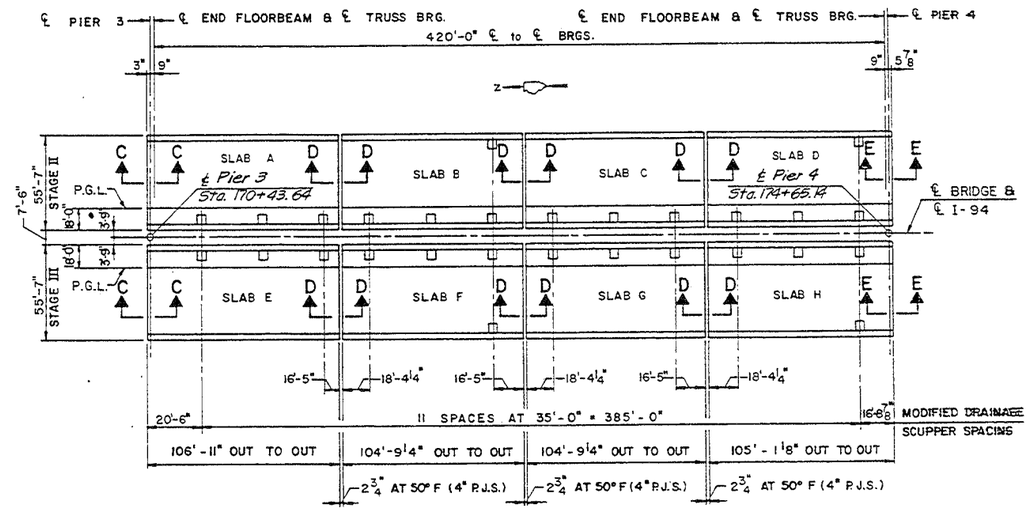


KEY PLAN

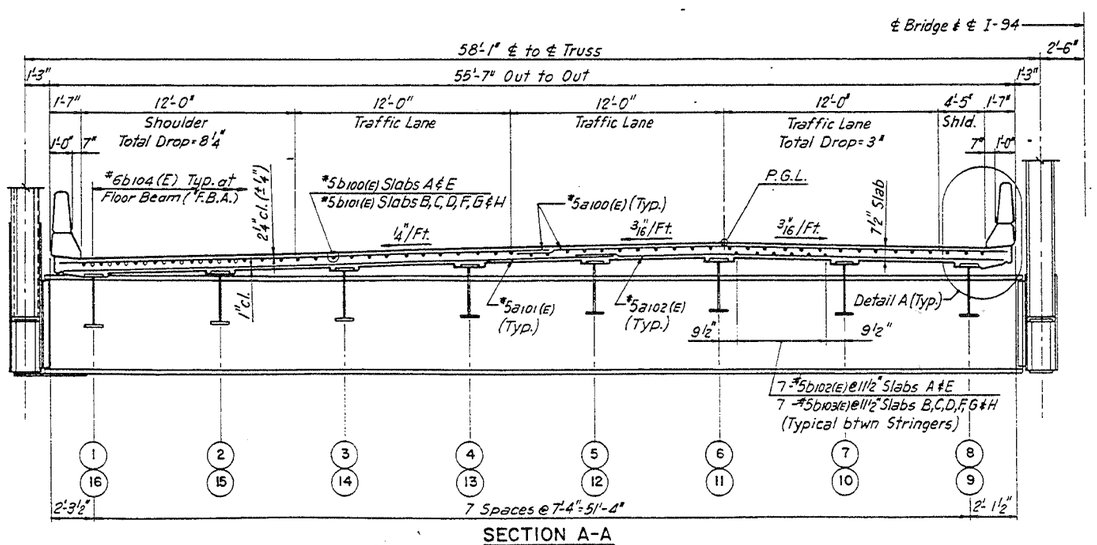


SECTION A-A

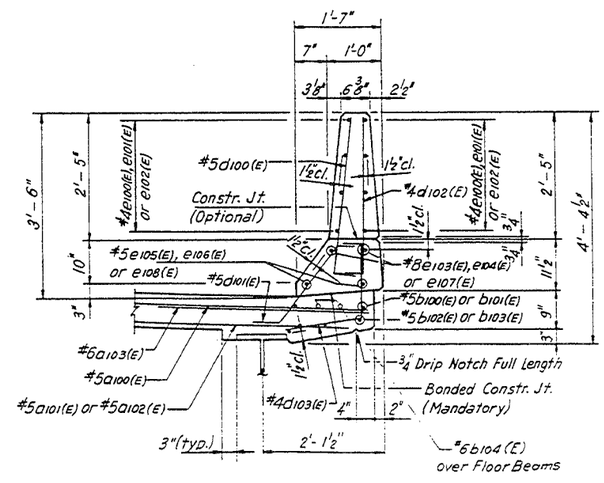


DETAIL A

NOTES:

Reinforcement bars designated (E) shall be Epoxy Coated.
Bars indicated thus 51x4-#5 etc. indicates 51 Lines of Bars with 4 Lengths per Line.
For Parapet Elevation, Bill of Materials, Sections B-B, C-C, D-D, & E-E see Sht. No. S18
For Modified Drainage Scupper Details see Sht. Nos. S53 & S54
Minimum Lap for #5 Bars = 2'-2"; #8 Bars = 4'-3"
For Reinforcement in Floor Beam Fillets see Sheet No. S18

STATE OF ILLINOIS
DEPARTMENT OF TRANSPORTATION
TRUSS SPAN-DECK DETAILS - I
F.A.I.-94 OVER LITTLE CALUMET RIVER
COOK COUNTY

STA. 172 + 54.39
SN 016-0158 (S. BOUND)
SN 016-0159 (N. BOUND)

SCALE
DRAWN BY P.G.
DATE NOV. 1991
CHECKED BY J.M.

* 42(VB-10,12,HB-14,B-11) & 0707.1 HB(R-3)90

| F.A. ROUTE | SECTION | COUNTY | TOTAL SHEETS | SHEET NO. |
|---|---|---|---|---|
| I-94 | * | COOK | 318 | 190 |
| STA. | TO STA. | | | |
| FED. ROAD DIST. NO. 1 | ILLINOIS | FEDERAL AID PROJECT | | |

SHT. S18 OF S54

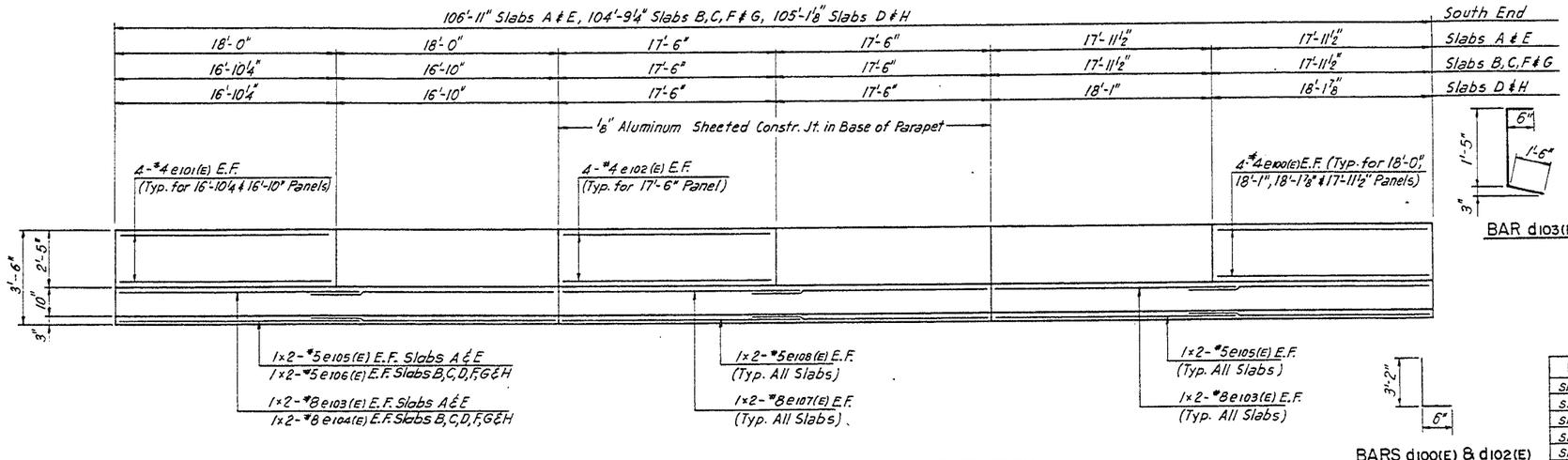


INSIDE FACE OF PARAPET WALL ELEVATION

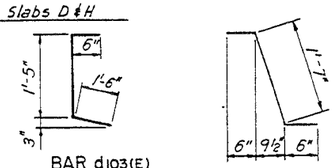


BAR d103(E)

BAR d101(E)

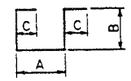





BARS d100(E) & d102(E)

| BAR | A | B | C |
|---|---|---|---|
| S100(E) | 1'-6" | 8" | 6" |
| S101(E) | 1'-6" | 10" | 6" |
| S102(E) | 1'-6" | 11" | 6" |
| S103(E) | 1'-10" | 8" | 6" |
| S104(E) | 1'-10" | 10" | 6" |
| S105(E) | 1'-10" | 11" | 6" |

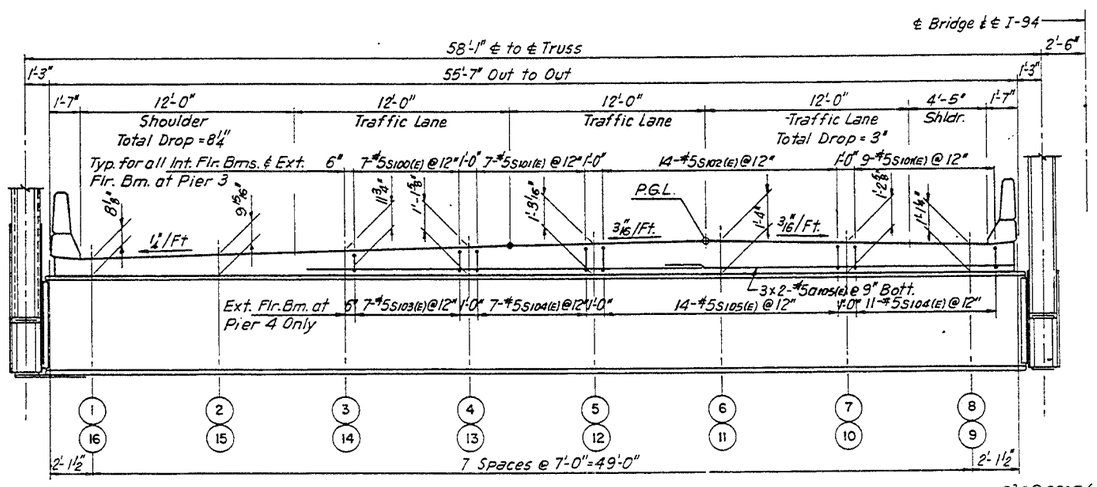


SECTION B-B
(Slab Reinforcement Not Shown For Clarity)
(Typical Reinforcement Over Floor Beams)

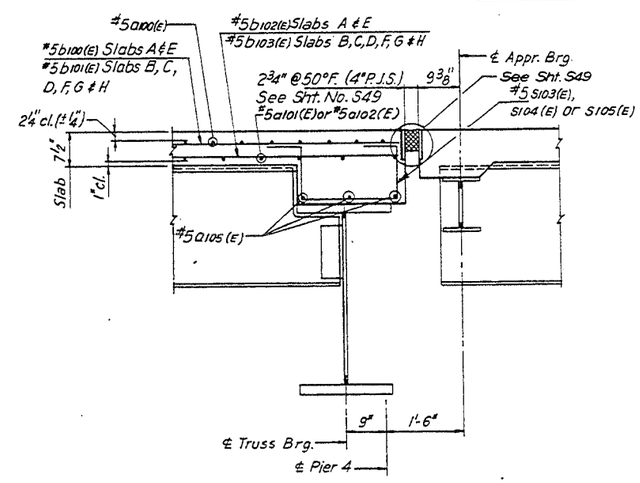


SECTION E-E

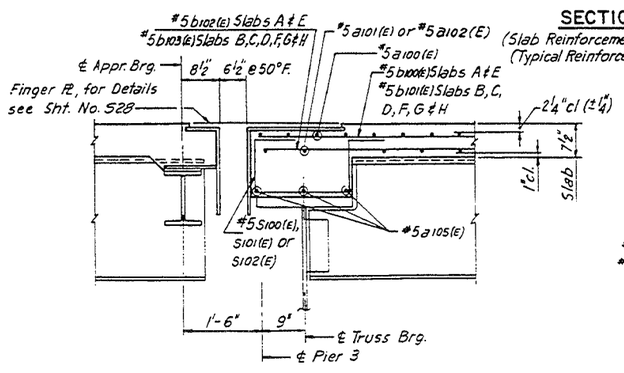


SECTION C-C

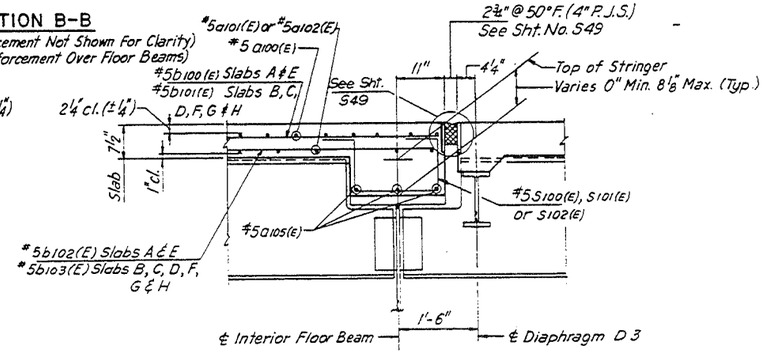


SECTION D-D

BILL OF MATERIAL

| BAR | TOTAL NO. | CONSTR. STAGE II | CONSTR. STAGE III | SIZE | LENGTH | SHAPE |
|---|---|---|---|---|---|---|
| a100(E) | 3116 | 1558 | 1558 | #5 | 28'-7" | — |
| a101(E) | 1126 | 563 | 563 | #5 | 31'-1" | — |
| a102(E) | 1126 | 563 | 563 | #5 | 26'-1" | — |
| a103(E) | 1560 | 780 | 780 | #6 | 4'-0" | — |
| a104(E) | 224 | 112 | 112 | #5 | 4'-0" | — |
| a105(E) | 156 | 78 | 78 | #5 | 20'-6" | — |
| | | | | | | |
| | | | | | | |
| b100(E) | 472 | 236 | 236 | #5 | 28'-4" | — |
| b101(E) | 1416 | 708 | 708 | #5 | 27'-11" | — |
| b102(E) | 600 | 300 | 300 | #5 | 23'-1" | — |
| b103(E) | 1800 | 900 | 900 | #5 | 22'-9" | — |
| b104(E) | 896 | 448 | 448 | #6 | 14'-0" | — |
| | | | | | | |
| | | | | | | |
| d100(E) | 1848 | 924 | 924 | #5 | 3'-8" | L |
| d101(E) | 1848 | 924 | 924 | #5 | 2'-7" | ⌒ |
| d102(E) | 1688 | 844 | 844 | #4 | 3'-8" | L |
| d103(E) | 1688 | 844 | 844 | #4 | 3'-5" | L |
| | | | | | | |
| | | | | | | |
| | | | | | | |
| e100(E) | 320 | 160 | 160 | #4 | 17'-8" | — |
| e101(E) | 192 | 96 | 96 | #4 | 16'-6" | — |
| e102(E) | 256 | 128 | 128 | #4 | 17'-2" | — |
| e103(E) | 80 | 40 | 40 | #8 | 20'-0" | — |
| e104(E) | 48 | 24 | 24 | #8 | 18'-10" | — |
| e105(E) | 80 | 40 | 40 | #5 | 19'-0" | — |
| e106(E) | 48 | 24 | 24 | #5 | 17'-9" | — |
| e107(E) | 64 | 32 | 32 | #8 | 19'-6" | — |
| e108(E) | 64 | 32 | 32 | #5 | 18'-5" | — |
| | | | | | | |
| | | | | | | |
| S100(E) | 168 | 84 | 84 | #5 | 3'-10" | ⊔ |
| S101(E) | 432 | 216 | 216 | #5 | 4'-2" | ⊔ |
| S102(E) | 336 | 168 | 168 | #5 | 4'-4" | ⊔ |
| S103(E) | 14 | 7 | 7 | #5 | 4'-2" | ⊔ |
| S104(E) | 36 | 18 | 18 | #5 | 4'-6" | ⊔ |
| S105(E) | 28 | 14 | 14 | #5 | 4'-8" | ⊔ |

| ITEM | UNIT | TOTAL | CONSTR. STAGES II | CONSTR. STAGES III |
|---|---|---|---|---|
| Reinf. Bars (Epoxy Coated) | Lbs | 351,880 | 175,940 | 175,940 |
| Class X Concrete Superstruc. | C.Y. | 1,369.2 | 684.6 | 684.6 |
| Drainage Scupper Special | Each | 28 | 14 | 14 |
| * Protective Coat | S.Y. | 5,708 | 2,854 | 2,854 |

* Includes Deck Slab Area

NOTES:

Reinforcement bars designated (E) shall be Epoxy Coated.
Bars indicated thus 1x2-#5 etc. indicates 1 Line of Bars with 2 Lengths per Line.
For Parapet Joint Details see Sht. No. S12
Work this Sheet with Sheet No. S17.

STATE OF ILLINOIS
DEPARTMENT OF TRANSPORTATION
TRUSS SPAN-DECK DETAILS - II
F.A.I.-94 OVER LITTLE CALUMET RIVER
COOK COUNTY

STA. 172 + 54.39 SN 016-0158 (S. BOUND)
SN 016-0159 (N. BOUND)

SCALE DRAWN BY P.G.
DATE NOV. 1991 CHECKED BY J.M.

| F.A. ROUTE | SECTION | COUNTY | TOTAL SHEETS | SHEET NO. |
|---|---|---|---|---|
| I-94 | a | COOK | 318 | 191 |
| STA. | | TO STA. | | |
| FED. ROAD DIST. NO. 1 | ILLINOIS | FEDERAL AID PROJECT | | |

SHT. S19 OF S54

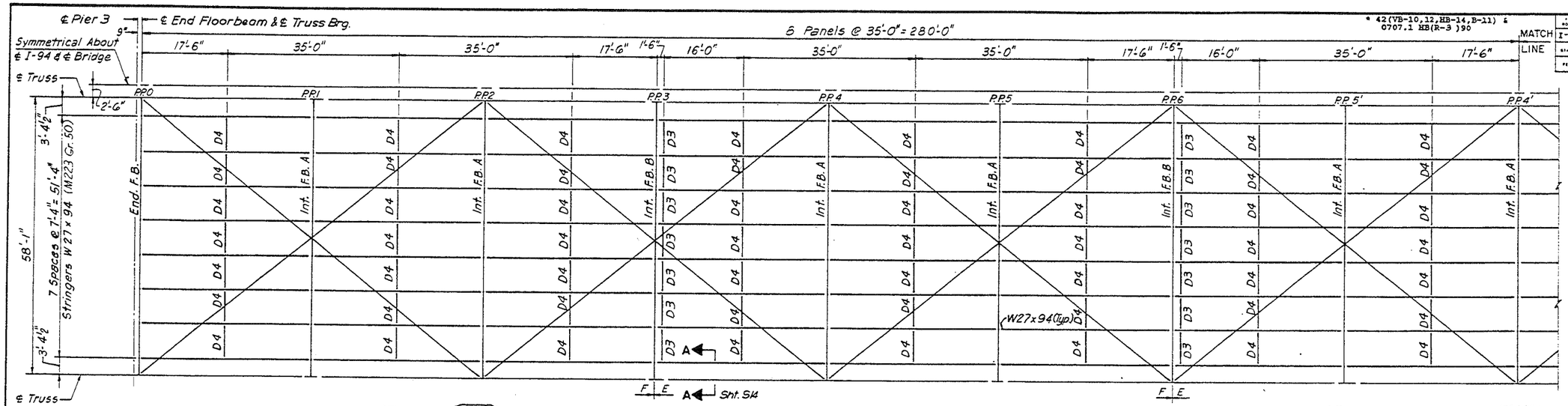


* 42(VB-10,12,HB-14,B-11) & 0707.1 HB(R-3)90

Z

## PLAN-FLOOR FRAMING

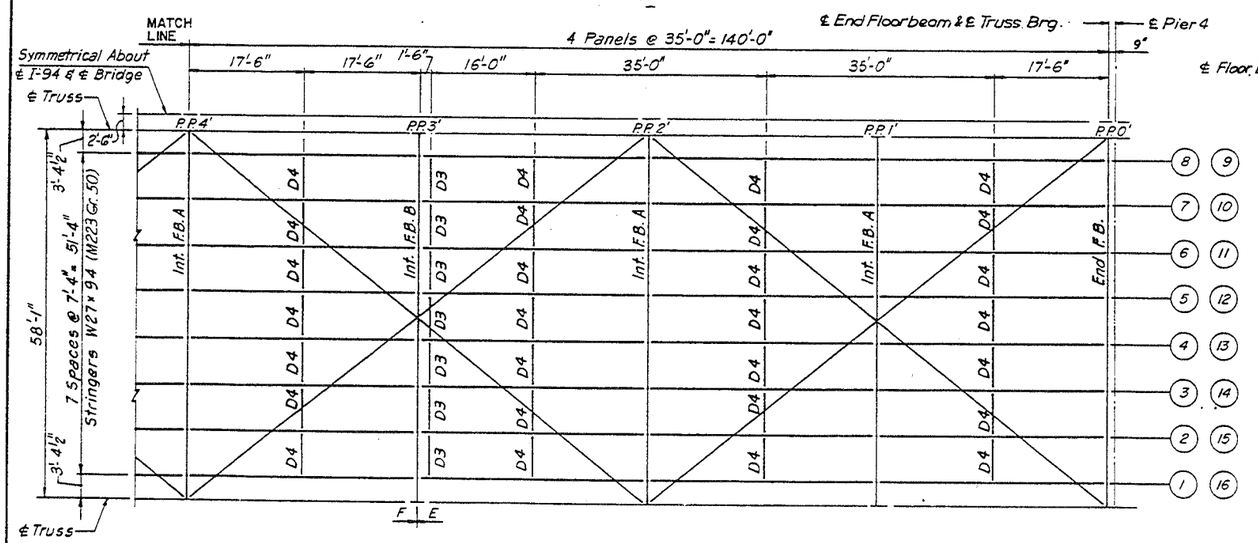


## PLAN-FLOOR FRAMING

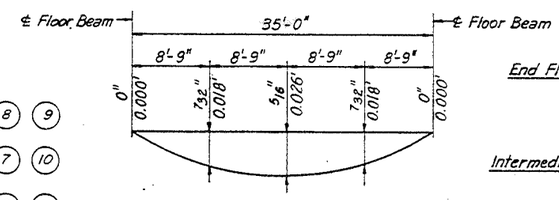


## STRINGER DEFLECTION

*(Deflection for Concrete DL Only)*

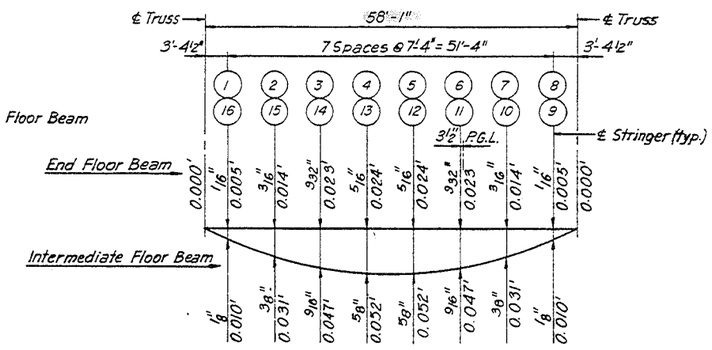


## FLOOR BEAM DEFLECTION

*(Deflection for Concrete DL Only)*

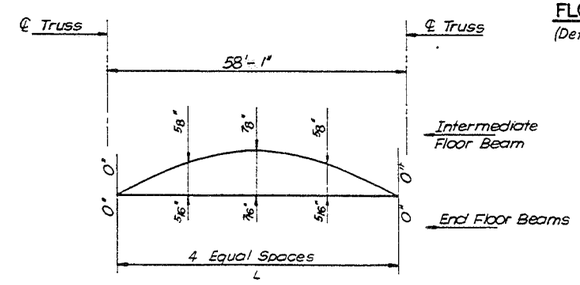


## FLOOR BEAM CAMBER DIAGRAM

NOTES:

For Floorbeam & Stringer Connection Details See Sheet No. 527

For Lateral Bracing Details see Sheet No. 526

For Diaphragms D3 & D4 see Sheet No. 514

| TOP OF FLOOR BEAM ELEVATIONS @ POINT A (**) | | |
|---|---|---|
| LOCATION | STEEL DL ONLY | (STEEL + CONC) DL *** |
| P.P. 0 | 624.105 | 624.105 |
| P.P. 1 | 624.056 | 623.962 |
| P.P. 2 | 623.982 | 623.819 |
| P.P. 3 | 623.902 | 623.677 |
| P.P. 4 | 623.793 | 623.520 |
| P.P. 5 | 623.673 | 623.364 |
| P.P. 6 | 623.517 | 623.204 |
| P.P. 5' | 623.347 | 623.038 |
| P.P. 4' | 623.142 | 622.869 |
| P.P. 3' | 622.924 | 622.694 |
| P.P. 2' | 622.679 | 622.516 |
| P.P. 1' | 622.426 | 622.332 |
| P.P. 0' | 622.150 | 622.150 |

| TRUSS SPAN-MOMENT TABLE | | | | | |
|---|---|---|---|---|---|
| ITEM | BEAM | STRINGER AT 0.5 L | INTERMEDIATE FLOOR BEAM AT 0.5 L | END FLOOR BEAM AT 0.5 L | END FLOOR BEAM AT 0.07 L * |
| I | (IN4) | 3270 | 55,757 | 54,772 | 64,911 |
| DL | (K/I) | 1.2 | 6.4 | 3.4 | $3.4^{K/I}/1270^{K}$ |
| MDL | (I-K) | 184 | 2510 | 1333 | 27/5080 |
| MLL | (I-K) | 240 | 1558 | 1469 | —— |
| MI | (I-K) | 72 | 467 | 441 | —— |
| MTOT | (I-K) | 496 | 4535 | 3243 | 5107 |
| fs | (Ksi) | 24.5 | 24.4 | 17.8 | 23.6 |

| TRUSS SPAN-REACTION TABLE | | | | |
|---|---|---|---|---|
| ITEM | BEAM | STRINGER REACTION AT FLOOR BM. | INTER. FLR. BM. AT BOTH INT. & EXT. TRUSSES | END FLR. BM. AT BOTH INT. & EXT. TRUSSES |
| RDL | (K) | 21 | 187 | 96/1365 * |
| RLL | (K) | 35 | 102 | 95 |
| RIMP | (K) | 11 | 31 | 28 |
| RTOT | (K) | 67 | 320 | 219/1365 |

** For Point A, See Sect. AA on Sht. No. 520

*** Includes parapets

* Jacking Load Case, Jack Locations 0.07 L = 4'-0" from ℄ Trusses.
$F_B = 1.5 \times F_B = 1.5 \times 20 = 30$ Ksi (AASHTO-10.30.5)

STATE OF ILLINOIS
DEPARTMENT OF TRANSPORTATION
TRUSS-FLOOR FRAMING PLAN
F.A.I.-94 OVER LITTLE CALUMET RIVER
COOK COUNTY

STA. 172 + 54.39 — SN 016-0158 (S. BOUND), SN 016-0159 (N. BOUND)

SCALE — DRAWN BY P.G.

DATE NOV. 1991 — CHECKED BY J.M.

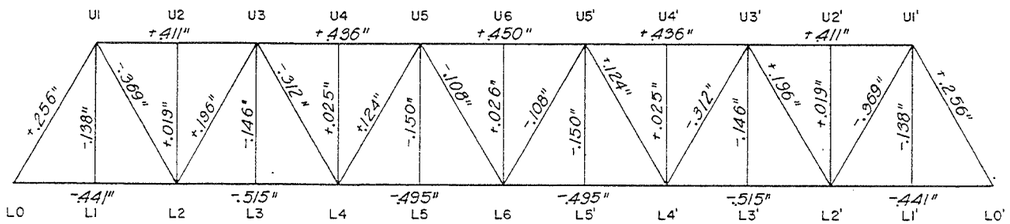


NOTE:
Lengths of members to be computed for geometric shape of Truss. Corrections indicated above are to be applied to these lengths, (+ Indicates Lengthening, and − Indicates Shortening).

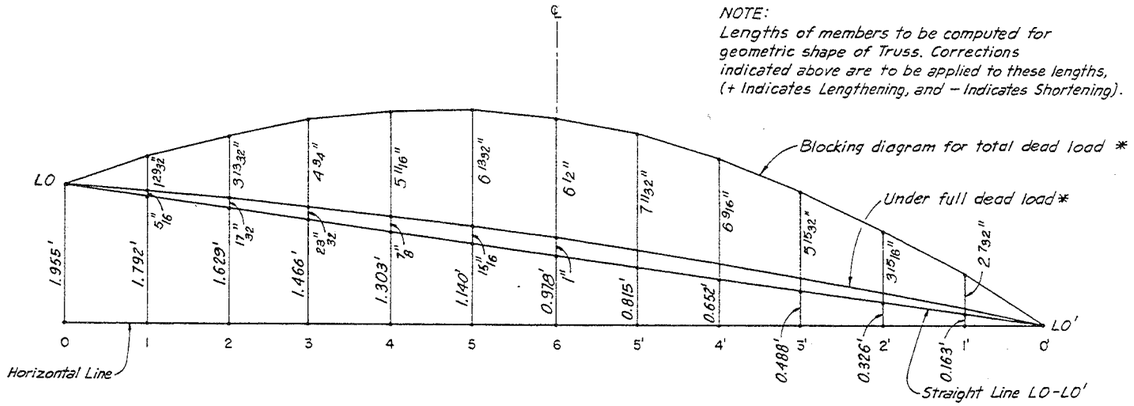


## DEAD LOAD CAMBER DIAGRAMS

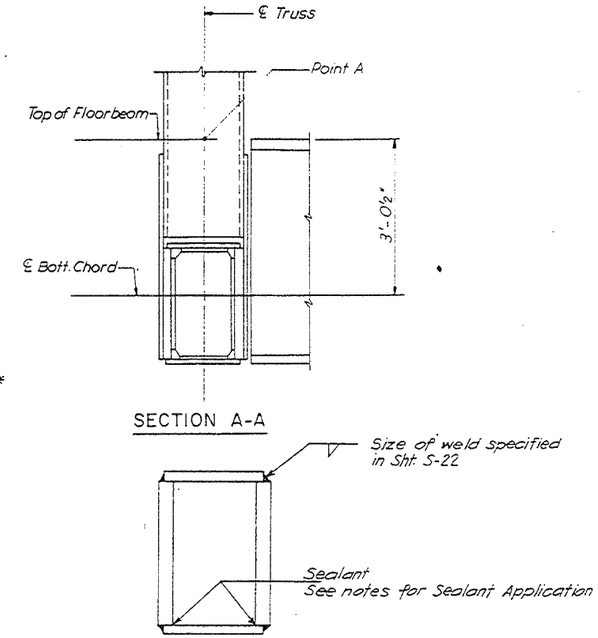


## TYPICAL BOX CROSS-SECTION

Notes for suggested Sequence for Fabrication and Sealant Application:
1). Weld the Bottom Cover Plate in place.
2). Apply the Sealant to the bottom Seams.
3). Weld the top cover Plate in Place.
If fabricator wishes to assembly box section completely prior to adding sealant, He or She shall submit proposed method for applying sealant thru holes in bottom of Cover Plate.

## TRUSS MEMBER LENGTH

| | Member I. D. | Theoretical Length (W. P.'S) | Theoretical Length Corrected For Strain Due To DL (*) |
|---|---|---|---|
| Top Chord | U1U3 | 70.0' | 70.034' |
| | U3U5 | 70.0' | 70.036' |
| | U5U5' | 70.0' | 70.038' |
| Bottom Chord | L0L2 | 70.0' | 69.963' |
| | L2L4 | 70.0' | 69.957' |
| | L4L6 | 70.0' | 69.959' |
| Diagonals | L0U1 | 69.462' | 69.483' |
| | L2U1 | 69.462' | 69.431' |
| | L2U3 | 69.462' | 69.478' |
| | L4U3 | 69.462' | 69.432' |
| | L4U5 | 69.462' | 69.472' |
| | L6U5 | 69.462' | 69.453' |
| Verticals | L1U1 | 60.0' | 59.989' |
| | L2U2 | 60.0' | 60.002' |
| | L3U3 | 60.0' | 59.988' |
| | L4U4 | 60.0' | 60.002' |
| | L5U5 | 60.0' | 59.988' |
| | L6U6 | 60.0' | 60.002' |

(*) DL of Steel, Concrete only

TRUSS REACTIONS

| | |
|---|---|
| D.L. | 1,461 k |
| L.L. | 285.7 k |
| I | 25.7 k |
| Total | 1,772.4 k |

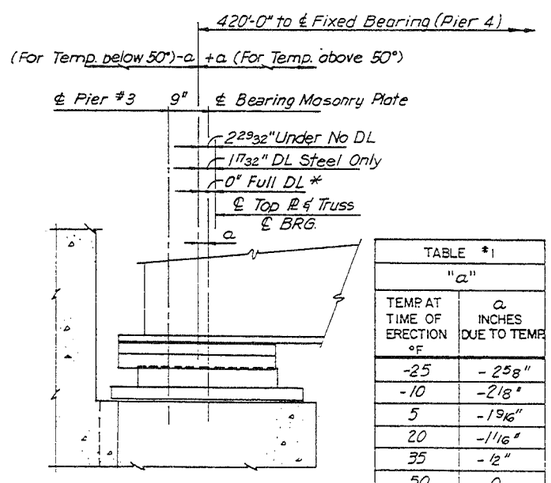


| TABLE #1 "a" | |
|---|---|
| TEMP AT TIME OF ERECTION °F | a INCHES DUE TO TEMP |
| -25 | -2 5/8" |
| -10 | -2 1/8" |
| 5 | -1 9/16" |
| 20 | -1 1/16" |
| 35 | -12" |
| 50 | 0 |
| 65 | 12" |
| 80 | 1 1/16" |
| 95 | 1 9/16" |
| 110 | 2 1/8" |
| 125 | 2 5/8" |

## SHOE SETTINGS AT 50° F

NOTE:
Adjust the masonry plate setting shown by the "a" dimension for temperature at the time of erection as provided in table #1, after adjusting it by the camber effect (1 17/32") due to D.L. steel only.
*Excluding Future Wearing Surface (FWS)
Adjust the masonry plate setting shown by the camber effect (1 17/32") due to D.L. steel only.

### TRUSS SPAN NOTES

DESIGN LOADINGS: HS20-44 & ALTERNATE. IMPACT AS A PERCENT OF LIVE LOAD IS AS FOLLOWS:

| | |
|---|---|
| TRUSS CHORDS (TOP & BOTTOM) | 9.2% |
| TRUSS VERTICALS (HANGERS) | 28.6 |
| STRINGERS | 30.0 |
| FLOOR BEAMS | 27.3 |

| DIAGONAL | FOR TENSION | FOR COMPRESSION |
|---|---|---|
| L0-U1 | – | 9.2% |
| L2-U1 | 9.9% | 30.0 |
| L2-U3 | 24.7 | 10.7 |
| L4-U3 | 11.6 | 21.0 |
| L4-U5 | 18.0 | 12.7 |
| L6-U5 | 14.2 | 15.8 |

UNIT STRESSES: AS GIVEN IN THE A.A.S.H.T.O. 1989 STANDARD SPECIFICATIONS, ARTICLE 10.32 (SERVICE LOAD DESIGN METHOD).

LOCAL BUCKLING REQUIREMENTS: ELEMENTS OF COMPRESSION MEMBERS SHALL BE LIMITED TO B/T RATIOS IN A.A.S.H.T.O. 1989 STANDARD SPECIFICATIONS, ARTICLE 10.35.2.3

CONNECTIONS: ALL CONNECTIONS ARE TO BE MADE WITH 7/8" ø M164 H.S. BOLTS UNLESS OTHERWISE SHOWN OR NOTED. SHOP AND FIELD CONNECTIONS MAY BE INTERCHANGED.

FOR TYPICAL WELD DETAILS SEE SHT. NO. S22.

SHOP SPLICES: OPTIONAL FULL PENETRATION BUTT WELD SPLICES WILL BE PERMITTED ONLY IN PLATES OF TRUSS MEMBERS OVER 40 FEET LONG, AND ONLY ONE SPLICE WILL BE PERMITTED IN EACH PLATE. A WEB OR COVER PLATE SHALL NOT BE SPLICED CLOSER THAN 6'-0 FROM THE SPLICE IN ITS COMPANION WEB OR COVER PLATE. COVER PLATES AND WEB PLATES SHALL BE SPLICED 3'-0" MINIMUM FROM ADJACENT WEB OR COVER PLATE SPLICE. COVER PLATE SPLICES SHALL BE LOCATED IN THE MIDDLE HALF OF THE SPACE BETWEEN PERFORATIONS.

NET SECTION: IN ORDER TO MAINTAIN THE MINIMUM NET SECTION IN TENSION MEMBERS AND THEIR CONNECTIONS, THE NUMBER OF ROWS OF BOLTS SHOWN CANNOT BE INCREASED. THE NUMBER OF BOLTS PER ROW CAN BE VARIED PROVIDED SYMMETRY OF THE CONNECTION/SPLICE IS MAINTAINED.

PEREORATED PLATES: PROVIDE 8" X 16" ACCESS HOLES IN BOTTOM COVER PLATES OF ALL CHORD BOX MEMBERS, EXCEPT AS OTHERWISE SHOWN OR NOTED ON DRAWINGS. ALL PERFORATIONS SHALL BE SPACED AT 3'-3" CENTERS UNLESS OTHERWISE SHOWN. PERFORATIONS IN TRUSS DIAGONALS AND PORTAL BRACING SHALL BE AS SHOWN OR NOTED ON THE DRAWINGS.

CAMBER: TRUSSES SHALL BE CAMBERED FOR THE DESIGN DEAD LOAD AND VERTICAL CURVE.

ERECTION: BEFORE ORDERING MATERIAL THE CONTRACTOR SHALL SUBMIT TO THE ENGINEER FOR APPROVAL, COMPLETE PLANS SHOWING THE METHOD OF ERECTION HE PROPOSES TO USE, AND SHOWING ERECTION STRESSES IN ALL TRUSS MEMBERS. ERECTION STRESSES SHALL BE COMPOSED OF THE DEAD LOAD STRESS OF THE STRUCTURE AND ERECTION EQUIPMENT PLUS THE STRESS OF A 75 POUND PER SQUARE FOOT WIND ON THE STRUCTURE, AS DEFINED IN THE A.A.S.H.T.O. STANDARD SPECIFICATIONS. ERECTION STRESSES SHALL NOT EXCEED THE NORMAL UNIT STRESSES BY MORE THAN 25%. NO PAYMENT WILL BE MADE FOR ANY EXTRA MATERIAL REQUIRED DUE TO ERECTION CONDITIONS.

JACKING PROVISIONS: PROVISIONS HAVE BEEN MADE FOR JACKING THE FULL DEAD LOAD AT L0 AND L6'.

SEE SHEET S2 FOR GENERAL NOTES.

STATE OF ILLINOIS
DEPARTMENT OF TRANSPORTATION
TRUSS CAMBER DIAGRAMS & NOTES
F.A.I.-94 OVER LITTLE CALUMET RIVER
COOK COUNTY

STA. 172 + 54.39 — SN 016-0158 (S. BOUND) SN 016-0159 (N. BOUND)

SCALE — DRAWN BY P.G.

DATE NOV. 1991 — CHECKED BY J.M.

| ROUTE | SECTION | COUNTY | TOTAL SHEETS | SHEET NO. |
|---|---|---|---|---|
| I-94 | * | COOK | 318 | 193 |
| STA. | | TO STA. | | |
| FED. ROAD DIST. NO. 7 | ILLINOIS | FEDERAL AID PROJECT | | |

SHT. S21 OF S54

## TABLE OF TRUSS MEMBERS AND STRESSES

| | Member | Dead Load DL | Live Load LL | Impact I | Wind Load on Structure T or C W | 3W + WL | Design Stresses Group I | Group II | Group III | Area Furnished Eff. Gr.(*) | Net | L/r | Material Type | Make-up ** |
|---|---|---|---|---|---|---|---|---|---|---|---|---|---|---|
| Top Chord | U1U2 | 1411 c | 267 c | 25 c | 114 c/T | — | 1703 c | 1525 c | — | 90 | 90 | 38.3 | M223/Gr.50 | 2 Pl's 1½"×25½" 2 Cover Pl's ¾"×17½" |
| | U2U3 | 1411 c | 267 c | 25 c | 114 c/T | — | 1703 c | 1525 c | — | 90 | 90 | 38.3 | | Same as U1U2 |
| | U3U4 | 2260 c | 427 c | 39 c | 171 c/114 T | — | 2726 c | 2431 c | — | 136 | 136 | 40.3 | | 2 Pl's 2¼"×24" 2 Cover Pl's 1½"×17½" |
| | U4U5 | 2260 c | 427 c | 39 c | 171 c/114 T | — | 2726 c | 2431 c | — | 136 | 136 | 40.3 | | Same as U3U4 |
| | U5U6 | 2541 c | 480 c | 45 c | 163 c/179 T | — | 3066 c | 2704 c | — | 148 | 148 | 41.7 | | 2 Pl's 2½"×24" 2 Cover Pl's 1½"×17½" |
| Bottom Chord | L0L1 | 775 T | 147 T | 14 T | 232 c/T | 92 c/T | 936 T | 1007 T | 1028 T | 46 | 43 | — | | 2 Pl's ¾"×26¼" 2 Cover Pl's ⅜"×17½" F.C.M |
| | L1L2 | 775 T | 147 T | 14 T | 232 c/T | 92 c/T | 936 T | 1007 T | 1028 T | 46 | 43 | — | | Same as L0L1 |
| | L2L3 | 1907 T | 361 T | 33 T | 372 c/232 T | 147 c/92 T | 2301 T | 2139 T | 2393 T | 97 | 90 | — | | 2 Pl's 1⅜"×25½" 2 Cover Pl's ¾"×17½" F.C.M. |
| | L3L4 | 1907 T | 361 T | 33 T | 372 c/232 T | 147 c/92 T | 2301 T | 2139 T | 2393 T | 97 | 90 | — | | Same as L2L3 |
| | L4L5 | 2472 T | 466 T | 44 T | 418 c/372 T | 165 c/147 T | 2982 T | 2844 T | 3129 T | 131 | 122 | — | | 2 Pl's 2¼"×25" 2 Cover Pl's 1"×17½" F.C.M |
| | L5L6 | 2472 T | 466 T | 44 T | 418 c/372 T | 165 c/147 T | 2982 T | 2844 T | 3129 T | 131 | 122 | — | | Same as L4L5 |
| Diagonals | L0U1 | 1537 c | 307 c | 28 c | — | — | 1872 c | — | — | 156 | 156 | 80.6 | M223/Gr.50 | 2 Pl's 2⅜"×27" 2 Cover Pl's 1⅝"×17½" |
| | L2U1 | 1263 T | 256 T/10 c | 26 T/3 c | — | — | 1545 T | — | — | 89 | 80 | — | M183/Gr.36 | 1 Pl ¾"×14¾" 2 Pl's 1⅞"×21" F.C.M. |
| | L2U3 | 985 c | 22 T/213 c | 6 T/23 c | — | — | 1221 c | — | — | 131 | 131 | 100.3 | | 2 Pl's 2¼"×25" 2 Cover Pl's 1"×17½" |
| | L4U3 | 702 T | 173 T/34 c | 20 T/8 c | — | — | 895 T | — | — | 59 | 52 | — | | 1 Pl ⅜"×16" 2 Pl's 1½"×21" F.C.M. |
| | L4U5 | 420 c | 52 T/136 c | 11 T/18 c | — | — | 574 c | — | — | 88 | 88 | 119.4 | | 2 Pl's 1⅞"×19¼" 2 Cover Pl's ⅞"×17½" |
| | L6U5 | 138 T | 104 T/75 c | 15 T/13 c | — | — | 257 T | — | — | 33 | 32 | — | | 1 Pl ⅜"×17" 2 Pl's ¾"×18" F.C.M. |
| Verticals | L1U1 | 179 T | 101 T | 26 T | — | — | 306 T | — | — | 28 | 27 | — | | 1 Pl ⅜"×17" 2 Pl's ¾"×15" N.T.R. |
| | L2U2 | 24 c | — | — | — | — | 24 c | — | — | 31 | 31 | 115.9 | | 1 Pl ⅜"×17⅝" 2 MC 18×42.7 |
| | L3U3 | 188 T | 101 T | 26 T | — | — | 315 T | — | — | 28 | 27 | — | | Same as L1U1 |
| | L4U4 | 31 c | — | — | — | — | 31 c | — | — | 31 | 31 | 115.9 | | Same as L2U2 |
| | L5U5 | 192 T | 101 T | 26 T | — | — | 319 T | — | — | 28 | 27 | — | | Same as L1U1 |
| | L6U6 | 33 c | — | — | — | — | 33 c | — | — | 31 | 31 | 115.9 | M183/Gr.36 | Same as L2U2 |

Stresses are given in kips.
C = Compression, T = Tension.
WL = Wind on Live Load.

Allowable Stresses For Combination Of Loadings.
Group I = DL + LL + I = 100% normal unit stress.
Group II = DL + W = 125% normal unit stress.
Group III = DL + LL + I + .3W + WL = 125% normal unit stress.

* Effective Gross Area as defined in Note "i" to AASHTO Table 10.32.1A
** All truss detail material to be used for splice plates, gusset plates, fills, shims, connection angles and diaphragms is to be AASHTO M183 unless noted on Sht. Nos. S22 thru S26.

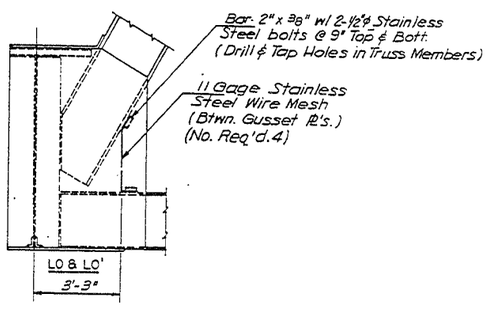


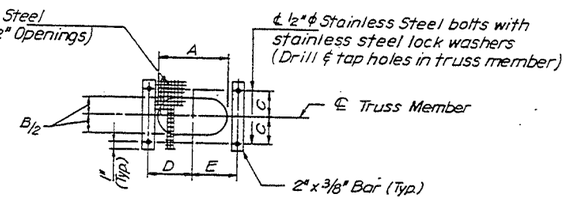


| BIRD SCREEN DATA | | | | | | |
|---|---|---|---|---|---|---|
| HANDHOLE TYPE | HANDHOLE SIZE A | B | C | D | E | NO. REQ'd. |
| A | 16" | 8" | 5" | 9 1/16" | 9 1/16" | 680 |
| B | 11" | 5½" | 2½" | 5⅞" | 5⅜" | 84 |
| C | 12" | 6" | 4 1/16" | 6⅞" | 6⅞" | 4 |
| D | 6" | 6" | 4 1/16" | 4 1/16" | 4 1/16" | 8 |

BIRD SCREEN DETAIL

* 42(VB-10,12,HB-14,B-11) & 0707.1 HB(R-3)90

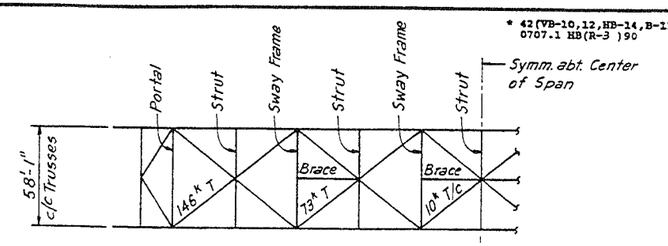


All Diagonals to be W27×84
All Struts to be W27×114
All Braces to be W27×84

PLAN OF TOP LATERALS

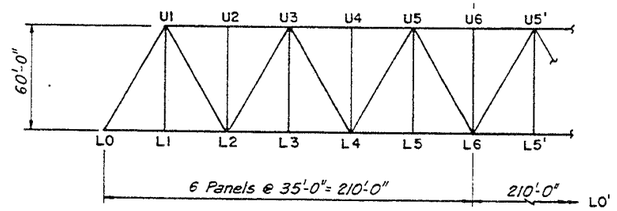


NOTE:
Dimensions of Truss shown are for the final geometric shape after calculated dead load deflection has occurred.
Chord members to be straight between splice points.
Camber diagram is shown on drawing No. S20

ELEVATION OF TRUSS

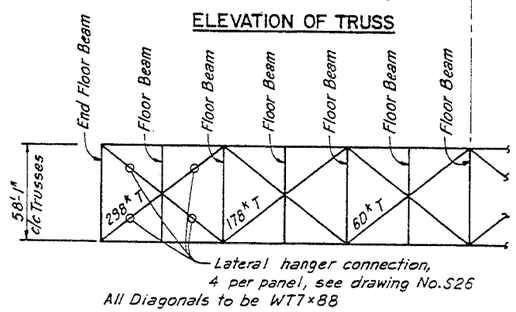


All Diagonals to be WT7×88

PLAN OF BOTTOM LATERALS

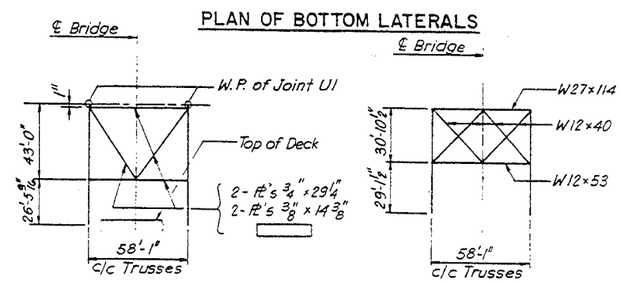


PORTAL L0-U1

SWAY FRAME U3 & U5

ELEVATION OF PORTAL AND SWAY FRAMES

NOTES:
1. N.T.R. Indicates Supplemental Requirements for Notch Toughness Zone 2.
2. Work this Drawing with Sheet Nos. S20 and S22 thru S26.
3. F.C.M. Indicates Base Metal Charpy V-Notch requirements for Fracture critical Members Zone 2.

STATE OF ILLINOIS
DEPARTMENT OF TRANSPORTATION
TRUSS - STRESS SHEET
F.A.I.-94 OVER LITTLE CALUMET RIVER
COOK COUNTY

STA. 172 + 54.39
SN 016-0158 (S. BOUND)
SN 016-0159 (N. BOUND)

SCALE
DRAWN BY P.G.
DATE NOV. 1991
CHECKED BY J.M.

42(VB-10,12,HB-14,B-11) &
0707.1 HB(R-3 )90

| F.A. ROUTE | SECTION | COUNTY | TOTAL SHEETS | SHEET NO. |
|---|---|---|---|---|
| 1-94 | * | COOK | 318 | 194 |
| STA. | | TO STA. | | |
| FED. ROAD DIST. NO. 7 | ILLINOIS | FEDERAL AID PROJECT | | |

SHT. S22. OF S54

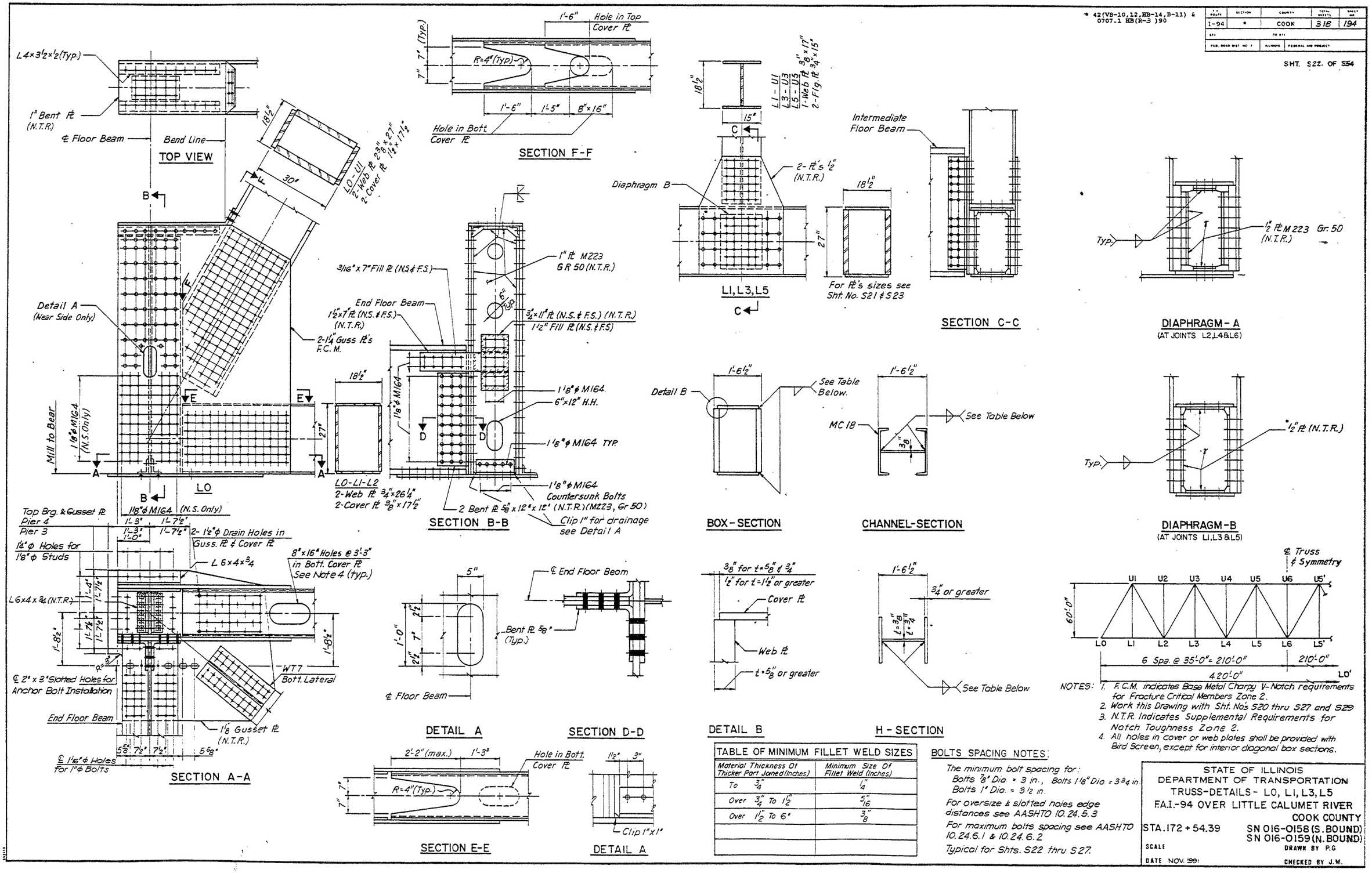


| TABLE OF MINIMUM FILLET WELD SIZES | |
|---|---|
| Material Thickness Of Thicker Part Joined (Inches) | Minimum Size Of Fillet Weld (Inches) |
| To ¾" | ¼" |
| Over ¾" To 1½" | 5/16" |
| Over 1½" To 6" | ⅜" |
| | |
| | |

BOLTS SPACING NOTES:

The minimum bolt spacing for:
Bolts ⅞" Dia. = 3 in., Bolts 1⅛" Dia. = 3¾ in.
Bolts 1" Dia. = 3½ in.

For oversize & slotted holes edge distances see AASHTO 10.24.5.3

For maximum bolts spacing see AASHTO 10.24.6.1 & 10.24.6.2

Typical for Shts. S22 thru S27.

NOTES:
1. F.C.M. indicates Base Metal Charpy V-Notch requirements for Fracture Critical Members Zone 2.
2. Work this Drawing with Sht. Nos S20 thru S27 and S29
3. N.T.R. Indicates Supplemental Requirements for Notch Toughness Zone 2.
4. All holes in cover or web plates shall be provided with Bird Screen, except for interior diagonal box sections.

STATE OF ILLINOIS
DEPARTMENT OF TRANSPORTATION
TRUSS-DETAILS - L0, L1, L3, L5
F.A.I.-94 OVER LITTLE CALUMET RIVER
COOK COUNTY

STA. 172 + 54.39
SN 016-0158 (S. BOUND)
SN 016-0159 (N. BOUND)

SCALE
DRAWN BY P.G.
DATE NOV. 1991
CHECKED BY J.M.

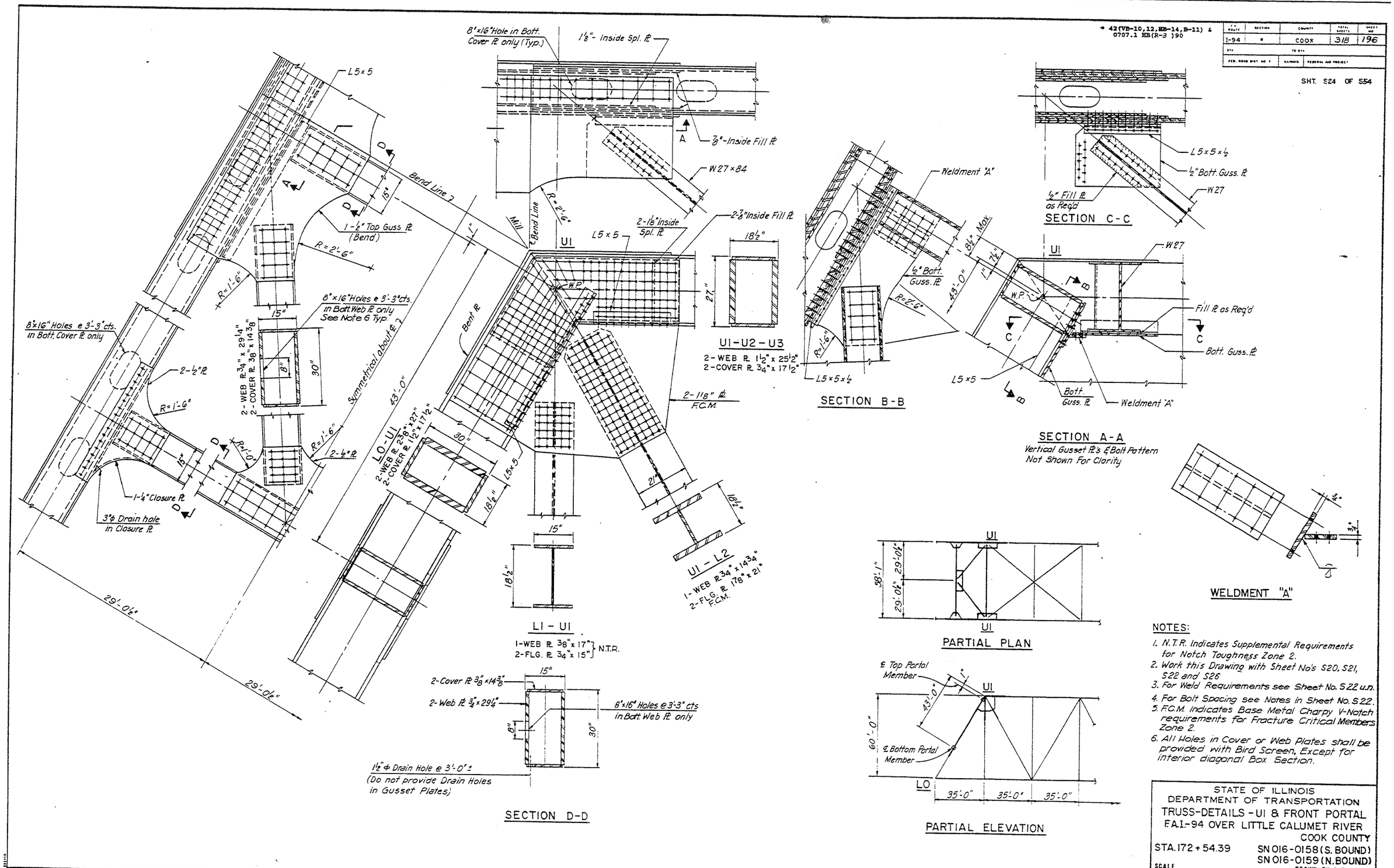


NOTES:

1. N.T.R. Indicates Supplemental Requirements for Notch Toughness Zone 2.
2. Work this Drawing with Sheet No's S20, S21, S22 and S25
3. For Weld Requirements see Sheet No. S22 u.n.
4. For Bolt Spacing see Notes in Sheet No. S22.
5. F.C.M. indicates Base Metal Charpy V-Notch requirements for Fracture Critical Members Zone 2.
6. All Holes in Cover or Web Plates shall be provided with Bird Screen, Except for interior diagonal Box Section.

STATE OF ILLINOIS
DEPARTMENT OF TRANSPORTATION
TRUSS-DETAILS - U1 & FRONT PORTAL
F.A.I.-94 OVER LITTLE CALUMET RIVER
COOK COUNTY

STA. 172 + 54.39 — SN 016-0158 (S. BOUND) SN 016-0159 (N. BOUND)

SCALE — DRAWN BY S.P.

DATE NOV. 1991 — CHECKED BY J.M.

* 42(VB-10,12,HB-14,B-11) & 0707.1 HB(R-3 )90

| F.A. ROUTE | SECTION | COUNTY | TOTAL SHEETS | SHEET NO. |
|---|---|---|---|---|
| I-94 | * | COOK | 318 | 197 |
| STA. | | TO STA. | | |
| FED. ROAD DIST. NO. 1 | ILLINOIS | FEDERAL AID PROJECT | | |

SHT. S25 OF S54

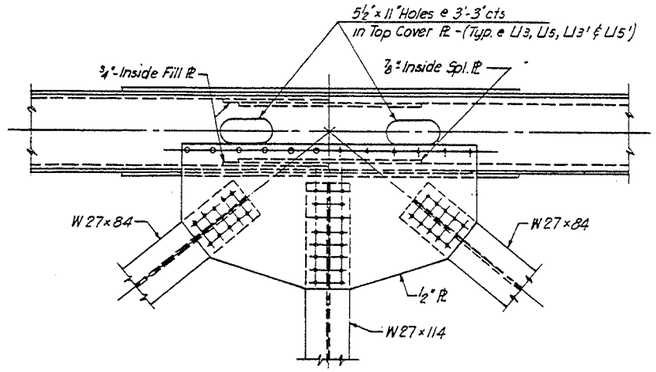


VIEW A-A

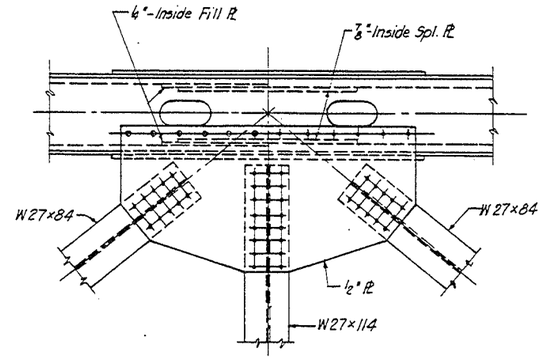


VIEW B-B

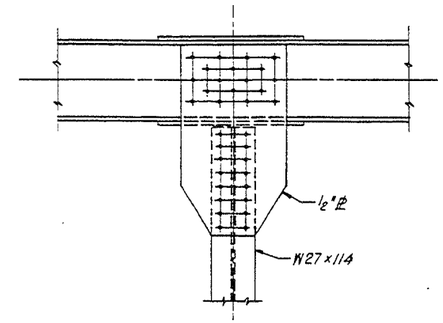


VIEW C-C

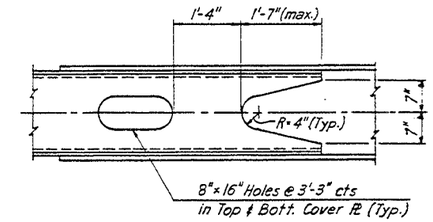


VIEW H-H

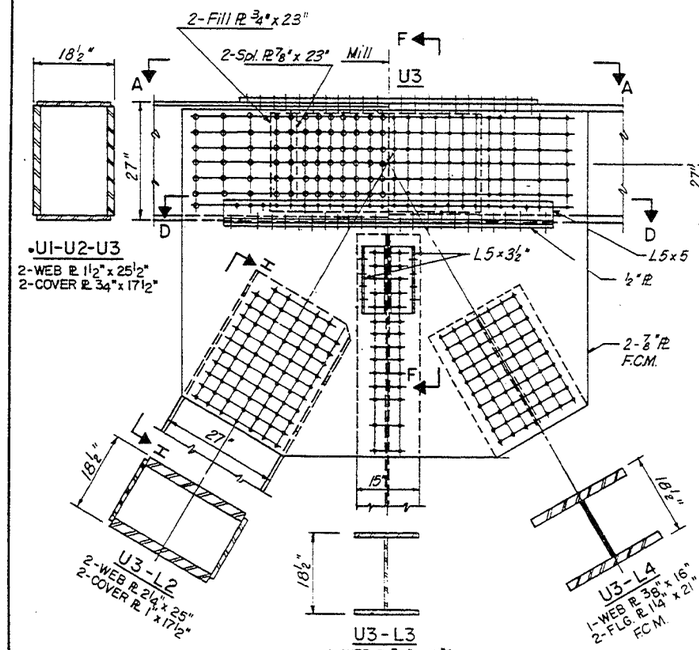


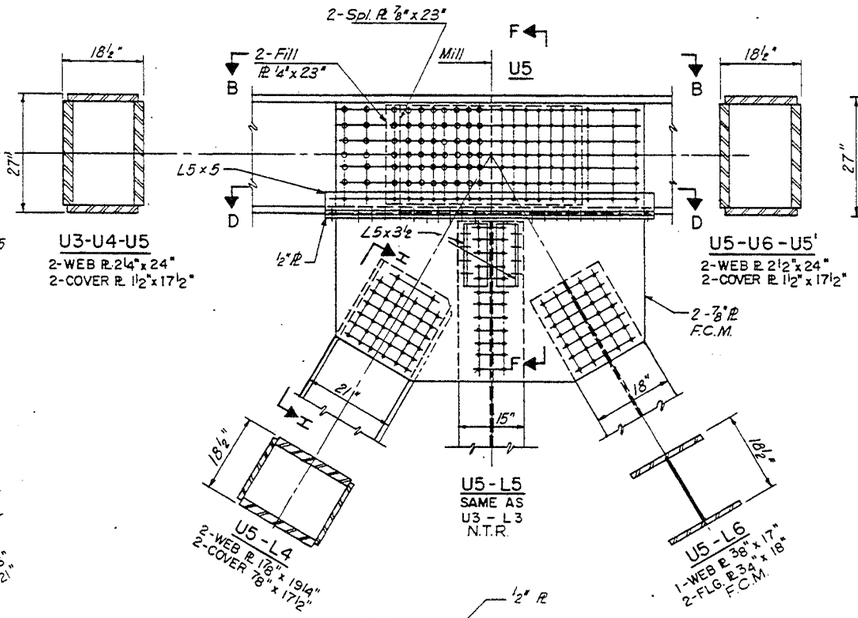


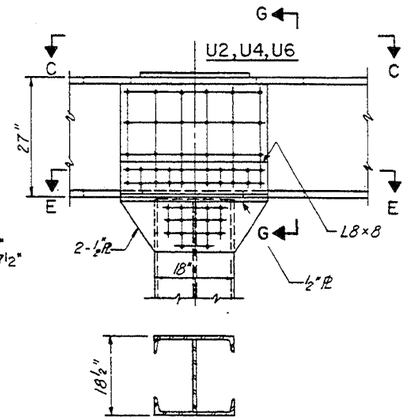


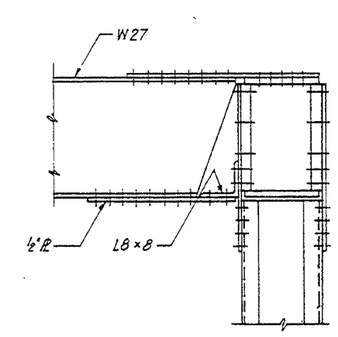


SECTION G-G

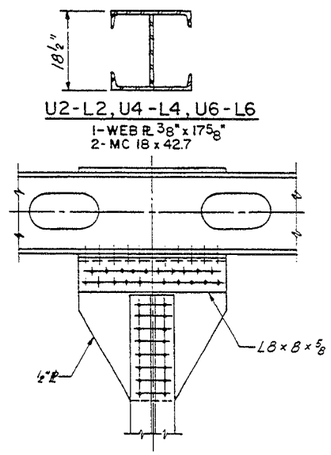


SECTION E-E

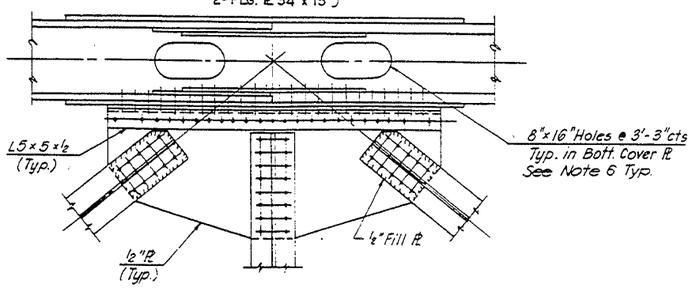


SECTION D-D

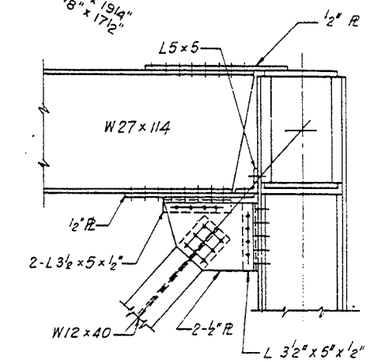


SECTION F-F

NOTES:

1. N.T.R. Indicates Supplemental Requirements for Notch Toughness Zone 2.
2. Work this Drawing with Sheet Nos S20 thru S26
3. For Weld Requirements see Sheet No. S22 U.N.
4. For Bolt Spacing see Sheet No. S22.
5. F.C.M. Indicates Base Metal Charpy V-Notch requirements for Fracture critical Members Zone 2.
6. All holes in Cover Plates shall be provided with Bird Screen, Except for interior diagonal box section.

STATE OF ILLINOIS
DEPARTMENT OF TRANSPORTATION
TRUSS-DETAILS U2,U3,U4,U5&U6
FAI-94 OVER LITTLE CALUMET RIVER
COOK COUNTY

STA. 172+54.39 SN 016-0158 (S.BOUND)
SN 016-0159 (N.BOUND)

SCALE DRAWN BY S.P.

DATE NOV. 1991 CHECKED BY J.M.

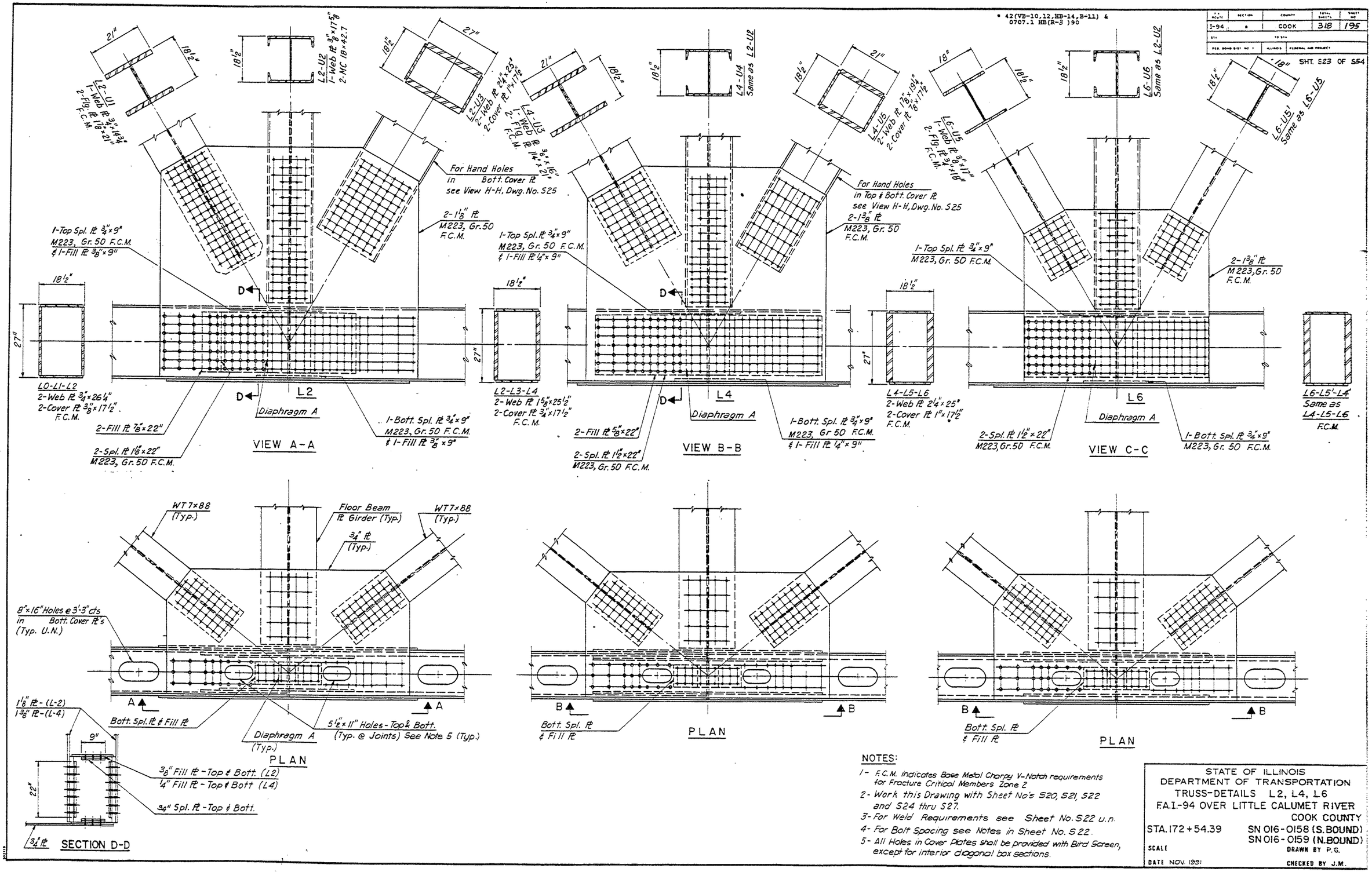


NOTES:

1- F.C.M. indicates Base Metal Charpy V-Notch requirements for Fracture Critical Members Zone 2.
2- Work this Drawing with Sheet No's S20, S21, S22 and S24 thru S27.
3- For Weld Requirements see Sheet No. S22 u.n.
4- For Bolt Spacing see Notes in Sheet No. S22.
5- All Holes in Cover Plates shall be provided with Bird Screen, except for interior diagonal box sections.

STATE OF ILLINOIS
DEPARTMENT OF TRANSPORTATION
TRUSS-DETAILS L2, L4, L6
F.A.I.-94 OVER LITTLE CALUMET RIVER
COOK COUNTY

STA. 172+54.39 — SN 016-0158 (S.BOUND)
SN 016-0159 (N.BOUND)

SCALE
DRAWN BY P.G.
DATE NOV. 1991
CHECKED BY J.M.

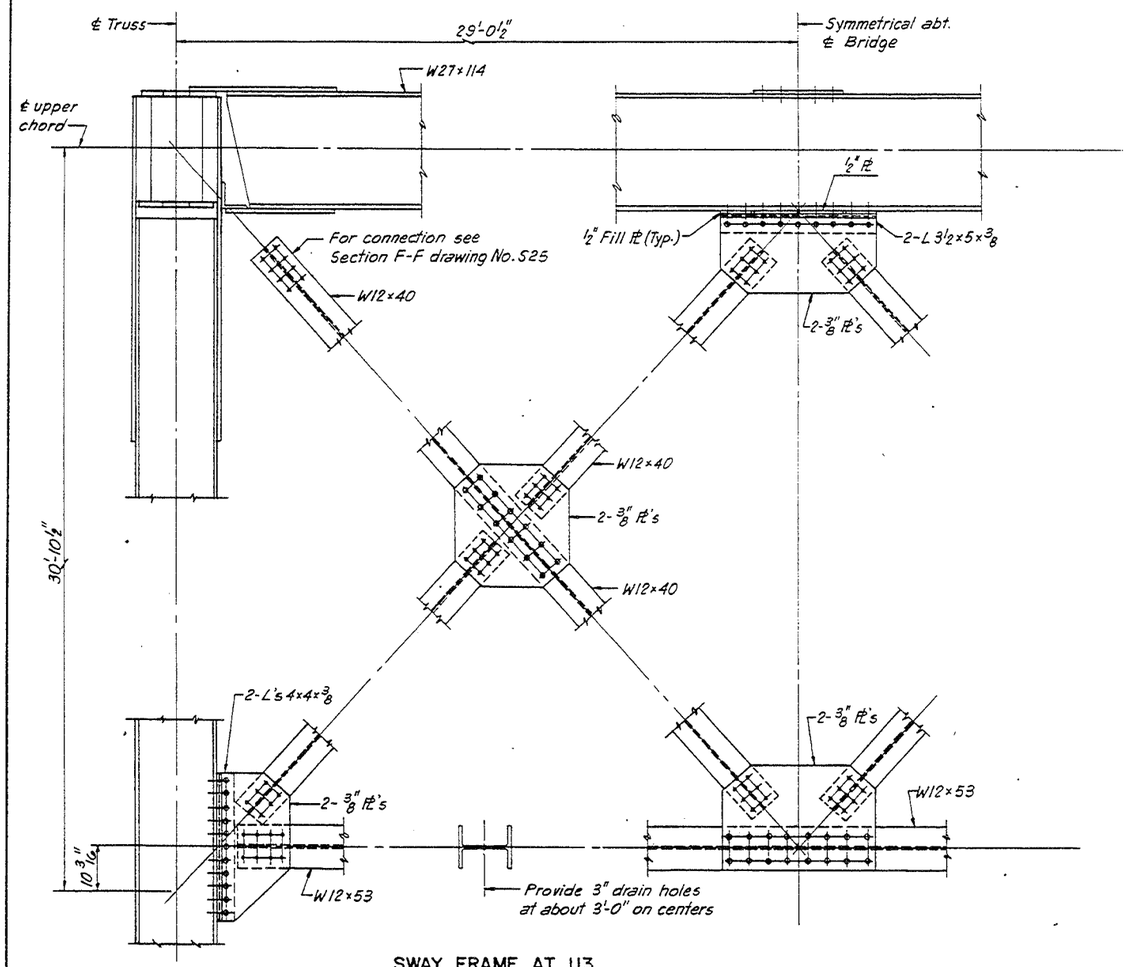


SWAY FRAME AT U3

SWAY FRAME AT U5, U5' AND U3' SIMILAR

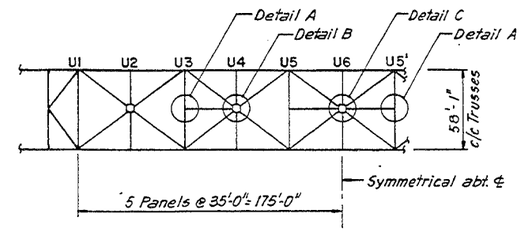


PLAN OF TOP LATERALS

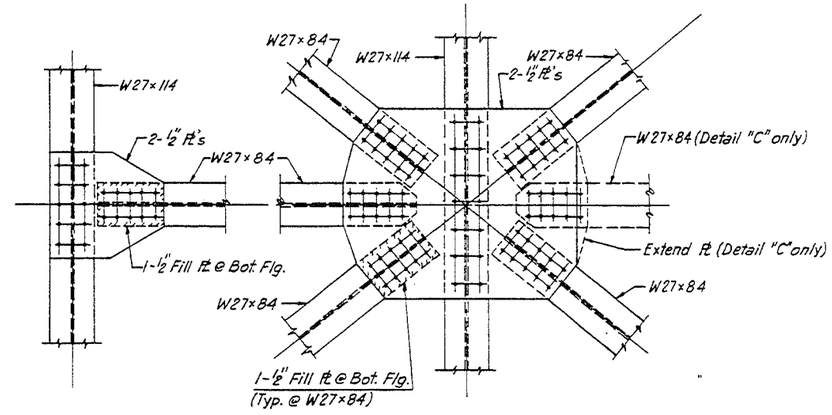


DETAIL A

DETAIL B

DETAIL "C" (SIMILAR U.N.)

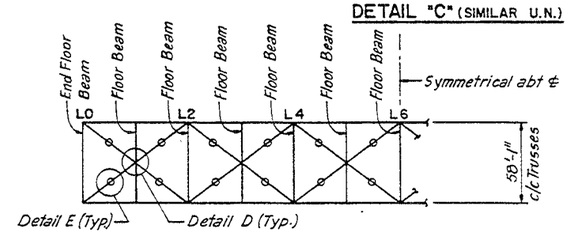


PLAN OF BOTTOM LATERALS

NOTE:

1. Work this Drawing with Sheet No's S21 thru S25.
2. For Weld Requirements see Sheet No. S22 U.N.
3. For Bolt Spacing see Sheet No. S22.

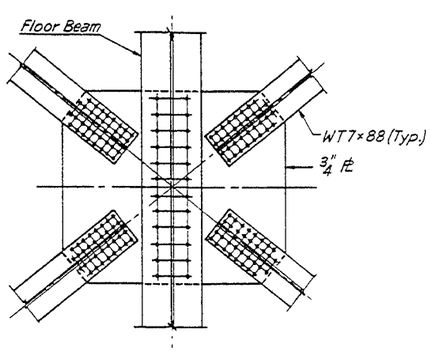


DETAIL D

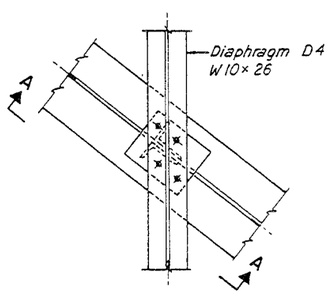


DETAIL E

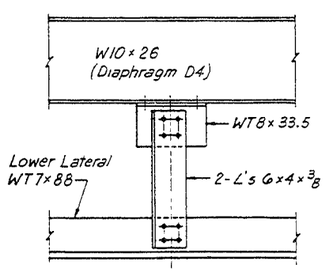


SECTION A-A

STATE OF ILLINOIS
DEPARTMENT OF TRANSPORTATION
TRUSS-SWAY FRAMES & BRACING
F.A.I.-94 OVER LITTLE CALUMET RIVER
COOK COUNTY

STA. 172 + 54.39 — SN 016-0158 (S. BOUND) SN 016-0159 (N. BOUND)

SCALE — DRAWN BY P.G.

DATE NOV. 199: — CHECKED BY J.M.

| F.A. ROUTE | SECTION | COUNTY | TOTAL SHEETS | SHEET NO. |
|---|---|---|---|---|
| I-94 | * | COOK | 318 | 199 |

* 42(VB-10,12,HB-14,B-11) & 0707.1 HB(R-3)90

SHT. S27 OF S54

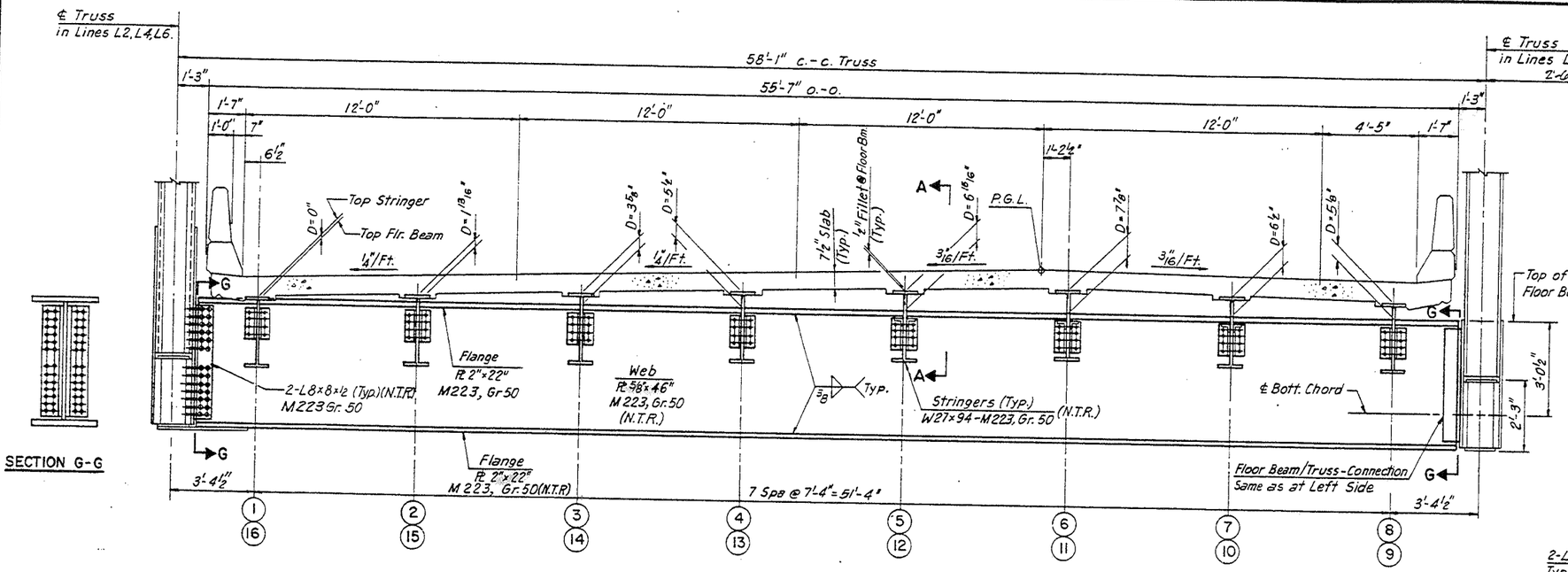


SECTION G-G

INTERMEDIATE FLOOR BEAM - "A"

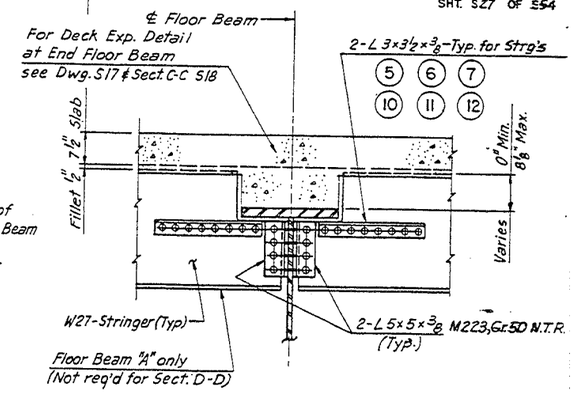


SECTION A-A
SECTION D-D

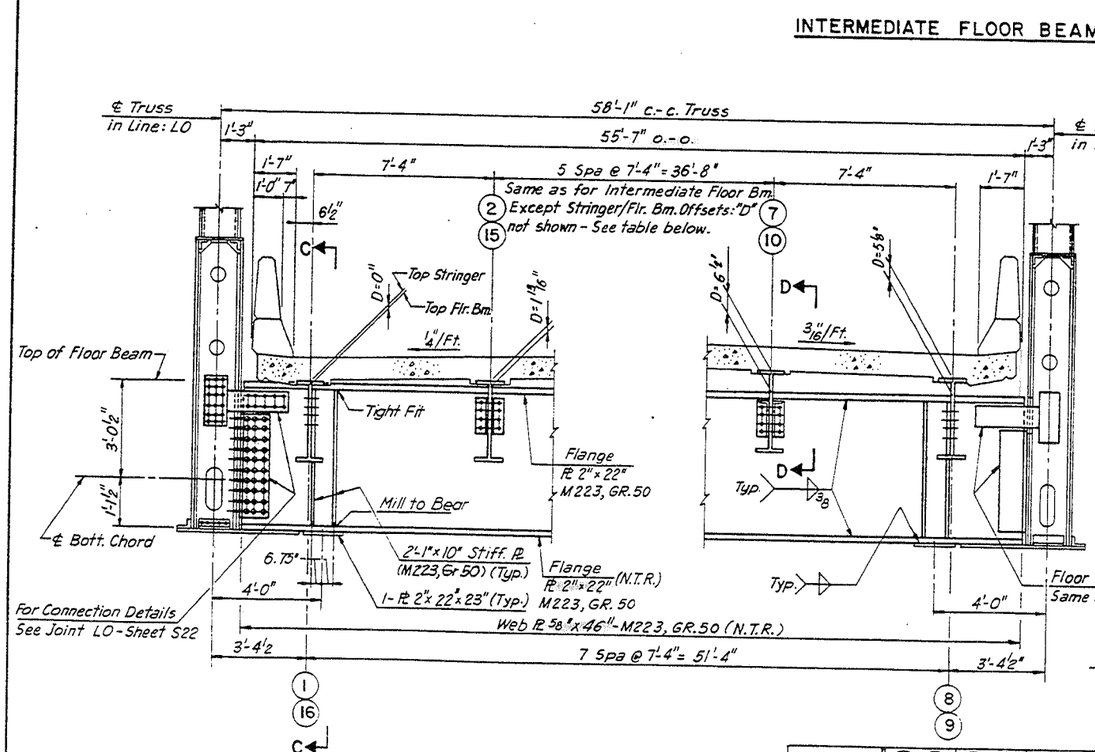


END FLOOR BEAM

| Stringer # | 3 14 | 4 13 | 5 12 | 6 11 |
|---|---|---|---|---|
| Offset "D" | 3 5/8" | 5 1/2" | 6 5/16" | 7 7/8" |

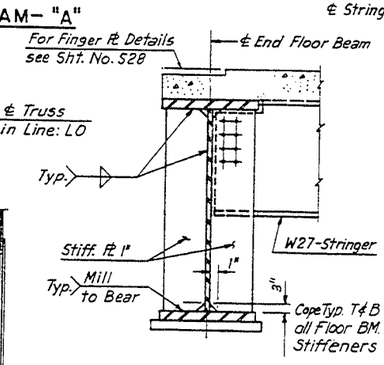


SECTION C-C

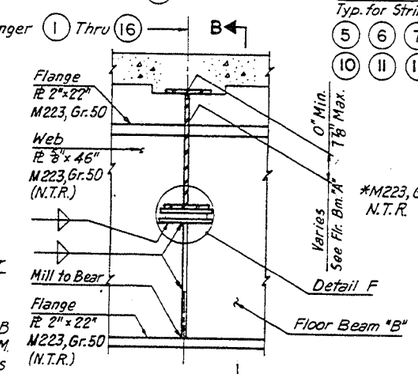


INTERMEDIATE FLOOR BEAM - "B"
(Dimensions not Shown, See Floor Bm. "A")

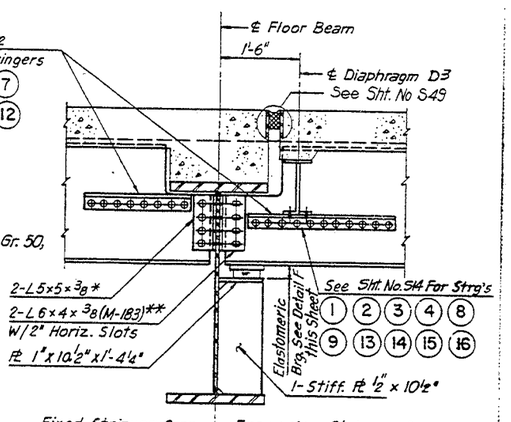


SECTION B-B

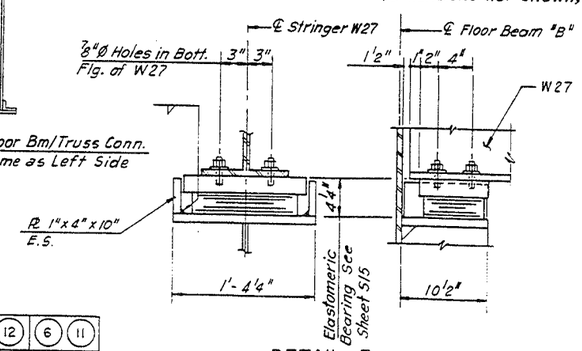


DETAIL F

** Provide double nuts for connection to stringer 1-hex. nut, hand tighten & 1-lock nut

Note:
Provide two washers over all slotted holes for stringer connections.

NOTES:
For Fillet weld sizes not shown. See Sht. No. S22. N.T.R. Indicates Supplemental Requirements for Notch Toughness Zone-2. Work this Drawing with Sht. Nos. S22 & S23. For Diaphragm details See Sht. No. S14. For Weld Requirements see Sht. No. S22 U.N. For Bolt Spacing see Sht. No. S22.

STATE OF ILLINOIS
DEPARTMENT OF TRANSPORTATION
TRUSS FLOOR BEAMS & STRINGER CONN.
F.A.I.-94 OVER LITTLE CALUMET RIVER
COOK COUNTY
STA. 172+54.39
SN 016-0158 (S. BOUND)
SN 016-0159 (N. BOUND)
SCALE
DRAWN BY P.G.
DATE NOV. 1991
CHECKED BY J.M.

| F.A. ROUTE | SECTION | COUNTY | TOTAL SHEETS | SHEET NO. |
|---|---|---|---|---|
| I-94 | * | COOK | 318 | 200 |

STA. TO STA.

FED. ROAD DIST. NO. 7 | ILLINOIS | FEDERAL AID PROJECT

* 42(VB-10,12,HB-14,B-11) & 0707.1 HB(R-9)90

SHT. S28 OF S54

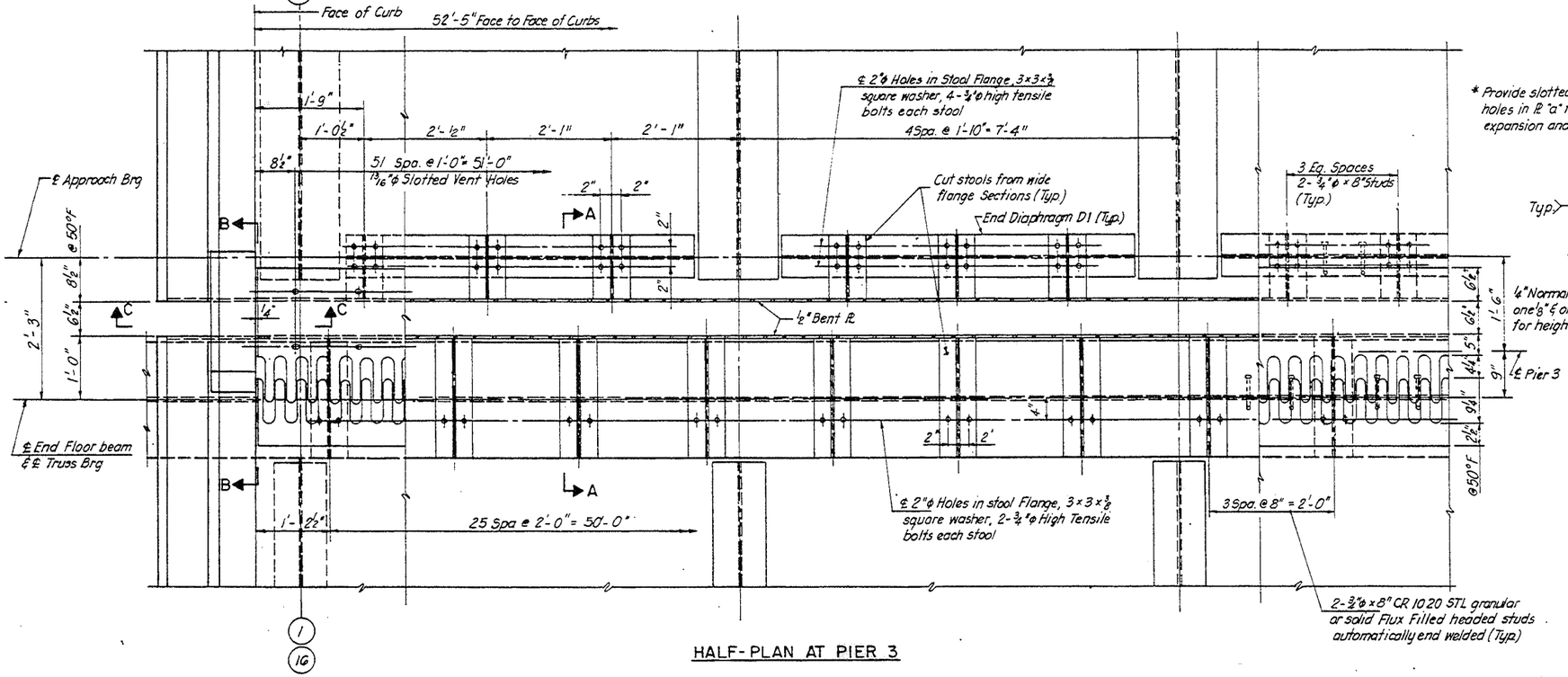


HALF-PLAN AT PIER 3

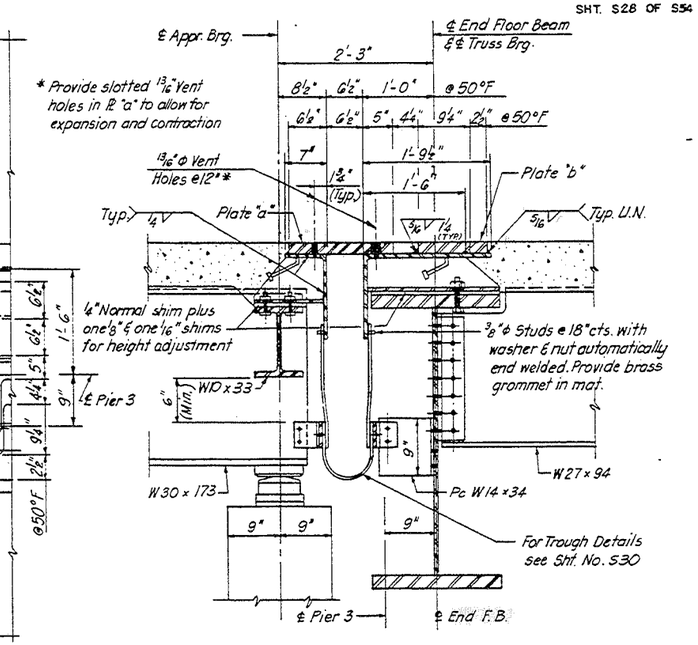


SECTION A-A

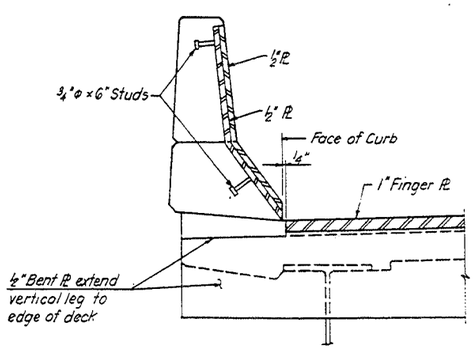


SECTION C-C

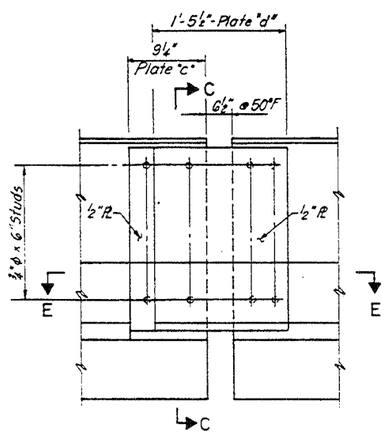


SECTION B-B

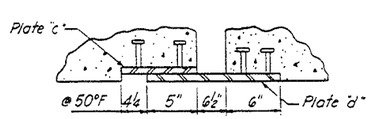


SECTION E-E

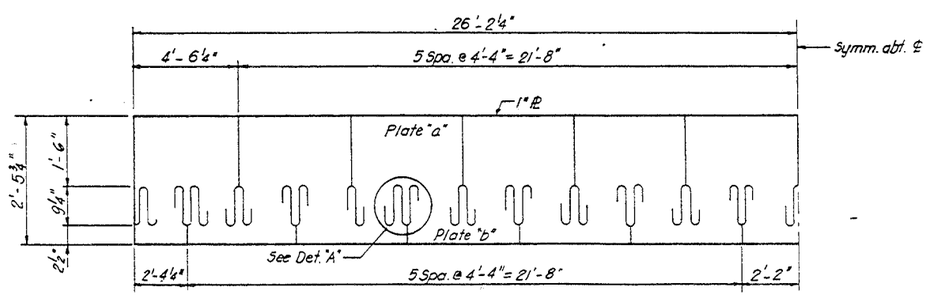


FINGER PLATE CUTTING DIAGRAM

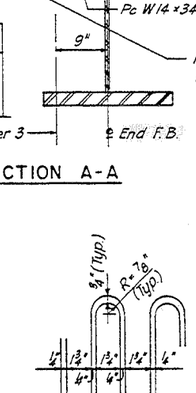


DETAIL "A"

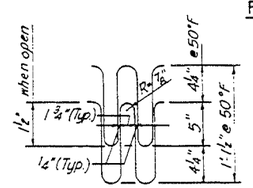


AT NORMAL TEMPERATURE

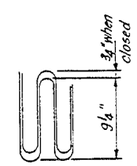


AT CLOSED POSITION

FINGER DETAILS

Temperature Range = -30°F to 130°F with 50°F = Normal
Coeff. of Linear Expansion = .0000065 ft. per ft. per degree

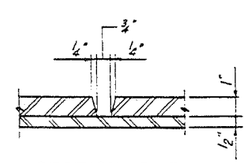


SECTION D-D

STATE OF ILLINOIS
DEPARTMENT OF TRANSPORTATION
FINGER PLATE DETAILS
F.A.I.-94 OVER LITTLE CALUMET RIVER
COOK COUNTY

STA. 172+54.39 | SN 016-0158 (S. BOUND) SN 016-0159 (N. BOUND)

SCALE | DRAWN BY S.P.

DATE NOV. 1991 | CHECKED BY J.M.

* 42(VB-10,12,HB-14,B-11) & 0707.1 HB(R-8.)90

| ROUTE | SECTION | COUNTY | TOTAL SHEETS | SHEET NO. |
|---|---|---|---|---|
| I-94 | * | COOK | 318 | 201 |
| STA. | | TO STA. | | |
| FED. ROAD DIST. NO. 7 | ILLINOIS | FEDERAL AID PROJECT | | |

SHT. S29 OF S54

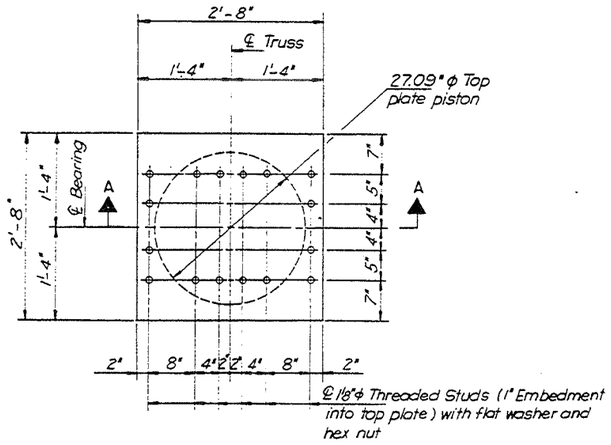


TOP PLATE PLAN

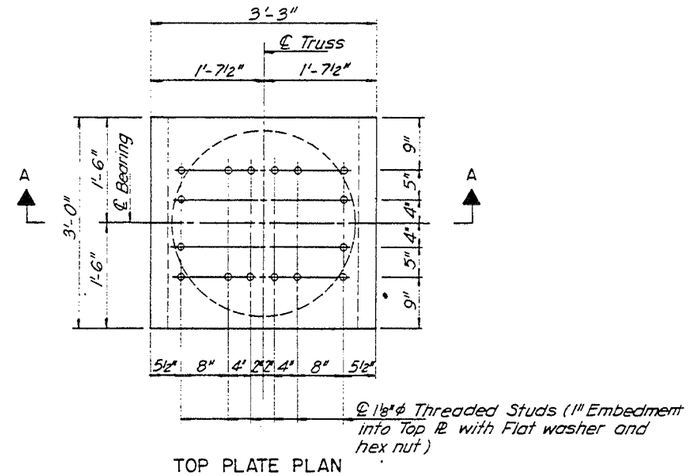


TOP PLATE PLAN

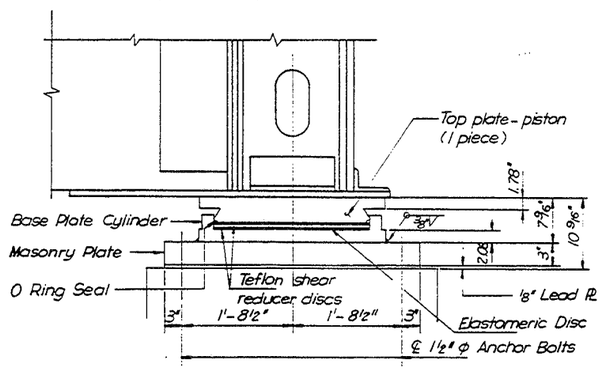


SECTION A-A

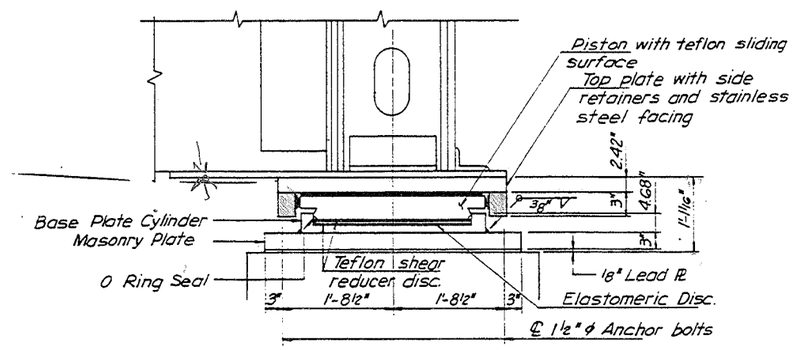


SECTION A-A

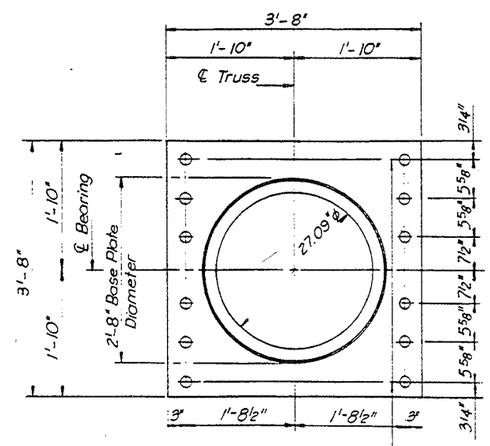


MASONRY PLATE PLAN

℄ 1¾" ϕ Holes for 1½" ϕ x 2'-0" Anchor Bolts with 3½" x 3½" x 5/16" PL washer under nut (5⅜" Projection)

PIER 4 FIXED BEARING

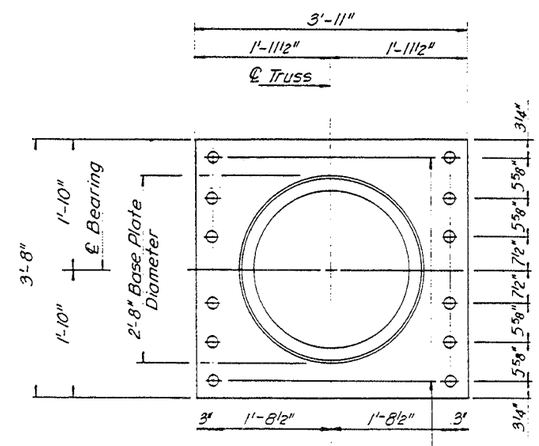


MASONRY PLATE PLAN

℄ 1¾" ϕ Holes for 1½" ϕ x 2'-0" Anchor Bolts with 3½" x 3½" x 5/16" PL washer under nut (5⅜" Projection)

PIER 3 EXPANSION BEARING

STATE OF ILLINOIS
DEPARTMENT OF TRANSPORTATION
TRUSS SPAN FLOATING BEARINGS
F.A.I.-94 OVER LITTLE CALUMET RIVER
COOK COUNTY

STA. 172+54.39 — SN 016-0158 (S. BOUND) / SN 016-0159 (N. BOUND)

SCALE — DRAWN BY MT & DM

DATE NOV. 1991 — CHECKED BY L.M.

Cook 42(VB-10,12,HB-14,B-1) & Etc. Sheets 201 thru 318

* 42(VB-10,12,HB-14,B-11) & 0707.1 HB(R-3)90

| F.A. ROUTE | SECTION | COUNTY | TOTAL SHEETS | SHEET NO. |
|---|---|---|---|---|
| I-94 | * | COOK | 318 | 203 |
| STA. | | TO STA. | | |
| FED. ROAD DIST. NO. 7 | ILLINOIS | FEDERAL AID PROJECT | | |

SHT. 531 OF 554

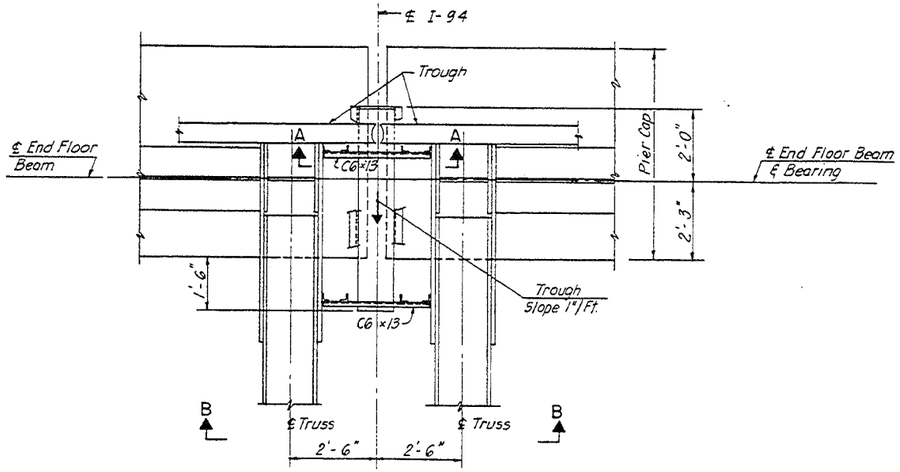


PLAN

DETAIL "D"

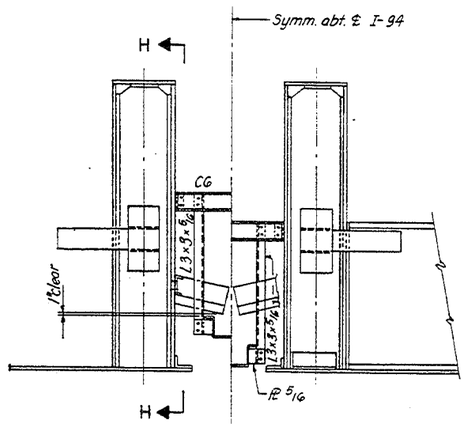


SECTION A-A

SECTION B-B

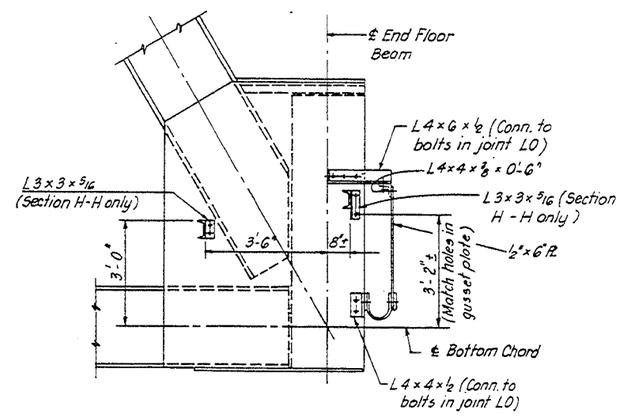


SECTION H-H

SECTION G-G (OPPOSITE HAND & SIMILAR U.N.)

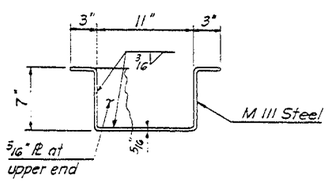


GUTTER DETAIL

(N.T.S.)

STATE OF ILLINOIS
DEPARTMENT OF TRANSPORTATION
TRUSS SPAN TROUGH DETAILS-II
F.A.I.-94 OVER LITTLE CALUMET RIVER
COOK COUNTY

STA. 172+54.39 SN 016-0158 (S. BOUND)
SN 016-0159 (N. BOUND)

SCALE DRAWN BY S.P.

DATE NOV. 1991 CHECKED BY J.M.

| F.A. ROUTE | SECTION | COUNTY | TOTAL SHEETS | SHEET NO |
|---|---|---|---|---|
| I-94 | | COOK | 318 | 204 |
| STA. | | TO STA. | | |
| FED. ROAD DIST. NO. 7 | ILLINOIS | FEDERAL AID PROJECT | | |

SHT. S32 OF S56

* 42(VB-10,12,HB-14,B-11) & 0707.1 HB(R-3 )90

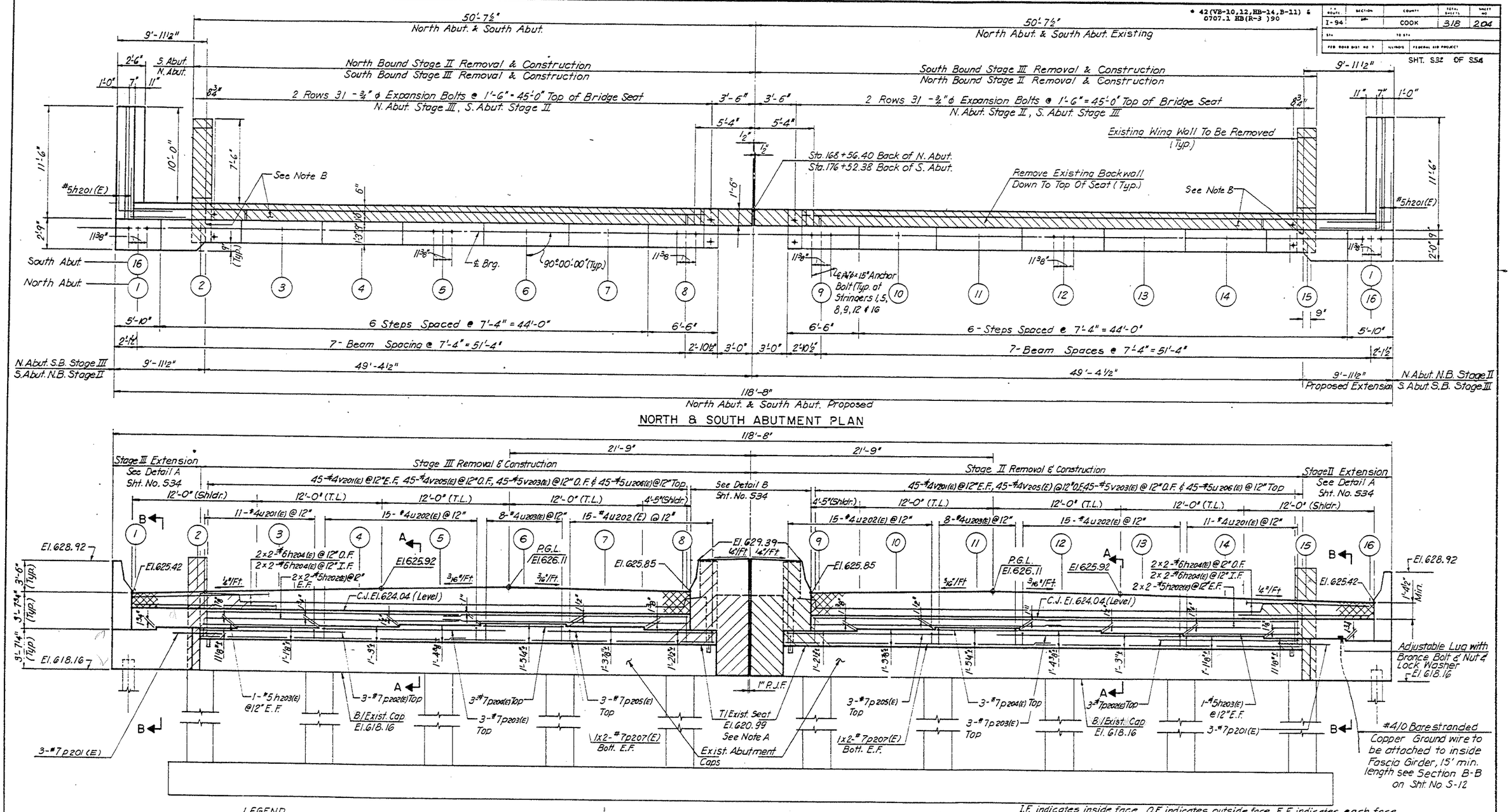


NORTH & SOUTH ABUTMENT PLAN




ELEVATION NORTH ABUTMENT

( Looking North )

I.F. indicates inside face, O.F. indicates outside face, E.F. indicates each face

TABLE OF SEAT ELEVATIONS

| BEAM NO. | 1 | 2 | 3 | 4 | 5 | 6 | 7 | 8 | 9 | 10 | 11 | 12 | 13 | 14 | 15 | 16 |
|---|---|---|---|---|---|---|---|---|---|---|---|---|---|---|---|---|
| N. ABUTMENT | 621.77 | 621.92 | 622.08 | 622.23 | 622.35 | 622.43 | 622.31 | 622.20 | 622.20 | 622.31 | 622.43 | 622.35 | 622.23 | 622.08 | 621.92 | 621.77 |

PILE DATA

Type: 14"ϕ Metal Shell w/¼" walls
Est. Length 64' N. Abut., 57' S. Abut.
(Tip El. 555.16) (Tip El. 558.63)
No. Reqd 6 Each Abutment (Includes Test Pile)
Test Pile 1 Each Abutment
Capacity: 50 Ton

LEGEND

Remove existing structure

Hatched Area to be poured after superstructure falsework has been removed. Quantity included with Class X Concrete Superstructure.

Note A: Remove all deteriorated concrete, thoroughly clean and roughen top of existing cap

Note B: Existing reinforcement to be cleaned and incorporated into new concrete. Cut or straighten bars as required to fit the shape of Proposed Construction.

NOTES:

For Sections A-A & B-B see Sht. No. S33
For Wingwall Details & Bill of Materials see Sht. No. S35
Bars indicated thus 3x2-#5 etc., indicates 3 lines of bars with 2 lengths per line.
For Anchor Bolt Details see Sht. No. S52

STATE OF ILLINOIS
DEPARTMENT OF TRANSPORTATION
NORTH & SOUTH ABUTMENT DETAILS-I
F.A.I.-94 OVER LITTLE CALUMET RIVER
COOK COUNTY

STA. 172+54.39
SN 016-0158 (S.BOUND)
SN 016-0159 (N.BOUND)

SCALE
DRAWN BY B. A.
DATE NOV. 1991
CHECKED BY J. M.

* 42(VB-10,12,HB-14,B-11) & 0707.1 HB(R-8 )90

| F.A. ROUTE | SECTION | COUNTY | TOTAL SHEETS | SHEET NO. |
|---|---|---|---|---|
| I-94 | * | COOK | 318 | 202 |
| STA. | | TO STA. | | |
| FED. ROAD DIST. NO. 7 | ILLINOIS | FEDERAL AID PROJECT | | |

SHT. S30 OF S54

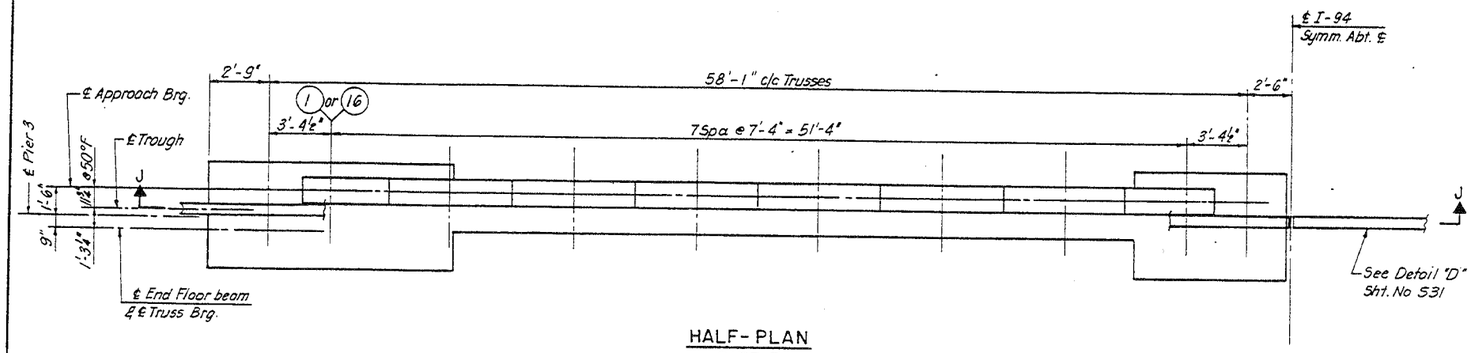


HALF-PLAN
PIER 3

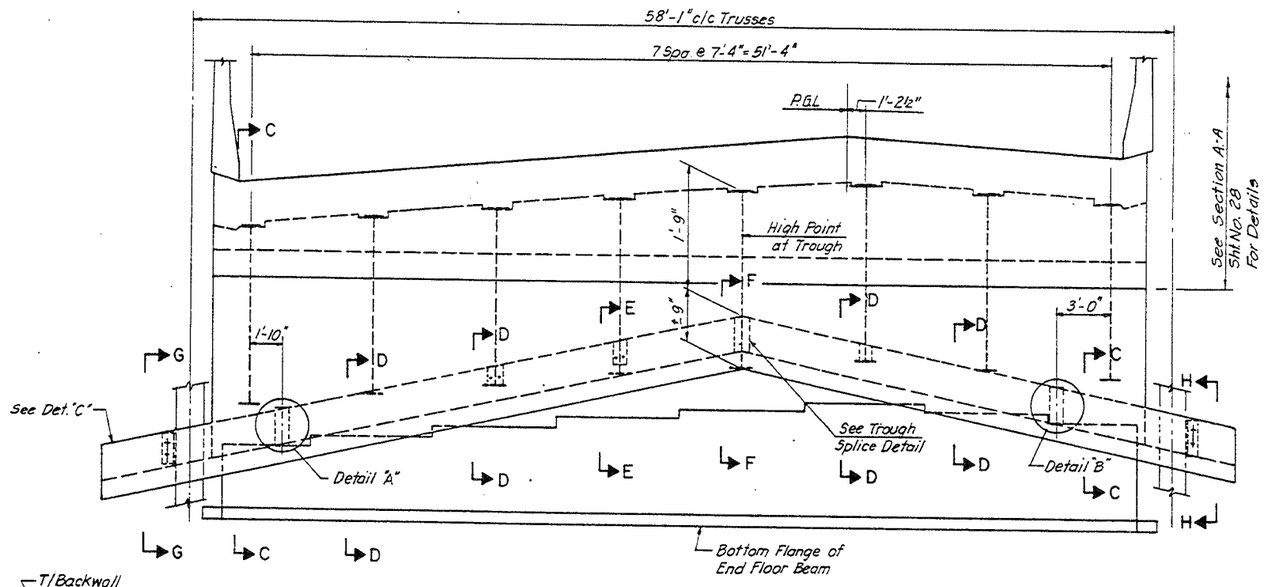


SECTION J-J

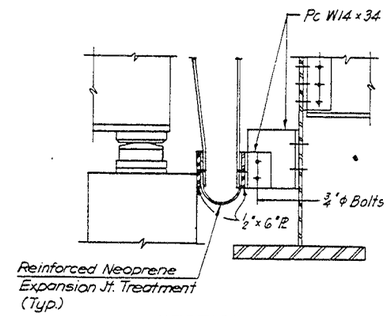


SECTION C-C

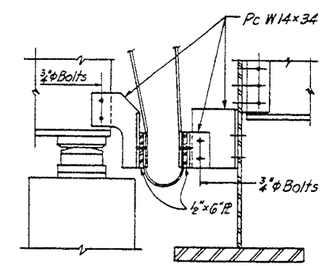


SECTION D-D

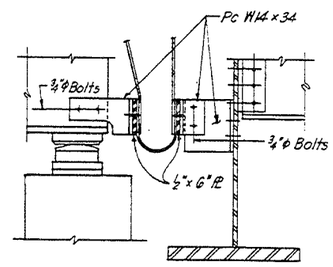


SECTION E-E

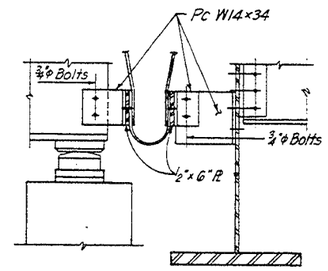


SECTION F-F

Notes:
For Sections G-G & H-H see Sht. No. S31
Trough Support Brackets, Nuts and Bolts shall be Hot Dipped Galvanized.

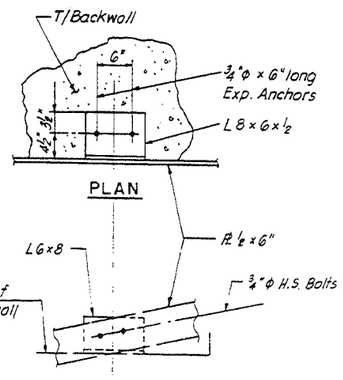


PLAN

DETAIL "A"
DETAIL "B" (OPPOSITE HAND)

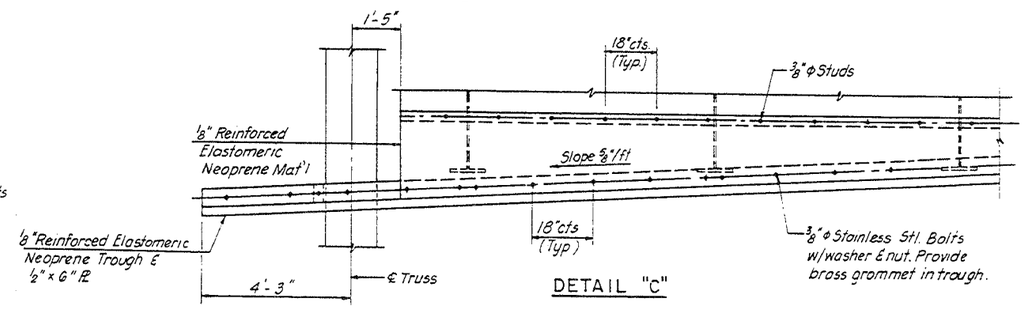


DETAIL "C"

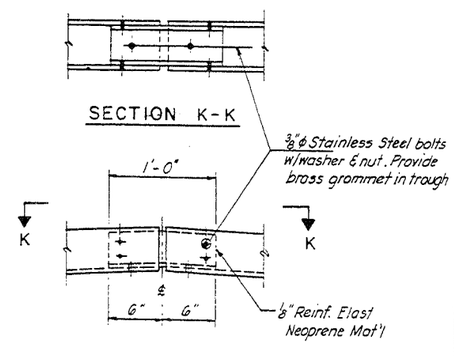


TROUGH SPLICE DETAIL

BILL OF MATERIAL

| ITEM | UNIT | CONSTR. STAGES II | CONSTR. STAGES III |
|---|---|---|---|
| Reinforced Neoprene Expansion Joint Treatment | L.F. | 64 | 64 |
| | | | |
| | | | |

STATE OF ILLINOIS
DEPARTMENT OF TRANSPORTATION
TRUSS SPAN TROUGH DETAILS - I
F.A.I.-94 OVER LITTLE CALUMET RIVER
COOK COUNTY

STA. 172 + 54.39
SN 016-0158 (S. BOUND)
SN 016-0159 (N. BOUND)

SCALE
DRAWN BY S.P.
DATE NOV. 1991
CHECKED BY J.M.

| F.A. ROUTE | SECTION | COUNTY | TOTAL SHEETS | SHEET NO. |
|---|---|---|---|---|
| I-94 | * | COOK | 318 | 205 |
| STA. | TO STA. | | | |
| FED. ROAD DIST. NO. 7 | ILLINOIS | FEDERAL AID PROJECT | | |

SHT. S33 OF S34

* 42(VB-10,12,HB-14,B-11) & 0707.1 HB(R-3)90

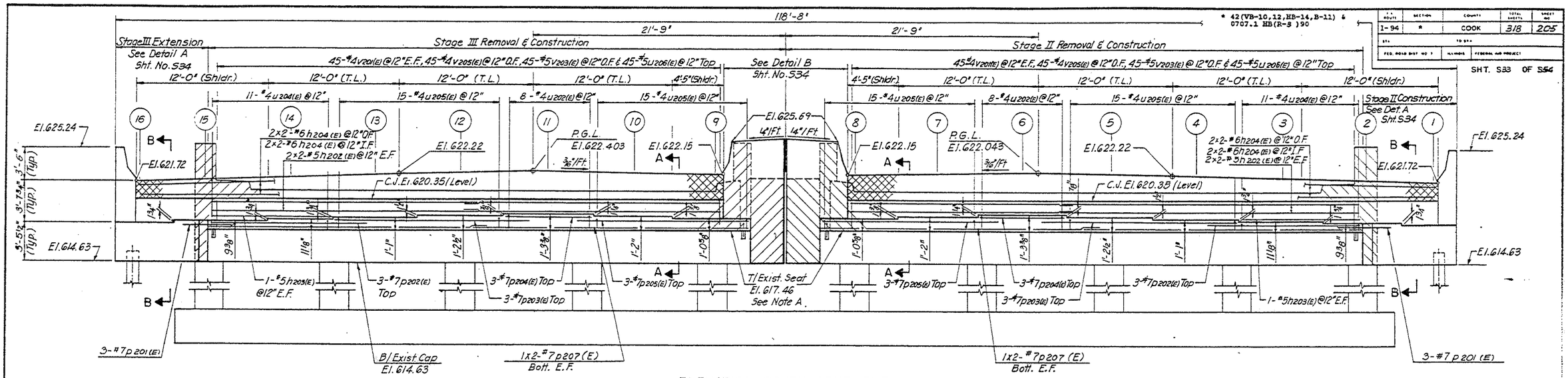


ELEVATION SOUTH ABUTMENT
( Looking South )

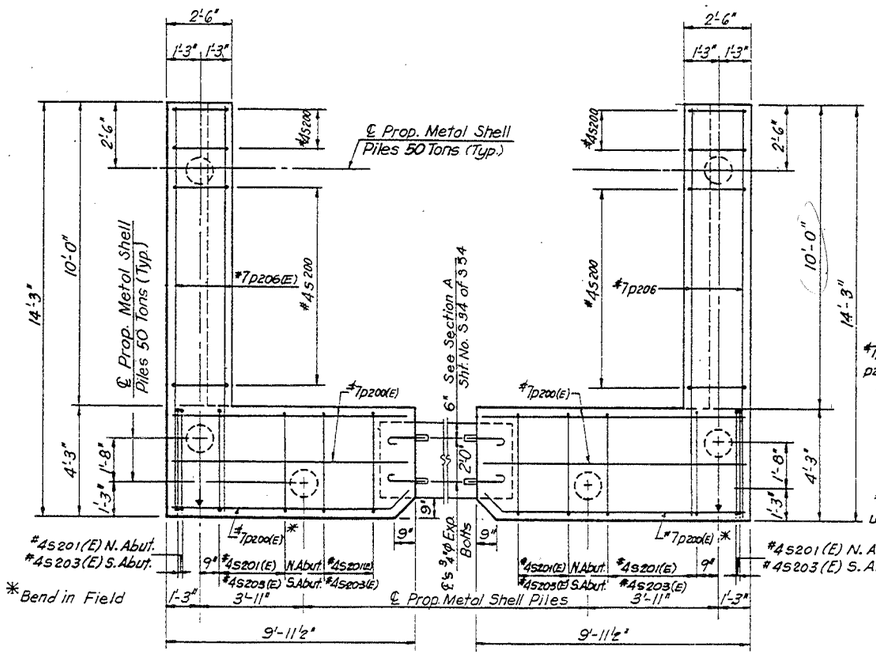


NORTH ABUTMENT S.B. & SOUTH ABUTMENT N.B.

NORTH ABUTMENT N.B. & SOUTH ABUTMENT S.B.

FOOTING EXTENSION PLAN

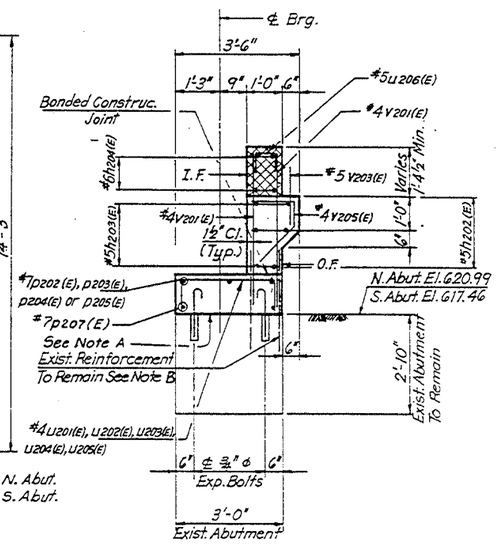


SECTION A-A

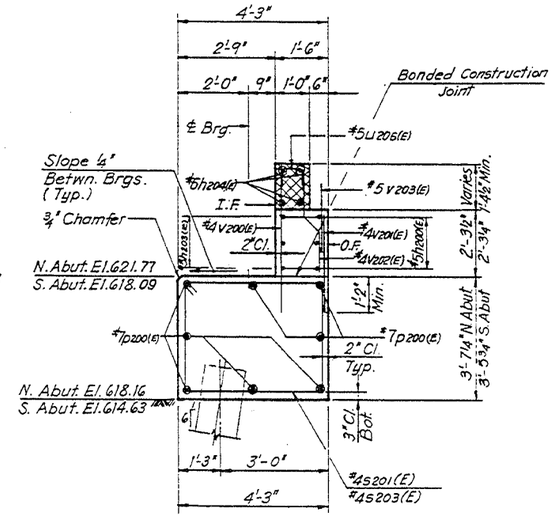


SECTION B-B

NOTES:

For Top Plan, Legend & Notes A & B see Sht. No. S32
For Wingwall Details & Bill of Materials see Sht. No. S35
Bars indicated thus 3x2-#5 etc., indicates 3 lines of bars with 2 lengths per line.
I.F. indicates Inside Face
O.F. indicates Outside Face
E.F. indicates Each Face

TABLE OF SEAT ELEVATIONS

| BEAM NO. | 1 | 2 | 3 | 4 | 5 | 6 | 7 | 8 | 9 | 10 | 11 | 12 | 13 | 14 | 15 | 16 |
|---|---|---|---|---|---|---|---|---|---|---|---|---|---|---|---|---|
| S. ABUTMENT | 618.09 | 618.24 | 618.39 | 618.54 | 618.67 | 618.74 | 618.63 | 618.51 | 618.51 | 618.63 | 618.74 | 618.67 | 618.54 | 618.39 | 618.24 | 618.09 |

STATE OF ILLINOIS
DEPARTMENT OF TRANSPORTATION
NORTH & SOUTH ABUTMENT-DETAILS-II
F.A.I.-94 OVER LITTLE CALUMET RIVER
COOK COUNTY

STA. 172+54.39
SN 016-0158 (S.BOUND)
SN 016-0159 (N.BOUND)

SCALE
DRAWN BY B.A.
DATE NOV. 1991
CHECKED BY J.M.

197

| F.A. ROUTE | SECTION | COUNTY | TOTAL SHEETS | SHEET NO |
|---|---|---|---|---|
| I-94 | * | COOK | 318 | 206 |
| STA. | TO STA. | | | |
| FED. ROAD DIST. NO. 1 | ILLINOIS | FEDERAL AID PROJECT | | |

* 42(VB-10,12,HB-14,B-11) & 0707.1 HB(R-3)90

SHT. S34 OF S54

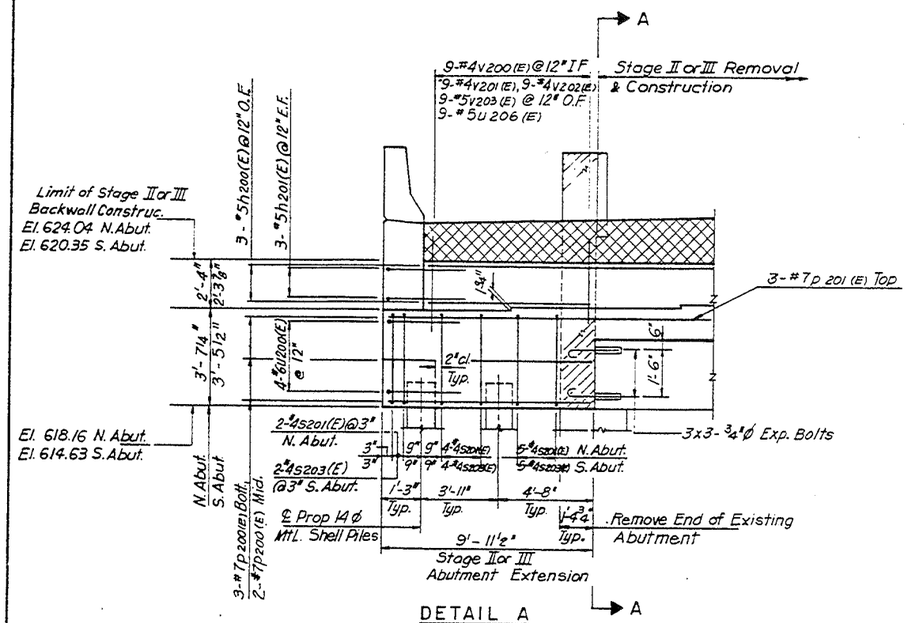


DETAIL A

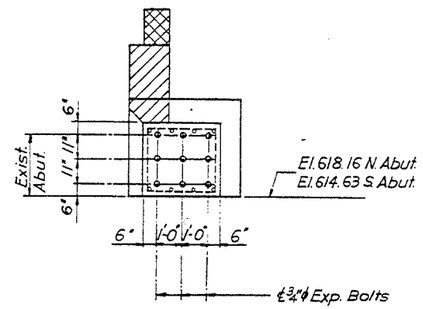


SECTION A-A

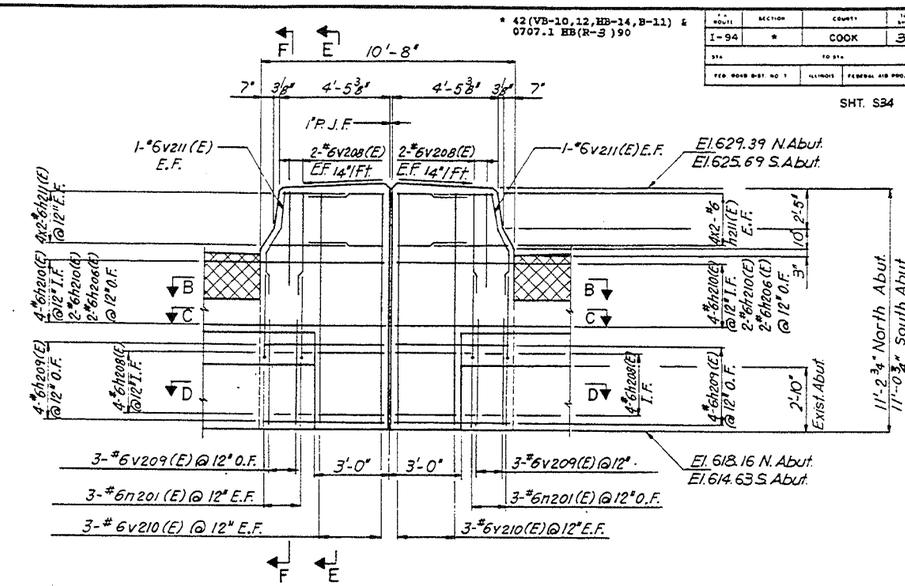


DETAIL B

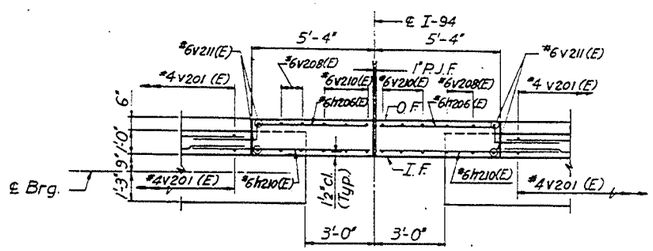


SECTION B-B

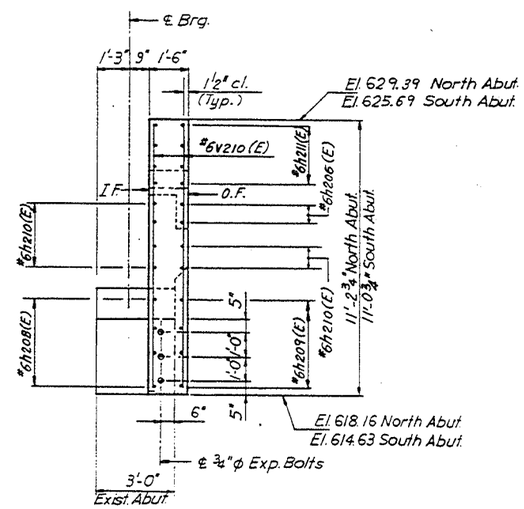


SECTION E-E

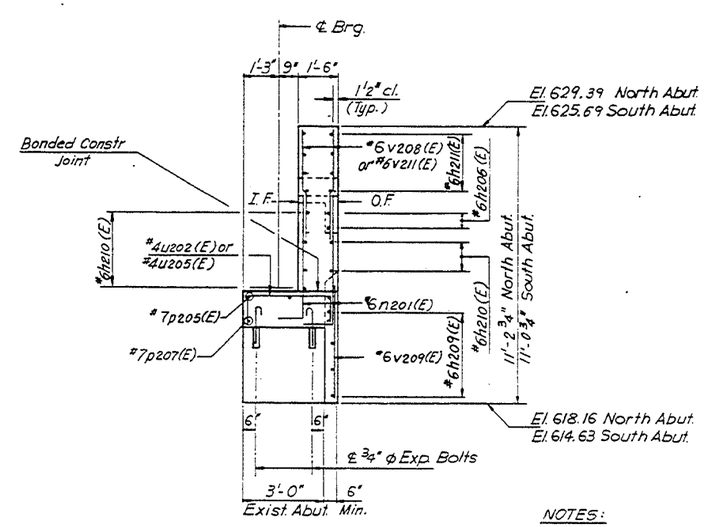


SECTION F-F

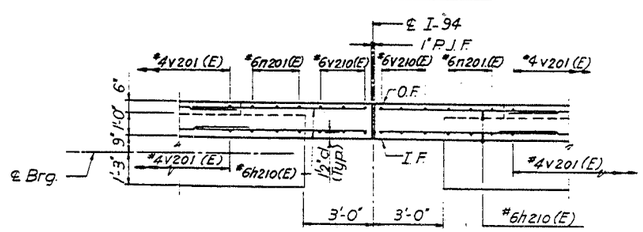


SECTION C-C

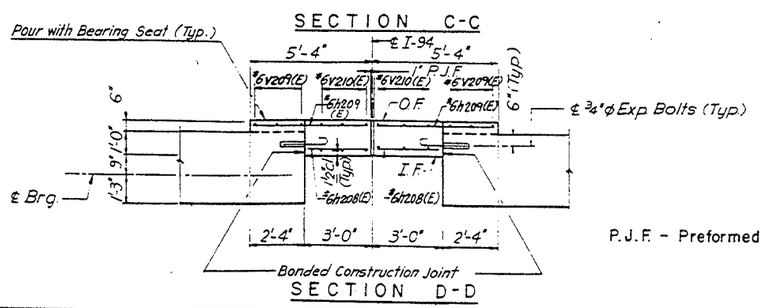


SECTION D-D

P.J.F. - Preformed Joint Filler

NOTES:

I.F. indicates Inside Face
O.F. indicates Outside Face
E.F. indicates Each Face

STATE OF ILLINOIS
DEPARTMENT OF TRANSPORTATION
NORTH & SOUTH ABUTMENT DETAILS III
FAI-94 OVER LITTLE CALUMET RIVER
COOK COUNTY

STA. 172+54.39

SN 016-0158 (S. BOUND)
SN 016-0159 (N. BOUND)

SCALE

DRAWN BY M.T.

DATE NOV. 1991

CHECKED BY J.M.

196

* 42(VB-10,12,HB-14,B-11) &
0707.1 HB(R-3)90

| F.A. ROUTE | SECTION | COUNTY | TOTAL SHEETS | SHEET NO. |
|---|---|---|---|---|
| I-94 | B | COOK | 318 | 207 |
| STA. | TO STA. | | | |
| FED. ROAD DIST. NO. 1 | ILLINOIS | FEDERAL AID PROJECT | | |

SHT. S35 OF S54

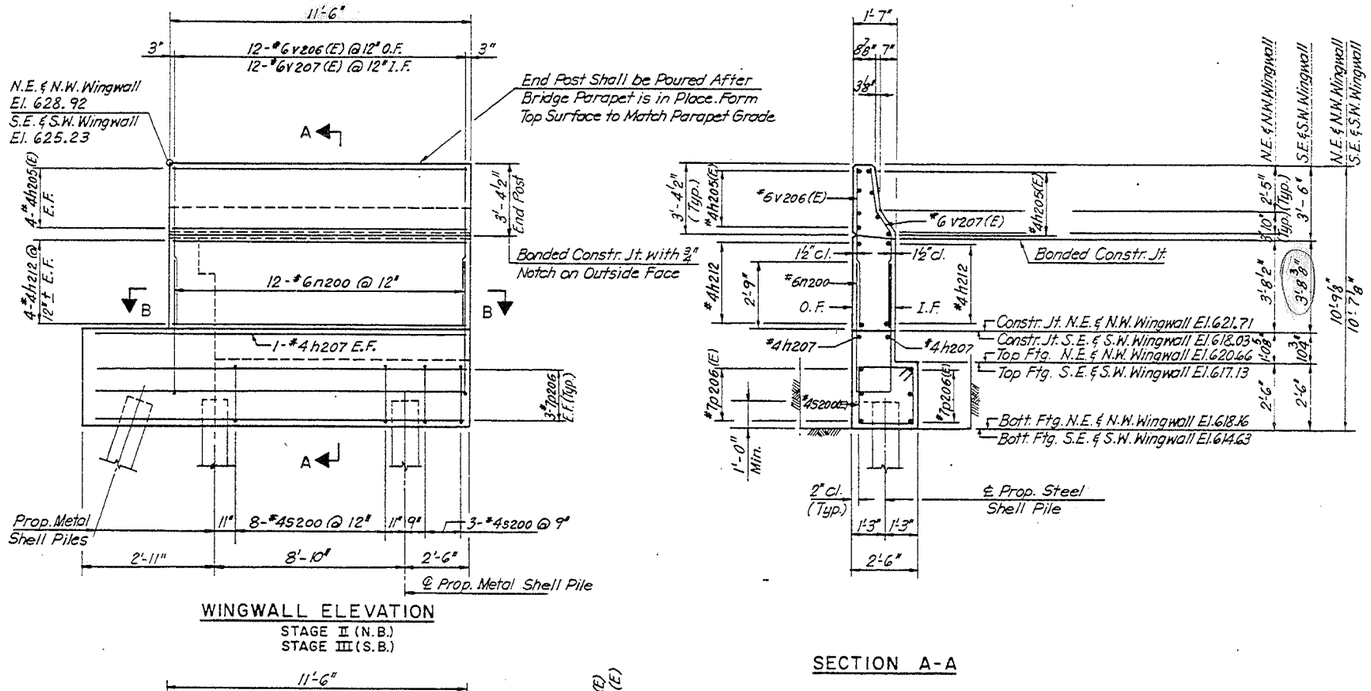


WINGWALL ELEVATION
STAGE II (N.B.)
STAGE III (S.B.)

SECTION A-A

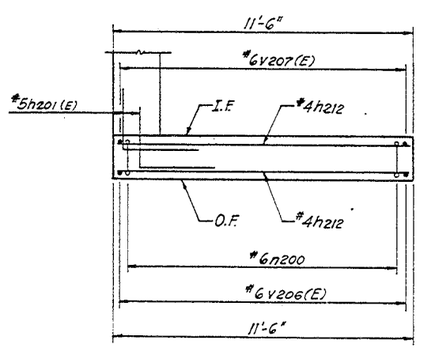


SECTION B-B

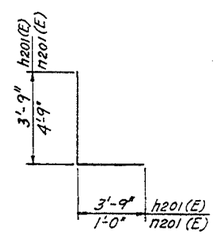


BARS h201(E) & n201(E)

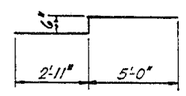


BAR h206(E)

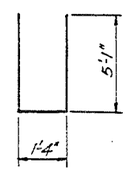


BAR n200

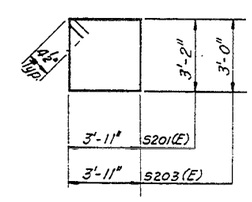


BARS s201(E) AND s203(E)

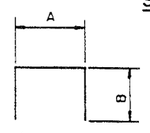


| BAR | A | B |
|---|---|---|
| u200(E) | 3'-11" | 2'-7" |
| u201(E) | 2'-8" | 7" |
| u202(E) | 2'-8" | 11" |
| u203(E) | 2'-8" | 1'-1" |
| u204(E) | 2'-8" | 5" |
| u205(E) | 2'-8" | 9" |
| u206(E) | 9" | 7" |

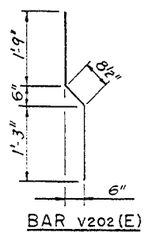


BAR v202(E)

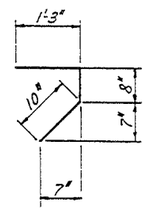


BAR v205(E)

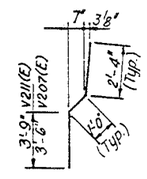


BARS v207(E) & v211(E)

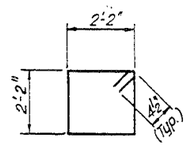


BAR s200

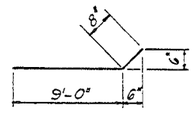


BAR p201(E)

| ITEM | UNIT | TOTAL NO. N. ABUT. | TOTAL NO. S. ABUT. | CONSTRUCTION STAGES | II | III |
|---|---|---|---|---|---|---|
| Structure Excavation | C.Y. | 124.4 | 124.4 | | 124.4 | 124.4 |
| Porous Granular Embankment | C.Y. | 64.4 | 64.4 | | 64.4 | 64.4 |
| Concrete Removal | C.Y. | 27.9 | 27.9 | | 27.9 | 27.9 |
| Class X Concrete | C.Y. | 5.5 | 52.6 | | 53.8 | 53.8 |
| Furnishing Metal Pile Shells | L.F. | 256 | 228 | | 242 | 242 |
| Driving & Filling Shells | L.F. | 256 | 228 | | 242 | 242 |
| Test Piles, Metal Shell | Each | 2 | 2 | | 2 | 2 |
| Expansion Bolts, ¾ Φ | Each | 142 | 142 | | 142 | 142 |
| Reinforcement Bars Epoxy Coated | Lbs. | 7,340 | 7320 | | 7330 | 7330 |

NOTES:
I.F. indicates Inside Face
O.F. indicates Outside Face
E.F. indicates Each Face

BILL OF MATERIAL

| BAR | TOTAL NO. N. ABUT. | TOTAL NO. S. ABUT. | CONSTRUCTION STAGES | II | III | SIZE | LENGTH | SHAPE |
|---|---|---|---|---|---|---|---|---|
| h200(E) | 12 | 12 | | 12 | 12 | #5 | 9'-0" | — |
| h201(E) | 12 | 12 | | 12 | 12 | #5 | 7'-6" | L |
| h202(E) | 16 | 16 | | 16 | 16 | #5 | 22'-11" | — |
| h203(E) | 4 | 4 | | 4 | 4 | #5 | 28'-0" | — |
| h204(E) | 16 | 16 | | 16 | 16 | #6 | 26'-4" | — |
| h205(E) | 16 | 16 | | 16 | 16 | #4 | 11'-2" | — |
| h206(E) | 4 | 4 | | 4 | 4 | #6 | 8'-5" | ⌋ |
| h207(E) | 4 | 4 | | 4 | 4 | #4 | 14'-0" | — |
| h208(E) | 8 | 8 | | 8 | 8 | #6 | 2'-8" | — |
| h209(E) | 8 | 8 | | 8 | 8 | #6 | 5'-0" | — |
| h210(E) | 12 | 12 | | 12 | 12 | #6 | 7'-11" | — |
| h211(E) | 32 | 32 | | 32 | 32 | #6 | 3'-10" | — |
| h212(E) | 16 | 16 | | 16 | 16 | #4 | 11'-2" | — |
| | | | | | | | | |
| n200(E) | 24 | 24 | | 24 | 24 | #6 | 11'-6" | L L |
| n201(E) | 12 | 12 | | 12 | 12 | #6 | 5'-9" | L |
| | | | | | | | | |
| | | | | | | | | |
| p200(E) | 16 | 16 | | 16 | 16 | #7 | 9'-8" | — |
| p201(E) | 6 | 6 | | 6 | 6 | #7 | 9'-8" | ⌋ |
| p202(E) | 6 | 6 | | 6 | 6 | #7 | 15'-0" | — |
| p203(E) | 6 | 6 | | 6 | 6 | #7 | 17'-3" | — |
| p204(E) | 6 | 6 | | 6 | 6 | #7 | 6'-8" | — |
| p205(E) | 6 | 6 | | 6 | 6 | #7 | 16'-9" | — |
| p206(E) | 12 | 12 | | 12 | 12 | #7 | 14'-0" | — |
| p207(E) | 8 | 8 | | 8 | 8 | #7 | 24'-7" | — |
| s200(E) | 22 | 22 | | 22 | 22 | #4 | 9'-5" | ◻ |
| s201(E) | 22 | — | | 11 | 11 | #4 | 14'-11" | ◻ |
| | | | | | | | | |
| s203(E) | — | 22 | | 11 | 11 | #4 | 14'-7" | ◻ |
| | | | | | | | | |
| | | | | | | | | |
| u200(E) | 8 | 8 | | 8 | 8 | #6 | 9'-1" | ⊓ |
| u201(E) | 22 | — | | 11 | 11 | #4 | 3'-10" | ⊓ |
| u202(E) | 60 | 16 | | 38 | 38 | #4 | 4'-6" | ⊓ |
| u203(E) | 16 | — | | 8 | 8 | #4 | 4'-10" | ⊓ |
| u204(E) | — | 22 | | 11 | 11 | #4 | 3'-6" | ⊓ |
| u205(E) | — | 60 | | 30 | 30 | #4 | 4'-2" | ⊓ |
| u206(E) | 108 | 108 | | 108 | 108 | #5 | 1'-11" | ⊓ |
| | | | | | | | | |
| | | | | | | | | |
| | | | | | | | | |
| | | | | | | | | |
| v200(E) | 18 | 18 | | 18 | 18 | #4 | 4'-10" | — |
| v201(E) | 198 | 198 | | 198 | 198 | #4 | 4'-1" | — |
| v202(E) | 18 | 18 | | 18 | 18 | #4 | 3'-9" | ⌇ |
| v203(E) | 108 | 108 | | 108 | 108 | #5 | 2'-0" | — |
| | | | | | | | | |
| v205(E) | 90 | 90 | | 90 | 90 | #4 | 2'-9" | ⌉ |
| v206(E) | 24 | 24 | | 24 | 24 | #6 | 6'-10" | — |
| v207(E) | 24 | 24 | | 24 | 24 | #6 | 6'-10" | ⌇ |
| v208(E) | 8 | 8 | | 8 | 8 | #6 | 6'-7" | — |
| v209(E) | 6 | 6 | | 6 | 6 | #6 | 7'-0" | — |
| v210(E) | 12 | 12 | | 12 | 12 | #6 | 10'-9" | — |
| v211(E) | 4 | 4 | | 4 | 4 | #6 | 6'-11" | ⌇ |

STATE OF ILLINOIS
DEPARTMENT OF TRANSPORTATION
NORTH & SOUTH ABUTMENT DETAILS IV
F.A.I.-94 OVER LITTLE CALUMET RIVER
COOK COUNTY
STA. 172+54.39
SN 016-0158 (S. BOUND)
SN 016-0159 (N. BOUND)
SCALE
DRAWN BY B.A.
DATE NOV. 1991
CHECKED BY J.M.

197

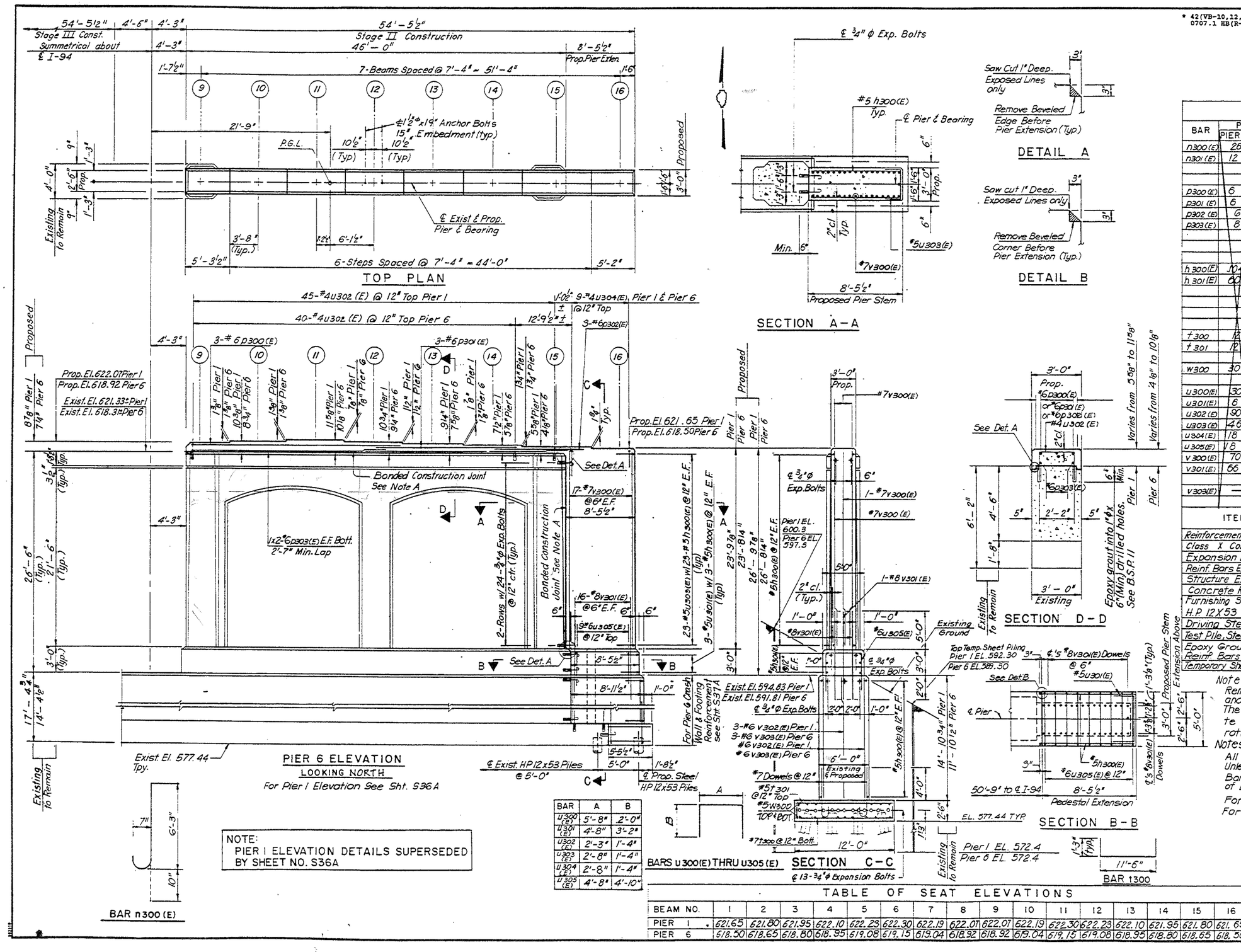


NOTE:
PIER 1 ELEVATION DETAILS SUPERSEDED BY SHEET NO. S36A

| BAR | A | B |
|---|---|---|
| u300 (E) | 5'-8" | 2'-0" |
| u301 (E) | 4'-8" | 3'-2" |
| u302 (E) | 2'-3" | 1'-4" |
| u303 (E) | 2'-8" | 1'-4" |
| u304 (E) | 2'-8" | 1'-4" |
| u305 (E) | 4'-8" | 4'-10" |

TABLE OF SEAT ELEVATIONS

| BEAM NO. | 1 | 2 | 3 | 4 | 5 | 6 | 7 | 8 | 9 | 10 | 11 | 12 | 13 | 14 | 15 | 16 |
|---|---|---|---|---|---|---|---|---|---|---|---|---|---|---|---|---|
| PIER 1 | 621.65 | 621.80 | 621.95 | 622.10 | 622.23 | 622.30 | 622.19 | 622.01 | 622.01 | 622.19 | 622.30 | 622.23 | 622.10 | 621.95 | 621.80 | 621.65 |
| PIER 6 | 618.50 | 618.65 | 618.80 | 618.95 | 619.08 | 619.15 | 619.04 | 618.92 | 618.92 | 619.04 | 619.15 | 619.08 | 618.95 | 618.80 | 618.65 | 618.50 |

BILL OF MATERIAL

| BAR | PIER NO. PIER 1 | PIER NO. PIER 6 | CONST. STAGES II | CONST. STAGES III | SIZE | LENGTH | SHAPE |
|---|---|---|---|---|---|---|---|
| n300(E) | 26 | 26 | 13 | 13 | #7 | 7'-1" | |
| n301(E) | 12 | 12 | 6 | 6 | #7 | 4'-6" | |
| p300(E) | 6 | 6 | 3 | 3 | #6 | 27'-8" | |
| p301(E) | 6 | 6 | 3 | 3 | #6 | 16'-0" | |
| p302(E) | 6 | 6 | 3 | 3 | #6 | 12'-3" | |
| p303(E) | 8 | 8 | 4 | 4 | #6 | 24'-4" | |
| h300(E) | 104 | 104 | 52 | 52 | #5 | 8'-0" | |
| h301(E) | 60 | 48 | 24 | 24 | #5 | 8'-8" | |
| t300 | 12 | 12 | 6 | 6 | #7 | 14'-0" | |
| t301 | 12 | 12 | 6 | 6 | #5 | 11'-6" | |
| w300 | 30 | 30 | 15 | 15 | #5 | 5'-2" | |
| u300(E) | 30 | 24 | 12 | 12 | #5 | 9'-8" | |
| u301(E) | 6 | 6 | 3 | 3 | #5 | 11'-0" | |
| u302(E) | 90 | 80 | 40 | 40 | #4 | 4'-11" | |
| u303(E) | 46 | 46 | 23 | 23 | #5 | 5'-4" | |
| u304(E) | 18 | 18 | 9 | 9 | #4 | 5'-4" | |
| u305(E) | 18 | 18 | 9 | 9 | #6 | 14'-4" | |
| v300(E) | 70 | 70 | 35 | 35 | #7 | 23'-0" | |
| v301(E) | 66 | 66 | 33 | 33 | #8 | 10'-0" | |
| v303(E) | — | 42 | 21 | 21 | #6 | 11'-7 | |

| ITEM | UNIT | TOTAL PIER 1 | TOTAL PIER 6 | CONST. STAGES II | CONST. STAGES III |
|---|---|---|---|---|---|
| Reinforcement Bars | Lbs. | 590 | 650 | 325 | 325 |
| Class X Concrete | Cu. Yd. | 126.6 | 114.6 | 57.3 | 57.3 |
| Expansion Bolts, ¾"φ | Each | 218 | 200 | 100 | 100 |
| Reinf. Bars Epoxy Coated | Lbs. | 10030 | 9650 | 4825 | 4825 |
| Structure Excavation | Cu. Yd. | 278 | 245.8 | 122.9 | 83.7 |
| Concrete Removal | Cu. Yd. | 8.6 | 7.0 | 3.5 | 3.5 |
| Furnishing Steel Piles H.P. 12X53 | Lin. Ft. | 240 | 240 | 120 | 120 |
| Driving Steel Piles | Lin Ft. | 240 | 240 | 120 | 120 |
| Test Pile, Steel H.P. 12X53 | Each | 2 | 2 | 1 | 1 |
| Epoxy Grouted Reinf. Bars | Each | 180 | 172 | 86 | 86 |
| Temporary Sheet Piling | Sq. Ft. | 5,430 | 4,570 | 2285 | 2285 |

Note A:
Remove all Deteriorated Concrete, Thoroughly Clean and Roughen Existing Concrete.
The Reinforcement Bar Dowels from Remove Concrete Areas shall be cleaned, cut to fit and incorporated into New Concrete.

Notes:
All Exposed Edges shall have a ¾" Chamfer Unless Noted.
Bars indicated thus 1X2#6 etc. Indicates 1 line of Bars with 2 Lengths per line.
For Anchor Bolt Details See Sht. No. S 52
For Footing Extension Plan see Sht. No. S37A

STATE OF ILLINOIS
DEPARTMENT OF TRANSPORTATION
PIERS 1 & 6 DETAILS
F.A.I.-94 OVER LITTLE CALUMET RIVER
COOK COUNTY
STA. 172+54.39
SN 016-0158 (S. BOUND)
SN 016-0159 (N. BOUND)
SCALE
DRAWN BY: IMG
DATE NOV. 1991, REV. 6/92
CHECKED BY: J.M.

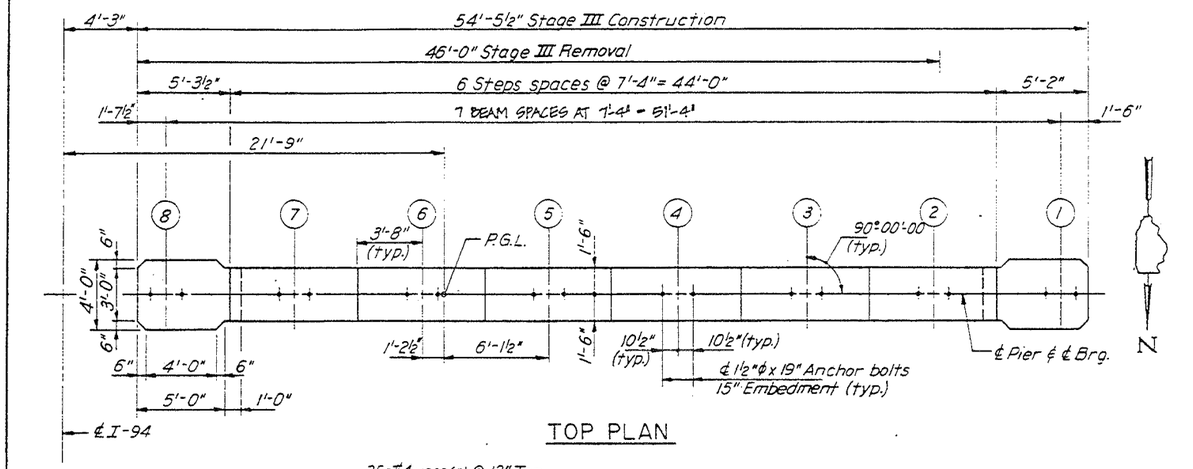


TOP PLAN

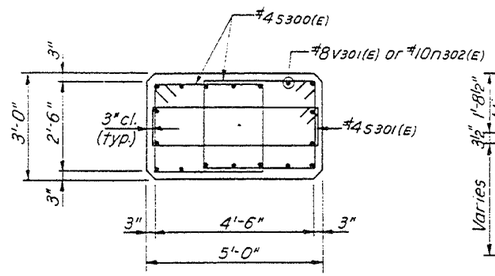


SECTION A-A

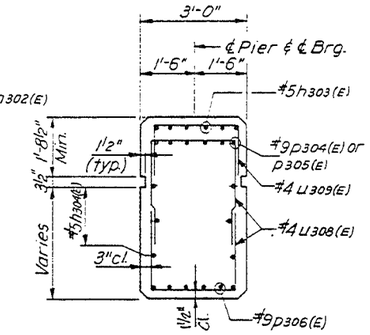


SECTION B-B

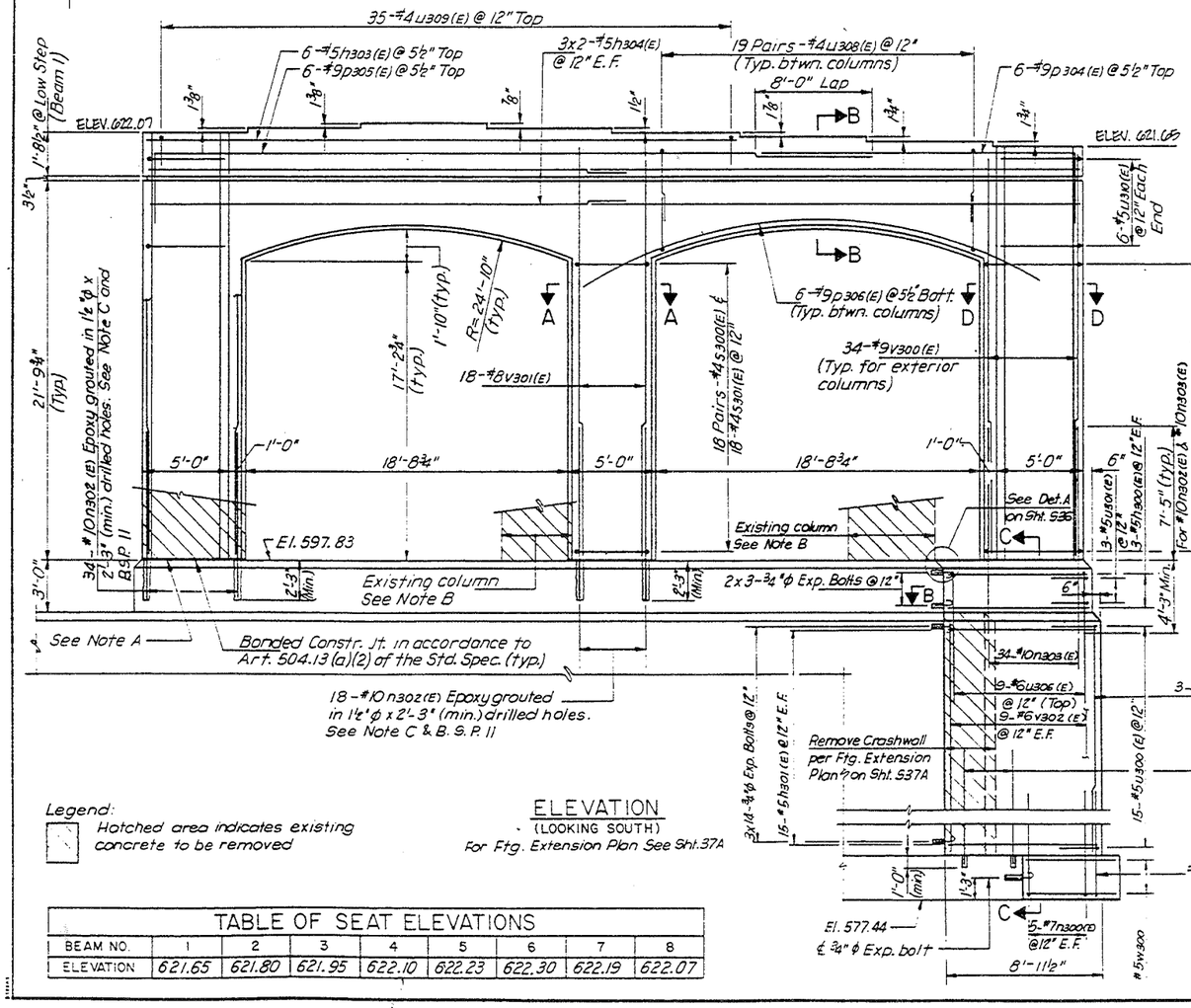


ELEVATION
(LOOKING SOUTH)
For Ftg. Extension Plan See Sht. 37A

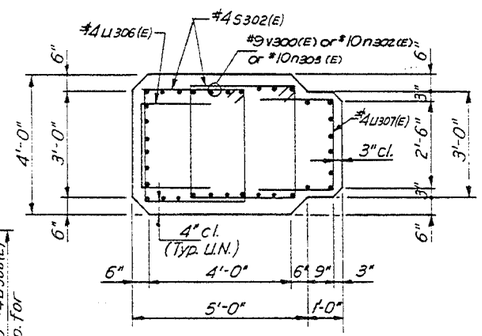


SECTION D-D



| BAR | A | B |
|---|---|---|
| s300(E) | 3'-1" | 2'-6" |
| s301(E) | 4'-6" | 11" |
| s302(E) | 3'-1" | 3'-4" |

| BAR | A | B |
|---|---|---|
| u306(E) | 2'-6" | 2'-6" |
| u307(E) | 2'-6" | 2'-1" |
| u308(E) | 2'-6" | 3'-9" |
| u309(E) | 2'-6" | 1'-6" |
| u310(E) | 3'-4" | 4'-5" |
| u305(E) | 4'-8" | 4'-10" |
| u301(E) | 4'-8" | 3'-2" |
| u300(E) | 5'-8" | 2'-0" |

## BILL OF MATERIALS

| BAR | STAGE III NO. | SIZE | LENGTH | SHAPE |
|---|---|---|---|---|
| h300(E) | 6 | #5 | 8'-0" | — |
| h301(E) | 30 | #5 | 8'-6" | — |
| h303(E) | 6 | #5 | 34'-2" | — |
| h304(E) | 12 | #5 | 28'-2" | — |
| n300(E) | 10 | #7 | 7'-1" | ⊔ |
| n301(E) | 6 | #7 | 4'-6" | — |
| n302(E) | 52 | #10 | 9'-8" | — |
| n303(E) | 34 | #10 | 11'-8" | — |
| p304(E) | 6 | #9 | 23'-0" | ⊓ |
| p305(E) | 6 | #9 | 46'-9" | ⊓ |
| p306(E) | 12 | #9 | 25'-10" | — |
| s300(E) | 36 | #4 | 11'-11" | B |
| s301(E) | 18 | #4 | 11'-7" | B |
| s302(E) | 72 | #4 | 13'-7" | B |
| u300(E) | 15 | #5 | 9'-8" | ⊓ |
| u301(E) | 3 | #5 | 11'-0" | ⊓ |
| u305(E) | 9 | #6 | 14'-4" | ⊓ |
| u306(E) | 36 | #4 | 7'-6" | ⊓ |
| u307(E) | 36 | #4 | 6'-8" | ⊓ |
| u308(E) | 76 | #4 | 10'-0" | ⊓ |
| u309(E) | 35 | #4 | 5'-6" | ⊓ |
| u310(E) | 12 | #5 | 12'-2" | ⊓ |
| v300(E) | 68 | #9 | 23'-6" | — |
| v301(E) | 18 | #8 | 23'-6" | — |
| v302(E) | 21 | #6 | 14'-7" | — |
| w300 | 15 | #5 | 5'-2" | — |
| t300 | 6 | #7 | 14'-0" | ⊔ |
| t301 | 6 | #5 | 11'-6" | — |
| Reinforcement Bars | | | Lbs. | 330 |
| Class X Concrete | | | Cu. Yd. | 114.1 |
| Expansion Bolts, ¾"φ | | | Each | 61 |
| Reinf. Bars (Epoxy Coated) | | | Lbs. | 17050 |
| Structure Excavation | | | Cu. Yd. | 139 |
| Concrete Removal | | | Cu. Yd. | 63.6 |
| Furnishing Steel Piles HP 12x53 | | | Lin. Ft. | 120 |
| Driving Steel Piles | | | Lin. Ft. | 120 |
| Test Pile, Steel HP 12x53 | | | Each | 1 |
| Epoxy Grouted Reinf. Bars | | | Each | 58 |
| Temporary Sheet Piling | | | Sq. Ft. | 2715 |

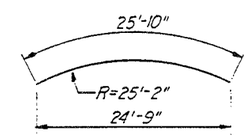


BAR p306(E)

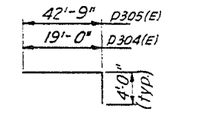


BARS p304(E) & p305(E)

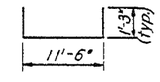


BAR t300

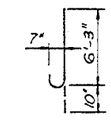


BAR n300(E)

Notes:
1. Space reinforcement in cap to miss anchor bolts.
2. Pour steps monolithically with cap.
3. All edges shall have standard ¾" chamfers unless noted.
4. Reinforcement bars designated (E) shall be epoxy coated.
5. Bars indicated thus 3x2-#5 etc., indicates 3 lines of bars with 2 lengths per line.
6. Minimum bar lap for #5 bars = 2'-2"
7. See Sht. S52 of S54 for Anchor Bolt Details.
8. Work this sheet with Sht's. S36 & S37A.
9. For Section B-B and C-C see Sht. S36

Note A:
Cut existing dowel bars flush with top of crashwall. Cost is incidental to reinforcement bars (Epoxy Coated)

Note B:
Cut existing dowel bars 3" below top of crashwall and patch as required. Cost is incidental to reinforcement bars (Epoxy Coated)

Note C:
Locate corner bars as required to clear existing reinforcement. Allow 4" min. clear distance at edges of crashwall.

Legend:
Hatched area indicates existing concrete to be removed

## TABLE OF SEAT ELEVATIONS

| BEAM NO. | 1 | 2 | 3 | 4 | 5 | 6 | 7 | 8 |
|---|---|---|---|---|---|---|---|---|
| ELEVATION | 621.65 | 621.80 | 621.95 | 622.10 | 622.23 | 622.30 | 622.19 | 622.07 |

STATE OF ILLINOIS
DEPARTMENT OF TRANSPORTATION
PIER I DETAILS
F.A.I.-94 OVER LITTLE CALUMET RIVER
COOK COUNTY
STA. 172+54.39
SN 016-0158 (S. BOUND)
SN 016-0159 (N. BOUND)
SCALE
DRAWN BY KC
DATE NOV. 1991, REV. 6/92
CHECKED BY CBK

* 42(VB-10,12,HB-14,B-11) & 0707.1 HB(R-3)90

| F.A.I. ROUTE | SECTION | COUNTY | TOTAL SHEETS | SHEET NO. |
|---|---|---|---|---|
| I-94 | * | COOK | 318 | 209 |
| STA. | TO STA. | | | |
| FED. ROAD DIST. NO. 7 | ILLINOIS | FEDERAL AID PROJECT | | |

SHT. S37 OF S54

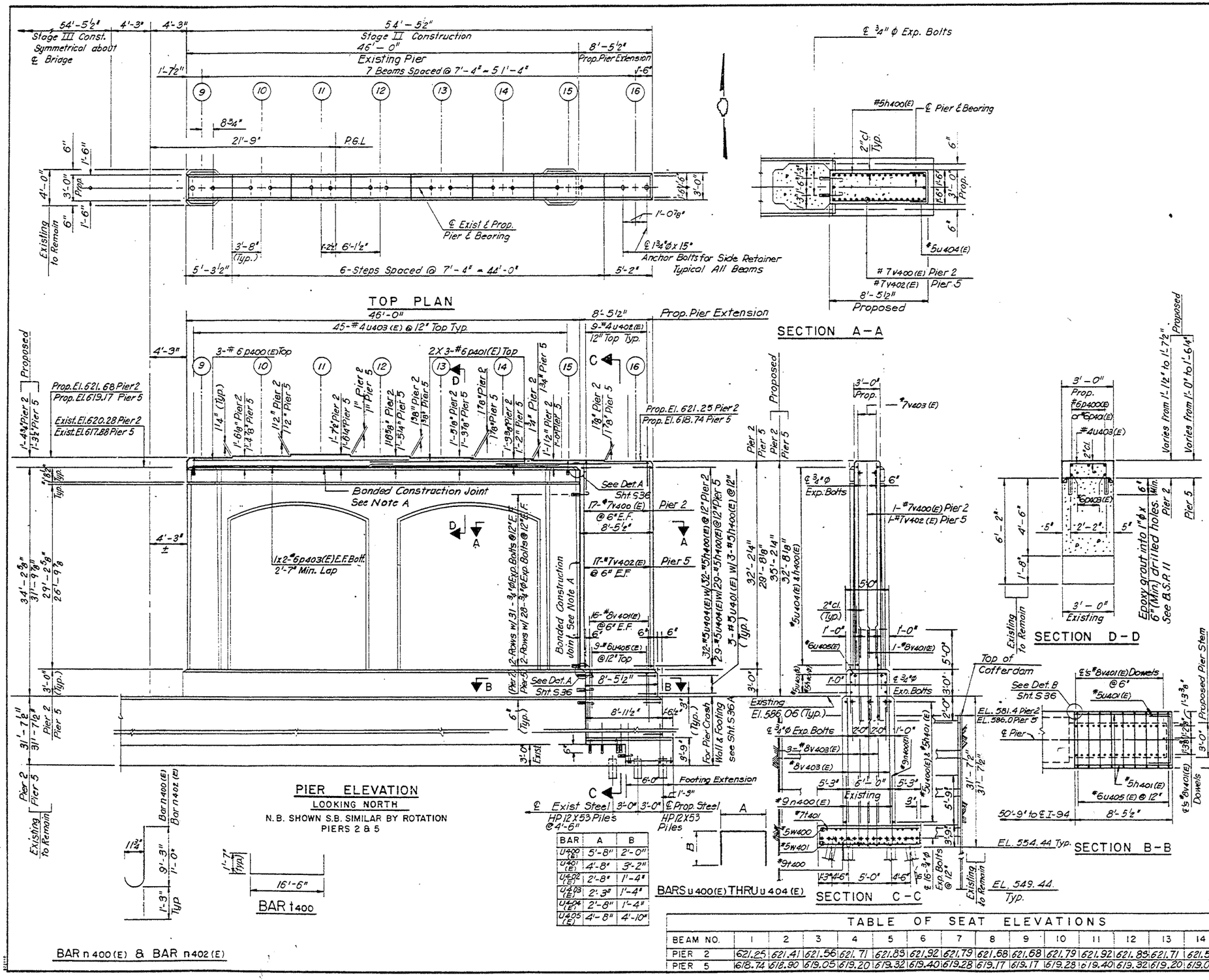


| BAR | A | B |
|---|---|---|
| u400 (E) | 5'-8" | 2'-0" |
| u401 (E) | 4'-8" | 3'-2" |
| u402 (E) | 2'-8" | 1'-4" |
| u403 (E) | 2'-3" | 1'-4" |
| u404 (E) | 2'-8" | 1'-4" |
| u405 (E) | 4'-8" | 4'-10" |

## BILL OF MATERIAL

| BAR | PIER NO. PIER 2 | PIER NO. PIER 5 | CONST. STAGES II | CONST. STAGES III | SIZE | LENGTH | SHAPE |
|---|---|---|---|---|---|---|---|
| n400(E) | 30 | 30 | 30 | 30 | #9 | 10'-6" | J |
| n401(E) | 16 | 16 | 16 | 16 | #9 | 6'-3" | — |
| n402(E) | 80 | 80 | 80 | 80 | #9 | 2'-3" | J |
| p400(E) | 6 | 6 | 6 | 6 | #6 | 28'-8" | — |
| p401(E) | 12 | 12 | 12 | 12 | #6 | 18'-0" | — |
| p403(E) | 8 | 8 | 8 | 8 | #6 | 27'-4" | — |
| h400(E) | 134 | 122 | 128 | 128 | #5 | 8'-0" | — |
| h401(E) | 112 | 112 | 112 | 112 | #5 | 8'-6" | — |
| t400 | 14 | 14 | 14 | 14 | #9 | 19'-8" | — |
| t401 | 20 | 20 | 20 | 20 | #7 | 16'-0" | — |
| w400 | 16 | 16 | 16 | 16 | #5 | 10'-2" | — |
| w401 | 28 | 28 | 28 | 28 | #5 | 5'-6" | — |
| u400(E) | 56 | 56 | 56 | 56 | #5 | 9'-8" | ⊓ |
| u401(E) | 6 | 6 | 6 | 6 | #5 | 11'-0" | ⊓ |
| u402(E) | 18 | 18 | 18 | 18 | #4 | 5'-4" | ⊓ |
| u403(E) | 90 | 90 | 90 | 90 | #4 | 4'-11" | ⊓ |
| u404(E) | 64 | 58 | 61 | 61 | #5 | 5'-4" | ⊓ |
| u405(E) | 18 | 18 | 18 | 18 | #6 | 14'-4" | ⊓ |
| v400(E) | 70 | | 35 | 35 | #7 | 31'-8" | — |
| v401(E) | 66 | 66 | 66 | 66 | #8 | 10'-0" | — |
| v402(E) | | 70 | 35 | 35 | #7 | 29'-2" | — |
| v403(E) | 50 | 50 | 50 | 50 | #8 | 27'-6" | — |

| ITEM | UNIT | TOTAL PIER 2 | TOTAL PIER 5 | CONST. STAGE II | CONST. STAGE III |
|---|---|---|---|---|---|
| Cofferdam | Each | 2 | 2 | 2 | 2 |
| Reinforcement Bars | Lbs. | 1920 | 1920 | 1920 | 1920 |
| Class "X" Concrete | Cu. Yd. | 214 | 208 | 211 | 211 |
| Expansion Bolts, 3/4"φ | Each | 280 | 268 | 274 | 274 |
| Reinf. Bars, Epoxy Coated | Lbs. | 16,750 | 16,260 | 16,505 | 16,505 |
| Concrete Removal | Cu. Yd. | 15.8 | 15.8 | 15.8 | 15.8 |
| Furnishing Steel Piles HP 12X23 | Lin. Ft. | 420 | 420 | 420 | 420 |
| Driving Steel Piles | Lin. Ft. | 420 | 420 | 420 | 420 |
| Test Piles, Steel HP 12X53 | Each | 2 | 2 | 2 | 2 |
| Epoxy Grouted Reinf. Bars | Each | 276 | 276 | 276 | 276 |
| Cofferdam Excavation | Cu. Yd. | 235 | 235 | 235 | 515.2 |

Note A: Remove all Deteriorated Concrete Thoroughly Clean and Roughen Existing Concrete. The Reinforcement Bar Dowels from Removed Concrete Areas shall be cleaned, Cut to fit and incorporated into New Concrete.

NOTES:
All Exposed Edges shall have a 3/4" Chamfer Unless Noted.
Bars indicated thus 1X2-#6 etc. Indicates 1 line of bars with 2 lengths per line.
For Anchor Bolt Details See Sht. No. S52

## TABLE OF SEAT ELEVATIONS

| BEAM NO. | 1 | 2 | 3 | 4 | 5 | 6 | 7 | 8 | 9 | 10 | 11 | 12 | 13 | 14 | 15 | 16 |
|---|---|---|---|---|---|---|---|---|---|---|---|---|---|---|---|---|
| PIER 2 | 621.25 | 621.41 | 621.56 | 621.71 | 621.83 | 621.92 | 621.79 | 621.68 | 621.68 | 621.79 | 621.92 | 621.83 | 621.71 | 621.56 | 621.41 | 621.25 |
| PIER 5 | 618.74 | 618.90 | 619.05 | 619.20 | 619.32 | 619.40 | 619.28 | 619.17 | 619.17 | 619.28 | 619.40 | 619.32 | 619.20 | 619.05 | 618.90 | 618.74 |

STATE OF ILLINOIS
DEPARTMENT OF TRANSPORTATION
PIERS 2 & 5 DETAILS
F.A.I.-94 OVER LITTLE CALUMET RIVER
COOK COUNTY

STA. 172+54.39
SN 016-0158 (S. BOUND)
SN 016-0159 (N. BOUND)

SCALE
DATE NOV. 1991
DRAWN BY: JMG
CHECKED BY: J.M.

| F.A. ROUTE | SECTION | COUNTY | TOTAL SHEETS | SHEET NO. |
|---|---|---|---|---|
| I-94 | * | COOK | 318 | 210 |
| STA. | | TO STA. | | |
| FED. ROAD DIST. NO. 7 | ILLINOIS | FEDERAL AID PROJECT | | |

* 42(VB-10,12,HB-14,B-11) & 0707.1 HB(R-3)90

SHT. S37A OF S54

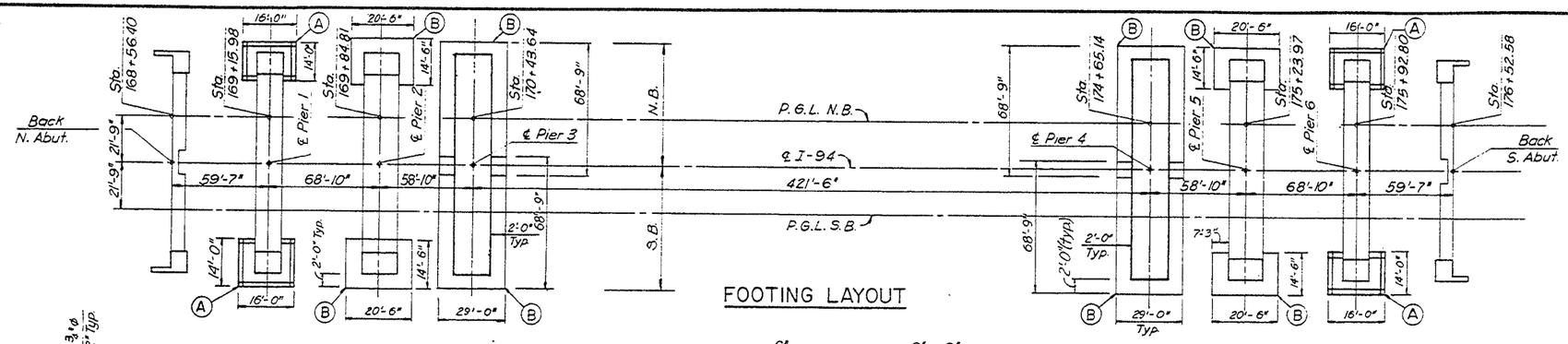


FOOTING LAYOUT

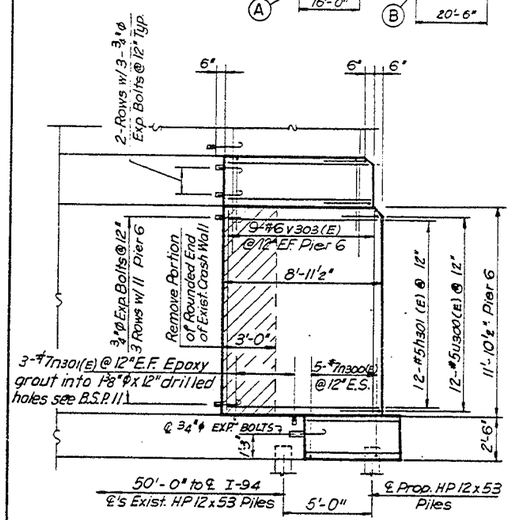


CRASH WALL EXTENSION - ELEVATION
PIER 6

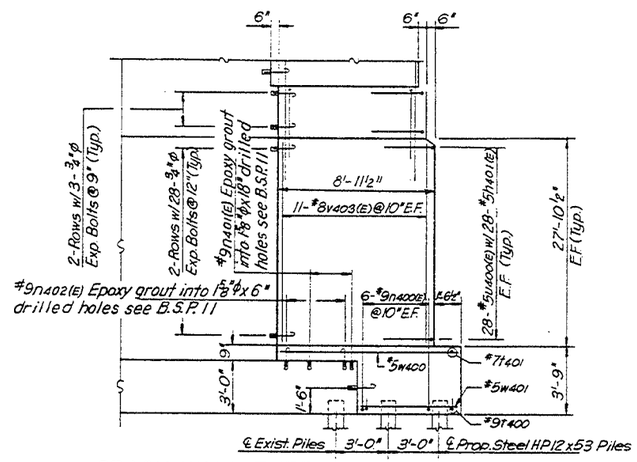


CRASH WALL EXTENSION - ELEVATION
PIERS 2 & 5

LEGEND:

(A) Temporary Sheet Piling Piers 1 and 6

(B) Cofferdam Piers 2,3,4 and 5

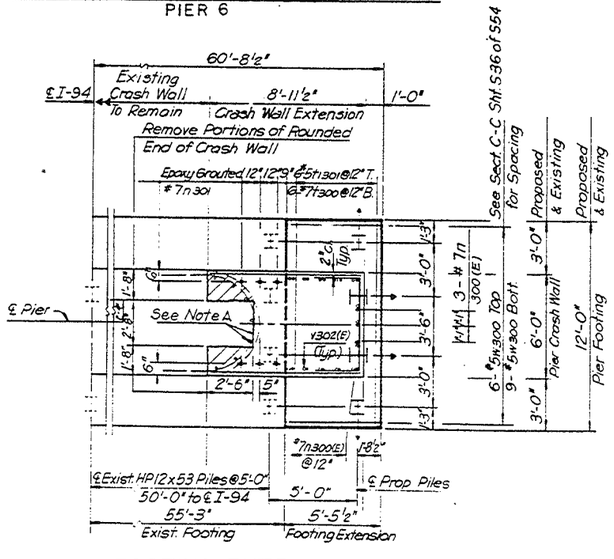


FOOTING EXTENSION - PLAN
PIERS 1 & 6

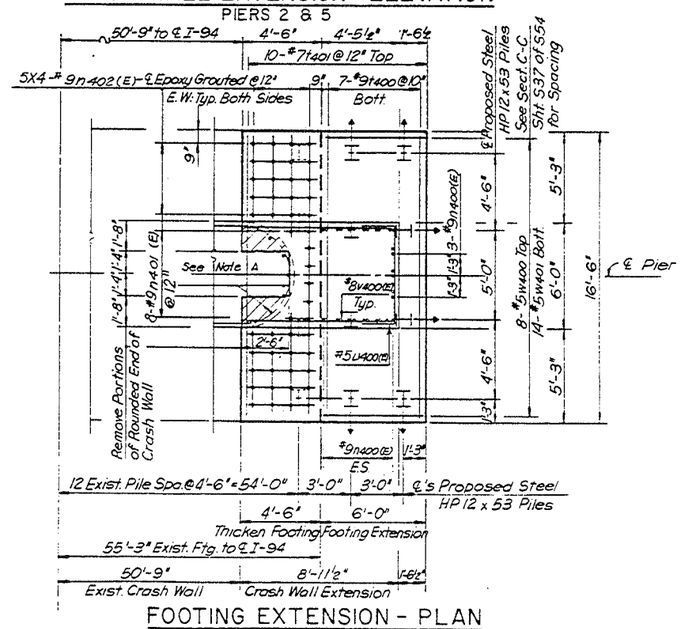


FOOTING EXTENSION - PLAN
PIERS 2 & 5

NOTE A:

Remove all Deteriorated Concrete. Thoroughly Clean and Roughen Existing Concrete.
The Reinforcement Bar Dowels from Removed Concrete Areas shall be cleaned, and Incorporated into New Concrete.

All Exposed Edges shall have a ¾" Chamfer unless Noted.
Bars indicated thus 1X2 #6 etc. indicates 1 Line of Bars with 2 lengths per line.
For Anchor Bolt Details See Sht. No. S 52.

Pile Data:

Type: HP 12 X 53
Capacity: 50 Ton
EST. Length: 40 ft. for Pier 1 & 6; 30 ft. for Pier 2 & 5
No. Reqd. 8 for Pier 1 (Includes 2 Test Pile)
8 for Pier 6 (Includes 2 Test Pile)
16 for Pier 2 (Includes 2 Test Pile)
16 for Pier 5 (Includes 2 Test Pile)

STATE OF ILLINOIS
DEPARTMENT OF TRANSPORTATION
PIERS 1 & 6 AND 2 & 5 DETAILS
F.A.I-94 OVER LITTLE CALUMET RIVER
COOK COUNTY

STA. 172+54.39 SN 016-0158 (S.BOUND)
SN 016-0159 (N.BOUND)

SCALE DRAWN BY S.P.
DATE NOV. 1991, REV. 6/92 CHECKED BY J.M.

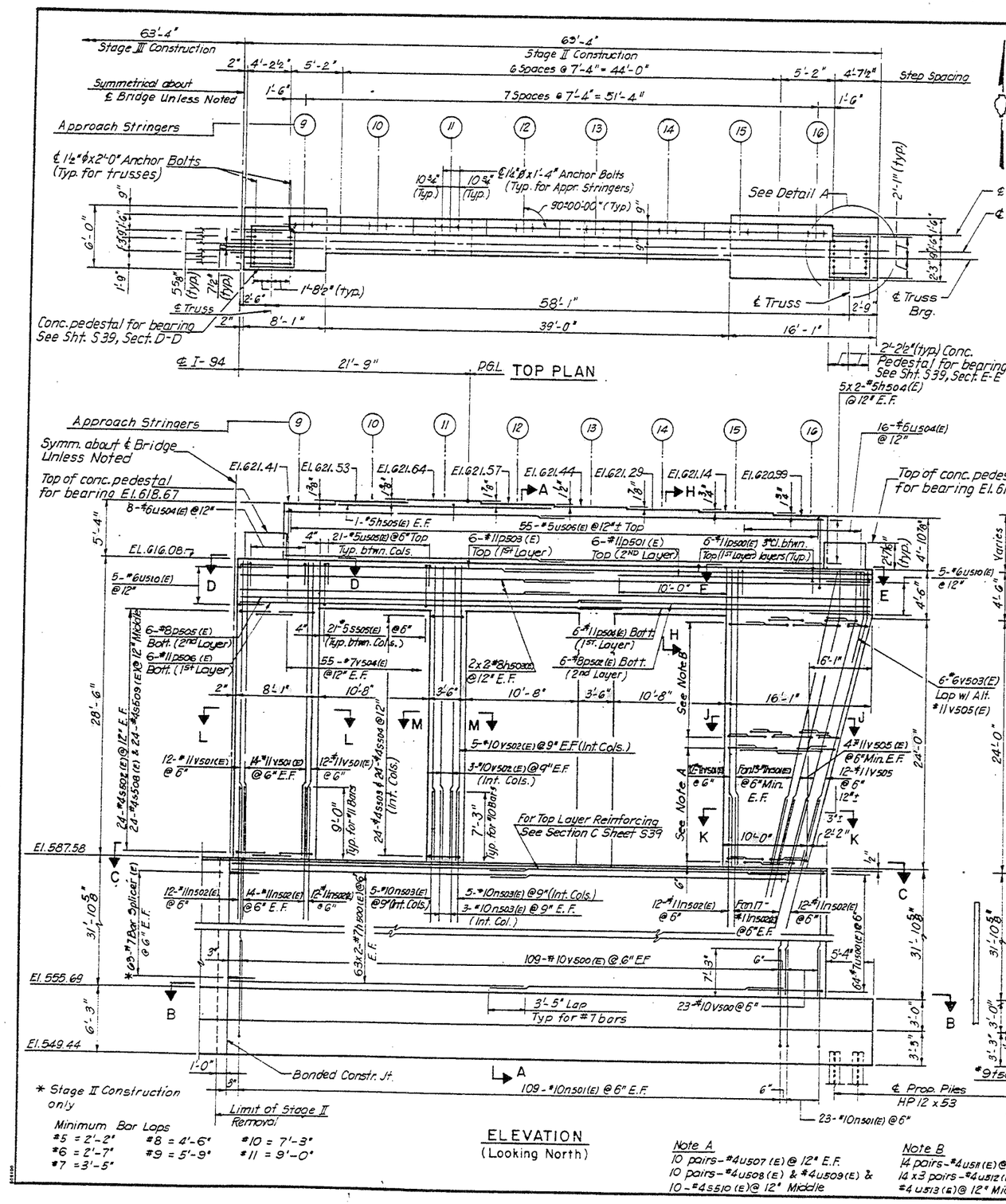


ELEVATION
(Looking North)

Notes:

Space reinforcement in cap and backwall to miss Anchor Bolts.
All edges shall have standard ¾" chamfer except as noted.
Pour steps monolithically with back wall.
Bars indicated thus 63 X 2-#7 etc. indicates 63 lines of bars with 2 lengths per line.
For Footing Plan and Sections B-B, C-C, D-D E-E, H-H, J-J, K-K, L-L, & M-M see Sht. No. S 39.
Min. Splice Length for #5 Bar: 2'-2"

The Contractor shall be aware of the possible presence of seal concrete of unknown extent below and around the existing footings of existing Pier No. 3 & 4. During Pier reconstruction the seal concrete may unfavorably influence:

- Driving of sheet piling for temporary cofferdams. Heaviest available section of sheet piling shall be assumed for driving in hard substratum.
- Driving New HP Piles
- Excavation

The Contractor shall also be aware of possible need to install new seal concrete over the excavated area to keep the excavation dewatered.

| BAR | A | B |
|---|---|---|
| n500(E) | 1'-7" | 5'-7" |
| n501(E) | 1'-10" | 12'-1" |
| v 504(E) | 1'-2" | 8'-8" |
| h 506(E) | 4'-2" | 7'-8" |
| h 507(E) | 4'-2" | 14'-4" |

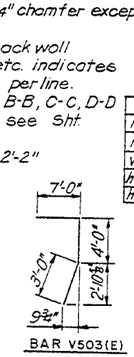


BAR V503(E)

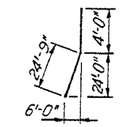


BAR V505

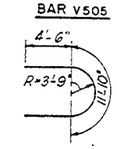


BAR U500

| BAR | A | B | C |
|---|---|---|---|
| S506(E) | 4'-1" | 2'-7" | 5½" |
| S507(E) | 3'-10" | 2'-9" | 5½" |
| S502(E) | 3'-0" | 5'-8" | 4½" |
| S503(E) | 3'-2" | 3'-2" | 4½" |
| S504 (E) | 2'-3" | 2'-3" | 4½" |
| S508(E) | 4'-6" | 5'-8" | 4½" |
| S509(E) | 1'-6" | 7'-9" | 4½" |

| BAR | A | B |
|---|---|---|
| U501(E) | 7'-4" | 2'-0" |
| U502(E) | 1'-4" | 2'-0" |
| U503(E) | 2'-4" | 2'-0" |
| U504(E) | 5'-8" | 4'-0" |
| U505(E) | 3'-2" | 2'-0" |
| U506(E) | 1'-0" | 2'-9" |
| U507(E) | 5'-8" | 2'-11" |
| U508(E) | 5'-8" | 5'-0" |
| U509(E) | 2'-2" | 7'-1" |
| T502 | 24'-8" | 2'-0" |
| U510(E) | 5'-8" | 4'-0" |
| U511(E) | 5'-8" | 2'-6" |
| U512(E) | 5'-8" | 3'-5" |
| U513(E) | 2'-2" | 8'-9" |

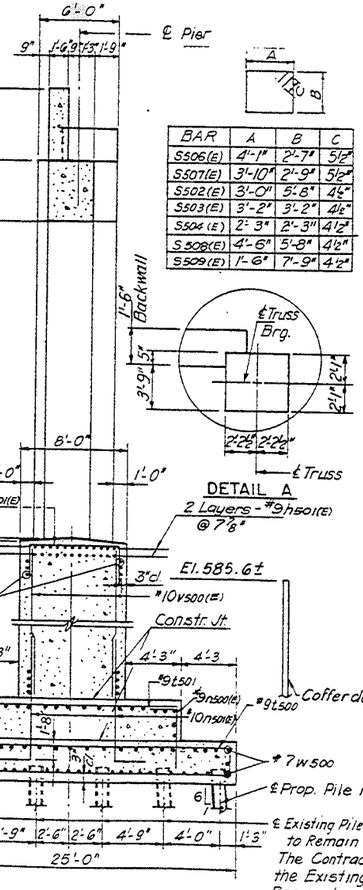


SECTION A-A

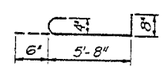


BAR S510(E)

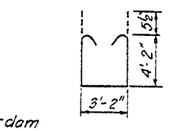


BAR S505(E)

Note A
10 pairs-#4u507 (E) @ 12" E.F.
10 pairs-#4u508 (E) & #4u509 (E) &
10-#4s510 (E) @ 12" Middle

Note B
14 pairs-#4u511(E) @ 12" E.F.
14 x 3 pairs-#4u512 (E) & 14 pairs-
#4 u513 (E) @ 12" Middle

* 42(VB-10,12,HB-14,B-11) & 0707.1 HB(R-3)90

| F.A. ROUTE | SECTION | COUNTY | TOTAL SHEETS | SHEET NO. |
|---|---|---|---|---|
| I-94 | * | COOK | 318 | 211 |
| STA. | | TO STA. | | |
| FED. ROAD DIST. NO. 7 | | ILLINOIS | FEDERAL AID PROJECT | |

SHT S38 OF S54

## BILL OF MATERIAL

| BAR | TOTAL NO. | CONSTR. STAGE II | CONSTR. STAGE III | SIZE | LENGTH | SHAPE |
|---|---|---|---|---|---|---|
| h500(E) | 504 | 252 | 252 | #7 | 29'-4" | — |
| h501(E) | 96 | 48 | 48 | #9 | 30'-6" | — |
| S508(E) | 48 | 24 | 24 | #4 | 21'-1" | ⊡ |
| h503(E) | 16 | 8 | 8 | #8 | 33'-8" | — |
| h504(E) | 40 | 20 | 20 | #5 | 28'-1" | — |
| h505(E) | 4 | 2 | 2 | #5 | 21'-8" | — |
| h506(E) | 20 | 10 | 10 | #6 | 11'-10" | ⊓ |
| h507(E) | 20 | 10 | 10 | #6 | 18'-6" | ⊓ |
| S509(E) | 48 | 24 | 24 | #4 | 19'-3" | ⊡ |
| S510(E) | 20 | 10 | 10 | #4 | 6'-10" | ⊔ |
| n500(E) | 294 | 147 | 147 | #9 | 7'-2" | L |
| n501(E) | 482 | 241 | 241 | #10 | 13'-11 | L |
| n502(E) | 220 | 110 | 110 | #11 | 18'-0" | — |
| n503(E) | 64 | 32 | 32 | #10 | 14'-6" | — |
| U511(E) | 112 | 56 | 56 | #4 | 10'-8" | ⊓ |
| U512(E) | 168 | 84 | 84 | #4 | 12'-6" | ⊓ |
| p500(E) | 12 | 6 | 6 | #11 | 39'-11" | — |
| p501(E) | 12 | 6 | 6 | #11 | 25'-11" | — |
| U513(E) | 56 | 28 | 28 | #4 | 19'-8" | ⊓ |
| p502(E) | 12 | 6 | 6 | #8 | 30'-7" | — |
| p503(E) | 12 | 6 | 6 | #11 | 31'-11" | — |
| p504(E) | 12 | 6 | 6 | #11 | 32'-10" | — |
| p505(E) | 12 | 6 | 6 | #8 | 36'-9" | — |
| p506(E) | 12 | 6 | 6 | #11 | 39'-0" | — |
| | | | | | | |
| S507(E) | 48 | 24 | 24 | #5 | 14'-1" | ⊡ |
| S502(E) | 96 | 48 | 48 | #4 | 18'-1" | ⊡ |
| S503(E) | 96 | 48 | 48 | #4 | 13'-5" | ⊡ |
| S504(E) | 96 | 48 | 48 | #4 | 9'-9" | ⊡ |
| S505(E) | 126 | 63 | 63 | #5 | 12'-5" | ⊡ |
| S506(E) | 48 | 24 | 24 | #5 | 14'-3" | ⊡ |
| T500 | 132 | 66 | 66 | #9 | 24'-8" | — |
| T501 | 134 | 67 | 67 | #9 | 16'-2" | — |
| T502 | 248 | 124 | 124 | #9 | 28'-8" | — |
| V506(E) | 96 | 48 | 48 | #7 | 6'-1" | ⊓ |
| U500(E) | 128 | 64 | 64 | #7 | 21'-0" | ⊓ |
| U501(E) | 126 | 63 | 63 | #7 | 11'-4" | ⊓ |
| U502(E) | 28 | 14 | 14 | #7 | 5'-4" | ⊓ |
| U503(E) | 28 | 14 | 14 | #7 | 6'-4" | ⊓ |
| U504(E) | 48 | 24 | 24 | #6 | 13'-8" | ⊓ |
| U505(E) | 126 | 63 | 63 | #5 | 7'-2" | ⊓ |
| U506(E) | 110 | 55 | 55 | #5 | 6'-6" | ⊓ |
| U507(E) | 80 | 40 | 40 | #4 | 11'-6" | ⊓ |
| U508(E) | 40 | 20 | 20 | #4 | 15'-8" | ⊓ |
| U509(E) | 40 | 20 | 20 | #4 | 16'-4" | ⊓ |
| U510(E) | 20 | 10 | 10 | #6 | 13'-8" | ⊓ |
| V500(E) | 482 | 241 | 241 | #10 | 31'-8" | — |
| V501(E) | 180 | 90 | 90 | #11 | 28'-3" | — |
| V502(E) | 64 | 32 | 32 | #10 | 28'-3" | — |
| V503(E) | 12 | 6 | 6 | #6 | 14'-0" | ⊓ |
| V504(E) | 220 | 110 | 110 | #7 | 9'-10" | ⊓ |
| V505(E) | 40 | 20 | 20 | #11 | 28'-9" | ⊓ |
| W500 | 292 | 146 | 146 | #7 | 33'-11" | — |

| ITEM | UNIT | TOTAL | CONSTRUCTION STAGE II | CONSTRUCTION STAGE III |
|---|---|---|---|---|
| Cofferdam | each | 2 | 1 | 1 |
| Reinf. Bars, Epoxy Coated | Lbs. | 253,920 | 126,960 | 126,960 |
| Reinforcement Bars | Lbs. | 62,860 | 31,430 | 31,430 |
| Class X Concrete | Cu.Yds | 2,151.8 | 1,075.9 | 1,075.9 |
| Furnishing Steel Piles, HP12x53 | Lin.Ft | 1,950 | 975 | 975 |
| Driving Steel Piles | Lin.Ft | 1,950 | 975 | 975 |
| Test Pile, Steel HP12x53 | Each | 2 | 1 | 1 |
| Concrete Removal | Cu.Yds | 1821 | 923.1 | 897.9 |
| | | | | |
| Cofferdam Excavation | Cu.Yds. | 2,139.1 | 1,170.3 | 1,595.6 |

STATE OF ILLINOIS
DEPARTMENT OF TRANSPORTATION
PIER 3 DETAILS-I
FAI-94 OVER LITTLE CALUMET RIVER
COOK COUNTY

STA. 172+54.39
SN 016-0158 (S. BOUND)
SN 016-0159 (N. BOUND)

SCALE
DRAWN BY S.P.
DATE NOV. 1991
CHECKED BY J.M.

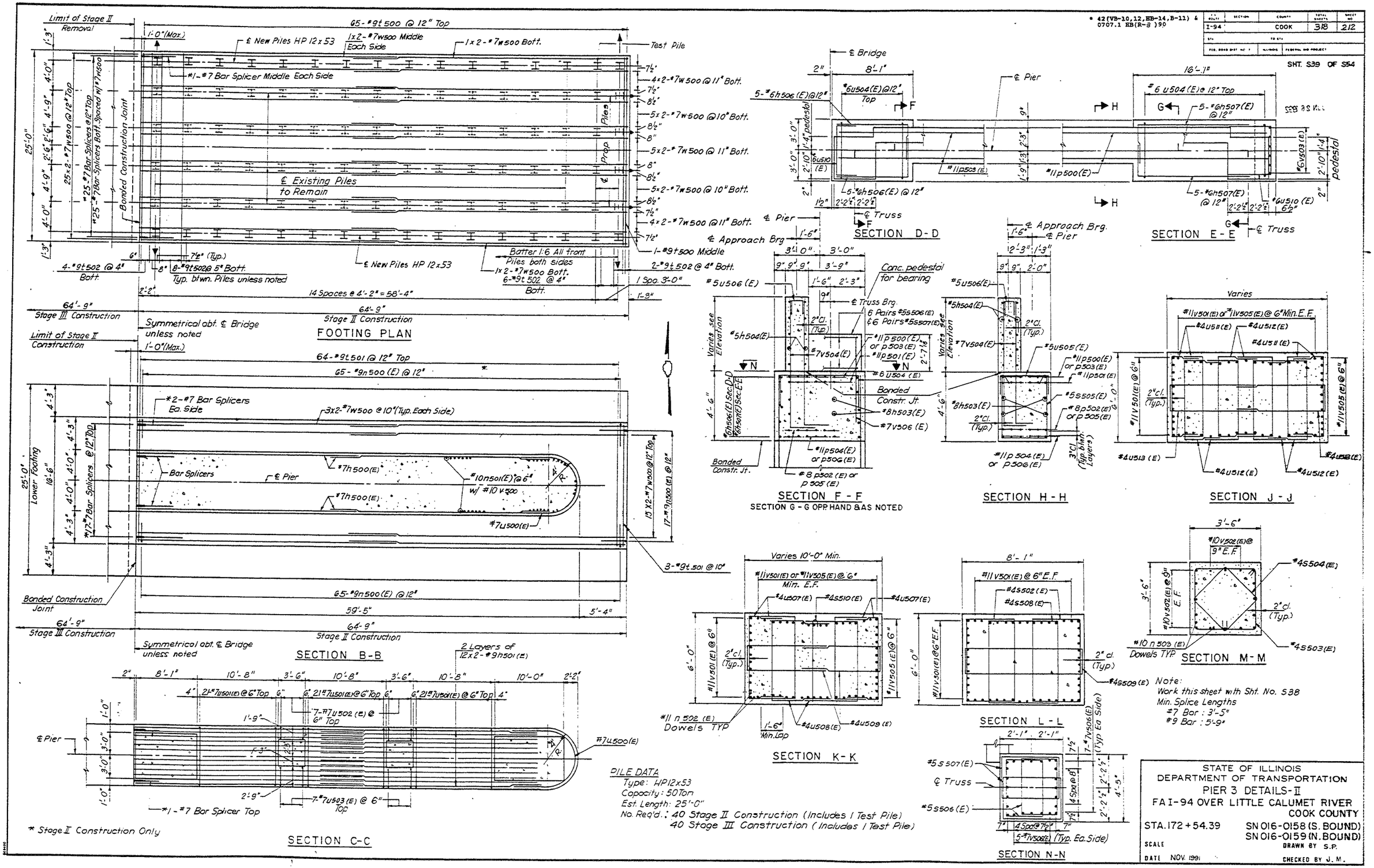


STATE OF ILLINOIS
DEPARTMENT OF TRANSPORTATION
PIER 3 DETAILS-II
FA I-94 OVER LITTLE CALUMET RIVER
COOK COUNTY

STA. 172+54.39 SN 016-0158 (S. BOUND)
SN 016-0159 (N. BOUND)

SCALE DRAWN BY S.P.

DATE NOV. 1991 CHECKED BY J.M.

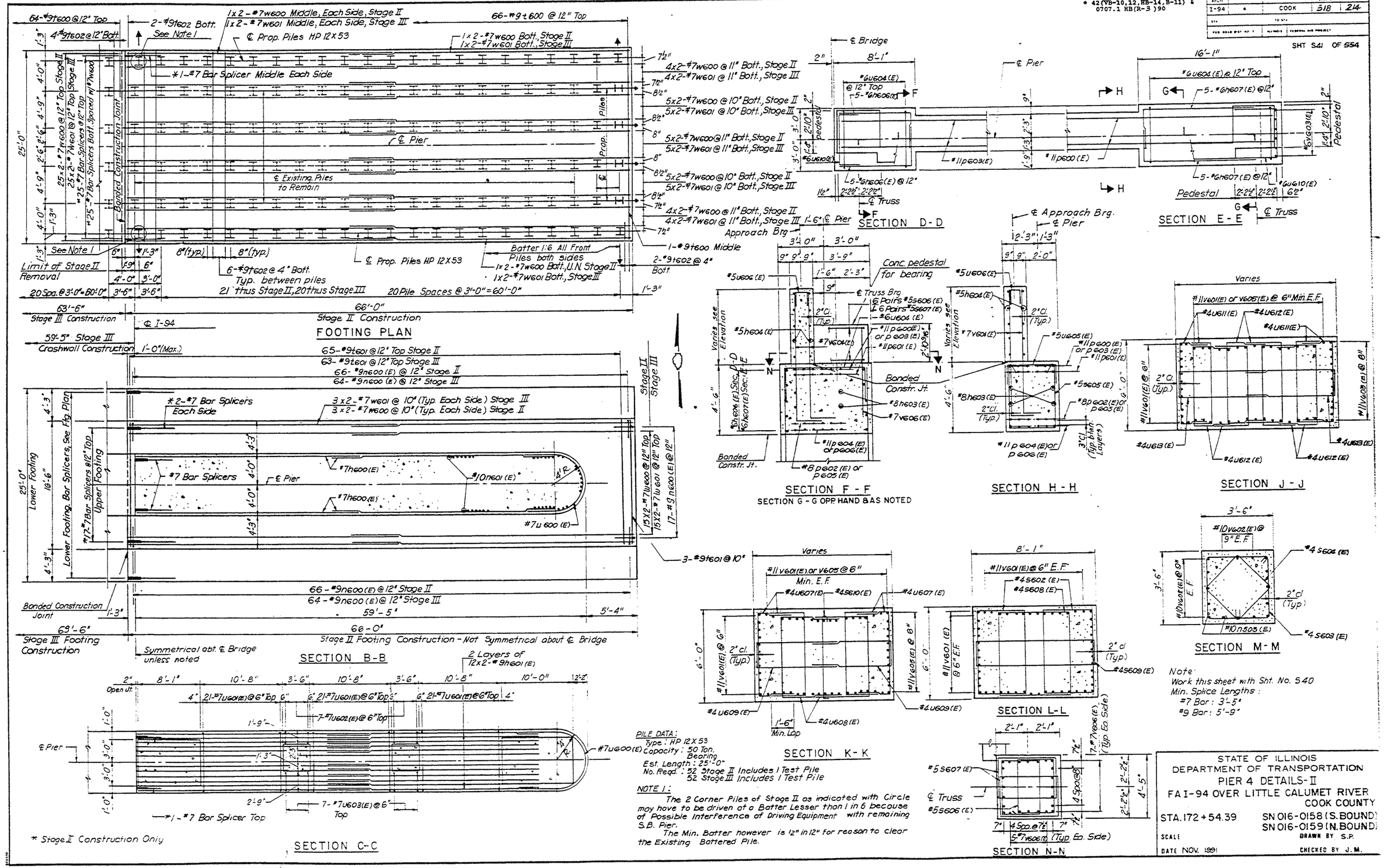
FOOTING PLAN
SECTION B-B
SECTION C-C
SECTION D-D
SECTION E-E
SECTION F-F
SECTION G-G OPP HAND & AS NOTED
SECTION H-H
SECTION J-J
SECTION K-K
SECTION L-L
SECTION M-M
SECTION N-N
Stage III Construction
Stage II Construction
Crashwall Construction
Limit of Stage II Removal
Bonded Construction Joint
Lower Footing
Upper Footing
Stage III Footing Construction
Stage II Footing Construction - Not Symmetrical about ℄ Bridge
Symmetrical abt. ℄ Bridge unless noted
* Stage II Construction Only
PILE DATA:
Type: HP 12X53
Capacity: 50 Ton. Bearing
Est. Length: 25'-0"
No. Reqd.: 52 Stage II Includes 1 Test Pile
52 Stage III Includes 1 Test Pile
NOTE 1:
The 2 Corner Piles of Stage II as indicated with Circle may have to be driven at a Batter Lesser than 1 in 6 because of Possible Interference of Driving Equipment with remaining S.B. Pier.
The Min. Batter however is 12" in 12" for reason to clear the Existing Battered Pile.
Note:
Work this sheet with Sht. No. S40
Min. Splice Lengths:
#7 Bar: 3'-5"
#9 Bar: 5'-9"
STATE OF ILLINOIS
DEPARTMENT OF TRANSPORTATION
PIER 4 DETAILS-II
FAI-94 OVER LITTLE CALUMET RIVER
COOK COUNTY
STA. 172+54.39
SN 016-0158 (S. BOUND)
SN 016-0159 (N. BOUND)
SCALE
DRAWN BY S.P.
DATE NOV. 1991
CHECKED BY J.M.

| F.A. ROUTE | SECTION | COUNTY | TOTAL SHEETS | SHEET NO. |
|---|---|---|---|---|
| I-94 | * | COOK | 318 | 215 |
| STA. | | TO STA. | | |
| FED. ROAD DIST. NO. 7 | ILLINOIS | FEDERAL AID PROJECT | | |

* 42(VB-10,12,HB-14,B-11) & 0707.1 HB(R-3)90

SHT. S42 OF S54

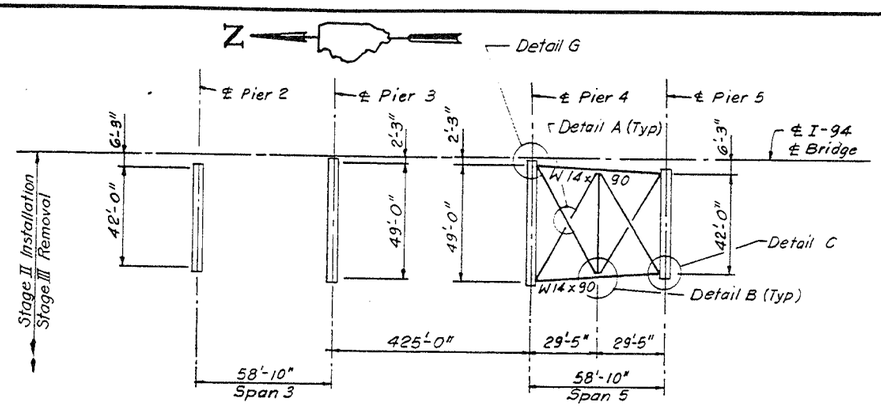


TOP BRACING PLAN
(South bound Bridge)

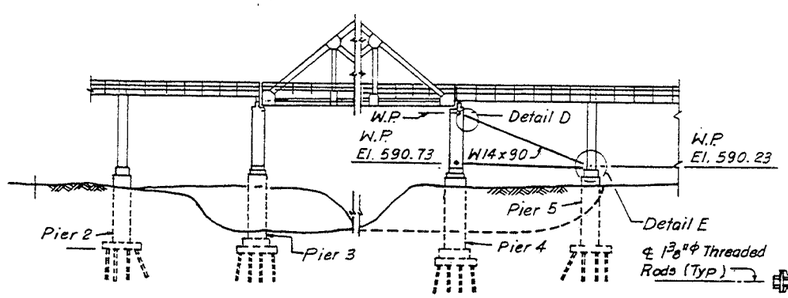


ELEVATION

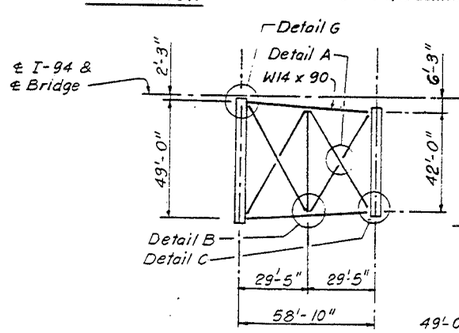


BOTTOM BRACING PLAN

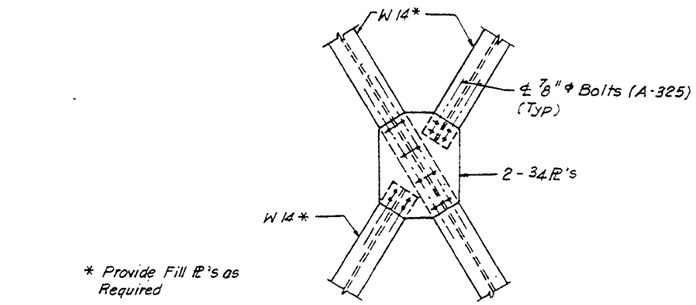


* Provide Fill PL's as Required

DETAIL A

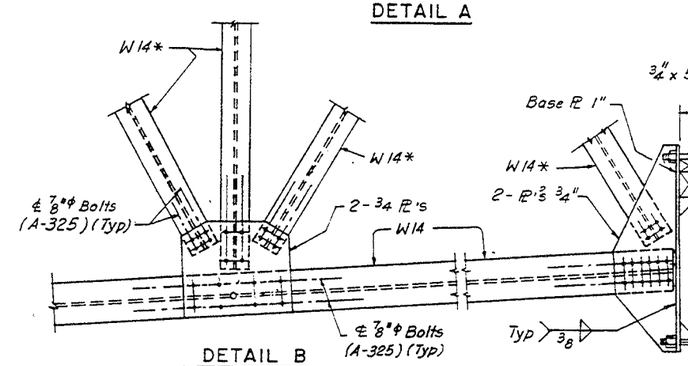


DETAIL B

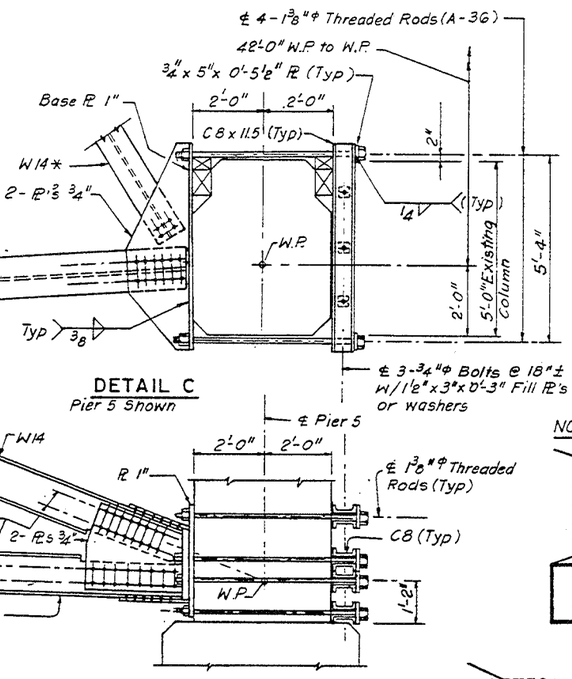


DETAIL C
Pier 5 Shown

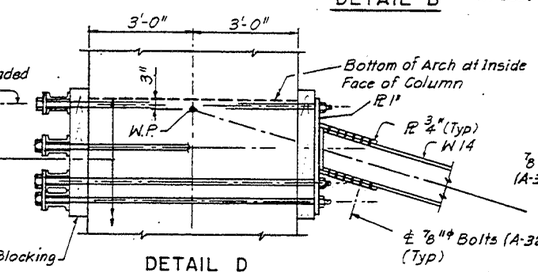


DETAIL D
Pier 4 Shown
Pier 3 Opposite Hand

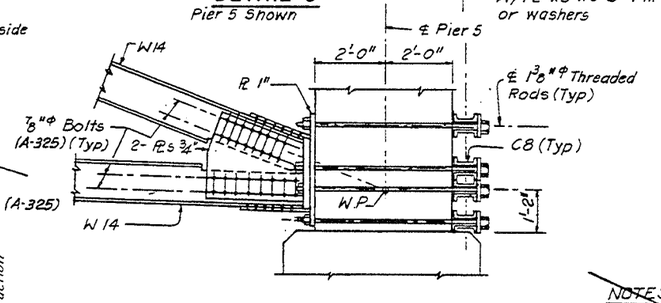


DETAIL E
Pier 5 Shown

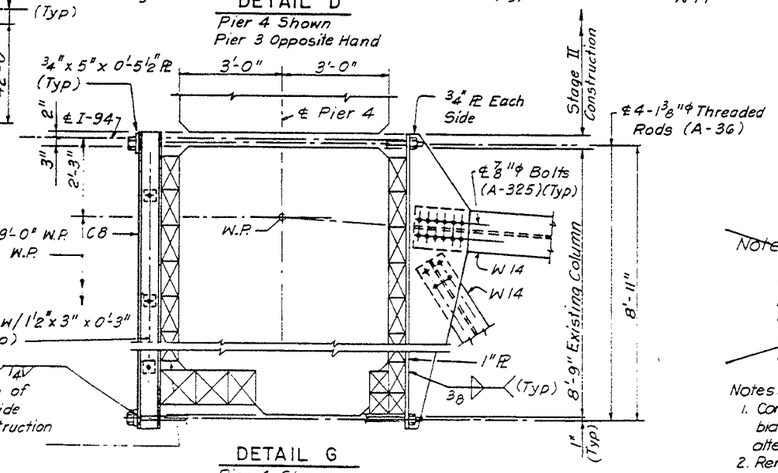


DETAIL G
Pier 4 Shown

NOTES FOR TEMPORARY MATERIAL

1. No point required
2. Contractor may substitute a larger size material as approved by the Engineer.
3. Price for Temporary bracing to be Lump Sum.
4. Estimated Weight of Structural Steel for Temporary Support System = 94,000 lbs. (as shown)

NOTES:

1. Piers shall be Entirely Braced before 2-Way Traffic is Placed on the South bound Truss.
2. Tie Rods must be Tightened to Prevent Vertical Movement of Brackets.
3. All Blocking Shall be Hardwood.
4. All Bracing Shall be Installed with a very Tight Fit to Insure Transfer of Horizontal Loads to Pier No. 5 See Special Provisions.

(Continuation of Notes)
Steel Removal. Material to become property of Contractor.

Note:
The contractor has the option to submit an alternate temporary bracing system subject to the approval of the Engineer. See the special provision for Installing Temporary Bracing System.

Notes:

1. Contractor shall verify actual field conditions prior to bid, as previous Contractor had option to propose alternate support system.
2. Removal of temporary bracing (Structural Steel Support System) installed in previous contract shall be paid for by the Contract Unit Price per pound for Structural

STATE OF ILLINOIS
DEPARTMENT OF TRANSPORTATION
TEMPORARY BRACING AT PIER NO. 4
F.A.I.-94 OVER LITTLE CALUMET RIVER
COOK COUNTY

STA. 172 + 54.39
SN 016-0158 (S. BOUND)
SN 016-0159 (N. BOUND)

SCALE
DRAWN BY J.C.
DATE NOV. 1991
CHECKED BY J.M.

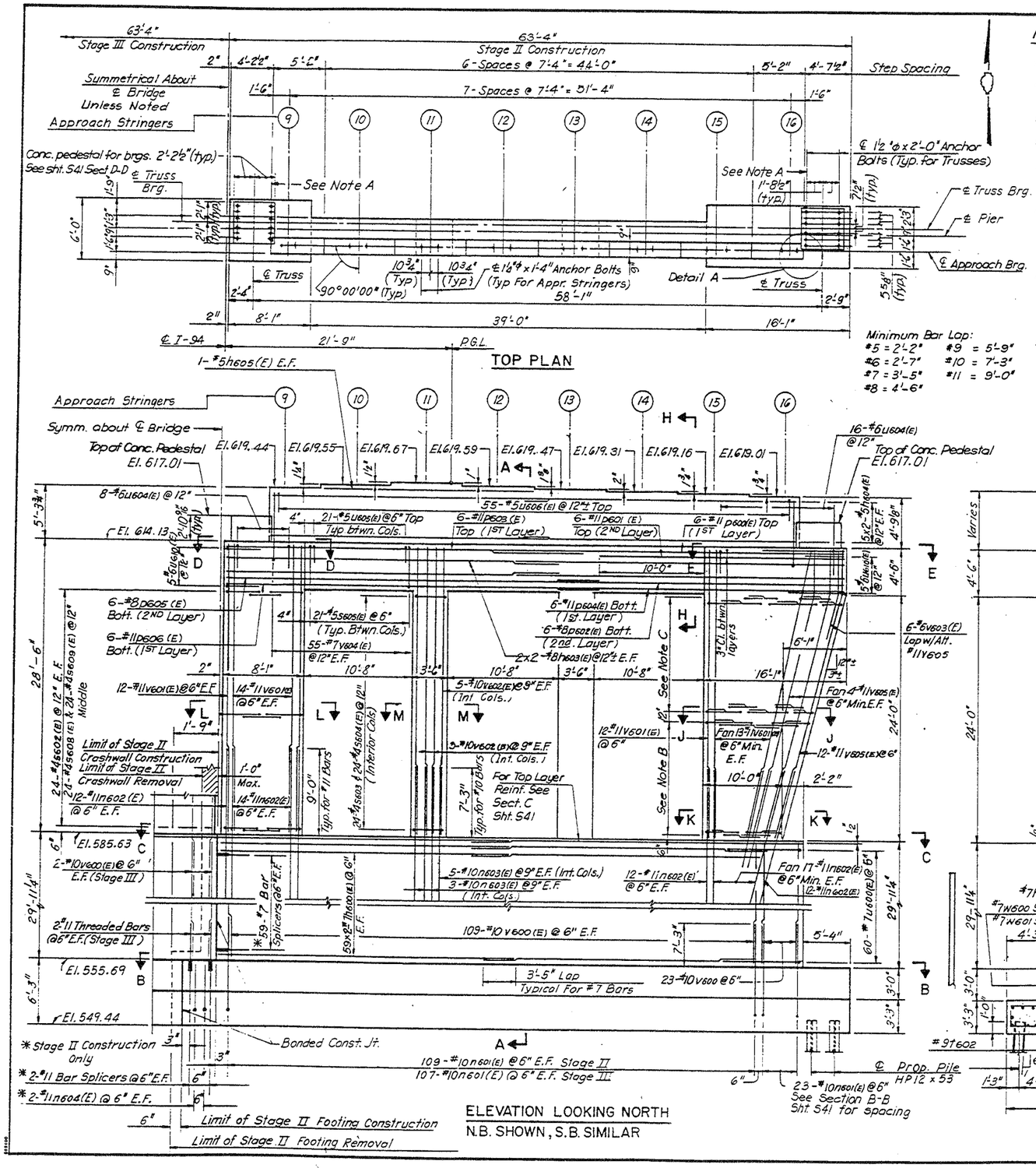


## Notes:

Space Reinforcement in Cap and Backwall to miss Anchor Bolts.

All edges shall have Standard ¾" Chamfer except as noted.

Pour Steps monolithically with Back wall.

Bars indicated thus 59x2-#7 etc. indicates 59 Lines of Bars with 2 Lengths per line.

For Footing Plan and Sections B-B, C-C, D-D, E-E, H-H, J-J, K-K, L-L and M-M See Sht. No. S41

Min. Splice Length for #5 Bar 2'-2"

See Sheet S45 for location of 180 Bolts Embedded in Concrete Face of Pier.

Note A

Inside row of anchor bolts has to be set into the concrete before installation of the Truss.

Note B

10 Pairs-#4u607 (E) @ 12" E.F.
10 Pairs-#4u608 (E) & #4u609 (E) &
10-#4s610 (E) @ 12" Middle

Note C

14 Pairs-#4u611 (E) @ 12" E.F.
14 x 3 Pairs-#4u612 (E) &
14 Pairs-#4u613 (E) @ 12" Middle

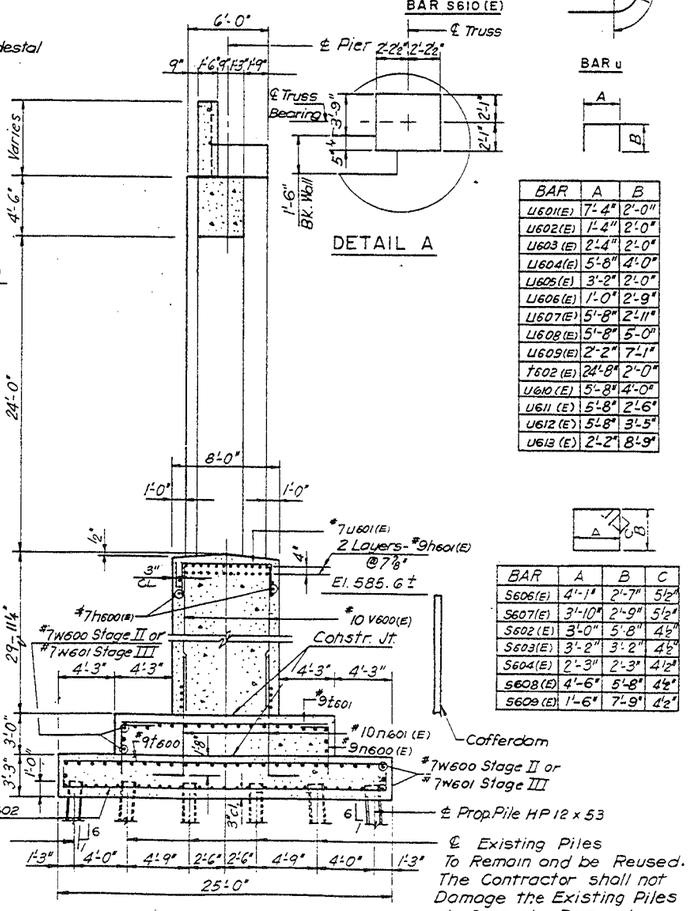


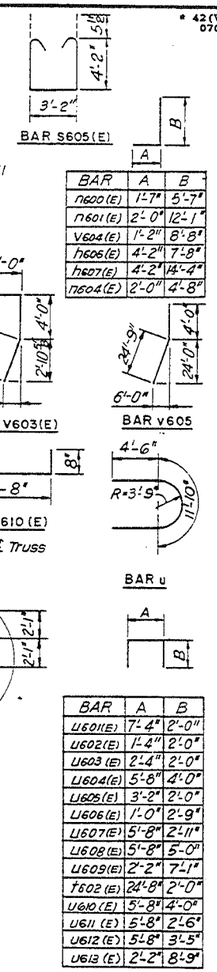


| BAR | A | B |
|---|---|---|
| h600(E) | 1'-7" | 5'-7" |
| h601(E) | 2'-0" | 12'-1" |
| V604(E) | 1'-2" | 8'-8" |
| h606(E) | 4'-2" | 7'-8" |
| h607(E) | 4'-2" | 14'-4" |
| h604(E) | 2'-0" | 4'-8" |

| BAR | A | B |
|---|---|---|
| U611(E) | 7'-4" | 2'-0" |
| U602(E) | 1'-4" | 2'-0" |
| U603 (E) | 2'-4" | 2'-0" |
| U604(E) | 5'-8" | 4'-0" |
| U605(E) | 3'-2" | 2'-0" |
| U606(E) | 1'-0" | 2'-9" |
| U607(E) | 5'-8" | 2'-11" |
| U608(E) | 5'-8" | 5'-0" |
| U609(E) | 2'-2" | 7'-1" |
| t602 (E) | 24'-8" | 2'-0" |
| U610 (E) | 5'-8" | 4'-0" |
| U611 (E) | 5'-8" | 2'-6" |
| U612 (E) | 5'-8" | 3'-5" |
| U613 (E) | 2'-2" | 8'-9" |

| BAR | A | B | C |
|---|---|---|---|
| S606(E) | 4'-1" | 2'-7" | 5½" |
| S607(E) | 3'-10" | 2'-9" | 5½" |
| S602 (E) | 3'-0" | 5'-8" | 4½" |
| S603(E) | 3'-2" | 3'-2" | 4½" |
| S604(E) | 2'-3" | 2'-3" | 4½" |
| S608 (E) | 4'-6" | 5'-8" | 4½" |
| S609 (E) | 1'-6" | 7'-9" | 4½" |



## BILL OF MATERIAL

| BAR | TOTAL NO. | CONSTR. STAGE II | CONSTR. STAGE III | SIZE | LENGTH | SHAPE |
|---|---|---|---|---|---|---|
| h600(E) | 472 | 236 | 236 | #7 | 2'-9" | |
| h601(E) | 96 | 48 | 48 | #9 | 30'-6" | |
| U611(E) | 112 | 56 | 56 | #4 | 10'-8" | |
| h603(E) | 16 | 8 | 8 | #8 | 33'-8" | |
| h604(E) | 40 | 20 | 20 | #5 | 28'-1" | |
| h605(E) | 4 | 2 | 2 | #5 | 21'-8" | |
| h606(E) | 20 | 10 | 10 | #6 | 11'-10" | |
| h607(E) | 20 | 10 | 10 | #6 | 18'-6" | |
| U612(E) | 168 | 84 | 84 | #4 | 12'-6" | |
| U613(E) | 56 | 28 | 28 | #4 | 19'-8" | |
| n600(E) | 294 | 149 | 145 | #9 | 7'-2" | |
| n601(E) | 478 | 241 | 237 | #10 | 13'-11" | |
| n602(E) | 220 | 110 | 110 | #11 | 18'-0" | |
| n603(E) | 64 | 32 | 32 | #10 | 14'-6" | |
| n604(E) | 8 | 4 | 4 | #11 | 6'-8" | |
| S608(E) | 48 | 24 | 24 | #4 | 21'-1" | |
| p600(E) | 12 | 6 | 6 | #11 | 39'-11" | |
| p601(E) | 12 | 6 | 6 | #11 | 25'-11" | |
| S609(E) | 48 | 24 | 24 | #4 | 19'-3" | |
| p602(E) | 12 | 6 | 6 | #8 | 30'-7" | |
| p603(E) | 12 | 6 | 6 | #11 | 31'-11" | |
| p604(E) | 12 | 6 | 6 | #11 | 32'-10" | |
| p605(E) | 12 | 6 | 6 | #8 | 36'-9" | |
| p606(E) | 12 | 6 | 6 | #11 | 39'-0" | |
| S610(E) | 20 | 10 | 10 | #4 | 6'-10" | |
| S607(E) | 48 | 24 | 24 | #5 | 14'-1" | |
| S602(E) | 96 | 48 | 48 | #4 | 18'-1" | |
| S603(E) | 96 | 48 | 48 | #4 | 13'-5" | |
| S604(E) | 96 | 48 | 48 | #4 | 9'-9" | |
| S605(E) | 126 | 63 | 63 | #5 | 12'-5" | |
| S606(E) | 48 | 24 | 24 | #5 | 14'-3" | |
| t600 | 132 | 67 | 65 | #9 | 24'-8" | |
| t601 | 134 | 68 | 66 | #9 | 16'-2" | |
| t602 | 256 | 130 | 126 | #9 | 28'-8" | |
| V606(E) | 96 | 48 | 48 | #7 | 6'-1" | |
| U600(E) | 120 | 60 | 60 | #7 | 21'-0" | |
| U601(E) | 126 | 63 | 63 | #7 | 11'-4" | |
| U602(E) | 28 | 14 | 14 | #7 | 5'-4" | |
| U603(E) | 28 | 14 | 14 | #7 | 6'-4" | |
| U604(E) | 48 | 24 | 24 | #6 | 13'-8" | |
| U605(E) | 126 | 63 | 63 | #5 | 7'-2" | |
| U606(E) | 110 | 55 | 55 | #5 | 6'-6" | |
| U607(E) | 80 | 40 | 40 | #4 | 11'-6" | |
| U608(E) | 40 | 20 | 20 | #4 | 15'-8" | |
| U609(E) | 40 | 20 | 20 | #4 | 16'-4" | |
| U610(E) | 20 | 10 | 10 | #6 | 13'-8" | |
| V600(E) | 482 | 241 | 241 | #10 | 29'-9" | |
| V601(E) | 180 | 90 | 90 | #11 | 28'-3" | |
| V602(E) | 64 | 32 | 32 | #10 | 28'-3" | |
| V603(E) | 12 | 6 | 6 | #6 | 14'-0" | |
| V604(E) | 220 | 110 | 110 | #7 | 9'-10" | |
| V605(E) | 40 | 20 | 20 | #11 | 28'-9" | |
| W600 | 146 | 146 | — | #7 | 34'-7" | |
| W601 | 146 | — | 146 | #7 | 33'-4" | |

| ITEM | UNIT | TOTAL | CONSTRUCTION STAGE II | CONSTRUCTION STAGE III |
|---|---|---|---|---|
| Cofferdam | Each | 2 | 1 | 1 |
| Reinf. Bars Epoxy Coated | Lbs. | 247,730 | 124,035 | 123,695 |
| Reinforcement Bars | Lbs. | 63,660 | 32,350 | 31,310 |
| Class X Concrete | Cu.Yds. | 2,083.7 | 1,047.9 | 1,035.8 |
| Furnishing Steel Piles HP12x53 | Lin.Ft. | 2,550 | 1,275 | 1,275 |
| Driving Steel Piles | Lin.Ft. | 2,550 | 1,275 | 1,275 |
| Test Piles Steel HP12x53 | Each | 2 | 1 | 1 |
| Concrete Removal | Cu.Yds. | 1821 | 926 | 895 |
| Cofferdam Excavation | Cu.Yds. | 1,425 | 669.3 | 1457.2 |

STATE OF ILLINOIS
DEPARTMENT OF TRANSPORTATION
PIER 4 DETAILS-I
FAI-94 OVER LITTLE CALUMET RIVER
COOK COUNTY

STA. 172+54.39 — SN 016-0158 (S.BOUND) SN 016-0159 (N.BOUND)

SCALE — DRAWN BY S.P. & B.A.

DATE NOV. 1991 — CHECKED BY J.M.

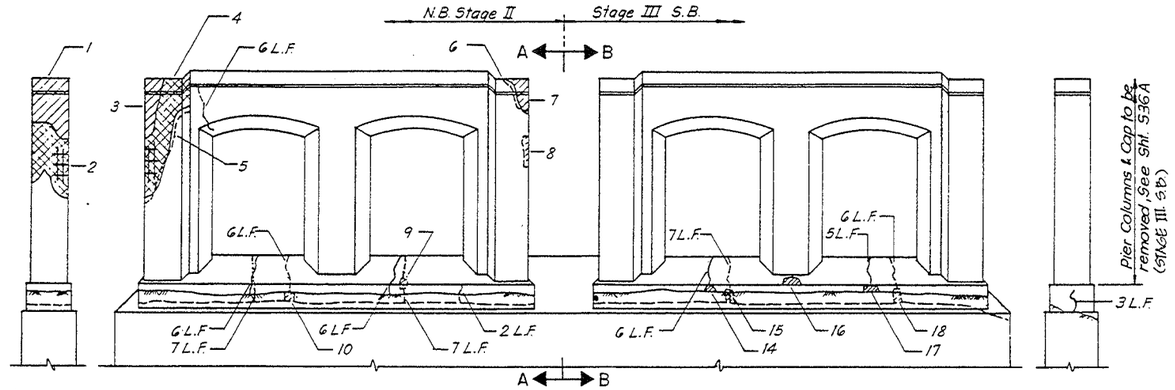


PIER 1
Elevation Looking South

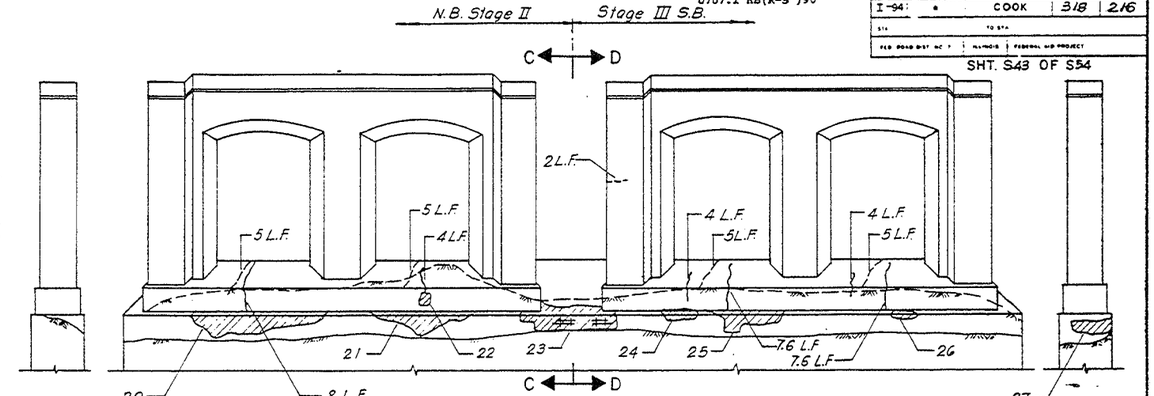


PIER 6
Elevation Looking South

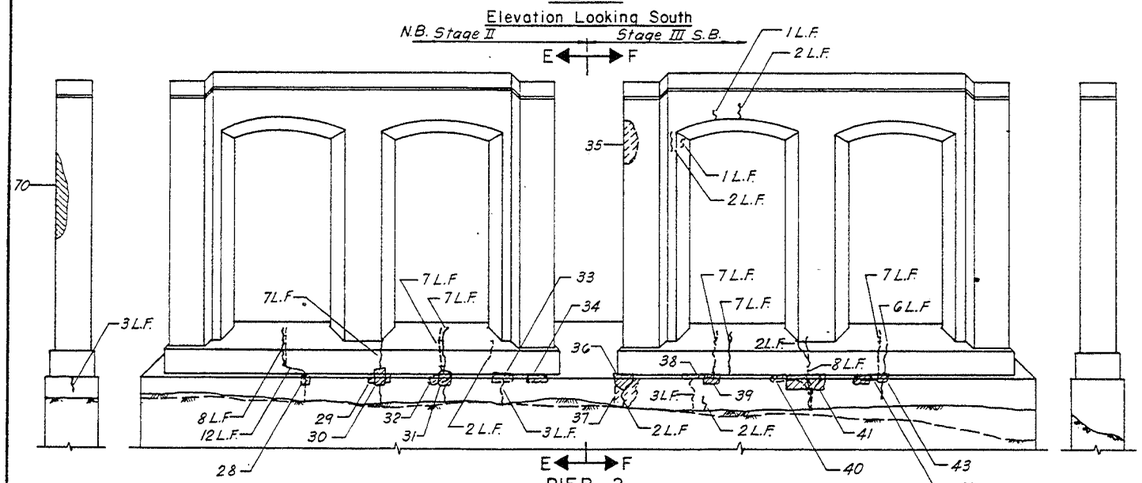


PIER 2
Elevation Looking South

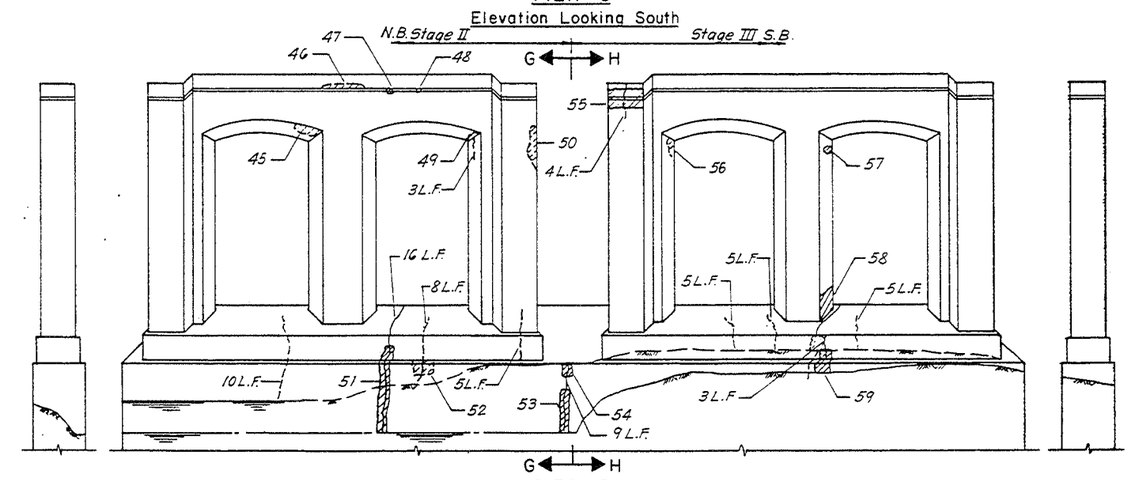


PIER 5
Elevation Looking South

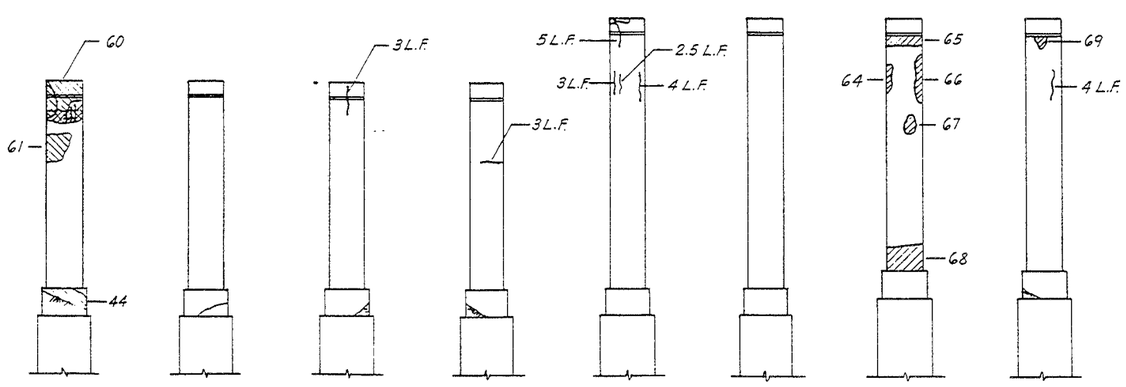

A - A  B - B  C - C  D - D  E - E  F - F  G - G  H - H

SECTIONS

## SUMMARY OF REPAIRS

| NO. | SIZE | SQ.FT. | NO. | SIZE | SQ.FT. | NO. | SIZE | SQ.FT. |
|---|---|---|---|---|---|---|---|---|
| 1 | 4×6 | 24 | 25 | 4×1 | 4 | 49 | 1×2 | * |
| 2 | 4×7 | 28 | 26 | 2×1 | * | 50 | 1×5 | 5 |
| 3 | 1.5×7 | 10.5 | 27 | 5×1.5 | * | 51 | 1×10 | 10 |
| 4 | 2×12 | 24 | 28 | 1×1 | * | 52 | 2×2 | 4 |
| 5 | 4×8 | 32 | 29 | 2×1 | 2 | 53 | 1×6 | 6 |
| 6 | 4×2 | 8 | 30 | 2×2 | 4 | 54 | 1×2 | 2 |
| 7 | 4×2 | 8 | 31 | 1×2 | 2 | 55 | 4×2 | 8 |
| 8 | 1×4 | 4 | 32 | 2×2 | 4 | 56 | 1×2 | * |
| 9 | 1×1 | * | 33 | 2×1 | * | 57 | 1×1 | * |
| 10 | 1×1 | * | 34 | 2×1 | * | 58 | 3×3 | 9 |
| | | | 35 | 2×4 | * | 59 | 2×2 | 4 |
| | | | 36 | 2×2 | 4 | 60 | 4×4 | 16 |
| | | | 37 | 2×3 | 6 | 61 | 3×3 | 9 |
| 14 | 1×1 | * | 38 | 3×1 | * | | | |
| 15 | 1×2 | * | 39 | 1×2 | 2 | | | |
| 16 | 2×1 | * | 40 | 5×2 | 10 | 64 | 1×3 | * |
| 17 | 2×1 | * | 41 | 4×2 | 8 | 65 | 4×1 | * |
| 18 | 1×2 | * | 42 | 3×1 | * | 66 | 1×6 | 6 |
| | | | 43 | 1×1 | * | 67 | 2×2 | * |
| 20 | 16×2 | 32 | 44 | 1×2 | 2 | 68 | 4×3 | 12 |
| 21 | 12×2 | 24 | 45 | 1×3 | * | 69 | 1×2 | * |
| 22 | 1×1 | * | 46 | 5×1 | * | 70 | 1.5×6 | 9 |
| 23 | 10×3 | 30 | 47 | 1×1 | * | | | |
| 24 | 2×1 | 2 | 48 | .6×.6 | * | | | |

* Depth of 1'2" or less.

## BILL OF MATERIAL

| ITEM | UNIT | TOTAL | CONST. STAGES II | CONST. STAGES III |
|---|---|---|---|---|
| Epoxy Crack Sealing | Lin.Ft. | 321 | 171 | 150 |
| Epoxy Mortar Repair | Cu.Ft. | 8.7 | 4.1 | 4.6 |
| Formed Conc. Repair (Depth ≤ 5") | Sq.Ft. | 236 | 172 | 39 |
| Formed Conc. Repair (Depth > 5") | Sq.Ft. | 165 | 151 | 14 |

LEGEND:

- Crack Sealing Near Side
- Crack Sealing Far Side
- Concrete Repair Area Near Side
- Concrete Repair Area Far Side

STATE OF ILLINOIS
DEPARTMENT OF TRANSPORTATION
PIER REPAIRS
FAI-94 OVER LITTLE CALUMET RIVER
COOK COUNTY

STA. 172-54.39
SN 016-0158 (S. BOUND)
SN 016-0159 (N. BOUND)

SCALE
DRAWN BY B.A.
DATE NOV. 1991
CHECKED BY J.M.

* 42(VB-10,12,HB-14,B-11) &
0707.1 HB(R-3 )90

| F.A. ROUTE | SECTION | COUNTY | TOTAL SHEETS | SHEET NO. |
|---|---|---|---|---|
| I-94 | * | COOK | 318 | 217 |
| STA. | | TO STA. | | |
| FED. ROAD DIST. NO. 7 | ILLINOIS | FEDERAL AID PROJECT | | |

SHT. S44 OF S54

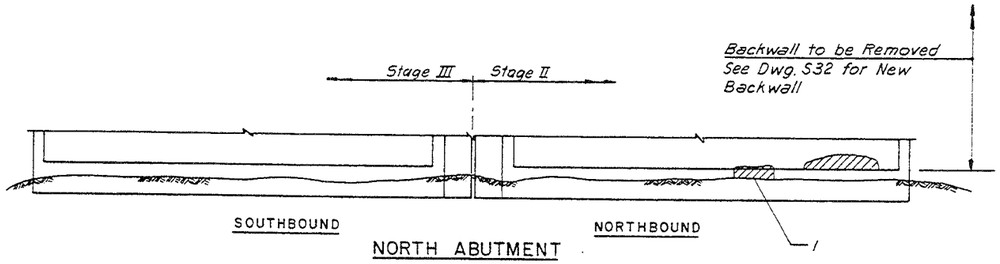


NORTH ABUTMENT
Partial Elevation Looking North

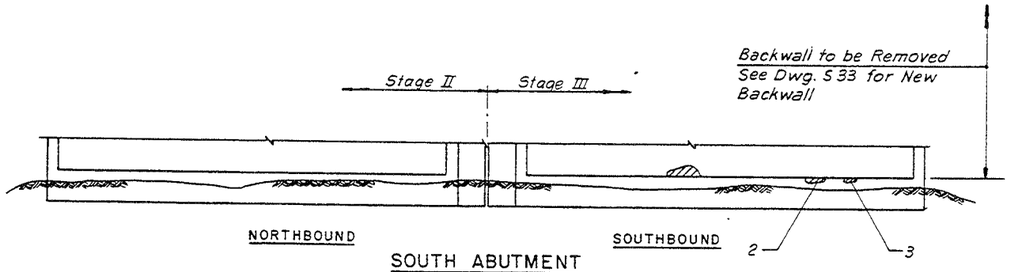


SOUTH ABUTMENT
Partial Elevation Looking South

| SUMMARY OF MAT'L | | |
|---|---|---|
| NO. | SIZE (FT) | SQ. FT. |
| 1 | 4×2 | 8 |
| 2 | 1×.8 | * |
| 3. | 1×.6 | * |
| | | |
| | | |
| | | |
| | | |
| | | |

* Depth of 1½" or less

| BILL OF MATERIAL | | | | |
|---|---|---|---|---|
| ITEM | UNIT | TOTAL | CONST. STAGES II | CONST. STAGES III |
| Formed Conc. Repair (Depth ≤ 5") | Lin. Ft. | 8 | 8 | |
| Epoxy Mortar Repair | Cu. Ft. | .20 | | .20 |
| | | | | |

LEGEND:

Concrete Repair Area Near Side

STATE OF ILLINOIS
DEPARTMENT OF TRANSPORTATION
ABUTMENT REPAIRS
F.A.I.-94 OVER LITTLE CALUMET RIVER
COOK COUNTY
STA. 172 + 54.39
SN 016-0158 (S. BOUND)
SN 016-0159 (N. BOUND)
SCALE
DRAWN BY P.G.
DATE NOV. 1991
CHECKED BY J.M.

* 42(VB-10,12,HB-14,B-11) &
0707.1 HB(R-3)90

| ROUTE | SECTION | COUNTY | TOTAL SHEETS | SHEET NO. |
|---|---|---|---|---|
| I-94 | * | COOK | 318 | 218 |
| STA. | TO STA. | | | |
| FED. ROAD DIST. NO. 1 | ILLINOIS | FEDERAL AID PROJECT | | |

SHT. S45 OF S54

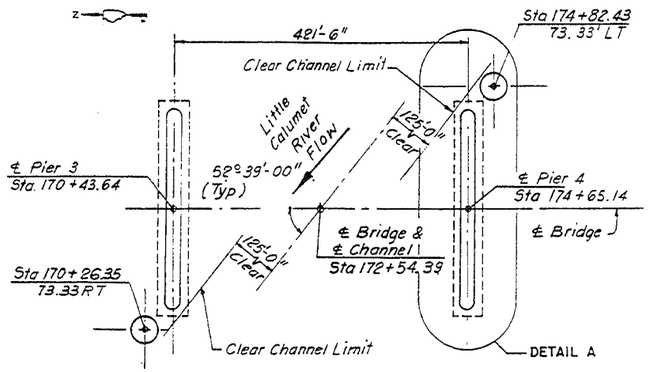


DOLPHIN LAYOUT

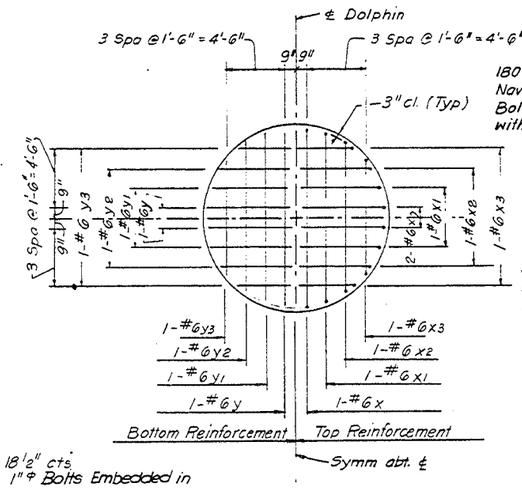


SECTION A-A

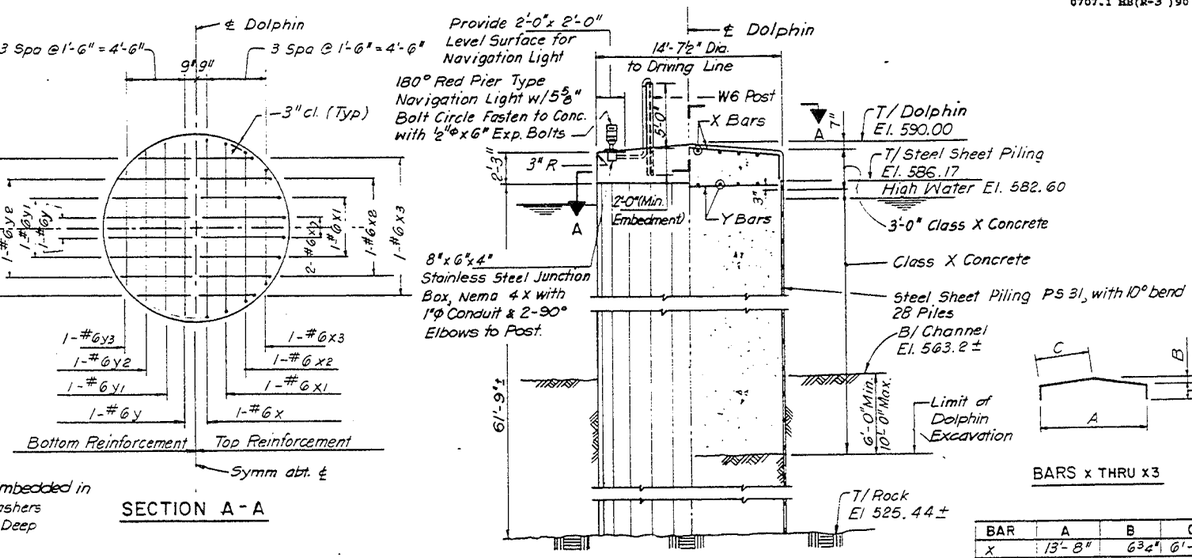


DOLPHIN ELEVATION




BARS x THRU x3

| BAR | A | B | C |
|---|---|---|---|
| X | 13'-8" | 6¾" | 6'-10" |
| X1 | 13'-0" | 6½" | 6'-6" |
| X2 | 11'-6" | 5¾" | 5'-10" |
| X3 | 8'-11" | 4½" | 4'-5½" |

BILL OF MATERIAL *

| BAR | NO. | SIZE | LENGTH | SHAPE |
|---|---|---|---|---|
| X | 8 | #6 | 18'-8" | |
| X1 | 8 | #6 | 18'-0" | |
| X2 | 8 | #6 | 16'-8" | |
| X3 | 8 | #6 | 13'-11" | |
| | | | | |
| Y | 8 | #6 | 13'-8" | |
| Y1 | 8 | #6 | 13'-0" | |
| Y2 | 8 | #6 | 11'-8" | |
| Y3 | 8 | #6 | 8'-11" | |

| ITEM | UNIT | QUANTITY |
|---|---|---|
| Dolphin Excavation | C.Y. | 50 |
| | | |
| Class X Concrete | C.Y. | 215 |
| Treated Timber | F.B.M | 8150 |
| Furnishing Creosoted Piles | L.F. | 45 |
| Driving Timber Piles | L.F. | 45 |
| Reinforcement Bars | Lbs. | 690 |
| Steel Sheet Piling (Sp.) | S.F. | 2840 |
| Bolts Embedded in Concrete, 1"Φ | Ea. | 180 |

* Quantities are For One Dolphin and One Fender System

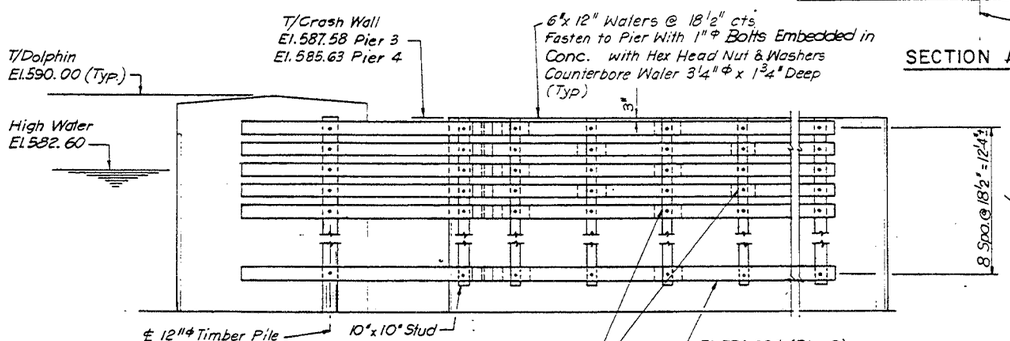


ELEVATION

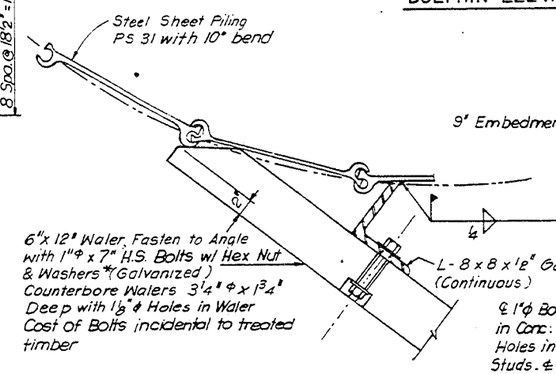


DETAIL B

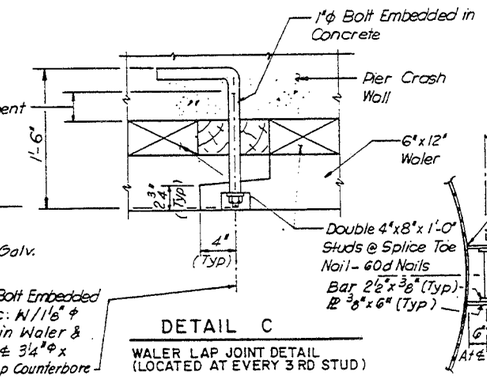


DETAIL C

WALER LAP JOINT DETAIL
(LOCATED AT EVERY 3 RD STUD)

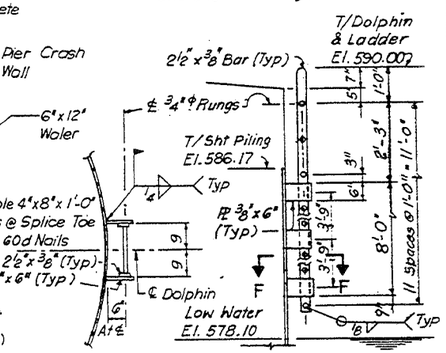


SECTION F-F

DETAIL E

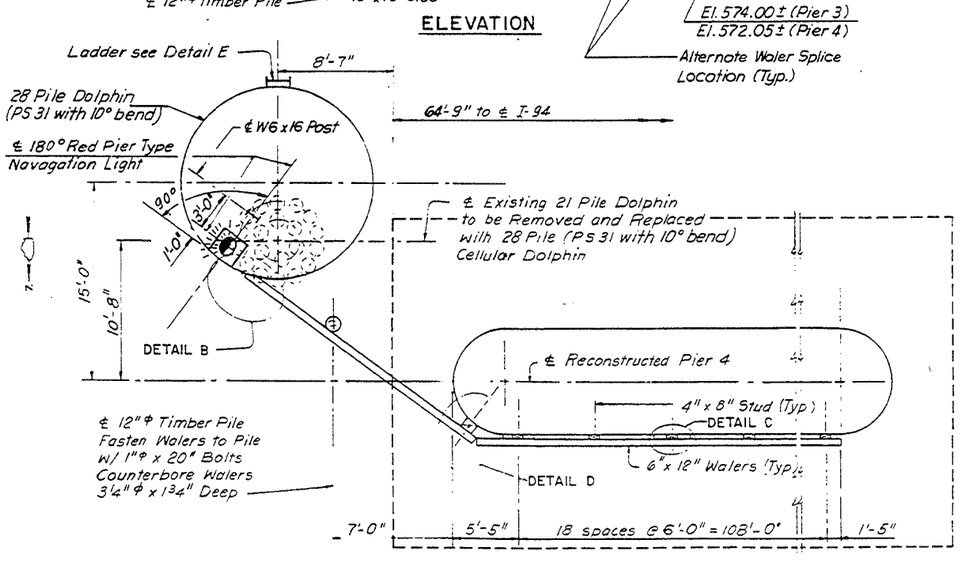


DETAIL A

Pier 4 Shown - Pier 3 Similar

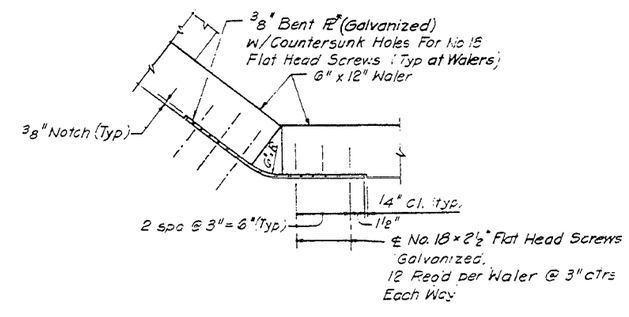


DETAIL D

NOTES:

All Expansion Bolts, Nuts, Washers Plates and Angles shall be *Galvanized M232.
All Timber Walers, Studs and Piles shall be Creosoted Yellow Pine.
* Galvanizing shall comply with AASHTO M232 for hot dip process or with ASTM M298 Class 50 for Mechanical Plating Method.

STATE OF ILLINOIS
DEPARTMENT OF TRANSPORTATION
DOLPHIN & FENDER DETAILS
F.A.I.-94 OVER LITTLE CALUMET RIVER
COOK COUNTY

STA. 172+54.39
SN 016-0158 (S. BOUND)
SN 016-0159 (N. BOUND)

SCALE
DRAWN BY J.C.
DATE NOV. 1991
CHECKED BY J.M.

* 42(VB-10,12,HB-14,B-11) & 0707.1 HB(R-3)90

| F.A. ROUTE | SECTION | COUNTY | TOTAL SHEETS | SHEET NO |
|---|---|---|---|---|
| I-94 | * | COOK | 318 | 219 |
| STA. | TO STA. | | | |
| FED. ROAD DIST. NO. 7 | ILLINOIS | FEDERAL AID PROJECT | | |

SHT. S46 OF S54

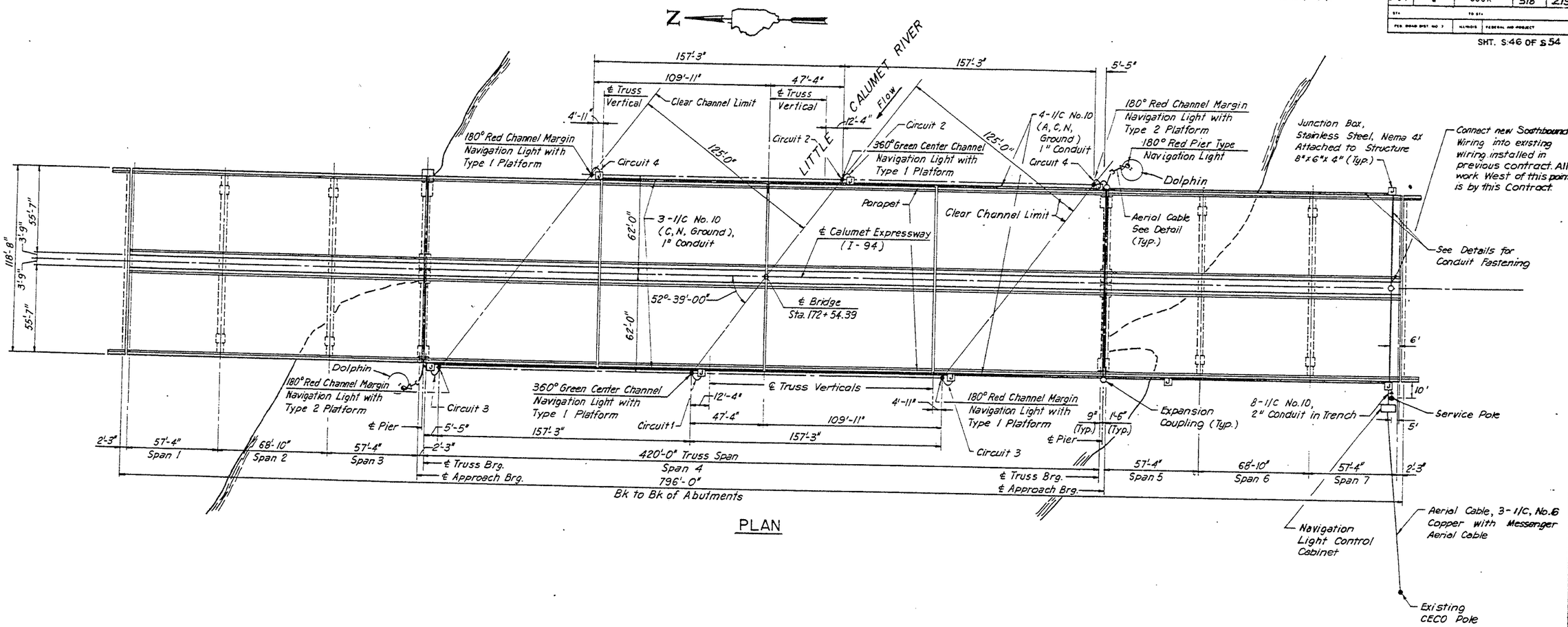


PLAN

NOTES:

1. For Platform Details See Sht. No. S-47
2. For Electrical Details, See Sht. Nos. 118 - 119.

STATE OF ILLINOIS
DEPARTMENT OF TRANSPORTATION

NAVIGATION LIGHTS – PLAN
F.A.I.-94 OVER LITTLE CALUMET RIVER
COOK COUNTY

STA. 172 + 54.39
SN 016-0158 (S. BOUND)
SN 016-0159 (N. BOUND)

SCALE 1" = 30'
DRAWN BY P.G.

DATE JUNE 1991
CHECKED BY J.M.

| F.A. ROUTE | SECTION | COUNTY | TOTAL SHEETS | SHEET NO. |
|---|---|---|---|---|
| I-94 | * | COOK | 318 | 220 |
| STA. | | TO STA. | | |
| FED. ROAD DIST. NO. 7 | ILLINOIS | FEDERAL AID PROJECT | | |

* 42(VB-10,12,HB-14,B-11) & 0707.1 HB(R-3)90

SHT. S47 OF S54

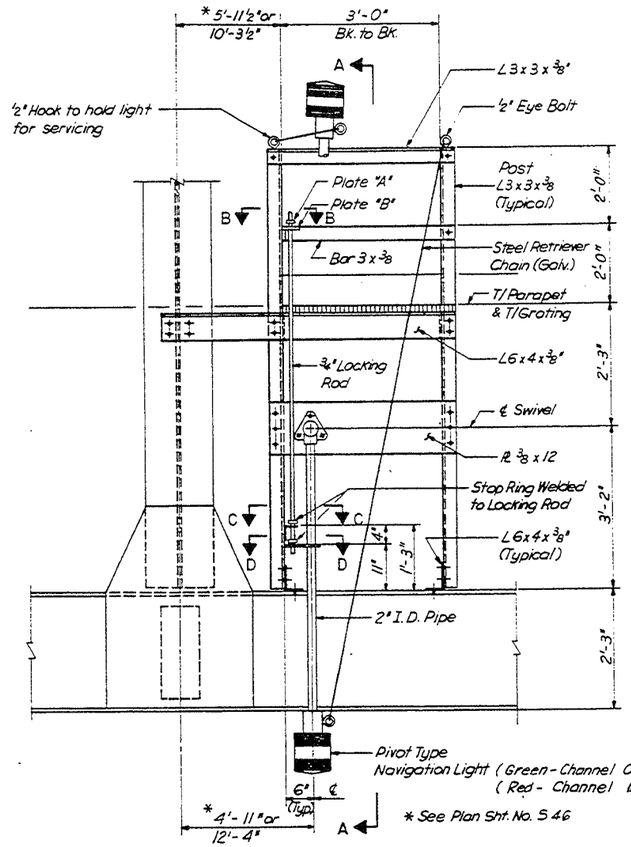


ELEVATION TYPE-1 PLATFORM
(4 REQUIRED)

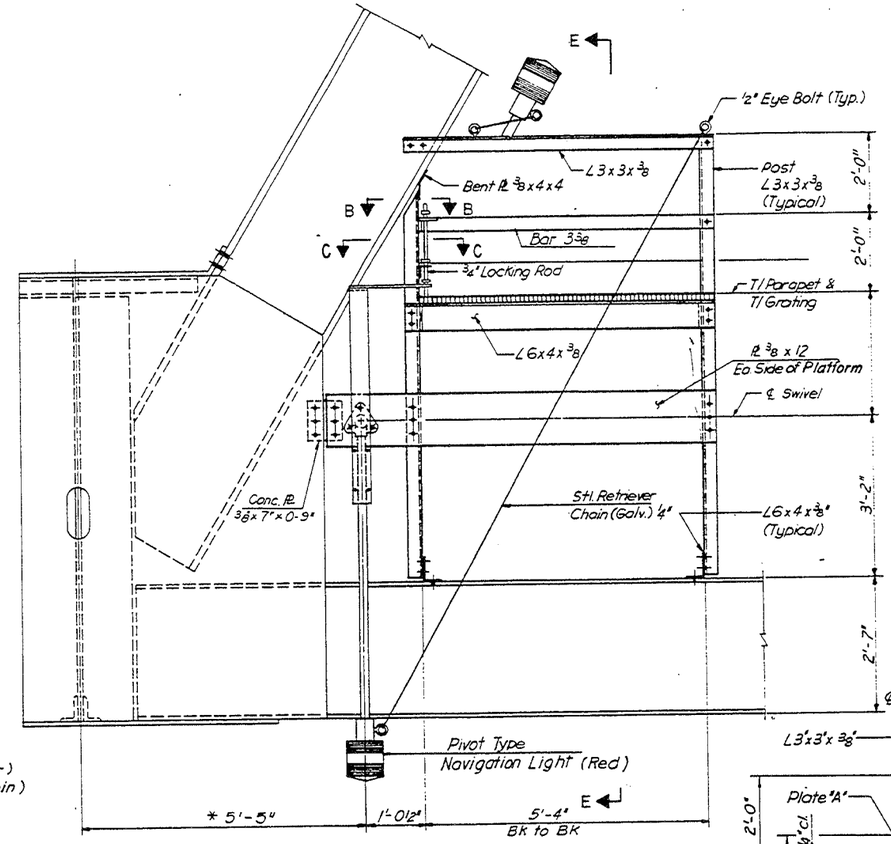


ELEVATION TYPE-2 PLATFORM
(2 REQUIRED)

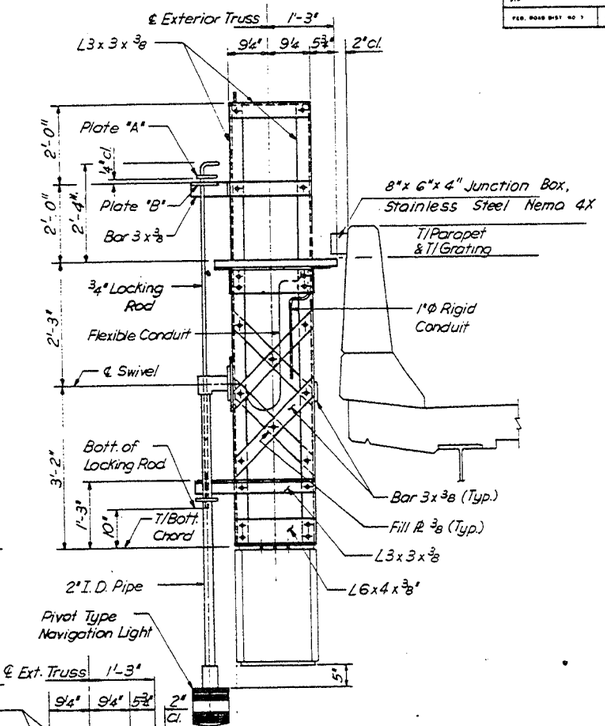


SECTION A-A

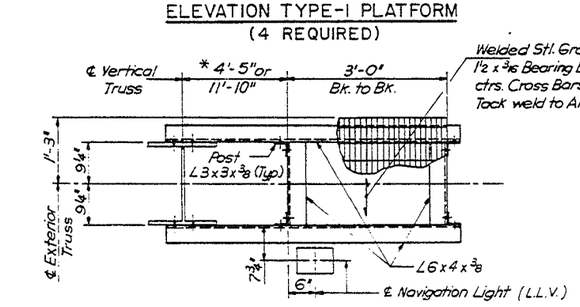


PLAN TYPE-1 PLATFORM

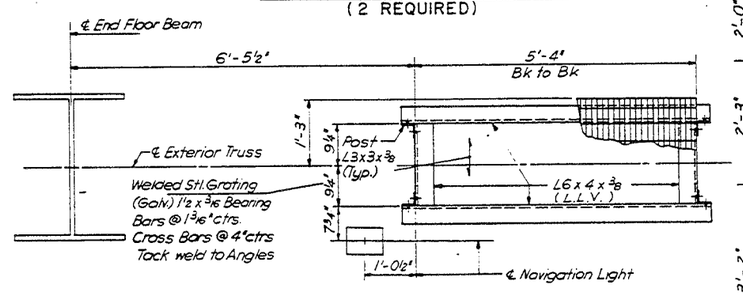


PLAN TYPE-2 PLATFORM

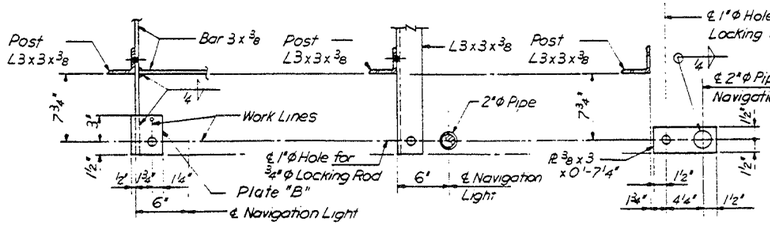


SECTION B-B SECTION C-C SECTION D-D

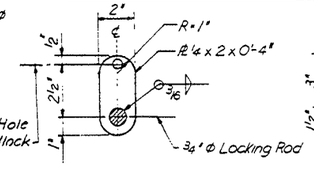


PLATE "A"

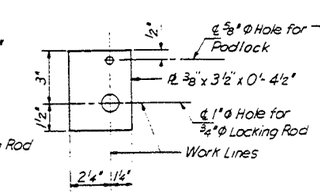


PLATE "B"

NOTES:
All Bolts to be ¾"Φ H.S., Holes to be 13/16" Φ Except as Noted.

STATE OF ILLINOIS
DEPARTMENT OF TRANSPORTATION
NAVIGATION LIGHTING DETAILS - II
F.A.I.-94 OVER LITTLE CALUMET RIVER
COOK COUNTY
STA. 172 + 54.39 SN 016-0158 (S. BOUND)
SN 016-0159 (N. BOUND)
SCALE DRAWN BY EBP
DATE NOV. 1991 CHECKED BY J. M.

# STATE OF ILLINOIS
# DEPARTMENT OF TRANSPORTATION

| F.A.I. ROUTE | SECTION | COUNTY | TOTAL SHEETS | SHEET NO. |
|---|---|---|---|---|
| I-94 | * | COOK | 318 | 221 |

* 42(VB-10,12,HB-14,B-11) & 0707-1 HB(R-3)90

SHT 548 OF 554

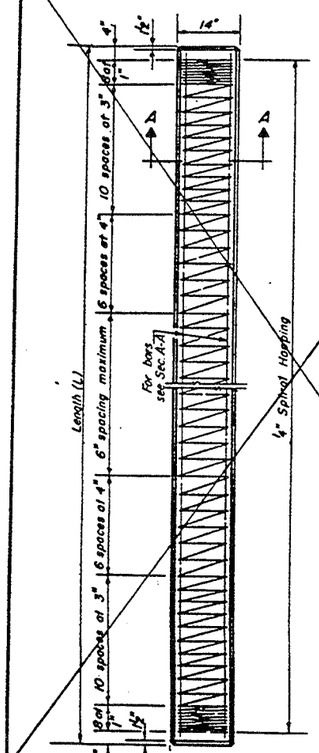


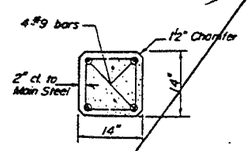


SECTION A-A
FOR PILES UNDER 45' LONG

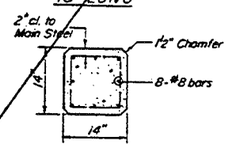


SECTION A-A
FOR PILES 45' OR MORE

Handling: For Pile lengths up to 45', use two slings placed at a distance of 0.21 L from each end. For Piles longer than 45' use three slings placed at a distance of 0.12 L from each end and at mid point of pile.

DETAIL OF PRECAST CONCRETE PILES

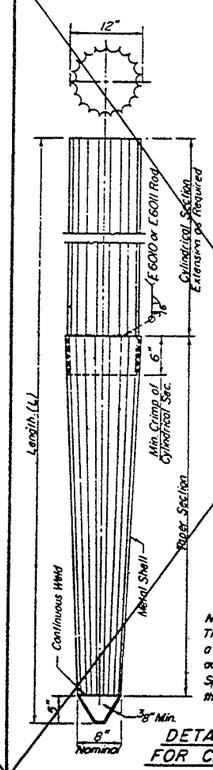


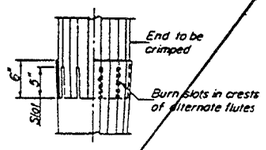


FIELD CRIMP DETAIL

Note: 6" Crimp shall either be supplied on the cylindrical section or made in the field as detailed.

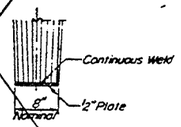


OPTIONAL FLAT END

ALLOWABLE TAPER SECTIONS

10' Length - Taper 1" in 2'-6"
17' Length - Taper 1" in 4'-0"
25' Length - Taper 1" in 7'-0"
30' Length - Taper 1" in 7'-0"

NOTE:
The thickness of the shell shall be 0.1495 inches with a tolerance of 5%. The shell shall be in accordance with Article 710.05 (a) of the Standard Specification except that minimum yield strength for the steel after cold working shall be 50,000 psi.

DETAIL OF TAPERED METAL SHELLS FOR CAST IN PLACE CONCRETE PILES

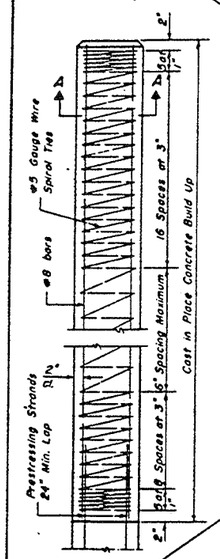


PILE BUILD UP

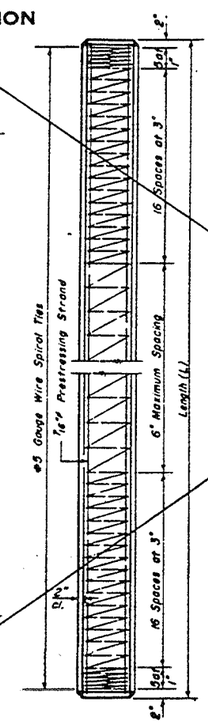


PILE PLAN

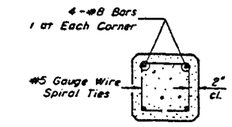


SECTION A-A

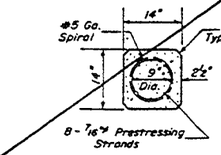


SECTION THRU PILE

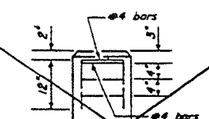


ELEVATION
(End Reinforcement)

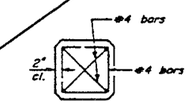


PLAN
(End Reinforcement)

DESIGN STRESSES

f'c = 5,000 psi.
f'ci = 4,000 psi.
f's = 270,000 psi. (31,000 lbs.-7/16"ϕ or 41,300 lbs.-½"ϕ)
f'si = 189,000 psi. (21,700 lbs.-7/16"ϕ or 28,900 lbs.-½"ϕ)

NOTES

Prestressing steel shall be non-galvanized extra high strength stress-relieved 7-wire strand. The nominal diameter shall be 7/16" and the minimum nominal cross-sectional area shall be 0.115 sq.in. or the equivalent 6-½"ϕ strands with a cross-sectional area of 0.153 sq.in. may be used.

For Pile lengths up to 65', use two slings placed at a distance of 0.21 L * from each end. For Piles longer than 65', use three slings placed at a distance of 0.12 L * from each end and at mid-point of pile. * L = Over all length of pile to be handled.

PRECAST PRESTRESSED CONCRETE PILE

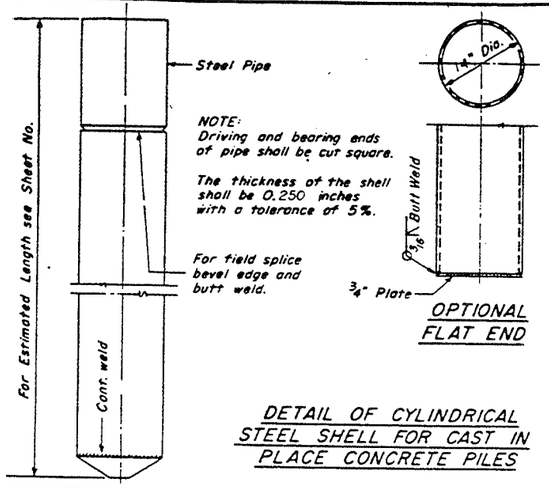


NOTE:
Driving and bearing ends of pipe shall be cut square.

The thickness of the shell shall be 0.250 inches with a tolerance of 5%.

For field splice bevel edge and butt weld.

OPTIONAL FLAT END

DETAIL OF CYLINDRICAL STEEL SHELL FOR CAST IN PLACE CONCRETE PILES

| |
|---|
| DESIGNED |
| CHECKED |
| DRAWN |
| CHECKED |

X-3 8-30-80

The cost of Reinforcement is incidental to the cost of furnishing piles.

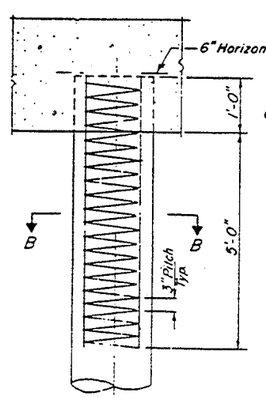


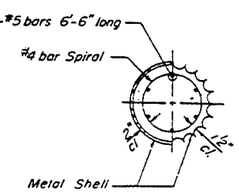


SECTION B-B

~~Reinforcement in top of pile shaft be omitted under footings when placed in natural ground.~~

DETAIL OF REINFORCEMENT FOR METAL SHELLS

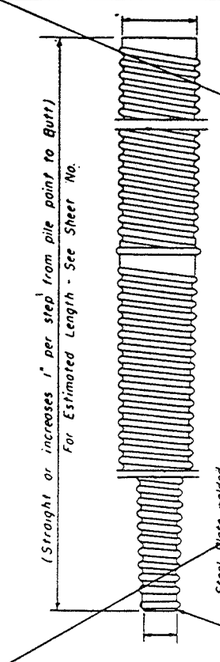


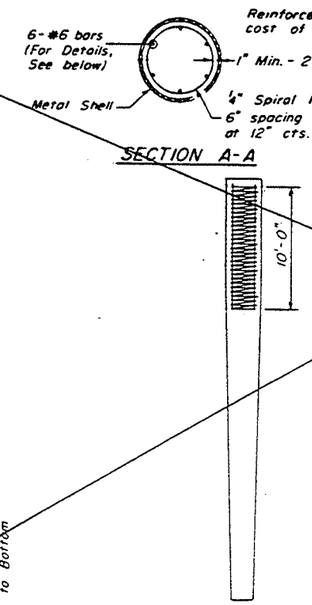


SECTION A-A

Reinforcement is incidental to the cost of furnishing piles.

PILE REINFORCEMENT

At least 10% of the length of pile shall have a Butt diameter equal to or greater than 12" Gauges are furnished to suit soil conditions (16 Gauge avg. min.)

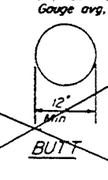


BUTT

POINT
(Applies only to Step Taper type pile)

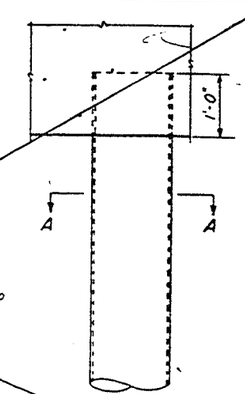


DETAIL OF MANDREL DRIVEN STRAIGHT OR STEP-TAPER PILES FOR CAST IN PLACE CONCRETE PILES

STATE OF ILLINOIS
DEPARTMENT OF TRANSPORTATION
CONCRETE PILES
F.A.I.-94 OVER LITTLE CALUMET RIVER
COOK COUNTY

STA. 172 + 54.39
SN 016-0158 (S. BOUND)
SN 016-0159 (N. BOUND)

SCALE
DRAWN BY P.G.
DATE NOV. 1991
CHECKED BY J.M.

* 42(VB-10,12,HB-14,B-11) &
0707.1 HB(R-3)90

| F.A. ROUTE | SECTION | COUNTY | TOTAL SHEETS | SHEET NO. |
|---|---|---|---|---|
| I-94 | * | COOK | 318 | 222 |
| STA. | | TO STA. | | |
| FED. ROAD DIST. NO. 7 | ILLINOIS | FEDERAL AID PROJECT | | |

SHT. S49 OF S54

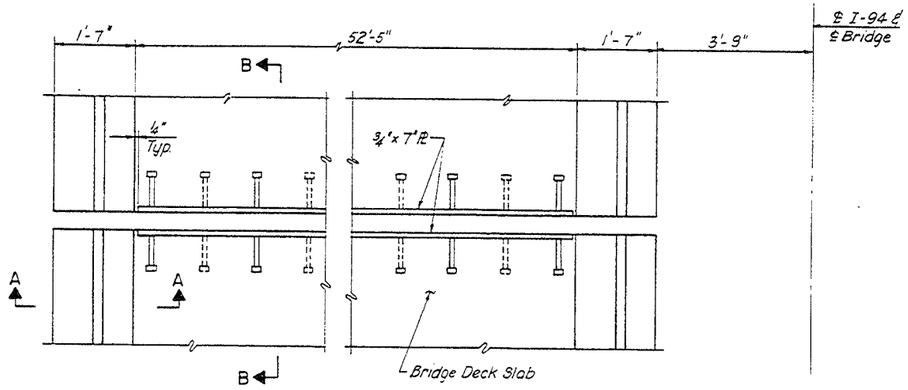


PLAN

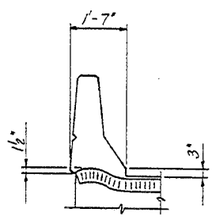


SECTION A-A

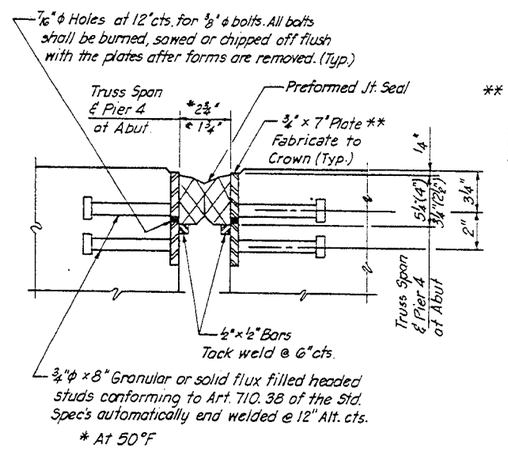


** Furnish in segments of 20 ft. maximum length. Maximum space between installed segments shall be 3/16". Seal space with Silicone Sealant suitable for Structural Steel.

SECTION B-B

Note: After Fabrication all surfaces of the steel plates shall be given one shop coat of paint specified for Structural Steel.

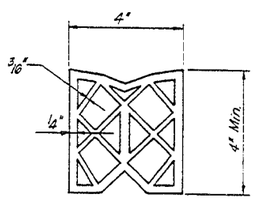


(4")
TRUSS SPAN & PIER 4

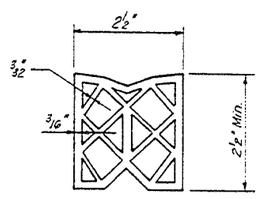


(2 1/2")
AT ABUTMENTS

PREFORMED JOINT SEAL DETAILS

| BILL OF MATERIAL | | | | |
|---|---|---|---|---|
| ITEM | UNIT | TOTAL | CONSTR. STAGE | |
| | | | II | III |
| Preformed Joint Seal (2 1/2") | Lin. Ft. | 222.6 | 111.3 | 111.3 |
| Preformed Joint Seal (4") | Lin. Ft. | 445.2 | 222.6 | 222.6 |

STATE OF ILLINOIS
DEPARTMENT OF TRANSPORTATION
PREFORMED JOINT SEAL DETAILS
F.A.I-94 OVER LITTLE CALUMET RIVER
COOK COUNTY
STA. 172+54.39
SN 016-0158 (S.BOUND)
SN 016-0159 (N.BOUND)
SCALE
DRAWN BY S.P.
DATE NOV. 1981
CHECKED BY J.M.

STATE OF ILLINOIS
DEPARTMENT OF TRANSPORTATION

* 42(VB-10,12,HB-14,B-11) & 0707.1 HB(R-3 )90

| ROUTE NO. | SECTION | COUNTY | TOTAL SHEETS | SHEET NO. |
|---|---|---|---|---|
| F.A.I. I-94 | * | COOK | 318 | 224 |
| FED. ROAD DIST. NO. 7 | | ILLINOIS | FED. AID PROJECT- | |

SHEET NO. 551 OF 54 SHEETS

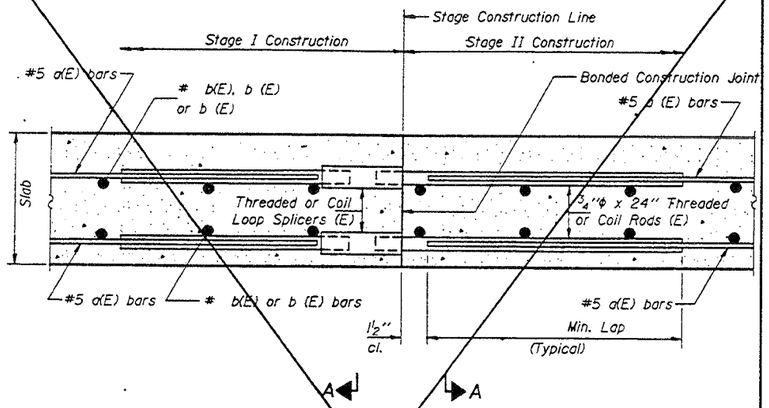


SECTION THRU SLAB

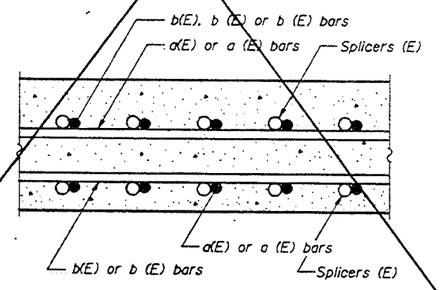


SECTION A-A

SPLICER DETAILS
(No. Req'd. ——)

Cost incidental to Reinforcement Bars (Epoxy Coated).

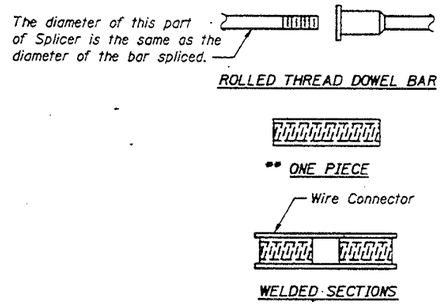


SPLICER ALTERNATIVES
** Heavy Hex Nuts conforming to ASTM A 563, Grade C, D or DH may be used.

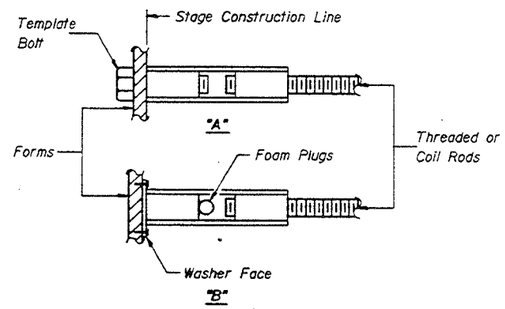


INSTALLATION AND SETTING METHODS
"A" : Set splicer by means of a template bolt.
"B" : Set splicer by nailing to wood forms or cementing to steel forms.
(E) : Indicates epoxy coating.

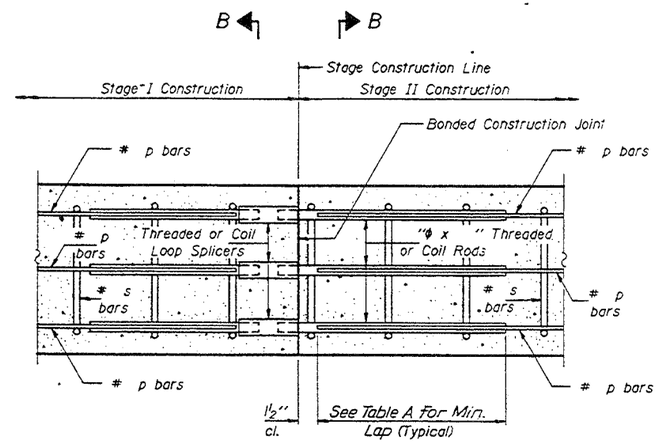


SECTION THRU ABUTMENTS AND PIERS
No epoxy coating required.

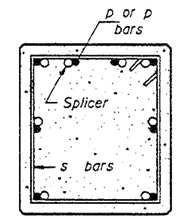


SECTION B-B

SPLICER DETAILS

Cost incidental to Reinforcement Bars.

| TABLE A | | |
|---|---|---|
| MINIMUM LAPS | | NO. REQ'D. |
| BAR | LAP | |
| #5 | 2'-2" | 24 |
| #7 | 3'-3" | 264 |
| #9 | 5'-5" | 134 |
| #11 | 8'-5" | 4 |

NOTES

Steel Splicer (Coupler) assembly shall be of an approved type and shall develop in tension at least 125 percent of the yield strength of the lapped reinforcement bars.

Steel Splicer rods shall be of minimum 60 ksi yield strength, threaded or coiled full length and have effective tensile stress area equal to or greater than that of the lapped reinforcement bars.

All reinforcement bars shall be lapped and tied to the splicer rods.

Splicer (coupler) assembly in the slab shall be epoxy coated in accordance with the requirements for reinforcement bars.

Other systems of similar design may be submitted to the Engineer for approval. Approval shall be based on certified test results from an approved testing laboratory that the proposed splicer (coupler) assembly satisfies the following requirements:

1. Minimum Capacity (Tension in kips) $= 1.25 \times f_y \times A_t$
2. Minimum *Pull-out Strength (Tension in kips) $= 1.25 \times fs_{allow} \times A_t$

Where $f_y$ = Yield strength of lapped reinforcement bars in ksi.
$fs_{allow}$ = Allowable tensile stress in lapped reinforcement bars in ksi (Service Load)
$A_t$ = Tensile stress area of lapped reinforcement bars.
* = 28 day concrete

Typical Splicer (Coupler) Assembly Sizes:

| | | |
|---|---|---|
| In Slabs | #5 bar lap with 3/4"φ Splicer (Coupler) x 2'-0" Splicer Rods | Minimum Capacity = 23.0 kips-tension<br>Minimum Pull-out Strength = 9.2 kips-tension |
| In Sub-Structure | #7 bar lap with 1"φ Splicer (Coupler) x 3'-5" Splicer Rods | Minimum Capacity = 45.1 kips-tension<br>Minimum Pull-out Strength = 18.0 kips-tension |
| | #8 bar lap with 1 1/4"φ Splicer (Coupler) x 4'-6" Splicer Rods | Minimum Capacity = 58.9 kips-tension<br>Minimum Pull-out Strength = 23.6 kips-tension |

STATE OF ILLINOIS
DEPARTMENT OF TRANSPORTATION
BAR SPLICER DETAILS
FAI-94 OVER LITTLE CALUMET RIVER
COOK COUNTY
STA 172+54.39
SN 016-0158 (S. BOUND)
SN 016-0159 (N. BOUND)
SCALE
DRAWN BY K.C
DATE NOV. 1981
CHECKED BY J.M.

The Illinois Coil-Lock Anchor Bolt is a proprietary item which is the property of the Illinois Department of Transportation. Use, reproduction or disclosure without express written permission is prohibited and protected under Federal copyright laws. The production and the fabrication of this bolt for use on highway projects in the State of Illinois shall be permitted and there shall be no incurred charges or fees to the manufacturer or the fabricator for producing or fabricating this bolt.



| D | E | H | K |
|---|---|---|---|
| 1" | 1 1/16" | 9/16" | 1 3/32" |
| 1 1/2" | 1 5/8" | 1 5/16" | 2 1/8" |
| 2" | 2 1/8" | 1 9/16" | 2 7/8" |
| 2 1/2" | 2 5/8" | 2 5/8" | 3 3/8" |
| 1 3/4" | 2" | 1 9/16" | 2 1/2" |
| 1 1/4" | 1 3/8" | 1 1/16" | 2" |
| | | | |

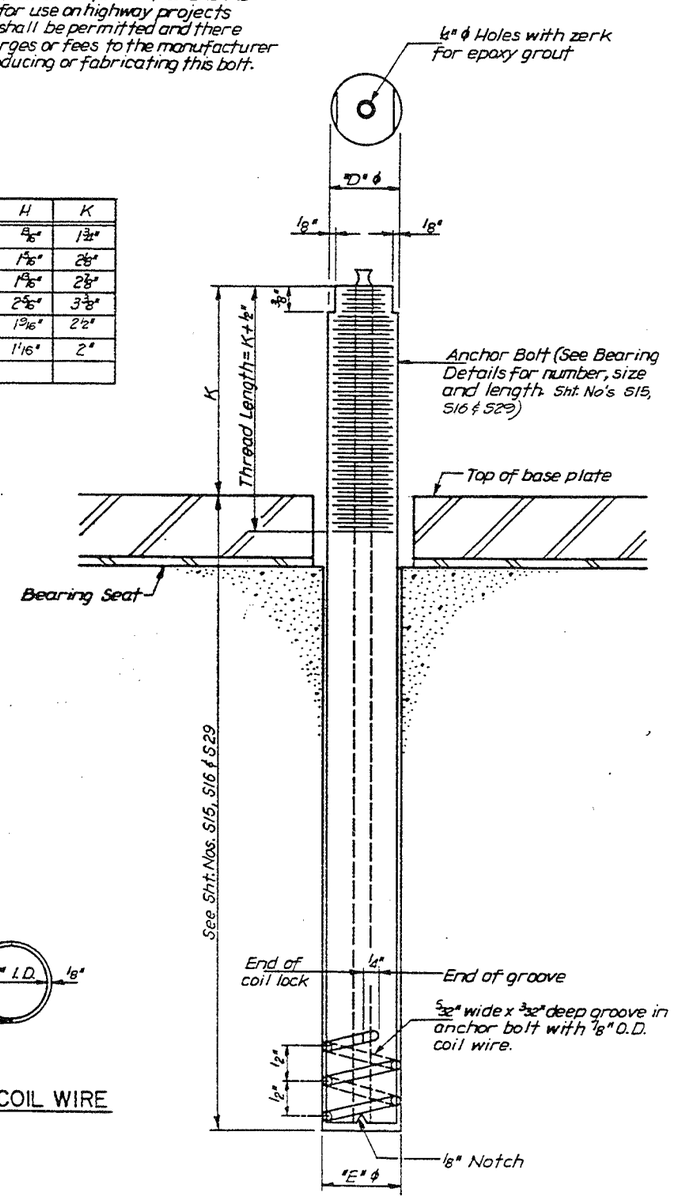


ILLINOIS COIL-LOCK ANCHOR BOLT

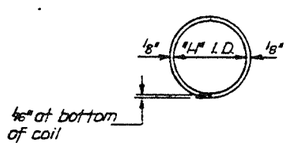


PLAN-COIL WIRE

## MATERIALS FOR ILLINOIS COIL-LOCK ANCHOR BOLT

The anchor bolt shall be fabricated from cold drawn or hot finished seamless carbon steel mechanical tubing conforming to ASTM A519, Grade 1026 and supplied with hexagonal nuts and cut washers.

The coil wire shall be made of any suitable soft steel wire.

The finished anchor bolt shall be cleaned of rust and other foreign materials and wrapped or packaged to prevent contamination until they are installed.

The epoxy grout shall be a two-component, epoxy resin bonding system conforming to ASTM C881, Type I, Grade 1 and of a Class suitable for the temperature at installation.

## INSTALLATION PROCEDURE FOR THE ILLINOIS COIL-LOCK ANCHOR BOLT

1. With the coil wire in place, the bolt shall be inserted into the hole and turned clockwise to a snug fit in the hole. Nut and washer shall be placed on the bolt. The nut shall be tensioned until the steel base plates are held securely to the concrete bearing seat.
2. Epoxy grout shall be pumped through the zerk fitting with a pressure gun. Pumping shall continue until the epoxy overflows the hole around the bolt shank. After pumping is discontinued, excess epoxy shall be immediately wiped off.

## ALTERNATE ANCHOR BOLTS

The Contractor may use, at his option, the capsule or the adhesive cartridge type anchor rods that have been previously tested and given a prior approval by the Department. The Contractor shall install these anchor rods in pre-drilled holes in accordance with the manufacturer's recommendations and procedures.

The capsule or the adhesive cartridge type anchor rods shall be a two part system composed of:

1. A threaded rod stud with nut and washer conforming to ASTM A307.
2. A sealed glass capsule or a sealed glass adhesive cartridge containing premeasured amounts of the adhesive chemical.

## GENERAL NOTES

Holes in the masonry for anchor bolts shall be drilled through the base plates to the diameter and depth shown or in accordance with the manufacturer's recommendation after beams or girders have been erected and adjusted.

Prior to setting the bolts, the holes shall be dry and all dust and loose particles shall be removed by the use of compressed air or vacuuming.

The anchor bolts, furnished and installed and including the epoxy grout or capsules shall not be paid for separately but shall be included in the unit bid price for "Furnishing and Erecting Structural Steel".

STATE OF ILLINOIS
DEPARTMENT OF TRANSPORTATION
ILL. COIL-LOCK ANCHOR BOLT
FAI.-94 OVER LITTLE CALUMET RIVER
COOK COUNTY
STA. 172 + 54.39 SN 016-0158 (S. BOUND)
SN 016-0159 (N. BOUND)
SCALE
DRAWN BY
DATE NOV. 1991
CHECKED BY J.M.

STATE OF ILLINOIS
DEPARTMENT OF TRANSPORTATION

# 42(VB-10,12,HB-14,B-11) & 0707.1 HB(R-3)90

| F.A. ROUTE | SECTION | COUNTY | TOTAL SHEETS | SHEET NO. |
|---|---|---|---|---|
| I-94 | 6 | COOK | 318 | 226 |

SHT S53 OF S54

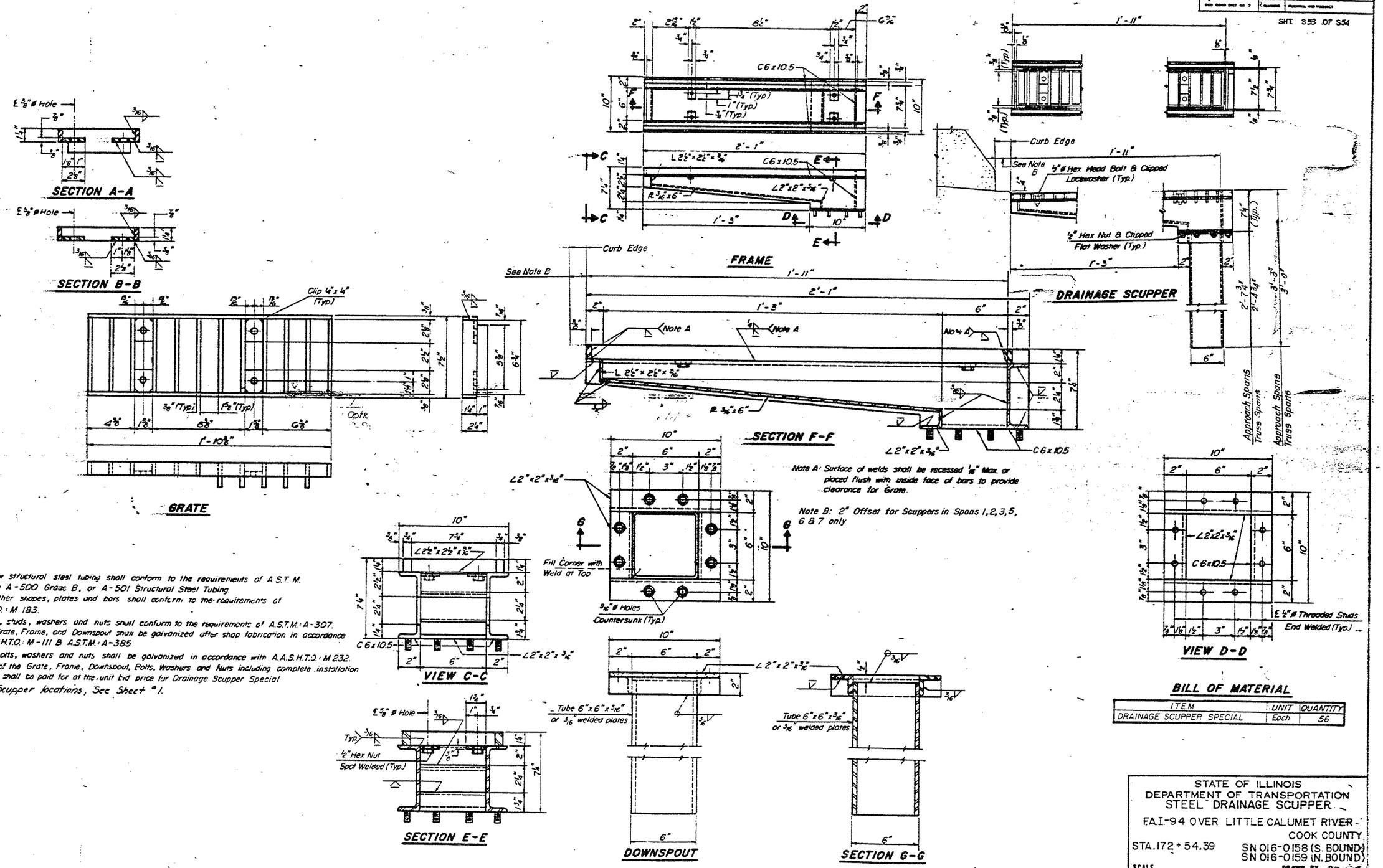


Notes:

Hollow structural steel tubing shall conform to the requirements of A.S.T.M. designation A-500 Grade B, or A-501 Structural Steel Tubing.

All other shapes, plates and bars shall conform to the requirements of A.A.S.H.T.O.: M 183.

Bolts, studs, washers and nuts shall conform to the requirements of A.S.T.M.: A-307.

The Grate, Frame, and Downspout shall be galvanized after shop fabrication in accordance with A.A.S.H.T.O.: M-111 & A.S.T.M.: A-385

All bolts, washers and nuts shall be galvanized in accordance with A.A.S.H.T.O.: M 232.

Cost of the Grate, Frame, Downspout, Bolts, Washers and Nuts including complete installation of Scupper shall be paid for at the unit bid price for Drainage Scupper Special

For Scupper locations, See Sheet #1.

## BILL OF MATERIAL

| ITEM | UNIT | QUANTITY |
|---|---|---|
| DRAINAGE SCUPPER SPECIAL | Each | 56 |

STATE OF ILLINOIS
DEPARTMENT OF TRANSPORTATION
STEEL DRAINAGE SCUPPER

F.A.I.-94 OVER LITTLE CALUMET RIVER
COOK COUNTY

STA. 172 + 54.39
SN 016-0158 (S. BOUND)
SN 016-0159 (N. BOUND)

SCALE
DRAWN BY P.
DATE NOV. 1991
CHECKED BY J.M.

STATE OF ILLINOIS
DEPARTMENT OF TRANSPORTATION

| | | | | |
|---|---|---|---|---|
| I-94 | 4 | COOK | 318 | 227 |

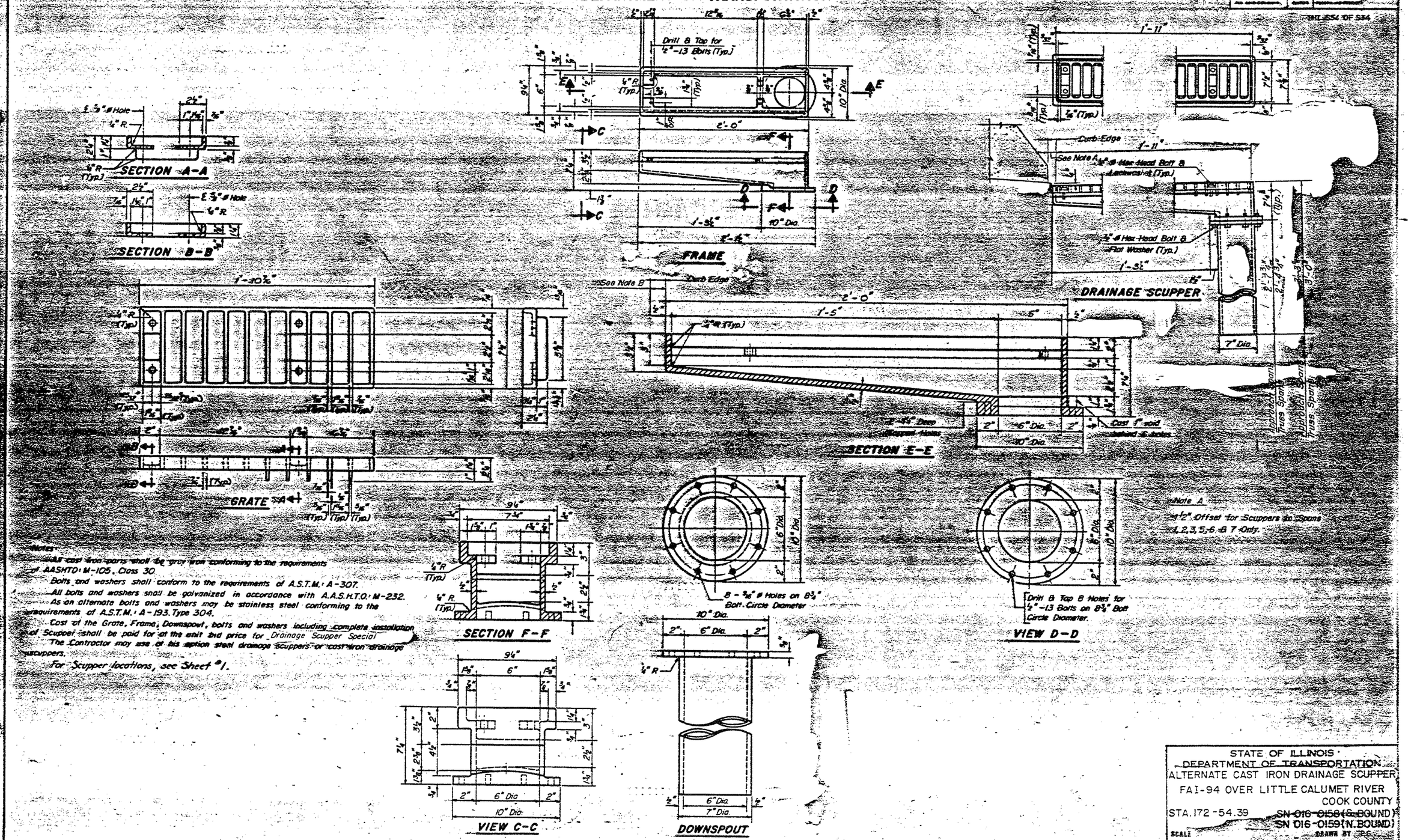


Notes:

All cast iron parts shall be gray iron conforming to the requirements of AASHTO: M-105, Class 30.

Bolts and washers shall conform to the requirements of A.S.T.M.: A-307.

All bolts and washers shall be galvanized in accordance with A.A.S.H.T.O.: M-232.

As an alternate bolts and washers may be stainless steel conforming to the requirements of A.S.T.M.: A-193, Type 304.

Cost of the Grate, Frame, Downspout, bolts and washers including complete installation of Scupper shall be paid for at the unit bid price for Drainage Scupper Special.

The Contractor may use at his option steel drainage scuppers or cast iron drainage scuppers.

For Scupper locations, see Sheet #1.

STATE OF ILLINOIS
DEPARTMENT OF TRANSPORTATION
ALTERNATE CAST IRON DRAINAGE SCUPPER
FAI-94 OVER LITTLE CALUMET RIVER
COOK COUNTY
STA. 172-54.39 ~~SN 016-0158 (S. BOUND)~~ SN 016-0159 (N. BOUND)

SCALE — DRAWN BY P.C.
DATE NOV. 1981 — CHECKED BY J.M.