92926 #36X 7-10-96 F.A.P. RTE. 753 (IL 104) CHRISTIAN CO. SEC.: 142(BR, BR-1, BR-2)&143BR I&R COPY #36

36X 98% 4-17-1999

F.A.P. RTE.	SECTION	COUNTY	TOTAL SHEETS	SHEET NO.
F.A.P. 753	*	CHRISTIAN	75	1
FED. ROAD DIST. NO.		ILLINOIS	FED. AID PROJECT	*

* 142 BR, BR-1, BR-2, 143 BR *ACBHF-753(22)

D-96-514-96

STATE OF ILLINOIS
DEPARTMENT OF TRANSPORTATION
DIVISION OF HIGHWAYS

PLANS FOR PROPOSED FEDERAL AID HIGHWAY

F.A.P. ROUTE 753 (IL 104)
SECTION 142 (BR, BR-1, BR-2) & 143 BR

PROJECT **ACBHF-753(22)**
CHRISTIAN COUNTY
C-96-520-98

INDEX OF SHEETS

TITLE SHEET	1
TYPICAL SECTIONS	2
SUMMARY OF QUANTITIES	3-4
SCHEDULE AND GENERAL NOTES	5-6
PLAN AND PROFILE	7-10
TRAFFIC CONTROL PLANS	11-14
DETAILS	15-17
SLOPE WALL AND RIPRAP DETAILS	18
BRIDGE PLANS	19-57 *
CROSS SECTIONS	58-75

* SHEET 48 HAS BEEN DELETED

STANDARDS

000001-01
420401-01
515001
630001
631026
701001
701006-01
701011
701201
701301
701306
701311
701321-01
701326
702001
704001
780001
781001-01

SECTION 142 BR-1 INCLUDES REHABILITATION OF S.N. 011-0020 CARRYING FAP 753 (IL 104) OVER LAKE SANGCHRIS

SECTION 142 BR-1 INCLUDES REMOVAL OF EXISTING GUARDRAIL LT. & RT. STA. 1+400

SECTION 142 BR INCLUDES REHABILITATION OF S.N. 011-0019 CARRYING FAP 753 (IL 104) OVER LAKE SANGCHRIS

BEGIN SECTION 142 BR STA.0+390

END SECTION 142 BR STA.0+520

BEGIN SECTION 142 BR-1 STA.2+445

END SECTION 142 BR-1 STA.2+575

SECTION 142 BR-2 INCLUDES REHABILITATION OF S.N. 011-0021 CARRYING FAP 753 (IL 104) OVER LAKE SANGCHRIS

SECTION 143 BR INCLUDES REMOVAL OF EXISTING GUARDRAIL RT. STA. 7+185

SECTION 143 BR INCLUDES REHABILITATION OF S.N. 011-0022 CARRYING FAP 753 (IL 104) OVER LAKE SANGCHRIS

END SECTION 143 BR STA.7+987.628

BEGIN SECTION 143 BR STA.7+888.988

END SECTION 142 BR-2 STA.3+705

BEGIN SECTION 142 BR-2 STA.3+583.125

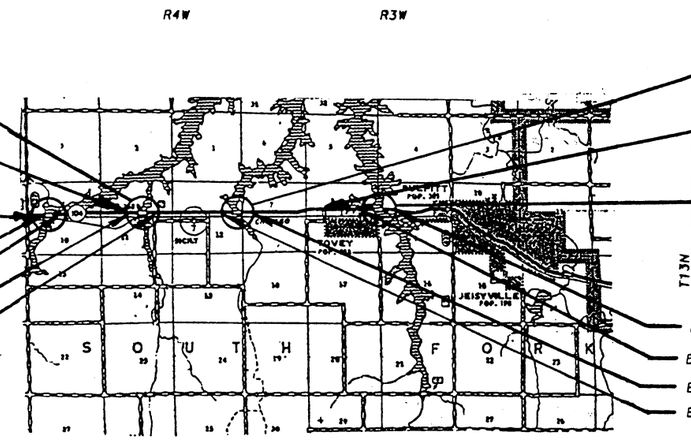

LOCATION MAP
SCALE 1 : 63360

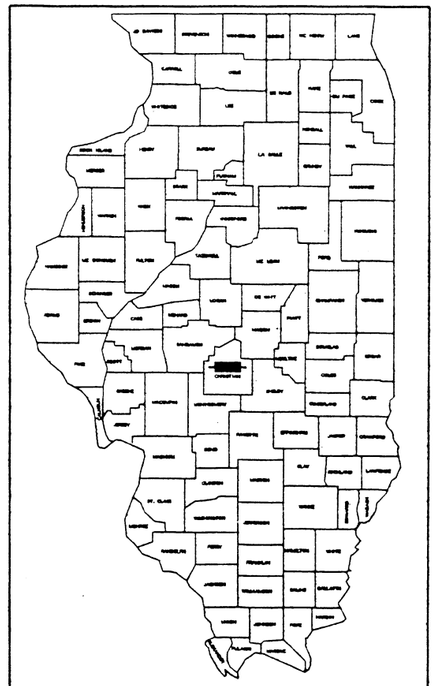

LOCATION OF SECTION INDICATED THUS: -

METRIC RATIOS

1 m 0 2 m 1 : 50
0 5 m 10 m 1 : 100
10 m 0 20 m 1 : 250
5 m 0 20 m 1 : 500
0 50 m 100 m 1 : 1000

FULL SIZE PLANS HAVE BEEN PREPARED USING STANDARD ENGINEERING SCALES. REDUCED SIZED PLANS WILL NOT CONFORM TO STANDARD SCALES. IN MAKING MEASUREMENT ON REDUCED PLANS, THE ABOVE SCALES MAY BE USED.

J.U.L.I.E.
JOINT UTILITY LOCATION INFORMATION FOR EXCAVATION
1-800-892-0123

GROSS LENGTH OF SECTION	7597.628 METERS	7.589 KILOMETERS
SECTION 142 BR	130.000 METERS	0.130 KILOMETERS
SECTION 142 BR-1	130.000 METERS	0.130 KILOMETERS
SECTION 142 BR-2	121.875 METERS	0.122 KILOMETERS
SECTION 143 BR	98.640 METERS	0.099 KILOMETERS
NET LENGTH OF SECTION	480.515 METERS	0.481 KILOMETERS

STATE OF ILLINOIS
DEPARTMENT OF TRANSPORTATION
DIVISION OF HIGHWAYS

SUBMITTED December 17 19 97
James L. Easterly
DISTRICT ENGINEER

19

ENGINEER OF PROJECT DEVELOPMENT AND IMPLEMENTATION
June 19, 19 98
Bill Hinkley
ENGINEER OF DESIGN AND ENVIRONMENT
June 19, 19 98
James R. Slife
DIRECTOR, DIVISION OF HIGHWAYS

CURRENT A.D.T. = 3350 (1994)
PROJECTED A.D.T. = 4150 (2017)

PRINTED BY AUTHORITY OF THE STATE OF ILLINOIS

6-237

CONTRACT NO. 92926

PROJECT ENGINEER: SAL WADON:A (217) 782-4751
SOCAD LEADER: NICK-CLAS A. KETCHUM (217) 524-7340

011-0020

CHRISTIAN COUNTY SECTION 142 (BR, BR-1, BR-2), 143 BR FAP 753

AAIC Incorporated Architects / Engineers

011-0020

STATE OF ILLINOIS
DEPARTMENT OF TRANSPORTATION

ROUTE NO.	SECTION	COUNTY	TOTAL SHEETS	SHEET NO.
F.A.P. 753	142BR-1	CHRISTIAN	75	29
FED. ROAD DIST. NO. 7	ILLINOIS	FED. AID PROJECT-		

SHEET NO. 1
10 SHEETS

EXISTING STRUCTURE-NO. 011-0020

Built in 1965 FAP Route 753 over Sangchris Lake. Simple Precast Conc. Girder Units. 3 Spans lengths of 10.884m, 11.074m, 10.884m, total width of superstructure is 14.12m out to out. Existing Superstructure only to be removed and replaced with 432mm PPC deck beams. Existing abutments and piers to remain and be modified. Stage construction to be utilized.

BENCHMARK

Spike in Power Pole Sta. 2+625.60
20.269m Left . Elev. 182.06

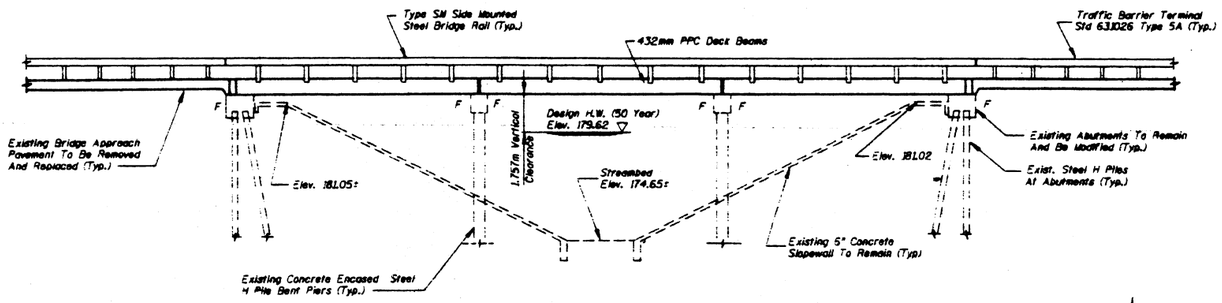

ELEVATION

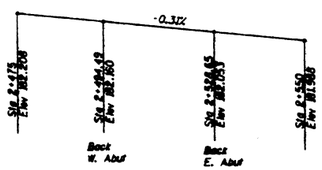

PROFILE GRADE
(Along ℄ F.A.P.753)

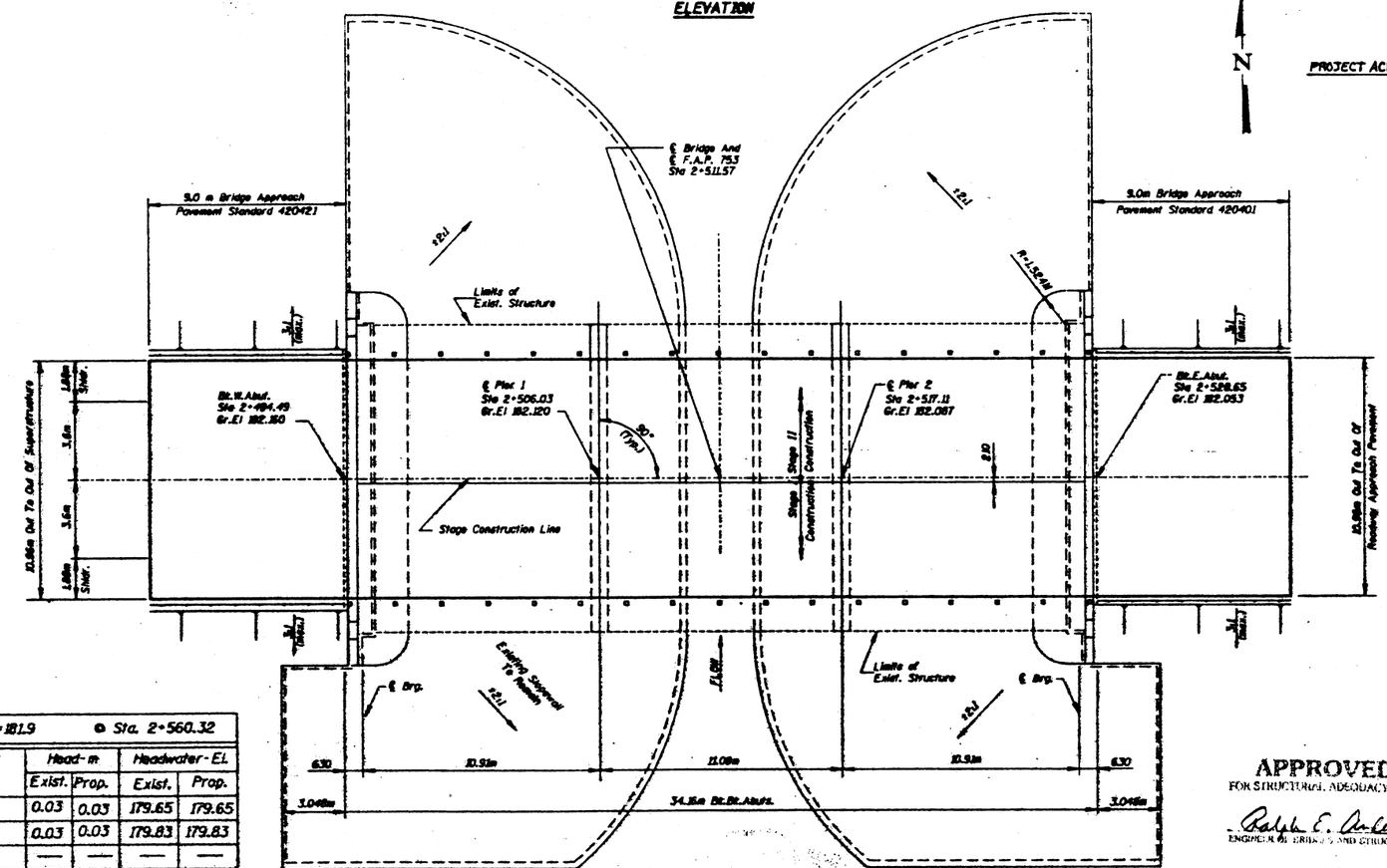

PLAN

DESIGN SPECIFICATIONS

1986 A.A.S.H.T.O.

SEISMIC DATA

Seismic Preformance Category (SPC)=A
Bedrock Acceleration Coefficient (A)= .066
Site Coefficient (S)= 1.5

LOADING MS 18

Allow 1.2kN/m² for future wearing surface

DESIGN STRESSES

FIELD UNITS
f'c = 24 MPa
fy = 400 MPa

PRECAST PRESTRESSED UNITS
f'c = 35 MPa
f'ci = 28 MPa
f's = 1,860 MPa (12.7mm ϕ stands)
f'si = 1,302 MPa (12.7mm ϕ stands)
Low relaxation

PROJECT ACBHF-753 (22)

STATION 2+511.57
REBUILT 19__ BY
STATE OF ILLINOIS
FAP 753 SECTION 142BR-1
STATE OF ILLINOIS
LOADING MS18
STR. NO. 011-0020

NAME PLATE
See Sht. 5.15001

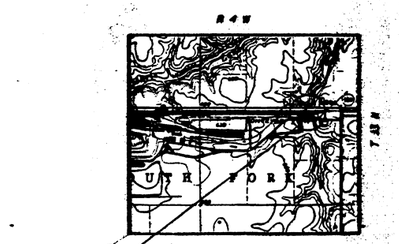

LOCATION SKETCH

WATERWAY INFORMATION

Drainage Area = 27.2 km² Low Grade EL=181.9 @ Sta. 2+560.32

Flood	Freq. Yr.	Q m³/s	Opening m² Exist.	Opening m² Prop.	Nat. H.W.E.	Head-m Exist.	Head-m Prop.	Headwater-EL Exist.	Headwater-EL Prop.
Design	50	43.9	58.8	58.8	179.62	0.03	0.03	179.65	179.65
Base	100	47.3	63.3	63.3	179.80	0.03	0.03	179.83	179.83
Overtopping	—	—	—	—	—	—	—	—	—
Max. Calc.	500	62	73.4	73.4	180.20	0.03	0.03	180.23	180.23

DESIGNED	RAB
CHECKED	WCU
DRAWN	SY
CHECKED	RAB

Existing name plate shall be cleaned and placed next to new name plate. Cost included with name plates.

STATE OF ILLINOIS REGISTERED STRUCTURAL ENGINEER ROBERT A. BRUCKNER 081-004669

ILLINOIS LICENSED STRUCTURAL ENGINEER NO. 081-004669
EXPIRES: 11-30-98

APPROVED
FOR STRUCTURAL ADEQUACY ONLY
Ralph E. Anderson
ENGINEER OF BRIDGES AND STRUCTURES

AAIC
AAIC Incorporated
Architects / Engineers

GENERAL PLAN & ELEVATION
ILLINOIS ROUTE 104 OVER
LAKE SANGCHRIS
F.A.P. 753 SECTION 142BR-1
STA. 2+511.57
CHRISTIAN COUNTY, ILLINOIS
STRUCTURE NO. 011-0020

I:\cadd\aai\96043\43020s01.dgn

STATE OF ILLINOIS
DEPARTMENT OF TRANSPORTATION

ROUTE NO.	SECTION	COUNTY	TOTAL SHEETS	SHEET NO.
F.A.P. 753	142BR-1	CHRISTIAN	75	30
FED. ROAD DIST. NO. 7	ILLINOIS	FED. AID PROJECT-		

SHEET NO. 2
10 SHEETS

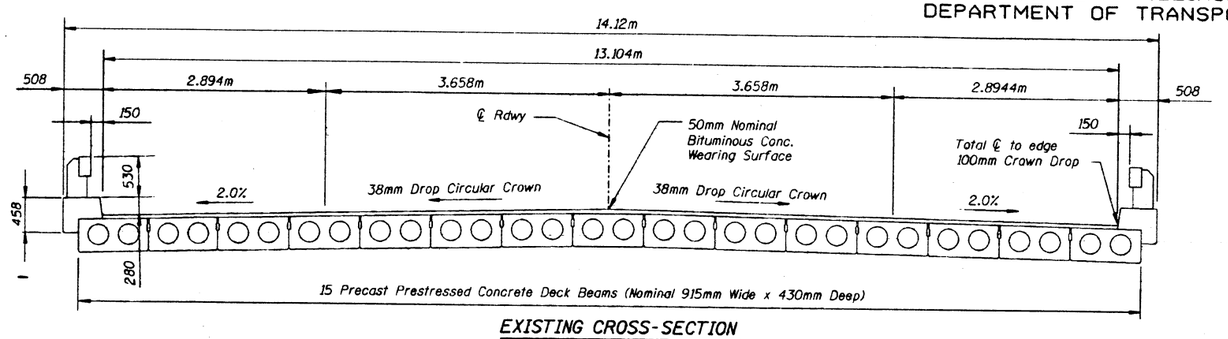

EXISTING CROSS-SECTION
(Looking East)

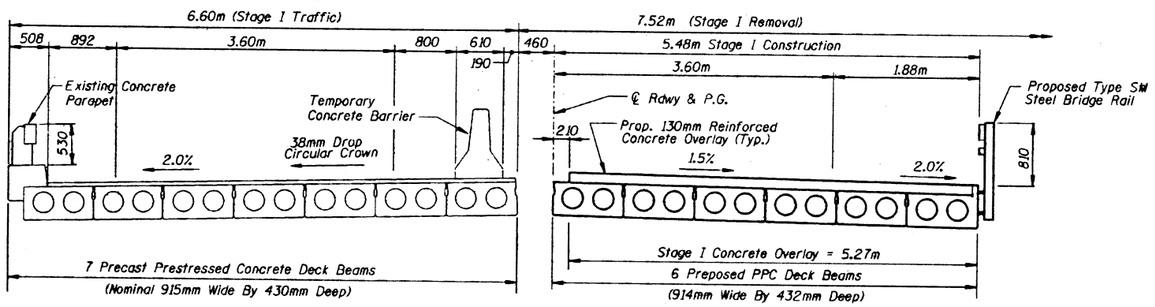

STAGE I CONSTRUCTION
(Looking East)

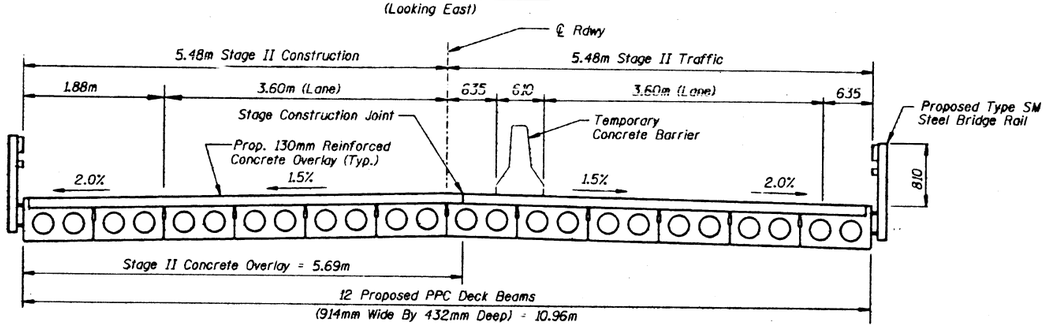

STAGE II CONSTRUCTION
(Looking East)

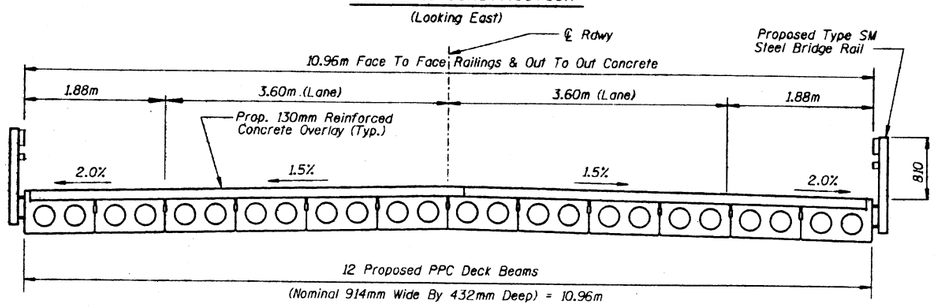

FINAL CROSS SECTION
(Looking East)

GENERAL NOTES

1. Plan dimension and details relative to existing structure have been taken from existing plans and are subject to nominal construction variations. It shall be the Contractor's responsibility to verify such dimensions and details in the field and make necessary approved adjustments prior to construction or ordering of materials. Such variations shall not be cause for additional compensation for a change in the scope of the work, however, the Contractor will be paid for the quantity actually furnished at the unit price bid for the work.
2. A Corrosion Inhibitor, as covered in the Special Provisions, shall be used in the concrete for precast prestressed concrete deck beams.
3. All dimensions are in millimeters (mm) except as noted.
4. Reinforcement bars shall conform to the requirements of AASHTO M-31M, M-42M OR M-53M Grade 400.
5. Existing dowel rods shall be burned off flush with bearing seat. Cost included with removal of existing superstructure.
6. For Bonded Construction Joints, see Special Provisions.

TOTAL BILL OF MATERIAL

ITEM NAME	UNIT	SUPER	SUB	TOTAL
Removal of Existing Superstructures	Each	1		1
Concrete Removal	m^3		4.8	4.8
Concrete Superstructure	m^3		4.8	4.8
Bridge Deck Grooving	m^2	344.3		344.3
Concrete Wearing Surface	m^2	348.0		348.0
Precast Prestressed Concrete Deck Beams (432mm)	m^2	364.0		364.0
Reinforcement Bars (Epoxy Coated)	KG	4290		4290
Steel Bridge Rail, Type SM	Meter	68.32		68.32
Name plates	Each	1		1

AAIC
AAIC Incorporated
Architects / Engineers

STAGE CONSTRUCTION DETAILS, GENERAL NOTES, TOTAL BILL OF MATERIAL
ILLINOIS ROUTE 104 OVER
LAKE SANGCHRIS
F.A.P. 753 SECTION 142BR-1
STA. 2+511.57
CHRISTIAN COUNTY
STRUCTURE NO. 011-0020

1:\cadd\aai\96043\43020s02.dgn

STATE OF ILLINOIS
DEPARTMENT OF TRANSPORTATION

ROUTE NO.	SECTION	COUNTY	TOTAL SHEETS	SHEET NO.
S.B.I. F.A.P. 753	142BR-1	CHRISTIAN	75	31
FED. ROAD DIST. NO. 7		ILLINOIS	FED. AID PROJECT-	

SHEET NO. 3
10 SHEETS

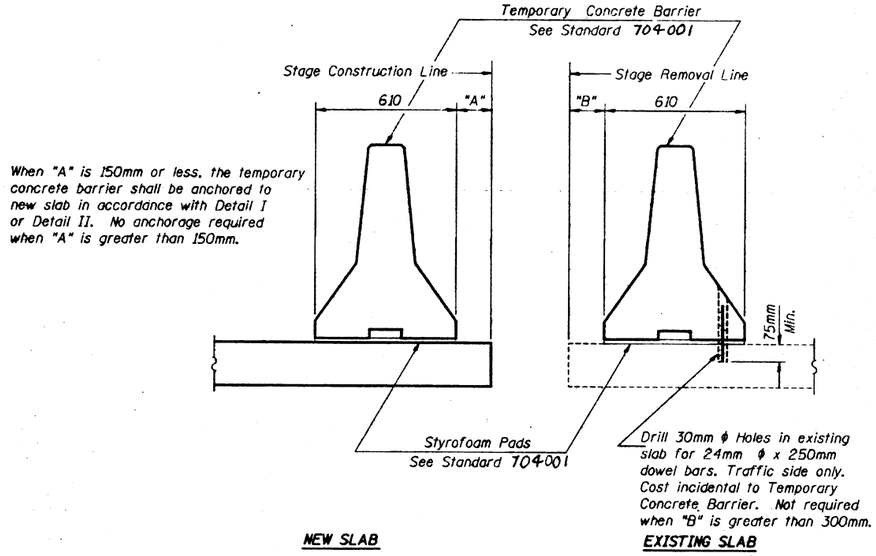

SECTIONS THRU SLAB

NOTES

Detail I - With Bar Splicer or Couplers:
Connect one (1) 25x180x250 steel ℙ to the top layer of couplers with 2-16mm ϕ bolts screwed to coupler at approximate ℄ of each 3m barrier panel.

Detail II - With Extended Reinforcement Bars:
Connect one (1) 25x180x250 steel ℙ to the concrete slab with 2-16mm ϕ Expansion Anchors or cast in place inserts spaced between the top layer of reinforcement at approximate ℄ of each 3m barrier panel.

Cost of anchorage is incidental to Temporary Concrete Barrier.
For pay item "Temporary Concrete Barrier", see Roadway plans.

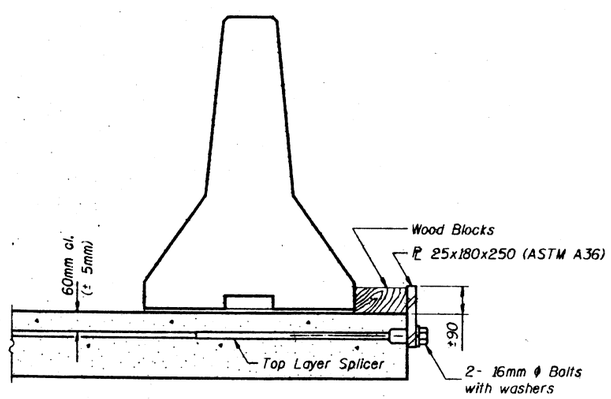

DETAIL I

The 25x180x250 Plate shall not be removed until Stage II Construction forms and reinforcement bars are in place.

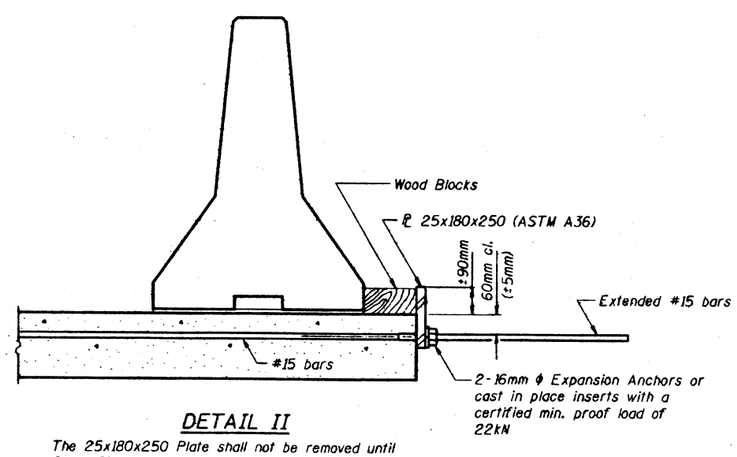

DETAIL II

The 25x180x250 Plate shall not be removed until Stage II Construction forms and all reinforcement bars are in place and the concrete is ready to be placed.

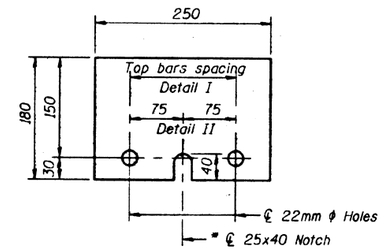

ℙ 25x180x250

* Required only with Detail II

TEMPORARY CONCRETE BARRIER
ILLINOIS ROUTE 104 OVER
SANGCHRIS LAKE
F.A.P. 753 SECTION 142BR-1
STA. 2+511.57
CHRISTIAN COUNTY, ILLINOIS
STRUCTURE NO. 011-0020

R-27M

I:\cadd\aa:\96043\43020s03.dgn

STATE OF ILLINOIS
DEPARTMENT OF TRANSPORTATION

ROUTE NO.	SECTION	COUNTY	TOTAL SHEETS	SHEET NO.
F.A.P. 753	142BR-1	CHRISTIAN	75	32

SHEET NO. 4
10 SHEETS

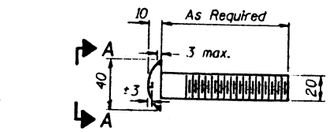

DETAIL OF 20 mm ϕ ROUND HEAD BOLT

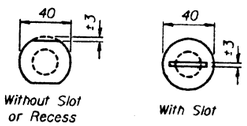

VIEW A-A

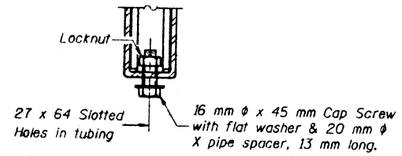

RAIL SPLICE CONNECTION AT EXPANSION JT.

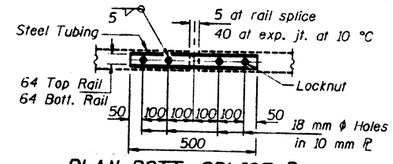

PLAN-BOTT. SPLICE PL TYPICAL

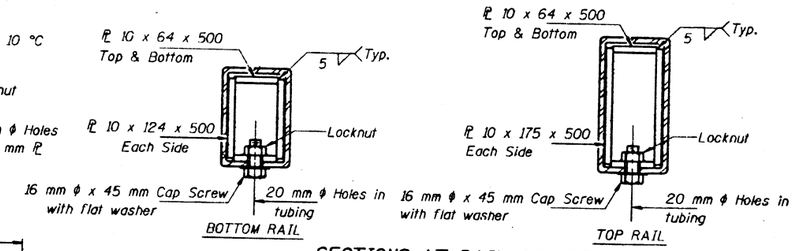

SECTIONS AT RAIL SPLICE

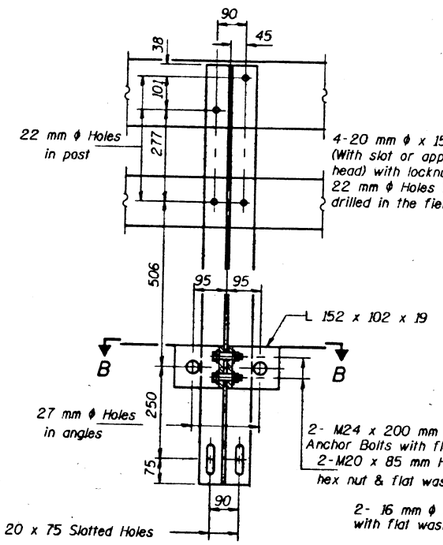

SECTION A-A

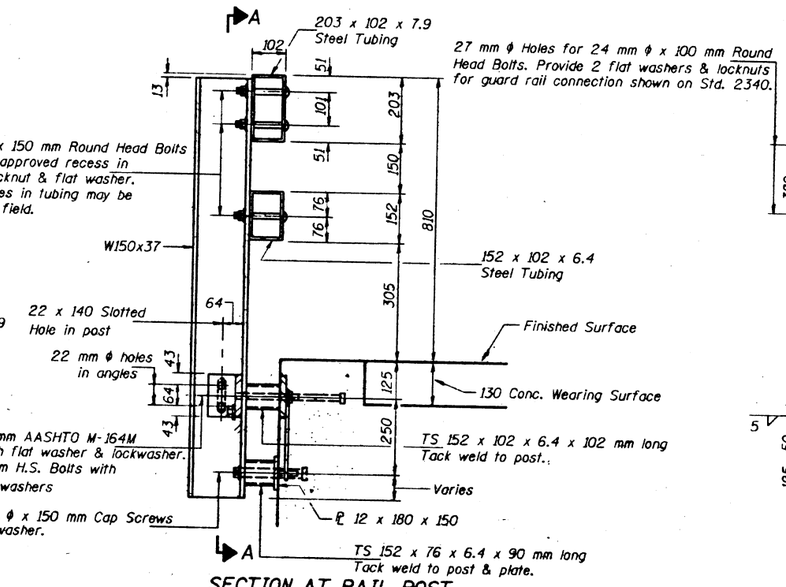

SECTION AT RAIL POST

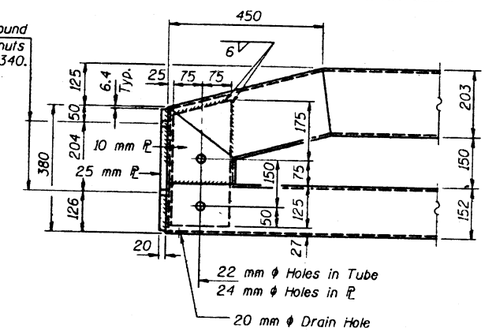

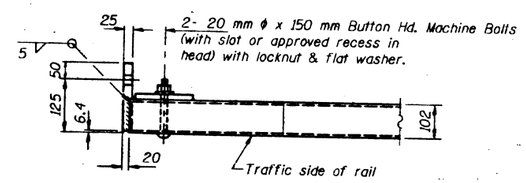

END OF RAIL DETAILS

NOTES

Hollow structural steel tubing shall conform to the requirements of ASTM desingnation A-500 Grade B Structural Steel Tubing and shall meet the longitudinal CVN requirements of 20 N·m at -18 °C.

All other steel shapes and plates shall conform to the requirements of AASHTO M-270 Grade 250 except posts and angles shall conform to AASHTO M-270, Grade 345.

Bolts, cap screws, and nuts shall conform to the requirements of ASTM designation A-307 except for high strength bolts, nuts and washers noted which shall conform to AASHTO M-164M.

All bolts, nuts, cap screws, washers and lock washers shall be galvanized in accordance with AASHTO M-232.

All posts, railing, rail splices, anchor devices and angles shall be galvanized after shop fabrication in accordance with AASHTO M-111 and ASTM A-385. Galvanized rail shall not be painted.

Railing shall be in accordance with Section 509 of the Standard Specifications, except as noted, and will be paid for at the contract unit price per meter for STEEL BRIDGE RAIL, TYPE SM.

All field drilled holes shall be coated with an approved zinc rich paint before erection.

For multi-span PPC Deck bridges, sufficient 6 x 150 x 360 galvanized steel shims shall be provided to align rail between adjacent spans. Cost incidental to STEEL BRIDGE RAIL, TYPE SM.

Bolts located at expansion joint shall be provided with locknuts and shall be tightened only to a point that will allow railing movement.

The M20 high strength bolts used to connect the 152 x 102 x 19 angles to the post shall be tightened in accordance with Article 505.04(fX3) of the Standard Specifications. The M24 high strength bolts connecting the angles to the concrete shall be tightened to a snug fit and given an additional ⅓ turn. The 16 mm ϕ cap screws in bottom of posts shall be tightened to a snug fit only.

All dimensions are in millimeters (mm) except as noted.

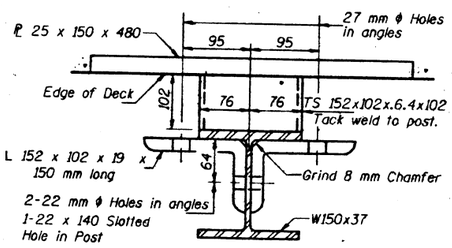

SECTION B-B

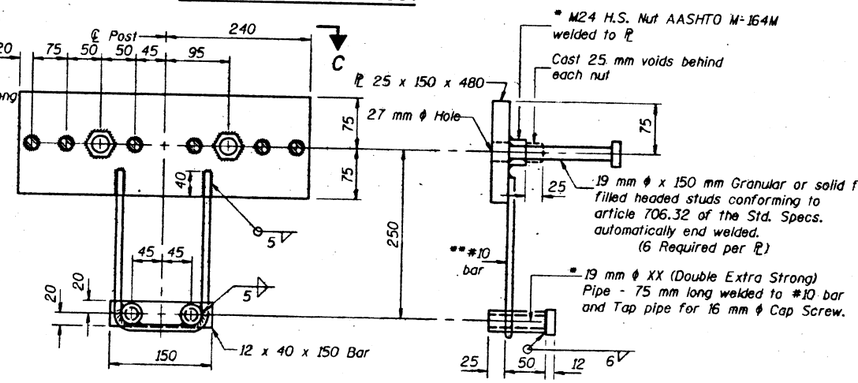

ANCHOR DEVICE

* Threaded areas shall be plugged or blocked off during casting of beam. Galvanized after fabrication.

** Whenever the lower insert assemblies interfere with strand locations, the #10 bars shall be cut and adjusted in order to allow raising or lowering of the lower inserts. Maximum adjustment not to exceed 12 mm.

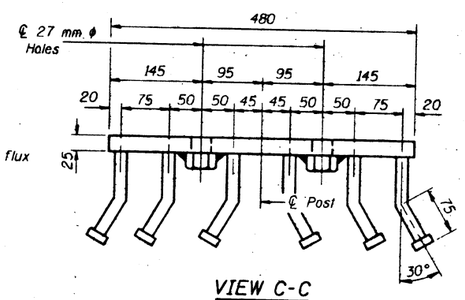

VIEW C-C

BILL OF MATERIAL

Item	Unit	Quantity
Steel Bridge Rail, Type SM	m	68.32

TYPE SM
STEEL BRIDGE RAIL SIDE MOUNTED

TYPE SM STEEL RAILING
ILLINOIS ROUTE 104 OVER
LAKE SANGCHRIS
F.A.P. 753 SECTION 142BR-1
STA. 2+511.57
CHRISTIAN COUNTY, ILLINOIS
STRUCTURE NO. 011-0020

R-34M

1:\cadd\aai\96043\43020s04.dgn

STATE OF ILLINOIS
DEPARTMENT OF TRANSPORTATION

ROUTE NO.	SECTION	COUNTY	TOTAL SHEETS	SHEET NO.
F.A.P. 753	142BR-1	CHRISTIAN	75	33
FED. ROAD DIST. NO. 7		ILLINOIS	FED. AID PROJECT-	

SHEET NO. 5
10 SHEETS

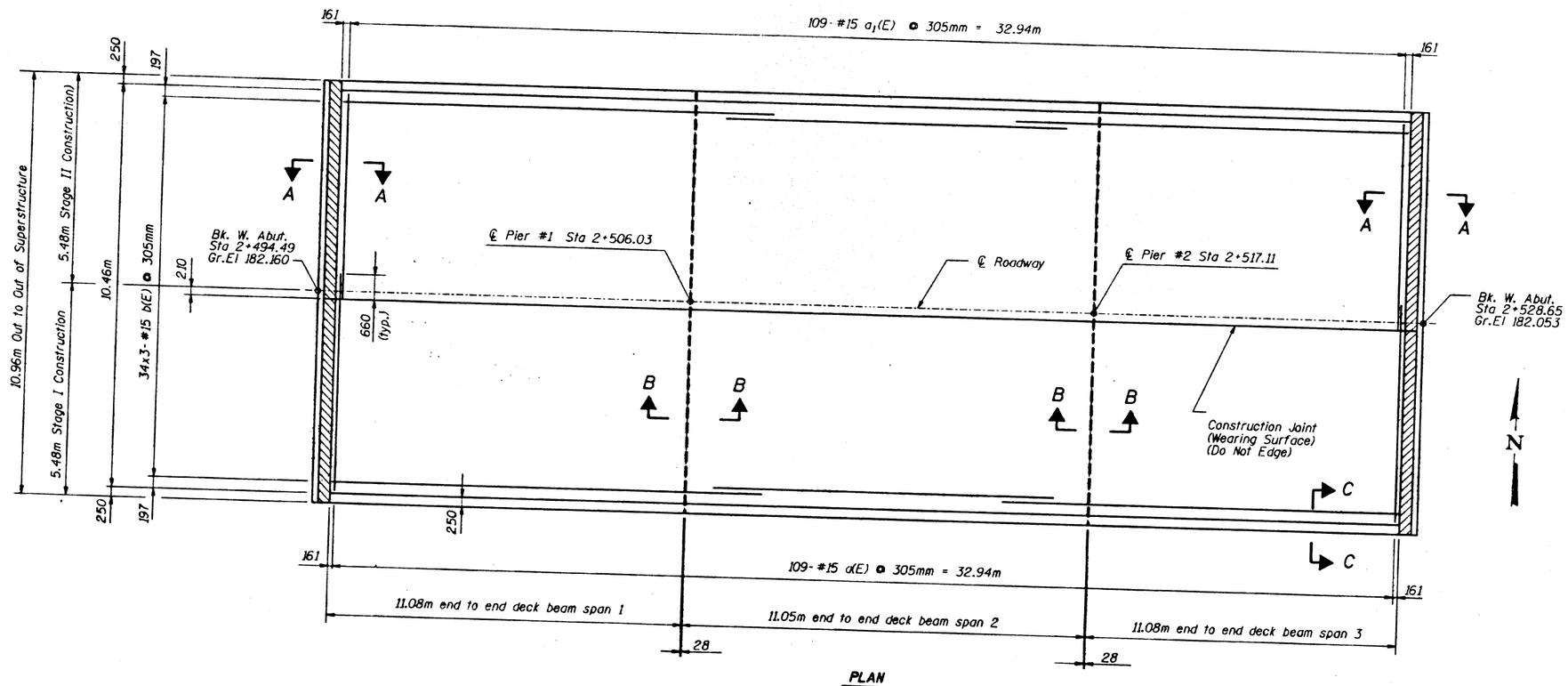

PLAN

SUPERSTRUCTURE BILL OF MATERIAL

Bar	No.	Size	Length	Shape
a(E)	109	#15	5.65	
a_1(E)	109	#15	5.39	
b(E)	102	#15	11.51	
Concrete Wearing Surface			m^2	348
Reinforcement Bars (Epoxy Coated)			Kg	3730

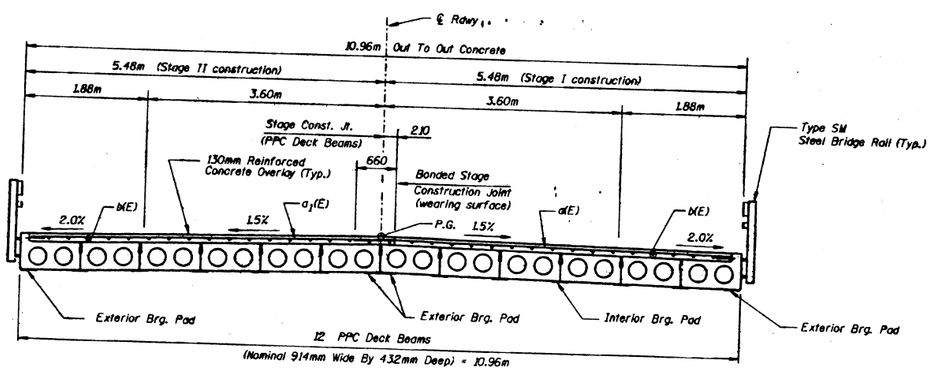

CROSS SECTION
(Looking East)

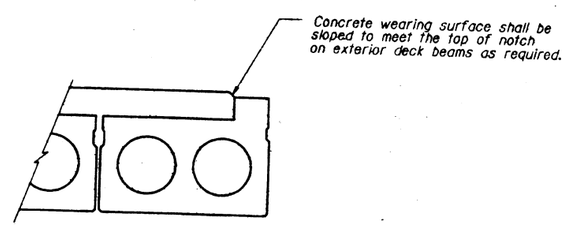

SECTION C-C

* a_1(E) bars lapped with a(E) bars shall be tied with double the number of ties normally used.

NOTES:

For remainder of superstructure details, see sheet 7 of 12
For sections A-A and B-B see sheet X of 12
For post spacing of Type SM Steel Bridge Rail, see sheet X of 12
For details of Steel Bridge Rail, see sheet 8 of 12
Reinforcement bars designated (E) shall be epoxy coated.
Minimum lap splice for #15 bars = 660mm.

DESIGNED	R.A.B.
CHECKED	W.C.U.
DRAWN	S.Y.
CHECKED	R.A.B.

SUPERSTRUCTURE
ILLINOIS ROUTE 104 OVER
LAKE SANGCHRIS
F.A.P. 753 SECTION 142BR-1
STA. 2+511.57
CHRISTIAN COUNTY, ILLINOIS
STRUCTURE NO. 011-0020

1:\cadd\aai\96043\43020s05.dgn

STATE OF ILLINOIS
DEPARTMENT OF TRANSPORTATION

ROUTE NO.	SECTION	COUNTY	TOTAL SHEETS	SHEET NO.
F.A.P. 753	142BR-1	CHRISTIAN	75	34

SHEET NO. 6
10 SHEETS

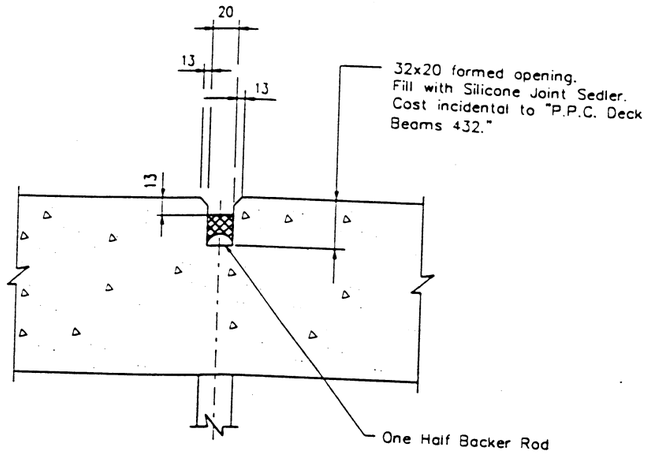

DETAIL "A"

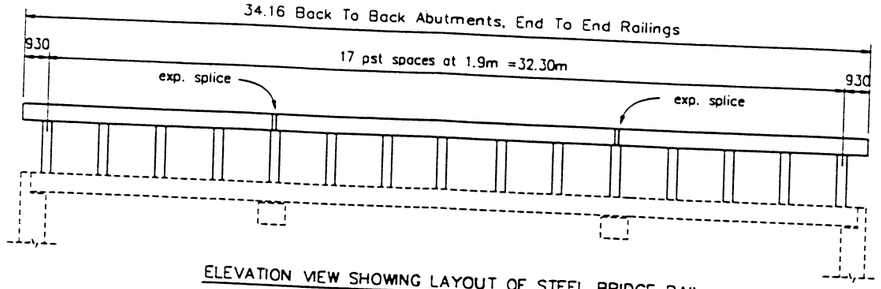

ELEVATION VIEW SHOWING LAYOUT OF STEEL BRIDGE RAIL

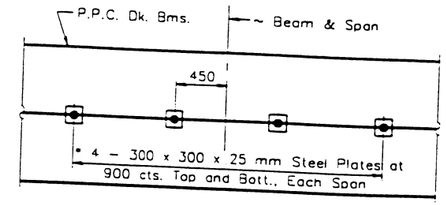

PLAN

* Space plates to miss Temporary Bridge Rail Posts.

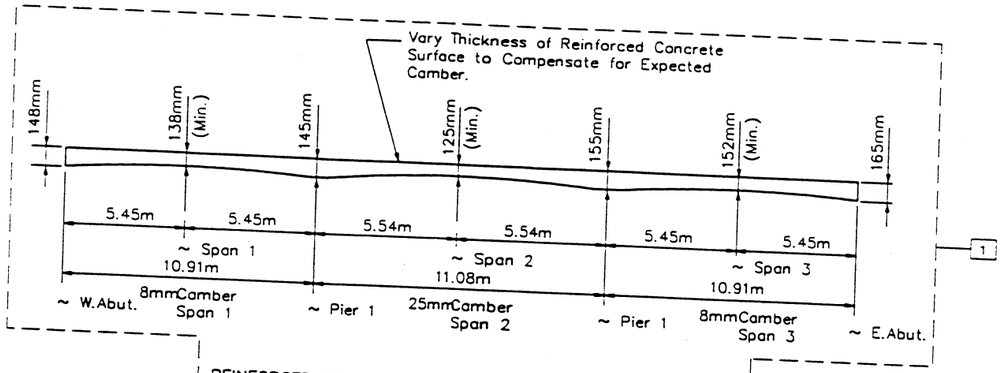

REINFORCED CONCRETE WEARING SURFACE POURING DIAGRAM

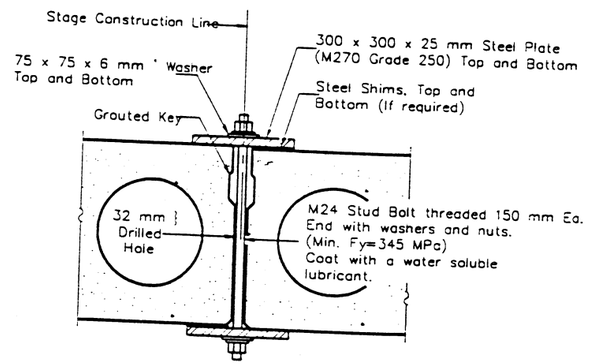

SECTION

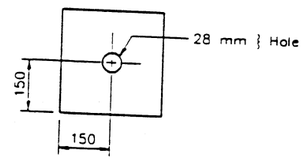

CLAMPING PLATE

SHEAR KEY CLAMPING DETAILS AT STAGE CONST. JT.

Cost included with Precast Prestressed Concrete Deck Beams.
See Stage Construction Detail for traffic lane.

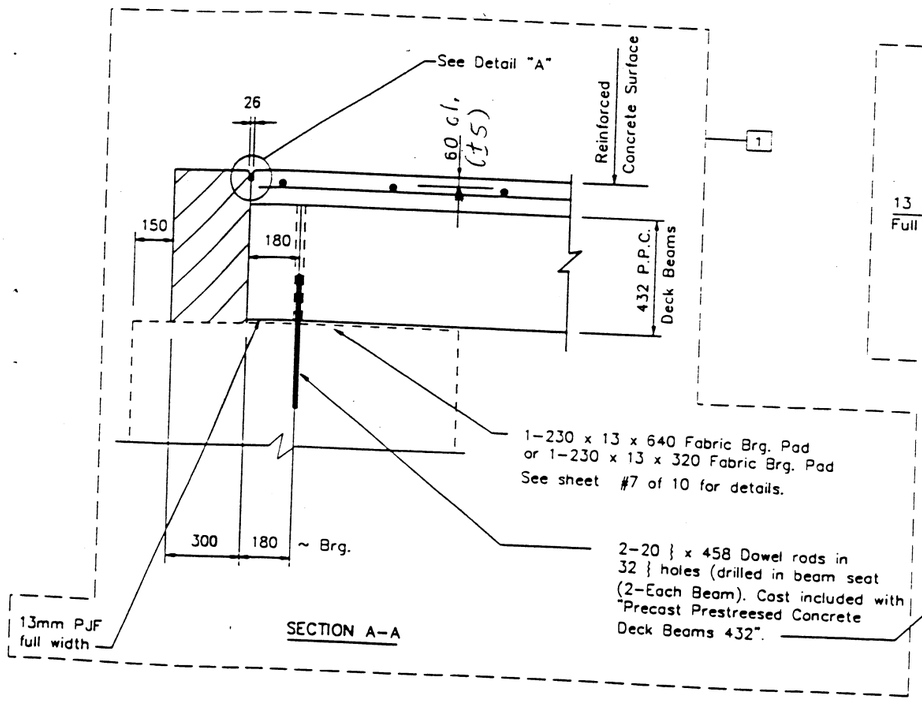

SECTION A-A

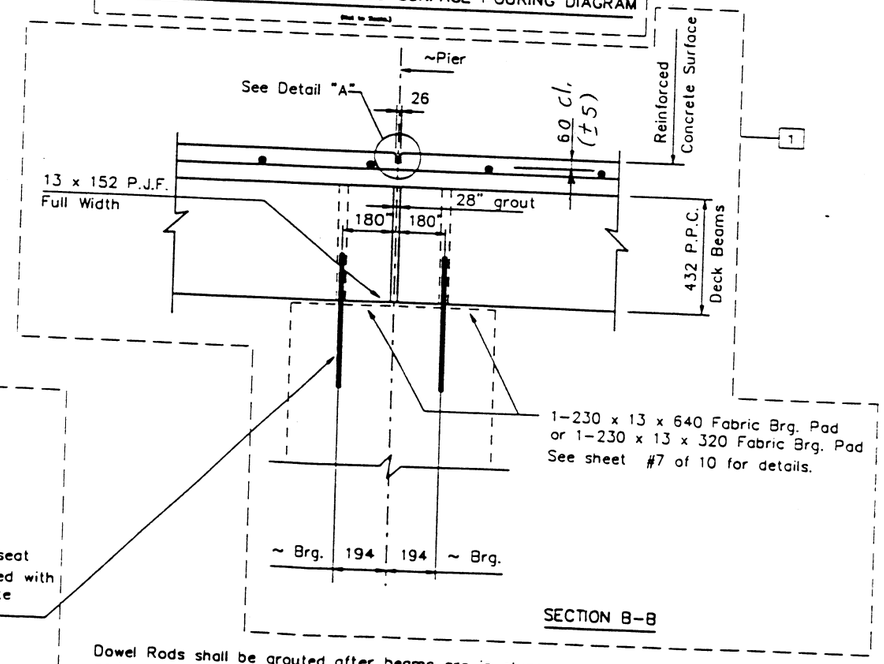

SECTION B-B

Dowel Rods shall be grouted after beams are in place and allowed to cure (minimum 24 hours) prior to grouting the shear keys.

SUPERSTRUCTURE DETAILS
ILLINOIS ROUTE 104 OVER
LAKE SANGCHRIS
F.A.P. 753 SECTION 142BR-1
STA. 2+511.57
CHRISTIAN COUNTY, ILLINOIS
STRUCTURE NO. 011-0020

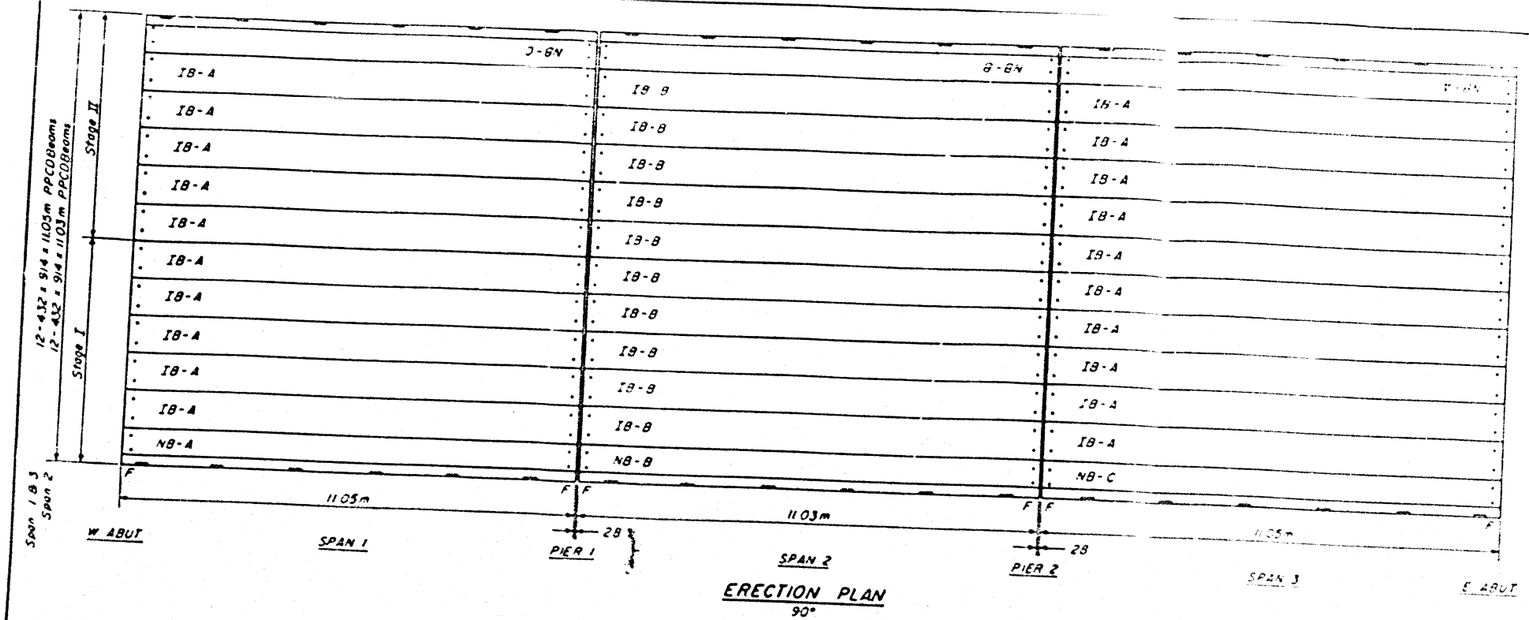

ERECTION PLAN
90°

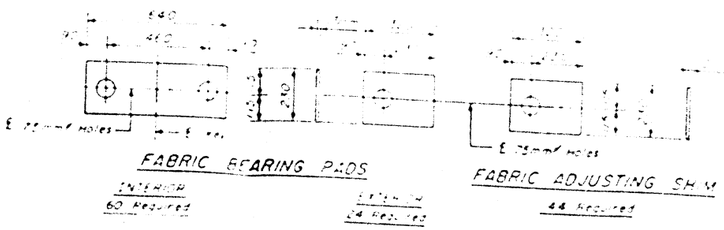

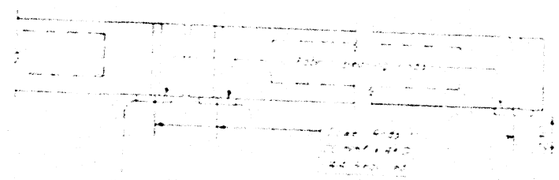

SEC AT PIERS

SEC AT ABUTS

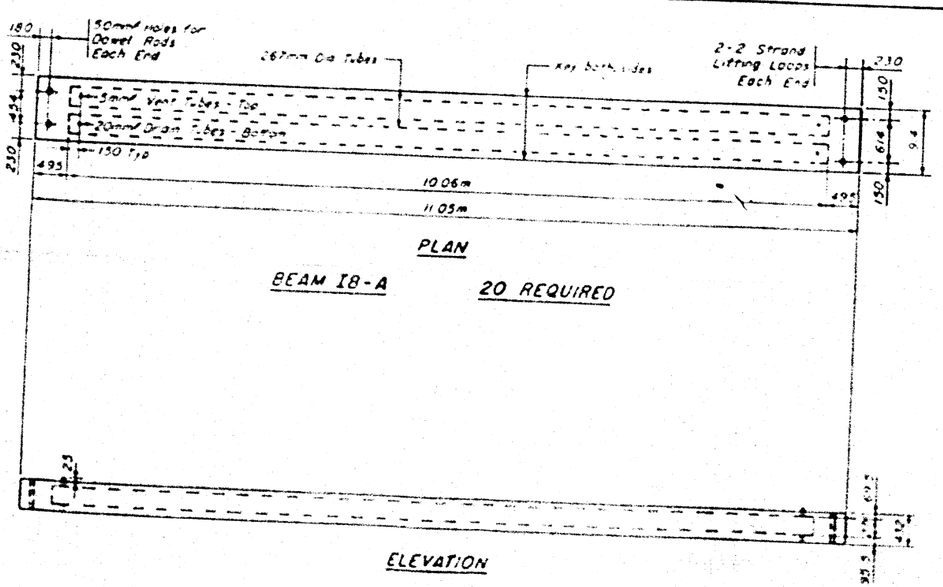

PLAN

BEAM IB-A 20 REQUIRED

ELEVATION

FINAL

SPANS 1 & 3

SHEET	SHEET NO.
2 OF 8	PC-158-98

BEAM IB-A 432 x 914

Date Poured	
1	
2	
3	
4	
5	
6	
7	
8	
9	
10	
11	
12	
13	
14	
15	
16	
17	
18	
19	
20	

PRESTRESS NOTES

[illegible]

Special [illegible] shall be used in the concrete for [illegible] prestressed concrete [illegible] beams.

[illegible] shall conform to AASHTO M203 Grade 485.

[illegible] wire fabric shall conform to AASHTO M55 and [illegible]

Reinforcement to AASHTO M31M, M42M or M53M Grade 400.

All [illegible] shall be [illegible] high strength prestressed [illegible].

[illegible] Strands shall be 7 wire low relaxed [illegible] AASHTO M203 Grade 1860.

[illegible] surfaces shall be cleaned to remove form oil or other bond breaking material prior to placement of the beams. Cleaning shall be done by sandblasting the [illegible] between top of the beam and the bottom edge of the [illegible].

Each end of beam shall be given two [illegible] coats of [illegible].

[illegible]

The top of beams shall be roughened by brooming [illegible] 504.06(b)(5) of the IDT Specs.

SPECIAL NOTE

All Steel and Bearing Materials will be furnished by Contractor.

FINAL

FIELD BILL OF MATERIAL

Stage 2	Item	Stage 2
1	[illegible]	
1	[illegible]	
10	[illegible]	
5	[illegible]	
72	[illegible]	72
54	[illegible]	54
72	[illegible]	72
2	[illegible]	2
30	[illegible]	30

APPROVED

PRINT RECORD		
DATE		
[illegible]		
[illegible]		
[illegible]		
[illegible]		
[illegible]		
[illegible]		
[illegible]		

SEAL on 10 July 98

92926 | C-96-520-98

F.A. PROJ ACBHF-753(22)
STR. No. 011-0020
F.A.P. RT 753 (IL 104)
OVER LAKE SANGCHRIS
SEC. 142BR-1
CHRISTIAN COUNTY
STA 2+511.57

ICCI

PC-158-98

SHEET 1 OF 8

D C B A 0 A B C D

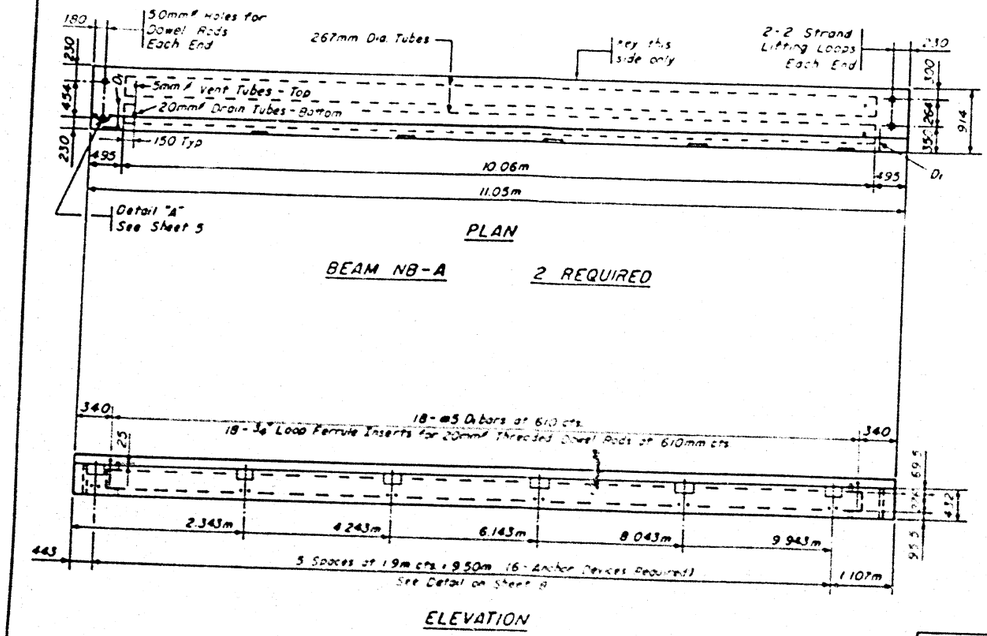

FINAL

SHEET	SHOP NO.
3 of 8	PC-158-98
432 x 914	BEAM NB-A

SPANS 1 & 3

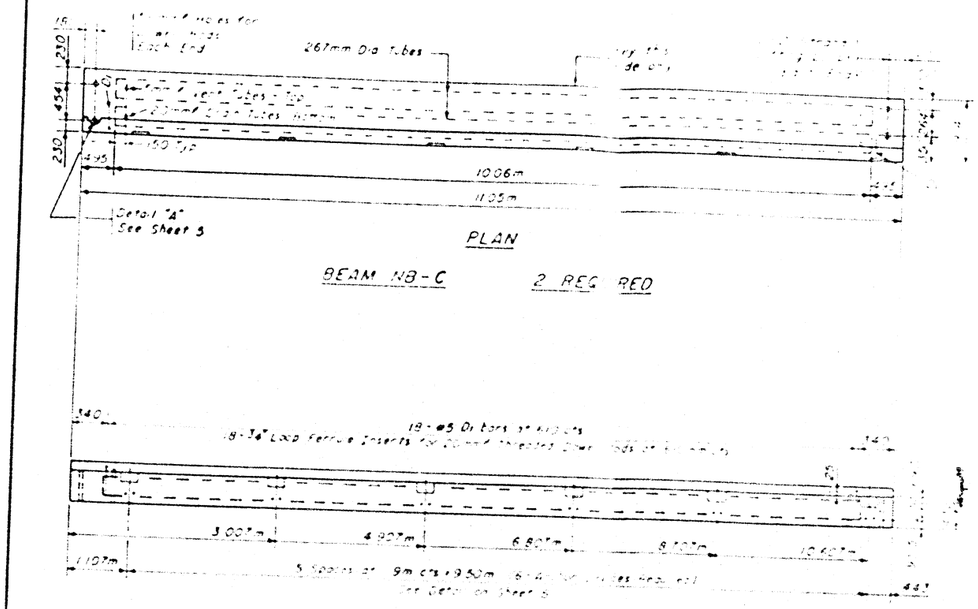

FINAL

SHEET	SHOP NO.
4 of 8	PC-158-98
432 x 914	BEAM NB-C

Omit Keyways on exterior side of Beams NB-A & C.

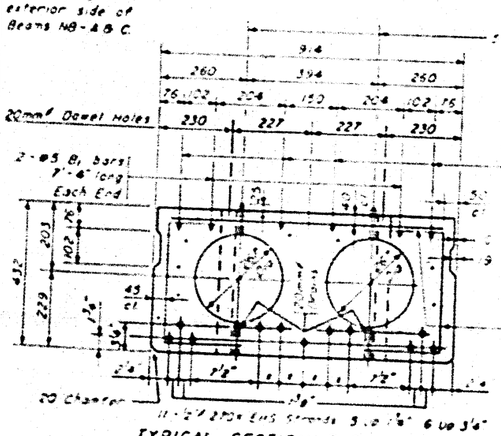

TYPICAL SECTION THRU BEAM

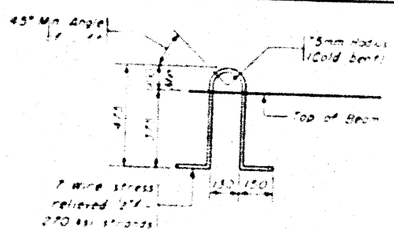

LIFTING LOOP

2-½" ø Strands
44 Required
Job Total

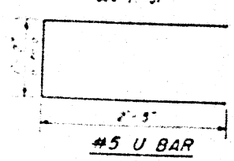

#5 U BAR

412 Required
Job Total

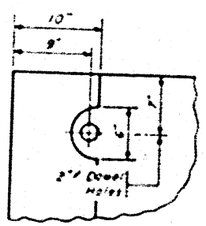

DETAIL "A"

SIDE FABRIC

8 x 3-#2.5 x #5.5
32" x 33'-0¼"
48 Required

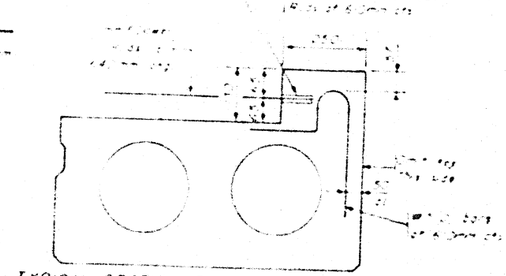

TYPICAL SECTION THRU NOTCH BEAM

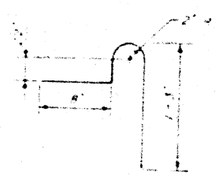

#5 Di BAR

108 Required
Job Total

APPROVED

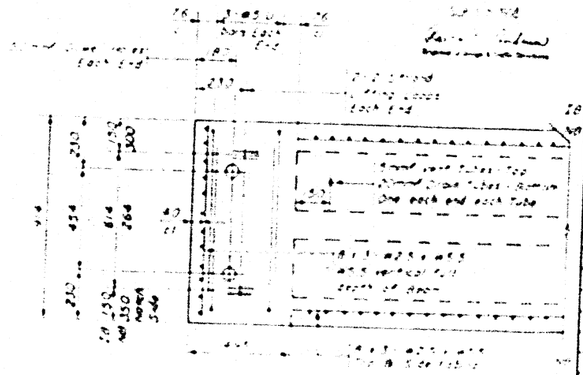

PLAN - TYPICAL END OF BEAM

FABR. NOTES

All Dimensions are in millimeters (mm) unless otherwise noted. See Bill of Material. Strand Length, Reinforcement bars and wire Fabric in English.

Strands in each cut must be cut in all beams of that form bed before progressing to next strand release sequence.

Seal Drains before concrete placement and open before shipment. Vents to be open during curing period, but removed and sealed before shipment (flush with top of Beam).

SHOP BILL OF MATERIAL

Mark	Size	Length	Shape	No.	Total Length	Weight	Remarks
[illegible]	#5	9'-2"		[illegible]	[illegible]	[illegible]	
[illegible]	[illegible]	7'-4"		4	96		
[illegible]	[illegible]	2'-8"		8	72		
[illegible]	5	6'-0"		2	208		
Reinforcement Bars				Lbs	166	6,384	[illegible]
					3.6	1264	7,648 Lbs
[illegible]							
Top	3/4"	33'-0¼"		[illegible]	[illegible]	[illegible]	[illegible]
[illegible]	[illegible]	[illegible]		[illegible]	[illegible]	[illegible]	[illegible]
Side	3/4"	33'-0¼"		[illegible]	[illegible]	[illegible]	[illegible]
[illegible]	[illegible]	[illegible]		Lbs	[illegible]	[illegible]	[illegible]
Concrete 5,000 psi, See Table				CY	4.7	84.0	[illegible]
					4.6	18.4	[illegible]
Lifting Loops 2-½" ø Strands				4		[illegible]	
Vent Tubes 4 x 2-#5 B				4		[illegible]	
Drain Tubes 4 x 2-#5 B				4		[illegible]	
Tubes 2-2 Ø 5				4		[illegible]	
[illegible]							
[illegible]		33'-0¼"			48	[illegible]	
[illegible]				4	24	[illegible]	
[illegible]				4	12	[illegible]	

SHEET	SHOP NO.
5 of 8	PC-158-98
432 x 914	SHOP DETAILS

SPANS 1 & 3

FINAL

Date	Revision
1	
2	

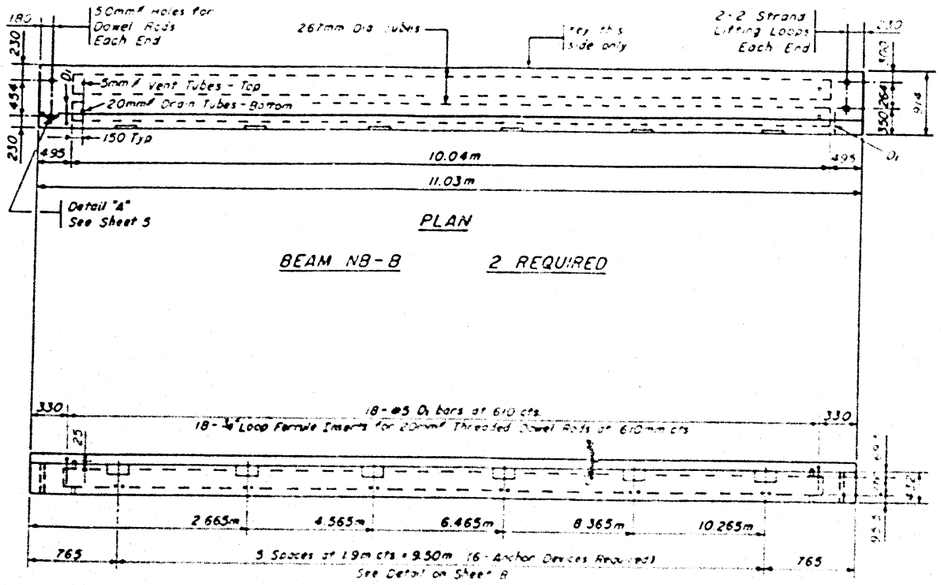

PLAN

BEAM NB-B 2 REQUIRED

ELEVATION

FINAL

SPAN 2	
SHEET 6 OF 8	SHOP NO PC-158-98
432 x 914 BEAM NB-B	

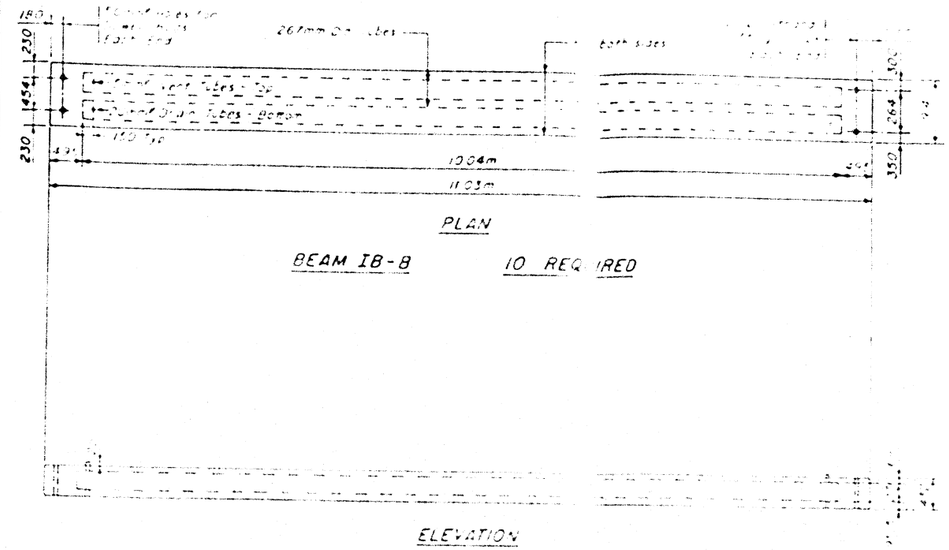

PLAN

BEAM IB-B 10 REQUIRED

ELEVATION

FINAL

SPAN 2	
SHEET 7 OF 8	SHOP NO PC-158-98
432 x 914 BEAM IB-B	

Omit Keyway on exterior side of Beams NB-B

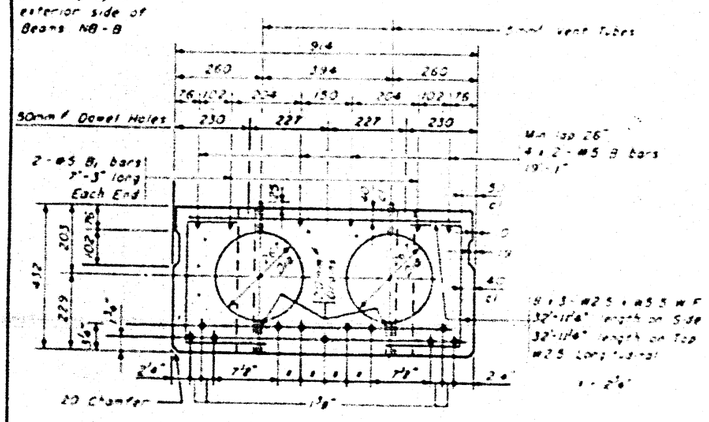

TYPICAL SECTION THRU BEAM

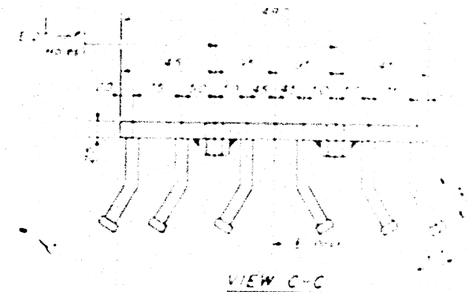

VIEW C-C

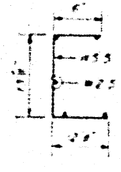

SIDE FABRIC

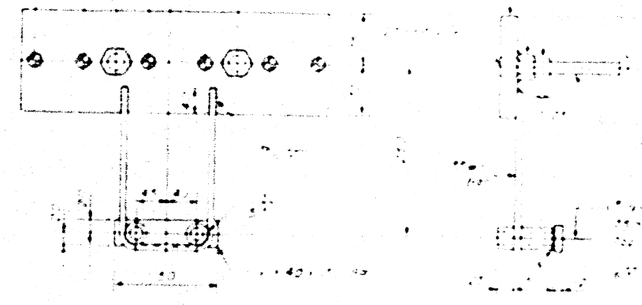

ANCHOR DEVICE

APPROVED

SHOP BILL OF MATERIAL

Bar	Size	Length	Shape	No. Req'd	Total Lbs	Remarks
B	#5	3'-1"		8	26	
B		3'-3"		4	45	
D	1	2'-8"		18	36	See Sheet 5
D	3	6'-0"		2	44	See Det. on S.
Reinforcement Bars			Lbs	265	1,180	2 Sheet
				315	630	3 Sheet
Concrete 5,000 psi, See Specs				4.2	42.0	
				4.6	9.2	
				4	4.0	
				4	4.0	
				4	4.0	
				4	4.0	
			Each	2	4	
3/4" Long Ferrule Insert Series 4 42				2	2	

SPAN 2	
SHEET 8 OF 8	SHOP NO PC-158-98
432 x 914 SHOP DETAILS	

FINAL

STATE OF ILLINOIS
DEPARTMENT OF TRANSPORTATION

ROUTE NO.	SECTION	COUNTY	TOTAL SHEETS	SHEET NO.
F.A.P. 753	142BR-1	CHRISTIAN	75	35
FED. ROAD DIST. NO. 7		ILLINOIS	FED. AID PROJECT-	

SHEET NO. 7
10 SHEETS

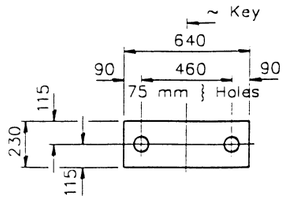

FABRIC BEARING PAD
(Interior)

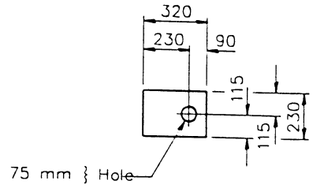

FABRIC BEARING PAD
(Exterior)

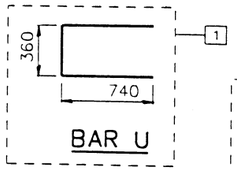

BAR U

FIXED

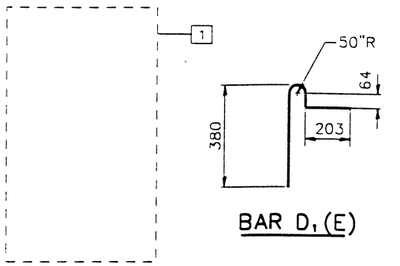

BAR D_1(E)

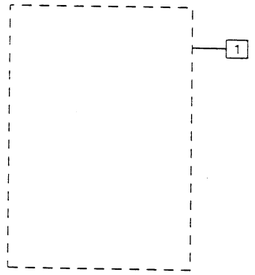

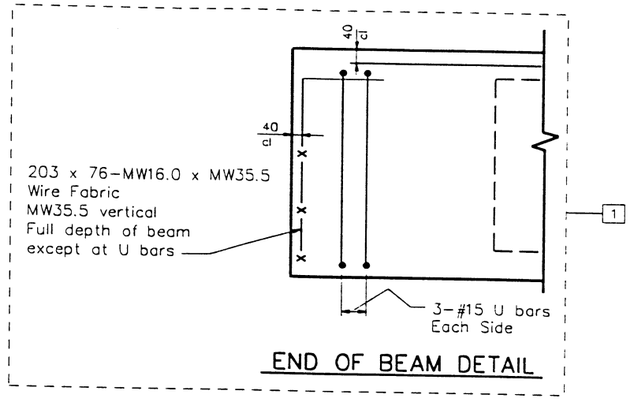

END OF BEAM DETAIL

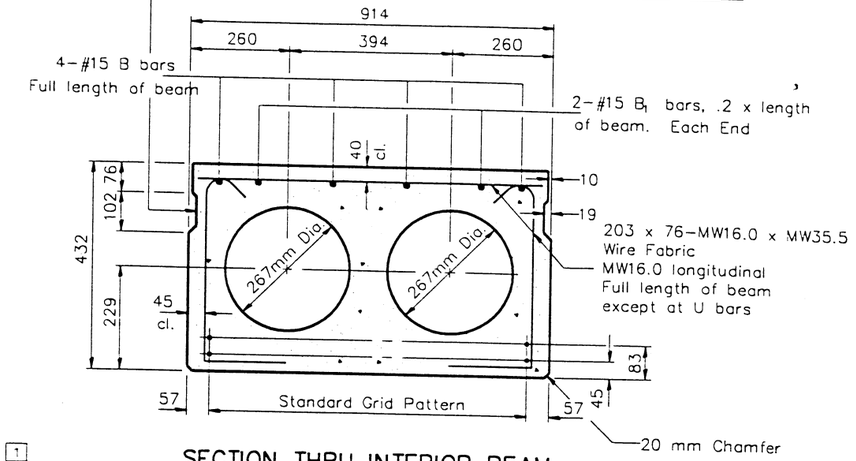

SECTION THRU INTERIOR BEAM
11-12.7 mm } Strands, Each Strand Stressed to 128,500 N.
5 Strands 45 mm up & 6 Strands 83 up

Note: Place strands symmetrically about ~ of beam.

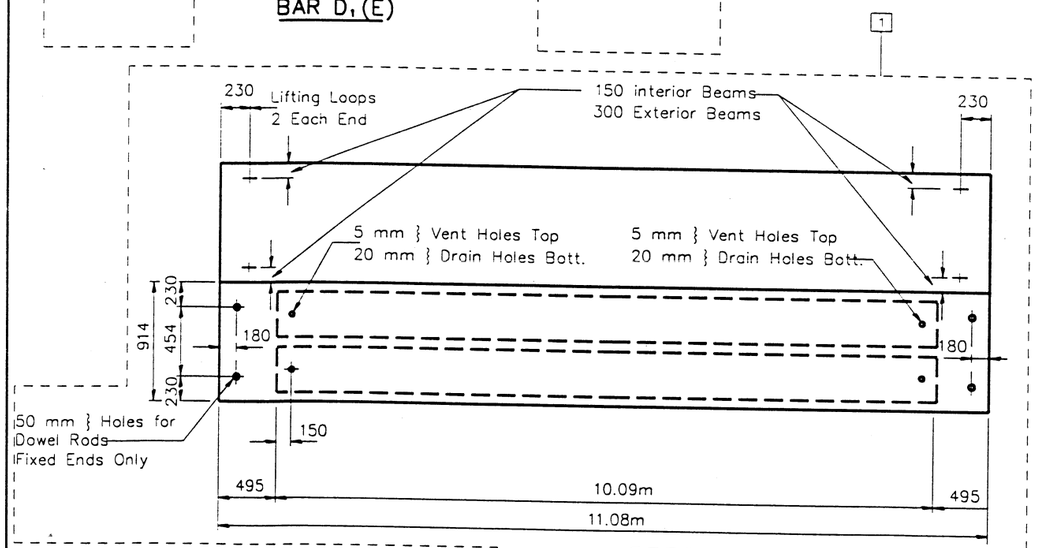

PLAN

BILL OF MATERIAL
(Per Beam)

Bar	No.	Size	Length (m)	Shape
B	4	#15	7.89	—
B_1	4	#15	1.59	—
* D_1(E)	13	#15	.762	
U	12	#10	1.840	
Precast Prestressed Conc. Deck Bms.			m^2	10.12

Reinforcement bars designated (E) shall be epoxy coated.

* Exterior Beams only.

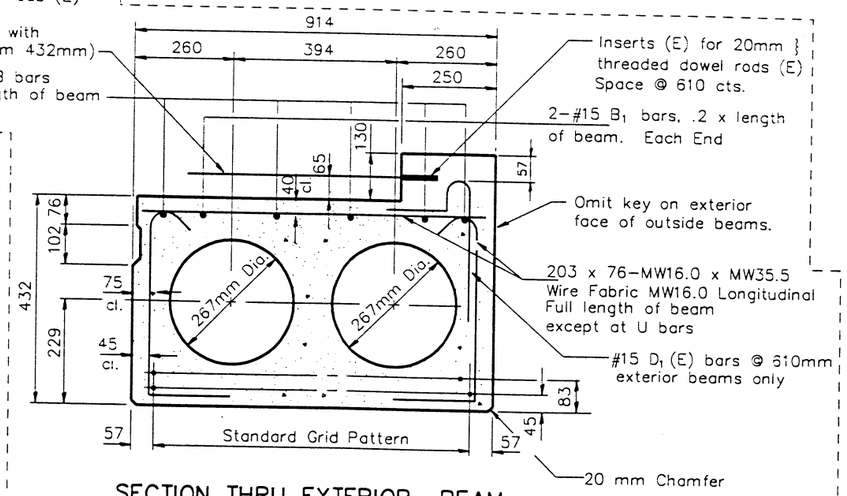

SECTION THRU EXTERIOR BEAM
11-12.7 mm } Strands, Each Strand Stressed to 128,500 N.
5 Strands 45mm up & 6 Strands 83 up

Note: Place strands symmetrically about ~ of beam.

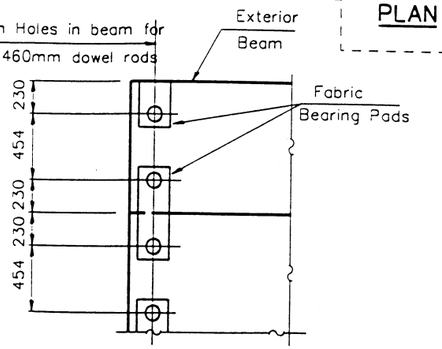

DETAIL OF BEARING PADS
UNDER DECK BEAMS

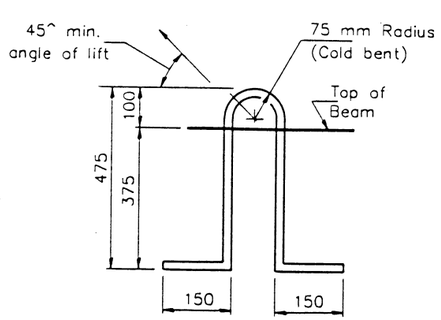

LIFTING LOOP DETAIL

NOTES

Prestressing steel shall be uncoated high strength, stress-relieved 7-wire strand (Fu=1860 MPa).
The nominal diameter shall be 12.7 mm and the nominal cross-sectional area shall be 98.71 mm^2.
Lifting loops shall be 2 - 12.7 mm strands (Fu=1860 MPa) as shown.
The 25 mm } rods in the transverse tie assembly shall be tightened to a snug fit and the threads set. Pockets that receive transverse tie bar on outside shall be filled with grout after transverse tie assembly is in place.
Reinforcement bars shall conform to the requirements of AASHTO M-31M, M-42M or M-53M Grade 400.
The bearing seat surfaces shall be adjusted by shimming to assure firm and even bearing. Two 3 mm fabric adjusting shims of the dimensions of the Exterior Bearing Pad shall be provided for each bearing.
Keyway surfaces shall be cleaned to remove form oil or other bond breaking material prior to shipment of the beams. Cleaning shall be done by sandblasting the keyway areas between top of the beam and the bottom edge of the key.
A Calcium Nitrite Corrosion Inhibitor, as covered in the Special Provisions, shall be used in the concrete for precast prestressed concrete deck beams.
Required Release Strength, f'ci, shall be 28 MPa.
An equal substitution of the low-relaxation strands for the stress-relieved strands will be permitted.
All dimensions are in millimeters (mm) except as noted.

SUPERSTRUCTURE - PPC DECK BEAMS, SPANS 1 AND 3
ILLINOIS ROUTE 104 OVER LAKE SANGCHRIS
F.A.P. 753 SECTION 142BR-1
STA. 2+511.57
CHRISTIAN COUNTY, ILLINOIS
STRUCTURE NO. 011-0020

1 AS REVISED 9-2-1998

STATE OF ILLINOIS
DEPARTMENT OF TRANSPORTATION

ROUTE NO.	SECTION	COUNTY	TOTAL SHEETS	SHEET NO.
F.A.P. 753	142BR-1	CHRISTIAN	75	36
FED. HIGHWAY DIST. NO. 7	ILLINOIS	FED. AID PROJECT-		

SHEET NO. 8
10 SHEETS

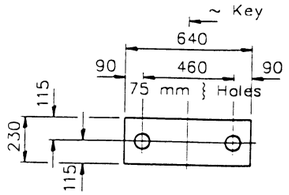

FABRIC BEARING PAD
(Interior)

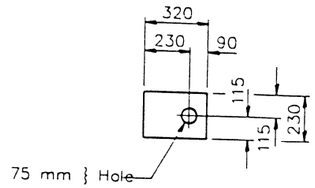

FABRIC BEARING PAD
(Exterior)

FIXED

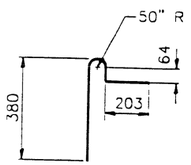

BAR D_1(E)

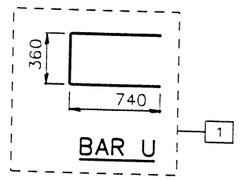

BAR U

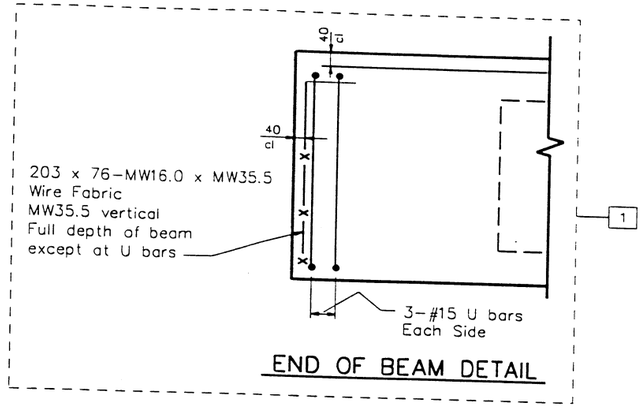

END OF BEAM DETAIL

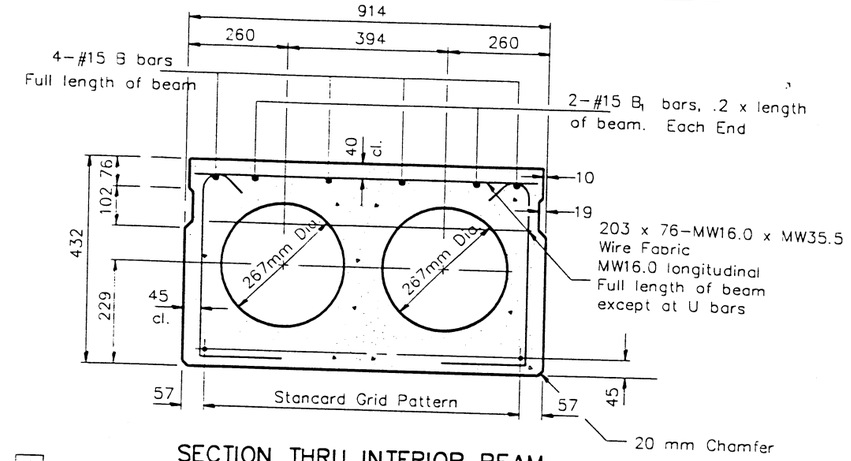

SECTION THRU INTERIOR BEAM

11-12.7 mm } Strands, Each Strand Stressed to 128,500 N.
5 Strands 45 mm up & 6 Strands 83 mm up

Note: Place strands symmetrically about ~ of beam.

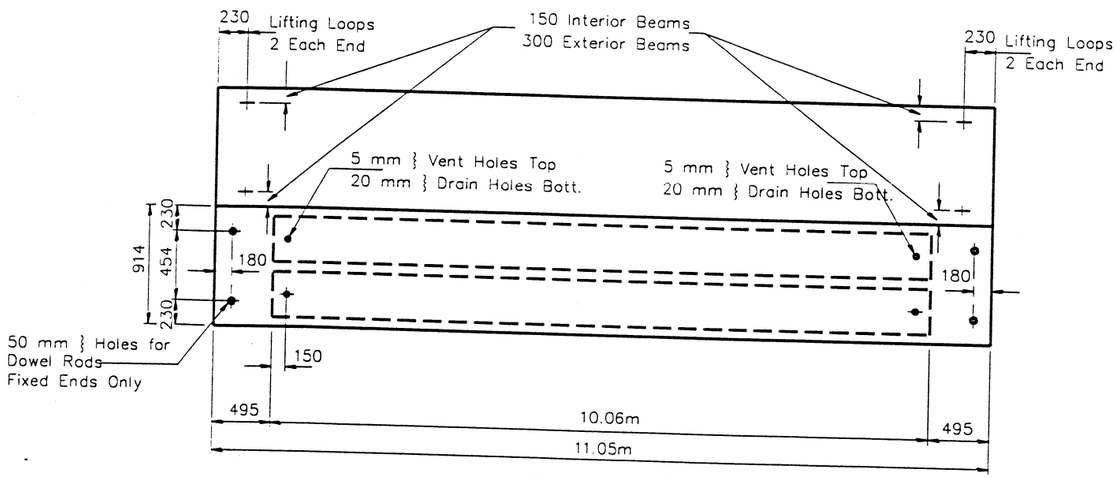

PLAN

BILL OF MATERIAL

Bar	No.	Size	Length (m)	Shape
B	4	#15	11.34	—
B_1	4	#15	2.28	—
* D_1(E)	19	#15	.762	
U	12	#10	1.840	
Precast Prestressed Conc. Deck Bms.			m^2	10.10

Reinforcement bars designated (E) shall be epoxy coated.

* Exterior Beams only.

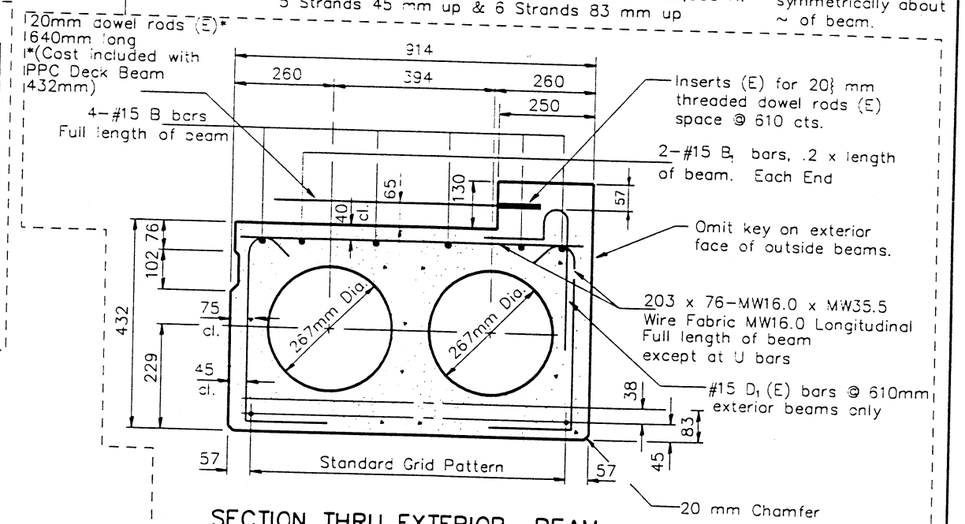

SECTION THRU EXTERIOR BEAM

11-12.7 mm } Strands, Each Strand Stressed to 128,500 N.
5 strands 45 mm up & 6 Strands 83 mm up

Note: Place strands symmetrically about ~ of beam.

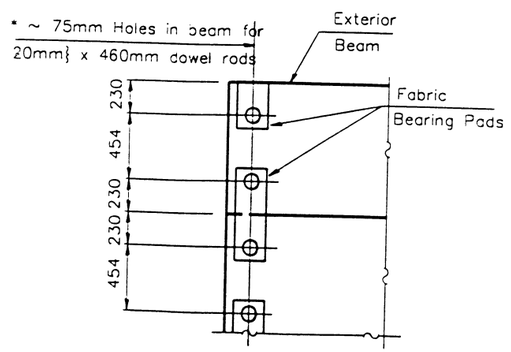

DETAIL OF BEARING PADS
UNDER DECK BEAMS

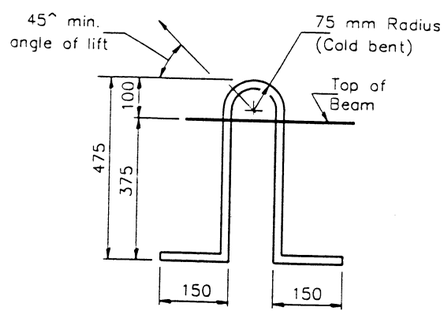

LIFTING LOOP DETAIL

NOTES

Prestressing steel shall be uncoated high strength, stress-relieved 7-wire strand (Fu=1860 MPa).
The nominal diameter shall be 12.7 mm and the nominal cross-sectional area shall be 98.71 mm^2.
Lifting loops shall be 2 - 12.7 mm strands (Fu=1860 MPa) as shown.
The 25 mm } rods in the transverse tie assembly shall be tightened to a snug fit and the threads set. Pockets that receive transverse tie bar on outside shall be filled with grout after transverse tie assembly is in place.
Reinforcement bars shall conform to the requirements of AASHTO M-31M, M-42M or M-53M Grade 400.
The bearing seat surfaces shall be adjusted by shimming to assure firm and even bearing. Two 3 mm fabric adjusting shims of the dimensions of the Exterior Bearing Pad shall be provided for each bearing.
Keyway surfaces shall be cleaned to remove form oil or other bond breaking material prior to shipment of the beams. Cleaning shall be done by sandblasting the keyway areas between top of the beam and the bottom edge of the key.
A Calcium Nitrite Corrosion Inhibitor, as covered in the Special Provisions, shall be used in the concrete for precast prestressed concrete deck beams.
Required Release Strength, f'ci, shall be 28 MPa. [1]
An equal substitution of the low-relaxation strands for the stress-relieved strands will be permitted.
All dimensions are in millimeters (mm) except as noted.

SUPERSTRUCTURE - PPC DECK BEAMS, SPANS 2
ILLINOIS ROUTE 104 OVER LAKE SANGCHRIS
F.A.P. 753 SECTION 142BR-1
STA. 2+511.57
CHRISTIAN COUNTY, ILLINOIS
STRUCTURE NO. 011-0020

[1] AS REVISED 9-2-1998

STATE OF ILLINOIS
DEPARTMENT OF TRANSPORTATION

ROUTE NO.	SECTION	COUNTY	TOTAL SHEETS	SHEET NO.
S.B.I. F.A.P. 753	142BR-1	CHRISTIAN	75	37
FED. ROAD DIST. NO. 7	ILLINOIS	FED. AID PROJECT-		

SHEET NO. 9
10 SHEETS

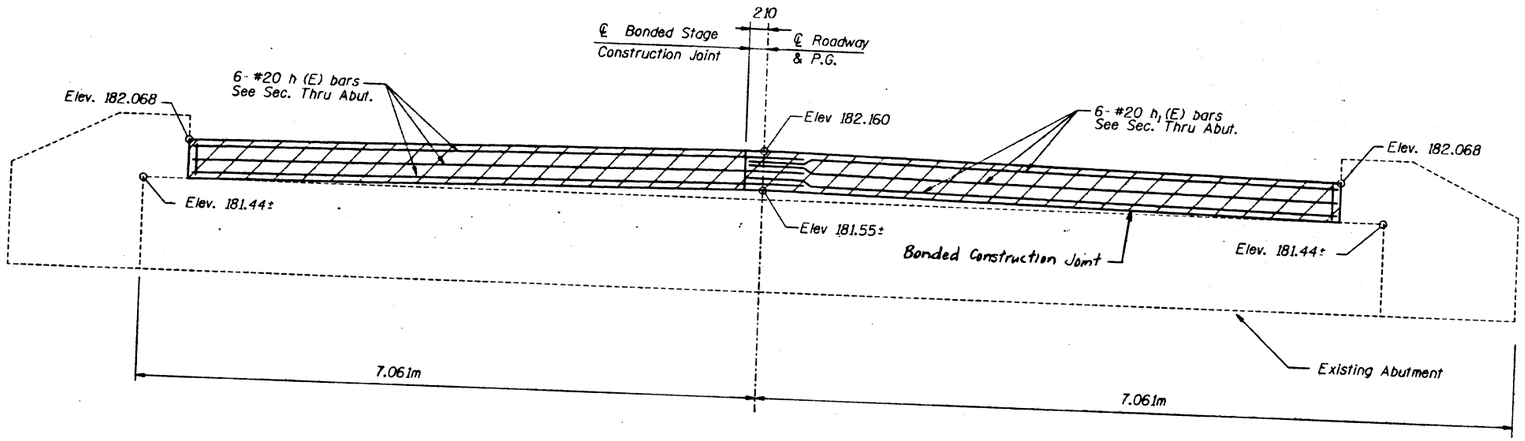

ELEVATION
(Looking West)

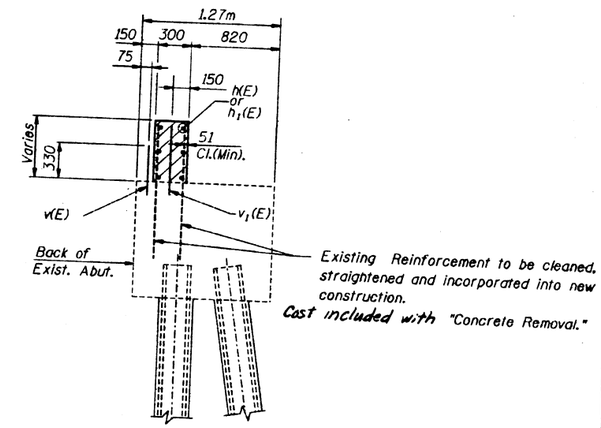

SECTION THRU ABUTMENT

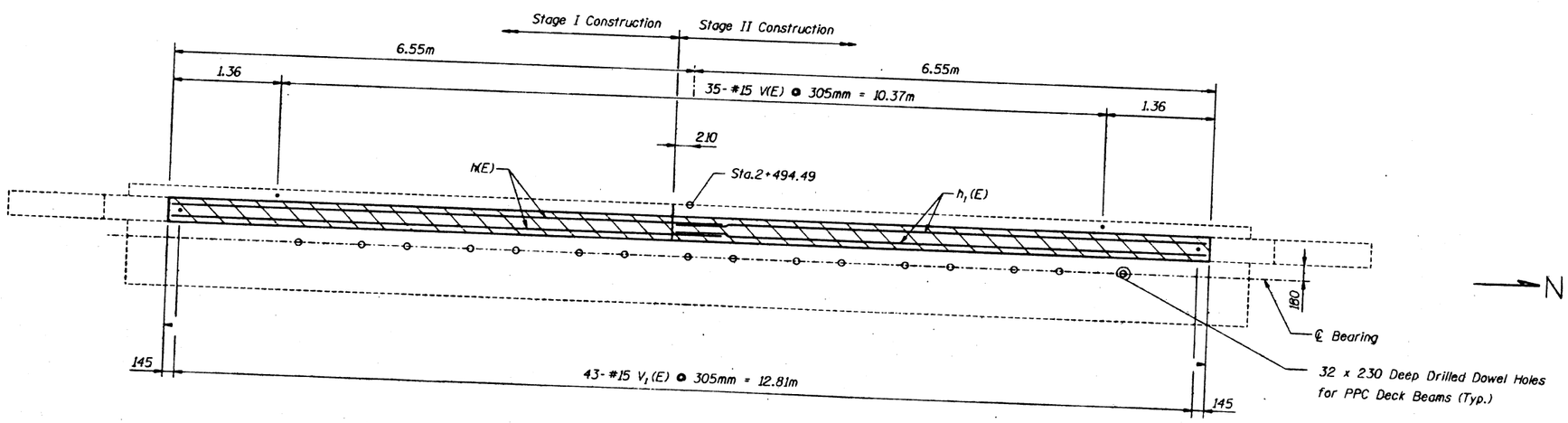

PLAN

SUBSTRUCTURE
BILL OF MATERIAL

Bar	No.	Size	Length	Shape
h(E)	6	#20	6.92	
h_1(E)	6	#20	6.74	
v(E)	35	#15	0.56	
v_1(E)	43	#15	0.78	
Concrete Superstructure			m^3	2.4
Reinforcement Bars (Epoxy Coated)			Kg	280
Concrete Removal			m^3	2.4

* Epoxy grout v(E) and v_1(E) bars in 22mm ϕ x 230mm Min. drilled holes. The grout and the method of application shall be approved by the Department. See Art. 584 of the Standard Spec's.

Hatched area indicates "Concrete removal" and "Concrete Superstructure."
Existing vertical reinforcement extending into removed areas shall be cleaned, straightened and incorporated into the new construction.
Concrete Superstructure shall be poured as shown above after the superstructure forms have been removed.
All edges shall have standard 19mm chamfers exept as noted.
Reinforcement bars designated (E) shall be epoxy coated.
Min. bar lap for #20 bar = 610 mm

WEST ABUTMENT
ILLINOIS ROUTE 104 OVER
LAKE SANGCHRIS
F.A.P. 753 SECTION 142BR-1
STA. 2+511.57
CHRISTIAN COUNTY, ILLINOIS
STRUCTURE NO. 011-0020

L1

1:\cadd\001\96043\43020s09.dgn

STATE OF ILLINOIS
DEPARTMENT OF TRANSPORTATION

ROUTE NO.	SECTION	COUNTY	TOTAL SHEETS	SHEET NO.
S.B.I. F.A.P. 753	142BR-1	CHRISTIAN	75	38
FED. ROAD DIST. NO. 7	ILLINOIS	FED. AID PROJECT-		

SHEET NO. 10
10 SHEETS

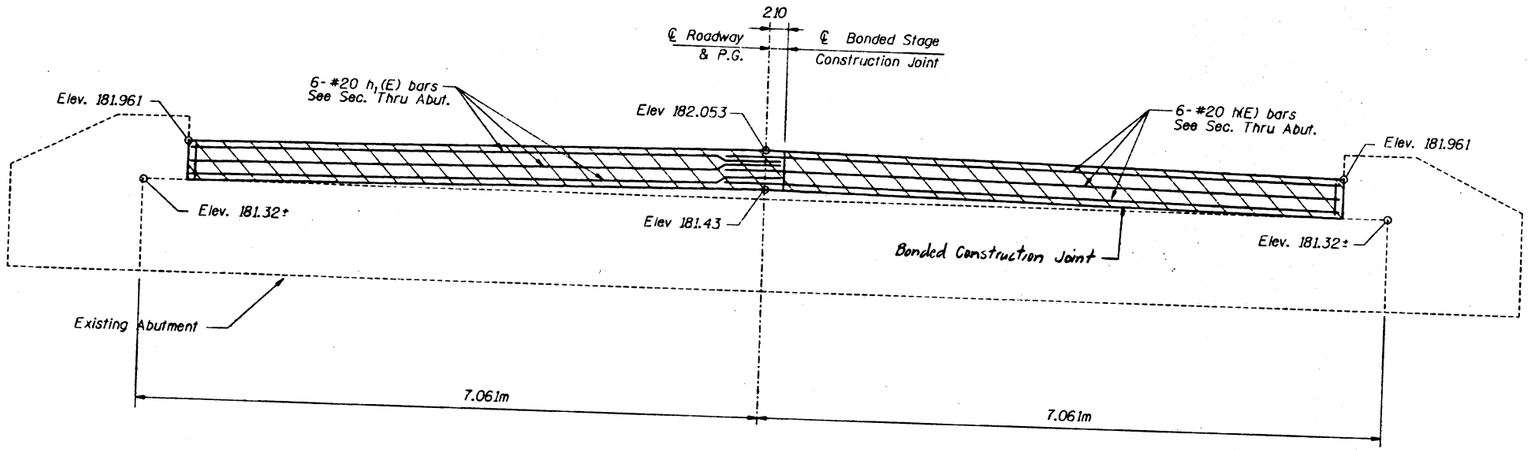

ELEVATION
(Looking West)

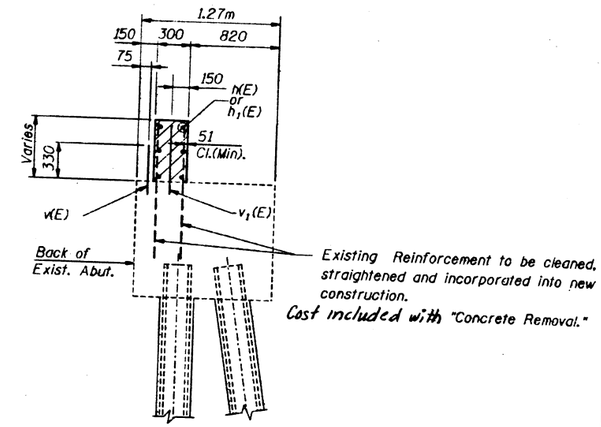

SECTION THRU ABUTMENT

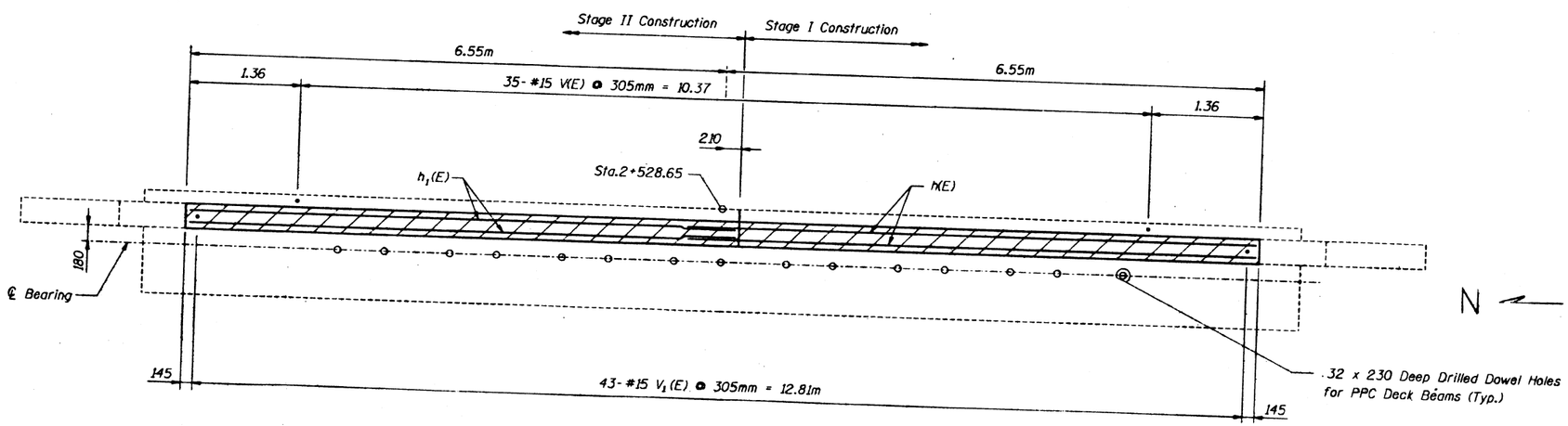

PLAN

SUBSTRUCTURE
BILL OF MATERIAL

Bar	No.	Size	Length	Shape
h(E)	6	#20	6.92	
h_1(E)	6	#20	6.74	
v(E)	35	#15	0.56	
v_1(E)	43	#15	0.78	
Concrete Superstructure			m^3	2.4
Reinforcement Bars (Epoxy Coated)			Kg	280
Concrete Removal			m^3	2.4

* Epoxy grout v(E) and v_1(E) bars in 22mm ϕ x 230mm min. drilled holes. The grout and the method of application shall be approved by the Department. See Art. 584 of the Standard Spec's.

Hatched area indicates "Concrete removal" and "Concrete Superstructure."
Existing vertical reinforcement extending into removed areas shall be cleaned, straightened and incorporated into the new construction.
Concrete Superstructure shall be poured as shown above after the superstructure forms have been removed.
All edges shall have standard 19mm chamfers exept as noted.
Reinforcement bars designated (E) shall be epoxy coated.
Min. bar lap for #20 bar = 610mm.

EAST ABUTMENT
ILLINOIS ROUTE 104 OVER
LAKE SANGCHRIS
F.A.P. 753 SECTION 142BR-1
STA. 2+511.57
CHRISTIAN COUNTY, ILLINOIS
STRUCTURE NO. 011-0020

I:\cadd\aai\96043\43020s10.dgn

SEC 142,143(XRS-1),142B-1 & 143B-1

BOND ISSUE ROUTE NO.	SEC.	COUNTY	TOTAL SHEETS	SHEET NO.
104		CHRISTIAN	60	1
F.A.P. RTE. NO. 4		ILLINOIS	PROJECT	

P-96-031-63-2

INDEX OF SHEETS ON SHEET NO. 3

STATE OF ILLINOIS
DEPARTMENT OF PUBLIC WORKS AND BUILDINGS
DIVISION OF HIGHWAYS
PLANS FOR PROPOSED
STATE BOND ISSUE HIGHWAY

SCALES { PLAN 0 50 100 150 200 300 400; PROFILE, HOR. 0 50 100 150 200 300 400; PROFILE, VERT.; CROSS-SECTIONS 0 1 2 3 4 5 10 15 20

S.B.I. ROUTE 104 SEC. 142,143(X,RS-1),142B-1 & 143B-1

CHRISTIAN COUNTY

C-96-053-64

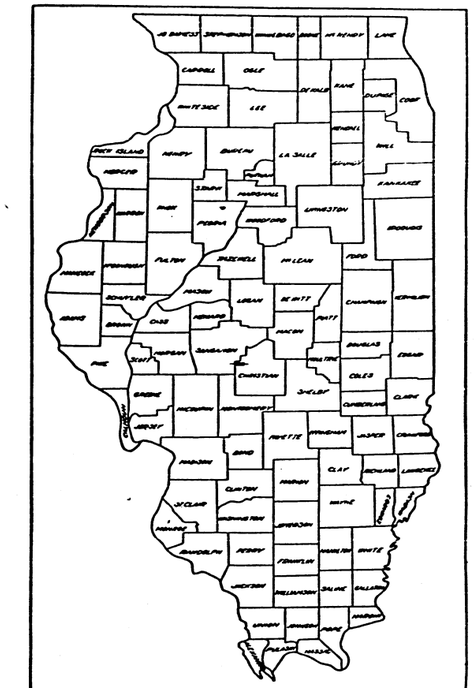

LOCATION OF SECTION INDICATED THUS:—

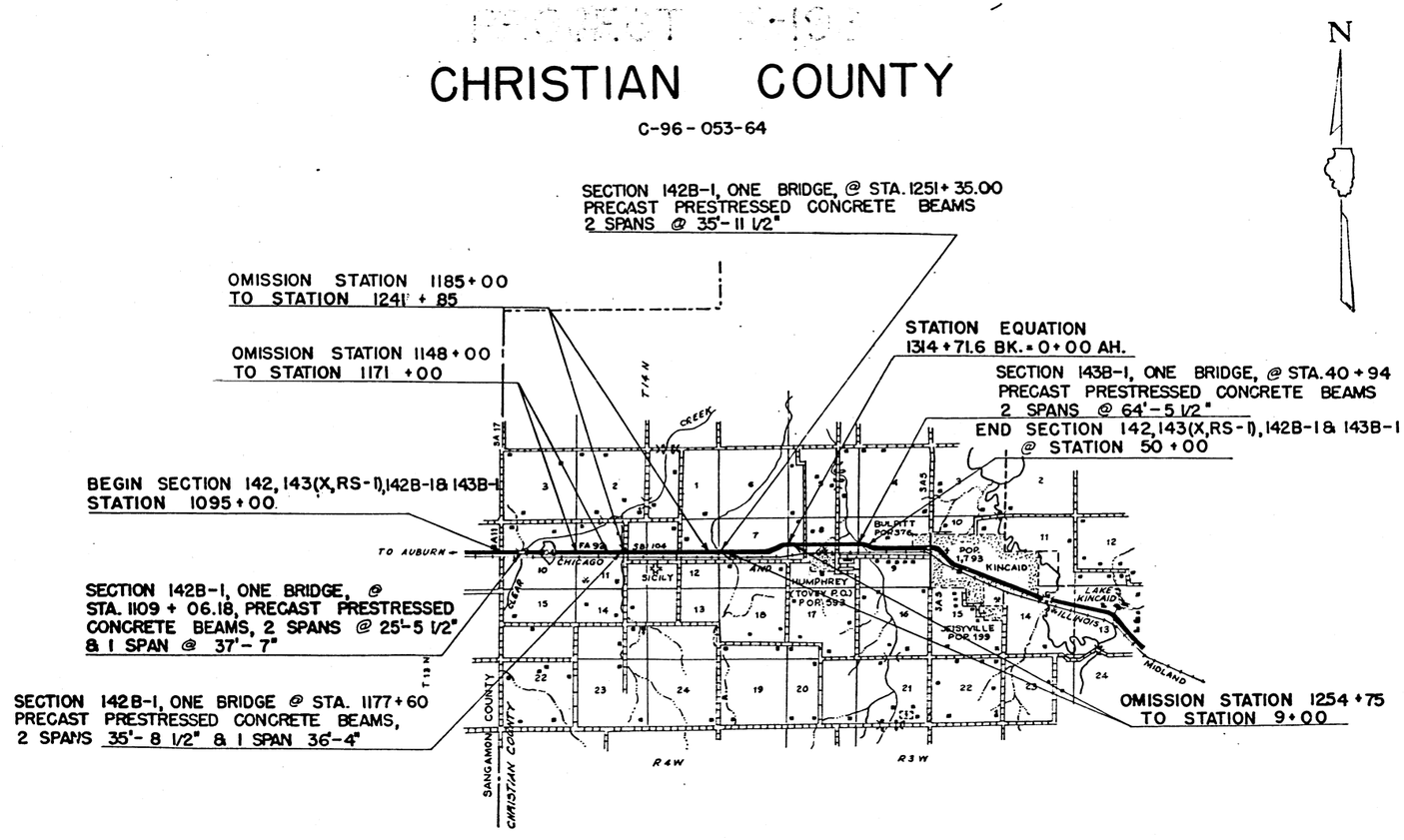

SCALE 0 1/2 1 MILE 1 1/2 2 3 4 5 MILES

NET LENGTH = 12,090.0 FT. = 2.290 MILES

STATE OF ILLINOIS
DEPARTMENT OF PUBLIC WORKS AND BUILDINGS
DIVISION OF HIGHWAYS

SUBMITTED August 7, 1964
E. K. Dierwechter
DIVISION ENGINEER

EXAMINED August 17, 1964
A. W. Van Ausdall
ENGINEER OF ROAD PLANS AND CONTRACTS

PASSED August 17, 1964
E. L. Kapp
ENGINEER OF DESIGN

APPROVED August 17, 1964
[illegible]

APPROVED August 17, 1964
Glenn R. Dolphin
DIRECTOR

6-25

CONTRACT NO. 23825

CHRISTIAN COUNTY SECTION 142, 143 (X, RS-1), 142B-1 & 143B-1 S. B. I. ROUTE 104

020-110

B.M. #3 60P. Nail in T.P. 46' Rt Sta. 1168+83
Elev. 600.66

Existing Structure: Double 10'x10' Culv. To be removed by Bridge Contr. as required after detour is open to traffic. No salvage.

STATE OF ILLINOIS
DEPARTMENT OF PUBLIC WORKS & BUILDINGS
DIVISION OF HIGHWAYS

ROUTE NO.	SECTION	COUNTY	TOTAL SHEETS	SHEET NO.
S.B.I. 104 F.A.	142B-1	Christian	60	15
REG. ROAD DIST. NO. 7	ILLINOIS	FED. AID PROJECT		

SHEET NO. 1
4 SHEETS

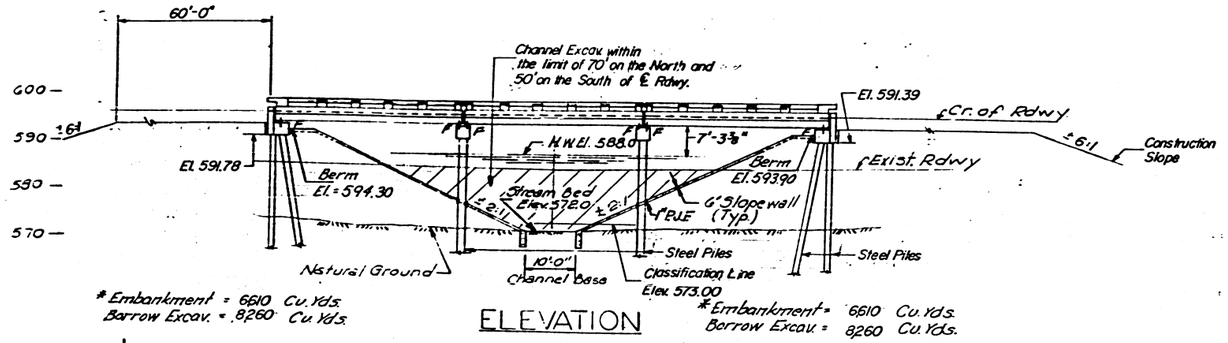

* Embankment = 6610 Cu. Yds.
Borrow Excav. = 8,260 Cu. Yds.

ELEVATION

* Embankment = 6610 Cu. Yds.
Borrow Excav. = 8,260 Cu. Yds.

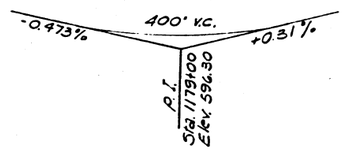

PROFILE S.B.I. 104

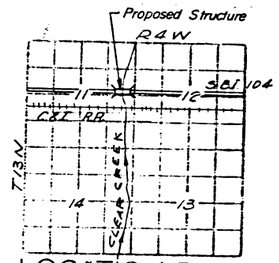

LOCATION PLAN

GENERAL NOTES

Class X Concrete shall be used through out except for handrails and precast prestressed beams.

Handrail Concrete shall be used in handrails.

The handrail concrete in the rail post and railing shall be poured in separate operations.

For Concrete in precast prestressed beams, see Supplemental Specs.

Slope Wall shall be reinforced with welded wire fabric 6"x6" mesh, weighing 58 lb. per 100 Sq. Ft.

For Item "Bridge deck Sealant", See special provisions.

Layout of slope walls may be varied to suit ground conditions in the field as directed by the Engineer.

The contractor shall drive two steel test piles, one at West Abut. and one at Pier 2, all in permanent locations, as directed by the Engineer before ordering the remaining piles.

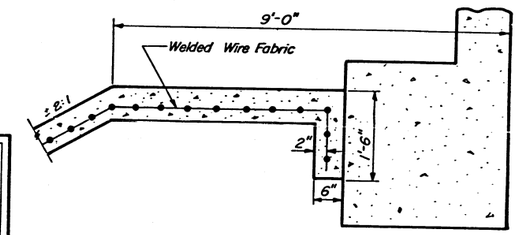

SECTION A-A

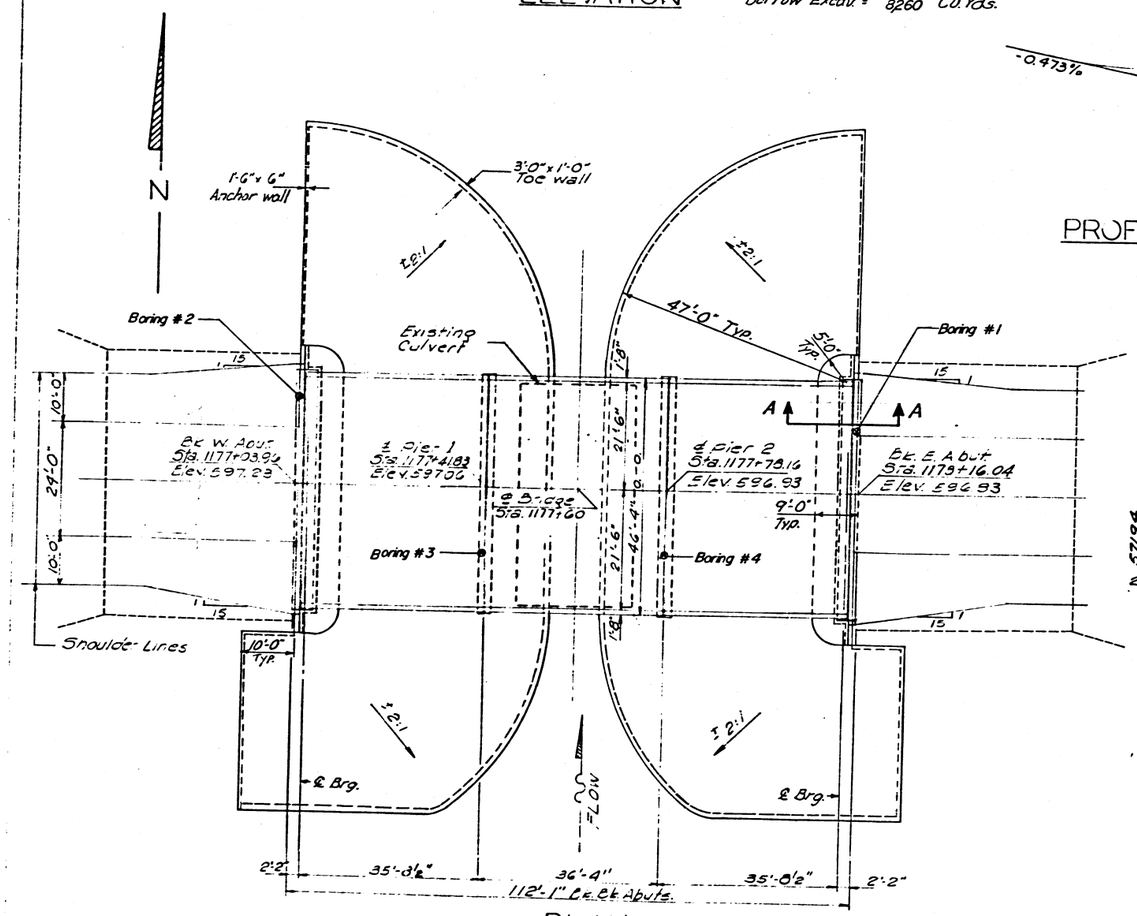

PLAN

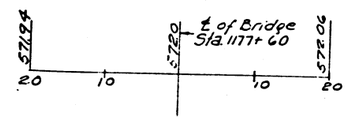

PROFILE STREAM BED

STATION 1177+60
BUILT 196 BY
STATE OF ILLINOIS
S.B.I. RT. 104 SEC. 142 B-1
LOADING HS 20

NAME PLATE
See Standard 2113-1

WATERWAY INFORMATION

Drainage Area ---------- 6.8 Sq. Mi.
Character ---- level, rolling & Cultiv.
Bridge Opening -------- Sq. Ft.
Present Opening -------- 200 Sq. Ft.
Proposed Opening -------- 483 Sq. Ft.
Ordinary Water Elev. / Low Water Elev. 585.0 (Spillway Elev.)

STRESSES

PRECAST PRESTRESSED UNITS
f'_c = 5000 psi.
f'_{ci} = 4,000 psi.
f_s = 148,000 psi. (Stress 70%)
f_{si} = 173,600 psi.

FIELD UNITS
f_c = 1400 psi. Super
f_c = 75 psi. Ftgs.
f_s = 20,000 psi. Reinf.
f_s = 1,000 psi. Sub
n = 10

LOADING HS20-44

TOTAL BILL OF MATERIAL

ITEM	UNIT	SUPER	SUB	TOTAL
Chan. Excavation	Cu. Yds.			750
Borrow Excavation	Cu. Yds.			16,520
Removal of Existing Structure	Each			1
Precast Prestressed Concrete Bridge Deck	Sq. Ft.	4894		4894
Handrail Concrete	Cu. Yds.	5.4		5.4
Class X Concrete	Cu. Yds.	20.5	82.2	102.7
Reinforcement Bars	L. bs.	2510	6110	8620
Steel Piles (10BP42)	Lin. Ft.		1055	1055
Test Piles Steel (10 BP42)	Each		2	2
Name Plates	Each	1		1
Slope Wall (6")	Sq. Yds.			1810
Bridge Deck Sealant	Sq. Yds.	520		520
Class B Excav. for strs.				50
Bit. Conc. Surface Course (1½" I-11)	Tons	43		43
Class X Concrete Encasement	Cu. Yds.		25.8	25.8

* For toe of slope wall only

OVER CLEAR CREEK
CENTRAL BRANCH
S.B.I. RTE. 104 SEC. 142 B-1
CHRISTIAN COUNTY
STA. 1177+60

DESIGNED	Tsuming Yang
CHECKED	M. Tomashko
TL	J.L.P.
DRAWN	F.M.
CHECKED	M. Tomashko

AUGUST 3 1964

EXAMINED M. G. Baumann
ENGINEER OF BRIDGES AND TYPICAL PLANS

PASSED E. A. Branch
ENGINEER OF DESIGN

APPROVED U. E. Oldfather
CHIEF ENGINEER

STATE OF ILLINOIS
DEPARTMENT OF PUBLIC WORKS & BUILDINGS
DIVISION OF HIGHWAYS

ROUTE NO.	SECTION	COUNTY	TOTAL SHEETS	SHEET NO.
S.B.I. 104	1428-1	Christian	60	16
FED. ROAD DIST. NO. 7	ILLINOIS	FED. AID PROJECT.		

SHEET NO. 2 OF 4 SHEETS

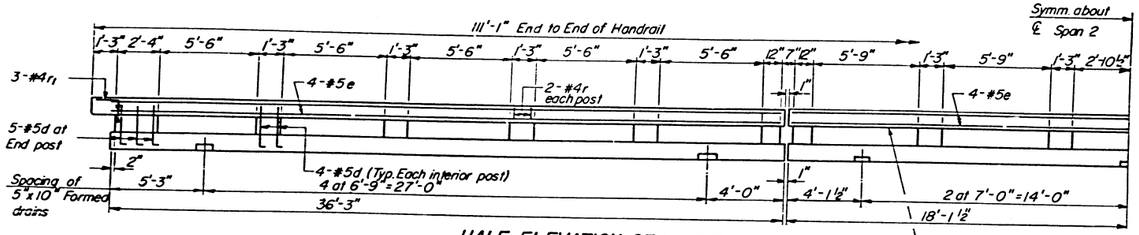

HALF ELEVATION OF HANDRAIL

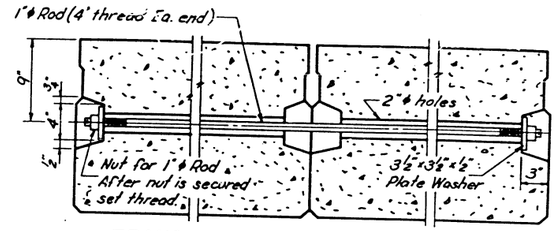

TRANSVERSE TIE ASSEMBLY

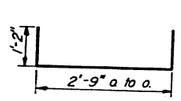

BAR u

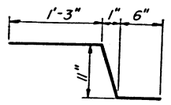

BAR z

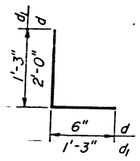

BARS d & d1

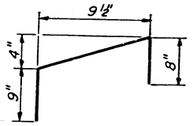

BAR r

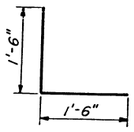

BAR r1

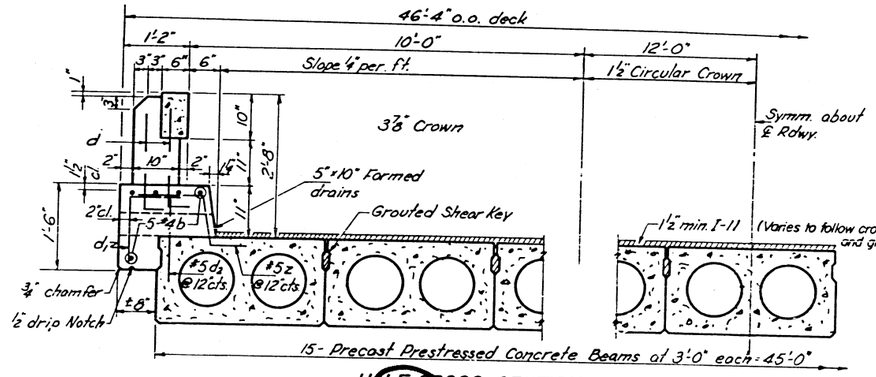

HALF CROSS SECTION

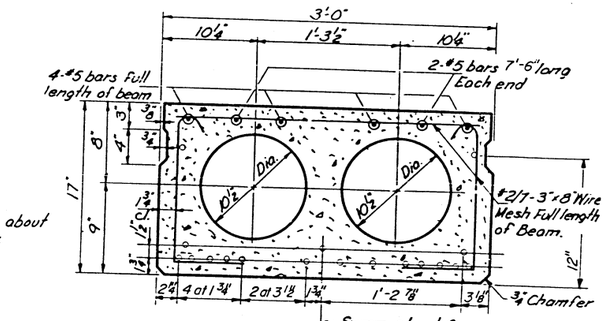

SECTION A-A

19-7 wire - 7/16" ϕ strands. Each strand stressed to 18,900
14-strands 1¾" up, 3-strands 3¼" up and 2-strands 12" up.

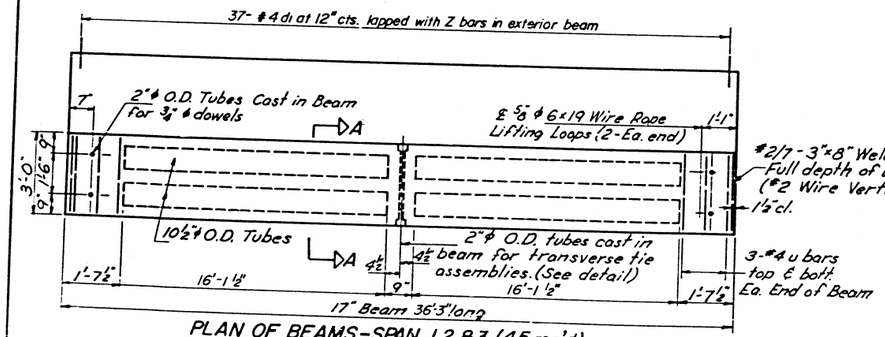

PLAN OF BEAMS-SPAN 1,2 & 3 (45 req'd)

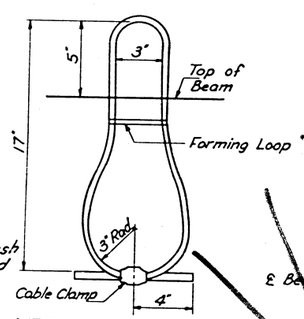

LIFTING LOOP DETAIL

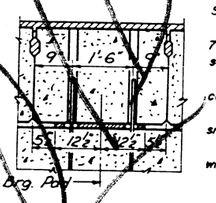

SEC. B-B

GENERAL NOTES

For Item "Precast Prestressed Concrete Bridge Deck" See Supplemental Specifications effective March 2, 1964.

Prestressing steel shall be non-galvanized high strength stress-relieved 7-wire strand. The nominal diameter shall be 7/16" and the nominal cross-sectional area shall be 0.109 square inch.

Lifting loops shall be ⅝" diameter, 6 x 19 class wire rope with fiber core and shall have a minimum ultimate tensile strength of 33,000 lbs.

The 1"ϕ rods in the transverse tie assembly shall be tightened to a snug fit and the threads set.

Pockets that receive transverse tie bar on outside of beam shall be filled with grout after transverse tie assembly is in place.

Longitudinal shear keys shall be dry packed with 1:1 sand and P.C. Mortar.

Dowel bars shall be set in drilled holes and grouted in place.

Cost of reinforcement and accessories casted into beam, of bearing pads, of furnishing and assembling transverse ties, of furnishing, drilling and grouting dowel holes, and of grouting longitudinal shear keys is included in unit price bid for "Precast Prestressed Concrete Bridge Deck"

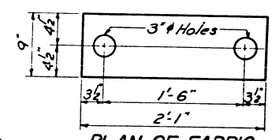

PLAN OF FABRIC BRG. PAD

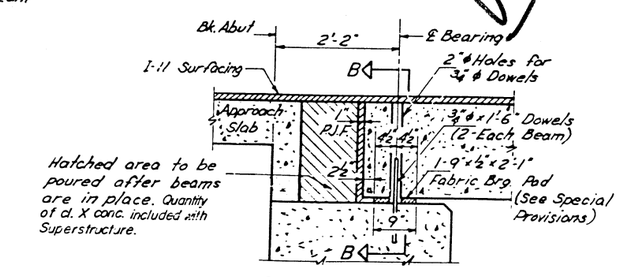

SEC. THRU ABUTMENT

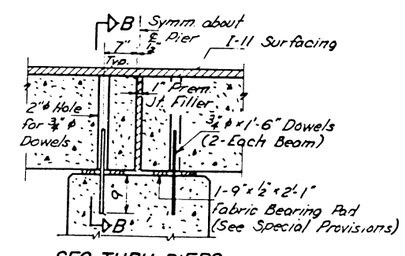

SEC. THRU PIERS

BILL OF MATERIAL

BAR	NO.	SIZE	LENGTH	SHAPE
b	30	#4	36'-0"	
d	148	#5	2'-6"	
d1	222	#4	2'-6"	
e	24	#5	36'-0"	
r	72	#4	2'-3"	
r1	12	#4	3'-0"	
17" Precast Prestressed Concrete Bridge Deck			Sq. Ft	4894
Class X Concrete			Cu. Yds.	20.5
Handrail Concrete			Cu. Yds.	5.4
Reinforcement Bars			Lbs.	2510
Bit. Conc. Surface Course (½" I-11)			Tons	43

DESIGNED	T. M. Yang
CHECKED	M. Ramachia
DRAWN	Joseph L. Putnam, Thomas A. Lewis
CHECKED	M. Ramachia

AUGUST 3, 1964

EXAMINED W. E. Baumann — ENGINEER OF BRIDGE AND TRAFFIC STRUCTURES

PASSED — ENGINEER OF BRIDGE DESIGN

APPROVED — CHIEF HIGHWAY ENGINEER

SUPERSTRUCTURE
S.B.I. RT. 104 SEC. 142 B-1
CHRISTIAN COUNTY
STA. 1177+60

STATE OF ILLINOIS
DEPARTMENT OF PUBLIC WORKS & BUILDINGS
DIVISION OF HIGHWAYS

ROUTE NO.	SECTION	COUNTY	TOTAL SHEETS	SHEET NO.
F.A. 104	142B-1	Christian	60	17
FED. ROAD DIST. NO. 7	ILLINOIS	FED. AID PROJECT.		

SHEET NO. 3 OF SHEETS

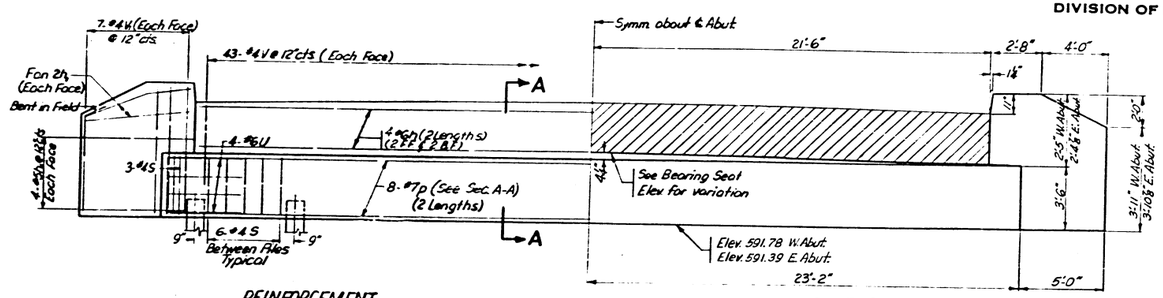

REINFORCEMENT

ELEVATION

DIMENSIONS

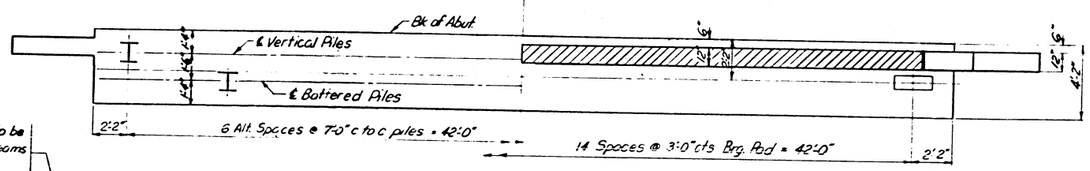

PILES

DIMENSIONS

PLAN - ABUTMENT

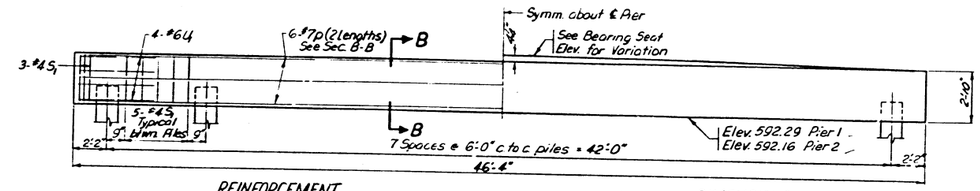

REINFORCEMENT

ELEVATION

DIMENSIONS

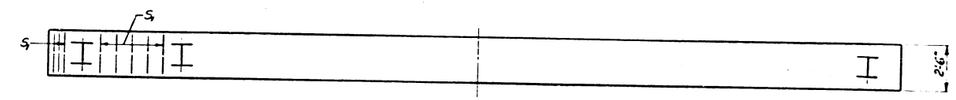

PLAN-PIER

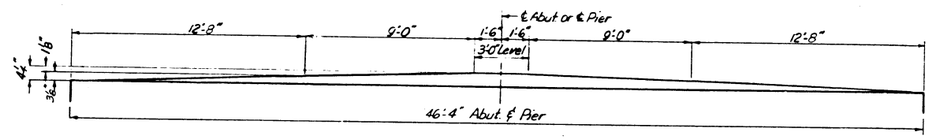

ELEVATION OF ALL BEARING SEATS

Hatched area to be poured after beams are in place. Quantity of class x conc. included with superstructure

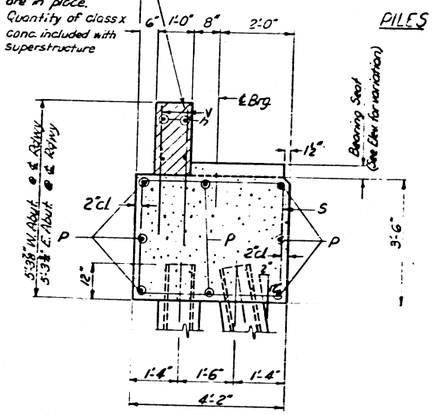

SEC. A-A

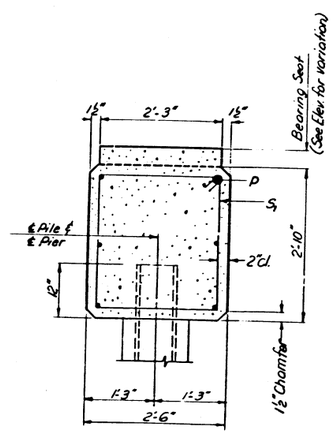

SEC. B-B

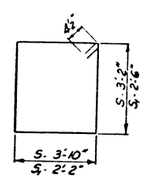

BAR S & S₁

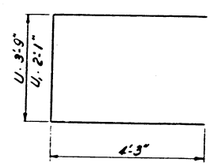

BAR U & U₁

PILE DATA - ABUTS.

Type - Steel (10 BP 42)
Capacity - 30 Tons
Est. Length - 35 ft.
No. Req'd - 14 (including one test pile @ W. Abut.)

PILE DATA - PIERS

Type - Steel (10 BP 42)
Capacity - 30 Tons
Est. Length - 40 ft.
No. Req'd - 16 (including one test pile @ pier 2)

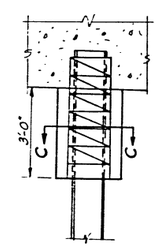

PILE DETAIL AT ABUT.

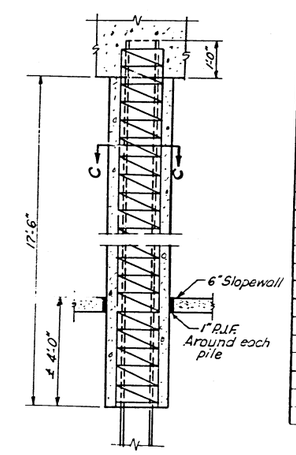

PILE DETAIL AT PIER

(2 ABUTS. & 2 PIERS)
BILL OF MATERIAL

BAR	NO.	SIZE	LENGTH	SHAPE
h	16	#6	22'-3"	—
h₁	48	#5	6'-5"	—
p	56	#7	24'-0"	—
S	84	#4	14'-9"	□
S₁	82	#4	10'-1"	□
U	16	#6	12'-3"	⊏
U₁	16	#6	10'-7"	⊏
V	172	#4	3'-3"	—
V₁	56	#4	5'-7"	—
Class X Concrete			Cu. Yds.	82.2
Reinforcement Bars			Lbs.	6110
Steel Piles (10 BP 42)			Lin. Ft.	1055
Test Piles (10 BP 42)			Each	2
Class X Conc. Encasement			Cu. Yds.	25.8

NOTE:
Space reinforcement in cap to miss dowel bars
All edges shall have standard ¾" chamfer except as noted
Pour seats monolithically with cap

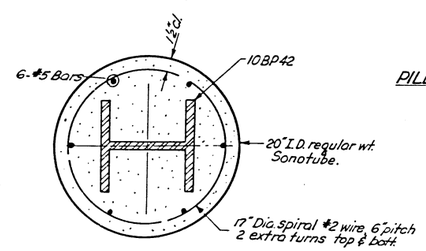

SEC. C-C

Cost of sonotube & reinf. is incidental to Class X Concrete Encasement

DESIGNED	M. Ramakrishna, T. Murty
CHECKED	Training Engr. M.T.
DRAWN	T. Ramakrishna
CHECKED	Training Engr.

AUGUST 3 1964

EXAMINED H. E. Baumann
PASSED
APPROVED H. E. Hoff

SUBSTRUCTURE
S.B.I. RT. 104 SEC. 142B-1
CHRISTIAN COUNTY
STA. 1177+60

STATE OF ILLINOIS
DEPARTMENT OF PUBLIC WORKS & BUILDINGS
DIVISION OF HIGHWAYS

ROUTE NO.	SECTION	COUNTY	TOTAL SHEETS	SHEET NO.
S.B. 104 F.A.	142B-1	Christian	60	18
FED. ROAD DIST. NO. 7	ILLINOIS	FED. AID PROJECT.		

SHEET NO. 4
4 SHEETS

PROJECT
ROUTE SBI 104
SEC 142-B-1
COUNTY Christian
BRIDGE over Clear Creek Central Branch
STA 1177+60
Date 7-20-64
Bored By J. Delaney
Checked By H. Brady

Boring No. 1
Station 1178+15
Offset 14' Lt

Surface Water El.
Groundwater El. at Completion
After ___ Hours

Description	Elevation	N	Qu t/s.f.	w (%)
Ground Surface	584.7 0			
Gray-Black Silty Clay Loam (Stiff)				
20% Strain	-5	14	1.8 B	30
20% Strain		19	2.2 B	
	575.7			
Black Silty Clay (Medium) 20% Strain	-10	11	0.8 B	32
20% Strain		11	0.6 B	
	569.7 -15			
Dark Gray-Brown Mottled Sandy Clay (Medium) 20% Strain		12	1.1 B	24
	567.7			
Light Gray Sandy Clay Till (Hard) 10% Strain		66	6.4 B	17
	565.7			
Gray Clay Till (Hard) 5% Strain	-20	100	9.7+ B	9
10% Strain	562.2	100 11"	9.1+ B	10
Brown-Gray Clay Till (Hard)				
	-25	100 11"	9.1+ B	
10% Strain	559.2			
Boring Completed				
	-30			
	-35			
	-40			
	-45			

PROJECT
ROUTE SBI 104
SEC 142-B-1
COUNTY Christian
BRIDGE over Clear Creek Central Branch
STA 1177+60
Date 7-20-64
Bored By J. Delaney
Checked By H. Brady

Boring No. 2
Station 1177+64
Offset 19' Lt

Surface Water El. 572.0
Groundwater El. at Completion 572.0
After 24 Hours 576.0

Description	Elevation	N	Qu t/s.f.	w (%)
Ground Surface	584.0 0			
Gray Black Silty Clay (Stiff)				
	-5	13	1.8 B	16
20% Strain		12	1.4 B	
	576.5			
Gray-Brown Mottled Sandy Clay (Medium) 20% Strain	-10	5	0.8 B	33
	573.5			
Dark Gray Clay		8	Lost	
	572.5			
Light Gray Clay Till (Hard) 15% Strain	-15	75	8.1 B	17
10% Strain		100	5.9 B	
10% Strain	-20	100 7"	8.2 B	
	562.0			
Gray Brown Mottled Silty Clay (Hard) 10% Strain		-70	5.2 B	11
5% Strain	-25	73	4.3 B	
	558.5			
Boring Completed				
	-30			
	-35			
	-40			
	-45			

PROJECT
ROUTE SBI 104
SEC 142-B-1
COUNTY Christian
BRIDGE over Clear Creek Central Branch
STA 1177+60
Date 7-21-64
Bored By J. Delaney
Checked By H. Brady

Boring No. 3
Station 1178+41
Offset 14' Rt

Surface Water El.
Groundwater El. at Completion
After ___ Hours

Description	Elevation	N	Qu t/s.f.	w (%)
Ground Surface	584.0 0			
Gray-Green Silty Clay (Soft)				
	-5			
20% Strain	-10	4	0.5 B	30
	571.5	4	0.5 B	36
Dark Gray Silty Clay Loam (Soft)	570.0			
Gray Sandy Clay (Medium)	569.0 -15	6	1.5 B	19
Gray Brown Mottled Sandy Clay (Stiff)	567.0			
Gray Clay Till (Hard) 10% Strain		85	7.4+ B	8
10% Strain	-20	95	8.6 B	
	562.9			
Brown Clay Till (Hard) 10% Strain		100 7"	9.1 B	
	559.5			
Brown Silty Clay (Hard) 10% Strain	-25	80	6.1 B	16
	557.0			
Gray Brown Silt (Very Dense) 5% Strain		100 9"	4.8 B	13
	555.0			
Gray Clay (Very Dense)	-30	100 8"	8.0 B	11
	553.5			
Boring Completed				
	-35			
	-40			
	-45			

PROJECT
ROUTE SBI 104
SEC 142-B-1
COUNTY Christian
BRIDGE over Clear Creek Central Branch
STA 1177+60
Date 7-22-64
Bored By J. Delaney
Checked By H. Brady

Boring No. 4
Station 1177+78
Offset 14' Rt

Surface Water El.
Groundwater El. at Completion
After ___ Hours

Description	Elevation	N	Qu t/s.f.	w (%)
Ground Surface	584.0 0			
Dark Gray-Green Silty Clay Loam (Medium)				
	-5			
20% Strain	-10	8	1.2 B	27
		6	0.6 B	
	-15	4		
		7		
	564.5			
Gray Clay Till (Hard) 15% Strain	-20	35	3.5 B	12
Gray Clay Till (Hard) 10% Strain		100 9"	9.1 B	9
	560.0			
Brown Clay Till (Hard) 10% Strain	-25	100	9.1+ B	10
	558.5			
Boring Complete				
	-30			
	-35			
	-40			
	-45			

N – Standard Penetration Test – Blows per foot to drive 2" O.D. Split Spoon Sampler 12" with 140# hammer falling 30".

Qu – Unconfined Compressive Strength – t/sf

w – Water Content – percentage of oven dry weight – %.

Type failure:
B – Bulge Failure
S – Shear Failure
E – Estimated Value

DESIGNED	T. M. Yang
CHECKED	M. Tamashiro
DRAWN	Joseph L. Ostrom
CHECKED	M. Tamashiro

AUGUST 3 1964
EXAMINED H. E. Baumann
ENGINEER OF BRIDGE AND TRAFFIC STRUCTURES
PASSED E. L. Tuttle
ENGINEER OF DESIGN
APPROVED V. E. Graff
CHIEF HIGHWAY ENGINEER

BORING DATA
S.B.I. 104 SEC. 142-B-1
CHRISTIAN COUNTY
STA. 1177+60