LEGEND

STONE RIPRAP & FILTER FABRIC (CLASS A4 UNLESS OTHERWISE NOTED)

(XXX.XX) EXISTING ELEVATION

0 50 100 150
SCALE IN FEET

IL 180 STA. 686+99
BOX CULVERT TO BE CLEANED = 59.6 FT
CLEARING AND GRUBBING = 11.1 SQ YD

688+00.93
20.09' RT
CLASS SI CONC (OUTLET) = 5.0 CU YDS

6.9 SQ YDS

CLASS SI CONC (OUTLET) = 5.5 CU YDS
689+54.90
20.38' LT

℄ IL 180

CONCRETE GUTTER, TYPE A

CONSTRUCTION LIMITS (TYP. EACH SIDE)

EX. ROW

IL 180 STA. 694+76
BOX CULVERT TO BE CLEANED = 74.6 FT
CLEARING AND GRUBBING = 11.1 SQ YD
CLASS SI CONC (OUTLET) = 1.2 CU YDS

MATCHLINE 686+00.00

686 687 688 689 690+00 691 692 693 IL 180 694 695+00 696 697 698 699 700+00

MATCHLINE 701+00.00

CLASS SI CONC (OUTLET) = 1.2 CU YDS

6.9 SQ YDS

PR. ROW

TEMP. EASEMENT

CONCRETE GUTTER, TYPE A

CLASS SI CONC (OUTLET) = 1.2 CU YDS

6.9 SQ YDS

695+21.33
20.77' RT
CLASS SI CONC (OUTLET) = 5.5 CU YDS

CONCRETE GUTTER, TYPE A

EX. ROW

CLASS SI CONC (OUTLET) = 1.2 CU YDS

IL 180 STA. 698+88
BOX CULVERT TO BE CLEANED = 99.2 FT
CLEARING AND GRUBBING = 11.1 SQ YD

KEY MAP

2250 E 2150 N 2050 N 2000 N 1950 N 1850 N 1750 N 1650 N 1500 N PARK RD LIONS DR 2300 E LEGION GALE ST MANER AVE 1400 N 1300 N US 150 IL 180

2150 E

IL 180

EX. IL 180

EX. DITCH LEFT

EX. DITCH RIGHT

STA. 694+76.10

STA. 698+88.39

STA. 687+00.00

675 670 665 660 655 650 645 640 635

639.40 640.75 642.10 643.45 644.80 646.15 647.50 648.85 650.20 651.55 652.90 654.22 655.46 656.62 657.71 658.72 659.65 660.50 661.27 661.97 662.59 663.13 663.59 664.01 664.42 664.84 665.25 665.67 666.08 666.50 666.91 667.33 667.74 668.16 668.57 668.99 669.40 669.82 670.23 670.65 671.06 671.48 671.89 672.31 672.72 673.14 673.55 673.97 674.38 674.80 675.21 675.63 676.04 676.46 676.87 677.29 677.70 678.10 678.51 678.91 679.30 - -

686+00 687+00 688+00 689+00 690+00 691+00 692+00 693+00 694+00 695+00 696+00 697+00 698+00 699+00 700+00 701+00

PLAN	SURVEYED / PLOTTED / ALIGNMENT CHECKED / R.O.W. CHECKED / CADD FILE NAME	NOTE BOOK NO.	BY	DATE

PROFILE	SURVEYED / PLOTTED / GRADES CHECKED / B.M. NOTED / STRUCTURE NOTATIONS CHKD	NOTE BOOK NO.	BY	DATE

MODEL: Default
FILE NAME: pw:\\terraengpw.bentley.com:terraengpw-01\Documents\Projects\2023\23-238-007 D4 Clorba IL 180\Design\100 - Drawings\CADD\Sheets\D468E50-SHT-DRAIN-30-TRA.dgn

TERRA ENGINEERING LTD.

USER NAME = TravisW	DESIGNED - TW	REVISED -
	DRAWN - TW/BAJ	REVISED -
PLOT SCALE = 100.0002 ' / in.	CHECKED - CL	REVISED -
PLOT DATE = 12/18/2024	DATE - 2024/03/18	REVISED -

STATE OF ILLINOIS
DEPARTMENT OF TRANSPORTATION

DRAINAGE PLAN & PROFILES
IL 180

SCALE: SHEET 30 OF 42 SHEETS STA. TO STA.

F.A.S. RTE.	SECTION	COUNTY	TOTAL SHEETS	SHEET NO.
1195	*	KNOX	409	201

CONTRACT NO. 68E50

ILLINOIS FED. AID PROJECT

*110RS-5:(111,112,108X-1)W,RS-3

SHEET	PIPE ID	CLASS/TYPE	DIA, INCH	LENGTH, FT	U/S STRUCTURE	U/S STA.	U/S OFF	U/S INVERT	D/S STRUCTURE	D/S STA.	D/S OFF	D/S INVERT	SLOPE	TBF, CU YD
31	P29	P CUL CL D 1	15	57.0	METAL FL END SEC 15	707+18.68	23.90 LT	(685.24)	METAL FL END SEC 15	706+50.13	23.71 LT	(684.78)	0.7%	4.5
31	P30	P CUL CL D 1	15	110.0	METAL FL END SEC 15	712+56.55	26.09 LT	(694.45)	METAL FL END SEC 15	711+35.21	25.61 LT	(692.32)	1.8%	4.5

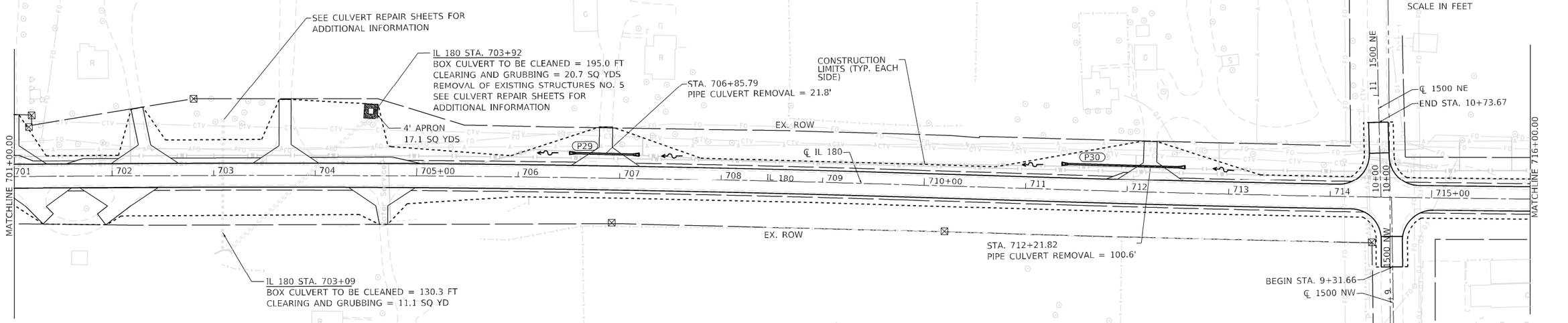

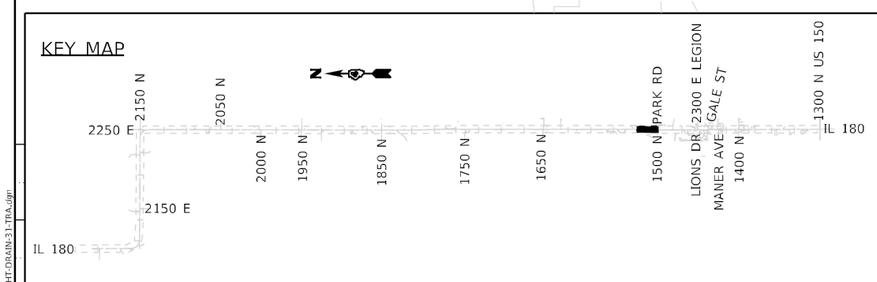

LEGEND

STONE RIPRAP & FILTER FABRIC (CLASS A4 UNLESS OTHERWISE NOTED)

(XXX.XX) EXISTING ELEVATION

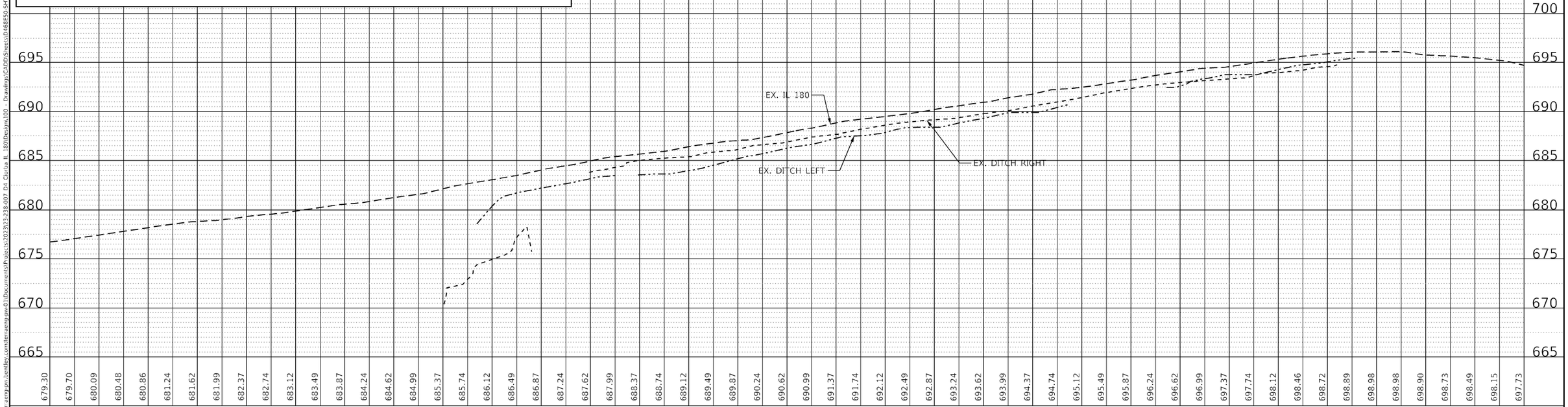

PLAN — SURVEYED / PLOTTED / ALIGNMENT CHECKED / R/W OR WAY CHECKED / CADD FILE NAME / NOTE BOOK NO. / BY / DATE

PROFILE — SURVEYED / PLOTTED / GRADES CHECKED / B.M. NOTED / STRUCTURE NOTATNS CHKD / NOTE BOOK NO. / BY / DATE

MODEL: Default
FILE NAME: pw:\\terraeng.pw.bentley.com:terraeng-pw01\Documents\Projects\2023\23-238-007 D4 Clorba IL 180\Design\100 - Drawings\CADD\Sheets\D468E50-SHT-DRAIN-31-TRA.dgn

TERRA ENGINEERING LTD.	USER NAME = TravisW	DESIGNED - TW	REVISED -
		DRAWN - TW/BAJ	REVISED -
	PLOT SCALE = 100.0002 ' / in.	CHECKED - CL	REVISED -
	PLOT DATE = 12/18/2024	DATE - 2024/09/18	REVISED -

STATE OF ILLINOIS
DEPARTMENT OF TRANSPORTATION

DRAINAGE PLAN & PROFILES
IL 180

SCALE: | SHEET 31 OF 42 SHEETS | STA. | TO STA.

F.A.S. RTE.	SECTION	COUNTY	TOTAL SHEETS	SHEET NO.
1195	*	KNOX	409	202

CONTRACT NO. 68E50

ILLINOIS | FED. AID PROJECT

*110RS-5;(111,112,108X-1)W,RS-3

SHEET	PIPE ID	CLASS/TYPE	DIA, INCH	LENGTH, FT	U/S STRUCTURE	U/S STA.	U/S OFF	U/S INVERT	D/S STRUCTURE	D/S STA.	D/S OFF	D/S INVERT	SLOPE	TBF, CU YD
32	P31	P CUL CL D 1	15	44.2	METAL FL END SEC 15	731+26.89	27.76 RT	(685.21)	METAL FL END SEC 15	730+71.83	27.91 RT	(680.89)	7.8%	2.9

LEGEND

STONE RIPRAP & FILTER FABRIC (CLASS A4 UNLESS OTHERWISE NOTED)

(XXX.XX) EXISTING ELEVATION

0 50 100 150
SCALE IN FEET

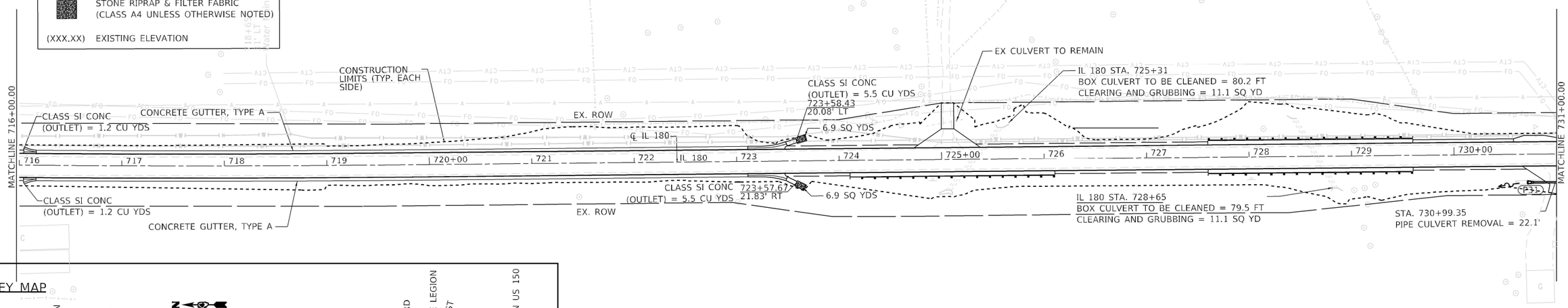

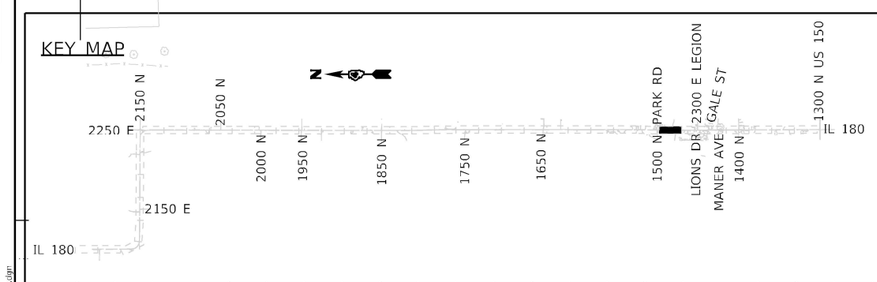

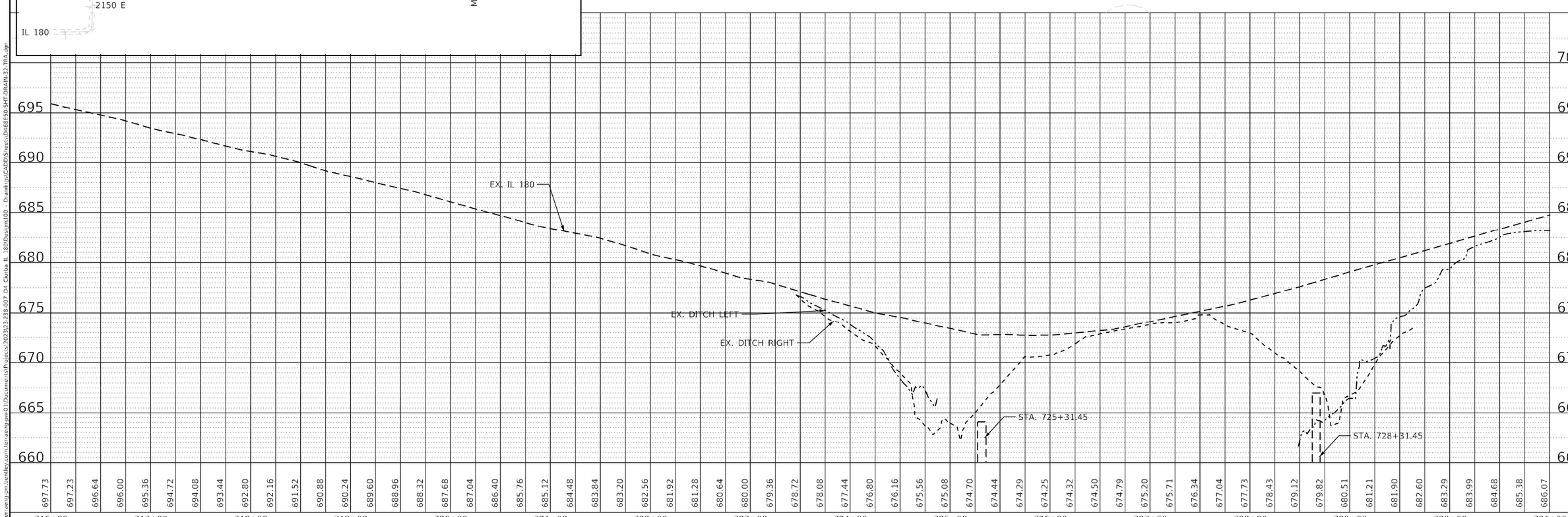

PLAN — SURVEYED / PLOTTED / ALIGNMENT CHECKED / R.O.W. CHECKED / CADD FILE NAME — NOTE BOOK NO. — BY — DATE

PROFILE — SURVEYED / PLOTTED / GRADES CHECKED / B.M. NOTED / STRUCTURE NOTATIONS CHKD — NOTE BOOK NO. — BY — DATE

MODEL: Default
FILE NAME: pw:\\terraeng-pw.bentley.com:terraeng-pw-01\Documents\Projects\2023-238-007 D4 Clorba IL 180\Design\100 - Drawings\CADD\Sheets\D468E50-SHT-DRAIN-32-TRA.dgn

TERRA ENGINEERING LTD.

USER NAME = TravisW	DESIGNED - TW	REVISED -	
	DRAWN - TW/BAJ	REVISED -	
PLOT SCALE = 100.0002 ' / in.	CHECKED - CL	REVISED -	
PLOT DATE = 12/18/2024	DATE - 2024/03/18	REVISED -	

STATE OF ILLINOIS
DEPARTMENT OF TRANSPORTATION

DRAINAGE PLAN & PROFILES
IL 180

SCALE: SHEET 32 OF 42 SHEETS STA. TO STA.

F.A.S. RTE.	SECTION	COUNTY	TOTAL SHEETS	SHEET NO.
1195	*	KNOX	409	203

CONTRACT NO. 68E50

ILLINOIS FED. AID PROJECT

*110RS-5;(111,112,108X-1)W,RS-3

SHEET	PIPE ID	CLASS/TYPE	DIA, INCH	LENGTH, FT	U/S STRUCTURE	U/S STA.	U/S OFF	U/S INVERT	D/S STRUCTURE	D/S STA.	D/S OFF	D/S INVERT	SLOPE	TBF, CU YD
33	P32	P CUL CL D 1	15	69.9	METAL FL END SEC 15	739+59.33	28.26 RT	(700.71)	METAL FL END SEC 15	738+78.26	28.87 RT	(699.37)	1.7%	6.0
33	P33	P CUL CL D 1	15	62.2	METAL FL END SEC 15	739+90.29	27.34 LT	(700.18)	METAL FL END SEC 15	739+17.21	26.82 LT	(699.15)	1.4%	5.1
33	P34	P CUL CL D 1	15	45.3	METAL FL END SEC 15	744+99.90	27.51 RT	(702.53)	METAL FL END SEC 15	744+42.98	28.10 RT	(701.15)	2.4%	3.1
33	P35	P CUL CL D 1	15	53.0	METAL FL END SEC 15	745+80.49	26.20 RT	(702.92)	METAL FL END SEC 15	745+16.02	27.34 RT	(702.7)	0.3%	4.0

LEGEND

STONE RIPRAP & FILTER FABRIC (CLASS A4 UNLESS OTHERWISE NOTED)

(XXX.XX) EXISTING ELEVATION

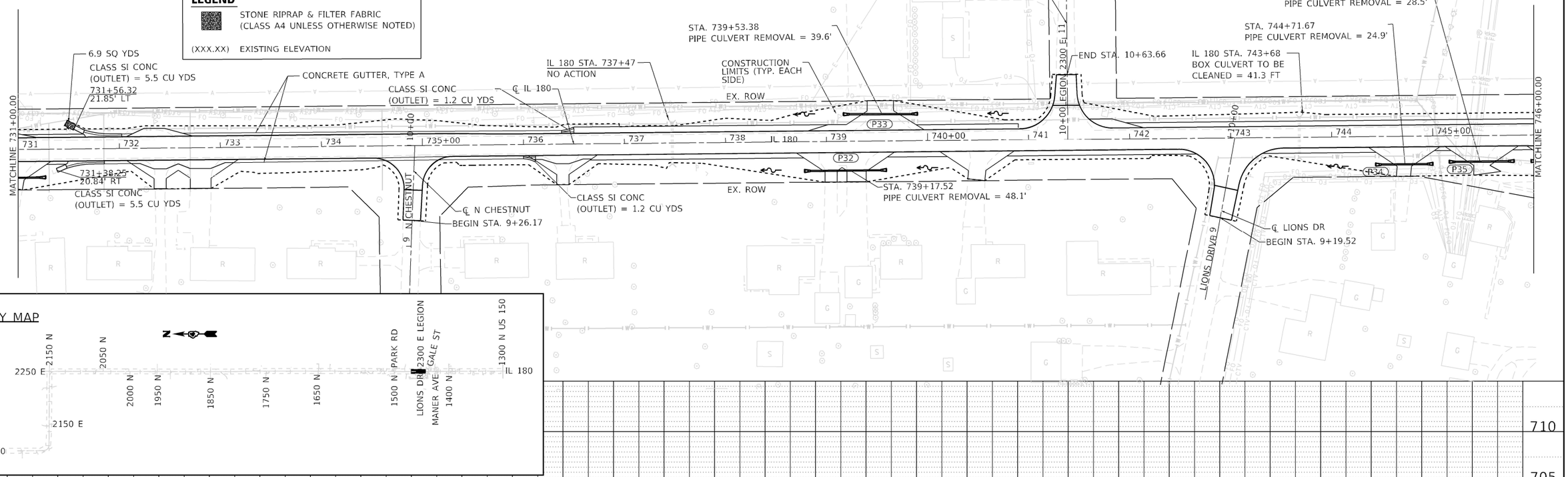

PLAN
NOTE BOOK NO.
SURVEYED
PLOTTED
ALIGNMENT CHECKED
RT. OF WAY CHECKED
CADD FILE NAME
BY
DATE

PROFILE
NOTE BOOK NO.
SURVEYED
PLOTTED
GRADES CHECKED
B.M. NOTED
STRUCTURE NOTATNS CHKD
BY
DATE

MODEL: Default
FILE NAME: pw:\\terraeng-pw.bentley.com:terraeng-pw01\Documents\Projects\2023\23-238-097 D4 Clorba IL 180\Design\100 - Drawings\CADD\Sheets\D468E50-SHT-DRAIN-33-TFA.dgn

TERRA ENGINEERING LTD.

USER NAME = TravisW	DESIGNED - TW	REVISED -	
	DRAWN - TW/BAJ	REVISED -	
PLOT SCALE = 100.0002 ' / in.	CHECKED - CL	REVISED -	
PLOT DATE = 12/18/2024	DATE - 2024/03/18	REVISED -	

STATE OF ILLINOIS
DEPARTMENT OF TRANSPORTATION

DRAINAGE PLAN & PROFILES
IL 180

SCALE: SHEET 33 OF 42 SHEETS STA. TO STA.

F.A.S. RTE.	SECTION	COUNTY	TOTAL SHEETS	SHEET NO.
1195	*	KNOX	409	204

CONTRACT NO. 68E50

ILLINOIS FED. AID PROJECT

*110RS-5:(111,112,108X-1)W,RS-3

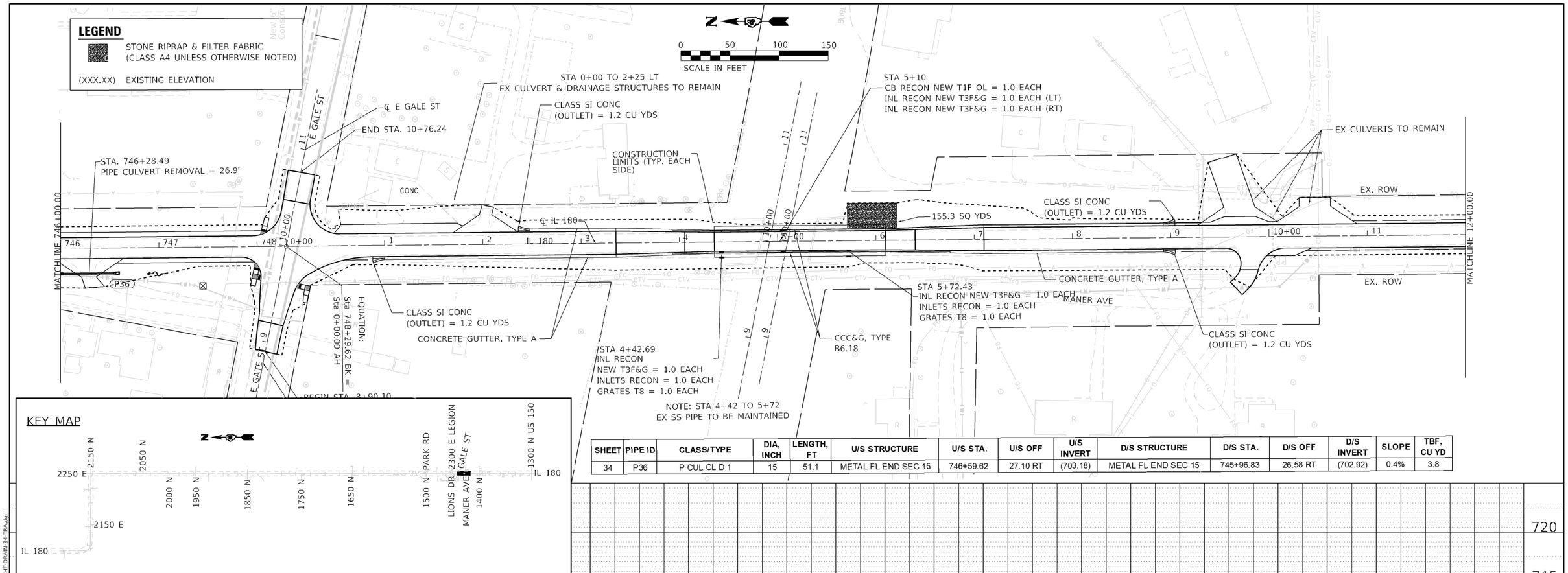

SHEET	PIPE ID	CLASS/TYPE	DIA, INCH	LENGTH, FT	U/S STRUCTURE	U/S STA.	U/S OFF	U/S INVERT	D/S STRUCTURE	D/S STA.	D/S OFF	D/S INVERT	SLOPE	TBF, CU YD
34	P36	P CUL CL D 1	15	51.1	METAL FL END SEC 15	746+59.62	27.10 RT	(703.18)	METAL FL END SEC 15	745+96.83	26.58 RT	(702.92)	0.4%	3.8

PLAN — SURVEYED / PLOTTED / ALIGNMENT CHECKED / R/W CHECKED / CADD FILE NAME / NOTE BOOK NO. / BY / DATE

PROFILE — SURVEYED / PLOTTED / GRADES CHECKED / B.M. NOTED / STRUCTURE NOTATNS CHKD / NOTE BOOK NO. / BY / DATE

MODEL: Default
FILE NAME: pw:\\terraeng.pw.bentley.com:terraeng-pw01\Documents\Projects\2023\23-238-007 D4 Clorba IL 180\Design\100 - Drawings\CADD\Sheets\D468E50-SHT-DRAIN-34-TRA.dgn

TERRA ENGINEERING LTD.

USER NAME = TravisW	DESIGNED - TW	REVISED -	
	DRAWN - TW/BAJ	REVISED -	
PLOT SCALE = 100.0002 ' / in.	CHECKED - CL	REVISED -	
PLOT DATE = 12/18/2024	DATE - 2024/12/18	REVISED -	

STATE OF ILLINOIS
DEPARTMENT OF TRANSPORTATION

DRAINAGE PLAN & PROFILES
IL 180

SCALE: SHEET 34 OF 42 SHEETS STA. TO STA.

F.A.S. RTE.	SECTION	COUNTY	TOTAL SHEETS	SHEET NO.
1195	*	KNOX	409	205

CONTRACT NO. 68E50
ILLINOIS FED. AID PROJECT

*110RS-5:(111,112,108X-1)W,RS-3

SHEET	PIPE ID	CLASS/TYPE	DIA, INCH	LENGTH, FT	U/S STRUCTURE	U/S STA.	U/S OFF	U/S INVERT	D/S STRUCTURE	D/S STA.	D/S OFF	D/S INVERT	SLOPE	TBF, CU YD
35	P36A	P CUL CL D 1	15	40.0	METAL FL END SEC 15	15+86.11	25.41 LT	(709.11)	METAL FL END SEC 15	16+38.21	25.21 LT	(708.7)	0.8%	2.4
35	P37	P CUL CL D 1	15	50.6	METAL FL END SEC 15	17+30.09	26.21 RT	(708.66)	METAL FL END SEC 15	17+92.23	27.44 RT	(708.07)	1.0%	3.7
35	P38	P CUL CL D 1	15	59.1	METAL FL END SEC 15	21+59.78	24.70 RT	(704.71)	METAL FL END SEC 15	22+30.12	23.47 RT	(704.01)	1.0%	4.7
35	P39	P CUL CL D 1	15	77.3	METAL FL END SEC 15	22+76.31	25.29 LT	(704.44)	METAL FL END SEC 15	23+64.90	23.22 LT	(707.78)	3.8%	6.9
35	P40	P CUL CL D 1	15	64.0	METAL FL END SEC 15	22+30.12	23.47 RT	(704.01)	METAL FL END SEC 15	23+12.85	22.38 RT	(703.19)	1.1%	5.3
35	P41	P CUL CL D 1	15	74.8	METAL FL END SEC 15	24+56.58	24.54 RT	(701.71)	METAL FL END SEC 15	25+42.59	27.06 RT	(700.91)	0.9%	6.6

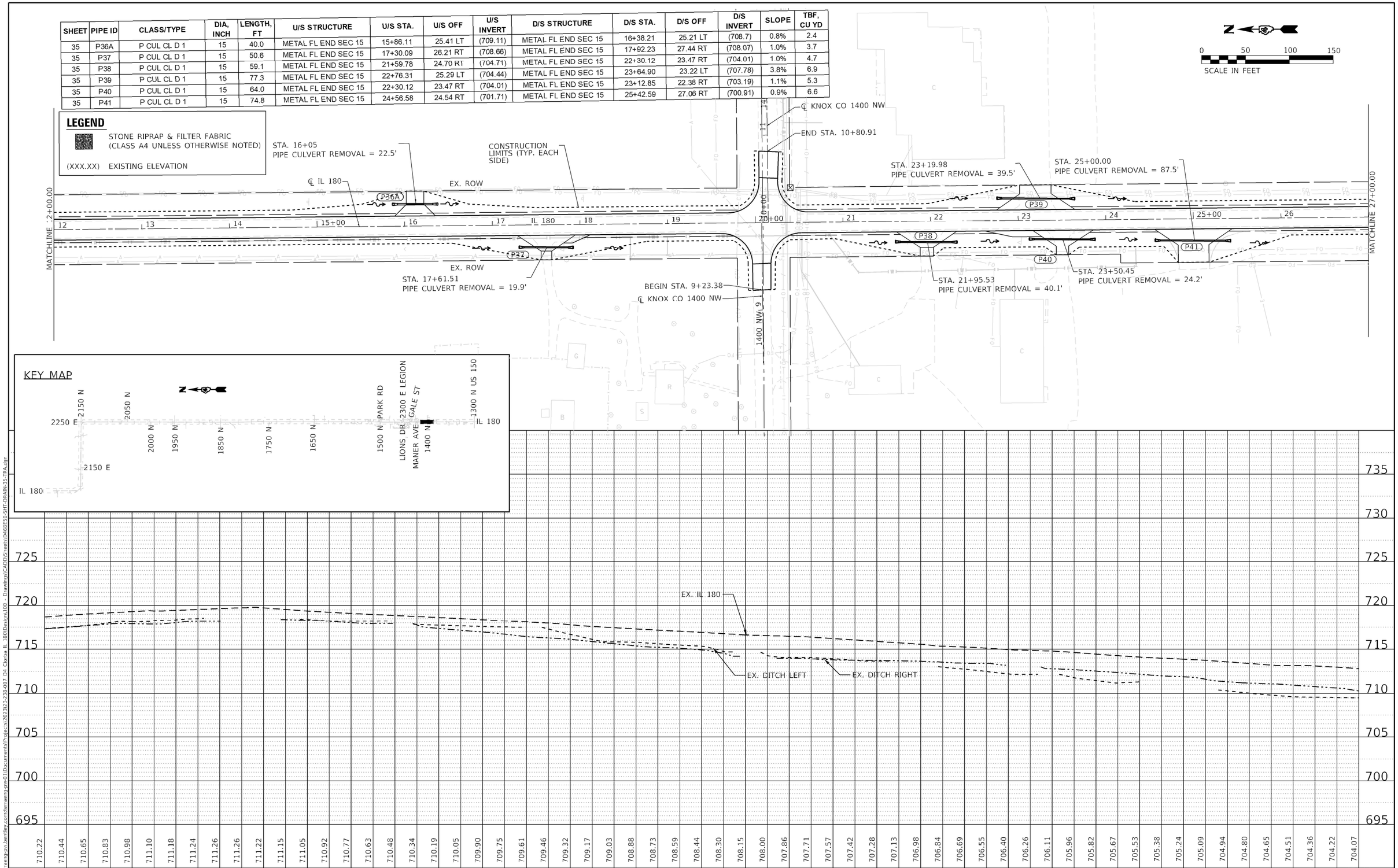

PLAN — SURVEYED / PLOTTED / ALIGNMENT CHECKED / R/W CHECKED / CADD FILE NAME / NOTE BOOK NO. / BY / DATE

PROFILE — SURVEYED / PLOTTED / GRADES CHECKED / B.M. NOTED / STRUCTURE NOTATNS CHKD / NOTE BOOK NO. / BY / DATE

MODEL: Default
FILE NAME: pw:\\terraeng.pw.bentley.com:terraeng-pw01\Documents\Projects\2023\23-238-007 D4 Clorba IL 180\Design\100 - Drawings\CADD\Sheets\D468E50-SHT-DRAIN-35-TRA.dgn

TERRA ENGINEERING LTD.

USER NAME = TravisW	DESIGNED - TW	REVISED -
	DRAWN - TW/BAJ	REVISED -
PLOT SCALE = 100.0002 ' / in.	CHECKED - CL	REVISED -
PLOT DATE = 12/18/2024	DATE - 2024/03/18	REVISED -

STATE OF ILLINOIS
DEPARTMENT OF TRANSPORTATION

DRAINAGE PLAN & PROFILES
IL 180

SCALE: SHEET 35 OF 42 SHEETS STA. TO STA.

F.A.S. RTE.	SECTION	COUNTY	TOTAL SHEETS	SHEET NO.
1195	*	KNOX	409	206

CONTRACT NO. 68E50

ILLINOIS FED. AID PROJECT

*110RS-5:(111,112,108X-1)W,RS-3

LEGEND

STONE RIPRAP & FILTER FABRIC (CLASS A4 UNLESS OTHERWISE NOTED)

(XXX.XX) EXISTING ELEVATION

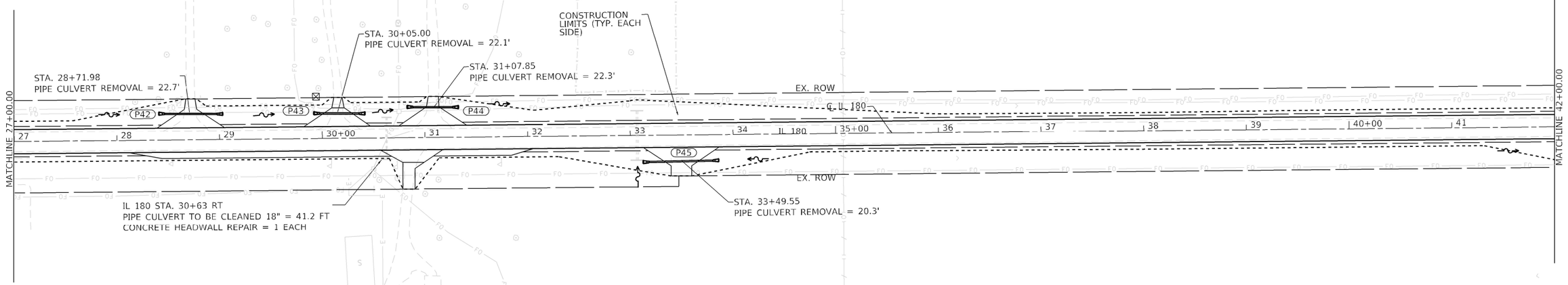

KEY MAP

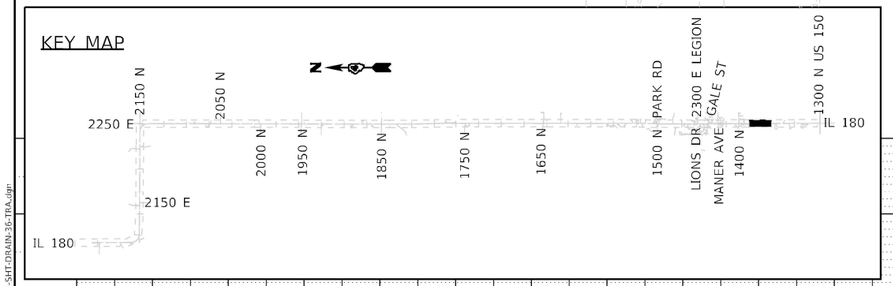

SHEET	PIPE ID	CLASS/TYPE	DIA, INCH	LENGTH, FT	U/S STRUCTURE	U/S STA.	U/S OFF	U/S INVERT	D/S STRUCTURE	D/S STA.	D/S OFF	D/S INVERT	SLOPE	TBF, CU YD
36	P42	P CUL CL D 1	15	51.3	METAL FL END SEC 15	28+41.20	26.07 LT	(699.93)	METAL FL END SEC 15	29+03.66	23.97 LT	(699.93)	0.0%	3.8
36	P43	P CUL CL D 1	15	38.6	METAL FL END SEC 15	29+92.23	24.22 LT	(699.43)	METAL FL END SEC 15	30+42.10	25.14 LT	(697.69)	3.5%	2.3
36	P44	P CUL CL D 1	15	38.6	METAL FL END SEC 15	30+83.22	28.84 LT	(697.69)	METAL FL END SEC 15	31+33.10	30.66 LT	(697.09)	1.2%	2.3
36	P45	P CUL CL D 1	15	62.3	METAL FL END SEC 15	33+86.14	23.54 RT	(700.51)	METAL FL END SEC 15	33+12.44	25.67 RT	(698.7)	2.5%	5.1

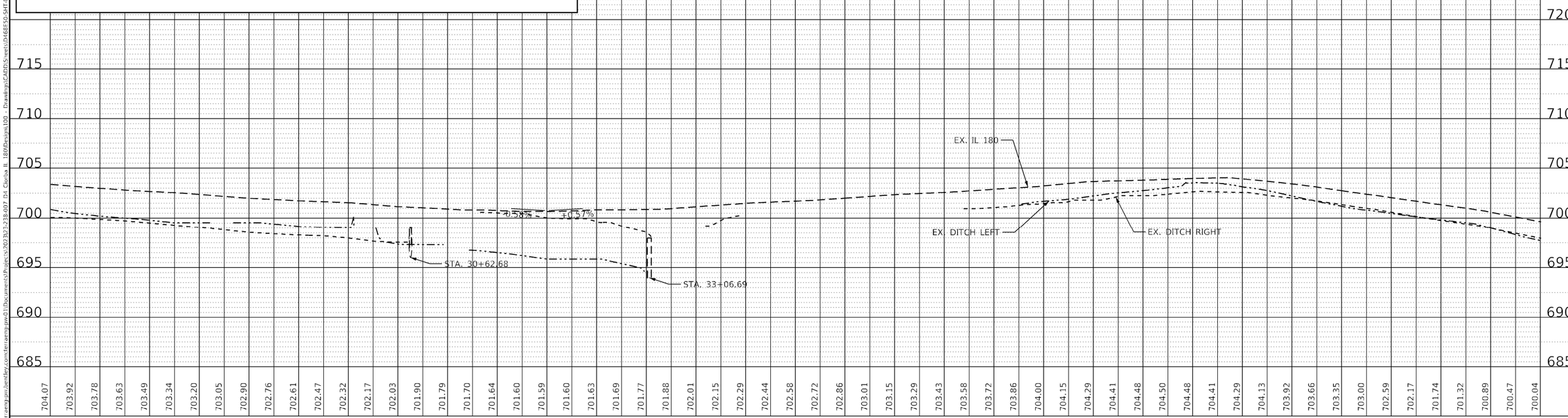

PLAN — SURVEYED / PLOTTED / ALIGNMENT CHECKED / R/W CHECKED / CADD FILE NAME — NOTE BOOK NO. — BY — DATE

PROFILE — SURVEYED / PLOTTED / GRADES CHECKED / B.M. NOTED / STRUCTURE NOTATNS CHKD — NOTE BOOK NO. — BY — DATE

MODEL: Default
FILE NAME: pw:\\terraeng.pw.bentley.com:terraeng-pw01\Documents\Projects\2023\23-238-007 D4 Clorba IL 180\Design\100 - Drawings\CADD\Sheets\D468E50-SHT-DRAIN-36-TRA.dgn

TERRA ENGINEERING LTD.

USER NAME = TravisW	DESIGNED - TW	REVISED -	
	DRAWN - TW/BAJ	REVISED -	
PLOT SCALE = 100.0002 ' / in.	CHECKED - CL	REVISED -	
PLOT DATE = 12/18/2024	DATE - 2024/03/18	REVISED -	

STATE OF ILLINOIS
DEPARTMENT OF TRANSPORTATION

DRAINAGE PLAN & PROFILES
IL 180

SCALE: SHEET 36 OF 42 SHEETS STA. TO STA.

F.A.S. RTE.	SECTION	COUNTY	TOTAL SHEETS	SHEET NO.
1195	*	KNOX	409	207

CONTRACT NO. 68E50

ILLINOIS FED. AID PROJECT

*110RS-5:(111,112,108X-1)W,RS-3

LEGEND

STONE RIPRAP & FILTER FABRIC (CLASS A4 UNLESS OTHERWISE NOTED)

(XXX.XX) EXISTING ELEVATION

0 50 100 150
SCALE IN FEET

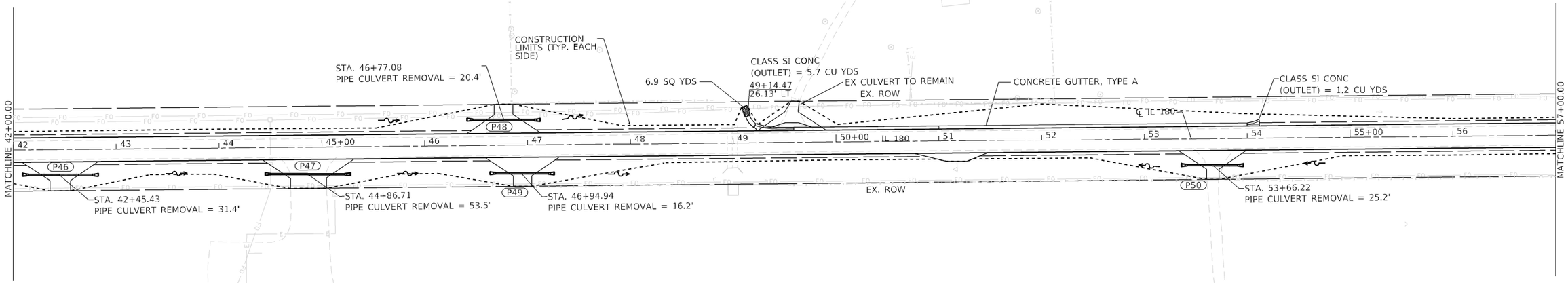

KEY MAP

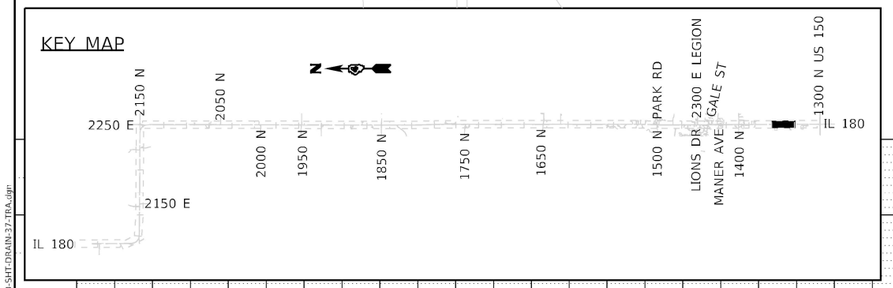

SHEET	PIPE ID	CLASS/TYPE	DIA, INCH	LENGTH, FT	U/S STRUCTURE	U/S STA.	U/S OFF	U/S INVERT	D/S STRUCTURE	D/S STA.	D/S OFF	D/S INVERT	SLOPE	TBF, CU YD
37	P46	P CUL CL D 1	15	62.6	METAL FL END SEC 15	42+08.91	23.37 RT	(698.17)	METAL FL END SEC 15	42+82.32	24.91 RT	(696.75)	1.9%	5.2
37	P47	P CUL CL D 1	15	71.8	METAL FL END SEC 15	44+44.75	24.69 RT	(693.73)	METAL FL END SEC 15	45+27.63	26.26 RT	(691.73)	2.4%	6.3
37	P48	P CUL CL D 1	15	60.0	METAL FL END SEC 15	46+41.62	25.46 LT	(690.25)	METAL FL END SEC 15	47+12.54	24.46 LT	(689.02)	1.7%	4.8
37	P49	P CUL CL D 1	15	51.4	METAL FL END SEC 15	46+63.42	27.27 RT	(689.06)	METAL FL END SEC 15	47+25.70	28.53 RT	(688.56)	0.8%	3.8
37	P50	P CUL CL D 1	15	49.0	METAL FL END SEC 15	53+96.07	26.46 RT	(694.12)	METAL FL END SEC 15	53+35.99	26.22 RT	(693.61)	0.8%	3.5

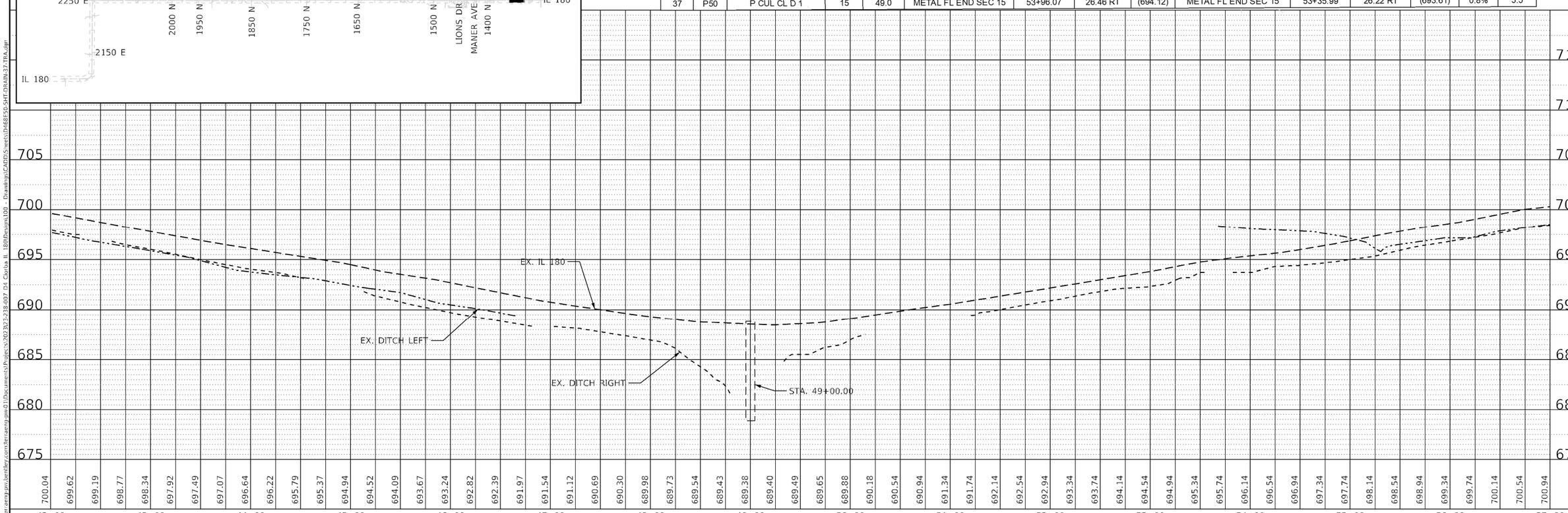

PLAN — SURVEYED / PLOTTED / ALIGNMENT CHECKED / R/W CHECKED / CADD FILE NAME — NOTE BOOK NO. — BY — DATE

PROFILE — SURVEYED / PLOTTED / GRADES CHECKED / B.M. NOTED / STRUCTURE NOTATIONS CHKD — NOTE BOOK NO. — BY — DATE

MODEL: Default
FILE NAME: pw:\\terraeng-pw.bentley.com:terraeng-pw01\Documents\Projects\2023\23-238-007 D4 Clarba IL 180\Design\100 - Drawings\CADD\Sheets\D468E50-SHT-DRAIN-37-TRA.dgn

TERRA ENGINEERING LTD.

USER NAME = TravisW	DESIGNED - TW	REVISED -
	DRAWN - TW/BAJ	REVISED -
PLOT SCALE = 100.0002 ' / in.	CHECKED - CL	REVISED -
PLOT DATE = 12/18/2024	DATE - 2024/03/18	REVISED -

STATE OF ILLINOIS
DEPARTMENT OF TRANSPORTATION

DRAINAGE PLAN & PROFILES
IL 180

SCALE: SHEET 37 OF 42 SHEETS STA. TO STA.

F.A.S. RTE.	SECTION	COUNTY	TOTAL SHEETS	SHEET NO.
1195	*	KNOX	409	208

CONTRACT NO. 68E50

ILLINOIS FED. AID PROJECT

*110RS-5;(111,112,108X-1)W,RS-3

LEGEND

STONE RIPRAP & FILTER FABRIC (CLASS A4 UNLESS OTHERWISE NOTED)

(XXX.XX) EXISTING ELEVATION

0 50 100 150
SCALE IN FEET

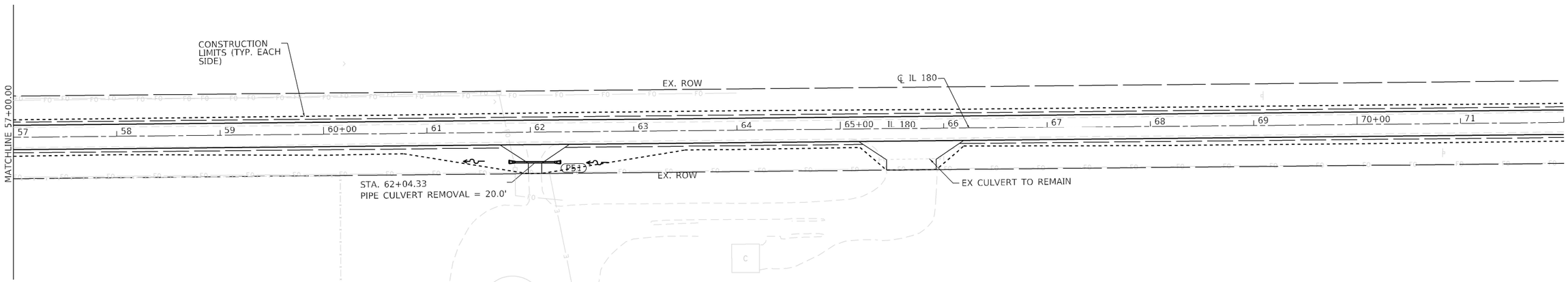

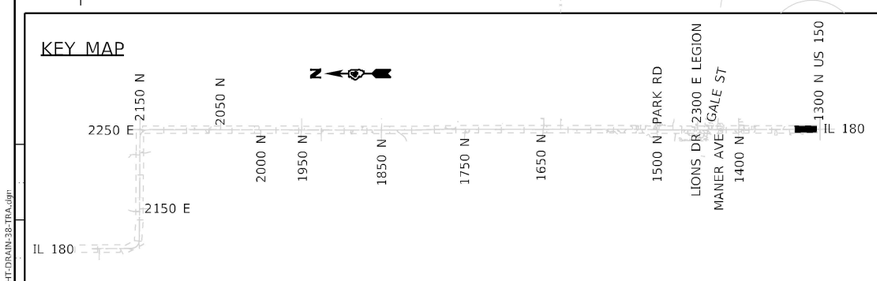

SHEET	PIPE ID	CLASS/TYPE	DIA, INCH	LENGTH, FT	U/S STRUCTURE	U/S STA.	U/S OFF	U/S INVERT	D/S STRUCTURE	D/S STA.	D/S OFF	D/S INVERT	SLOPE	TBF, CU YD
38	P51	P CUL CL D 1	15	38.5	METAL FL END SEC 15	62+29.00	29.59 RT	(705.55)	METAL FL END SEC 15	61+79.46	27.43 RT	(704.95)	1.2%	2.2

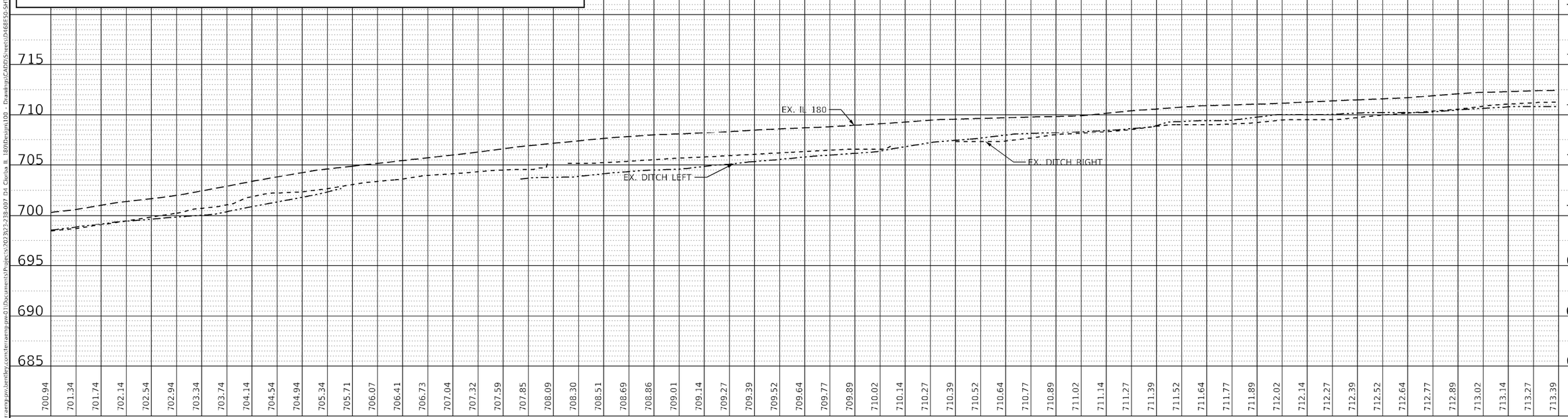

PLAN	DATE	BY
SURVEYED		
PLOTTED		
ALIGNMENT CHECKED		
RT. OF WAY CHECKED		
CADD FILE NAME		
NOTE BOOK NO.		

PROFILE	DATE	BY
SURVEYED		
PLOTTED		
GRADES CHECKED		
B.M. NOTED		
STRUCTURE NOTATNS CHKD		
NOTE BOOK NO.		

MODEL: Default
FILE NAME: pw:\\ter-eng-pw.bentley.com:ter-eng-pw01\Documents\Projects\2023\23-238-007 D4 Clorba IL 180\Design\100 - Drawings\CADD\Sheets\D468E50-SHT-DRAIN-38-TRA.dgn

TERRA ENGINEERING LTD.	USER NAME = TravisW	DESIGNED - TW	REVISED -
		DRAWN - TW/BAJ	REVISED -
	PLOT SCALE = 100.0002 ' / in.	CHECKED - CL	REVISED -
	PLOT DATE = 12/18/2024	DATE - 2024/03/18	REVISED -

STATE OF ILLINOIS
DEPARTMENT OF TRANSPORTATION

DRAINAGE PLAN & PROFILES
IL 180

SCALE: SHEET 38 OF 42 SHEETS STA. TO STA.

F.A.S. RTE.	SECTION	COUNTY	TOTAL SHEETS	SHEET NO.
1195	*	KNOX	409	209

CONTRACT NO. 68E50

ILLINOIS | FED. AID PROJECT

*110RS-5:(111,112,108X-1)W,RS-3

SHEET	PIPE ID	CLASS/TYPE	DIA, INCH	LENGTH, FT	U/S STRUCTURE	U/S STA.	U/S OFF	U/S INVERT	D/S STRUCTURE	D/S STA.	D/S OFF	D/S INVERT	SLOPE	TBF, CU YD
39	P52	P CUL CL A 1	24	54.0	PRC FLAR END SEC 24	640+62.45	34.63 LT	782.77	PRC FLAR END SEC 24	640+60.36	31.59 RT	781.78	1.5%	8.6

LEGEND

STONE RIPRAP & FILTER FABRIC (CLASS A4 UNLESS OTHERWISE NOTED)

(XXX.XX) EXISTING ELEVATION

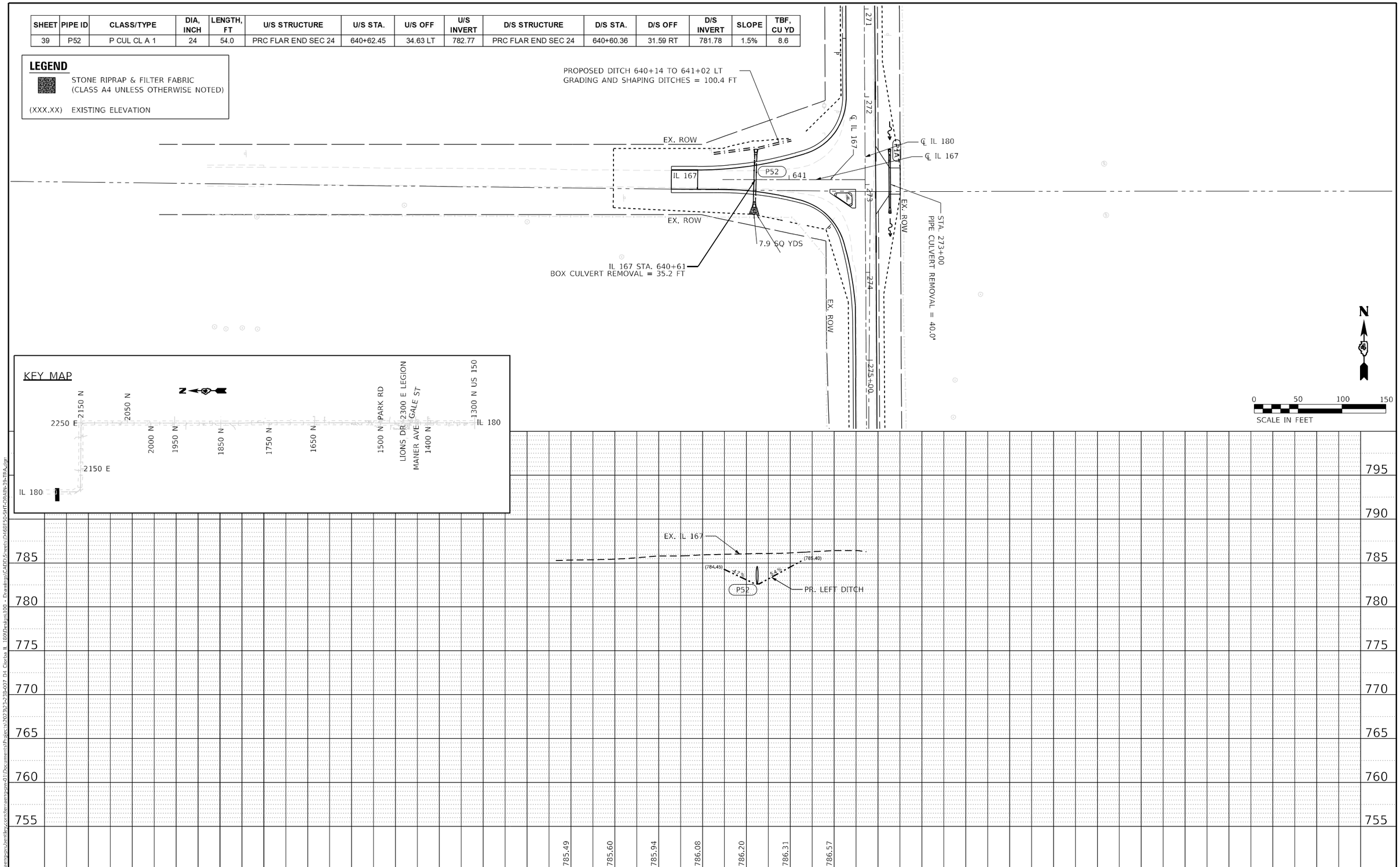

PLAN
NOTE BOOK NO.
SURVEYED
PLOTTED
ALIGNMENT CHECKED
R/ OF WAY CHECKED
CADD FILE NAME
BY
DATE

PROFILE
NOTE BOOK NO.
SURVEYED
PLOTTED
GRADES CHECKED
B.M. NOTED
STRUCTURE NOTATIONS CHKD
BY
DATE

MODEL: Default
FILE NAME: pw:\\ter:aenpw01\Documents\Projects\2023\23-238-007 D4 Clorba IL 180\Design\100 - Drawings\CADD\Sheets\D468E50-SHT-DRAIN-39-TRA.dgn

TERRA ENGINEERING LTD.

USER NAME = TravisW	DESIGNED - TW	REVISED -	
	DRAWN - TW/BAJ	REVISED -	
PLOT SCALE = 100.0002 ' / in.	CHECKED - CL	REVISED -	
PLOT DATE = 12/18/2024	DATE - 2024/03/18	REVISED -	

STATE OF ILLINOIS
DEPARTMENT OF TRANSPORTATION

DRAINAGE PLAN & PROFILES
IL 180/IL 167

SCALE: SHEET 39 OF 42 SHEETS STA. TO STA.

F.A.S. RTE.	SECTION	COUNTY	TOTAL SHEETS	SHEET NO.
1195	*	KNOX	409	210

CONTRACT NO. 68E50

ILLINOIS FED. AID PROJECT

*110RS-5:(111,112,108X-1)W,RS-3

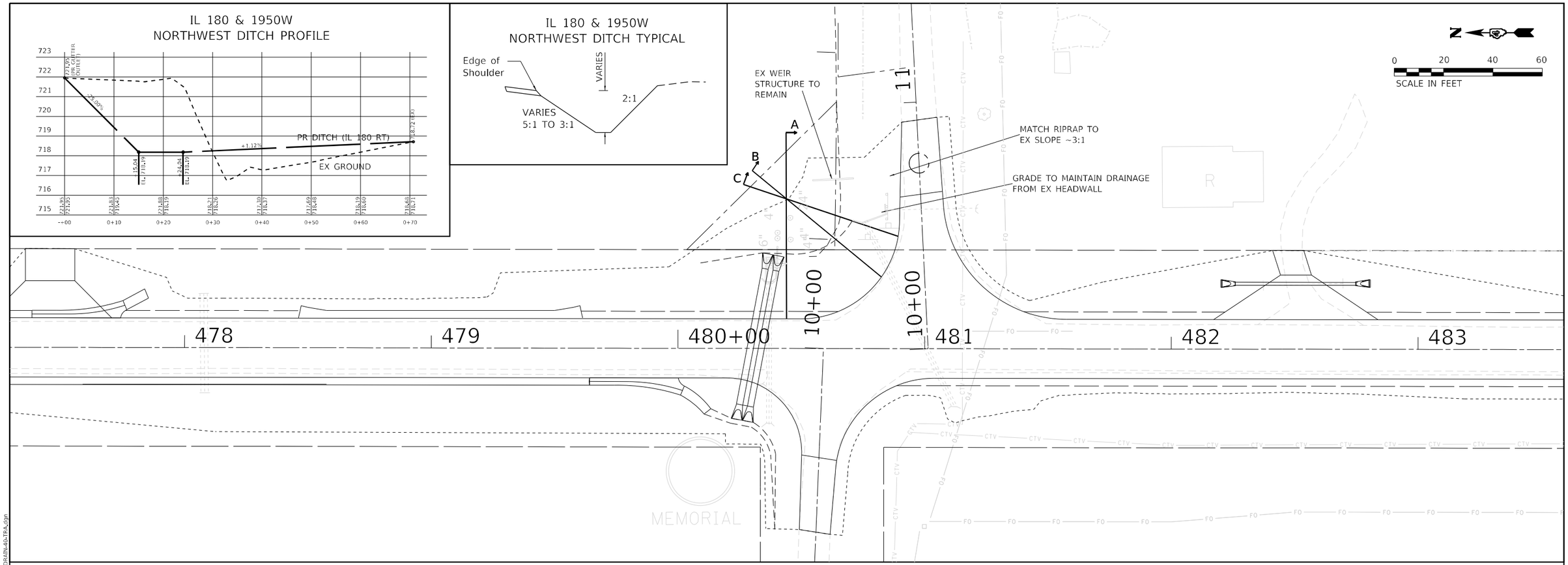

SECTION A

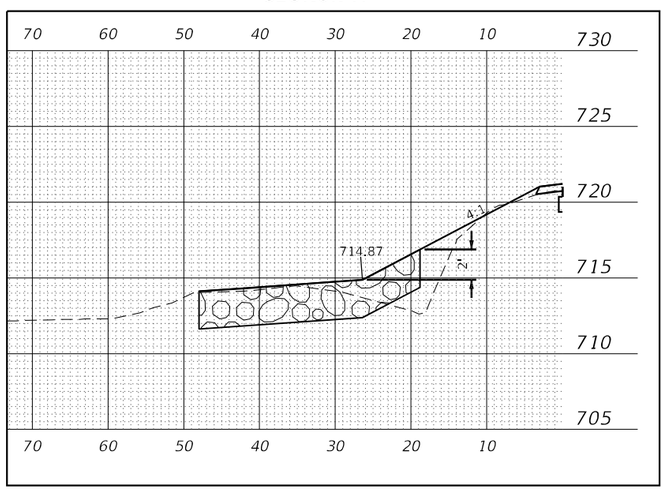

SECTION B

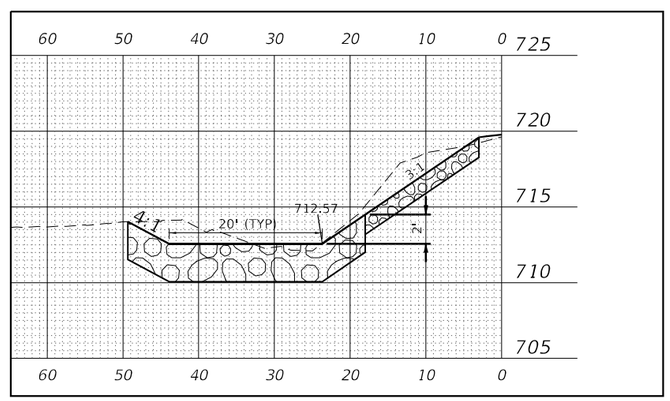

SECTION C

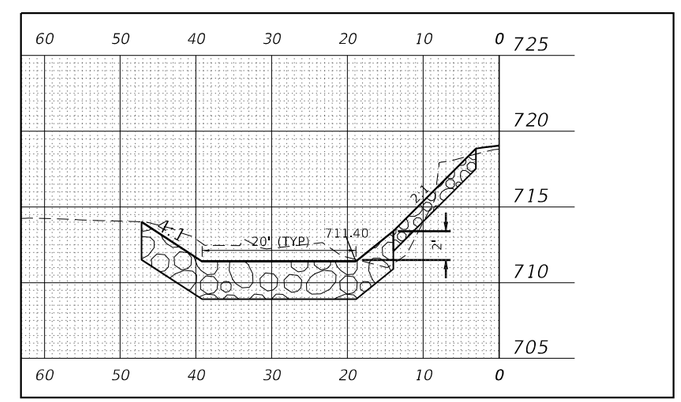

MODEL: Default
FILE NAME: pw:\\terraeng-pw.bentley.com:terraeng-pw-01\Documents\Projects\2023\23-238-007 D4 Clarks IL 180\Design\100 - Drawings\CADD\Sheets\D468E50-SHT-DRAIN-40-TRA.dgn

TERRA ENGINEERING LTD.	USER NAME = TravisW	DESIGNED - TW	REVISED -
		DRAWN - TW/BAJ	REVISED -
	PLOT SCALE = 40.0001 ' / in.	CHECKED - CL	REVISED -
	PLOT DATE = 12/18/2024	DATE - 2024/03/18	REVISED -

STATE OF ILLINOIS
DEPARTMENT OF TRANSPORTATION

DRAINAGE GRADING DETAIL
IL 180/KNOX 1950 N

SCALE: | SHEET 40 OF 42 SHEETS | STA. | TO STA.

F.A.S. RTE.	SECTION	COUNTY	TOTAL SHEETS	SHEET NO.
1195	*	KNOX	409	211
		CONTRACT NO. 68E50		
		ILLINOIS	FED. AID PROJECT	

*110RS-5;(111,112,108X-1)W,RS-3

STRUCTURE NO. 1
STA. 282 + 10 LT

PLAN

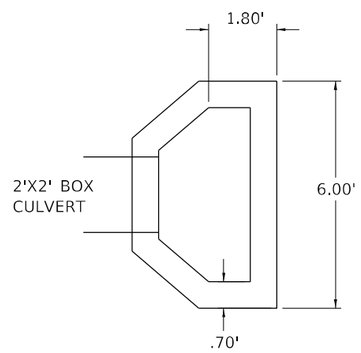

DEPTH NOT RECORDED

STRUCTURE NO. 2
STA. 294 + 45 LT

PLAN

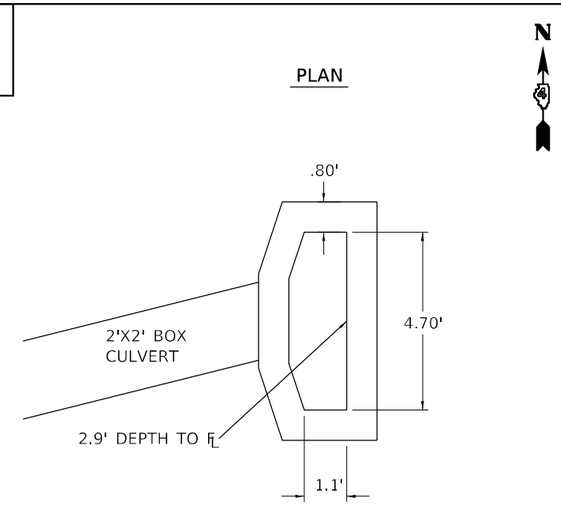

STRUCTURE NO. 3
STA. 298 + 12 LT

PLAN

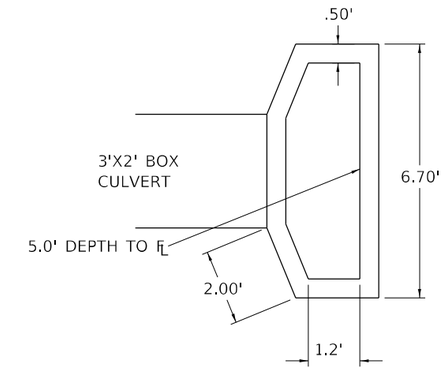

STRUCTURE NO. 4
STA. 480 + 36 LT

PLAN

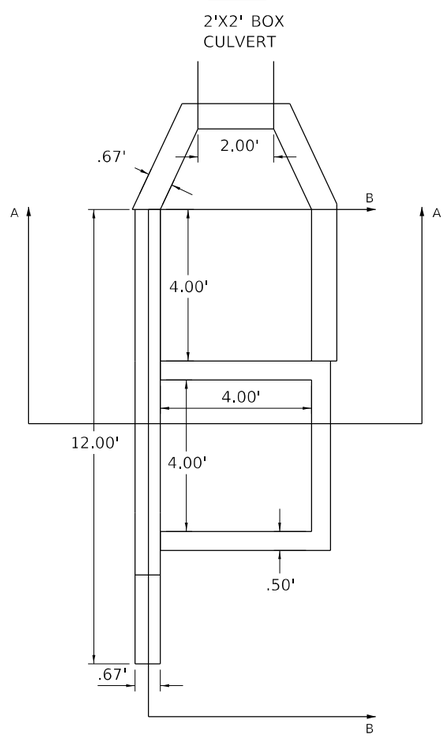

SECTION A-A

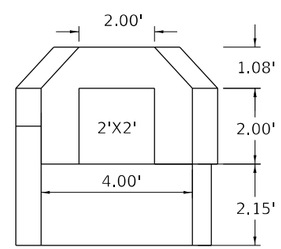

SECTION B-B

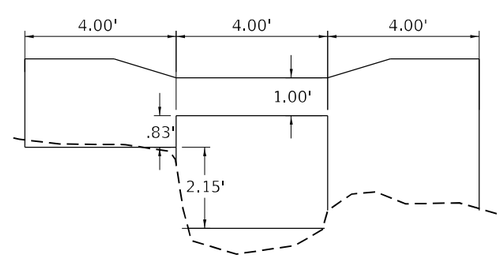

STRUCTURE NO. 5
STA. 703 + 92 LT

PLAN

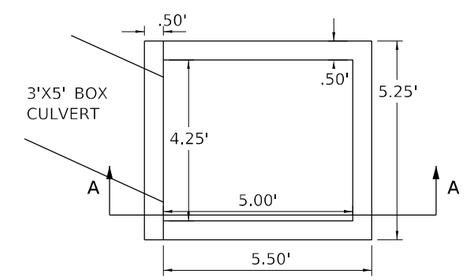

SECTION A-A

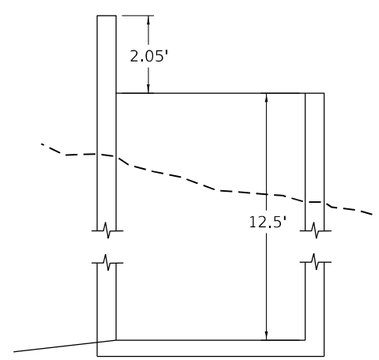

FOR INFORMATIONAL PURPOSES ONLY

SHEET NOT TO SCALE

MODEL: Default
FILE NAME: pw:\\terraeng-pw-01\Documents\Projects\2023\23-2-38-007 D4 Clinton IL 180\Design\100 - Drawings\CADD-Sheets\D468E50-SHT-DRAIN41-TRA.dgn

TERRA ENGINEERING LTD.	USER NAME = TravisW	DESIGNED - TW	REVISED -	STATE OF ILLINOIS DEPARTMENT OF TRANSPORTATION	EXISTING STRUCTURES TO BE REMOVED FIELD MEASUREMENTS
		DRAWN - TW	REVISED -		
	PLOT SCALE = 100.0002 ' / in.	CHECKED - CL	REVISED -		
	PLOT DATE = 12/18/2024	DATE - 2024/03/18	REVISED -		SCALE: SHEET 41 OF 42 SHEETS STA. TO STA.

F.A.S. RTE.	SECTION	COUNTY	TOTAL SHEETS	SHEET NO.
1195	*	KNOX	409	212
		CONTRACT NO. 68E50		
		ILLINOIS FED. AID PROJECT		

*110RS-5;(111,112,108X-1)W,RS-3

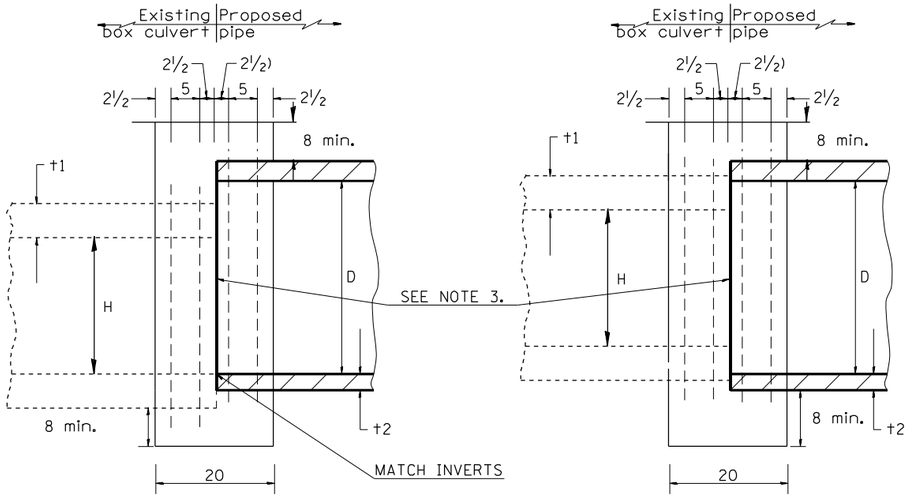

SECTION A - A
UPSTREAM

SECTION A - A
DOWNSTREAM

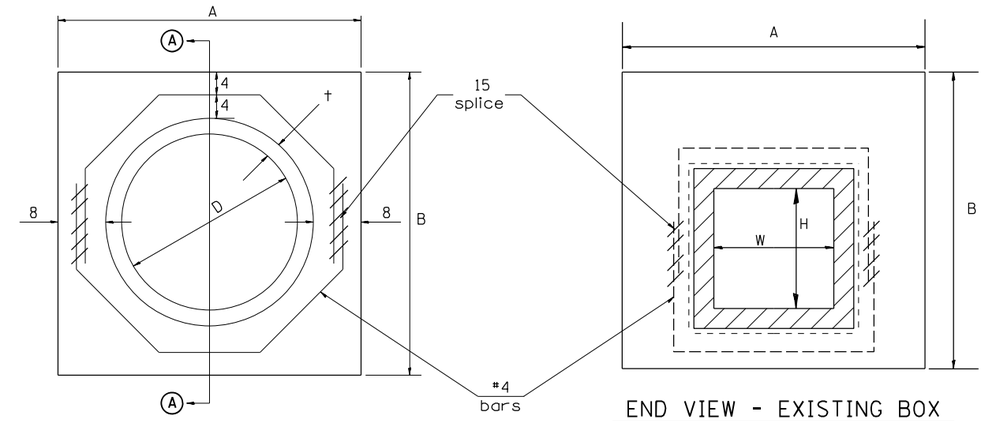

END VIEW - PROPOSED PIPE

END VIEW - EXISTING BOX
UPSTREAM

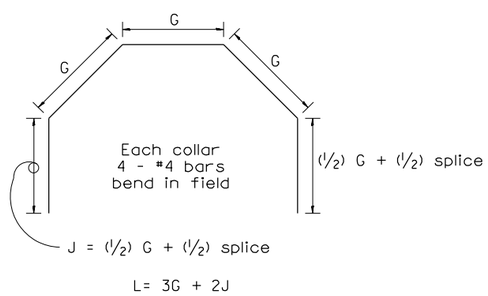

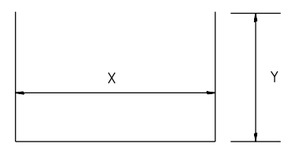

#4 U BAR
FOUR REQUIRED
PER COLLAR

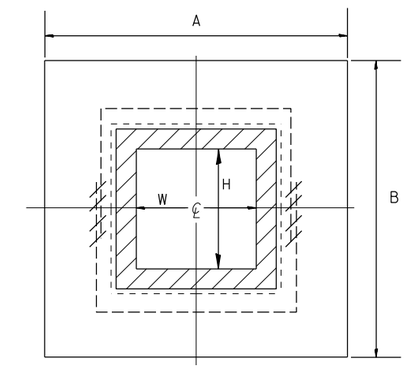

END VIEW - EXISTING BOX
DOWNSTREAM

EXIST. BOX			PROP. PIPE		EACH COLLAR								LBS. (kg)
					CLASS SI CONCRETE			REBARS					
W	H	t1	D	t2	CU. YD.	A	B	G	J	L	X	Y	
24	24	4	30	3.5	0.8	4'-6"	4'-6"	18 11/16	16 3/4	7.48'	3'-4"	27.5	41

QUANTITY CALCULATIONS ON PROJECT FILE

GENERAL NOTES

1. THE COLLAR SHALL BE CONSTRUCTED ENTIRELY OF CLASS SI CONCRETE IN ACCORDANCE WITH THE APPLICABLE PORTIONS OF SECTION 503 OF THE STANDARD SPECIFICATIONS. REINFORCEMENT BARS SHALL CONFORM TO SECTION 508.

2. THIS WORK SHALL BE PAID FOR BY THE CUBIC YARD FOR CONCRETE COLLAR AND BY THE POUND FOR REINFORCEMENT BARS.

3. PIPE COLLAR SHALL BE WATERTIGHT. MASTIC JOINT SEALER SHALL BE APPLIED TO THE ABUTTING PIPE ENDS. ALL REMAINING VOIDS SHALL BE FILLED AND SEALED WITH MORTAR AND MASTIC JOINT SEALER.

All dimensions are in inches unless otherwise noted.

MODEL: Default
FILE NAME: pw:\\terraeng-pw.bentley.com:terraengpw-01\Documents\Projects\2023\23-238-007 D4 Clarks IL 180\Design\100 - Drawings\CADD\Sheets\0468E50-SHT-DRAIN-42-TRA.dgn

TERRA ENGINEERING LTD.	USER NAME = TravisW	DESIGNED - TW	REVISED -	STATE OF ILLINOIS DEPARTMENT OF TRANSPORTATION	PIPE COLLAR DETAIL IL 180	F.A.S. RTE.	SECTION	COUNTY	TOTAL SHEETS	SHEET NO.
		DRAWN - TW	REVISED -			1195	*	KNOX	409	213
	PLOT SCALE = 100.0002 ' / in.	CHECKED - CL	REVISED -					CONTRACT NO. 68E50		
	PLOT DATE = 12/18/2024	DATE - 2024/03/18	REVISED -		SCALE: SHEET 42 OF 42 SHEETS STA. TO STA.		ILLINOIS	FED. AID PROJECT		

*110RS-5;(111,112,108X-1)W,RS-3

EXISTING PIPE UNDERDRAINS TO BE ADJUSTED AT THE FOLLOWING STATION RANGE:
STA. 654+00 TO 657+00 - RT. & LT.

EXISTING
PLAN VIEW

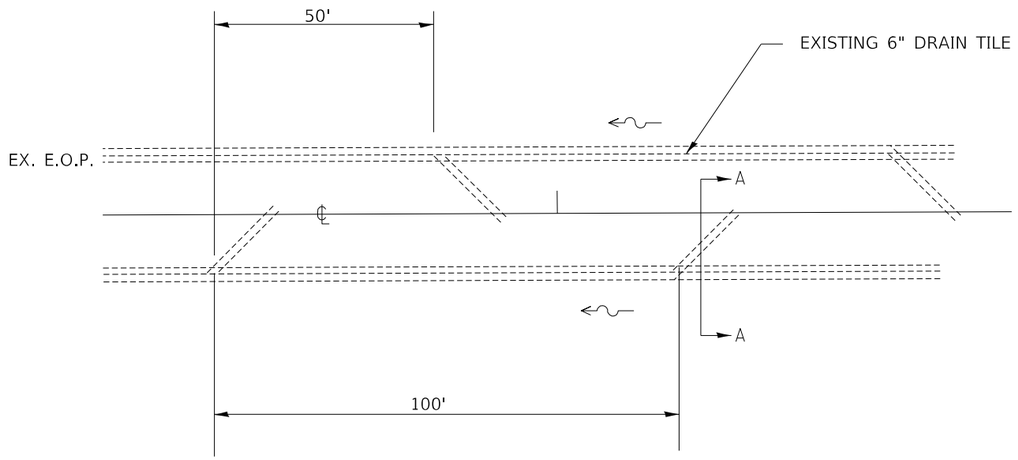

EXISTING
SECTION A-A

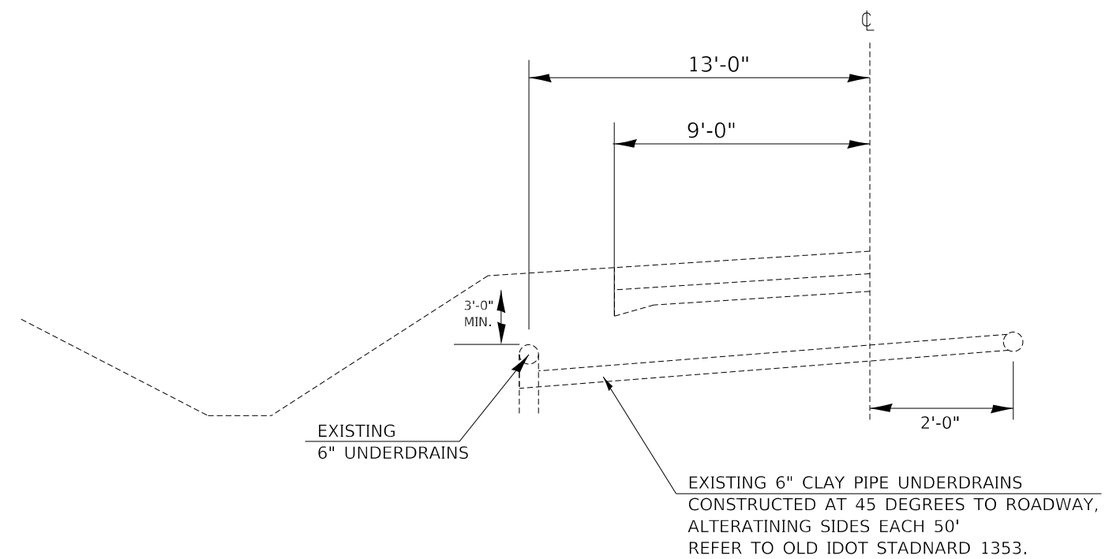

PROPOSED
PLAN VIEW

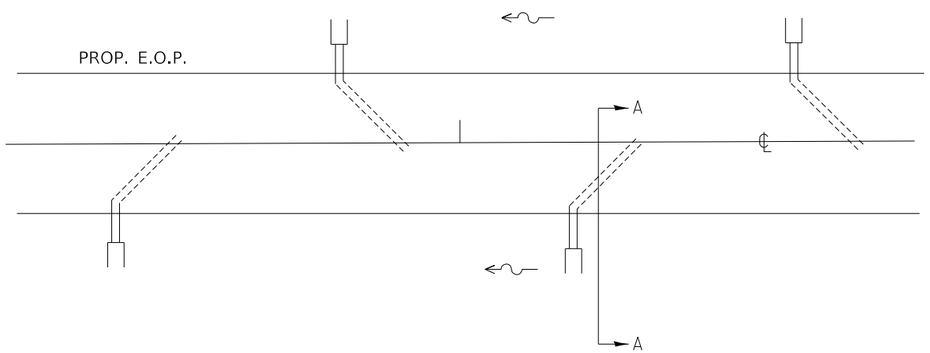

PROPOSED
SECTION A-A

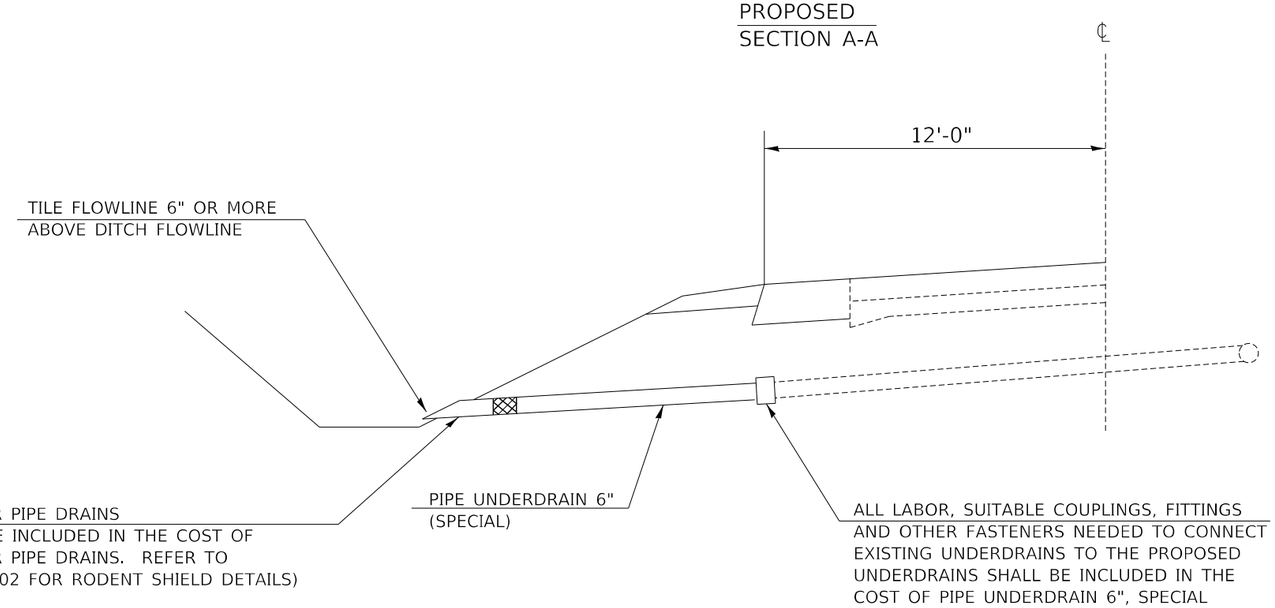

MODEL: Default
FILE NAME: pw:\\terraeng-pw.bentley.com:terraeng-pw-31\Documents\Projects\2023\23-238-007 D4 Clutha IL 180\Design100 - Drawings\CADD\Sheets\D468E50-SHT-DRAIN-43-TRA.dgn

TERRA ENGINEERING LTD.	USER NAME = TravisW	DESIGNED -	REVISED -	STATE OF ILLINOIS DEPARTMENT OF TRANSPORTATION	PIPE UNDERDRAIN, 6' SPECIAL IL 180	F.A.S. RTE.	SECTION	COUNTY	TOTAL SHEETS / SHEET NO.
		DRAWN -	REVISED -			1195	*	KNOX	409 / 214
	PLOT SCALE = 50.0001 ' / in.	CHECKED -	REVISED -					CONTRACT NO. 68E50	
	PLOT DATE = 12/18/2024	DATE - 2024/03/18	REVISED -		SCALE: SHEET OF SHEETS STA. TO STA.		ILLINOIS	FED. AID PROJECT	

*110RS-5;(111,112,108X-1)W,RS-3

FOR INFORMATION ONLY.

EXISTING PIPE UNDERDRAINS TO BE ADJUSTED AT THE FOLLOWING STATION RANGE:
STA. 654+00 TO 657+00 - RT. & LT.

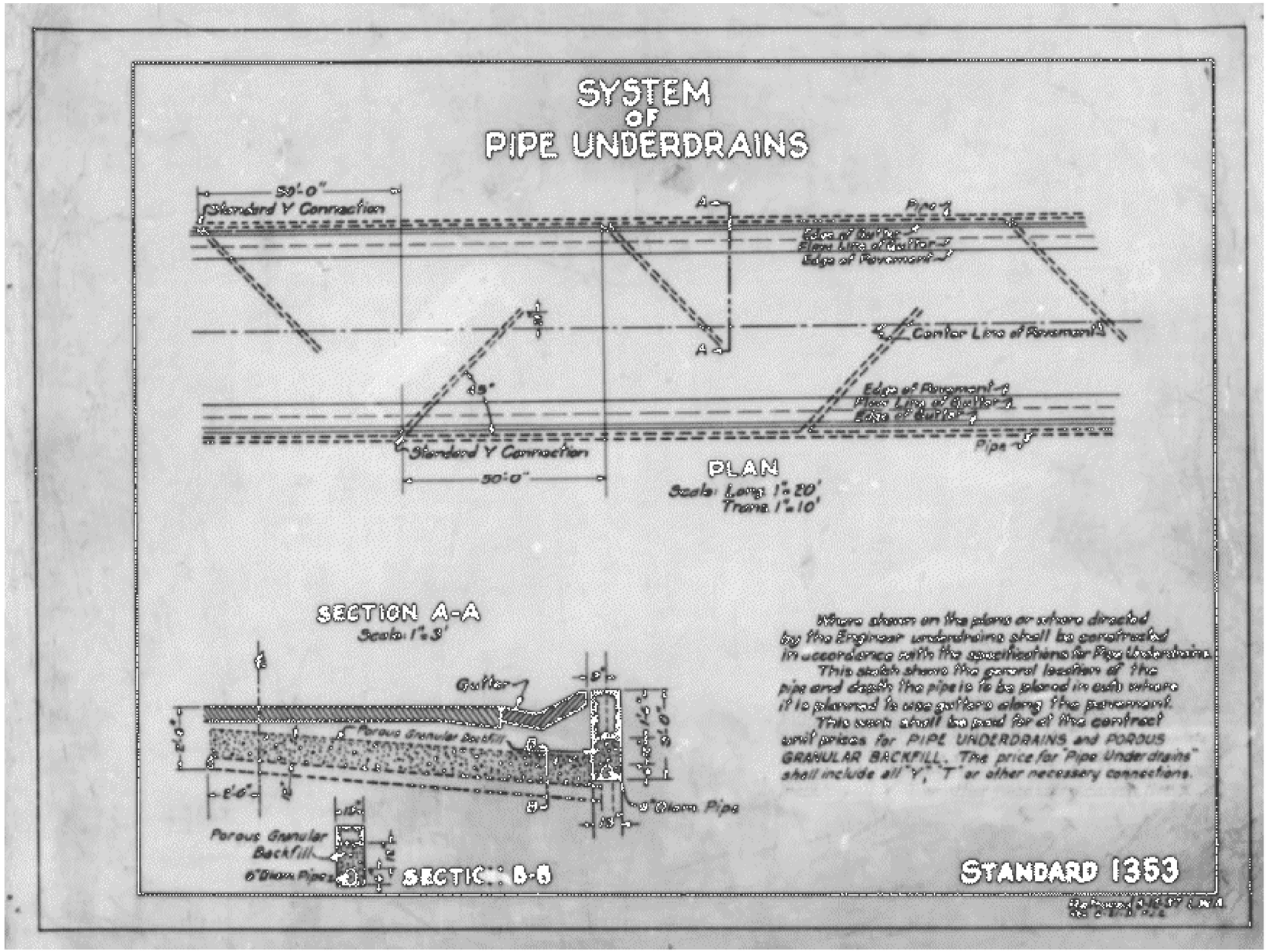

MODEL: Default
FILE NAME: pw:\\terraengpw.bentley.com:terraengpw01\Documents\Projects\2023\23-238-007 D4 Clarks IL 180\Design\100 - Drawings\CADD\Sheets\D468E50-SHT-DRAIN-44-TRA.dgn

TERRA ENGINEERING LTD.	USER NAME = TravisW	DESIGNED -	REVISED -	STATE OF ILLINOIS DEPARTMENT OF TRANSPORTATION	PIPE UNDERDRAIN, STD. 1353 IL 180	F.A.S. RTE.	SECTION	COUNTY	TOTAL SHEETS / SHEET NO.
		DRAWN -	REVISED -			1195	*	KNOX	409 / 215
	PLOT SCALE = 100.0002 ' / in.	CHECKED -	REVISED -					CONTRACT NO. 68E50	
	PLOT DATE = 12/18/2024	DATE - 2024/03/18	REVISED -		SCALE: SHEET OF SHEETS STA. TO STA.		ILLINOIS	FED. AID PROJECT	

*110RS-5;(111,112,108X-1)W,RS-3

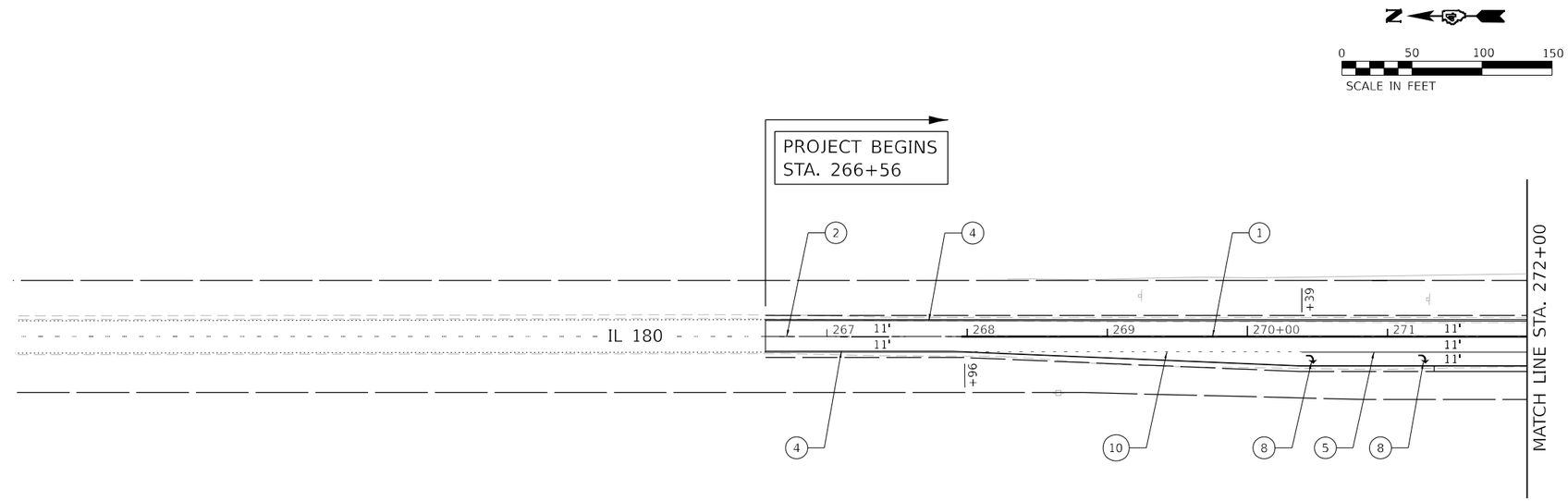

LEGEND

1. MODIFIED URETHANE PAVT MK LINE 4", DOUBLE SOLID YELLOW CENTERLINE
2. MODIFIED URETHANE PAVT MK LINE 4", SKIP DASH YELLOW LINE, 10' DASH - 30' SKIP
3. MODIFIED URETHANE PAVT MK LINE 4", ONE SOLID, ONE SKIP DASH YELLOW LINES @ 5 ½" C-C, 10' DASH - 30' SKIP
4. MODIFIED URETHANE PAVT MK LINE 6", SOLID WHITE LINE
5. MODIFIED URETHANE PAVT MK LINE 8", SOLID WHITE LINE
6. MODIFIED URETHANE PAVT MK LINE 12", SOLID WHITE LINE / DIAGONAL, 45° @ 10' MAX SPACING
7. MODIFIED URETHANE PAVT MK LINE 24", SOLID WHITE STOP BAR
8. MODIFIED URETHANE PAVT MK, LETTERS AND SYMBOLS
9. TWO-LANE RAISED REFLECTIVE PAVEMENT MARKER (STANDARD 781001-04)
10. MODIFIED URETHANE PAVT MK LINE 8", SKIP DASH WHITE LINE, 2' DASH - 6' SKIP

NOTES:

1. ALL FINAL PAVEMENT MARKINGS SHALL BE MODIFIED URETHANE PAVEMENT MARKINGS ON HMA.
2. ALL FINAL PAVEMENT MARKINGS SHALL BE PLACED IN ACCORDANCE WITH 780001-D4 "DISTRICT FOUR TYPICAL PAVEMENT MARKINGS" STANDARD DETAIL.

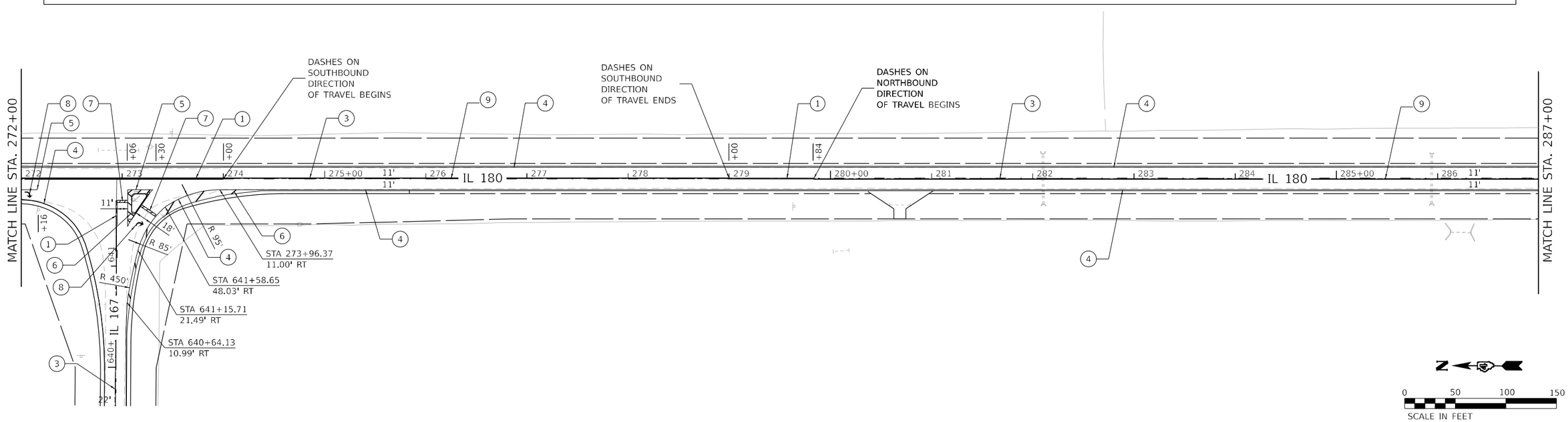

OSEH inc. 401 S CARLTON AVE SUITE 200 WHEATON, IL 60187 WWW.OSEHINC.COM	USER NAME = AlexDefrancesco	DESIGNED -	REVISED -	STATE OF ILLINOIS DEPARTMENT OF TRANSPORTATION	PROPOSED PAVEMENT MARKING PLAN	F.A.S RTE.	SECTION	COUNTY	TOTAL SHEETS	SHEET NO.
		DRAWN -	REVISED -			1195	110RS-5:(111,112,108X-1)W,RS-3	KNOX	409	216
	PLOT SCALE = 100.0000 ' / in.	CHECKED -	REVISED -					CONTRACT NO. 68E50		
	PLOT DATE = 12/18/2024	DATE -	REVISED -		SCALE: 1" = 50' SHEET 1 OF 20 SHEETS STA. TO STA.		ILLINOIS FED. AID PROJECT			

MODEL: SMODELNAMES
FILE NAME: Z:\Shared\Projects\IDOT\P-94-007-22 - Cicero\03 Design\02 CADD Sheets\Work Order 7\D468E50-PMK01.dgn

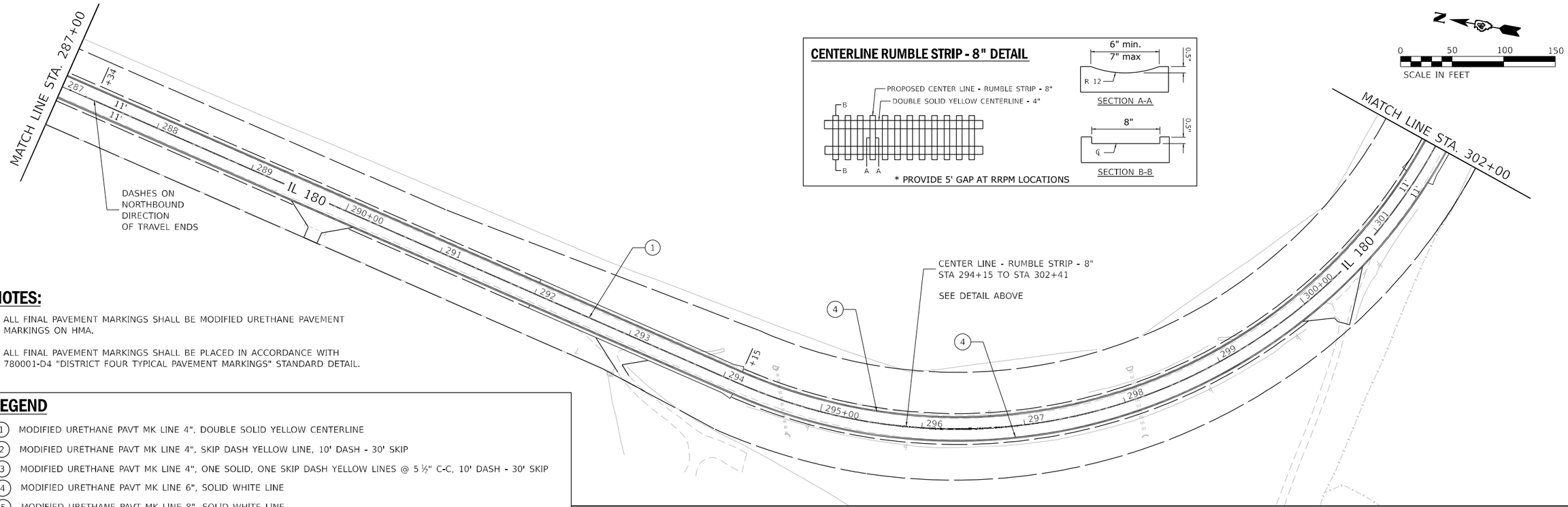

NOTES:

1. ALL FINAL PAVEMENT MARKINGS SHALL BE MODIFIED URETHANE PAVEMENT MARKINGS ON HMA.
2. ALL FINAL PAVEMENT MARKINGS SHALL BE PLACED IN ACCORDANCE WITH 780001-D4 "DISTRICT FOUR TYPICAL PAVEMENT MARKINGS" STANDARD DETAIL.

LEGEND

1. MODIFIED URETHANE PAVT MK LINE 4", DOUBLE SOLID YELLOW CENTERLINE
2. MODIFIED URETHANE PAVT MK LINE 4", SKIP DASH YELLOW LINE, 10' DASH - 30' SKIP
3. MODIFIED URETHANE PAVT MK LINE 4", ONE SOLID, ONE SKIP DASH YELLOW LINES @ 5 ½" C-C, 10' DASH - 30' SKIP
4. MODIFIED URETHANE PAVT MK LINE 6", SOLID WHITE LINE
5. MODIFIED URETHANE PAVT MK LINE 8", SOLID WHITE LINE
6. MODIFIED URETHANE PAVT MK LINE 12", SOLID WHITE LINE / DIAGONAL, 45° @ 10' MAX. SPACING
7. MODIFIED URETHANE PAVT MK LINE 24", SOLID WHITE STOP BAR
8. MODIFIED URETHANE PAVT MK, LETTERS AND SYMBOLS
9. TWO-LANE RAISED REFLECTIVE PAVEMENT MARKER (STANDARD 781001-04)
10. MODIFIED URETHANE PAVT MK LINE 8", SKIP DASH WHITE LINE, 2' DASH - 6' SKIP

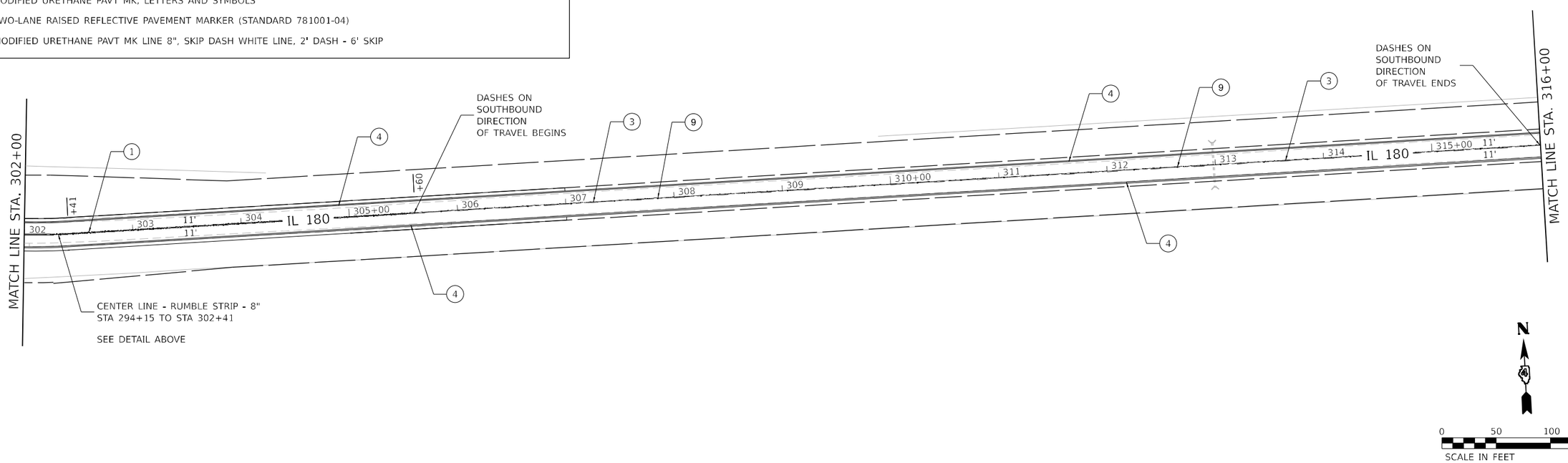

MODEL: $MODEL$NAME5
FILE NAME: P:\Shared\Projects\IDOT\P-94-007-22 - Clerks\03 Design\02 CADD Sheets\Work Order 7\D468E50-PM002.dgn

OSEH inc. 401 S CARLTON AVE SUITE 200 WHEATON, IL 60187 WWW.OSEHINC.COM	USER NAME = AlexDefrancesco	DESIGNED -	REVISED -	STATE OF ILLINOIS DEPARTMENT OF TRANSPORTATION	PROPOSED PAVEMENT MARKING PLAN
		DRAWN -	REVISED -		
	PLOT SCALE = 100.0000 ' / in.	CHECKED -	REVISED -		
	PLOT DATE = 12/18/2024	DATE -	REVISED -		SCALE: 1" = 50' SHEET 2 OF 20 SHEETS STA. TO STA.

F.A.S RTE.	SECTION	COUNTY	TOTAL SHEETS	SHEET NO.
1195	110RS-5:(111,112,108X-1)W,RS-3	KNOX	409	217
		CONTRACT NO. 68E50		
		ILLINOIS	FED. AID PROJECT	

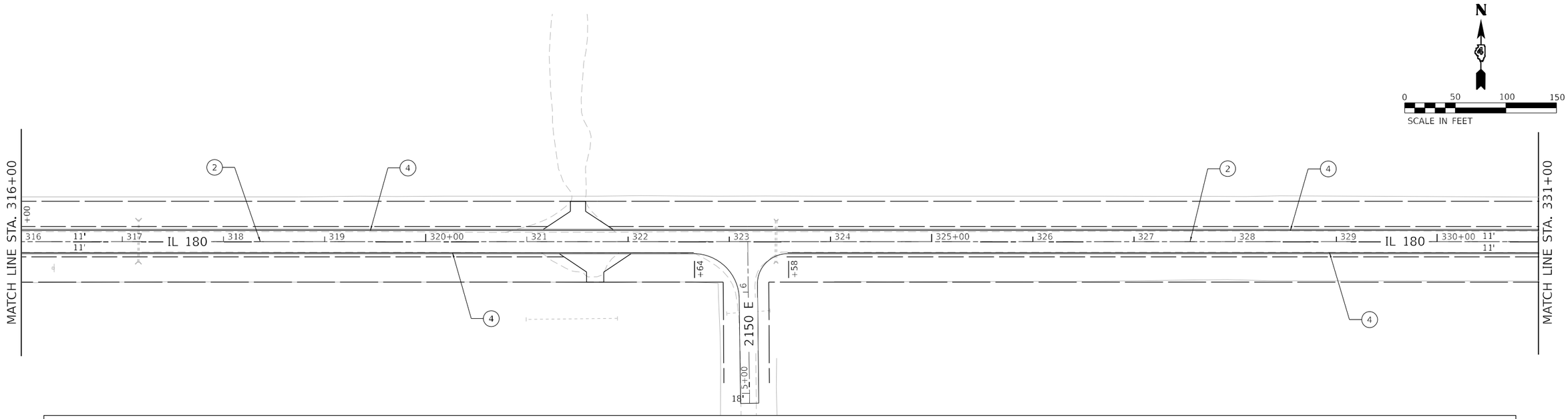

LEGEND

1. MODIFIED URETHANE PAVT MK LINE 4", DOUBLE SOLID YELLOW CENTERLINE
2. MODIFIED URETHANE PAVT MK LINE 4", SKIP DASH YELLOW LINE, 10' DASH - 30' SKIP
3. MODIFIED URETHANE PAVT MK LINE 4", ONE SOLID, ONE SKIP DASH YELLOW LINES @ 5 ½" C-C, 10' DASH - 30' SKIP
4. MODIFIED URETHANE PAVT MK LINE 6", SOLID WHITE LINE
5. MODIFIED URETHANE PAVT MK LINE 8", SOLID WHITE LINE
6. MODIFIED URETHANE PAVT MK LINE 12", SOLID WHITE LINE / DIAGONAL, 45° @ 10' MAX SPACING
7. MODIFIED URETHANE PAVT MK LINE 24", SOLID WHITE STOP BAR
8. MODIFIED URETHANE PAVT MK, LETTERS AND SYMBOLS
9. TWO-LANE RAISED REFLECTIVE PAVEMENT MARKER (STANDARD 781001-04)
10. MODIFIED URETHANE PAVT MK LINE 8", SKIP DASH WHITE LINE, 2' DASH - 6' SKIP

NOTES:

1. ALL FINAL PAVEMENT MARKINGS SHALL BE MODIFIED URETHANE PAVEMENT MARKINGS ON HMA.
2. ALL FINAL PAVEMENT MARKINGS SHALL BE PLACED IN ACCORDANCE WITH 780001-D4 "DISTRICT FOUR TYPICAL PAVEMENT MARKINGS" STANDARD DETAIL.

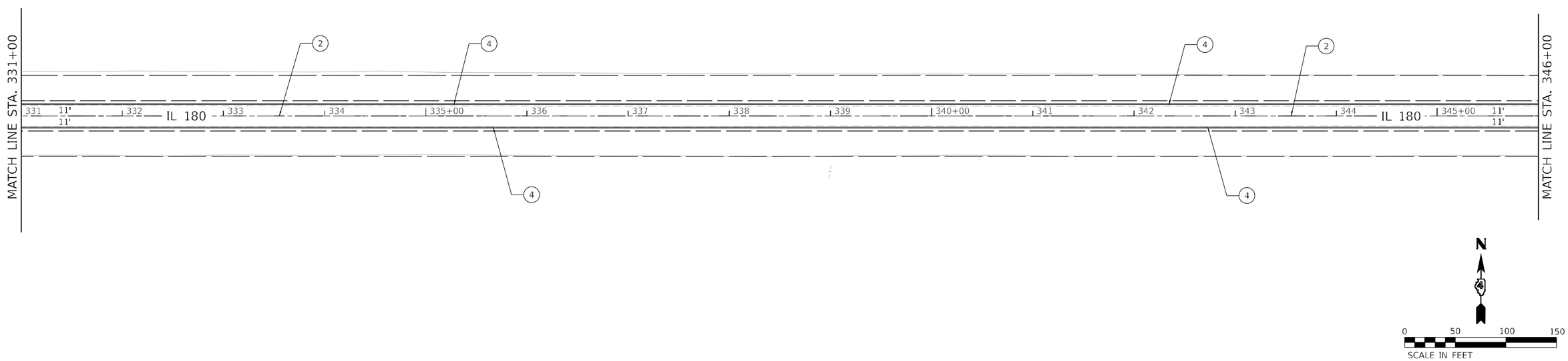

MODEL: $MODEL$NAMES
FILE NAME: P:\Shared\Projects\IDOT\P-94-007-22 - Clerks\03 Design\02 CADD Sheets\Work Order 71D468E5\PMK03.dgn

OSEH inc. 401 S CARLTON AVE SUITE 200 WHEATON, IL 60187 WWW.OSEHINC.COM	USER NAME = AlexDefrancesco	DESIGNED -	REVISED -	STATE OF ILLINOIS DEPARTMENT OF TRANSPORTATION	PROPOSED PAVEMENT MARKING PLAN	F.A.S RTE.	SECTION	COUNTY	TOTAL SHEETS / SHEET NO.
		DRAWN -	REVISED -			1195	110RS-5:(111,112,108X-1)W,RS-3	KNOX	409 / 218
	PLOT SCALE = 100.0000 ' / in.	CHECKED -	REVISED -					CONTRACT NO. 68E50	
	PLOT DATE = 12/18/2024	DATE -	REVISED -		SCALE: 1" = 50' SHEET 3 OF 20 SHEETS STA. TO STA.		ILLINOIS	FED. AID PROJECT	

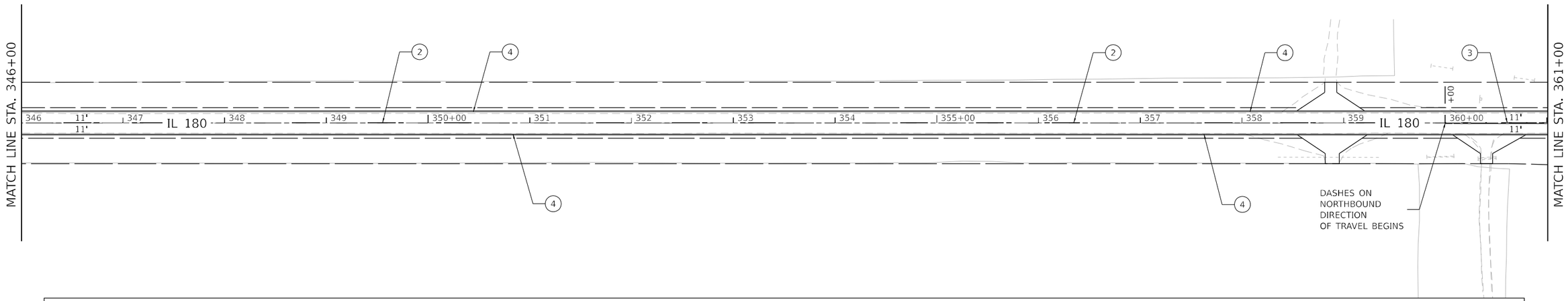

LEGEND

1. MODIFIED URETHANE PAVT MK LINE 4", DOUBLE SOLID YELLOW CENTERLINE
2. MODIFIED URETHANE PAVT MK LINE 4", SKIP DASH YELLOW LINE, 10' DASH - 30' SKIP
3. MODIFIED URETHANE PAVT MK LINE 4", ONE SOLID, ONE SKIP DASH YELLOW LINES @ 5 ½" C-C, 10' DASH - 30' SKIP
4. MODIFIED URETHANE PAVT MK LINE 6", SOLID WHITE LINE
5. MODIFIED URETHANE PAVT MK LINE 8", SOLID WHITE LINE
6. MODIFIED URETHANE PAVT MK LINE 12", SOLID WHITE LINE / DIAGONAL, 45° @ 10' MAX SPACING
7. MODIFIED URETHANE PAVT MK LINE 24", SOLID WHITE STOP BAR
8. MODIFIED URETHANE PAVT MK, LETTERS AND SYMBOLS
9. TWO-LANE RAISED REFLECTIVE PAVEMENT MARKER (STANDARD 781001-04)
10. MODIFIED URETHANE PAVT MK LINE 8", SKIP DASH WHITE LINE, 2' DASH - 6' SKIP

NOTES:

1. ALL FINAL PAVEMENT MARKINGS SHALL BE MODIFIED URETHANE PAVEMENT MARKINGS ON HMA.
2. ALL FINAL PAVEMENT MARKINGS SHALL BE PLACED IN ACCORDANCE WITH 780001-D4 "DISTRICT FOUR TYPICAL PAVEMENT MARKINGS" STANDARD DETAIL.

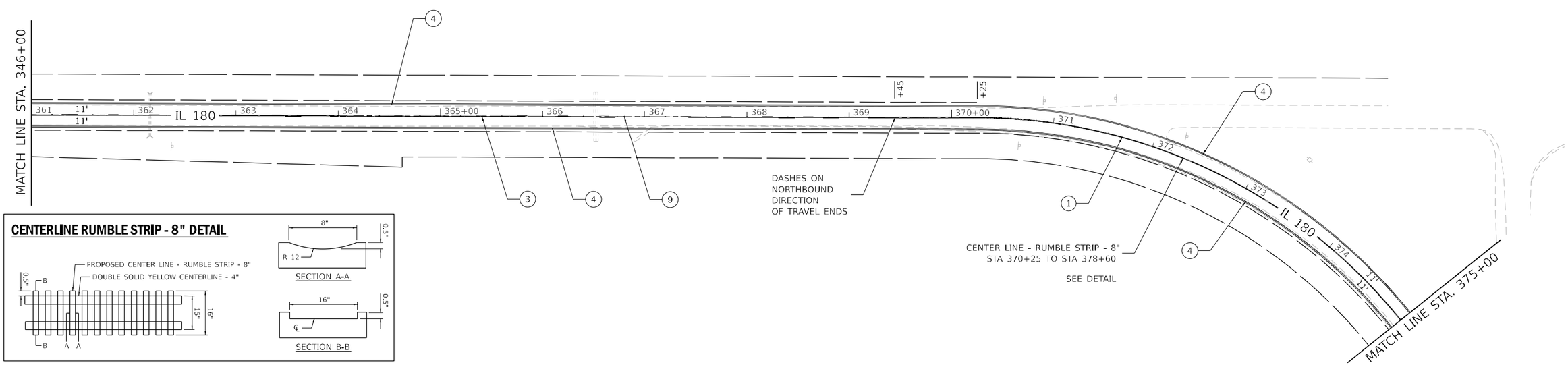

CENTERLINE RUMBLE STRIP - 8" DETAIL

OSEH inc. 401 S CARILLON AVE SUITE 200 WHEATON, IL 60187 WWW.OSEHINC.COM	USER NAME = AlexDefrancesco	DESIGNED -	REVISED -	STATE OF ILLINOIS DEPARTMENT OF TRANSPORTATION	PROPOSED PAVEMENT MARKING PLAN	F.A.S RTE.	SECTION	COUNTY	TOTAL SHEETS / SHEET NO.
		DRAWN -	REVISED -			1195	110RS-5:(111,112,108X-1)W,RS-3	KNOX	409 / 219
	PLOT SCALE = 100.0000 ' / in.	CHECKED -	REVISED -					CONTRACT NO. 68E50	
	PLOT DATE = 12/18/2024	DATE -	REVISED -		SCALE: 1" = 50' SHEET 4 OF 20 SHEETS STA. TO STA.		ILLINOIS FED. AID PROJECT		

MODEL: SMODELNAMES
FILE NAME: Z:\Shared\Projects\IDOT\P-94-007-22 - Clerks\03 Design\02 CADD Sheets\Work Order 7\D468E50-PMK04.dgn

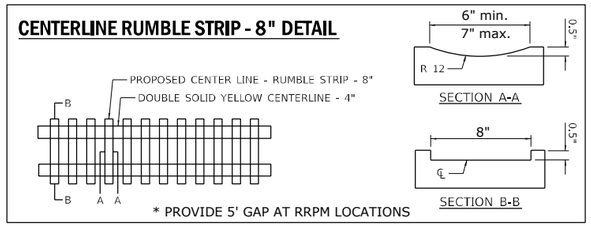

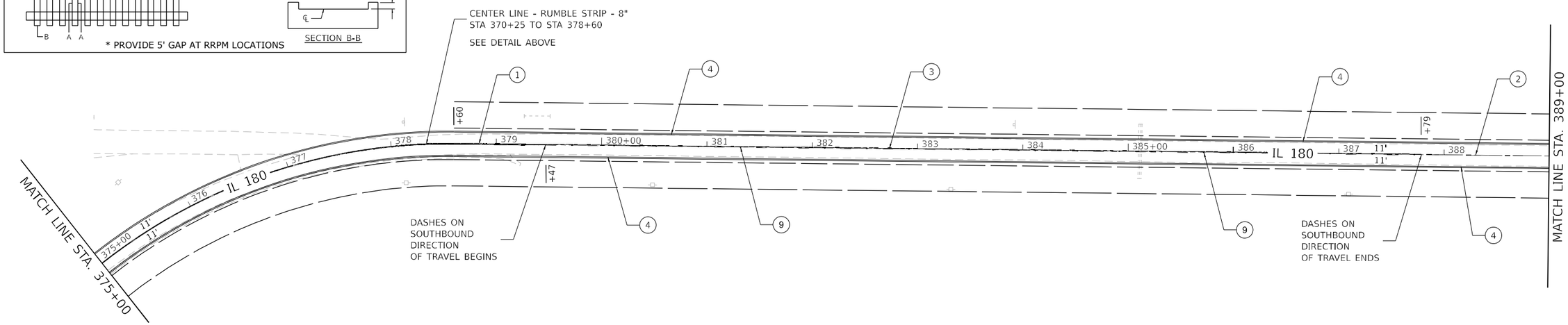

0 50 100 150
SCALE IN FEET

LEGEND

1. MODIFIED URETHANE PAVT MK LINE 4", DOUBLE SOLID YELLOW CENTERLINE
2. MODIFIED URETHANE PAVT MK LINE 4", SKIP DASH YELLOW LINE, 10' DASH - 30' SKIP
3. MODIFIED URETHANE PAVT MK LINE 4", ONE SOLID, ONE SKIP DASH YELLOW LINES @ 5 ½" C-C, 10' DASH - 30' SKIP
4. MODIFIED URETHANE PAVT MK LINE 6", SOLID WHITE LINE
5. MODIFIED URETHANE PAVT MK LINE 8", SOLID WHITE LINE
6. MODIFIED URETHANE PAVT MK LINE 12", SOLID WHITE LINE / DIAGONAL, 45° @ 10' MAX SPACING
7. MODIFIED URETHANE PAVT MK LINE 24", SOLID WHITE STOP BAR
8. MODIFIED URETHANE PAVT MK, LETTERS AND SYMBOLS
9. TWO-LANE RAISED REFLECTIVE PAVEMENT MARKER (STANDARD 781001-04)
10. MODIFIED URETHANE PAVT MK LINE 8", SKIP DASH WHITE LINE, 2' DASH - 6' SKIP

NOTES:

1. ALL FINAL PAVEMENT MARKINGS SHALL BE MODIFIED URETHANE PAVEMENT MARKINGS ON HMA.
2. ALL FINAL PAVEMENT MARKINGS SHALL BE PLACED IN ACCORDANCE WITH 780001-D4 "DISTRICT FOUR TYPICAL PAVEMENT MARKINGS" STANDARD DETAIL.

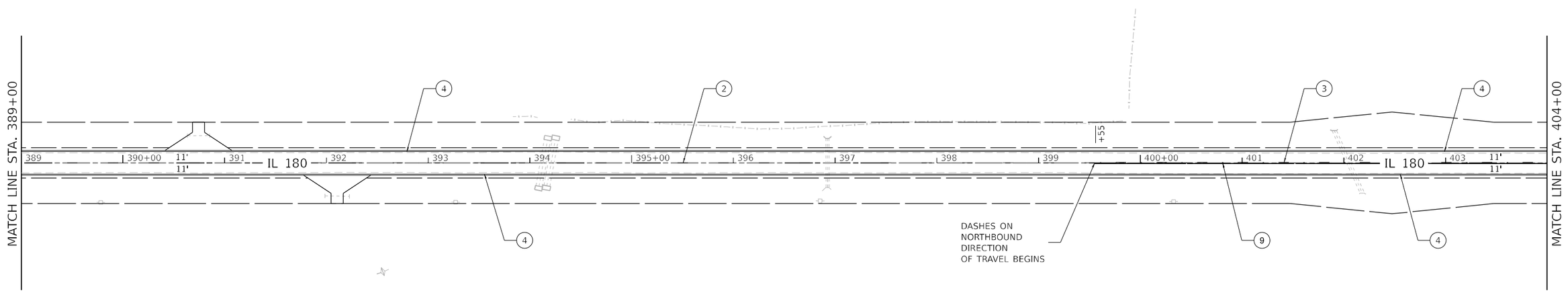

0 50 100 150
SCALE IN FEET

MODEL: SMODELNAMES
FILE NAME: P:\Shared\Projects\IDOT\P-94-007-22 - Clerks\03 Design\02 CADD Sheets\Work Order 7\D468E50-PMK05.dgn

OSEH inc. 401 S CARLTON AVE SUITE 200 WHEATON, IL 60187 WWW.OSEHINC.COM

USER NAME = AlexDefrancesco	DESIGNED -	REVISED -	
	DRAWN -	REVISED -	
PLOT SCALE = 100.0000 ' / in.	CHECKED -	REVISED -	
PLOT DATE = 12/18/2024	DATE -	REVISED -	

STATE OF ILLINOIS
DEPARTMENT OF TRANSPORTATION

PROPOSED PAVEMENT MARKING PLAN

SCALE: 1" = 50' | SHEET 5 OF 20 SHEETS | STA. TO STA.

F.A.S RTE.	SECTION	COUNTY	TOTAL SHEETS	SHEET NO.
1195	110RS-5:(111,112,108X-1)W,RS-3	KNOX	409	220
		CONTRACT NO. 68E50		
		ILLINOIS	FED. AID PROJECT	

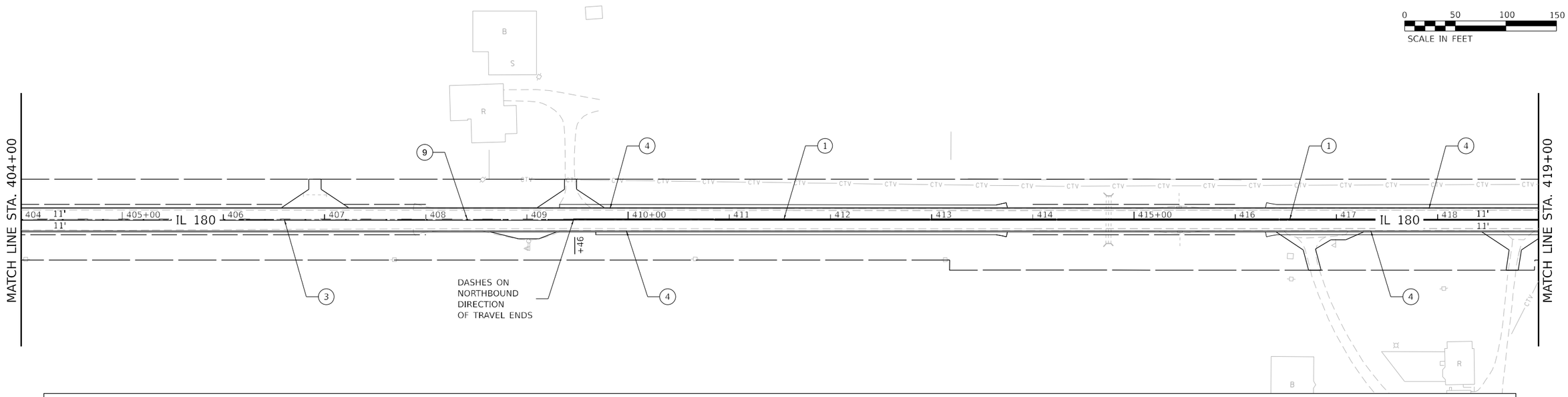

LEGEND

1. MODIFIED URETHANE PAVT MK LINE 4", DOUBLE SOLID YELLOW CENTERLINE
2. MODIFIED URETHANE PAVT MK LINE 4", SKIP DASH YELLOW LINE, 10' DASH - 30' SKIP
3. MODIFIED URETHANE PAVT MK LINE 4", ONE SOLID, ONE SKIP DASH YELLOW LINES @ 5 ½" C-C, 10' DASH - 30' SKIP
4. MODIFIED URETHANE PAVT MK LINE 6", SOLID WHITE LINE
5. MODIFIED URETHANE PAVT MK LINE 8", SOLID WHITE LINE
6. MODIFIED URETHANE PAVT MK LINE 12", SOLID WHITE LINE / DIAGONAL, 45° @ 10' MAX SPACING
7. MODIFIED URETHANE PAVT MK LINE 24", SOLID WHITE STOP BAR
8. MODIFIED URETHANE PAVT MK, LETTERS AND SYMBOLS
9. TWO-LANE RAISED REFLECTIVE PAVEMENT MARKER (STANDARD 781001-04)
10. MODIFIED URETHANE PAVT MK LINE 8", SKIP DASH WHITE LINE, 2' DASH - 6' SKIP

NOTES:

1. ALL FINAL PAVEMENT MARKINGS SHALL BE MODIFIED URETHANE PAVEMENT MARKINGS ON HMA.
2. ALL FINAL PAVEMENT MARKINGS SHALL BE PLACED IN ACCORDANCE WITH 780001-D4 "DISTRICT FOUR TYPICAL PAVEMENT MARKINGS" STANDARD DETAIL.

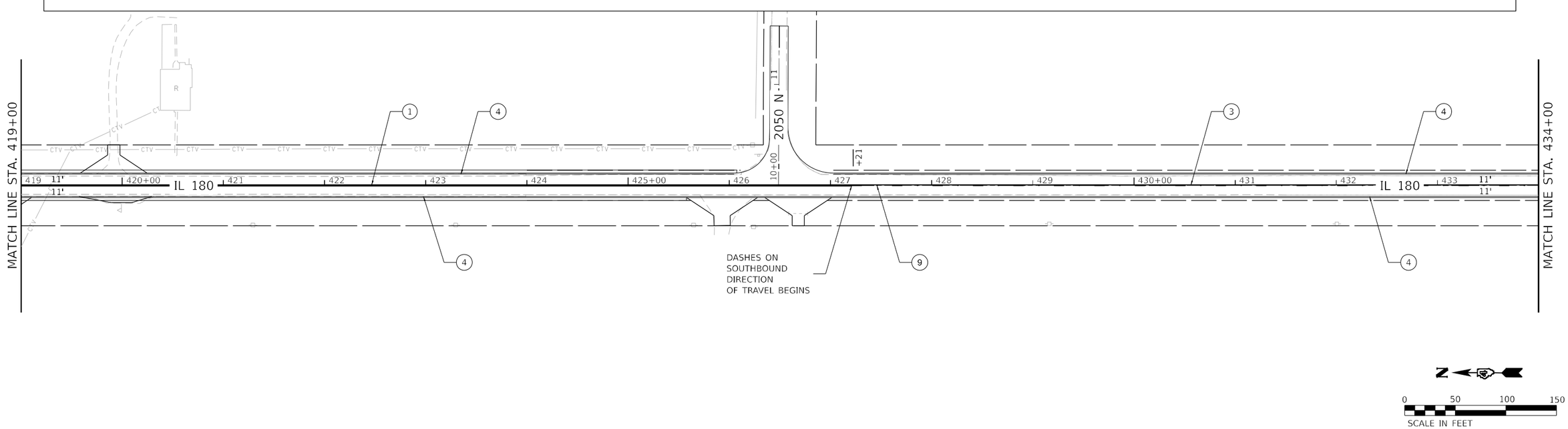

OSEH inc. 401 S CARLTON AVE SUITE 200 WHEATON, IL 60187 WWW.OSEHINC.COM	USER NAME = AlexDefrancesco	DESIGNED -	REVISED -	STATE OF ILLINOIS DEPARTMENT OF TRANSPORTATION	PROPOSED PAVEMENT MARKING PLAN	F.A.S RTE.	SECTION	COUNTY	TOTAL SHEETS	SHEET NO.
		DRAWN -	REVISED -			1195	110RS-5:(111,112,108X-1)W,RS-3	KNOX	409	221
	PLOT SCALE = 100.0000 ' / in.	CHECKED -	REVISED -					CONTRACT NO. 68E50		
	PLOT DATE = 12/18/2024	DATE -	REVISED -		SCALE: 1" = 50' SHEET 6 OF 20 SHEETS STA. TO STA.		ILLINOIS FED. AID PROJECT			

MODEL: SMODELNAMES
FILE NAME: Z:\Shared\Projects\IDOT\P-94-007-22 - Clerks\03 Design\02 CADD Sheets\Work Order 7\D468E50-PMK06.dgn

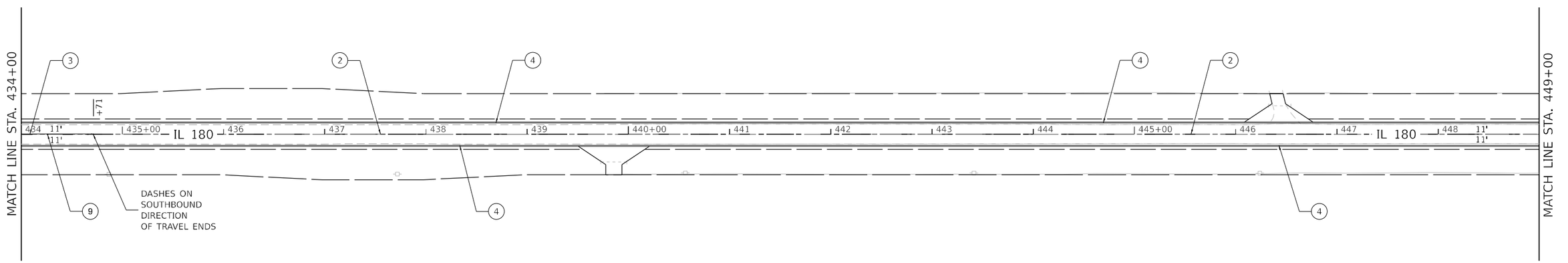

LEGEND

1. MODIFIED URETHANE PAVT MK LINE 4", DOUBLE SOLID YELLOW CENTERLINE
2. MODIFIED URETHANE PAVT MK LINE 4", SKIP DASH YELLOW LINE, 10' DASH - 30' SKIP
3. MODIFIED URETHANE PAVT MK LINE 4", ONE SOLID, ONE SKIP DASH YELLOW LINES @ 5 ½" C-C, 10' DASH - 30' SKIP
4. MODIFIED URETHANE PAVT MK LINE 6", SOLID WHITE LINE
5. MODIFIED URETHANE PAVT MK LINE 8", SOLID WHITE LINE
6. MODIFIED URETHANE PAVT MK LINE 12", SOLID WHITE LINE / DIAGONAL, 45° @ 10' MAX SPACING
7. MODIFIED URETHANE PAVT MK LINE 24", SOLID WHITE STOP BAR
8. MODIFIED URETHANE PAVT MK, LETTERS AND SYMBOLS
9. TWO-LANE RAISED REFLECTIVE PAVEMENT MARKER (STANDARD 781001-04)
10. MODIFIED URETHANE PAVT MK LINE 8", SKIP DASH WHITE LINE, 2' DASH - 6' SKIP

NOTES:

1. ALL FINAL PAVEMENT MARKINGS SHALL BE MODIFIED URETHANE PAVEMENT MARKINGS ON HMA.
2. ALL FINAL PAVEMENT MARKINGS SHALL BE PLACED IN ACCORDANCE WITH 780001-D4 "DISTRICT FOUR TYPICAL PAVEMENT MARKINGS" STANDARD DETAIL.

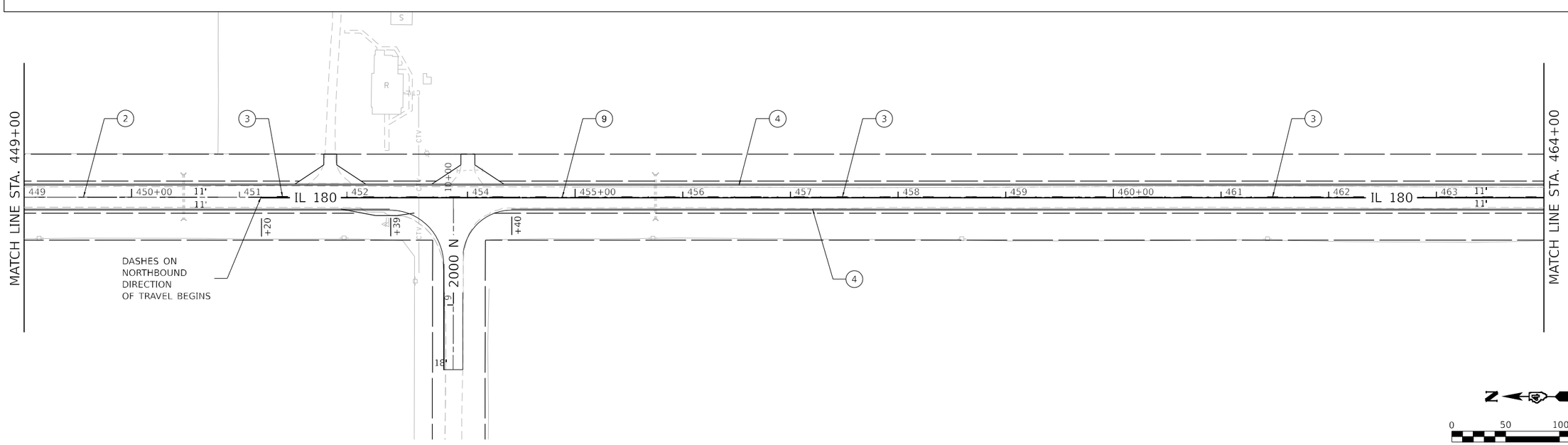

0 50 100 150
SCALE IN FEET

OSEH inc. 401 S CARLTON AVE SUITE 200 WHEATON, IL 60187 WWW.OSEHINC.COM	USER NAME = AlexDefrancesco	DESIGNED -	REVISED -
		DRAWN -	REVISED -
	PLOT SCALE = 100.0000 ' / in.	CHECKED -	REVISED -
	PLOT DATE = 12/18/2024	DATE -	REVISED -

STATE OF ILLINOIS
DEPARTMENT OF TRANSPORTATION

PROPOSED PAVEMENT MARKING PLAN

SCALE: 1" = 50' | SHEET 7 OF 20 SHEETS | STA. TO STA.

F.A.S RTE.	SECTION	COUNTY	TOTAL SHEETS	SHEET NO.
1195	110RS-5:(111,112,108X-1)W,RS-3	KNOX	409	222
		CONTRACT NO. 68E50		
		ILLINOIS FED. AID PROJECT		

MODEL: SMODELNAMES
FILE NAME: Z:\Shared\Projects\IDOT\P-94-007-22 - Clerks\03 Design\02 CADD Sheets\Work Order 7\D468E50-PMK07.dgn

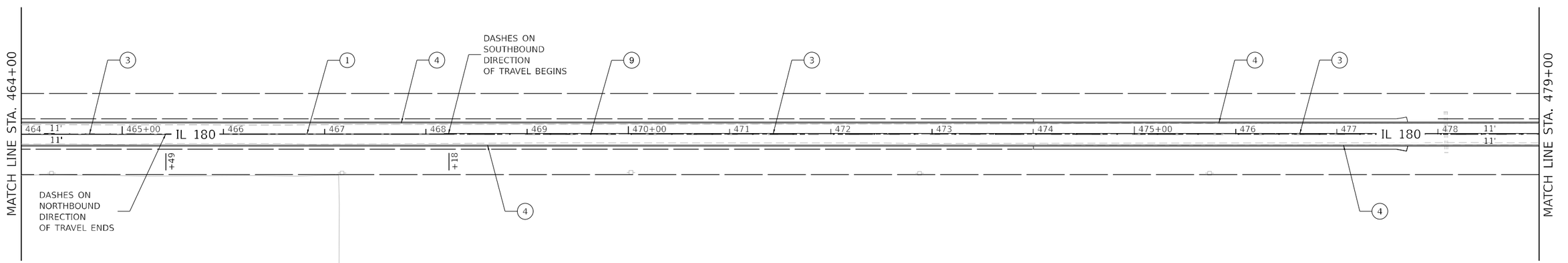

LEGEND

1. MODIFIED URETHANE PAVT MK LINE 4", DOUBLE SOLID YELLOW CENTERLINE
2. MODIFIED URETHANE PAVT MK LINE 4", SKIP DASH YELLOW LINE, 10' DASH - 30' SKIP
3. MODIFIED URETHANE PAVT MK LINE 4", ONE SOLID, ONE SKIP DASH YELLOW LINES @ 5 ½" C-C, 10' DASH - 30' SKIP
4. MODIFIED URETHANE PAVT MK LINE 6", SOLID WHITE LINE
5. MODIFIED URETHANE PAVT MK LINE 8", SOLID WHITE LINE
6. MODIFIED URETHANE PAVT MK LINE 12", SOLID WHITE LINE / DIAGONAL, 45° @ 10' MAX SPACING
7. MODIFIED URETHANE PAVT MK LINE 24", SOLID WHITE STOP BAR
8. MODIFIED URETHANE PAVT MK, LETTERS AND SYMBOLS
9. TWO-LANE RAISED REFLECTIVE PAVEMENT MARKER (STANDARD 781001-04)
10. MODIFIED URETHANE PAVT MK LINE 8", SKIP DASH WHITE LINE, 2' DASH - 6' SKIP

NOTES:

1. ALL FINAL PAVEMENT MARKINGS SHALL BE MODIFIED URETHANE PAVEMENT MARKINGS ON HMA.
2. ALL FINAL PAVEMENT MARKINGS SHALL BE PLACED IN ACCORDANCE WITH 780001-D4 "DISTRICT FOUR TYPICAL PAVEMENT MARKINGS" STANDARD DETAIL.

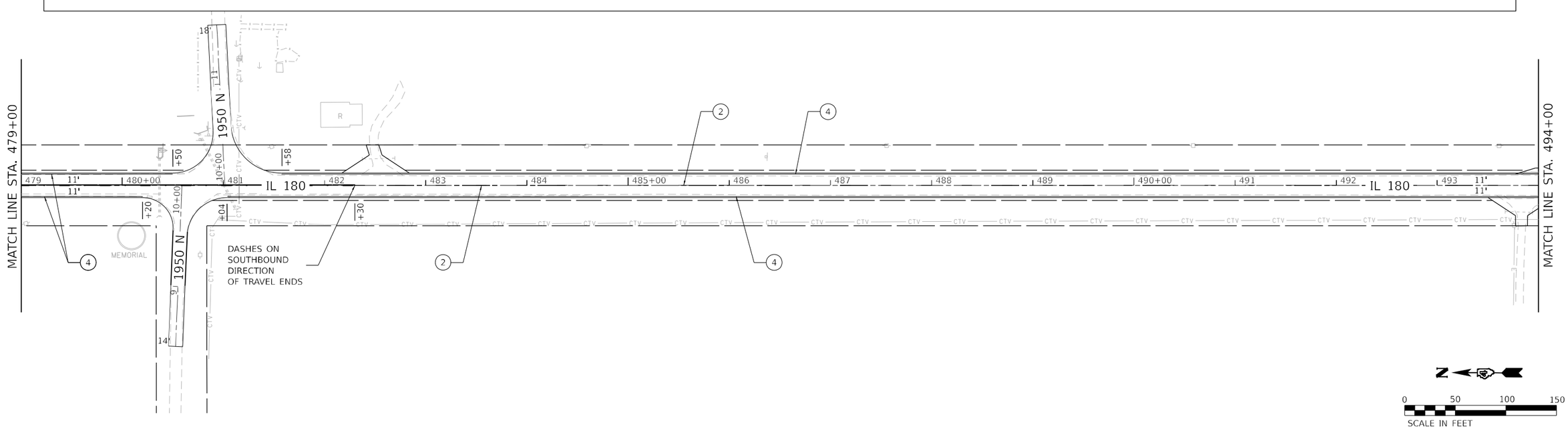

MODEL: SMODELNAMES
FILE NAME: P:\Shared\Projects\IDOT\P-94-007-22 - Clerks\03 Design\02 CADD Sheets\Work Order 7\D468E50-PMK08.dgn

OSEH inc. 401 S CARILLON AVE SUITE 200 WHEATON, IL 60187 WWW.OSEHINC.COM

USER NAME = AlexDefrancesco	DESIGNED -	REVISED -	
	DRAWN -	REVISED -	
PLOT SCALE = 100.0000 ' / in.	CHECKED -	REVISED -	
PLOT DATE = 12/18/2024	DATE -	REVISED -	

STATE OF ILLINOIS
DEPARTMENT OF TRANSPORTATION

PROPOSED PAVEMENT MARKING PLAN

SCALE: 1" = 50' | SHEET 8 OF 20 SHEETS | STA. TO STA.

F.A.S RTE.	SECTION	COUNTY	TOTAL SHEETS	SHEET NO.
1195	110RS-5:(111,112,108X-1)W,RS-3	KNOX	409	223
		CONTRACT NO. 68E50		
		ILLINOIS FED. AID PROJECT		

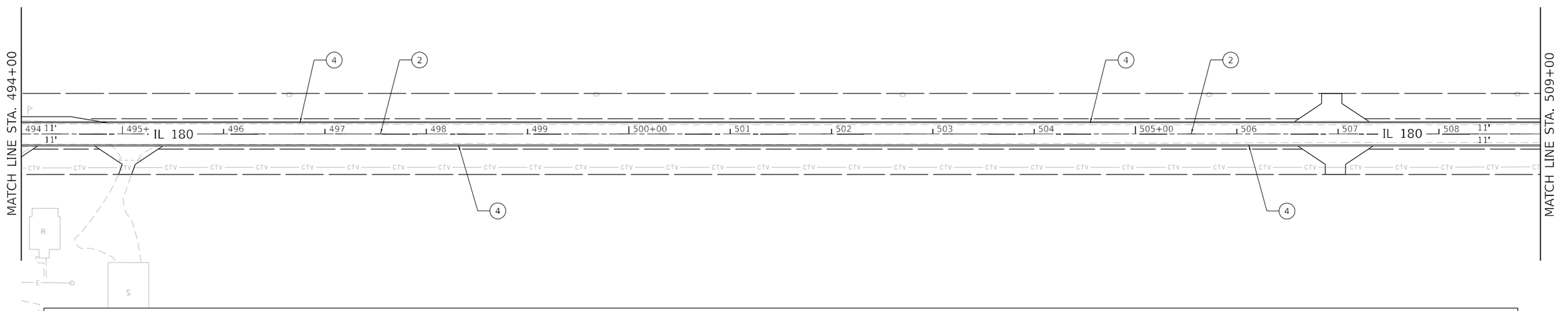

0 50 100 150
SCALE IN FEET

LEGEND

1. MODIFIED URETHANE PAVT MK LINE 4", DOUBLE SOLID YELLOW CENTERLINE
2. MODIFIED URETHANE PAVT MK LINE 4", SKIP DASH YELLOW LINE, 10' DASH - 30' SKIP
3. MODIFIED URETHANE PAVT MK LINE 4", ONE SOLID, ONE SKIP DASH YELLOW LINES @ 5 ½" C-C, 10' DASH - 30' SKIP
4. MODIFIED URETHANE PAVT MK LINE 6", SOLID WHITE LINE
5. MODIFIED URETHANE PAVT MK LINE 8", SOLID WHITE LINE
6. MODIFIED URETHANE PAVT MK LINE 12", SOLID WHITE LINE / DIAGONAL, 45° @ 10' MAX SPACING
7. MODIFIED URETHANE PAVT MK LINE 24", SOLID WHITE STOP BAR
8. MODIFIED URETHANE PAVT MK, LETTERS AND SYMBOLS
9. TWO-LANE RAISED REFLECTIVE PAVEMENT MARKER (STANDARD 781001-04)
10. MODIFIED URETHANE PAVT MK LINE 8", SKIP DASH WHITE LINE, 2' DASH - 6' SKIP

NOTES:

1. ALL FINAL PAVEMENT MARKINGS SHALL BE MODIFIED URETHANE PAVEMENT MARKINGS ON HMA.
2. ALL FINAL PAVEMENT MARKINGS SHALL BE PLACED IN ACCORDANCE WITH 780001-D4 "DISTRICT FOUR TYPICAL PAVEMENT MARKINGS" STANDARD DETAIL.

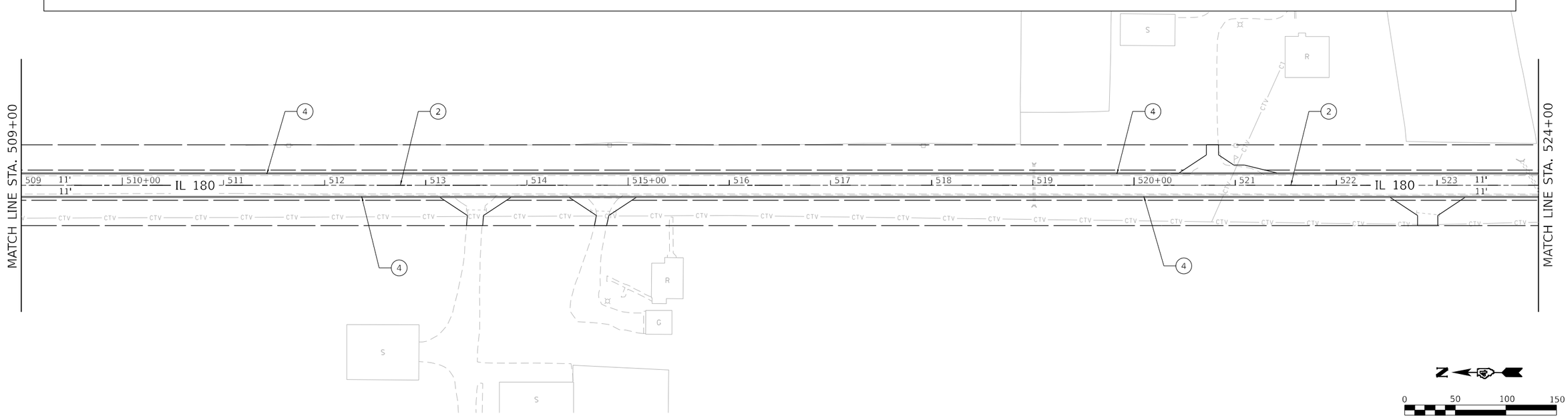

0 50 100 150
SCALE IN FEET

MODEL: SMODELNAMES
FILE NAME: Z:\Shared\Projects\IDOT\P-94-007-22 - Clerks\03 Design\02 CADD Sheets\Work Order 7\D468E5\D468E5\D468E5-PMK09.dgn

OSEH inc. 401 S CARLTON AVE SUITE 200 WHEATON, IL 60187 WWW.OSEHINC.COM	USER NAME = AlexDefrancesco	DESIGNED -	REVISED -	STATE OF ILLINOIS DEPARTMENT OF TRANSPORTATION	PROPOSED PAVEMENT MARKING PLAN	F.A.S RTE.	SECTION	COUNTY	TOTAL SHEETS / SHEET NO.
		DRAWN -	REVISED -			1195	110RS-5:(111,112,108X-1)W,RS-3	KNOX	409 / 224
	PLOT SCALE = 100.0000 ' / in.	CHECKED -	REVISED -					CONTRACT NO. 68E50	
	PLOT DATE = 12/18/2024	DATE -	REVISED -		SCALE: 1" = 50' SHEET 9 OF 20 SHEETS STA. TO STA.		ILLINOIS FED. AID PROJECT		

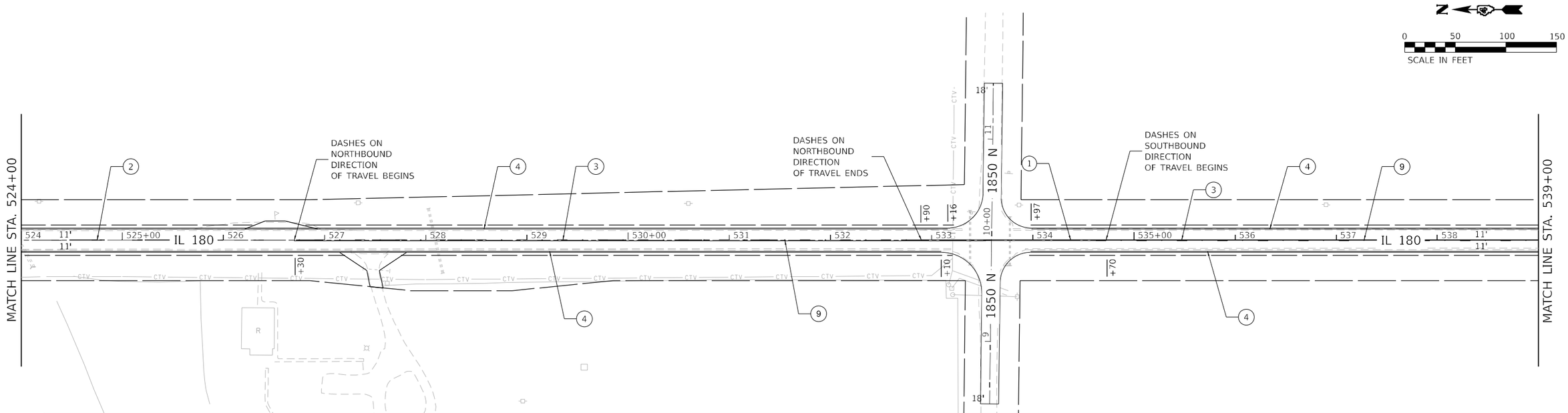

LEGEND

1. MODIFIED URETHANE PAVT MK LINE 4", DOUBLE SOLID YELLOW CENTERLINE
2. MODIFIED URETHANE PAVT MK LINE 4", SKIP DASH YELLOW LINE, 10' DASH - 30' SKIP
3. MODIFIED URETHANE PAVT MK LINE 4", ONE SOLID, ONE SKIP DASH YELLOW LINES @ 5 ½" C-C, 10' DASH - 30' SKIP
4. MODIFIED URETHANE PAVT MK LINE 6", SOLID WHITE LINE
5. MODIFIED URETHANE PAVT MK LINE 8", SOLID WHITE LINE
6. MODIFIED URETHANE PAVT MK LINE 12", SOLID WHITE LINE / DIAGONAL, 45° @ 10' MAX SPACING
7. MODIFIED URETHANE PAVT MK LINE 24", SOLID WHITE STOP BAR
8. MODIFIED URETHANE PAVT MK, LETTERS AND SYMBOLS
9. TWO-LANE RAISED REFLECTIVE PAVEMENT MARKER (STANDARD 781001-04)
10. MODIFIED URETHANE PAVT MK LINE 8", SKIP DASH WHITE LINE, 2' DASH - 6' SKIP

NOTES:

1. ALL FINAL PAVEMENT MARKINGS SHALL BE MODIFIED URETHANE PAVEMENT MARKINGS ON HMA.
2. ALL FINAL PAVEMENT MARKINGS SHALL BE PLACED IN ACCORDANCE WITH 780001-D4 "DISTRICT FOUR TYPICAL PAVEMENT MARKINGS" STANDARD DETAIL.

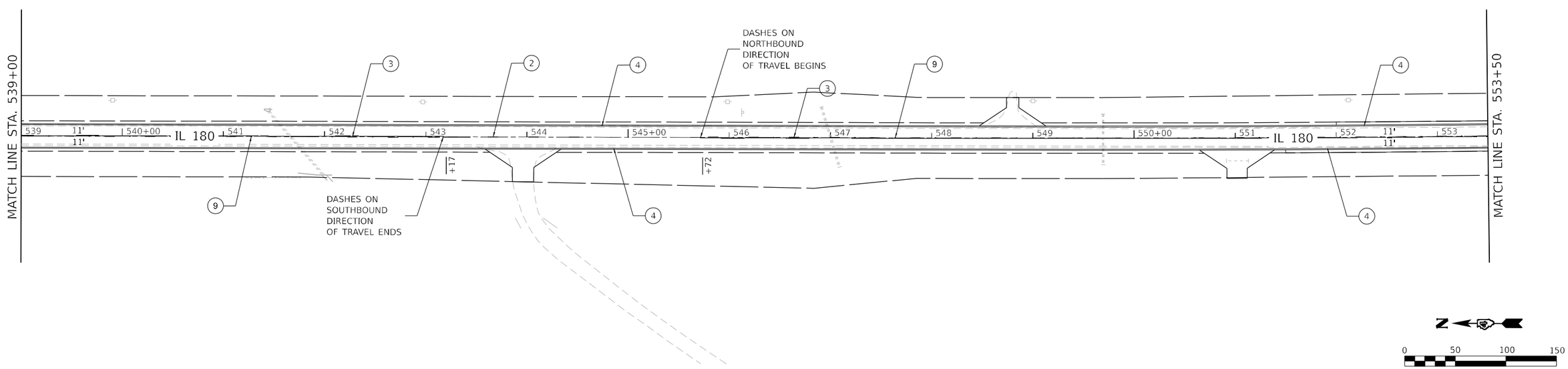

OSEH inc. 401 S CARLTON AVE SUITE 200 WHEATON, IL 60187 WWW.OSEHINC.COM	USER NAME = AlexDefrancesco	DESIGNED -	REVISED -	STATE OF ILLINOIS DEPARTMENT OF TRANSPORTATION	PROPOSED PAVEMENT MARKING PLAN	F.A.S RTE.	SECTION	COUNTY	TOTAL SHEETS	SHEET NO.
		DRAWN -	REVISED -			1195	110RS-5:(111,112,108X-1)W,RS-3	KNOX	409	225
	PLOT SCALE = 100.0000 ' / in.	CHECKED -	REVISED -					CONTRACT NO. 68E50		
	PLOT DATE = 12/18/2024	DATE -	REVISED -		SCALE: 1" = 50' SHEET 10 OF 20 SHEETS STA. TO STA.		ILLINOIS	FED. AID PROJECT		

MODEL: SMODELNAMES
FILE NAME: Z:\Shared\Projects\IDOT\P-94-007-22 - Clerks\03 Design\07 CADD Sheets\Work Order 7\D468E50-PMK10.dgn

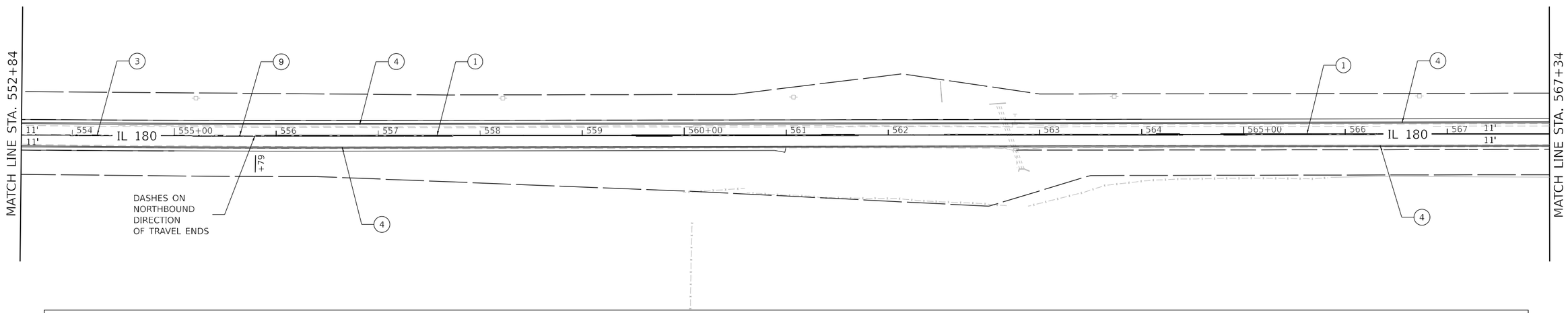

LEGEND

1. MODIFIED URETHANE PAVT MK LINE 4", DOUBLE SOLID YELLOW CENTERLINE
2. MODIFIED URETHANE PAVT MK LINE 4", SKIP DASH YELLOW LINE, 10' DASH - 30' SKIP
3. MODIFIED URETHANE PAVT MK LINE 4", ONE SOLID, ONE SKIP DASH YELLOW LINES @ 5 ½" C-C, 10' DASH - 30' SKIP
4. MODIFIED URETHANE PAVT MK LINE 6", SOLID WHITE LINE
5. MODIFIED URETHANE PAVT MK LINE 8", SOLID WHITE LINE
6. MODIFIED URETHANE PAVT MK LINE 12", SOLID WHITE LINE / DIAGONAL, 45° @ 10' MAX SPACING
7. MODIFIED URETHANE PAVT MK LINE 24", SOLID WHITE STOP BAR
8. MODIFIED URETHANE PAVT MK, LETTERS AND SYMBOLS
9. TWO-LANE RAISED REFLECTIVE PAVEMENT MARKER (STANDARD 781001-04)
10. MODIFIED URETHANE PAVT MK LINE 8", SKIP DASH WHITE LINE, 2' DASH - 6' SKIP

NOTES:

1. ALL FINAL PAVEMENT MARKINGS SHALL BE MODIFIED URETHANE PAVEMENT MARKINGS ON HMA.
2. ALL FINAL PAVEMENT MARKINGS SHALL BE PLACED IN ACCORDANCE WITH 780001-D4 "DISTRICT FOUR TYPICAL PAVEMENT MARKINGS" STANDARD DETAIL.

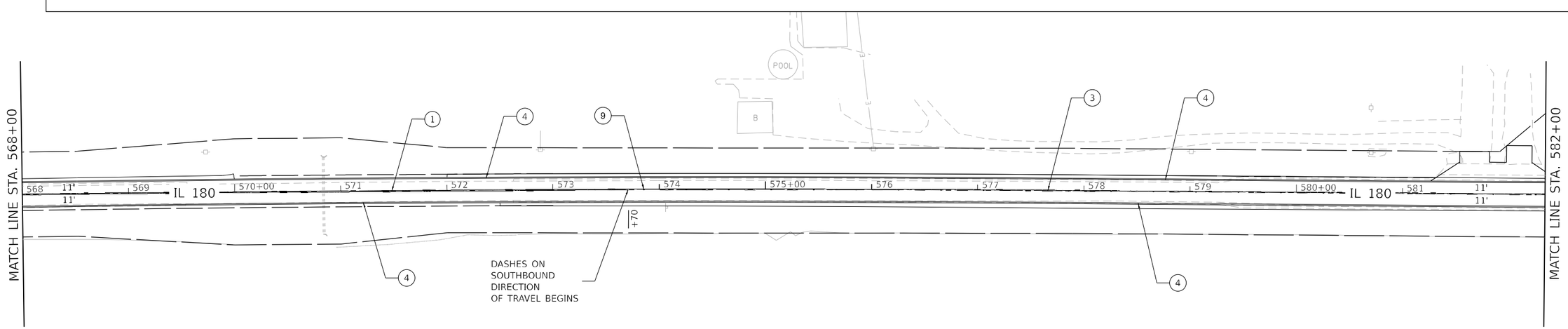

MODEL: SMODELNAMES
FILE NAME: Z:\Shared\Projects\IDOT\P-94-007-22 - Clerks\03 Design\02 CADD Sheets\Work Order 7\D468E50-PMK11.dgn

OSEH inc. 401 S CARLTON AVE SUITE 200 WHEATON, IL 60187 WWW.OSEHINC.COM	USER NAME = AlexDefrancesco	DESIGNED -	REVISED -	STATE OF ILLINOIS DEPARTMENT OF TRANSPORTATION	PROPOSED PAVEMENT MARKING PLAN	F.A.S RTE.	SECTION	COUNTY	TOTAL SHEETS / SHEET NO.
		DRAWN -	REVISED -			1195	110RS-5:(111,112,108X-1)W,RS-3	KNOX	409 / 226
	PLOT SCALE = 100.0000 ' / in.	CHECKED -	REVISED -					CONTRACT NO. 68E50	
	PLOT DATE = 12/18/2024	DATE -	REVISED -		SCALE: 1" = 50' SHEET 11 OF 20 SHEETS STA. TO STA.		ILLINOIS	FED. AID PROJECT	

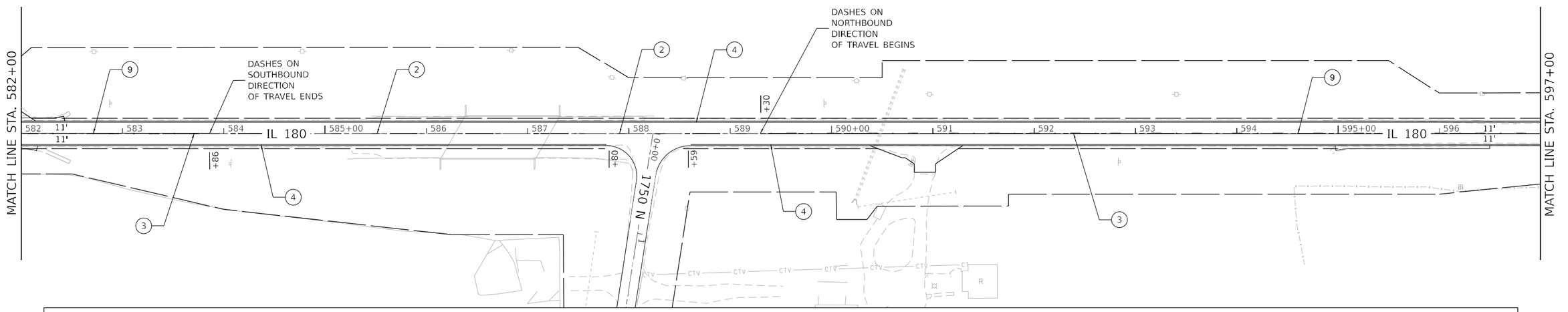

0 50 100 150
SCALE IN FEET

LEGEND

1. MODIFIED URETHANE PAVT MK LINE 4", DOUBLE SOLID YELLOW CENTERLINE
2. MODIFIED URETHANE PAVT MK LINE 4", SKIP DASH YELLOW LINE, 10' DASH - 30' SKIP
3. MODIFIED URETHANE PAVT MK LINE 4", ONE SOLID, ONE SKIP DASH YELLOW LINES @ 5 ½" C-C, 10' DASH - 30' SKIP
4. MODIFIED URETHANE PAVT MK LINE 6", SOLID WHITE LINE
5. MODIFIED URETHANE PAVT MK LINE 8", SOLID WHITE LINE
6. MODIFIED URETHANE PAVT MK LINE 12", SOLID WHITE LINE / DIAGONAL, 45° @ 10' MAX SPACING
7. MODIFIED URETHANE PAVT MK LINE 24", SOLID WHITE STOP BAR
8. MODIFIED URETHANE PAVT MK, LETTERS AND SYMBOLS
9. TWO-LANE RAISED REFLECTIVE PAVEMENT MARKER (STANDARD 781001-04)
10. MODIFIED URETHANE PAVT MK LINE 8", SKIP DASH WHITE LINE, 2' DASH - 6' SKIP

NOTES:

1. ALL FINAL PAVEMENT MARKINGS SHALL BE MODIFIED URETHANE PAVEMENT MARKINGS ON HMA.
2. ALL FINAL PAVEMENT MARKINGS SHALL BE PLACED IN ACCORDANCE WITH 780001-D4 "DISTRICT FOUR TYPICAL PAVEMENT MARKINGS" STANDARD DETAIL.

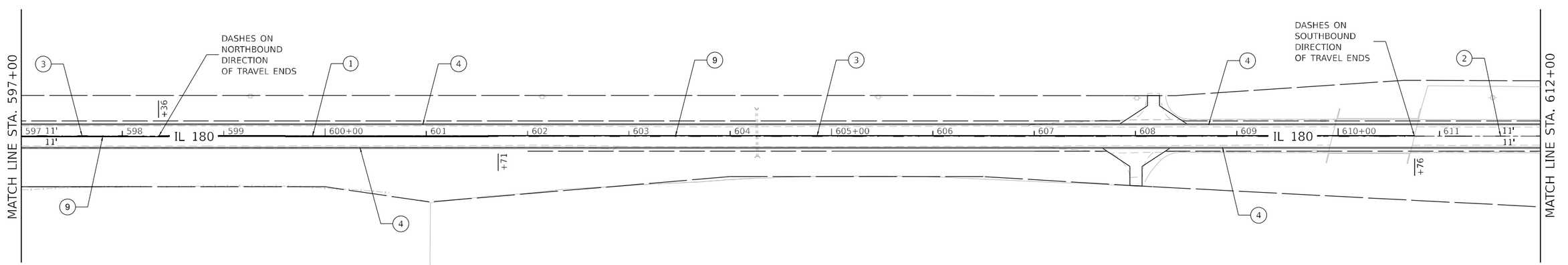

0 50 100 150
SCALE IN FEET

MODEL: SMODELNAMES
FILE NAME: Z:\Shared\Projects\IDOT\P-94-007-22 - Clerks\03 Design\02 CADD Sheets\Work Order 71D468E5\PMK12.dgn

OSEH inc. 401 S CARILLON AVE SUITE 200 WHEATON, IL 60187 WWW.OSEHINC.COM	USER NAME = AlexDefrancesco	DESIGNED -	REVISED -	STATE OF ILLINOIS DEPARTMENT OF TRANSPORTATION	PROPOSED PAVEMENT MARKING PLAN	F.A.S RTE.	SECTION	COUNTY	TOTAL SHEETS / SHEET NO.
		DRAWN -	REVISED -			1195	110RS-5:(111,112,108X-1)W,RS-3	KNOX	409 / 227
	PLOT SCALE = 100.0000 ' / in.	CHECKED -	REVISED -					CONTRACT NO. 68E50	
	PLOT DATE = 12/18/2024	DATE -	REVISED -		SCALE: 1" = 50' / SHEET 12 OF 20 SHEETS / STA. TO STA.		ILLINOIS	FED. AID PROJECT	

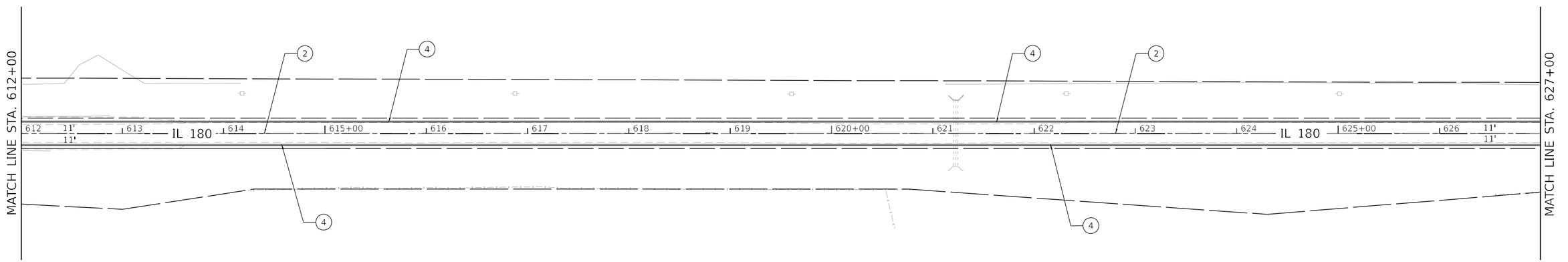

0 50 100 150
SCALE IN FEET

LEGEND

1. MODIFIED URETHANE PAVT MK LINE 4", DOUBLE SOLID YELLOW CENTERLINE
2. MODIFIED URETHANE PAVT MK LINE 4", SKIP DASH YELLOW LINE, 10' DASH - 30' SKIP
3. MODIFIED URETHANE PAVT MK LINE 4", ONE SOLID, ONE SKIP DASH YELLOW LINES @ 5 ½" C-C, 10' DASH - 30' SKIP
4. MODIFIED URETHANE PAVT MK LINE 6", SOLID WHITE LINE
5. MODIFIED URETHANE PAVT MK LINE 8", SOLID WHITE LINE
6. MODIFIED URETHANE PAVT MK LINE 12", SOLID WHITE LINE / DIAGONAL, 45° @ 10' MAX SPACING
7. MODIFIED URETHANE PAVT MK LINE 24", SOLID WHITE STOP BAR
8. MODIFIED URETHANE PAVT MK, LETTERS AND SYMBOLS
9. TWO-LANE RAISED REFLECTIVE PAVEMENT MARKER (STANDARD 781001-04)
10. MODIFIED URETHANE PAVT MK LINE 8", SKIP DASH WHITE LINE, 2' DASH - 6' SKIP

NOTES:

1. ALL FINAL PAVEMENT MARKINGS SHALL BE MODIFIED URETHANE PAVEMENT MARKINGS ON HMA.
2. ALL FINAL PAVEMENT MARKINGS SHALL BE PLACED IN ACCORDANCE WITH 780001-D4 "DISTRICT FOUR TYPICAL PAVEMENT MARKINGS" STANDARD DETAIL.

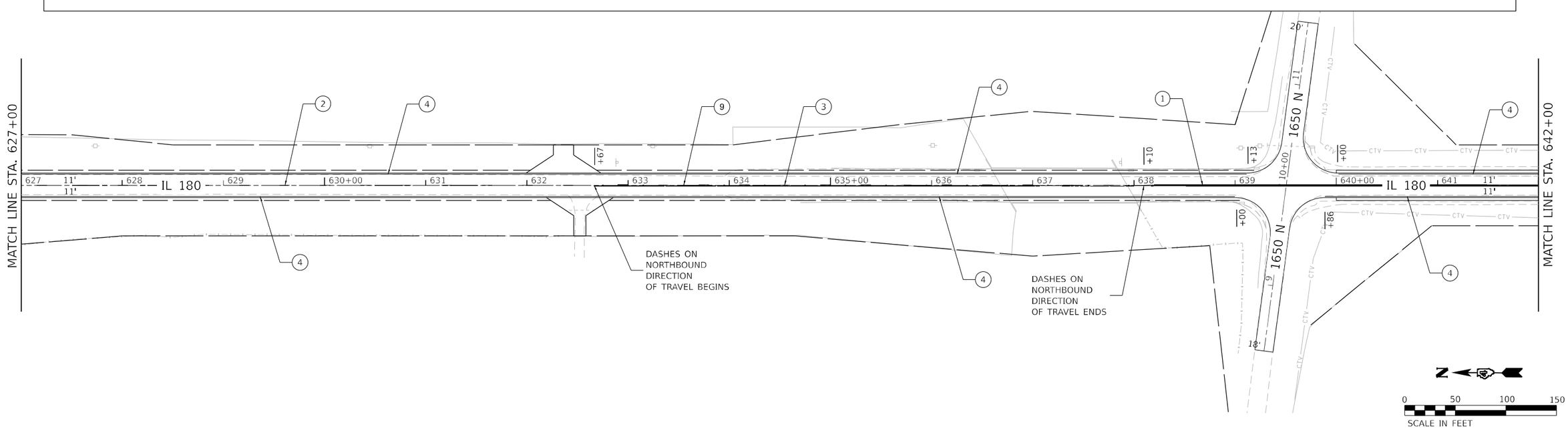

0 50 100 150
SCALE IN FEET

MODEL: SMODELNAMES
FILE NAME: Z:\Shared\Projects\IDOT\P-94-007-22 - Clerks\03 Design\07 CADD Sheets\Work Order 7\D468E50-PMK13.dgn

OSEH inc. 401 S CARLTON AVE SUITE 200 WHEATON, IL 60187 WWW.OSEHINC.COM	USER NAME = AlexDefrancesco	DESIGNED -	REVISED -	STATE OF ILLINOIS DEPARTMENT OF TRANSPORTATION	PROPOSED PAVEMENT MARKING PLAN	F.A.S RTE.	SECTION	COUNTY	TOTAL SHEETS / SHEET NO.
		DRAWN -	REVISED -			1195	110RS-5:(111,112,108X-1)W,RS-3	KNOX	409 / 228
	PLOT SCALE = 100.0000 ' / in.	CHECKED -	REVISED -					CONTRACT NO. 68E50	
	PLOT DATE = 12/18/2024	DATE -	REVISED -		SCALE: 1" = 50' SHEET 13 OF 20 SHEETS STA. TO STA.		ILLINOIS FED. AID PROJECT		

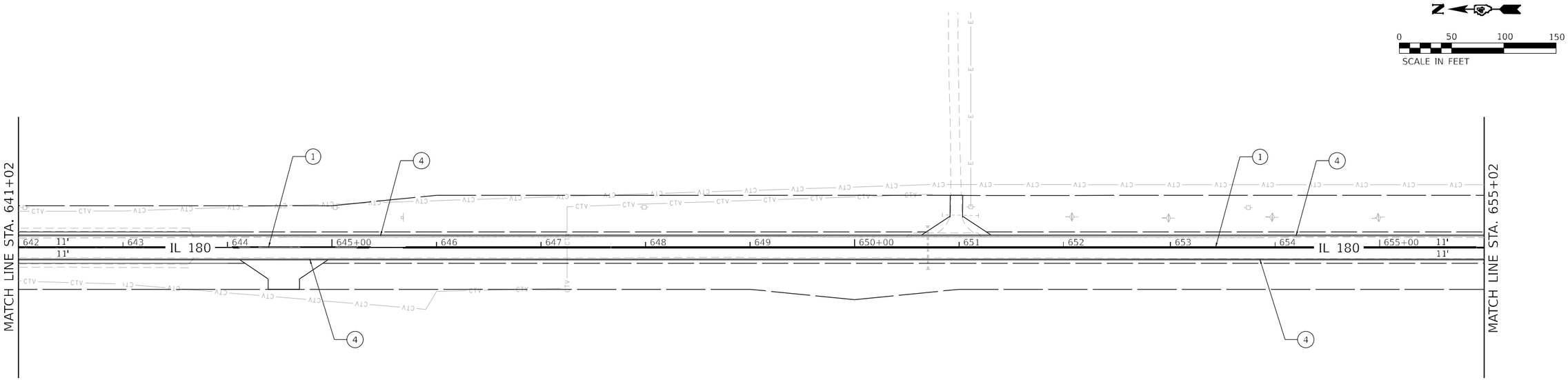

LEGEND

1. MODIFIED URETHANE PAVT MK LINE 4", DOUBLE SOLID YELLOW CENTERLINE
2. MODIFIED URETHANE PAVT MK LINE 4", SKIP DASH YELLOW LINE, 10' DASH - 30' SKIP
3. MODIFIED URETHANE PAVT MK LINE 4", ONE SOLID, ONE SKIP DASH YELLOW LINES @ 5 ½" C-C, 10' DASH - 30' SKIP
4. MODIFIED URETHANE PAVT MK LINE 6", SOLID WHITE LINE
5. MODIFIED URETHANE PAVT MK LINE 8", SOLID WHITE LINE
6. MODIFIED URETHANE PAVT MK LINE 12", SOLID WHITE LINE / DIAGONAL, 45° @ 10' MAX SPACING
7. MODIFIED URETHANE PAVT MK LINE 24", SOLID WHITE STOP BAR
8. MODIFIED URETHANE PAVT MK, LETTERS AND SYMBOLS
9. TWO-LANE RAISED REFLECTIVE PAVEMENT MARKER (STANDARD 781001-04)
10. MODIFIED URETHANE PAVT MK LINE 8", SKIP DASH WHITE LINE, 2' DASH - 6' SKIP

NOTES:

1. ALL FINAL PAVEMENT MARKINGS SHALL BE MODIFIED URETHANE PAVEMENT MARKINGS ON HMA.
2. ALL FINAL PAVEMENT MARKINGS SHALL BE PLACED IN ACCORDANCE WITH 780001-D4 "DISTRICT FOUR TYPICAL PAVEMENT MARKINGS" STANDARD DETAIL.

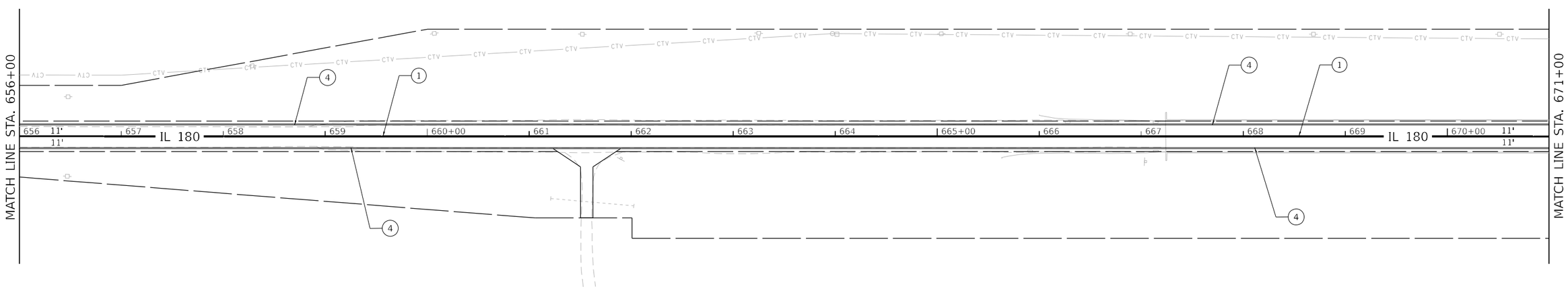

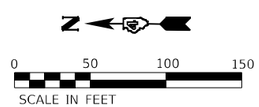

MODEL: SMODELNAMES
FILE NAME: P:\Shared\Projects\HOTW-94-007-22 - Clerks\03 Design\02 CADD Sheets\Work Order 7\D468E50-PMK14.dgn

OSEH inc. 401 S CARILLON AVE SUITE 200 WHEATON, IL 60187 WWW.OSEHINC.COM	USER NAME = AlexDefrancesco	DESIGNED -	REVISED -	STATE OF ILLINOIS DEPARTMENT OF TRANSPORTATION	PROPOSED PAVEMENT MARKING PLAN	F.A.S RTE.	SECTION	COUNTY	TOTAL SHEETS	SHEET NO.
		DRAWN -	REVISED -			1195	110RS-5:(111,112,108X-1)W,RS-3	KNOX	409	229
	PLOT SCALE = 100.0000 ' / in.	CHECKED -	REVISED -					CONTRACT NO. 68E50		
	PLOT DATE = 12/18/2024	DATE -	REVISED -		SCALE: 1" = 50' SHEET 14 OF 20 SHEETS STA. TO STA.		ILLINOIS FED. AID PROJECT			

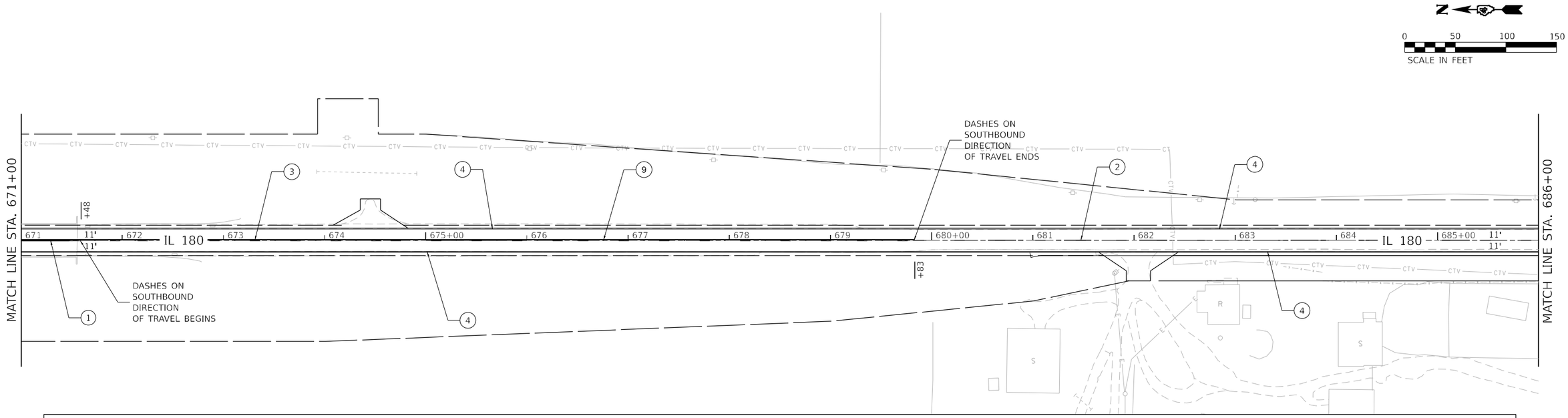

LEGEND

1. MODIFIED URETHANE PAVT MK LINE 4", DOUBLE SOLID YELLOW CENTERLINE
2. MODIFIED URETHANE PAVT MK LINE 4", SKIP DASH YELLOW LINE, 10' DASH - 30' SKIP
3. MODIFIED URETHANE PAVT MK LINE 4", ONE SOLID, ONE SKIP DASH YELLOW LINES @ 5 ½" C-C, 10' DASH - 30' SKIP
4. MODIFIED URETHANE PAVT MK LINE 6", SOLID WHITE LINE
5. MODIFIED URETHANE PAVT MK LINE 8", SOLID WHITE LINE
6. MODIFIED URETHANE PAVT MK LINE 12", SOLID WHITE LINE / DIAGONAL, 45° @ 10' MAX SPACING
7. MODIFIED URETHANE PAVT MK LINE 24", SOLID WHITE STOP BAR
8. MODIFIED URETHANE PAVT MK, LETTERS AND SYMBOLS
9. TWO-LANE RAISED REFLECTIVE PAVEMENT MARKER (STANDARD 781001-04)
10. MODIFIED URETHANE PAVT MK LINE 8", SKIP DASH WHITE LINE, 2' DASH - 6' SKIP

NOTES:

1. ALL FINAL PAVEMENT MARKINGS SHALL BE MODIFIED URETHANE PAVEMENT MARKINGS ON HMA.
2. ALL FINAL PAVEMENT MARKINGS SHALL BE PLACED IN ACCORDANCE WITH 780001-D4 "DISTRICT FOUR TYPICAL PAVEMENT MARKINGS" STANDARD DETAIL.

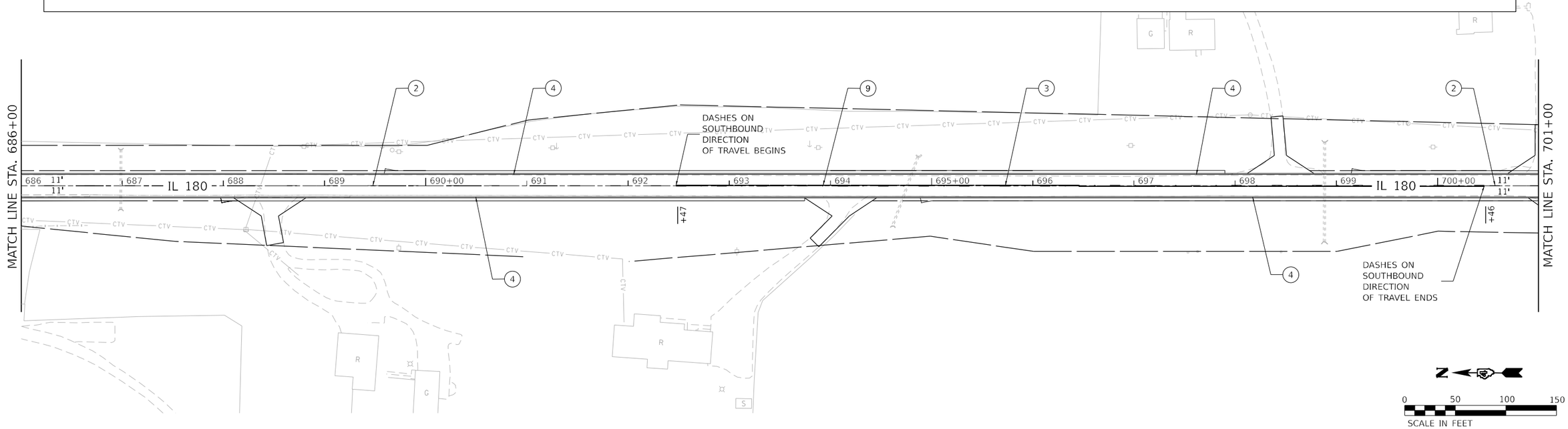

OSEH inc. 401 S CARLTON AVE SUITE 200 WHEATON, IL 60187 WWW.OSEHINC.COM	USER NAME = AlexDefrancesco	DESIGNED -	REVISED -	STATE OF ILLINOIS DEPARTMENT OF TRANSPORTATION	PROPOSED PAVEMENT MARKING PLAN	F.A.S RTE.	SECTION	COUNTY	TOTAL SHEETS	SHEET NO.
		DRAWN -	REVISED -			1195	110RS-5:(111,112,108X-1)W,RS-3	KNOX	409	230
	PLOT SCALE = 100.0000 ' / in.	CHECKED -	REVISED -					CONTRACT NO. 68E50		
	PLOT DATE = 12/18/2024	DATE -	REVISED -		SCALE: 1" = 50' SHEET 15 OF 20 SHEETS STA. TO STA.		ILLINOIS FED. AID PROJECT			

MODEL: SMODELNAMES
FILE NAME: Z:\Shared\Projects\IDOT\P-94-007-22 - Cicero\03 Design\02 CADD Sheets\Work Order 7\D468E50-PMK15.dgn

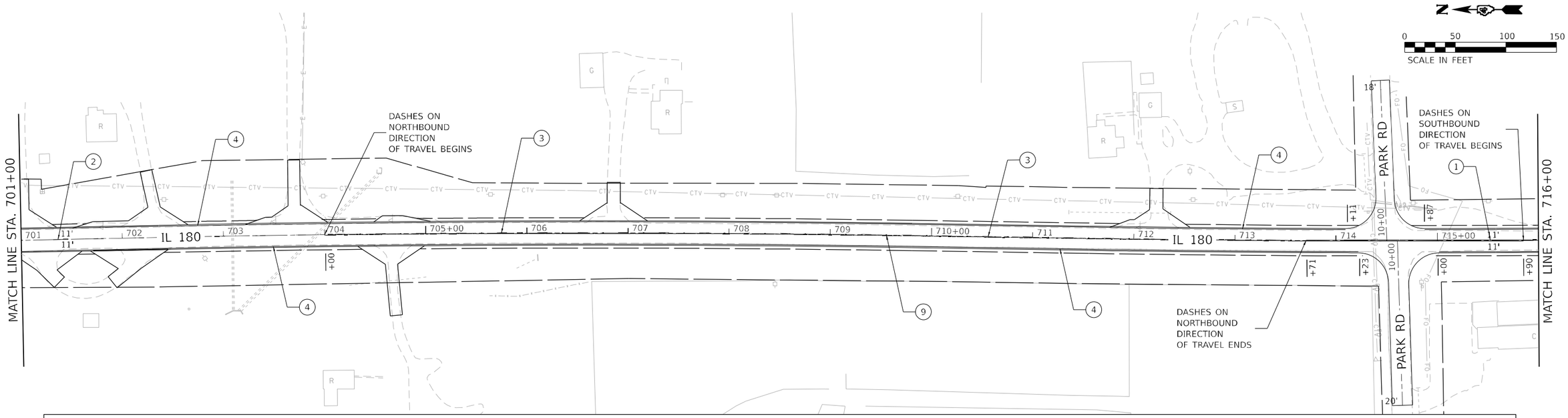

LEGEND

1. MODIFIED URETHANE PAVT MK LINE 4", DOUBLE SOLID YELLOW CENTERLINE
2. MODIFIED URETHANE PAVT MK LINE 4", SKIP DASH YELLOW LINE, 10' DASH - 30' SKIP
3. MODIFIED URETHANE PAVT MK LINE 4", ONE SOLID, ONE SKIP DASH YELLOW LINES @ 5 ½" C-C, 10' DASH - 30' SKIP
4. MODIFIED URETHANE PAVT MK LINE 6", SOLID WHITE LINE
5. MODIFIED URETHANE PAVT MK LINE 8", SOLID WHITE LINE
6. MODIFIED URETHANE PAVT MK LINE 12", SOLID WHITE LINE / DIAGONAL, 45° @ 10' MAX SPACING
7. MODIFIED URETHANE PAVT MK LINE 24", SOLID WHITE STOP BAR
8. MODIFIED URETHANE PAVT MK, LETTERS AND SYMBOLS
9. TWO-LANE RAISED REFLECTIVE PAVEMENT MARKER (STANDARD 781001-04)
10. MODIFIED URETHANE PAVT MK LINE 8", SKIP DASH WHITE LINE, 2' DASH - 6' SKIP

NOTES:

1. ALL FINAL PAVEMENT MARKINGS SHALL BE MODIFIED URETHANE PAVEMENT MARKINGS ON HMA.
2. ALL FINAL PAVEMENT MARKINGS SHALL BE PLACED IN ACCORDANCE WITH 780001-D4 "DISTRICT FOUR TYPICAL PAVEMENT MARKINGS" STANDARD DETAIL.

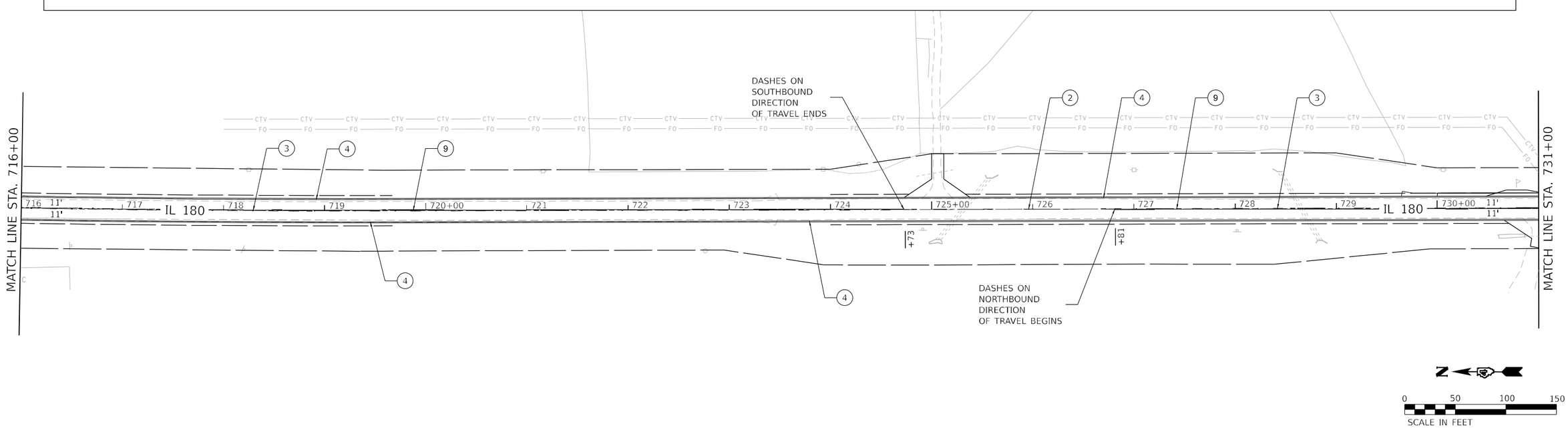

OSEH inc. 401 S CARLTON AVE SUITE 200 WHEATON, IL 60187 WWW.OSEHINC.COM	USER NAME = AlexDefrancesco	DESIGNED -	REVISED -	STATE OF ILLINOIS DEPARTMENT OF TRANSPORTATION	PROPOSED PAVEMENT MARKING PLAN	F.A.S RTE.	SECTION	COUNTY	TOTAL SHEETS / SHEET NO.
		DRAWN -	REVISED -			1195	110RS-5:(111,112,108X-1)W,RS-3	KNOX	409 / 231
	PLOT SCALE = 100.0000 ' / in.	CHECKED -	REVISED -					CONTRACT NO. 68E50	
	PLOT DATE = 12/18/2024	DATE -	REVISED -		SCALE: 1" = 50' SHEET 16 OF 20 SHEETS STA. TO STA.		ILLINOIS	FED. AID PROJECT	

MODEL: SMODELNAMES
FILE NAME: Z:\Shared\Projects\IDOT\P-94-007-22 - Clerks\03 Design\02 CADD Sheets\Work Order 71D468E5\D-PMK16.dgn

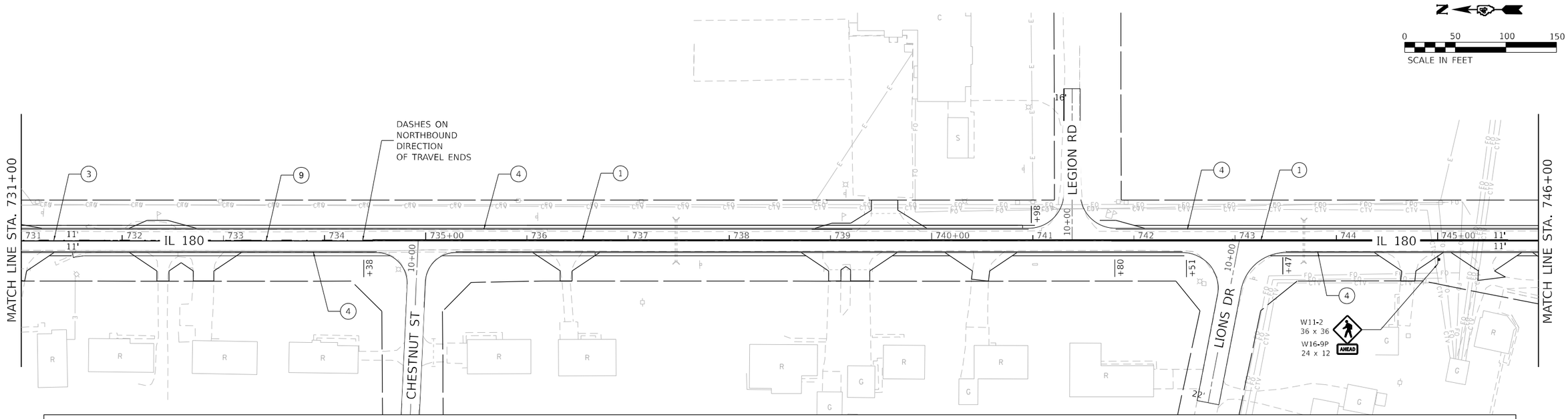

LEGEND

1. MODIFIED URETHANE PAVT MK LINE 4", DOUBLE SOLID YELLOW CENTERLINE
2. MODIFIED URETHANE PAVT MK LINE 4", SKIP DASH YELLOW LINE, 10' DASH - 30' SKIP
3. MODIFIED URETHANE PAVT MK LINE 4", ONE SOLID, ONE SKIP DASH YELLOW LINES @ 5 ½" C-C, 10' DASH - 30' SKIP
4. MODIFIED URETHANE PAVT MK LINE 6", SOLID WHITE LINE
5. MODIFIED URETHANE PAVT MK LINE 8", SOLID WHITE LINE
6. MODIFIED URETHANE PAVT MK LINE 12", SOLID WHITE LINE / DIAGONAL, 45° @ 10' MAX SPACING
7. MODIFIED URETHANE PAVT MK LINE 24", SOLID WHITE STOP BAR
8. MODIFIED URETHANE PAVT MK, LETTERS AND SYMBOLS
9. TWO-LANE RAISED REFLECTIVE PAVEMENT MARKER (STANDARD 781001-04)
10. MODIFIED URETHANE PAVT MK LINE 8", SKIP DASH WHITE LINE, 2' DASH - 6' SKIP

NOTES:

1. ALL FINAL PAVEMENT MARKINGS SHALL BE MODIFIED URETHANE PAVEMENT MARKINGS ON HMA.
2. ALL FINAL PAVEMENT MARKINGS SHALL BE PLACED IN ACCORDANCE WITH 780001-D4 "DISTRICT FOUR TYPICAL PAVEMENT MARKINGS" STANDARD DETAIL.
3. REFER TO THE RECTANGULAR RAPID FLASHING BEACON CONSTRUCTION DETAIL FOR THE LIST OF ITEMS INCLUDED IN THE RRFB ASSEMBLY THAT WILL BE PAID FOR WITH THE RECTANGULAR RAPID FLASHING BEACON ASSEMBLY (COMPLETE) (X1400326) PAY ITEM.

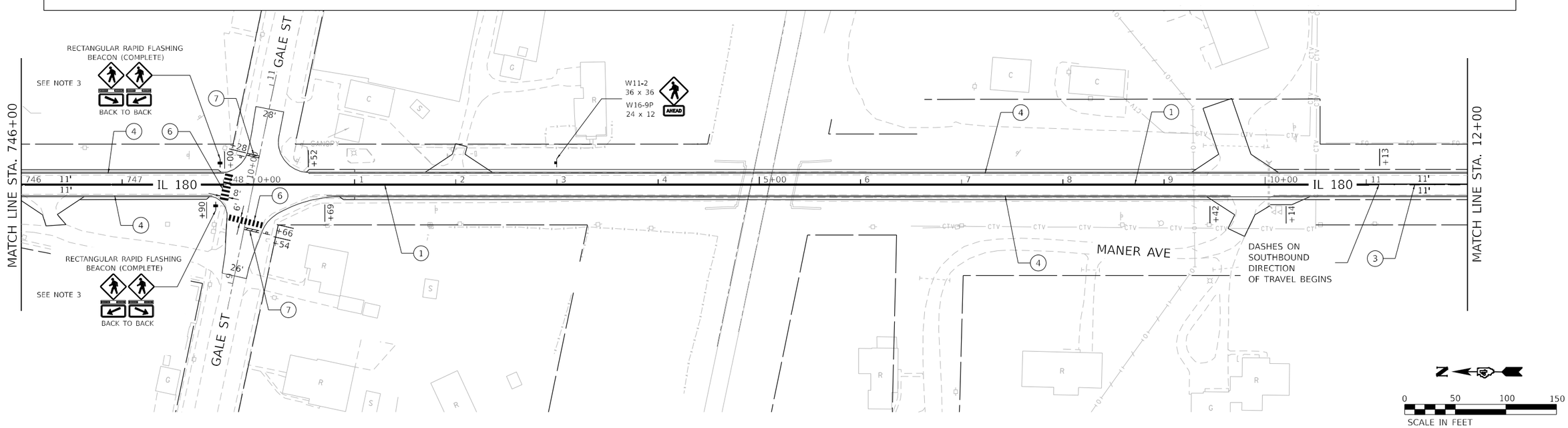

OSEH inc. 401 S CARLTON AVE SUITE 200 WHEATON, IL 60187 WWW.OSEHINC.COM	USER NAME = AlexDefrancesco	DESIGNED -	REVISED -
		DRAWN -	REVISED -
	PLOT SCALE = 100.0000 ' / in.	CHECKED -	REVISED -
	PLOT DATE = 12/18/2024	DATE -	REVISED -

STATE OF ILLINOIS
DEPARTMENT OF TRANSPORTATION

PROPOSED PAVEMENT MARKING PLAN

SCALE: 1" = 50' | SHEET 17 OF 20 SHEETS | STA. TO STA.

F.A.S RTE.	SECTION	COUNTY	TOTAL SHEETS	SHEET NO.
1195	110RS-5:(111,112,108X-1)W,RS-3	KNOX	409	232
		CONTRACT NO. 68E50		
		ILLINOIS FED. AID PROJECT		

MODEL: SMODELNAMES
FILE NAME: Z:\Shared\Projects\IDOT\P-94-007-22 - Cleba\03 Design\02 CADD Sheets\Work Order 7\D468E50-PMK17.dgn

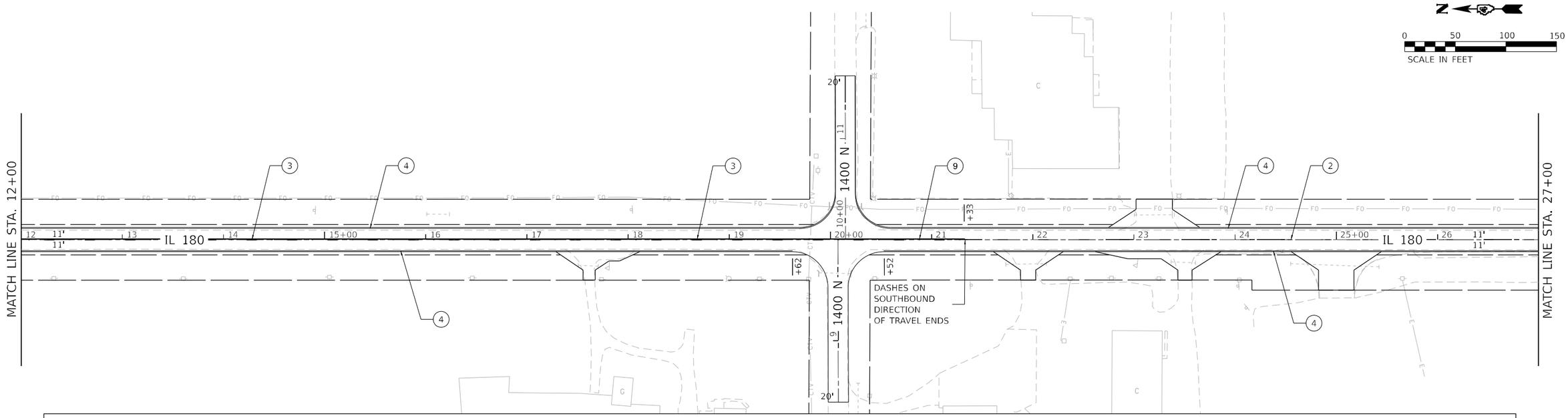

LEGEND

1. MODIFIED URETHANE PAVT MK LINE 4", DOUBLE SOLID YELLOW CENTERLINE
2. MODIFIED URETHANE PAVT MK LINE 4", SKIP DASH YELLOW LINE, 10' DASH - 30' SKIP
3. MODIFIED URETHANE PAVT MK LINE 4", ONE SOLID, ONE SKIP DASH YELLOW LINES @ 5 ½" C-C, 10' DASH - 30' SKIP
4. MODIFIED URETHANE PAVT MK LINE 6", SOLID WHITE LINE
5. MODIFIED URETHANE PAVT MK LINE 8", SOLID WHITE LINE
6. MODIFIED URETHANE PAVT MK LINE 12", SOLID WHITE LINE / DIAGONAL, 45° @ 10' MAX SPACING
7. MODIFIED URETHANE PAVT MK LINE 24", SOLID WHITE STOP BAR
8. MODIFIED URETHANE PAVT MK, LETTERS AND SYMBOLS
9. TWO-LANE RAISED REFLECTIVE PAVEMENT MARKER (STANDARD 781001-04)
10. MODIFIED URETHANE PAVT MK LINE 8", SKIP DASH WHITE LINE, 2' DASH - 6' SKIP

NOTES:

1. ALL FINAL PAVEMENT MARKINGS SHALL BE MODIFIED URETHANE PAVEMENT MARKINGS ON HMA.
2. ALL FINAL PAVEMENT MARKINGS SHALL BE PLACED IN ACCORDANCE WITH 780001-D4 "DISTRICT FOUR TYPICAL PAVEMENT MARKINGS" STANDARD DETAIL.

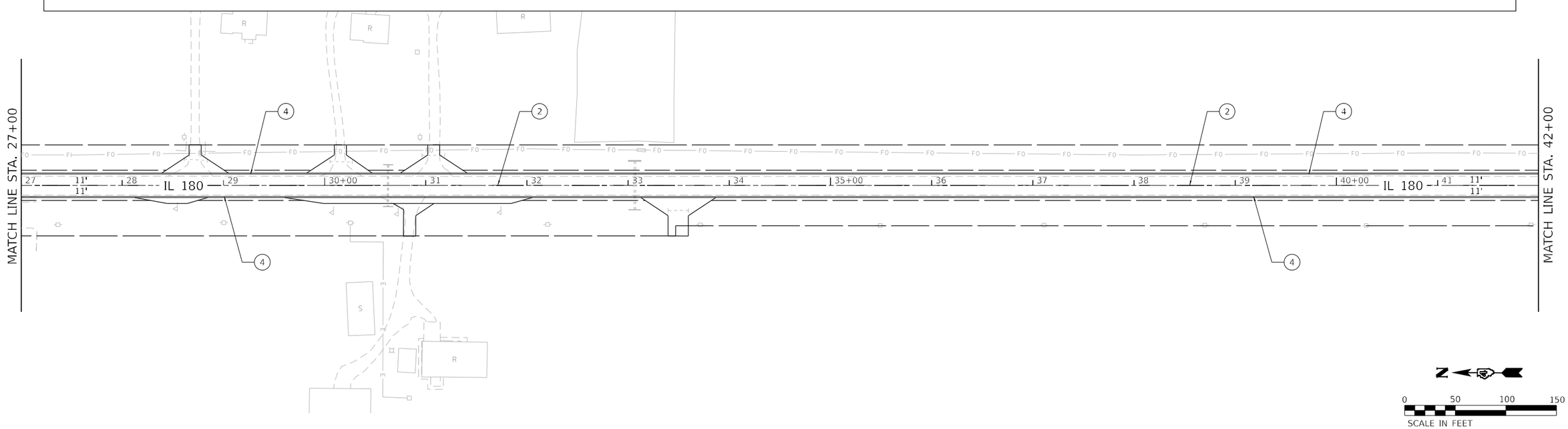

MODEL: SMODELNAMES
FILE NAME: Z:\Shared\Projects\IDOT\P-94-007-22 - Clerks\03 Design\02 CADD Sheets\Work Order 7\D468E50-PMK18.dgn

OSEH inc. 401 S CARILLON AVE SUITE 200 WHEATON, IL 60187 WWW.OSEHINC.COM	USER NAME = AlexDefrancesco	DESIGNED -	REVISED -	STATE OF ILLINOIS DEPARTMENT OF TRANSPORTATION	PROPOSED PAVEMENT MARKING PLAN	F.A.S RTE.	SECTION	COUNTY	TOTAL SHEETS / SHEET NO.
		DRAWN -	REVISED -			1195	110RS-5:(111,112,108X-1)W,RS-3	KNOX	409 / 233
	PLOT SCALE = 100.0000 ' / in.	CHECKED -	REVISED -					CONTRACT NO. 68E50	
	PLOT DATE = 12/18/2024	DATE -	REVISED -		SCALE: 1" = 50' SHEET 18 OF 20 SHEETS STA. TO STA.		ILLINOIS FED. AID PROJECT		

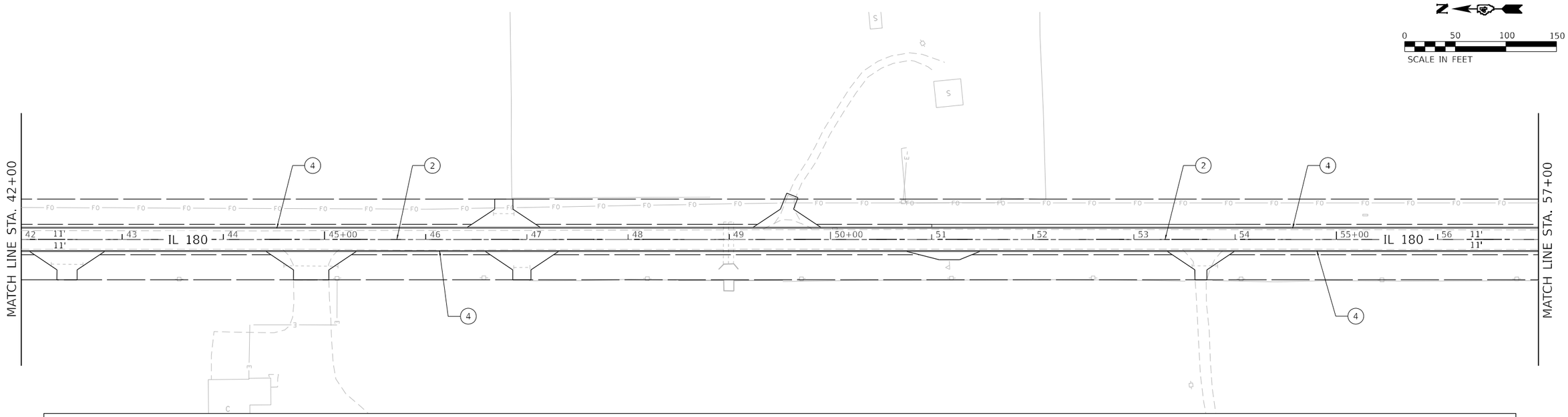

LEGEND

1. MODIFIED URETHANE PAVT MK LINE 4", DOUBLE SOLID YELLOW CENTERLINE
2. MODIFIED URETHANE PAVT MK LINE 4", SKIP DASH YELLOW LINE, 10' DASH - 30' SKIP
3. MODIFIED URETHANE PAVT MK LINE 4", ONE SOLID, ONE SKIP DASH YELLOW LINES @ 5 ½" C-C, 10' DASH - 30' SKIP
4. MODIFIED URETHANE PAVT MK LINE 6", SOLID WHITE LINE
5. MODIFIED URETHANE PAVT MK LINE 8", SOLID WHITE LINE
6. MODIFIED URETHANE PAVT MK LINE 12", SOLID WHITE LINE / DIAGONAL, 45° @ 10' MAX SPACING
7. MODIFIED URETHANE PAVT MK LINE 24", SOLID WHITE STOP BAR
8. MODIFIED URETHANE PAVT MK, LETTERS AND SYMBOLS
9. TWO-LANE RAISED REFLECTIVE PAVEMENT MARKER (STANDARD 781001-04)
10. MODIFIED URETHANE PAVT MK LINE 8", SKIP DASH WHITE LINE, 2' DASH - 6' SKIP

NOTES:

1. ALL FINAL PAVEMENT MARKINGS SHALL BE MODIFIED URETHANE PAVEMENT MARKINGS ON HMA.
2. ALL FINAL PAVEMENT MARKINGS SHALL BE PLACED IN ACCORDANCE WITH 780001-D4 "DISTRICT FOUR TYPICAL PAVEMENT MARKINGS" STANDARD DETAIL.

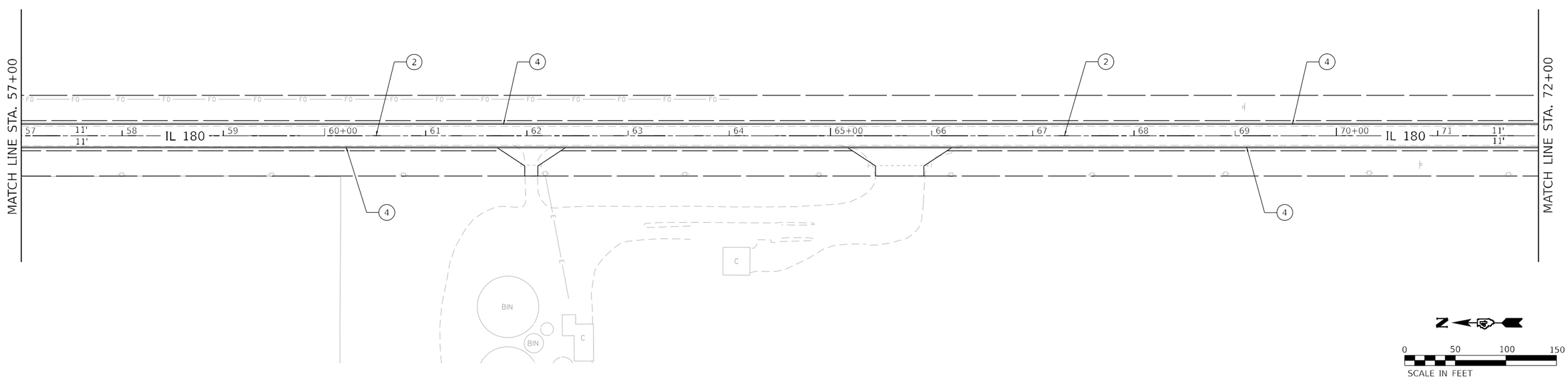

MODEL: SMODELNAMES
FILE NAME: Z:\Shared\Projects\IDOT\P-94-007-22 - Clerks\03 Design\02 CADD Sheets\Work Order 71D468E5\J-PMK19.dgn

OSEH inc. 401 S CARLTON AVE SUITE 200 WHEATON, IL 60187 WWW.OSEHINC.COM	USER NAME = AlexDefrancesco	DESIGNED -	REVISED -	STATE OF ILLINOIS DEPARTMENT OF TRANSPORTATION	PROPOSED PAVEMENT MARKING PLAN	F.A.S RTE.	SECTION	COUNTY	TOTAL SHEETS / SHEET NO.
		DRAWN -	REVISED -			1195	110RS-5:(111,112,108X-1)W,RS-3	KNOX	409 / 234
	PLOT SCALE = 100.0000 ' / in.	CHECKED -	REVISED -					CONTRACT NO. 68E50	
	PLOT DATE = 12/18/2024	DATE -	REVISED -		SCALE: 1" = 50' / SHEET 19 OF 20 SHEETS / STA. TO STA.		ILLINOIS FED. AID PROJECT		

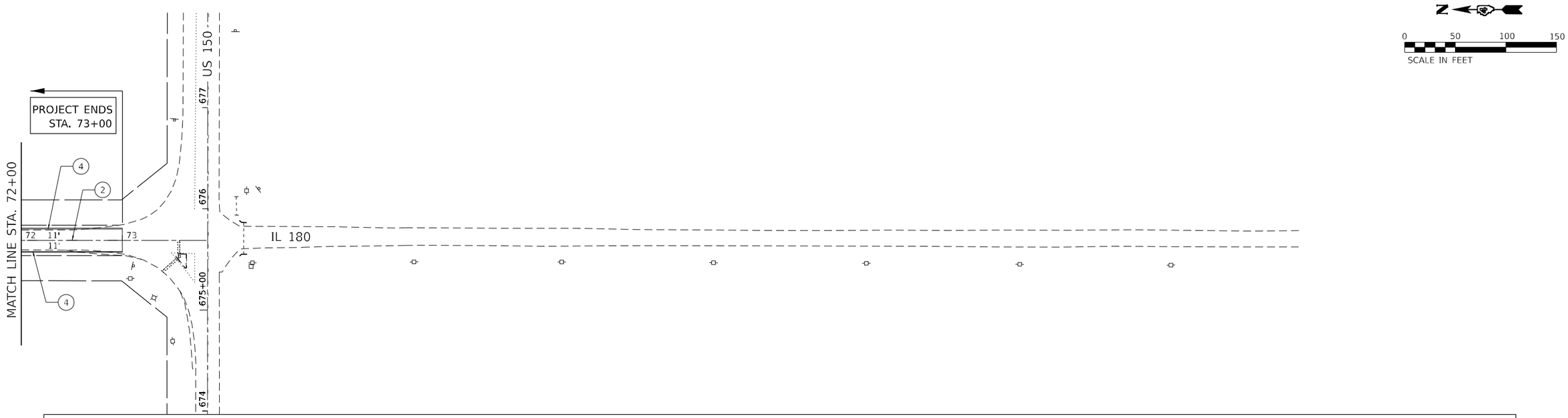

LEGEND

1. MODIFIED URETHANE PAVT MK LINE 4", DOUBLE SOLID YELLOW CENTERLINE
2. MODIFIED URETHANE PAVT MK LINE 4", SKIP DASH YELLOW LINE, 10' DASH - 30' SKIP
3. MODIFIED URETHANE PAVT MK LINE 4", ONE SOLID, ONE SKIP DASH YELLOW LINES @ 5 ½" C-C, 10' DASH - 30' SKIP
4. MODIFIED URETHANE PAVT MK LINE 6", SOLID WHITE LINE
5. MODIFIED URETHANE PAVT MK LINE 8", SOLID WHITE LINE
6. MODIFIED URETHANE PAVT MK LINE 12", SOLID WHITE LINE / DIAGONAL, 45° @ 10' MAX SPACING
7. MODIFIED URETHANE PAVT MK LINE 24", SOLID WHITE STOP BAR
8. MODIFIED URETHANE PAVT MK, LETTERS AND SYMBOLS
9. TWO-LANE RAISED REFLECTIVE PAVEMENT MARKER (STANDARD 781001-04)
10. MODIFIED URETHANE PAVT MK LINE 8", SKIP DASH WHITE LINE, 2' DASH - 6' SKIP

NOTES:

1. ALL FINAL PAVEMENT MARKINGS SHALL BE MODIFIED URETHANE PAVEMENT MARKINGS ON HMA.
2. ALL FINAL PAVEMENT MARKINGS SHALL BE PLACED IN ACCORDANCE WITH 780001-D4 "DISTRICT FOUR TYPICAL PAVEMENT MARKINGS" STANDARD DETAIL.

MODEL: SMODELNAMES
FILE NAME: P:\Shared\Projects\IDOT\P-94-007-22 - Clerks\03 Design\02 CADD Sheets\Work Order 7\D468E50-PMK20.dgn

OSEH inc. 401 S CARLTON AVE SUITE 200 WHEATON, IL 60187 WWW.OSEHINC.COM	USER NAME = AlexDefrancesco	DESIGNED -	REVISED -	STATE OF ILLINOIS DEPARTMENT OF TRANSPORTATION	PROPOSED PAVEMENT MARKING PLAN	F.A.S RTE.	SECTION	COUNTY	TOTAL SHEETS / SHEET NO.
		DRAWN -	REVISED -			1195	110RS-5:(111,112,108X-1)W,RS-3	KNOX	409 / 235
	PLOT SCALE = 100.0000 ' / in.	CHECKED -	REVISED -					CONTRACT NO. 68E50	
	PLOT DATE = 12/18/2024	DATE -	REVISED -		SCALE: 1" = 50' SHEET 20 OF 20 SHEETS STA. TO STA.		ILLINOIS FED. AID PROJECT		

STATE OF ILLINOIS
DEPARTMENT OF TRANSPORTATION

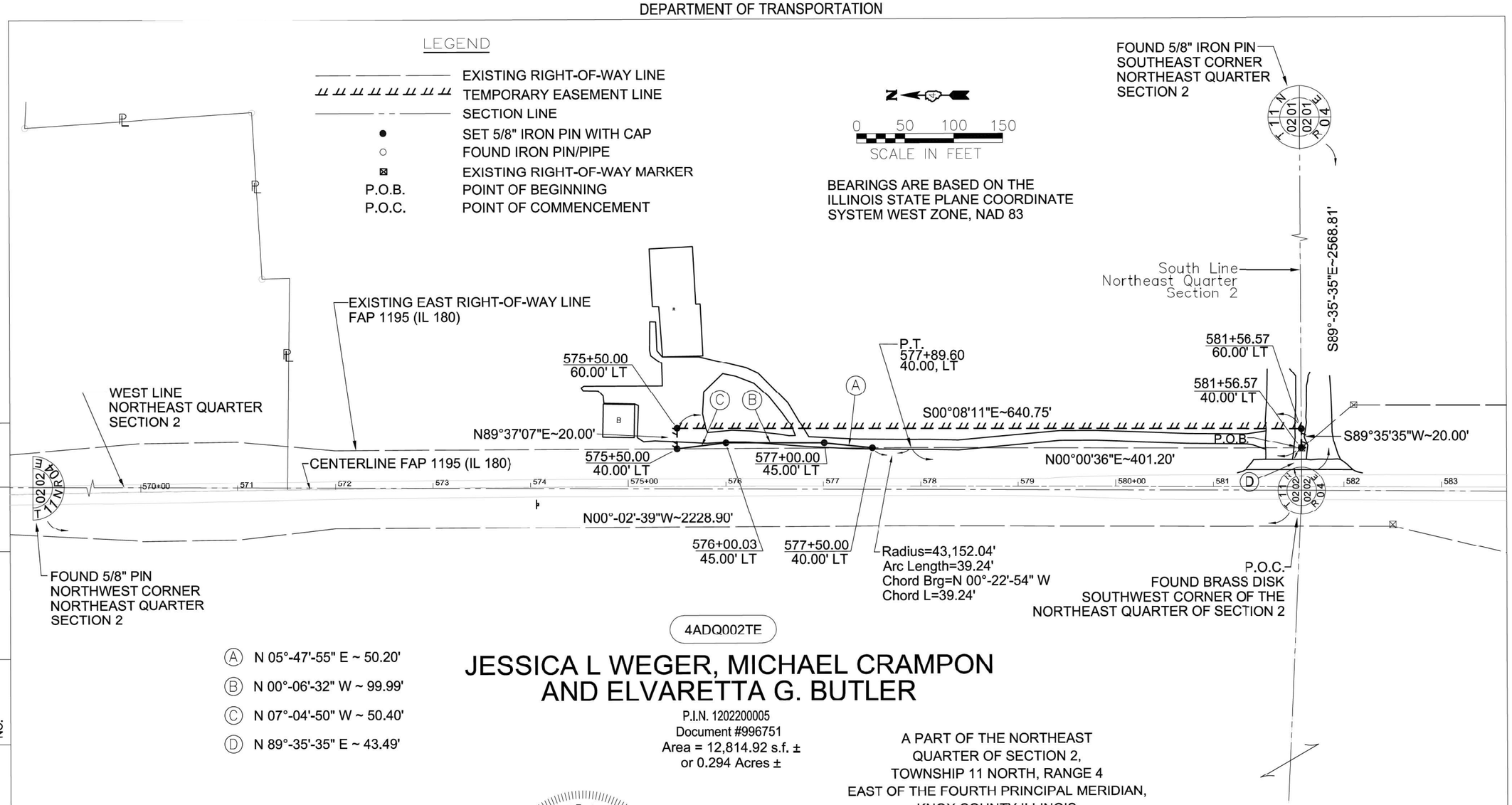

STATE OF ILLINOIS
DEPARTMENT OF TRANSPORTATION

(A) S 89°49'57" E~12.63'
(B) S 01°14'08" E~37.14'
(C) S 01°14'08" E~100.81'
(D) S 00°58'21" E~100.12'
(E) S 04°51'54" W~52.19'
(F) N 89°30'56" W~42.94'

LEGEND

——— ——— ———	EXISTING RIGHT-OF-WAY LINE
- ıı ıı ıı ıı ıı ıı ıı ıı	TEMPORARY EASEMENT LINE
——— - - ———	SECTION LINE
●	SET 5/8" IRON PIN WITH CAP
○	FOUND IRON PIN/PIPE
P.O.B.	POINT OF BEGINNING
P.O.C.	POINT OF COMMENCEMENT

N

0 50 100 150
SCALE IN FEET

BEARINGS ARE BASED ON THE ILLINOIS STATE PLANE COORDINATE SYSTEM WEST ZONE, NAD 83

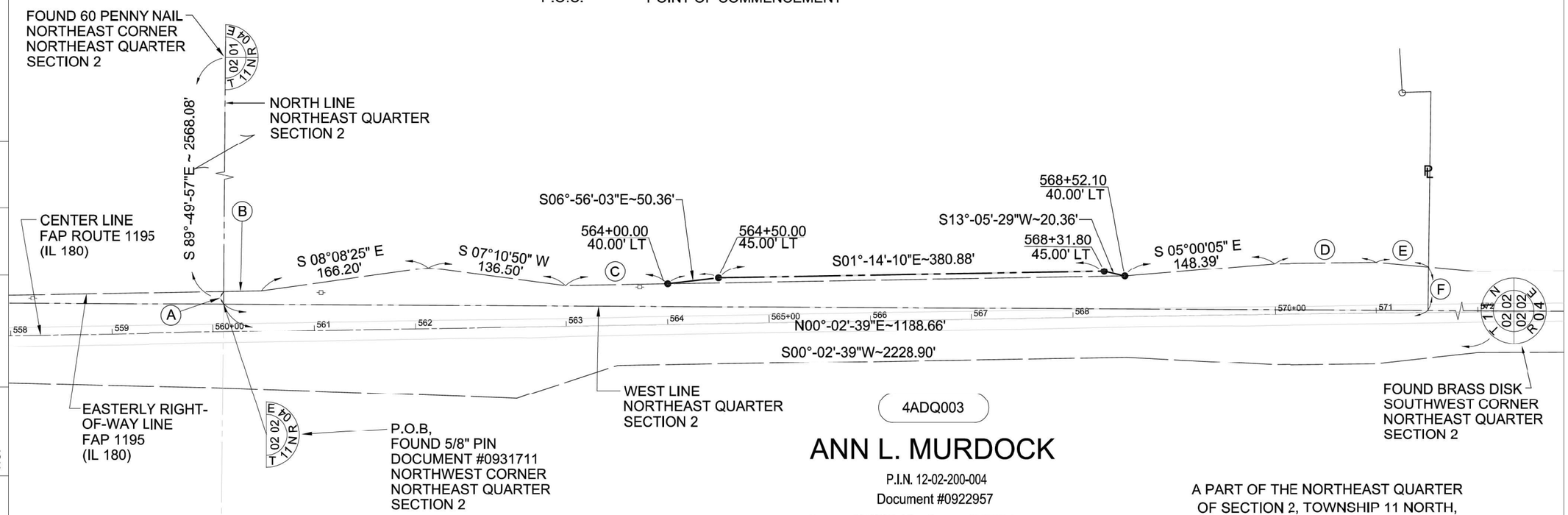

4ADQ003

ANN L. MURDOCK

P.I.N. 12-02-200-004
Document #0922957

Area = 37893.10 s.f. ± or 0.870 Acres ±
of which 35805.75 s.f. ± or 0.822 Acres ± falls
within Existing Public Road Right-of-Way

A PART OF THE NORTHEAST QUARTER
OF SECTION 2, TOWNSHIP 11 NORTH,
RANGE 4 EAST OF THE 4th P.M.
KNOX COUNTY, ILLINOIS

THIS IS TO CERTIFY THAT THIS IS A TRUE AND CORRECT PLAT OF SURVEY MADE UNDER MY DIRECTION FOR THE ILLINOIS DEPARTMENT OF TRANSPORTATION. THIS PROFESSIONAL SERVICE CONFORMS TO THE CURRENT ILLINOIS MINIMUM STANDARDS FOR A BOUNDARY SURVEY.

Daniel J. Driscoll

Feb. 1, 2024

DANIEL J. DRISCOLL - ILLINOIS PROFESSIONAL
LAND SURVEYOR NUMBER 35-3347
MY LICENSE EXPIRES 11/30/2024

STATE OF ILLINOIS
DANIEL J. DRISCOLL
NO. 3347
CANTON
PROFESSIONAL LAND SURVEYOR

FIELD WORK COMPLETION: August/2023

KNOX COUNTY

RIGHT OF WAY PLAT

FAP ROUTE 1195 (IL 180)
SHEET 1 OF 1
SCALE: 1" = 50'
AUGUST/2023

CONSTRUCTION SECTION: 10W-1,RS-5;(111,112,108X-1)W,RS-3
JOB NO. R-94-003-23
CATALOG NO. 035640-00

TERRA Engineering LTD
401 Main Street Suite 1560
Peoria, IL 61602
309-999-0123

IL Professional Design Firm
Number 184-003610

REVISED:

Signed Recorded BOOK PAGE
DOCUMENT NO.

4ADQ003

CONTRACT NO: 68E50

	BY	DATE
COMPUTED	DJD	Jan. 30, 2024
CHECKED	EST	Jan. 31, 2024
INKED	XEL	Jan. 30, 2024
INK CHECKED	DJD	Jan. 30, 2024

R.O.W. PLAT
NOTE BOOK
NO.

CAD DRAWING:
ROW PROJECT:
FILE:

DATE PLOTTED = 12/18/2024 10:49:16 AM
PAGE PLOTTED = 0/2/3/4/5/6/7/8/9/10
PLOT CONFIG = CGI-PDF.cfg
MODEL: $MODEL$NAME$
FILE NAME: N:\PROJ\0021484.07\CADD\Shtdetails\Rot of Highways\0468E50-Plat.dgn

CiorbaGroup
8725 W. Higgins Rd, Ste 600, Chicago, IL 60631
P 773.775.4009 | www.ciorba.com

USER NAME = Roadway	DESIGNED - AEC	REVISED -	
	DRAWN - AMS	REVISED -	
PLOT SCALE = 105.0104 ' / in.	CHECKED - NDF	REVISED -	
PLOT DATE = 12/18/2024	DATE - 5/31/2024	REVISED -	

STATE OF ILLINOIS
DEPARTMENT OF TRANSPORTATION

IL 180 WIDENING AND RESURFACING
PLAT OF HIGHWAYS

SCALE: SHEET OF SHEETS STA. TO STA.

F.A.S. RTE.	SECTION	COUNTY	TOTAL SHEETS	SHEET NO.
1195	*	KNOX	409	238
* 110RS-5;(111,112,108X-1)W,RS-3		CONTRACT NO. 68E50		
		ILLINOIS FED. AID PROJECT		

STATE OF ILLINOIS
DEPARTMENT OF TRANSPORTATION

CONTRACT NO: 68E50

LEGEND

	EXISTING RIGHT-OF-WAY LINE
	TEMPORARY EASEMENT LINE
	SECTION LINE
	PROPOSED RIGHT-OF-WAY LINE
●	SET 5/8" IRON PIN WITH CAP
○	FOUND IRON PIN/PIPE
P.O.B.	POINT OF BEGINNING
P.O.C.	POINT OF COMMENCEMENT

A	N00°18'59"E~80.14'
B	N89°41'01"W~40.04'
C	N13°08'23"W~155.29'
D	N13°03'06"E~ 102.39'
E	N00°38'39"W~160.00'
F	N64°04'45"E~28.30'
G	S00°00'38"W~22.46'
H	S08°38'55"W~75.84'

0 50 100 150
SCALE IN FEET

BEARINGS ARE BASED ON THE ILLINOIS STATE PLANE COORDINATE SYSTEM WEST ZONE, NAD 83

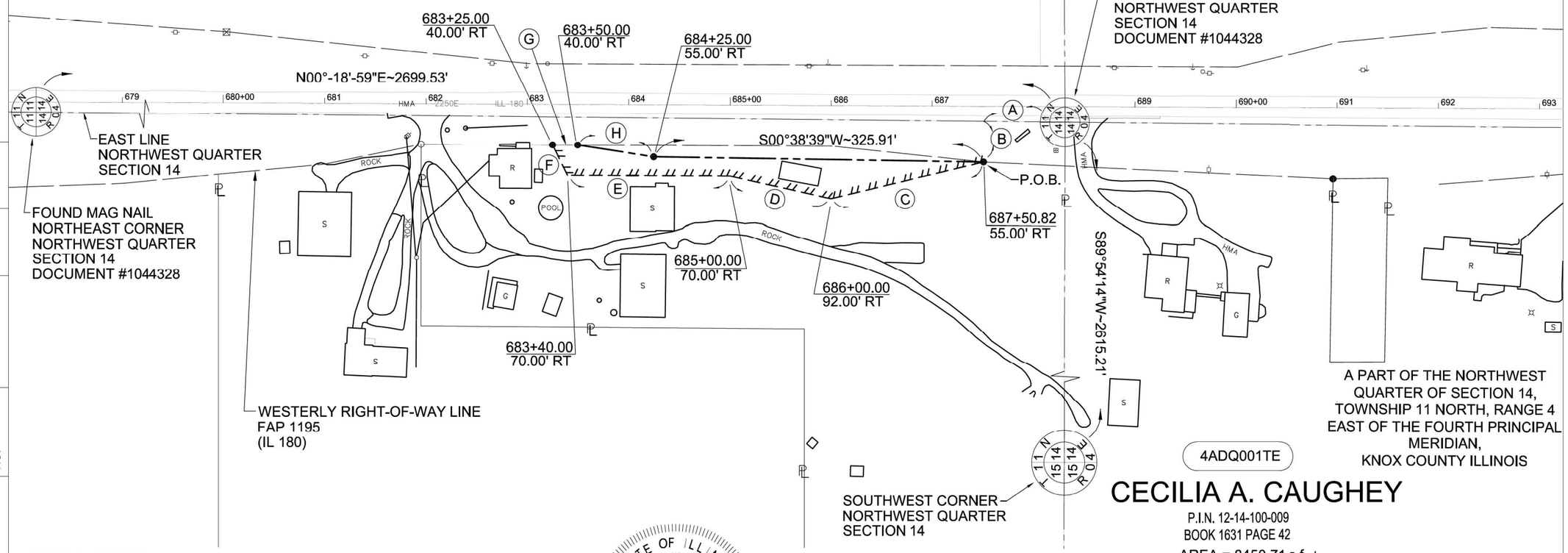

A PART OF THE NORTHWEST QUARTER OF SECTION 14, TOWNSHIP 11 NORTH, RANGE 4 EAST OF THE FOURTH PRINCIPAL MERIDIAN, KNOX COUNTY ILLINOIS

4ADQ001TE

CECILIA A. CAUGHEY

P.I.N. 12-14-100-009
BOOK 1631 PAGE 42
AREA = 8450.71 s.f. ±
OR 0.194 Acres ±

KNOX COUNTY

TEMPORARY EASEMENT PLAT

THIS IS TO CERTIFY THAT THIS IS A TRUE AND CORRECT PLAT OF SURVEY MADE UNDER MY DIRECTION FOR THE ILLINOIS DEPARTMENT OF TRANSPORTATION. THIS PROFESSIONAL SERVICE CONFORMS TO THE CURRENT ILLINOIS MINIMUM STANDARDS FOR A BOUNDARY SURVEY.

Feb. 1, 2024

DANIEL J. DRISCOLL - ILLINOIS PROFESSIONAL
LAND SURVEYOR NUMBER 35-3347
MY LICENSE EXPIRES 11/30/2024

STATE OF ILLINOIS
DANIEL J. DRISCOLL
NO. 3347
CANTON
PROFESSIONAL LAND SURVEYOR

FIELD WORK COMPLETION: August/2023

FAP ROUTE 1195 (IL 180)
SHEET 1 OF 1
SCALE: 1" = 50'
OCTOBER/2023

CONSTRUCTION SECTION: 10W-1,RS-5;(111,112,108X-1)W,RS-3
JOB NO. R-94-003-23
CATALOG NO. 035640-00

TERRA Engineering LTD
401 Main Street Suite 1560
Peoria, IL 61602
309-999-0123

IL Professional Design Firm
Number 184-003610

REVISED:

Signed Recorded BOOK PAGE
DOCUMENT NO.

4ADQ001TE

R.O.W. PLAT			
NOTE BOOK			
NO.			
	COMPUTED	DJD	Jan. 30, 2024
	CHECKED	EST	Jan. 31, 2024
	INKED	XEL	Jan. 30, 2024
	INK CHECKED	DJD	Jan. 30, 2024
	BY		DATE

CAD DRAWING:
ROW PROJECT:
FILE:

DATE PLOTTED = 12/18/2024 10:49:24 AM
PRINT TILE = 0000000.pdf
PLOT CONFIG = CGI-PDF.pltcfg
MODEL: $MODEL NAMES
FILE NAME: h:\PROJ\0021484.07\CADD\Sht\details\Plat of Highways\D468E56-Plat.dgn

CiorbaGroup
8725 W. Higgins Rd, Ste 600, Chicago, IL 60631
P 773.775.4009 | www.ciorba.com

USER NAME = Roadway	DESIGNED - AEC	REVISED -	STATE OF ILLINOIS DEPARTMENT OF TRANSPORTATION
	DRAWN - AMS	REVISED -	
PLOT SCALE = 105.0104 ' / in.	CHECKED - NDF	REVISED -	
PLOT DATE = 12/18/2024	DATE - 5/31/2024	REVISED -	

IL 180 WIDENING AND RESURFACING
PLAT OF HIGHWAYS

SCALE: SHEET OF SHEETS STA. TO STA.

F.A.S. RTE.	SECTION	COUNTY	TOTAL SHEETS	SHEET NO.
1195	*	KNOX	409	236
*	110RS-5;(111,112,108X-1)W,RS-3	CONTRACT NO. 68E50		
		ILLINOIS FED. AID PROJECT		

STATE OF ILLINOIS
DEPARTMENT OF TRANSPORTATION

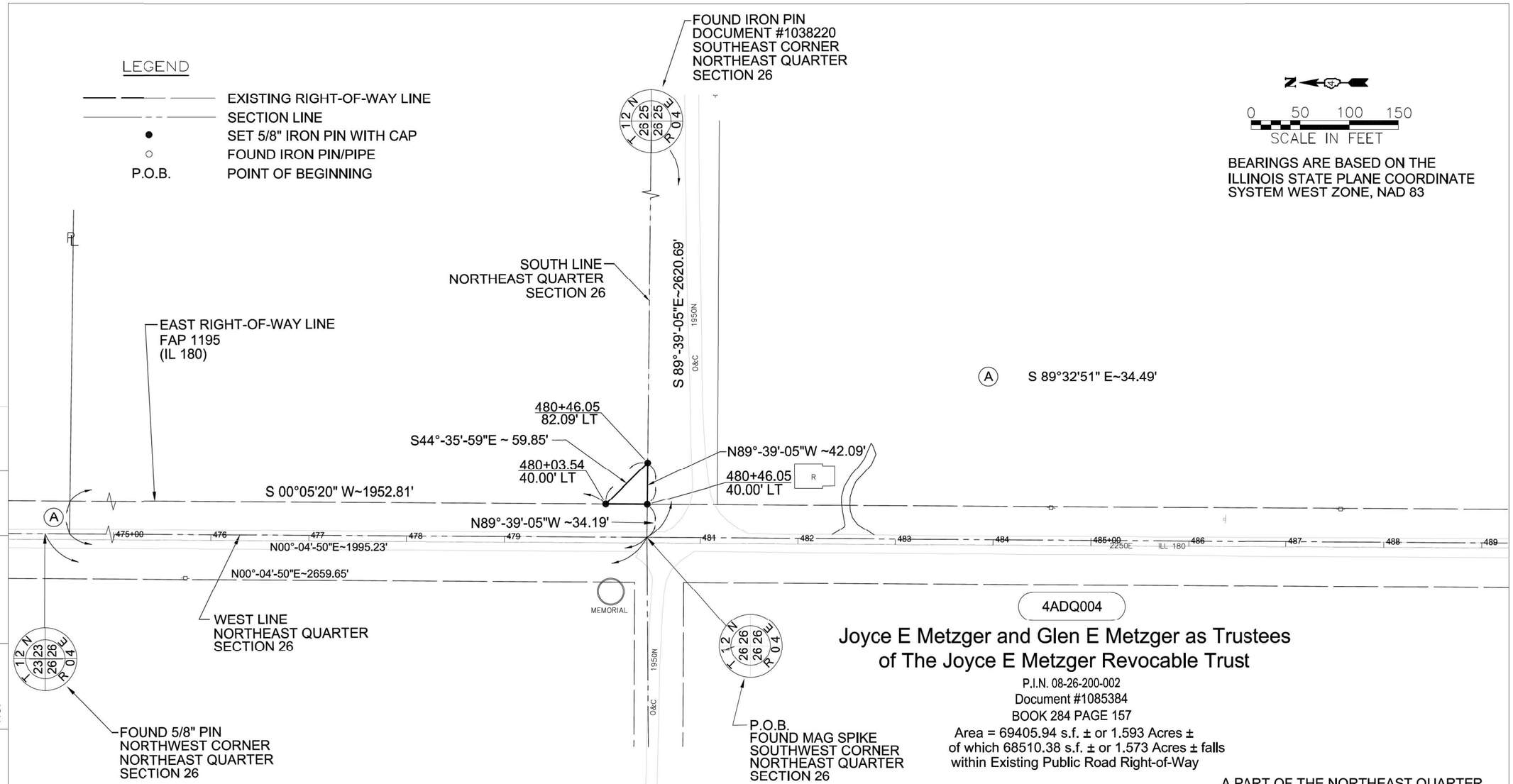

CONTRACT NO: 68E50

	BY	DATE
COMPUTED	DJD	Jan. 30, 2024
CHECKED	EST	Jan. 31, 2024
INKED	XEL	Jan. 30, 2024
INK CHECKED	DJD	Jan. 30, 2024

R.O.W. PLAT
NOTE BOOK
NO.

4ADQ004

Joyce E Metzger and Glen E Metzger as Trustees of The Joyce E Metzger Revocable Trust

P.I.N. 08-26-200-002
Document #1085384
BOOK 284 PAGE 157
Area = 69405.94 s.f. ± or 1.593 Acres ±
of which 68510.38 s.f. ± or 1.573 Acres ± falls
within Existing Public Road Right-of-Way

A PART OF THE NORTHEAST QUARTER
OF SECTION 26, TOWNSHIP 12 NORTH,
RANGE 4 EAST OF THE 4th P.M.
KNOX COUNTY, ILLINOIS

THIS IS TO CERTIFY THAT THIS IS A TRUE AND CORRECT PLAT OF SURVEY MADE UNDER MY DIRECTION FOR THE ILLINOIS DEPARTMENT OF TRANSPORTATION. THIS PROFESSIONAL SERVICE CONFORMS TO THE CURRENT ILLINOIS MINIMUM STANDARDS FOR A BOUNDARY SURVEY.

Daniel J. Driscoll

Feb. 1, 2024

DANIEL J. DRISCOLL - ILLINOIS PROFESSIONAL
LAND SURVEYOR NUMBER 35-3347
MY LICENSE EXPIRES 11/30/2024

FIELD WORK COMPLETION: August/2023

KNOX COUNTY

RIGHT OF WAY PLAT

FAP ROUTE 1195 (IL 180)
SHEET 1 OF 1
SCALE: 1" = 50'
OCTOBER 2023

CONSTRUCTION SECTION: 10W-1,RS-5;(111,112,108X-1)W,RS-3
JOB NO. R-94-003-23
CATALOG NO. 035640-00

CAD DRAWING:
ROW PROJECT:
FILE:

TERRA Engineering LTD
401 Main Street Suite 1560
Peoria, IL 61602
309-999-0123

IL Professional Design Firm
Number 184-003610

REVISED:

Signed Recorded BOOK PAGE
DOCUMENT NO.

4ADQ004

DATE PLOTTED = 12/18/2024 10:49:34 AM
DATE SAVED = 12/18/2024 10:49:27 AM
PLOT CONFIG = CGI-PDF.pltcfg
MODEL: $MODELNAMES
FILE NAME: N:\PROJ\0021484,07\CADD\ShtDetails\Rt. of Highways\D468E50-Plat.dgn

CiorbaGroup
8725 W. Higgins Rd, Ste 600, Chicago, IL 60631
P 773.775.4009 | www.ciorba.com

USER NAME = Roadway	DESIGNED - AEC	REVISED -	
	DRAWN - AMS	REVISED -	
PLOT SCALE = 105.0104 ' / in.	CHECKED - NDF	REVISED -	
PLOT DATE = 12/18/2024	DATE - 5/31/2024	REVISED -	

STATE OF ILLINOIS
DEPARTMENT OF TRANSPORTATION

IL 180 WIDENING AND RESURFACING
PLAT OF HIGHWAYS

SCALE: SHEET OF SHEETS STA. TO STA.

F.A.S. RTE.	SECTION	COUNTY	TOTAL SHEETS	SHEET NO.
1195	*	KNOX	409	239
* 110RS-5;(111,112,108X-1)W,RS-3		CONTRACT NO. 68E50		
		ILLINOIS FED. AID PROJECT		

STATE OF ILLINOIS
DEPARTMENT OF TRANSPORTATION

CONTRACT NO: 68E50

LEGEND

EXISTING RIGHT-OF-WAY LINE
TEMPORARY EASEMENT LINE
SECTION LINE
SET 5/8" IRON PIN WITH CAP
FOUND IRON PIN/PIPE
POB POINT OF BEGINNING
POC POINT OF COMMENCEMENT

N

0 50 100 150
SCALE IN FEET

BEARINGS ARE BASED ON THE ILLINOIS STATE PLANE COORDINATE SYSTEM WEST ZONE, NAD 83

(A) S00°-23'-57"E~43.93'

NORTH LINE SOUTHWEST QUARTER SECTION 14

P.O.C. FOUND $\frac{5}{8}$" PIN NORTHEAST CORNER SOUTHWEST QUARTER SECTION 14

N 89°-36'-03"W~2633.55'

N89°-36'-03"W~808.61'

T 12 N R 04 E — 15 14 / 15 14

T 12 N R 04 E — 14 14 / 14 14

361 362 363 364 365+00 366 367 368 369 370+00 371 372 373 374 375+00 376

S89°-57'-19"E~198.52'

(A) P.O.B.

CENTERLINE FAP ROUTE 1195 (IL 180)

365+50.00 40.00' RT

367+50.00 40.00' RT

SOUTHERLY RIGHT-OF-WAY LINE FAP ROUTE 1195 (IL 180)

FOUND MAG SPIKE NORTHWEST CORNER SOUTHWEST QUARTER SECTION 14

N31°-29'-41"W ~ 93.4'

S31°-44'-54"W~93.13'

366+00.00 80.00' RT

367+00.00 80.00' RT

S89°-50'-07"W~100.73'

S00°-07'-50"W~2658.84'

4ADQ005TE

TERESA A. WELCH

P.I.N. 08-14-300-002
Document #1004987
Area = 11883.18s.f
or 0.273 Acres

A PART OF THE SOUTHWEST QUARTER OF SECTION 14, TOWNSHIP 12 NORTH, RANGE 4 EAST OF THE 4th P.M. KNOX COUNTY, ILLINOIS

T 12 N R 04 E — 14 14 / 23 23

FOUND MAG NAIL DOCUMENT #701255 SOUTHEAST CORNER SOUTHWEST QUARTER SECTION 14

THIS IS TO CERTIFY THAT THIS IS A TRUE AND CORRECT PLAT OF SURVEY MADE UNDER MY DIRECTION FOR THE ILLINOIS DEPARTMENT OF TRANSPORTATION. THIS PROFESSIONAL SERVICE CONFORMS TO THE CURRENT ILLINOIS MINIMUM STANDARDS FOR A BOUNDARY SURVEY.

Daniel J. Driscoll

Feb. 1, 2024

DANIEL J. DRISCOLL - ILLINOIS PROFESSIONAL LAND SURVEYOR NUMBER 35-3347
MY LICENSE EXPIRES 11/30/2024

STATE OF ILLINOIS
DANIEL J. DRISCOLL
NO. 3347
CANTON
PROFESSIONAL LAND SURVEYOR

FIELD WORK COMPLETION: August/2023

KNOX COUNTY

TEMPORARY EASEMENT PLAT

FAP ROUTE 1195 (IL 180)
SHEET 1 OF 1
SCALE: 1" = 50'
OCTOBER 2023

CONSTRUCTION SECTION: 10W-1,RS-5;(111,112,108X-1)W,RS-3
JOB NO. R-94-003-23
CATALOG NO. 035640-00

	BY	DATE
COMPUTED	DJD	Jan. 30, 2024
CHECKED	EST	Jan. 31, 2024
INKED	XEL	Jan. 30, 2024
INK CHECKED	DJD	Jan. 30, 2024

R.O.W. PLAT
NOTE BOOK
NO.

CAD DRAWING:
ROW PROJECT:
FILE:

TERRA Engineering LTD
401 Main Street Suite 1560
Peoria, IL 61602
309-999-0123

IL Professional Design Firm
Number 184-003610

REVISED:

Signed Recorded BOOK DOCUMENT NO. PAGE

4ADQ005TE

CiorbaGroup
8725 W. Higgins Rd, Ste 600, Chicago, IL 60631
P 773.775.4009 | www.ciorba.com

USER NAME = Roadway	DESIGNED - AEC	REVISED -	
	DRAWN - AMS	REVISED -	
PLOT SCALE = 105.0104 ' / in.	CHECKED - NDF	REVISED -	
PLOT DATE = 12/18/2024	DATE - 5/31/2024	REVISED -	

STATE OF ILLINOIS
DEPARTMENT OF TRANSPORTATION

IL 180 WIDENING AND RESURFACING
PLAT OF HIGHWAYS

SCALE: SHEET OF SHEETS STA. TO STA.

F.A.S. RTE.	SECTION	COUNTY	TOTAL SHEETS	SHEET NO.
1195	*	KNOX	409	240
* 110RS-5;(111,112,108X-1)W,RS-3		CONTRACT NO. 68E50		
		ILLINOIS FED. AID PROJECT		

DATE PLOTTED = 12/18/2024 10:49:43 AM
PLOT SCALE = 0.0104 ' / in.
PLOT CONFIG = CGI-PDF.pltcfg
MODEL: $MODEL NAMES
FILE NAME: N:\PROJ\002148A.07\CADD\SHTDetails\Plat of Highways\D468E50-Rbt.dgn

STATE OF ILLINOIS
DEPARTMENT OF TRANSPORTATION

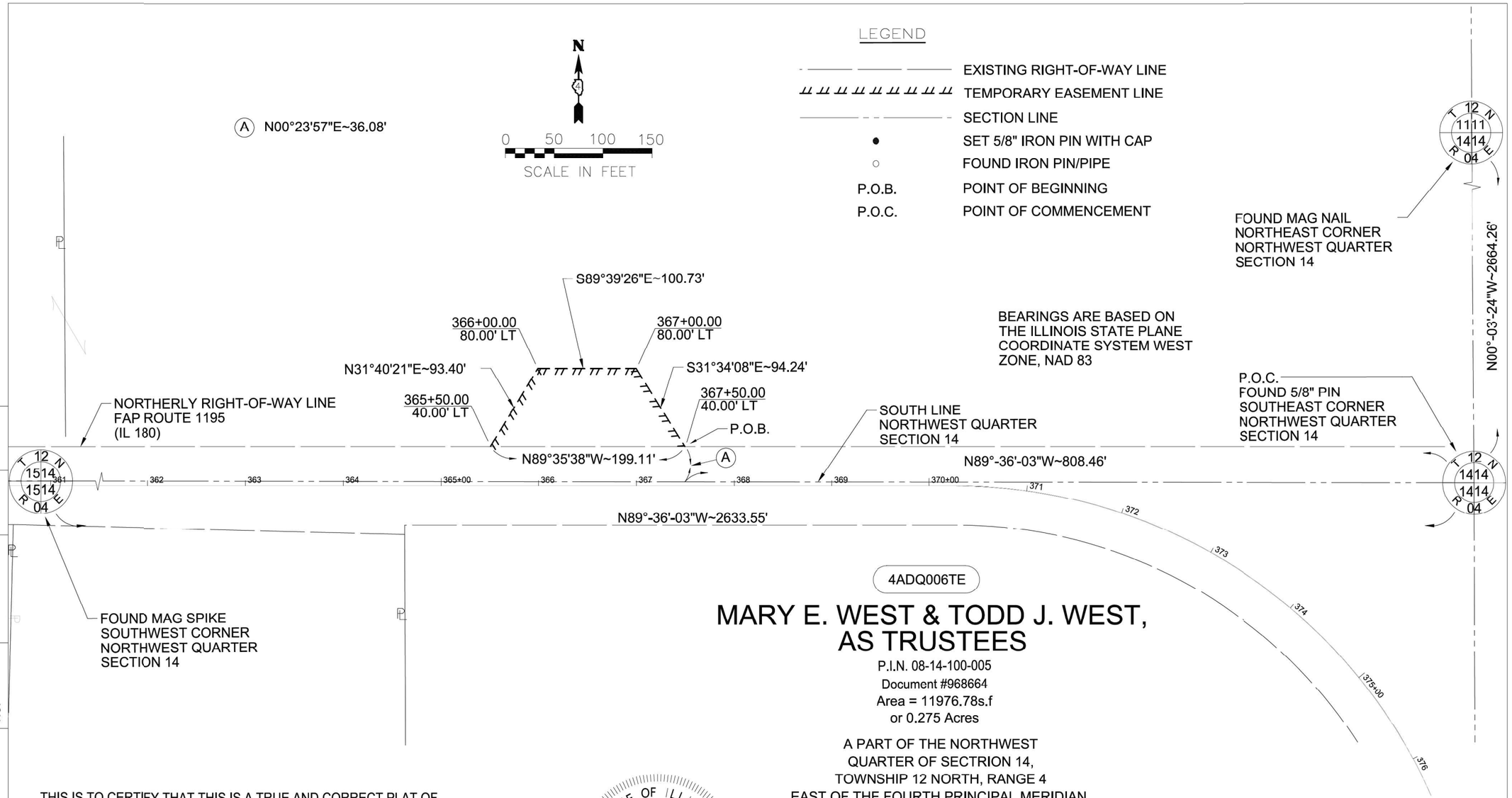

CONTRACT NO: 68E50

		BY	DATE
	COMPUTED	DJD	Jan. 30, 2024
	CHECKED	EST	Jan. 31, 2024
	INKED	XEL	Jan. 30, 2024
	INK CHECKED	DJD	Jan. 30, 2024

R.O.W. PLAT

NOTE BOOK

NO.

4ADQ006TE

MARY E. WEST & TODD J. WEST, AS TRUSTEES

P.I.N. 08-14-100-005
Document #968664
Area = 11976.78s.f
or 0.275 Acres

A PART OF THE NORTHWEST
QUARTER OF SECTRION 14,
TOWNSHIP 12 NORTH, RANGE 4
EAST OF THE FOURTH PRINCIPAL MERIDIAN,
KNOX COUNTY ILLINOIS

THIS IS TO CERTIFY THAT THIS IS A TRUE AND CORRECT PLAT OF SURVEY MADE UNDER MY DIRECTION FOR THE ILLINOIS DEPARTMENT OF TRANSPORTATION. THIS PROFESSIONAL SERVICE CONFORMS TO THE CURRENT ILLINOIS MINIMUM STANDARDS FOR A BOUNDARY SURVEY.

Daniel J. Driscoll

Feb. 1, 2024

DANIEL J. DRISCOLL - ILLINOIS PROFESSIONAL
LAND SURVEYOR NUMBER 35-3347
MY LICENSE EXPIRES 11/30/2024

STATE OF ILLINOIS
DANIEL J. DRISCOLL
NO. 3347
CANTON
PROFESSIONAL LAND SURVEYOR

FIELD WORK COMPLETION: AUGUST/2023

KNOX COUNTY

TEMPORARY EASEMENT PLAT

FAP ROUTE 1195 (IL 180)
SHEET 1 OF 1
SCALE: 1" = 50'
OCTOBER 2023

CONSTRUCTION SECTION: 10W-1,RS-5;(111,112,108X-1)W,RS-3
JOB NO. R-94-003-23
CATALOG NO. 035640-00

CAD DRAWING:
ROW PROJECT:
FILE:

TERRA Engineering LTD
401 Main Street Suite 1560
Peoria, IL 61602
309-999-0123

IL Professional Design Firm
Number 184-003610

REVISED:

Signed Recorded BOOK PAGE
DOCUMENT NO.

4ADQ006TE

DATE PLOTTED = 12/18/2024 10:49:54 AM
PNL PLOT SCALE = 20.0000 (in)
PLOT CONFIG = CGI-PDF.pltcfg
MODEL: $MODELNAMES
FILE NAME: N:\PROJ\002\1484.07\CADD\ShtDetails\Plat of Highways\0468E50-Plats.dgn

CiorbaGroup
8725 W. Higgins Rd, Ste 600, Chicago, IL 60631
P 773.775.4009 | www.ciorba.com

USER NAME = Roadway	DESIGNED - AEC	REVISED -	
	DRAWN - AMS	REVISED -	
PLOT SCALE = 105.0104 ' / in.	CHECKED - NDF	REVISED -	
PLOT DATE = 12/18/2024	DATE - 5/31/2024	REVISED -	

STATE OF ILLINOIS
DEPARTMENT OF TRANSPORTATION

IL 180 WIDENING AND RESURFACING
PLAT OF HIGHWAYS

SCALE: SHEET OF SHEETS STA. TO STA.

F.A.S. RTE.	SECTION	COUNTY	TOTAL SHEETS	SHEET NO.
1195	*	KNOX	409	241
*	110RS-5;(111,112,108X-1)W,RS-3	CONTRACT NO. 68E50		
		ILLINOIS FED. AID PROJECT		

STATE OF ILLINOIS
DEPARTMENT OF TRANSPORTATION

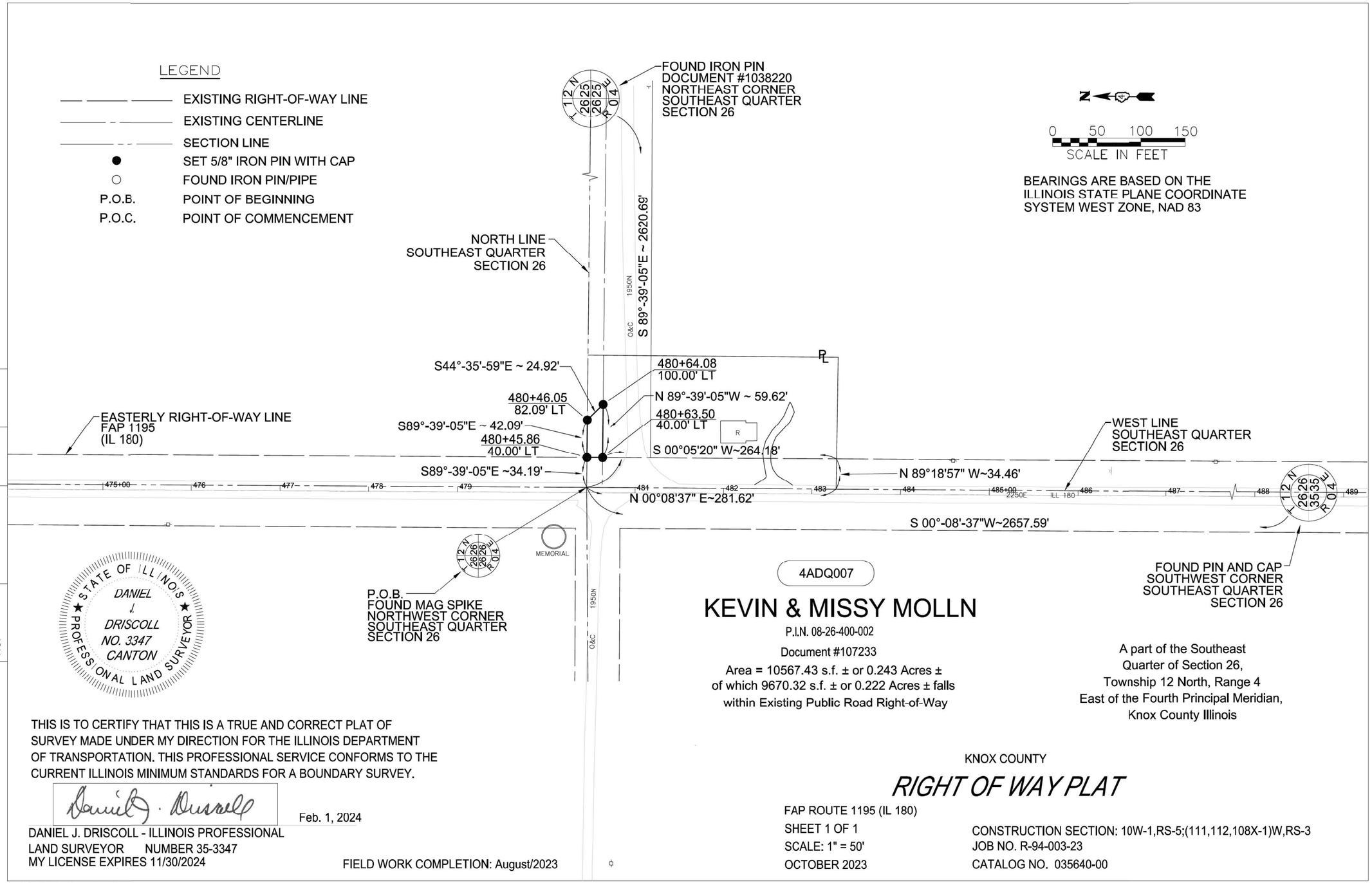

THIS IS TO CERTIFY THAT THIS IS A TRUE AND CORRECT PLAT OF SURVEY MADE UNDER MY DIRECTION FOR THE ILLINOIS DEPARTMENT OF TRANSPORTATION. THIS PROFESSIONAL SERVICE CONFORMS TO THE CURRENT ILLINOIS MINIMUM STANDARDS FOR A BOUNDARY SURVEY.

Feb. 1, 2024

DANIEL J. DRISCOLL - ILLINOIS PROFESSIONAL
LAND SURVEYOR NUMBER 35-3347
MY LICENSE EXPIRES 11/30/2024

FIELD WORK COMPLETION: August/2023

KNOX COUNTY

RIGHT OF WAY PLAT

FAP ROUTE 1195 (IL 180)
SHEET 1 OF 1
SCALE: 1" = 50'
OCTOBER 2023

CONSTRUCTION SECTION: 10W-1,RS-5;(111,112,108X-1)W,RS-3
JOB NO. R-94-003-23
CATALOG NO. 035640-00

CONTRACT NO: 68E50

	BY	DATE
COMPUTED	DJD	Jan. 30, 2024
CHECKED	EST	Jan. 31, 2024
INKED	XEL	Jan. 30, 2024
INK CHECKED	DJD	Jan. 30, 2024

R.O.W. PLAT
NOTE BOOK
NO.

CAD DRAWING:
ROW PROJECT:
FILE:

TERRA Engineering LTD
401 Main Street Suite 1560
Peoria, IL 61602
309-999-0123

IL Professional Design Firm
Number 184-003610

REVISED:

Signed Recorded BOOK PAGE
DOCUMENT NO.

4ADQ007

DATE PLOTTED = 12/18/2024 10:50:07 AM
PAGE SIZE = 22.00 x 34.00 (in)
PLOT CONFIG = CGI-PDF.pltcfg
MODEL SMODELNAME
FILE NAME: N:\PROJ\0021484.07\CADD\SnbDetailsPlat of Highways\0468E50-Plat.dgn

CiorbaGroup
8725 W. Higgins Rd, Ste 600, Chicago, IL 60631
P 773.775.4009 | www.ciorba.com

USER NAME = Roadway	DESIGNED - AEC	REVISED -	
	DRAWN - AMS	REVISED -	
PLOT SCALE = 105.0104 ' / in.	CHECKED - NDF	REVISED -	
PLOT DATE = 12/18/2024	DATE - 5/31/2024	REVISED -	

STATE OF ILLINOIS
DEPARTMENT OF TRANSPORTATION

IL 180 WIDENING AND RESURFACING
PLAT OF HIGHWAYS

SCALE: SHEET OF SHEETS STA. TO STA.

F.A.S. RTE.	SECTION	COUNTY	TOTAL SHEETS	SHEET NO.
1195	*	KNOX	409	242
* 110RS-5;(111,112,108X-1)W,RS-3		CONTRACT NO. 68E50		
		ILLINOIS FED. AID PROJECT		

HALF EX. ELEVATION

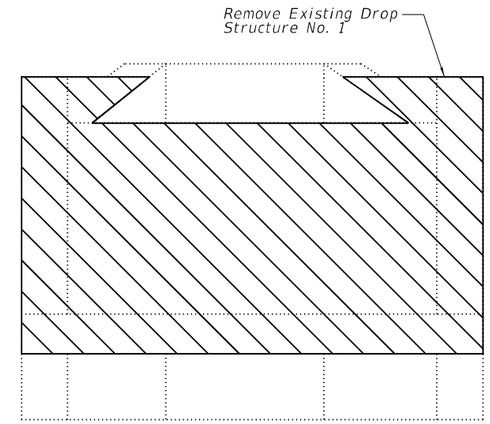

VIEW A-A

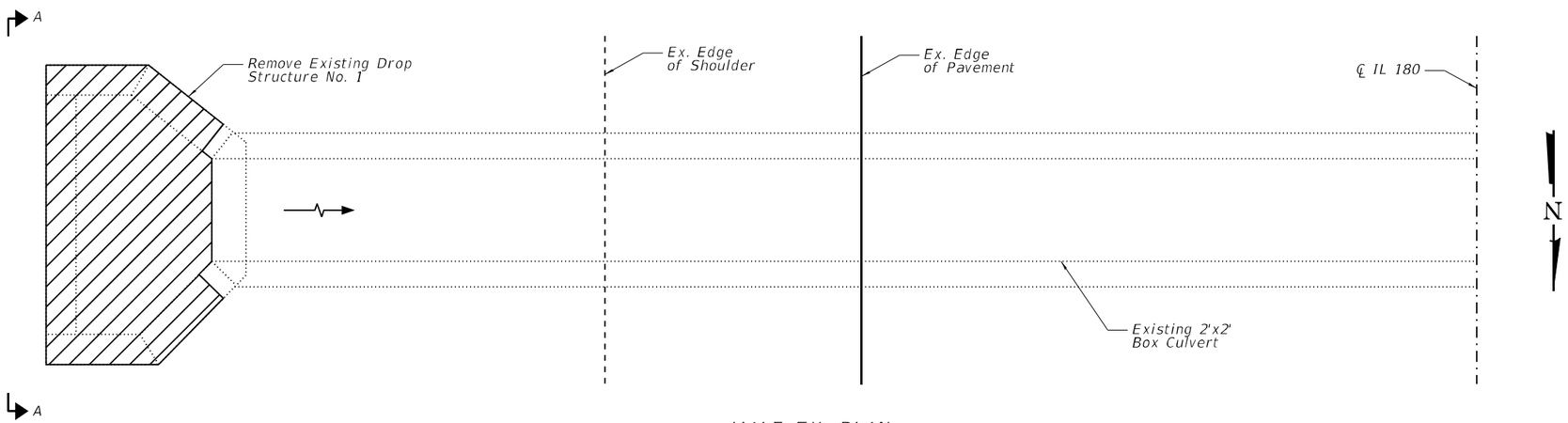

HALF EX. PLAN

GENERAL NOTES

Plan dimensions and details relative to existing plans are subject to nominal construction variations. The Contractor shall field verify existing dimensions and details prior to construction or ordering of materials. Such variations shall not be cause for additional compensation for a change in scope of the work, however, the Contractor will be paid for the quantity actually furnished at the unit price bid for the work.

Reinforcement bars designated (E) shall be epoxy coated.

Existing reinforcement bars extending into the reconstruction area shall be cleaned, straightened and incorportated into the new construction. Any reinforcement bars that are damaged during concrete removal shall be replaced with an approved bar splicer or anchorage system. Cost included with Reinforcement Bars, Epoxy Coated.

All new reinforcement bars shall be spaced appropriately to miss existing reinforcement bars.

Cost of drilling and epoxy grouting new reinforcement bars into existing concrete is included with Reinforcement Bars, Epoxy Coated. Drill and epoxy grout bars into existing concrete according to Article 584 of the Standard Specifications.

Removal of Existing Structures No. 1

TOTAL BILL OF MATERIAL

ITEM	UNIT	TOTAL
Removal of Existing Structures No. 1	Each	1
Concrete Structures	Cu. Yd.	1.2
Reinforcement Bars, Epoxy Coated	Pound	110
Granular Backfill for Structures	Cu. Yd.	3.3

MODEL: SHEET
FILE NAME: pw:\\terraeng-pw.bentley.com:terraeng-pw-01\Documents\Projects\2023\23-238-007 D4 Clorba IL 180\Design\100 - Drawings\CADD\Sheets\D468E50-SHT-CRP-28210-1of2-TRA.dgn

DESIGNED - ____	EXAMINED ENGINEER OF BRIDGE DESIGN	DATE - ____	STATE OF ILLINOIS DEPARTMENT OF TRANSPORTATION
CHECKED - ____			
DRAWN - ____	PASSED ENGINEER OF BRIDGES AND STRUCTURES	REVISED - ____	
CHECKED - ____		REVISED - ____	

12/18/2024 10:20:16 AM

CULVERT DROP BOX REPLACEMENT
STA. 282+10.00
SHEET 1 OF 2 SHEETS

F.A.S. RTE.	SECTION	COUNTY	TOTAL SHEETS	SHEET NO.
1195	*	KNOX	409	243
		CONTRACT NO. 68E50		
		ILLINOIS	FED. AID PROJECT	

*110RS-5:(111,112,108X-1)W,RS-3

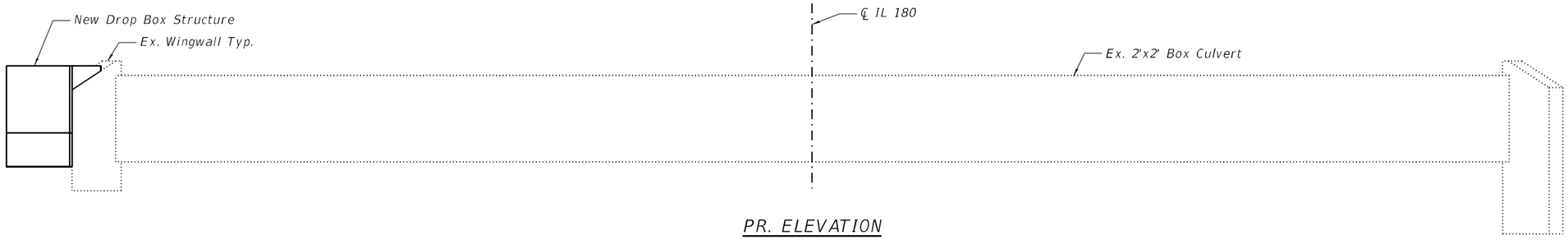

PR. ELEVATION

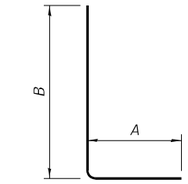

BARS h5(E), h6(E) AND v(E) THRU v2(E)

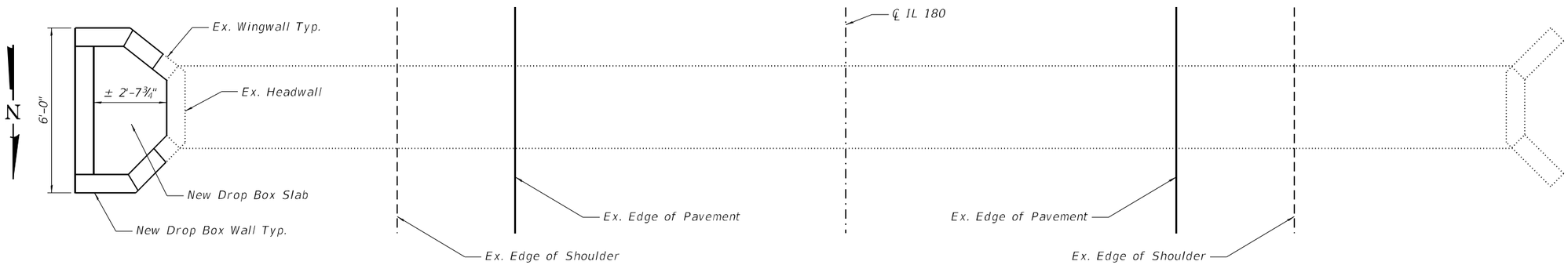

PR. PLAN

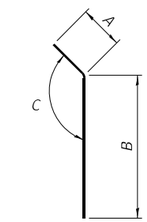

BARS h(E), h1(E), h3(E) AND h4(E)

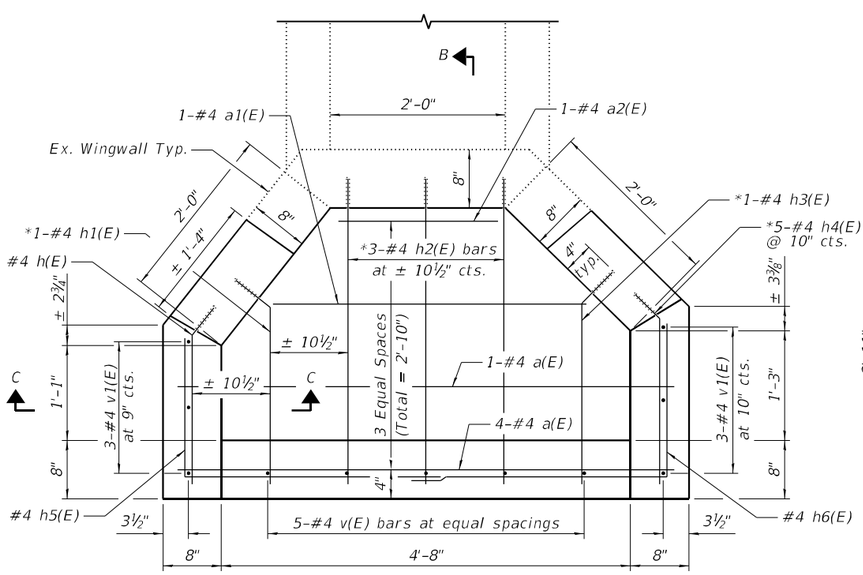

PLAN OF PR. DROP BOX STRUCTURE

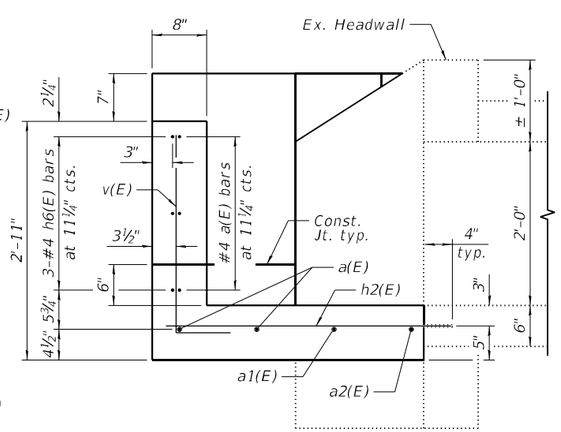

SECTION B-B

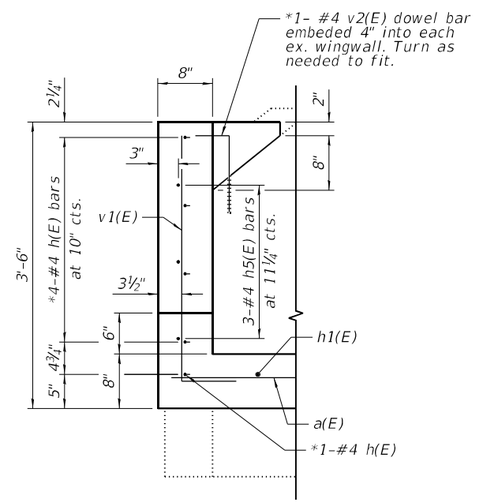

SECTION C-C

* Drill and epoxy grout into existing concrete

BILL OF BARS

Bar	No.	Size	Length	Shape
a(E)	5	#4	5'-8"	
a1(E)	1	#4	3'-6"	
a2(E)	1	#4	1'-10"	
h(E)	5	#4	2'-1"	
h1(E)	1	#4	2'-6"	
h2(E)	3	#4	3'-6"	
h3(E)	1	#4	2'-7"	
h4(E)	5	#4	2'-3"	
h5(E)	3	#4	4'-6"	
h6(E)	3	#4	4'-8"	
v(E)	5	#4	3'-1"	
v1(E)	6	#4	3'-8"	
v2(E)	2	#4	1'-6"	

Bar	A	B	C
h(E)	6"	1'-7"	141°37'
h1(E)	6"	2'-0"	128°23'
h3(E)	6"	2'-1"	135°32'
h4(E)	6"	1'-9"	134°28'
h5(E)	1'-7"	2'-11"	-
h6(E)	1'-9"	2'-11"	-
v(E)	8"	2'-5"	-
v1(E)	8"	3'-0"	-
v2(E)	8"	10"	-

MODEL: GPE SHT
FILE NAME: pw:\\terraeng-pw.bentley.com:terraeng-pw-01\Documents\Projects\2023\23-238-007 D4 Clorba IL 180\Design\100 - Drawings\CADD\Sheets\D468E50-SHT-CRP-28210-2of2-TRA.dgn

DESIGNED -	EXAMINED	DATE -	
CHECKED -	ENGINEER OF BRIDGE DESIGN		
DRAWN -	PASSED	REVISED -	
CHECKED -	ENGINEER OF BRIDGES AND STRUCTURES	REVISED -	

STATE OF ILLINOIS
DEPARTMENT OF TRANSPORTATION

CULVERT DROP BOX REPLACEMENT
STA. 282+10.00

SHEET 2 OF 2 SHEETS

F.A.S. RTE.	SECTION	COUNTY	TOTAL SHEETS	SHEET NO.
1195	*	KNOX	409	244

CONTRACT NO. 68E50

ILLINOIS | FED. AID PROJECT

12/18/2024 10:20:20 AM

*110RS-5:(111,112,108X-1)W,RS-3

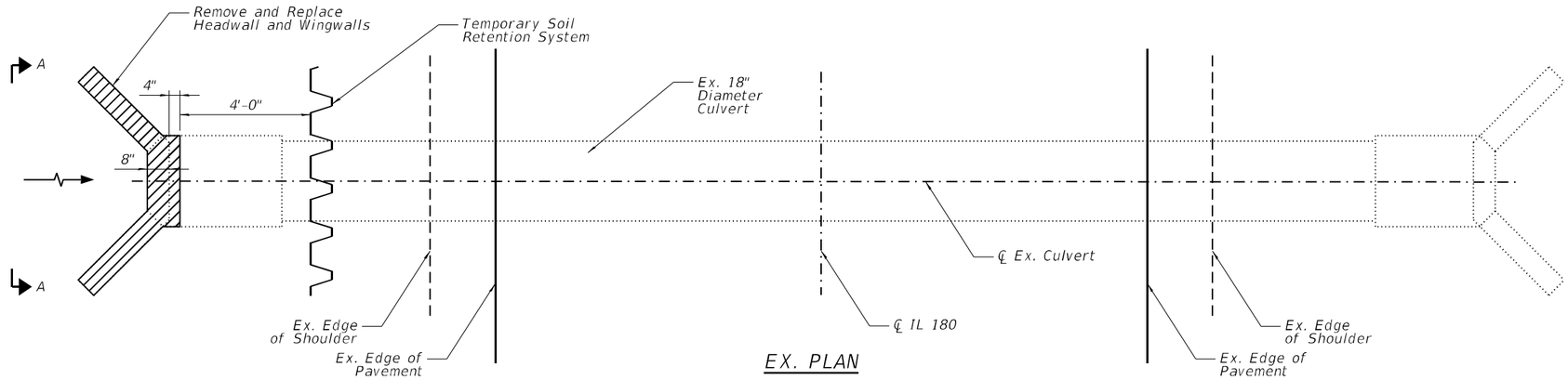

EX. PLAN

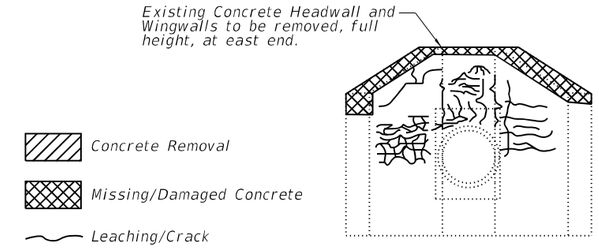

VIEW A-A

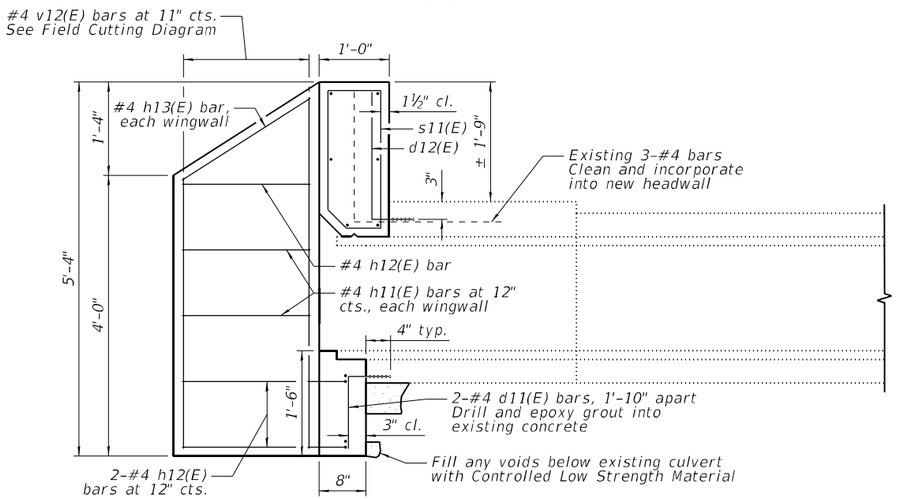

LONGITUDINAL SECTION

N

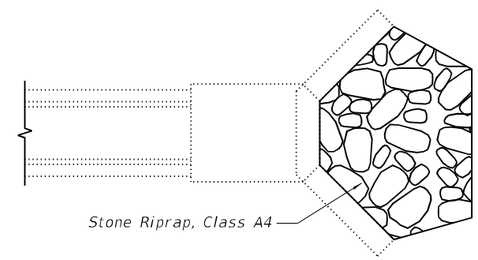

PR. PARTIAL PLAN

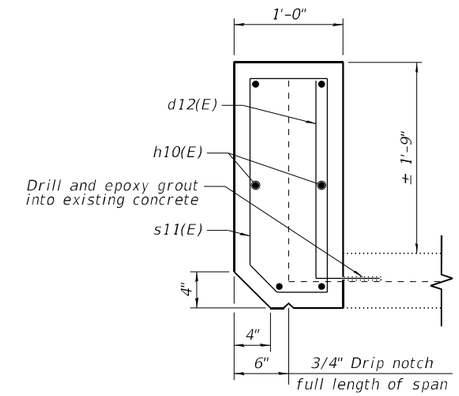

SECTION D-D

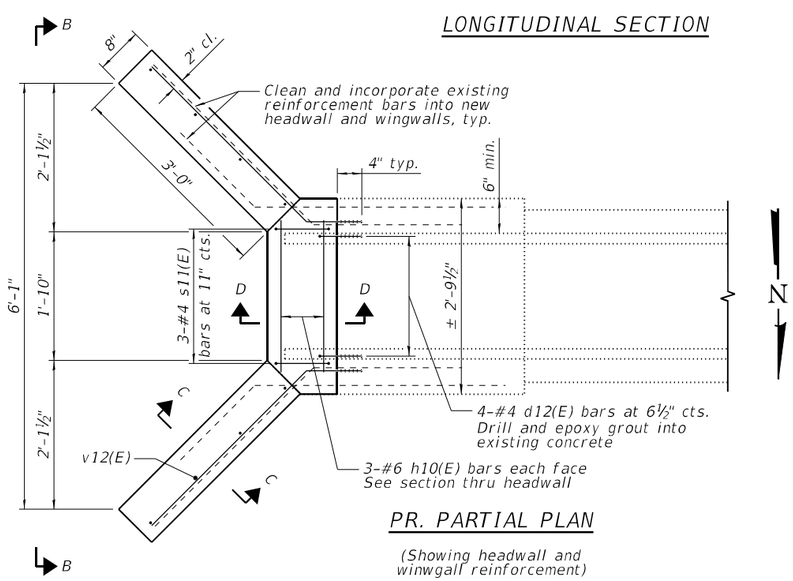

PR. PARTIAL PLAN

(Showing headwall and
winwgall reinforcement)

N

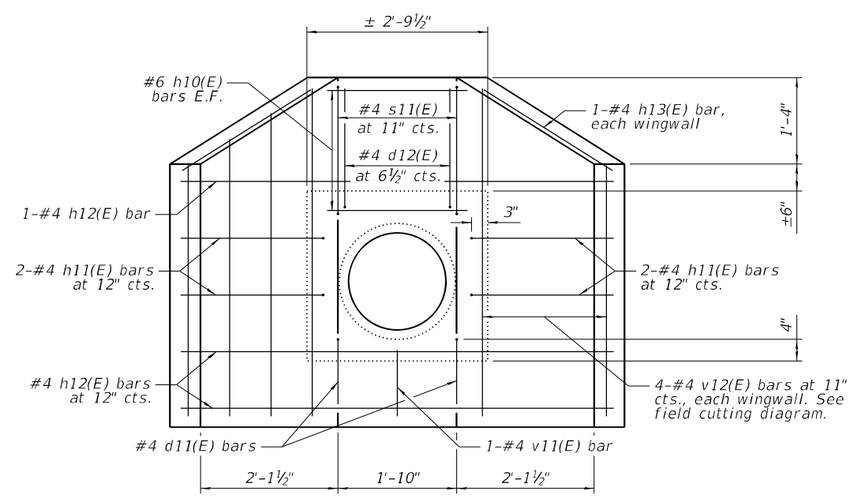

SECTION B-B

(Existing reinforcement, to be cleaned
and incorporated, not shown for clarity)

GENERAL NOTES

Plan dimensions and details relative to existing plans are subject to nominal construction variations. The Contractor shall field verify existing dimensions and details prior to construction or ordering of materials. Such variations shall not be cause for additional compensation for a change in scope of the work, however, the Contractor will be paid for the quantity actually furnished at the unit price bid for the work.

Reinforcement bars designated (E) shall be epoxy coated.

Existing reinforcement bars extending into the repair area shall be cleaned, straightened and incorporated into the new construction if bars are found to be in good condition. If existing reinforcement bars that extend into the repair area are found to be damaged, Contractor shall cut the bars flush with the face of existing concrete. Any reinforcement bars that are damaged during concrete removal shall be replaced with an approved bar splicer or anchorage system. Cost included with Reinforcement Bars, Epoxy Coated.

Drilling and epoxy grouting reinforcing bars into existing concrete shall be in accordance with Art. 584 of the Standard Specifications. Cost for drilling and epoxy grouting reinforcement bars into existing concrete is included with Reinforcement Bars, Epoxy Coated.

All new reinforcement bars shall be spaced appropriately to miss existing reinforcement bars.

TOTAL BILL OF MATERIAL

ITEM	UNIT	TOTAL
Concrete Removal	Cu. Yd.	1.1
Stone Riprap, Class A4	Sq. Yd.	4.1
Filter Fabric	Sq. Yd.	4.1
Structure Excavation	Cu. Yd.	7.0
Concrete Structures	Cu. Yd.	1.1
Reinforcement Bars, Epoxy Coated	Pound	100
Granular Backfill for Structures	Cu. Yd.	2.8
Pipe Culverts to be Cleaned 18"	Foot	41
Temporary Soil Retention System	Sq. Ft.	73
Controlled Low Strength Material	Cu. Yd.	0.5

MODEL: GPE SHT
FILE NAME: pw:\\terraeng-pw.bentley.com:terraeng-pw-01\Documents\Projects\2023\23-238-007 D4 Clorba IL 180\Design\100 - Drawings\CADD\Sheets\D468E50-SHT-CRP-31298-1of2-TRA.dgn

DESIGNED -	EXAMINED	DATE -	
CHECKED -	ENGINEER OF BRIDGE DESIGN		
DRAWN -	PASSED	REVISED -	
CHECKED -	ENGINEER OF BRIDGES AND STRUCTURES	REVISED -	

STATE OF ILLINOIS
DEPARTMENT OF TRANSPORTATION

CULVERT REPAIRS
STA. 312 + 98.00
SHEET 1 OF 2 SHEETS

F.A.S. RTE.	SECTION	COUNTY	TOTAL SHEETS	SHEET NO.
1195	*	KNOX	409	245

CONTRACT NO. 68E50
ILLINOIS | FED. AID PROJECT

12/18/2024 10:20:28 AM

*110RS-5:(111,112,108X-1)W,RS-3

BILL OF BARS

Bar	No.	Size	Length	Shape
d11(E)	2	#4	1'-7"	
d12(E)	4	#4	2'-5"	
h10(E)	6	#6	2'-2"	
h11(E)	4	#4	3'-11"	
h12(E)	3	#4	8'-4"	
h13(E)	2	#4	2'-11"	
s11(E)	3	#4	6'-2"	
v11(E)	1	#4	1'-2"	
v12(E)	4	#4	8'-8"	

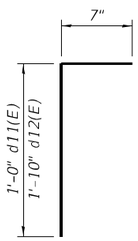

BARS d11(E) AND d12(E)

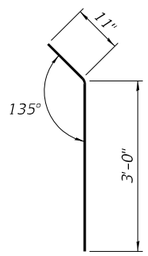

BAR h11(E)

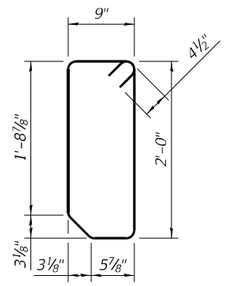

BAR s11(E)

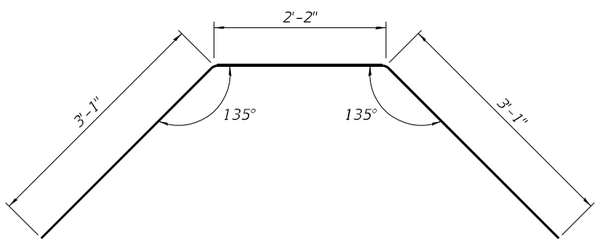

BAR h12(E)

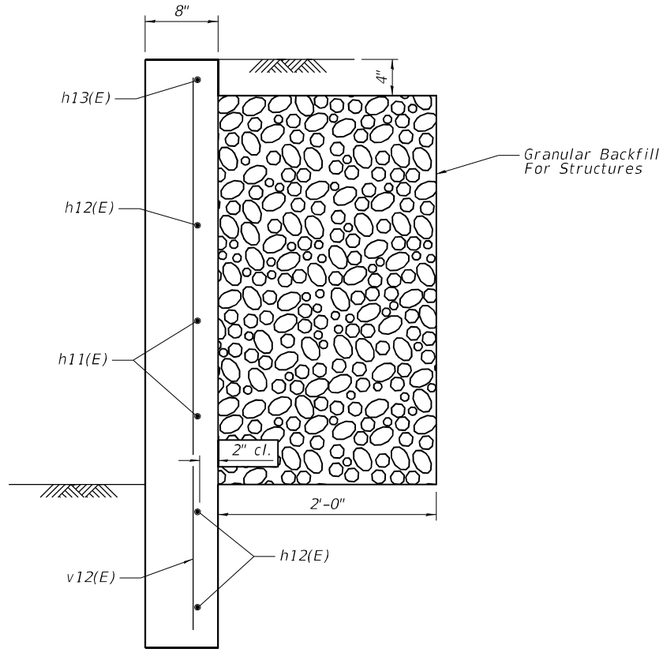

SECTION C-C

(Existing reinforcement, to be cleaned and incorporated, not shown for clarity)

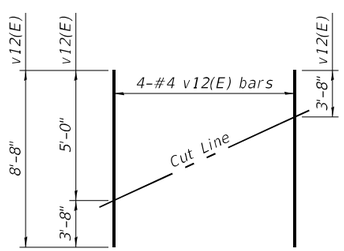

FIELD CUTTING DIAGRAM

Order v12(E) full length. Cut as shown and use remainder of bars in opposite wing.

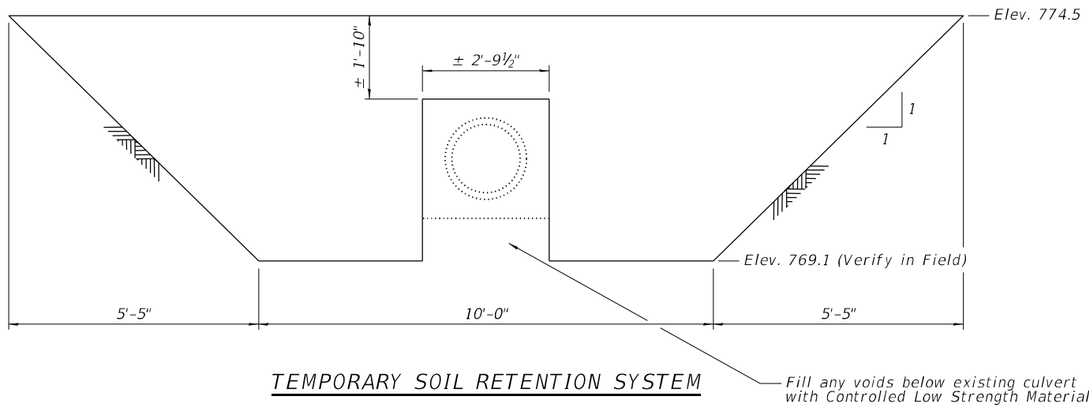

TEMPORARY SOIL RETENTION SYSTEM

Contractor shall provide design submittal including plans and detailed calculations for review and acceptance by the Engineer. Elevations shown for Temporary Soil Retention System have been estimated based on the information available during design. Contractor shall field verify all elevations.

MODEL: GPE SHT
FILE NAME: pw:\\terraeng-pw.bentley.com:terraeng-pw-01\Documents\Projects\2023\23-238-007 D4 Ciorba IL 180\Design\100 - Drawings\CADD\Sheets\D468E50-SHT-CRP-31298-2of2-TRA.dgn

DESIGNED -	EXAMINED	DATE -	
CHECKED -	ENGINEER OF BRIDGE DESIGN		
DRAWN -	PASSED	REVISED -	
CHECKED -	ENGINEER OF BRIDGES AND STRUCTURES	REVISED -	

STATE OF ILLINOIS
DEPARTMENT OF TRANSPORTATION

CULVERT REPAIRS
STA. 312 + 98.00

SHEET 2 OF 2 SHEETS

F.A.S. RTE.	SECTION	COUNTY	TOTAL SHEETS	SHEET NO.
1195	*	KNOX	409	246

CONTRACT NO. 68E50

ILLINOIS | FED. AID PROJECT

12/18/2024 10:20:32 AM

*110RS-5:(111,112,108X-1)W,RS-3

HALF ELEVATION

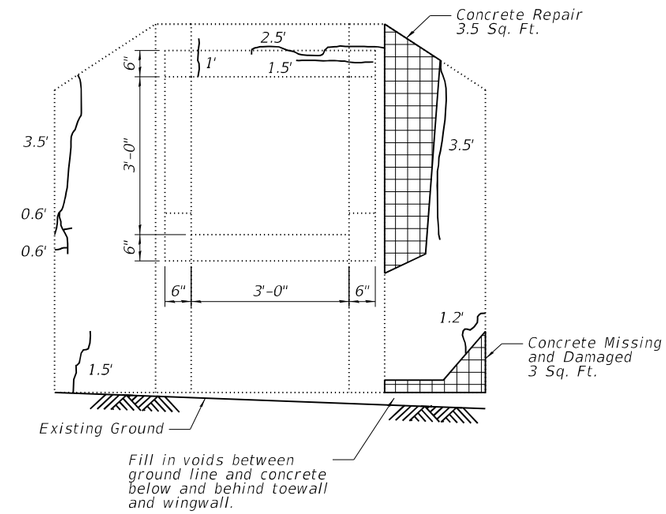

VIEW A-A

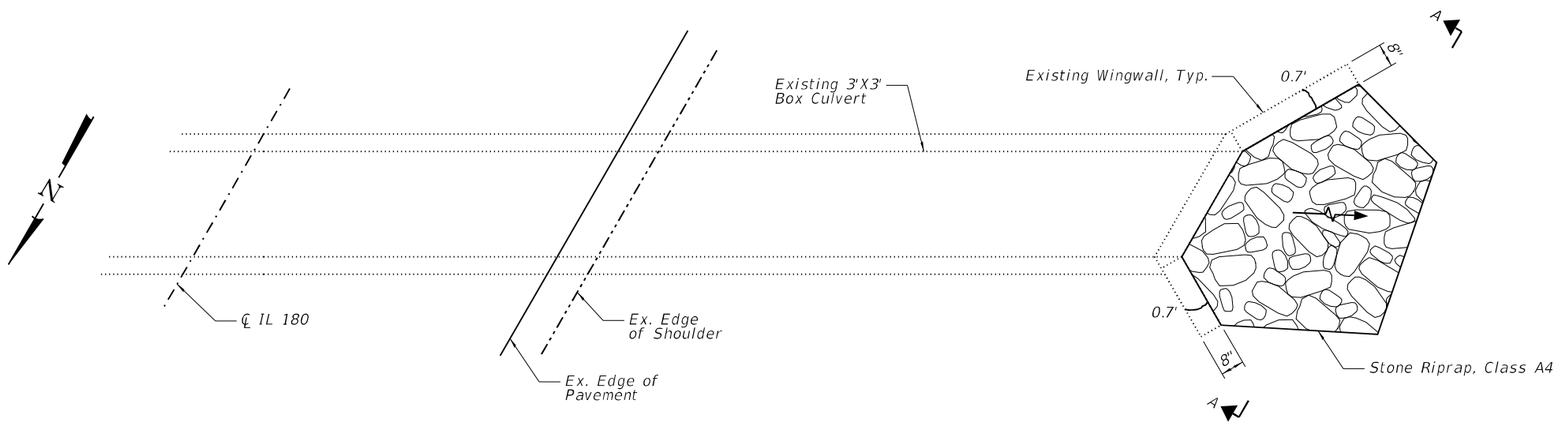

HALF PLAN

Concrete Removal

Concrete Repair

Leaching/Crack

TOTAL BILL OF MATERIAL

ITEM	UNIT	TOTAL
Stone Riprap, Class A4	Sq. Yd.	21.1
Filter Fabric	Sq. Yd.	21.1
Structural Repair of Concrete (Depth Equal to or Less Than 5 Inches)	Sq. Ft.	3.5
Epoxy Crack Injection	Foot	22
Structural Repair of Concrete (Depth Greater Than 5 Inches)	Sq. Ft.	3
Controlled Low Strength Material	Cu. Yd.	0.6

GENERAL NOTES

Plan dimensions and details relative to existing plans are subject to nominal construction variations. The Contractor shall field verify existing dimensions and details prior to construction or ordering of materials. Such variations shall not be cause for additional compensation for a change in scope of the work, however, the Contractor will be paid for the quantity actually furnished at the unit price bid for the work.

Existing reinforcement bars extending into the repair area shall be cleaned, straightened and incorporated into the new construction. Any reinforcement bars that are damaged during concrete removal shall be replaced with an approved bar splicer or anchorage system. Cost included with Structural Repair of Concrete.

MODEL: GPE SHT
FILE NAME: pw:\\terraeng-pw.bentley.com:terraeng-pw-01\Documents\Projects\2023\23-238-007 D4 Ciorba IL 180\Design\100 - Drawings\CADD\Sheets\D468E50-SHT-CRP-52398-TRA.dgn

DESIGNED -	EXAMINED	DATE - 2024/05/14	
CHECKED -	ENGINEER OF BRIDGE DESIGN		
DRAWN -	PASSED	REVISED -	
CHECKED -	ENGINEER OF BRIDGES AND STRUCTURES	REVISED -	

12/18/2024 10:20:36 AM

STATE OF ILLINOIS
DEPARTMENT OF TRANSPORTATION

CULVERT REPAIRS
STA. 523 + 98.00

SHEET OF SHEETS

F.A.S. RTE.	SECTION	COUNTY	TOTAL SHEETS	SHEET NO.
1195	-	KNOX	409	247
		CONTRACT NO. 68E50		
		ILLINOIS	FED. AID PROJECT	

*110RS-5:(111,112,108X-1)W,RS-3

Concrete Removal

Repair Concrete

Leaching/Crack

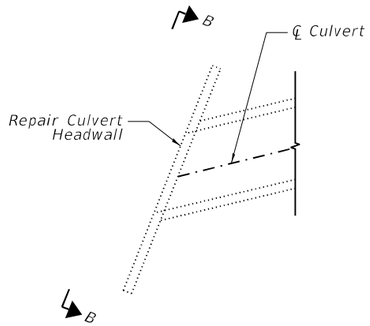

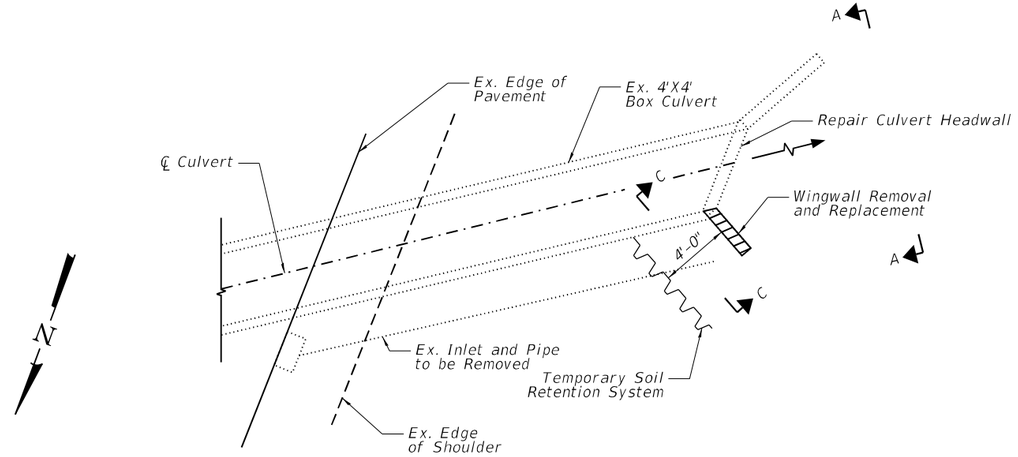

EX. PLAN

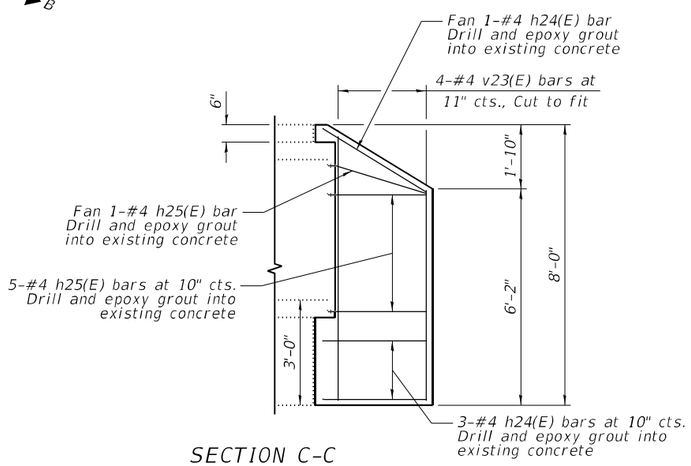

SECTION C-C

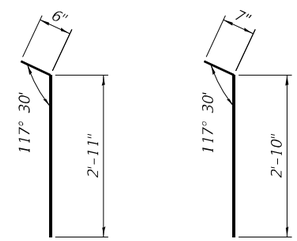

BAR h24(E) BAR h25(E)

BILL OF BARS

Bar	No.	Size	Length	Shape
h24(E)	4	#4	3'-5"	
h25(E)	6	#4	3'-5"	
v23(E)	4	#4	7'-5"	

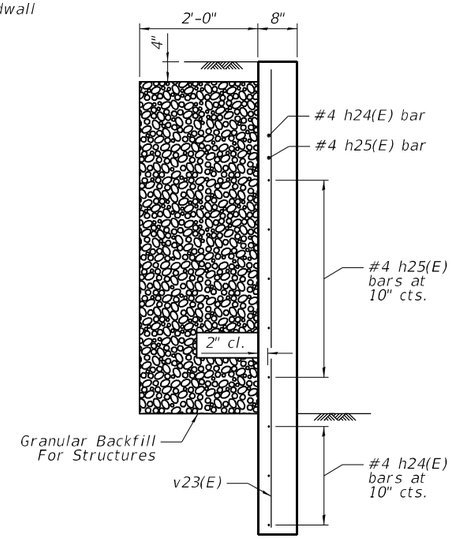

SECTION D-D

(Existing reinforcement, to be cleaned and incorporated, not shown for clarity)

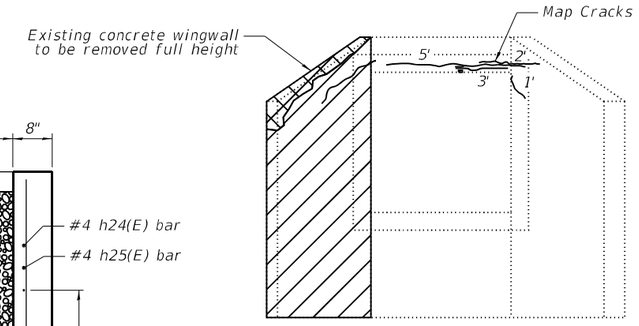

VIEW A-A

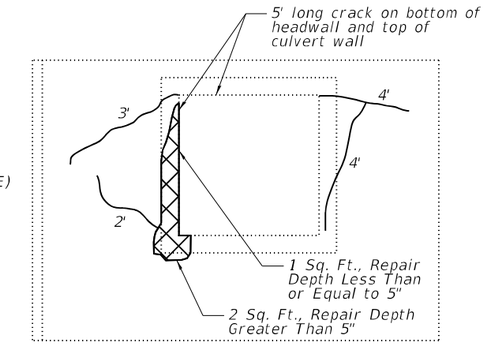

VIEW B-B

GENERAL NOTES

Plan dimensions and details relative to existing plans are subject to nominal construction variations. The Contractor shall field verify existing dimensions and details prior to construction or ordering of materials. Such variations shall not be cause for additional compensation for a change in scope of the work, however, the Contractor will be paid for the quantity actually furnished at the unit price bid for the work.

Reinforcement bars designated (E) shall be epoxy coated.

Existing reinforcement bars extending into the repair area shall be cleaned, straightened and incorporated into the new construction. Any reinforcement bars that are damaged during concrete removal shall be replaced with an approved bar splicer or anchorage system. Cost included with Structural Repair of Concrete.

All new Reinforcement Bars, Epoxy Coated shall be spaced appropriately to miss existing reinforcement bars.

Cost of drilling and epoxy grouting new reinforcement bars into existing concrete is included with Reinforcement Bars, Epoxy Coated. Drill and epoxy grout bars into existing concrete according to Article 584 of the Standard Specifications.

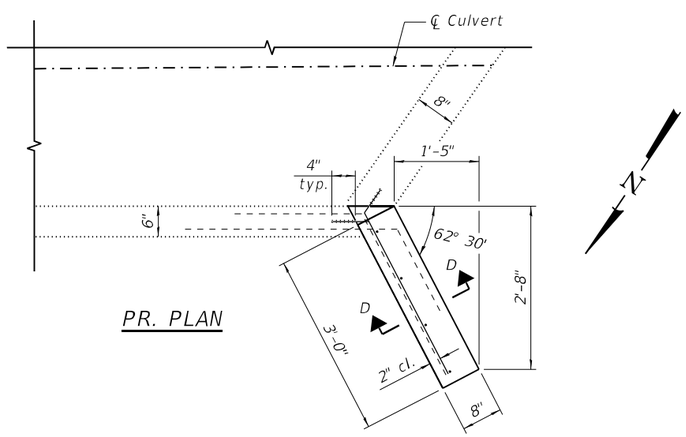

PR. PLAN

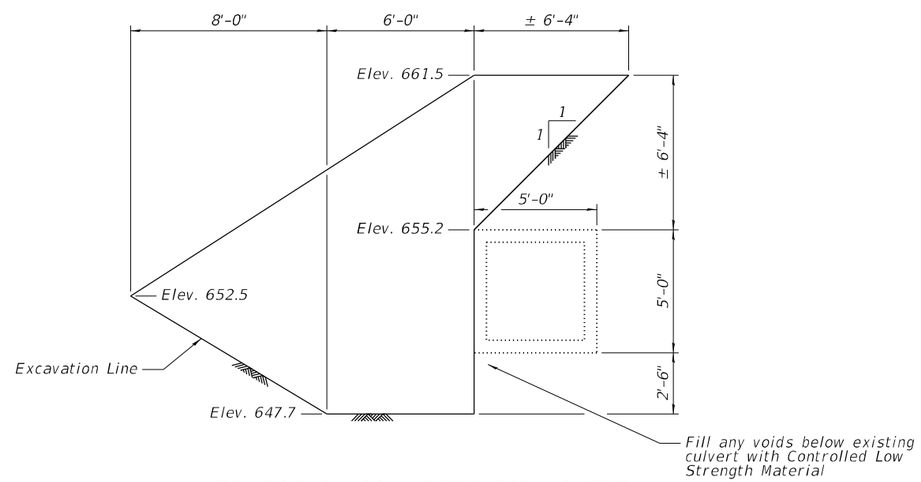

TEMPORARY SOIL RETENTION SYSTEM

Contractor shall provide design submittal including plans and detailed calculations for review and acceptance by the Engineer. Elevations shown for Temporary Soil Retention System have been estimated based on the information available during design. Contractor shall field verify all elevations.

TOTAL BILL OF MATERIAL

ITEM	UNIT	TOTAL
Concrete Removal	Cu. Yd.	0.6
Structure Excavation	Cu. Yd.	4
Concrete Structures	Cu. Yd.	0.6
Reinforcement Bars, Epoxy Coated	Pound	40
Granular Backfill for Structures	Cu. Yd.	1.5
Temporary Soil Retention System	Sq. Ft.	131
Epoxy Crack Injection	Foot	29
Structural Repair of Concrete (Depth Equal to or Less Than 5 Inches)	Sq. Ft.	1
Structural Repair of Concrete (Depth Greater Than 5 Inches)	Sq. Ft.	2
Controlled Low Strength Material	Cu. Yd.	0.5

MODEL: GPE SHT
FILE NAME: pw:\\terraeng-pw.bentley.com:terraeng-pw-01\Documents\Projects\2023\23-238-007 D4 Clorba IL 180\Design\100 - Drawings\CADD\Sheets\D468E50-SHT-CRP-56271-TRA.dgn

DESIGNED -	EXAMINED	DATE -	
CHECKED -	ENGINEER OF BRIDGE DESIGN		
DRAWN -	PASSED	REVISED -	
CHECKED -	ENGINEER OF BRIDGES AND STRUCTURES	REVISED -	

12/18/2024 10:20:40 AM

STATE OF ILLINOIS
DEPARTMENT OF TRANSPORTATION

CULVERT REPAIRS
STA. 562 + 71.00

SHEET OF SHEETS

F.A.S. RTE.	SECTION	COUNTY	TOTAL SHEETS	SHEET NO.
1195	*	KNOX	409	248

CONTRACT NO. 68E50

ILLINOIS | FED. AID PROJECT

*110RS-5:(111,112,108X-1)W,RS-3

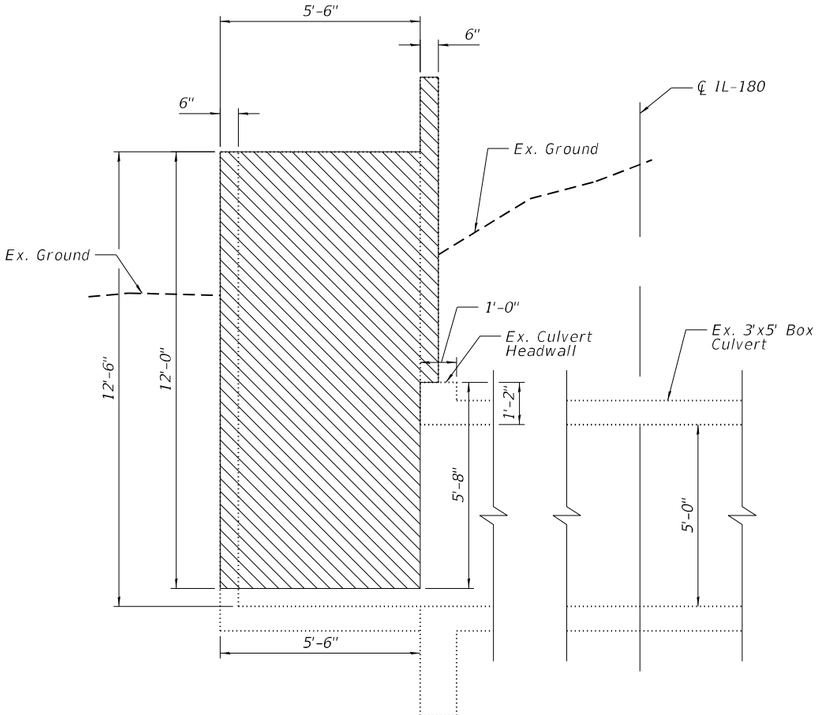

PARTIAL ELEVATION

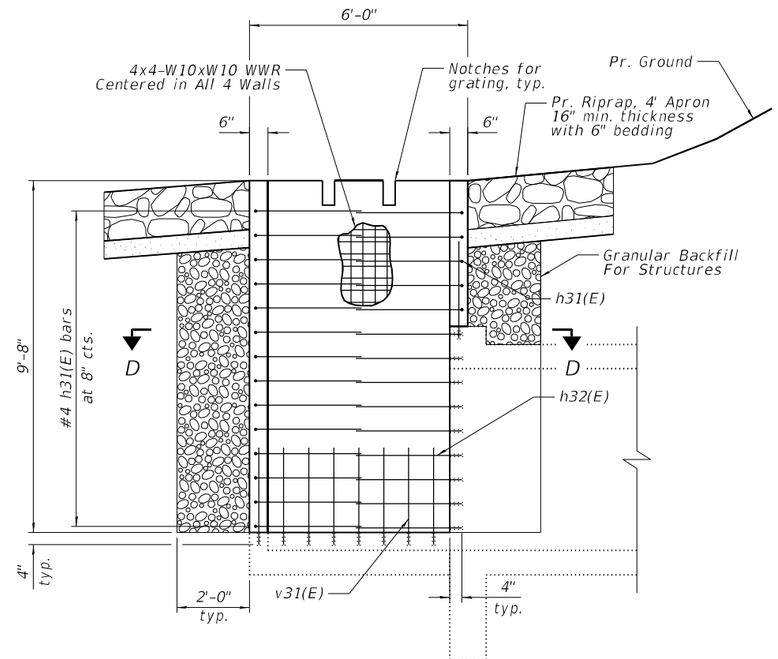

SECTION A-A

Note: Grating not shown at top of drop box for clarity.
See GRATING PLAN on Sheet 235 for more information

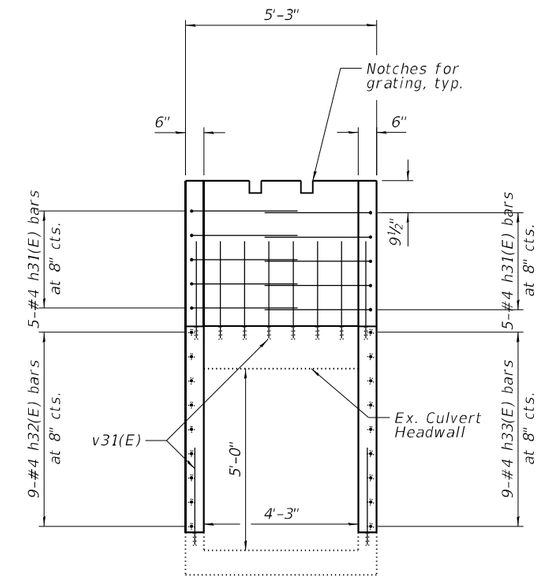

SECTION B-B

Note: Grating not shown at top of drop box for clarity.
See GRATING PLAN on Sheet 235 for more information

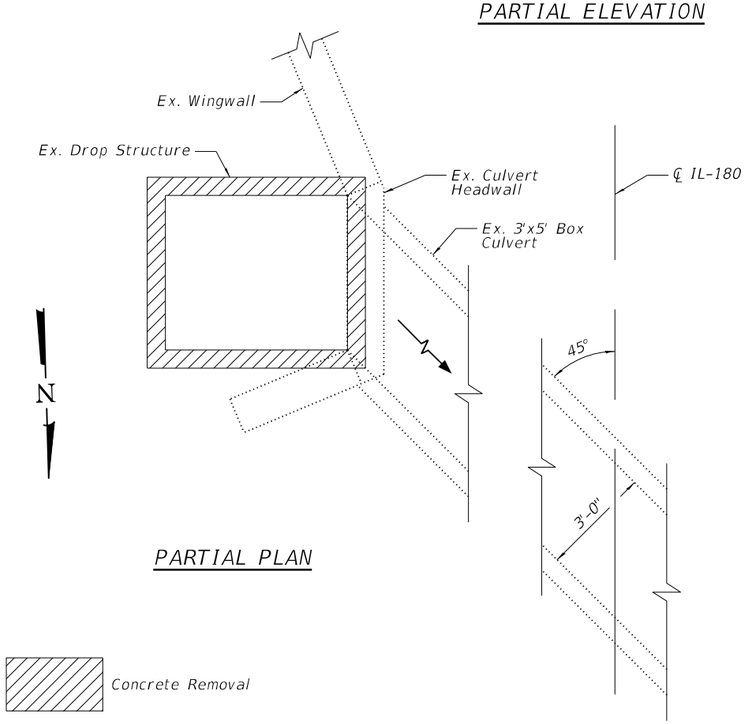

PARTIAL PLAN

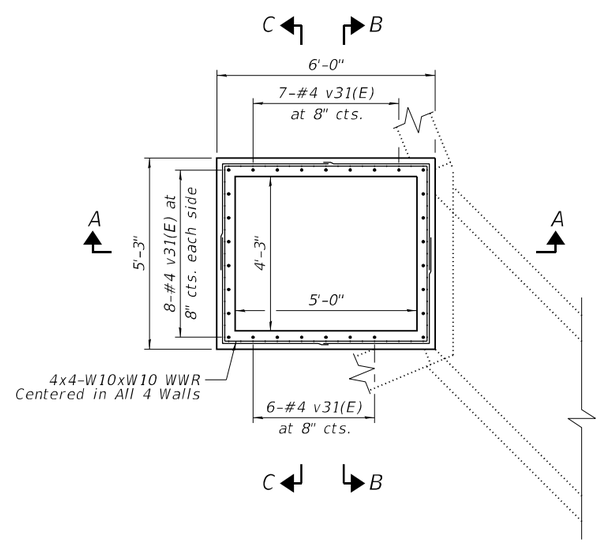

PLAN OF PR. DROP BOX STRUCTURE

Note: Grating not shown at top of drop box for clarity.
See GRATING PLAN on Sheet 235 for more information

TOTAL BILL OF MATERIAL

ITEM	UNIT	TOTAL
Removal of Existing Structures No. 5	Each	1
Concrete Structures	Cu. Yd.	3.1
Reinforcement Bars, Epoxy Coated	Pound	250
Structure Excavation	Cu. Yd.	19
Stone Riprap, Class A4	Sq. Yd.	17.1
Filter Fabric	Sq. Yd.	17.1
Expansion Bolts 1/2"	Each	8
5/8" x 9" Galv. Steel Bolts	Each	4
3" Galv. Steel Pipe	Length	6'-4" x 2
3" Galv. Steel Pipe	Length	5'-7" x 2
3" Galv. Steel Caps	Each	8
1/2" x 4" x 14" Galv. Plate	Each	4
1/4" Galv. Steel Plate (9" Nominal)	Each	4
Granular Backfill for Structures	Cu. Yd.	11.0

GENERAL NOTES

Plan dimensions and details relative to existing plans are subject to nominal construction variations. The Contractor shall field verify existing dimensions and details prior to construction or odering of materials. Such variations shall not be cause for additional compensation for a change in scope of the work, however, the Contractor will be paid for the quantity actually furnished at the unit price bid for the work.

Reinforcement bars designated (E) shall be epoxy coated.

Drilling and epoxy grouting reinforcing bars into existing concrete shall be in accordance with Art. 584 of the Standard Specifications. Cost for drilling and epoxy grouting reinforcement bars into existing concrete is included with Concrete Structures.

Costs of Welded Wire Reinforcement, galvanized steel pipes, galvanized steel bolts, galvanized steel caps, galvanized steel plates are included with Concrete Structures.

All new reinforcement bars shall be spaced appropriately to miss existing reinforcement bars.

Steel plates shall conform to AASHTO M-183 and shall be galvanized in conformance with AASHTO M-111.

Bolts, nuts and washers shall be in accordance with Article 1006.08 of the Standard Specifications and shall be galvanized.

Contractor shall field verify length of galvanized pipe required.

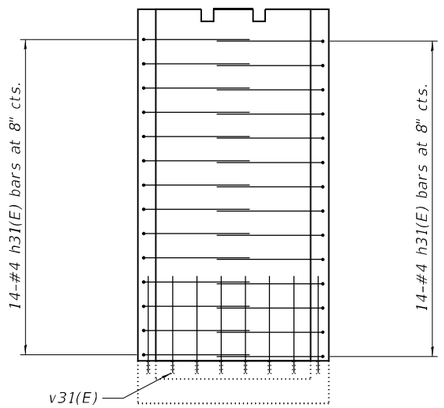

SECTION C-C

Note: Grating not shown at top of drop box for clarity.
See GRATING PLAN for more information

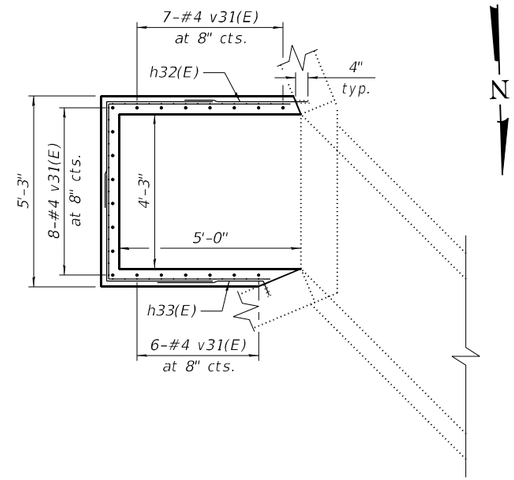

SECTION D-D

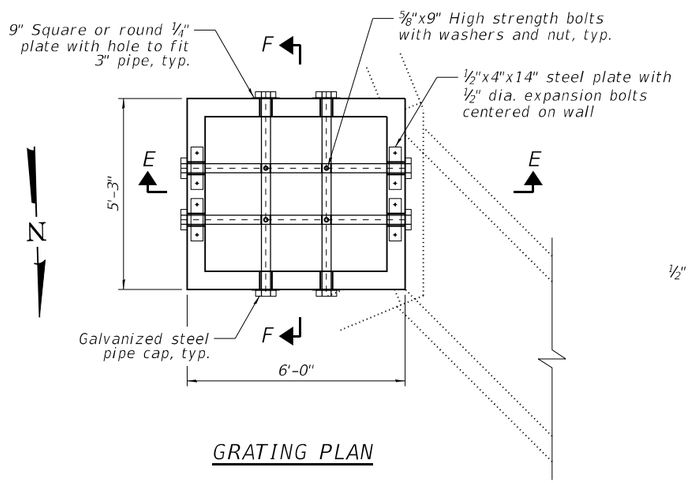

GRATING PLAN

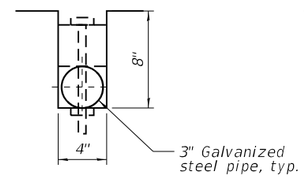

DETAIL "A"

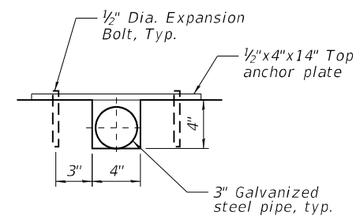

DETAIL "B"

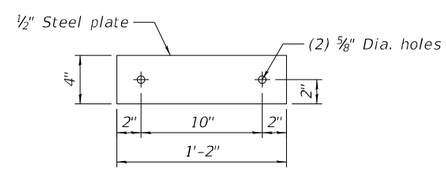

TOP ANCHOR PLATE

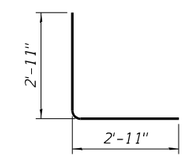

BAR h31(E)

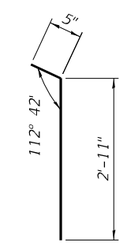

BAR h33(E)

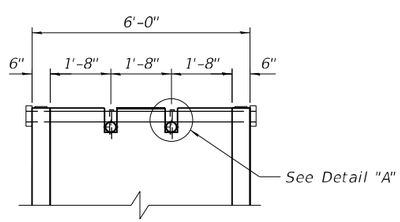

SECTION E-E

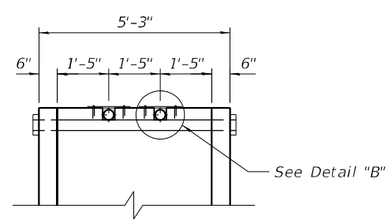

SECTION F-F

BILL OF BARS

	Bar	No.	Size	Length	Shape
	h31(E)	38	#4	5'-10"	⌋
*	h32(E)	9	#4	3'-5"	———
*	h33(E)	9	#4	3'-4"	——⌉
*	v31(E)	29	#4	2'-11"	———

* Drill and Grout Bars

MODEL: GPE SHEET
FILE NAME: pw:\\terraeng-pw.bentley.com:terraeng-pw-01\Documents\Projects\2023\23-238-007 D4 Cloba IL 180\Design\100 - Drawings\CADD\Sheets\D468E50-SHT-CRR-70392-2of2-TRA.dgn

DESIGNED -	EXAMINED	DATE -	
CHECKED -	ENGINEER OF BRIDGE DESIGN		
DRAWN -	PASSED	REVISED -	
CHECKED -	ENGINEER OF BRIDGES AND STRUCTURES	REVISED -	

STATE OF ILLINOIS
DEPARTMENT OF TRANSPORTATION

CULVERT REPAIRS
STA. 703 + 92.00

SHEET 2 OF 2 SHEETS

F.A.S. RTE.	SECTION	COUNTY	TOTAL SHEETS	SHEET NO.
1195	*	KNOX	409	250

CONTRACT NO. 68E50

ILLINOIS | FED. AID PROJECT

12/18/2024 10:20:49 AM

*110RS-5;(111,112,108X-1)W,RS-3

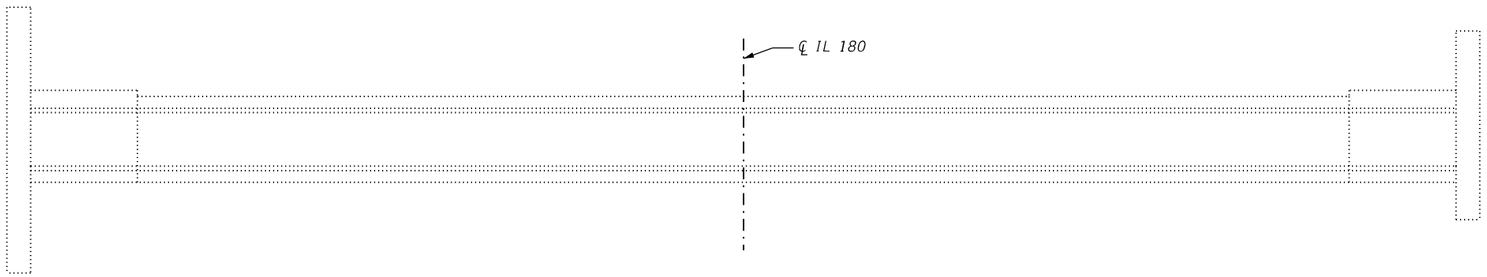

ELEVATION

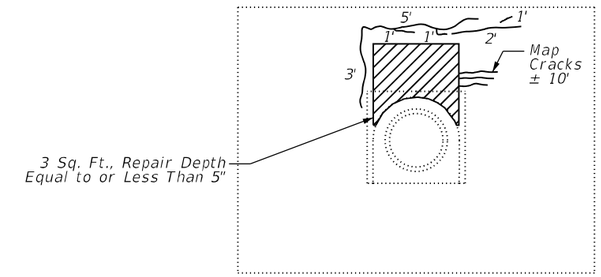

VIEW A-A

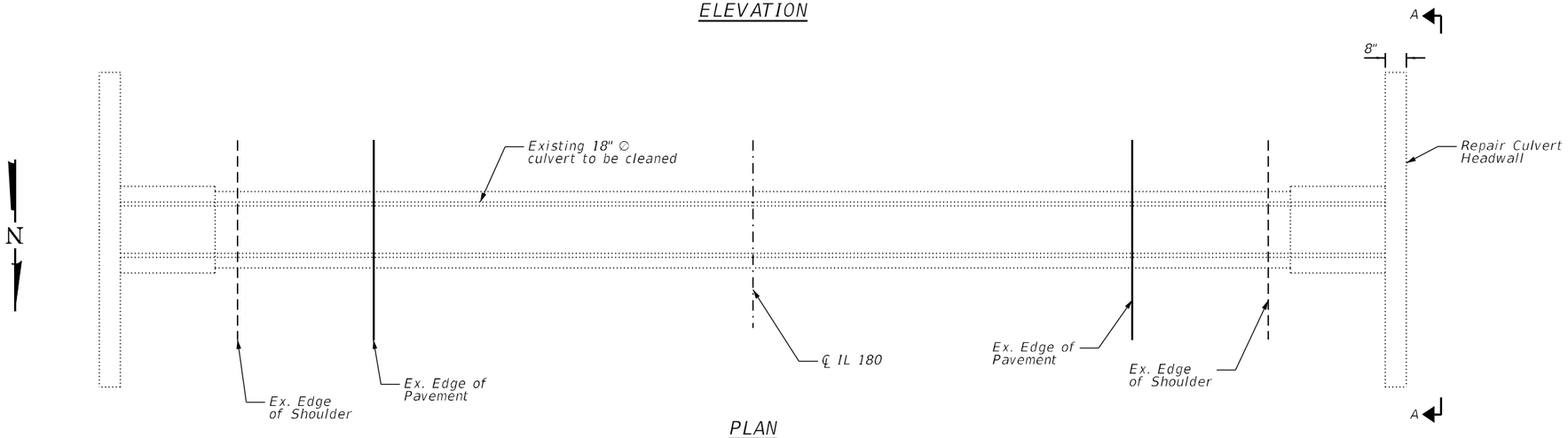

PLAN

Concrete Repair

Leaching/Crack

GENERAL NOTES

Plan dimensions and details relative to existing plans are subject to nominal construction variations. The Contractor shall field verify existing dimensions and details prior to construction or ordering of materials. Such variations shall not be cause for additional compensation for a change in scope of the work, however, the Contractor will be paid for the quantity actually furnished at the unit price bid for the work.

Existing reinforcement bars extending into the repair area shall be cleaned, straightened and incorporated into the new construction. Any reinforcement bars that are damaged during concrete removal shall be replaced with an approved bar splicer or anchorage system. Cost included with Structural Repair of Concrete.

TOTAL BILL OF MATERIAL

ITEM	UNIT	TOTAL
Structural Repair of Concrete (Depth Equal to or Less Than 5 Inches)	Sq. Ft.	3
Epoxy Crack Injection	Foot	23
Pipe Culverts to be Cleaned 18"	Foot	41

MODEL: GPE SHT
FILE NAME: pw:\\terraeng-pw.bentley.com:terraeng-pw-01\Documents\Projects\2023\23-238-007 D4 Clorba IL 180\Design\100 - Drawings\CADD\Sheets\D468E50-SHT-CRP-3063-TRA.dgn

DESIGNED -	EXAMINED	DATE -	2024/05/14
CHECKED -	ENGINEER OF BRIDGE DESIGN		
DRAWN -	PASSED	REVISED -	
CHECKED -	ENGINEER OF BRIDGES AND STRUCTURES	REVISED -	

STATE OF ILLINOIS
DEPARTMENT OF TRANSPORTATION

CULVERT HEADWALL REPAIRS
STA. 30 + 63.00

SHEET OF SHEETS

F.A.S. RTE.	SECTION	COUNTY	TOTAL SHEETS	SHEET NO.
1195	*	KNOX	409	251

CONTRACT NO. 68E50

ILLINOIS | FED. AID PROJECT

12/18/2024 10:20:57 AM

*110RS-5:(111,112,108X-1)W,RS-3

Benchmark: Brass disk on the top of the Northwest wingwall of S.N. 048-0089 right of station 586+15±.
Ex. Structure: None.
New Structure: The proposed wall is a drilled soldier pile retaining wall with timber lagging and CIP Concrete Facing that is 565'-9" in length and has a max. exposed height of 4'-11$\frac{3}{8}$".
Traffic Control: Traffic is to be maintained during construction utilizing Stage Construction.
No salvage.

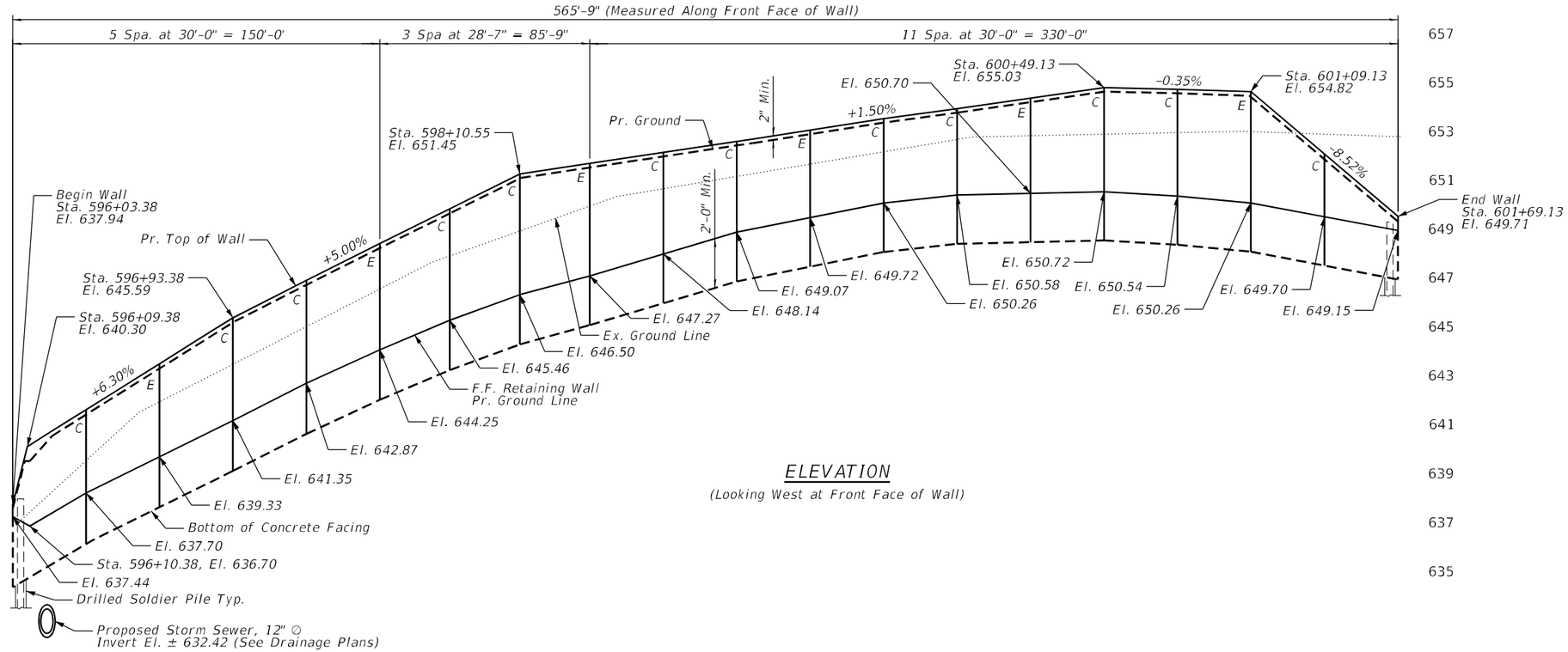

ELEVATION

(Looking West at Front Face of Wall)

DESIGN SPECIFICATIONS

2020 AASHTO LRFD Bridge Design Specifications, 9th Edition

DESIGN STRESSES

FIELD UNITS

f'c = 3,500 psi
fy = 60,000 psi (Reinforcement)

SOLDIER PILES

fy = 50,000 psi (M270 Grade 50)

NOTES:

1. Stations and Offsets are measured from ℄ IL 180 to the Front Face of the Retaining Wall facing panels.
2. F.F. denotes Front Face.
3. B.F. denotes Back Face.
4. C denotes Construction Joint.
5. E denotes Expansion Joint.

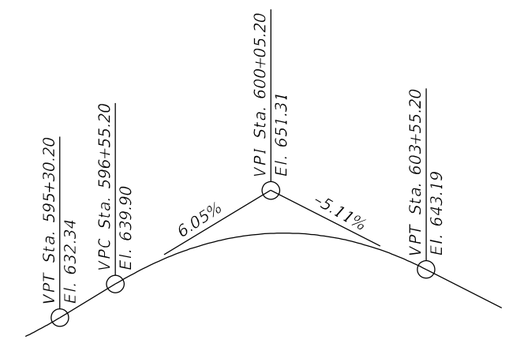

PROFILE GRADE

(Along IL 180)

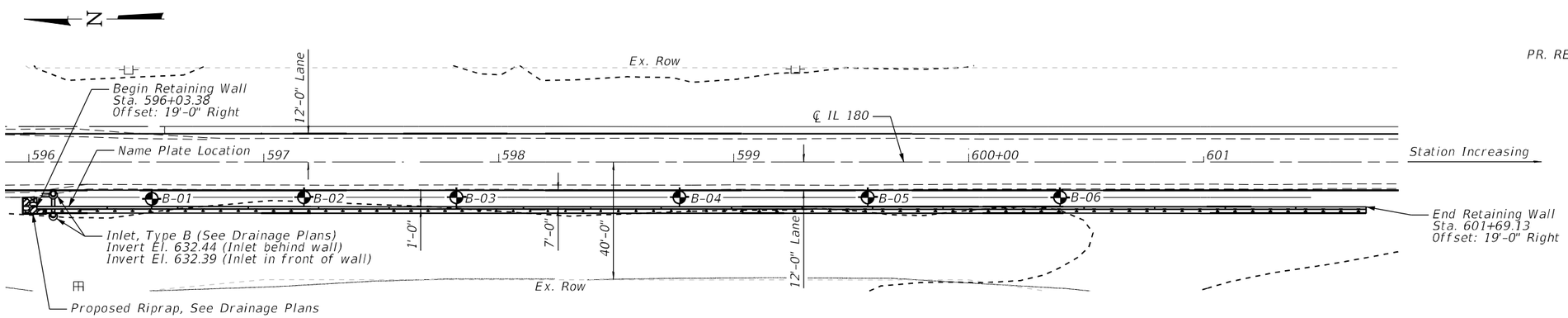

PLAN

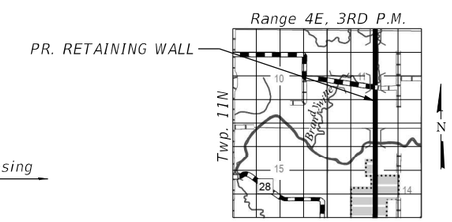

LOCATION SKETCH

LEGEND

- Soil Boring
- Pr. Aggregate Shoulder
- Pr. Retaining Wall or Edge of Pavement
- Ex. ROW
- Ex. Fence
- Ex. Edge of Pavement

GENERAL PLAN AND ELEVATION
RETAINING WALL ALONG IL 180
FAS 1195
SECTION 10W-1,RS-5;(111,112,108X-1)W,RS-3
KNOX COUNTY
STATION 596+03.38 TO STATION 601+69.13
STRUCTURE NO.

DESIGNED -	EXAMINED	DATE -	
CHECKED -	ENGINEER OF BRIDGE DESIGN		
DRAWN -	PASSED	REVISED -	
CHECKED -	ENGINEER OF BRIDGES AND STRUCTURES	REVISED -	

STATE OF ILLINOIS
DEPARTMENT OF TRANSPORTATION

GENERAL PLAN AND ELEVATION
PR. RETAINING WALL – STA. 596 + 03.38 TO STA. 601 + 69.13
SHEET 1 OF 13 SHEETS

F.A.S. RTE.	SECTION	COUNTY	TOTAL SHEETS	SHEET NO.
1195	*	KNOX	409	252
		CONTRACT NO. 68E50		
		ILLINOIS	FED. AID PROJECT	

*110RS-5;(111,112,108X-1)W,RS-3

MODEL: GPE SHT
FILE NAME: pw:\\terraeng-pw.bentley.com:terraeng-pw-01\Documents\Projects\2023\23-238-007 D4 Clorba IL 180\Design\100 - Drawings\CADD\Sheets\D468E50-SHT-GPE-RW597-TRA-001.dgn

12/18/2024 10:22:31 AM

GENERAL NOTES

1. No field welding is permitted except as specified in the contract documents.
2. Reinforcement bars shall conform to the requirements of ASTM A 706 Grade 60.
3. Reinforcement bars designated (E) shall be epoxy coated.
4. The Contractor is responsible for the design and performance of the lagging using no less than a 3 in. nominal rough-sawn thickness and timber with minimum allowable bending stress of 1,000 psi.
5. The clear cover for the reinforcement bars to the surface of concrete shall be 2" unless otherwise shown.
6. Protective Coat and Rubbed Finish shall be applied to all exposed surfaces of the concrete facing for the full length of the wall.
7. All Exposed Concrete Edges shall have a $\frac{3}{4}$" X 45° chamfer except where shown otherwise. Chamfer on vertical edges shall be continued a minimum of one foot below finished ground level.
8. The use of temporary casing and the wet method of installation of the soldier pile encasement may be required. The cost of temporary casing and any dewatering of excavations that may be necessary is included with Drilling and Setting Soldier Piles (in Soil).

SEQUENCE OF CONSTRUCTION

1. Locate existing utilities that are to remain and protect from damage during construction. Contractor to coordinate any required improvements to, or removals of, existing utilities with utility owner.
2. Drill for Soldier Pile shafts, install soldier piles and concrete encasement.
3. Excavation in front of the wall will proceed to the bottom of the facing by installing timber lagging downward.
4. Once excavation is completed the cast in place facing shall be installed.

INDEX OF SHEETS

TOTAL BILL OF MATERIAL

ITEM	UNIT	TOTAL
Structure Excavation	Cu. Yd.	155
Concrete Structures (Retaining Wall)	Cu. Yd.	124.2
Rubbed Finish	Sq. Ft.	2,900
Protective Coat	Sq. Yd.	323
Stud Shear Connectors	Each	382
Reinforcement Bars, Epoxy Coated	Pound	14,230
Name Plates	Each	1
Furnishing Soldier Piles (HP Section)	Foot	1,900
Drilling and Setting Soldier Piles (In Soil)	Cu. Ft.	4,122
Drilling and Setting Soldier Piles (In Rock)	Cu. Ft.	1,962
Untreated Timber Lagging	Sq. Ft.	2,251
Geocomposite Wall Drain	Sq. Yd.	206
Concrete Gutter, Type B	Foot	562
Pipe Underdrains for Structures 4"	Foot	586

STA. 596+03.38 TO STA. 601+69.13
BUILT 202_ BY
STATE OF ILLINOIS
FAS Rt. 1195
Sec. 10W-1,RS-5;(111,112,108X-1)W,RS-3
STR. NO.

NAME PLATE

See Std. 515001

MODEL: GPE SHT
FILE NAME: pw:\\terraeng-pw.bentley.com:terraeng-pw-01\Documents\Projects\2023\23-238-007 D4 Cloriba IL 180\Design\100 - Drawings\CADD\Sheets\D468E50-SHT-GPE-RW597-TRA-002.dgn

DESIGNED -	EXAMINED	DATE -	
CHECKED -	ENGINEER OF BRIDGE DESIGN		
DRAWN -	PASSED	REVISED -	
CHECKED -	ENGINEER OF BRIDGES AND STRUCTURES	REVISED -	

STATE OF ILLINOIS
DEPARTMENT OF TRANSPORTATION

GENERAL NOTES & BILL OF MATERIAL
PR. RETAINING WALL – STA. 596+03.38 TO STA. 601+69.13
SHEET 2 OF 13 SHEETS

F.A.S. RTE.	SECTION	COUNTY	TOTAL SHEETS	SHEET NO.
1195	*	KNOX	409	253
		CONTRACT NO. 68E50		
		ILLINOIS	FED. AID PROJECT	

12/18/2024 10:22:35 AM

*110RS-5;(111,112,108X-1)W,RS-3

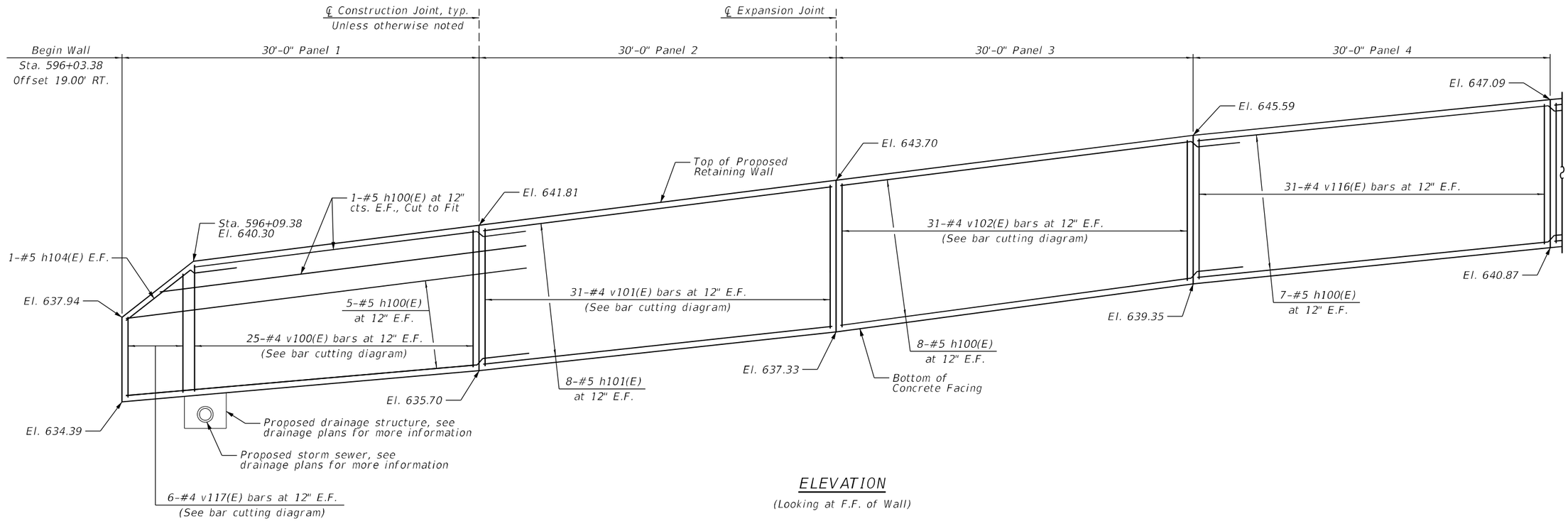

ELEVATION

(Looking at F.F. of Wall)

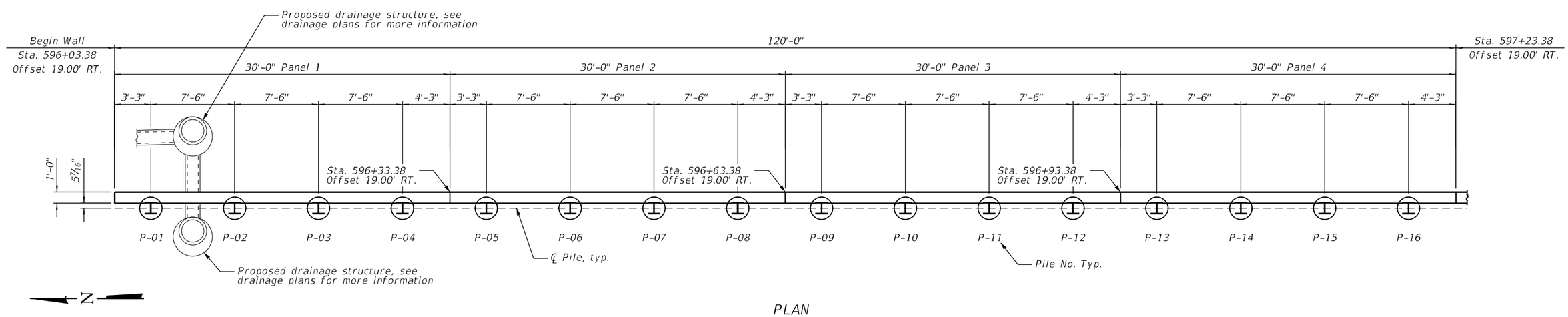

PLAN

MINIMUM BAR LAP

#5 bar = 3'-7"

NOTES

1. Stations and offsets are measured from ℄ IL 180 to the front face of the retaining wall facing panels.
2. E.F. denotes each face.
3. F.F. denotes front face.
4. For bar cutting diagram, see Sheet S-10.

MODEL: PLAN + EL
FILE NAME: pw:\\terraeng-pw.bentley.com:terraeng-pw-01\Documents\Projects\2023\23-238-007 D4 Clorba IL 180\Design\100 - Drawings\CADD\Sheets\D468E50-SHT-GPE-RW597-TRA-003.dgn

DESIGNED -	EXAMINED	DATE -	
CHECKED -	ENGINEER OF BRIDGE DESIGN		
DRAWN -	PASSED	REVISED -	
CHECKED -	ENGINEER OF BRIDGES AND STRUCTURES	REVISED -	

STATE OF ILLINOIS
DEPARTMENT OF TRANSPORTATION

PLAN AND ELEVATION I

SHEET 3 OF 13 SHEETS

F.A.S. RTE.	SECTION	COUNTY	TOTAL SHEETS	SHEET NO.
1195	*	KNOX	409	254

CONTRACT NO. 68E50

ILLINOIS | FED. AID PROJECT

12/18/2024 10:22:39 AM

*110RS-5;(111,112,108X-1)W,RS-3

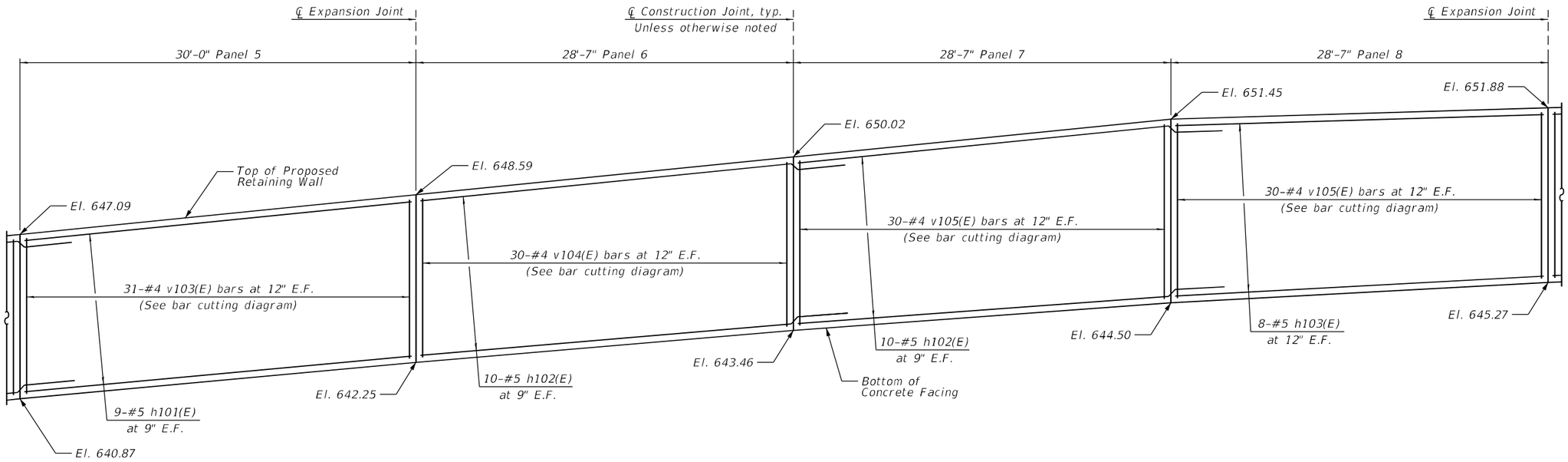

ELEVATION

(Looking at F.F. of Wall)

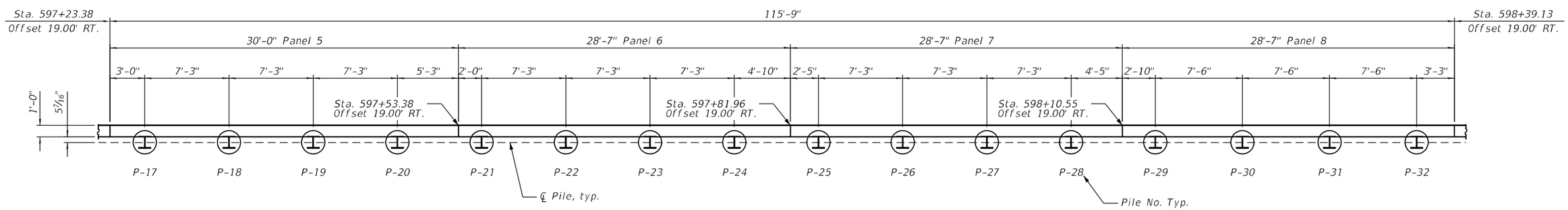

N

PLAN

MINIMUM BAR LAP

#5 bar = 3'-7"

NOTES

1. Stations and offsets are measured from ℄ IL 180 to the front face of the retaining wall facing panels.
2. E.F. denotes each face.
3. F.F. denotes front face.
4. For bar cutting diagram, see Sheet S-10.

MODEL: PLAN + EL
FILE NAME: pw:\\terraeng-pw.bentley.com:terraeng-pw-01\Documents\Projects\2023\23-238-007 D4 Clorba IL 180\Design\100 - Drawings\CADD\Sheets\D468E50-SHT-GPE-RW597-TRA-004.dgn

DESIGNED -	EXAMINED	DATE -	
CHECKED -	ENGINEER OF BRIDGE DESIGN		
DRAWN -	PASSED	REVISED -	
CHECKED -	ENGINEER OF BRIDGES AND STRUCTURES	REVISED -	

STATE OF ILLINOIS
DEPARTMENT OF TRANSPORTATION

PLAN AND ELEVATION II

SHEET 4 OF 13 SHEETS

F.A.S. RTE.	SECTION	COUNTY	TOTAL SHEETS	SHEET NO.
1195	*	KNOX	409	255

CONTRACT NO. 68E50

ILLINOIS | FED. AID PROJECT

12/18/2024 10:22:44 AM

*110RS-5;(111,112,108X-1)W,RS-3

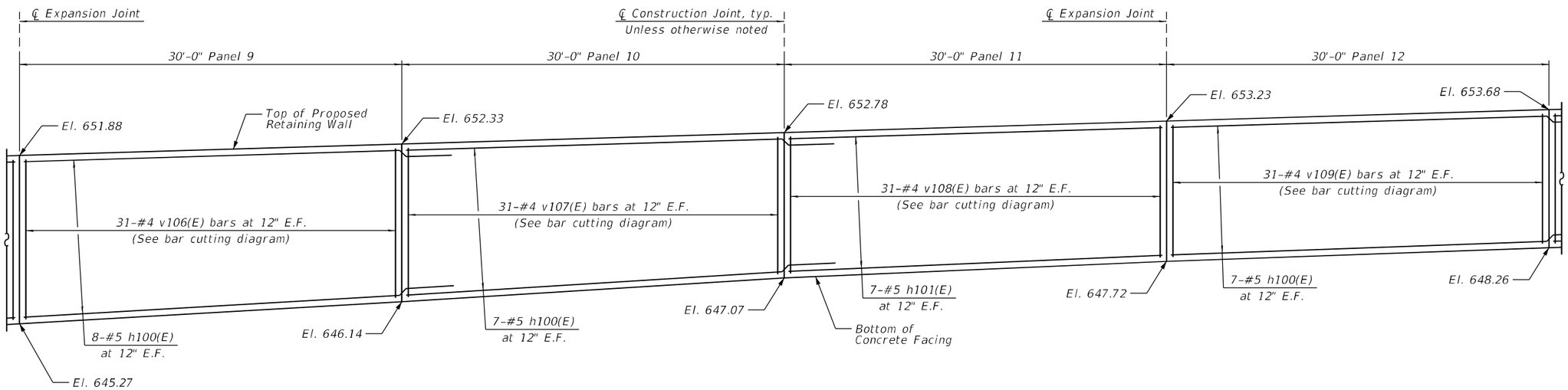

ELEVATION

(Looking at F.F. of Wall)

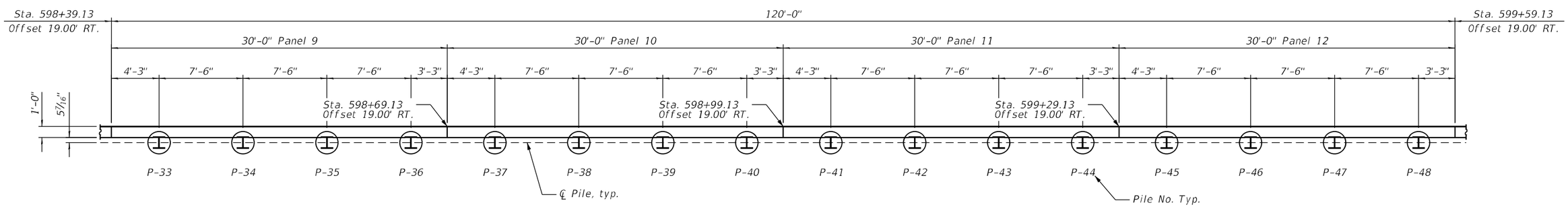

PLAN

MINIMUM BAR LAP

#5 bar = 3'-7"

NOTES

1. Stations and offsets are measured from ℄ IL 180 to the front face of the retaining wall facing panels.
2. E.F. denotes each face.
3. F.F. denotes front face.
4. For bar cutting diagram, see Sheet S-10.

MODEL: PLAN + EL
FILE NAME: pw:\\terraeng-pw.bentley.com:terraeng-pw-01\Documents\Projects\2023\23-238-007 D4 Cloriba IL 180\Design\100 - Drawings\CADD\Sheets\D468E50-SHT-GPE-RW597-TRA-005.dgn

DESIGNED -	EXAMINED	DATE -	
CHECKED -	ENGINEER OF BRIDGE DESIGN		
DRAWN -	PASSED	REVISED -	
CHECKED -	ENGINEER OF BRIDGES AND STRUCTURES	REVISED -	

STATE OF ILLINOIS
DEPARTMENT OF TRANSPORTATION

PLAN AND ELEVATION III

SHEET 5 OF 13 SHEETS

F.A.S. RTE.	SECTION	COUNTY	TOTAL SHEETS	SHEET NO.
1195	*	KNOX	409	256

CONTRACT NO. 68E50

ILLINOIS | FED. AID PROJECT

12/18/2024 10:22:48 AM

*110RS-5;(111,112,108X-1)W,RS-3

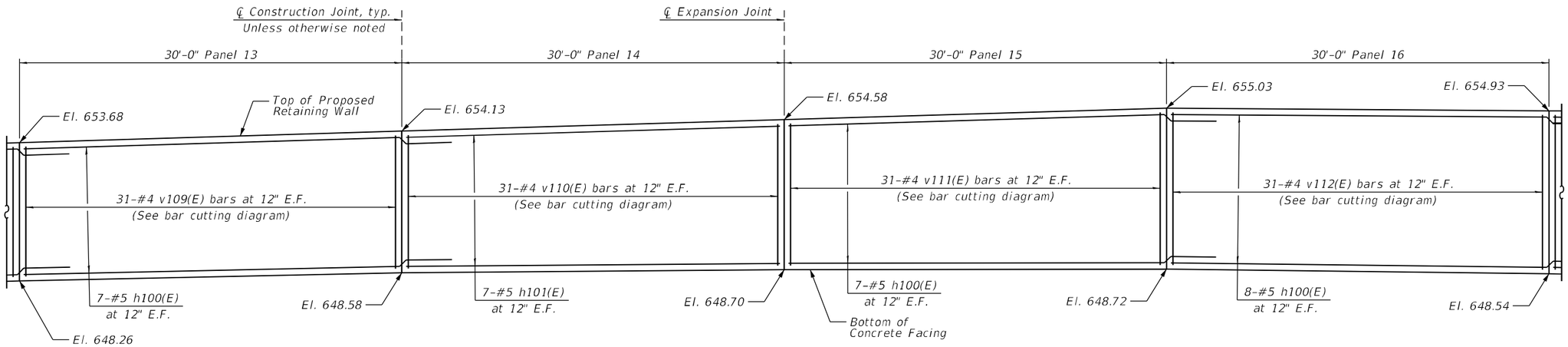

ELEVATION

(Looking at F.F. of Wall)

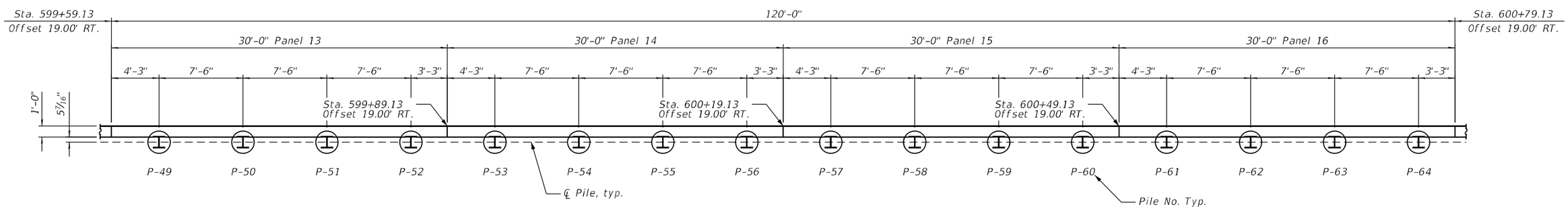

N

PLAN

MINIMUM BAR LAP

#5 bar = 3'-7"

NOTES

1. Stations and offsets are measured from ℄ IL 180 to the front face of the retaining wall facing panels.
2. E.F. denotes each face.
3. F.F. denotes front face.
4. For bar cutting diagram, see Sheet S-10.

MODEL: PLAN + EL
FILE NAME: pw:\\terraeng-pw.bentley.com:terraeng-pw-01\Documents\Projects\2023\23-238-007 D4 Clorba IL 180\Design\100 - Drawings\CADD\Sheets\D468E50-SHT-GPE-RW597-TRA-006.dgn

DESIGNED -	EXAMINED	DATE -	
CHECKED -	ENGINEER OF BRIDGE DESIGN		
DRAWN -	PASSED	REVISED -	
CHECKED -	ENGINEER OF BRIDGES AND STRUCTURES	REVISED -	

STATE OF ILLINOIS
DEPARTMENT OF TRANSPORTATION

PLAN AND ELEVATION IV

SHEET 6 OF 13 SHEETS

F.A.S. RTE.	SECTION	COUNTY	TOTAL SHEETS	SHEET NO.
1195	*	KNOX	409	257

CONTRACT NO. 68E50

ILLINOIS | FED. AID PROJECT

12/18/2024 10:22:52 AM

*110RS-5;(111,112,108X-1)W,RS-3

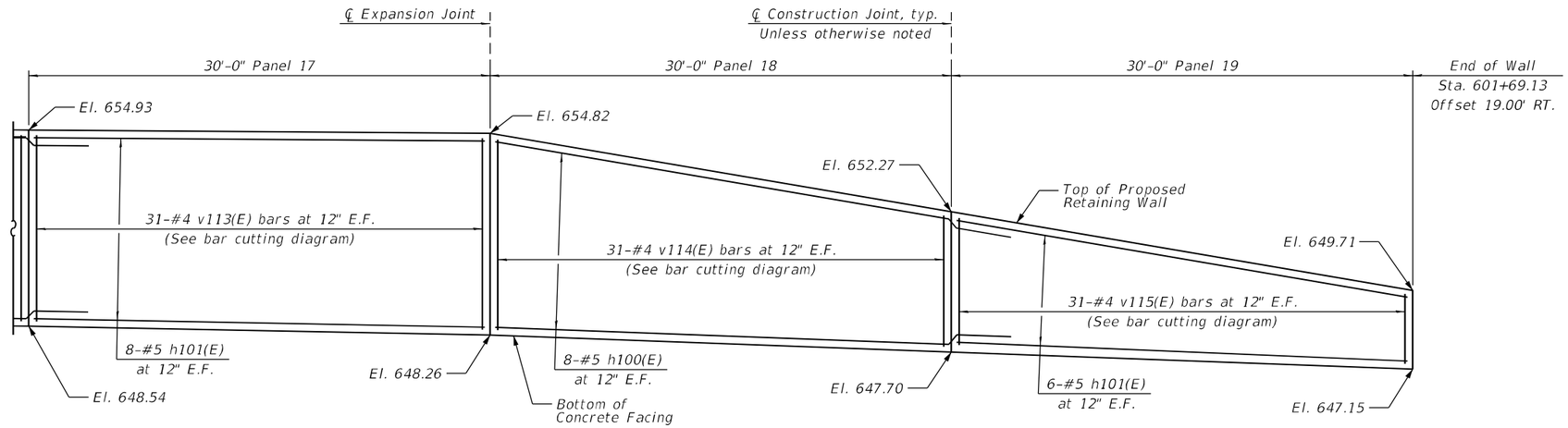

ELEVATION

(Looking at F.F. of Wall)

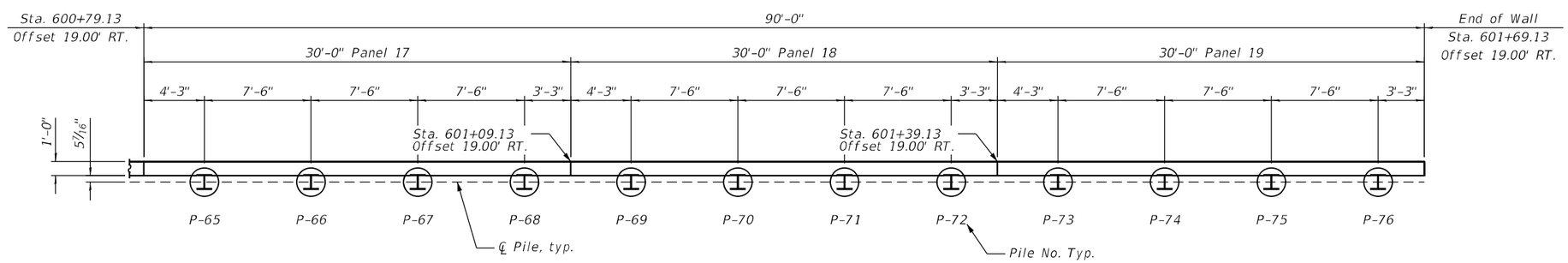

PLAN

MINIMUM BAR LAP

#5 bar = 3'-7"

NOTES

1. Stations and offsets are measured from ℄ IL 180 to the front face of the retaining wall facing panels.
2. E.F. denotes each face.
3. F.F. denotes front face.
4. For bar cutting diagram, see Sheet S-10.

MODEL: PLAN + EL
FILE NAME: pw:\\terraeng-pw.bentley.com:terraeng-pw-01\Documents\Projects\2023\23-238-007 D4 Clorba IL 180\Design\100 - Drawings\CADD\Sheets\D468E50-SHT-GPE-RW597-TRA-007.dgn

DESIGNED -	EXAMINED	DATE -	
CHECKED -	ENGINEER OF BRIDGE DESIGN		
DRAWN -	PASSED	REVISED -	
CHECKED -	ENGINEER OF BRIDGES AND STRUCTURES	REVISED -	

12/18/2024 10:22:56 AM

STATE OF ILLINOIS
DEPARTMENT OF TRANSPORTATION

PLAN AND ELEVATION V

SHEET 7 OF 13 SHEETS

F.A.S. RTE.	SECTION	COUNTY	TOTAL SHEETS	SHEET NO.
1195	*	KNOX	409	258

CONTRACT NO. 68E50

ILLINOIS | FED. AID PROJECT

*110RS-5;(111,112,108X-1)W,RS-3

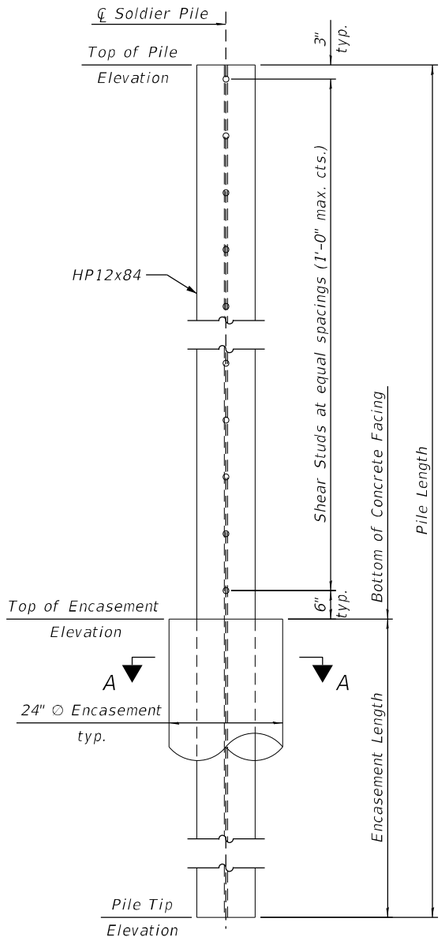

SOLDIER PILE ELEVATION AND SHEAR STUD CONNECTION DETAIL

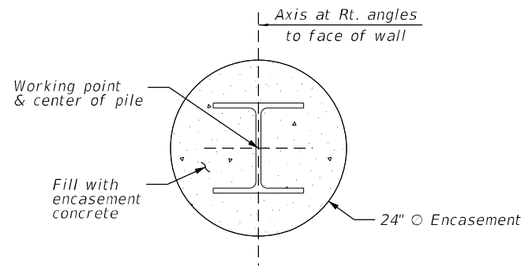

SECTION A-A

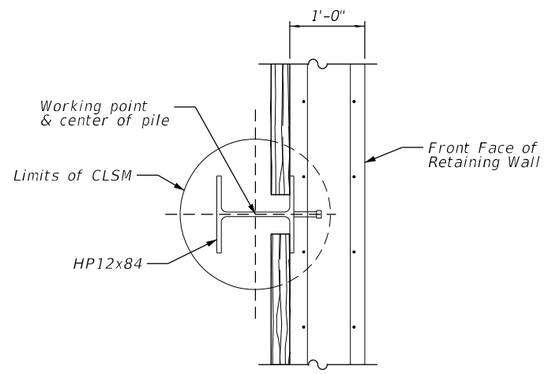

SOLDIER PILE WORKING POINT

NOTES

1. Stations and offsets are measured from ℄ IL 180

PANEL	PILE	HP SHAPE	STATION	OFFSET TO ℄ PILE	TOP OF WALL EL.	TOP OF PILE EL.	BOTT. OF CONC. FACING EL.	PILE TIP EL.	PILE LENGTH	NO. OF SHEAR CONNECTORS
1	P-01	HP12x84	596+06.63	20.46' RT.	639.22	637.55	634.53	613.80	23.75'	4
	P-02	HP12x84	596+14.13	20.46' RT.	640.60	638.66	634.86	613.80	24.86'	5
	P-03	HP12x84	596+21.63	20.46' RT.	641.07	639.40	635.19	613.80	25.60'	5
	P-04	HP12x84	596+29.13	20.46' RT.	641.54	639.88	635.51	613.80	26.08'	5
2	P-05	HP12x84	596+36.63	20.46' RT.	642.01	640.35	635.88	614.30	26.05'	5
	P-06	HP12x84	596+44.13	20.46' RT.	642.49	640.82	636.28	614.60	26.22'	5
	P-07	HP12x84	596+51.63	20.46' RT.	642.96	641.29	636.69	615.10	26.19'	5
	P-08	HP12x84	596+59.13	20.46' RT.	643.43	641.77	637.10	615.50	26.27'	5
3	P-09	HP12x84	596+66.63	20.46' RT.	643.90	642.24	637.55	616.10	26.14'	5
	P-10	HP12x84	596+74.13	20.46' RT.	644.38	642.71	638.05	616.45	26.26'	5
	P-11	HP12x84	596+81.63	20.46' RT.	644.85	643.18	638.56	617.00	26.18'	5
	P-12	HP12x84	596+89.13	20.46' RT.	645.32	643.66	639.06	617.46	26.20'	5
4	P-13	HP12x84	596+96.63	20.46' RT.	645.75	644.09	639.51	619.09	25.00'	5
	P-14	HP12x84	597+04.13	20.46' RT.	646.13	644.46	639.89	619.46	25.00'	5
	P-15	HP12x84	597+11.63	20.46' RT.	646.50	644.84	640.27	619.84	25.00'	5
	P-16	HP12x84	597+19.13	20.46' RT.	646.88	645.21	640.65	620.21	25.00'	5
5	P-17	HP12x84	597+26.38	20.46' RT.	647.24	645.57	641.01	620.57	25.00'	5
	P-18	HP12x84	597+33.63	20.46' RT.	647.60	645.94	641.34	620.94	25.00'	5
	P-19	HP12x84	597+40.88	20.46' RT.	647.97	646.30	641.68	621.30	25.00'	5
	P-20	HP12x84	597+48.13	20.46' RT.	648.33	646.66	642.01	621.66	25.00'	5
6	P-21	HP12x84	597+55.38	20.46' RT.	648.69	647.02	642.33	622.02	25.00'	5
	P-22	HP12x84	597+62.63	20.46' RT.	649.05	647.39	642.64	622.39	25.00'	5
	P-23	HP12x84	597+69.88	20.46' RT.	649.42	647.75	642.95	622.75	25.00'	6
	P-24	HP12x84	597+77.13	20.46' RT.	649.78	648.11	643.26	623.11	25.00'	6
7	P-25	HP12x84	597+84.38	20.46' RT.	650.14	648.47	643.55	623.47	25.00'	6
	P-26	HP12x84	597+91.63	20.46' RT.	650.50	648.84	643.81	623.84	25.00'	6
	P-27	HP12x84	597+98.88	20.46' RT.	650.87	649.20	644.08	624.20	25.00'	6
	P-28	HP12x84	598+06.13	20.46' RT.	651.23	649.56	644.34	624.56	25.00'	6
8	P-29	HP12x84	598+13.38	20.46' RT.	651.49	649.83	644.58	624.83	25.00'	6
	P-30	HP12x84	598+20.88	20.46' RT.	651.61	649.94	644.78	624.94	25.00'	6
	P-31	HP12x84	598+28.38	20.46' RT.	651.72	650.05	644.98	625.05	25.00'	6
	P-32	HP12x84	598+35.88	20.46' RT.	651.83	650.16	645.18	625.16	25.00'	6
9	P-33	HP12x84	598+43.38	20.46' RT.	651.94	650.28	645.39	625.28	25.00'	6
	P-34	HP12x84	598+50.88	20.46' RT.	652.06	650.39	645.61	625.39	25.00'	6
	P-35	HP12x84	598+58.38	20.46' RT.	652.17	650.50	645.83	625.50	25.00'	5
	P-36	HP12x84	598+65.88	20.46' RT.	652.28	650.61	646.05	625.61	25.00'	5
10	P-37	HP12x84	598+73.38	20.46' RT.	652.39	650.73	646.27	625.73	25.00'	5
	P-38	HP12x84	598+80.88	20.46' RT.	652.51	650.84	646.50	625.84	25.00'	5
	P-39	HP12x84	598+88.38	20.46' RT.	652.62	650.95	646.74	625.95	25.00'	5
	P-40	HP12x84	598+95.88	20.46' RT.	652.73	651.06	646.97	626.06	25.00'	5
11	P-41	HP12x84	599+03.38	20.46' RT.	652.84	651.18	647.16	626.18	25.00'	5
	P-42	HP12x84	599+10.88	20.46' RT.	652.96	651.29	647.32	626.29	25.00'	5
	P-43	HP12x84	599+18.38	20.46' RT.	653.07	651.40	647.49	626.40	25.00'	5
	P-44	HP12x84	599+25.88	20.46' RT.	653.18	651.51	647.65	626.51	25.00'	5
12	P-45	HP12x84	599+33.38	20.46' RT.	653.29	651.63	647.80	626.63	25.00'	5
	P-46	HP12x84	599+40.88	20.46' RT.	653.41	651.74	647.93	626.74	25.00'	5
	P-47	HP12x84	599+48.38	20.46' RT.	653.52	651.85	648.07	626.85	25.00'	5
	P-48	HP12x84	599+55.88	20.46' RT.	653.63	651.96	648.20	626.96	25.00'	5
13	P-49	HP12x84	599+63.38	20.46' RT.	653.74	652.08	648.31	627.08	25.00'	5
	P-50	HP12x84	599+70.88	20.46' RT.	653.86	652.19	648.39	627.19	25.00'	5
	P-51	HP12x84	599+78.38	20.46' RT.	653.97	652.30	648.47	627.30	25.00'	5
	P-52	HP12x84	599+85.88	20.46' RT.	654.08	652.41	648.55	627.41	25.00'	5
14	P-53	HP12x84	599+93.38	20.46' RT.	654.19	652.53	648.60	627.53	25.00'	5
	P-54	HP12x84	600+00.88	20.46' RT.	654.31	652.64	648.63	627.64	25.00'	5
	P-55	HP12x84	600+08.38	20.46' RT.	654.42	652.75	648.66	626.90	25.85'	5
	P-56	HP12x84	600+15.88	20.46' RT.	654.53	652.86	648.69	626.90	25.96'	5
15	P-57	HP12x84	600+23.38	20.46' RT.	654.64	652.98	648.70	626.90	26.08'	5
	P-58	HP12x84	600+30.88	20.46' RT.	654.76	653.09	648.71	626.90	26.19'	5
	P-59	HP12x84	600+38.38	20.46' RT.	654.87	653.20	648.71	627.90	25.30'	5
	P-60	HP12x84	600+45.88	20.46' RT.	654.98	653.31	648.72	627.90	25.41'	5
16	P-61	HP12x84	600+53.38	20.46' RT.	655.02	653.35	648.69	627.90	25.45'	5
	P-62	HP12x84	600+60.88	20.46' RT.	654.99	653.32	648.65	627.90	25.42'	5
	P-63	HP12x84	600+68.38	20.46' RT.	654.96	653.30	648.60	627.90	25.40'	5
	P-64	HP12x84	600+75.88	20.46' RT.	654.94	653.27	648.56	627.90	25.37'	5
17	P-65	HP12x84	600+83.38	20.46' RT.	654.91	653.24	648.50	627.90	25.34'	5
	P-66	HP12x84	600+90.88	20.46' RT.	654.88	653.22	648.43	627.90	25.32'	6
	P-67	HP12x84	600+98.38	20.46' RT.	654.86	653.19	648.36	627.90	25.29'	6
	P-68	HP12x84	601+05.88	20.46' RT.	654.83	653.16	648.29	627.90	25.26'	6
18	P-69	HP12x84	601+13.38	20.46' RT.	654.46	652.79	648.18	627.90	24.89'	5
	P-70	HP12x84	601+20.88	20.46' RT.	653.82	652.15	648.04	627.90	24.25'	5
	P-71	HP12x84	601+28.38	20.46' RT.	653.18	651.51	647.90	627.90	23.61'	4
	P-72	HP12x84	601+35.88	20.46' RT.	652.54	650.88	647.77	627.90	22.98'	4
19	P-73	HP12x84	601+43.38	20.46' RT.	651.90	650.24	647.63	627.90	22.34'	3
	P-74	HP12x84	601+50.88	20.46' RT.	651.26	649.60	647.49	627.90	21.70'	3
	P-75	HP12x84	601+58.38	20.46' RT.	650.63	648.96	647.35	627.75	21.21'	2
	P-76	HP12x84	601+65.88	20.46' RT.	649.99	648.32	647.21	627.60	20.72'	2

DESIGNED -	EXAMINED	DATE -	
CHECKED -	ENGINEER OF BRIDGE DESIGN		
DRAWN -	PASSED	REVISED -	
CHECKED -	ENGINEER OF BRIDGES AND STRUCTURES	REVISED -	

STATE OF ILLINOIS
DEPARTMENT OF TRANSPORTATION

SOLDIER PILE DATA

SHEET 8 OF 13 SHEETS

F.A.S. RTE.	SECTION	COUNTY	TOTAL SHEETS	SHEET NO.
1195	*	KNOX	409	259

CONTRACT NO. 68E50

ILLINOIS | FED. AID PROJECT

12/18/2024 10:23:01 AM

*110RS-5:(111,112,108X-1)W,RS-3

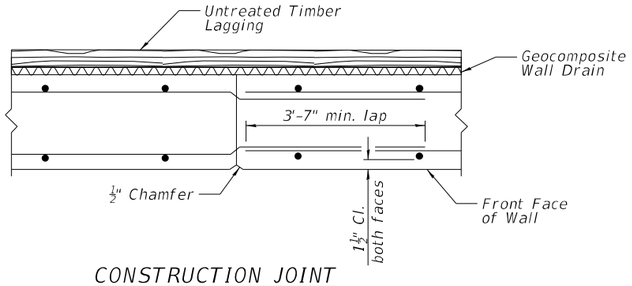

CONSTRUCTION JOINT

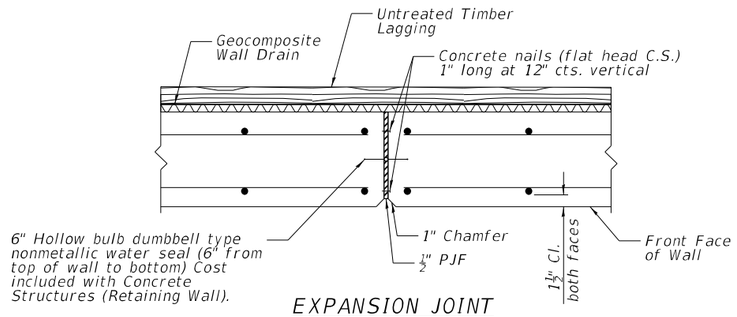

EXPANSION JOINT

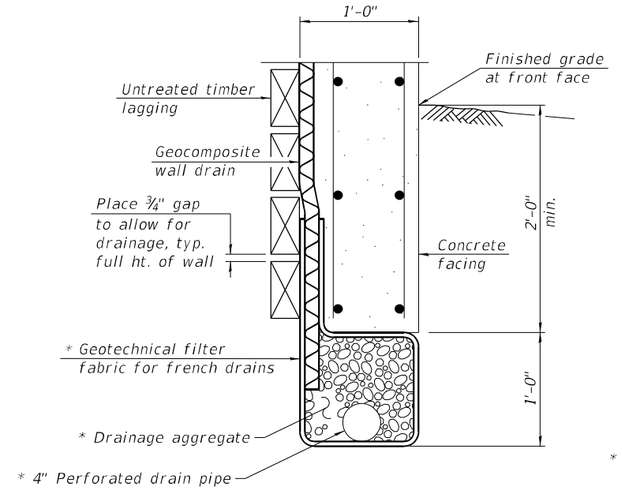

BETWEEN SOLDIER PILES

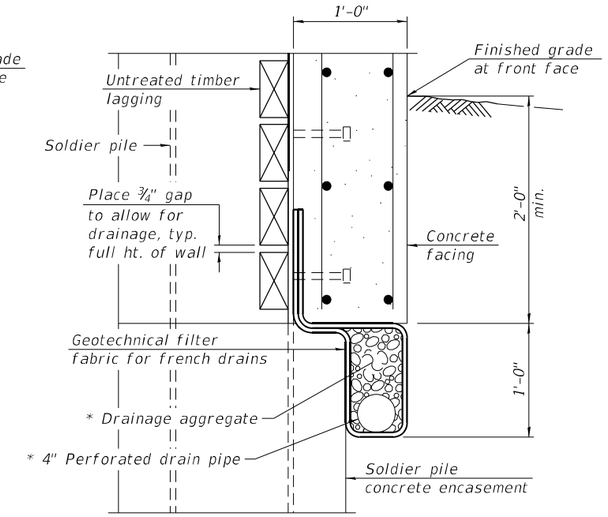

AT SOLDIER PILES

UNDERDRAIN DETAILS FOR SOLDIER PILE WALLS

* Included in the cost of Pipe Underdrains for Structures.

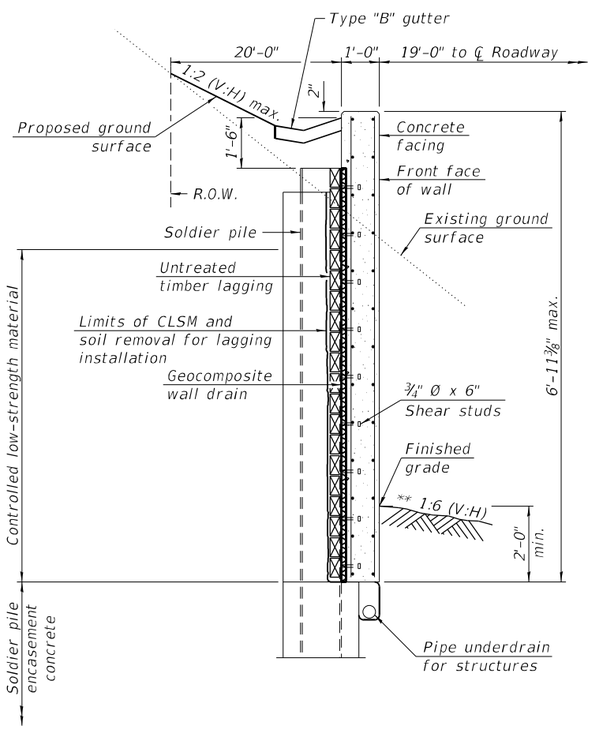

** Slope varies to 1:2⅓ (V:H) at North end of Retaining Wall

TYPICAL SECTION THRU DRILLED SOLDIER PILE WALL

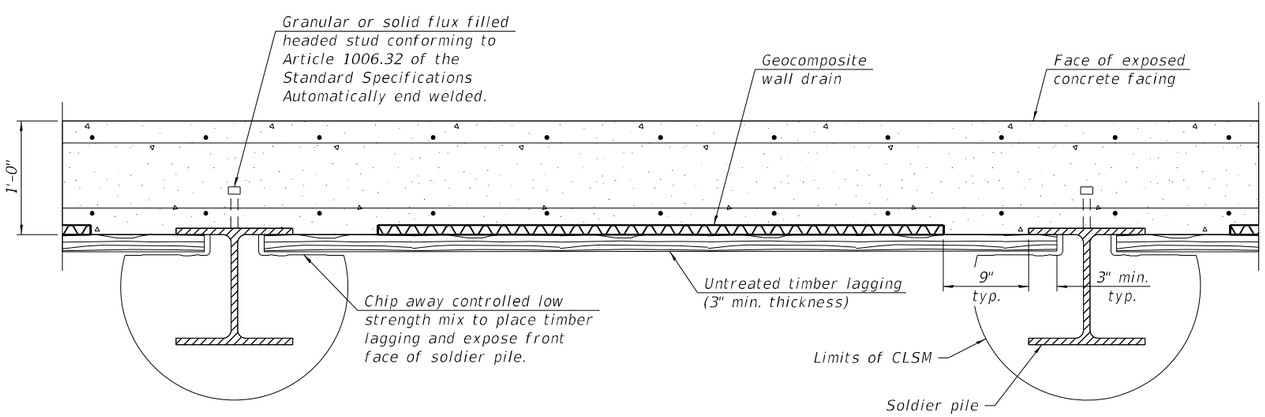

TYPICAL SECTION THRU DRILLED SOLDIER PILE WALL

MODEL: GPE SHT
FILE NAME: pw:\\terraeng-pw.bentley.com:terraeng-pw-01\Documents\Projects\2023\23-238-007 D4 Cloba IL 180\Design\100 - Drawings\CADD\Sheets\D468E50-SHT-GPE-RW597-TRA-009.dgn

DESIGNED -	EXAMINED	DATE -	
CHECKED -	ENGINEER OF BRIDGE DESIGN		
DRAWN -	PASSED	REVISED -	
CHECKED -	ENGINEER OF BRIDGES AND STRUCTURES	REVISED -	

STATE OF ILLINOIS
DEPARTMENT OF TRANSPORTATION

RETAINING WALL SECTIONS & DETA

SHEET 9 OF 13 SHEETS

F.A.S. RTE.	SECTION	COUNTY	TOTAL SHEETS	SHEET NO.
1195	*	KNOX	409	260

CONTRACT NO. 68E50

ILLINOIS | FED. AID PROJECT

12/18/2024 10:23:05 AM

*110RS-5:(111,112,108X-1)W,RS-3

TOTAL BILL OF BARS

Bar	No.	Size	Length	Shape
h100(E)	148	#5	33'-7"	
h101(E)	90	#5	29'-8"	
h102(E)	40	#5	32'-2"	
h103(E)	16	#5	28'-3"	
h104(E)	2	#5	9'-5"	
v100(E)	25	#4	11'-1"	
v101(E)	31	#4	11'-11"	
v102(E)	31	#4	12'-0"	
v103(E)	31	#4	11'-11"	
v104(E)	30	#4	12'-3"	
v105(E)	60	#4	12'-11"	
v106(E)	31	#4	12'-2"	
v107(E)	31	#4	11'-3"	
v108(E)	31	#4	10'-7"	
v109(E)	62	#4	10'-4"	
v110(E)	31	#4	10'-10"	
v111(E)	31	#4	11'-7"	
v112(E)	31	#4	12'-1"	
v113(E)	31	#4	12'-4"	
v114(E)	31	#4	10'-6"	
v115(E)	31	#4	6'-6"	
v116(E)	62	#4	5'-11"	
v117(E)	6	#4	8'-3"	

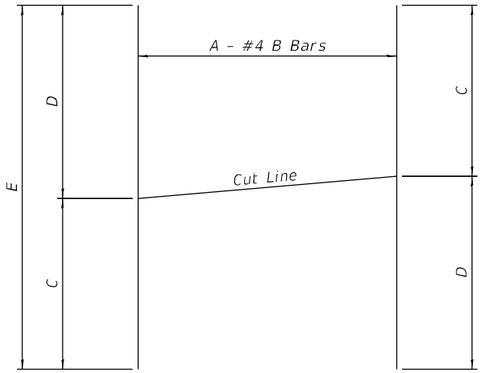

BAR CUTTING DIAGRAM

Order bars full length. Cut as shown and use remainder of bars in opposite face of panel.

BAR CUTTING TABLE

A	B	C	D	E	Panel
25	v100(E)	5'-4"	5'-9"	11'-1"	1
31	v101(E)	5'-10"	6'-1"	11'-11"	2
31	v102(E)	5'-11"	6'-1"	12'-0"	3
31	v103(E)	5'-11"	6'-0"	11'-11"	5
30	v104(E)	6'-0"	6'-3"	12'-3"	6
30	v105(E)	6'-3"	6'-8"	12'-11"	7
30	v105(E)	6'-3"	6'-8"	12'-11"	8
31	v106(E)	5'-11"	6'-3"	12'-2"	9
31	v107(E)	5'-4"	5'-11"	11'-3"	10
31	v108(E)	5'-3"	5'-4"	10'-7"	11
31	v109(E)	5'-1"	5'-3"	10'-4"	12
31	v109(E)	5'-1"	5'-3"	10'-4"	13
31	v110(E)	5'-3"	5'-7"	10'-10"	14
31	v111(E)	5'-7"	6'-0"	11'-7"	15
31	v112(E)	6'-0"	6'-1"	12'-1"	16
31	v113(E)	6'-1"	6'-3"	12'-4"	17
31	v114(E)	4'-3"	6'-3"	10'-6"	18
31	v115(E)	2'-3"	4'-3"	6'-6"	19
6	v117(E)	3'-3"	5'-0"	8'-3"	1

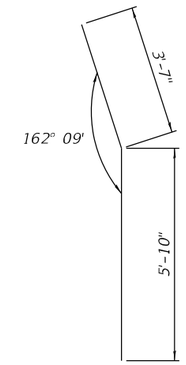

BAR h104(E)

MODEL: PLAN + EL
FILE NAME: pw:\\terraeng-pw.bentley.com:terraeng-pw-01\Documents\Projects\2023\23-238-007 D4 Cierba IL 180\Design\100 - Drawings\CADD\Sheets\D468E50-SHT-GPE-RW597-TRA-010.dgn

DESIGNED -	EXAMINED	DATE -	
CHECKED -	ENGINEER OF BRIDGE DESIGN		
DRAWN -	PASSED	REVISED -	
CHECKED -	ENGINEER OF BRIDGES AND STRUCTURES	REVISED -	

STATE OF ILLINOIS
DEPARTMENT OF TRANSPORTATION

BILL OF BARS & BAR CUTTING DIA

SHEET 10 OF 13 SHEETS

F.A.S. RTE.	SECTION	COUNTY	TOTAL SHEETS	SHEET NO.
1195	*	KNOX	409	261
		CONTRACT NO. 68E50		
		ILLINOIS	FED. AID PROJECT	

12/18/2024 10:23:09 AM

*110RS-5;(111,112,108X-1)W,RS-3

rubino ENGINEERING INC.

Rubino Engineering, Inc.
425 Shepard Drive
Elgin, IL 60123
Telephone: 847-931-1555
Fax: 847-931-1560

LOG OF BORING B-01

Sheet 1 of 1

Rubino Job No.:	G23.183	Drilling Method:	2 ¼ Hollow Stem Auger	WATER LEVELS***	
Project:	FAS 1195 (IL 180) Retaining Wall	Sampling Method:	Split Spoon	While Drilling	16 ft
Location:	IL 180 south of Knox Rd 1750 N	Hammer Type:	Automatic	Upon Completion	N/A
City, State:	Knox County, Illinois	Boring Location:	SB grassy ROW of IL 180	Delay	N/A
Client:	Ciorba Group, Inc.		3 feet W from edge of pavement		

Station: 596+55.72
Offset: 12.99

Surface Elev.: 638.8 ft

Elevation (feet)	Depth, (feet)	Sample No.	Recovery (inches)	MATERIAL DESCRIPTION	Classification	SPT Blows per 6-inch	Moisture, %	Additional Remarks
	0			Approximately 6 inches of TOPSOIL: dark brown silty clay, with roots and organic matter				
		1	14	Very stiff, brown CLAY LOAM, trace gravel	CL	4-5-9 N=14	15	Qp=3.0 P tsf
635		2	17	Hard, brown SILTY CLAY, trace sand and gravel		4-7-13 N=20	19	Qp=4.5 P tsf
	5	3	16		CL	7-10-11 N=21	17	Qr=3.4 S tsf Qp=4.5 P tsf
630		4	12	Very weak, gray laminated SHALE **Commenced MSPT**		100/20"--	10	>>qu****=5.7 ksf
	10	5	5	Very weak, black, laminated SHALE		10/20"--	13	>>4% Organic Content
625		6	21	Very weak, black, fissiled, organic rich SHALE		50/24"--	15	>>qu****=3.3 ksf 33% Organic Content
	15	7	23	Very weak, black, low-grade COAL (Lignite) with gray clay inseams		70/23"--	31	>>qu****=3.9 ksf 27% Organic Content
620		8	14	Very weak, black, laminated SHALE		100/22"--	18	>>qu****=17.2 ksf 3% Organic Content
	20			End of boring at approximately 20¼ feet below existing grade.				

STANDARD PENETRATION TEST DATA — Moisture (0, 25, 50); PL; LL
STRENGTH, tsf — Qu (Rimac) ✳Qp/Qr (0, 2.0, 4.0)

Completion Depth:	20.3 ft	Sample Types:	Pressuremeter, Shelby Tube, Auger Cutting, Split-Spoon, Grab Sample, Rock Core, No Recovery
Date Boring Started:	11/30/23		
Date Boring Completed:	11/30/23		
Logged By:	P.P.		
Drilling Contractor:	Rubino Engineering, Inc.		

Latitude: 40.964301
Longitude: -90.014064
Drill Rig: Geoprobe 7822DT
Remarks: Hole collapse at ~17 feet BEG
Log Entry: J. Ignarski
Checked By: A. Tomaras

The stratification lines represent approximate boundaries. The transition may be gradual.
***Please reference the geotechnical report text for specific groundwater / dewatering recommendations.
****Per the IDOT MSPT Spreadsheet BBS139

rubino ENGINEERING INC.

Rubino Engineering, Inc.
425 Shepard Drive
Elgin, IL 60123
Telephone: 847-931-1555
Fax: 847-931-1560

LOG OF BORING B-02

Sheet 1 of 1

Rubino Job No.:	G23.183	Drilling Method:	2 ¼ Hollow Stem Auger	WATER LEVELS***	
Project:	FAS 1195 (IL 180) Retaining Wall	Sampling Method:	Split Spoon	While Drilling	N/A
Location:	IL 180 south of Knox Rd 1750 N	Hammer Type:	Automatic	Upon Completion	N/A
City, State:	Knox County, Illinois	Boring Location:	SB grassy ROW of IL 180	Delay	N/A
Client:	Ciorba Group, Inc.		2 feet W from edge of pavement		

Station: 597+28.94
Offset: 12.30

Surface Elev.: 642.83 ft

Elevation (feet)	Depth, (feet)	Sample No.	Recovery (inches)	MATERIAL DESCRIPTION	Classification	SPT Blows per 6-inch	Moisture, %	Additional Remarks
	0			Approximately 4 inches of TOPSOIL: dark brown silty clay, with roots and organic matter				
		1	10	Very stiff to hard, brown CLAY LOAM and gravel		5-8-8 N=16	14	
640		2	12		CL	8-8-8 N=16	17	Qp=4.5 P tsf
	5	3	11	Stiff, brown CLAY LOAM and gravel	CL	6-7-7 N=14	15	Qp=1.8 P tsf
635		4	12	Medium dense, brown SANDY LOAM and gravel	SM	9-7-10 N=17	19	
	10	5	10	Very weak, brown and gray, laminated SHALE		8-9-11 N=20	18	
630		6	17	**Commenced MSPT** *Color transitions from brown and gray to gray at approximately 13½ feet BEG*		100/17"--	11	>>qu****=9.6 ksf
	15	7	20	Very weak, dark gray, organic rich, laminated SHALE		100/24"--	12	>>qu****=5.3 ksf 6% Organic Content
625		8	20	Very weak, black, fissiled, organic rich SHALE		100/28"--	14	>>qu****=6.7 ksf 32% Organic Content
	20			End of boring at approximately 20¾ feet below existing grade.				

STANDARD PENETRATION TEST DATA — Moisture (0, 25, 50); PL; LL
STRENGTH, tsf — Qu (Rimac) ✳Qp/Qr (0, 2.0, 4.0)

Completion Depth:	20.8 ft	Sample Types:	Pressuremeter, Shelby Tube, Auger Cutting, Split-Spoon, Grab Sample, Rock Core, No Recovery
Date Boring Started:	12/1/23		
Date Boring Completed:	12/1/23		
Logged By:	P.P.		
Drilling Contractor:	Rubino Engineering, Inc.		

Latitude: 40.964100
Longitude: -90.014062
Drill Rig: Geoprobe 7822DT
Remarks: Hole collapse at ~14 feet BEG
Log Entry: J. Ignarski
Checked By: A. Tomaras

The stratification lines represent approximate boundaries. The transition may be gradual.
***Please reference the geotechnical report text for specific groundwater / dewatering recommendations.
****Per the IDOT MSPT Spreadsheet BBS139

rubino ENGINEERING INC.

Rubino Engineering, Inc.
425 Shepard Drive
Elgin, IL 60123
Telephone: 847-931-1555
Fax: 847-931-1560

LOG OF BORING B-03

Sheet 1 of 1

Rubino Job No.:	G23.183	Drilling Method:	2 ¼ Hollow Stem Auger
Project:	FAS 1195 (IL 180) Retaining Wall	Sampling Method:	Split Spoon
Location:	IL 180 south of Knox Rd 1750 N	Hammer Type:	Automatic
City, State:	Knox County, Illinois	Boring Location:	SB grassy ROW of IL 180
Client:	Ciorba Group, Inc.		3 feet W from edge of pavement

WATER LEVELS***

While Drilling	N/A
Upon Completion	N/A
Delay	N/A

Station: 597+94.16
Offset: 11.90

Surface Elev.: 645.56 ft

Elevation (feet)	Depth (feet)	Sample Type	Sample No.	Recovery (inches)	MATERIAL DESCRIPTION	Classification	SPT Blows per 6-inch	Moisture, %	Additional Remarks
645	0				Approximately 4 inches of TOPSOIL: dark brown silty clay, with roots and organic matter				
					FILL: gray gravel				
			1	0	Stiff, brown SILTY CLAY LOAM, little gravel *No recovery. Soils classified from auger cuttings*	CL	5-3-6 N=9	15	
			2	14	Very stiff to hard, brown SILTY CLAY LOAM and gravel		8-11-12 N=23	13	Qp=4.5 P tsf
640	5		3	15			5-8-10 N=18	8	
			4	14		CL	7-10-9 N=19	14	
635	10		5	4			28-18-20 N=38	14	
			6	18	**Commenced MSPT** Very weak, brown, laminated SHALE		100/23"--	13	>>qu****=6.6 ksf
630	15		7	14	*Color transitions from brown to gray at approximately 16 feet BEG*		100/23"--	19	>>qu****=6.7 ksf
			8	10			100/10"--	9	>>qu****=17.2 ksf
					End of boring at approximately 19¼ feet below existing grade.				

STANDARD PENETRATION TEST DATA
Moisture (0–25–50); PL; LL
STRENGTH, tsf: Qu (Rimac) ✳Qp/Qr (0–2.0–4.0)

Completion Depth:	19.3 ft	Sample Types:	Pressuremeter	Latitude: 40.963921
Date Boring Started:	11/30/23	Auger Cutting	Shelby Tube	Longitude: -90.014061
Date Boring Completed:	11/30/23	Split-Spoon	Grab Sample	Drill Rig: Geoprobe 7822DT
Logged By:	P.P.	Rock Core	No Recovery	Remarks: Hole collapse at ~15 feet BEG
Drilling Contractor:	Rubino Engineering, Inc.			Log Entry: J. Ignarski
				Checked By: A. Tomaras

The stratification lines represent approximate boundaries. The transition may be gradual.
***Please reference the geotechnical report text for specific groundwater / dewatering recommendations.
****Per the IDOT MSPT Spreadsheet BBS139

rubino ENGINEERING INC.

Rubino Engineering, Inc.
425 Shepard Drive
Elgin, IL 60123
Telephone: 847-931-1555
Fax: 847-931-1560

LOG OF BORING B-04

Sheet 1 of 1

Rubino Job No.:	G23.183	Drilling Method:	2 ¼ Hollow Stem Auger
Project:	FAS 1195 (IL 180) Retaining Wall	Sampling Method:	Split Spoon
Location:	IL 180 south of Knox Rd 1750 N	Hammer Type:	Automatic
City, State:	Knox County, Illinois	Boring Location:	SB grassy ROW of IL 180
Client:	Ciorba Group, Inc.		2 feet W from edge of pavement

WATER LEVELS***

While Drilling	N/A
Upon Completion	N/A
Delay	N/A

Station: 598+47.02
Offset: 10.38

Surface Elev.: 647.39 ft

Elevation (feet)	Depth (feet)	Sample Type	Sample No.	Recovery (inches)	MATERIAL DESCRIPTION	Classification	SPT Blows per 6-inch	Moisture, %	Additional Remarks
	0				Approximately 6 inches of TOPSOIL: dark brown silty clay, with roots and organic matter				
645			1	14	Stiff, brown SILTY CLAY, trace sand and gravel		3-5-6 N=11	13	Qr=0.8 S tsf Qp=4.5 P tsf
			2	16		CL	5-6-8 N=14	12	Qr=1.6 B tsf
	5		3	13	Very stiff to hard, brown SILTY CLAY, trace sand and gravel		5-6-7 N=13	13	Qp=4.5 P tsf
640			4	13		CL	4-4-4 N=8	19	Qp=2.0 P tsf
	10		5	8	Very weak, brown, laminated SHALE		6-7-7 N=14	18	
635			6	26	**Commenced MSPT**		70/26"--	18	>>qu****=5.1 ksf
	15		7	19	*Color transitions from brown to gray at approximately 16 feet BEG*		100/19"--	11	>>qu****=8.6 ksf
630			8	10	*Color transitions from gray to brown at approximately 18½ feet BEG*		100/20"--	13	>>qu****=6.4 ksf
	20				End of boring at approximately 20¼ feet below existing grade.				

STANDARD PENETRATION TEST DATA
Moisture (0–25–50); PL; LL
STRENGTH, tsf: Qu (Rimac) ✳Qp/Qr (0–2.0–4.0)

Completion Depth:	20.0 ft	Sample Types:	Pressuremeter	Latitude: 40.963721
Date Boring Started:	12/1/23	Auger Cutting	Shelby Tube	Longitude: -90.014056
Date Boring Completed:	12/1/23	Split-Spoon	Grab Sample	Drill Rig: Geoprobe 7822DT
Logged By:	P.P.	Rock Core	No Recovery	Remarks: Hole collapse at ~17 feet BEG
Drilling Contractor:	Rubino Engineering, Inc.			Log Entry: J. Ignarski
				Checked By: A. Tomaras

The stratification lines represent approximate boundaries. The transition may be gradual.
***Please reference the geotechnical report text for specific groundwater / dewatering recommendations.
****Per the IDOT MSPT Spreadsheet BBS139

MODEL: PLAN + EL
FILE NAME: pw:\\terraeng-pw.bentley.com:terraeng-pw-01\Documents\Projects\2023\23-238-007 D4 Ciorba IL 180\Design\100 - Drawings\CADD\Sheets\D468E50-SHT-GPE-RW597-TRA-012.dgn

DESIGNED -	EXAMINED	DATE -	
CHECKED -	ENGINEER OF BRIDGE DESIGN		
DRAWN -	PASSED	REVISED -	
CHECKED -	ENGINEER OF BRIDGES AND STRUCTURES	REVISED -	

12/18/2024 10:23:20 AM

STATE OF ILLINOIS
DEPARTMENT OF TRANSPORTATION

SOIL BORING LOGS II

SHEET 12 OF 13 SHEETS

F.A.S. RTE.	SECTION	COUNTY	TOTAL SHEETS	SHEET NO.
1195	*	KNOX	409	263

CONTRACT NO. 68E50

ILLINOIS | FED. AID PROJECT

*110RS-5:(111,112,108X-1)W,RS-3

rubino ENGINEERING INC.

Rubino Engineering, Inc.
425 Shepard Drive
Elgin, IL 60123
Telephone: 847-931-1555
Fax: 847-931-1560

LOG OF BORING B-05

Sheet 1 of 1

Rubino Job No.:	G23.183	Drilling Method:	2 ¼ Hollow Stem Auger	WATER LEVELS***	
Project:	FAS 1195 (IL 180) Retaining Wall	Sampling Method:	Split Spoon	While Drilling	N/A
Location:	IL 180 south of Knox Rd 1750 N	Hammer Type:	Automatic	Upon Completion	N/A
City, State:	Knox County, Illinois	Boring Location:	SB grassy ROW of IL 180	Delay	N/A
Client:	Ciorba Group, Inc.		2 feet W from edge of pavement		

Station: 599+54.46
Offset: 12.42

Surface Elev.: 649.91 ft

Elevation (feet)	Depth, (feet)	Sample Type	Sample No.	Recovery (inches)	MATERIAL DESCRIPTION	Classification	SPT Blows per 6-inch	Moisture, %	Additional Remarks
	0				Approximately 6 inches of TOPSOIL: dark brown silty clay, with roots and organic matter				
			1	15	Very stiff to hard, brown SILTY CLAY, trace sand and gravel	CL	4-5-8 N=13	11	Qp=4.5 P tsf
			2	16			7-8-12 N=20	12	Qp=4.5 P tsf
645	5		3	18			7-11-12 N=23	11	Qr=2.1 S tsf Qp=4.5 P tsf
			4	18			8-12-10 N=22	8	Qp=4.5 P tsf
640	10				Medium dense, brown SAND, trace to little gravel	SW			
			5	18			3-5-6 N=11	5	
			6	14			5-6-7 N=13	4	
635	15								
			7	13	Medium dense, brown SILTY LOAM, some gravel	SM	4-5-8 N=13	26	1% Organic Content
			8	14	Very weak, brown and gray, laminated SHALE		12-31-50/2"	14	
					Spoon refusal at approximately 19¾ feet below existing grade. End of boring at approximately 19¾ feet below existing grade.				

STANDARD PENETRATION TEST DATA — Moisture (0, 25, 50); PL; LL
STRENGTH, tsf — Qu (Rimac) ✳Qp/Qr (0, 2.0, 4.0)

Completion Depth:	19.7 ft	Sample Types:	Pressuremeter	Latitude: 40.963481
Date Boring Started:	11/30/23	Auger Cutting	Shelby Tube	Longitude: -90.014064
Date Boring Completed:	11/30/23	Split-Spoon	Grab Sample	Drill Rig: Geoprobe 7822DT
Logged By:	P.P.	Rock Core	No Recovery	Remarks: Hole collapse at ~14 feet BEG
Drilling Contractor:	Rubino Engineering, Inc.			Log Entry: J. Ignarski
				Checked By: A. Tomaras

The stratification lines represent approximate boundaries. The transition may be gradual.
***Please reference the geotechnical report text for specific groundwater / dewatering recommendations.
****Per the IDOT MSPT Spreadsheet BBS139

rubino ENGINEERING INC.

Rubino Engineering, Inc.
425 Shepard Drive
Elgin, IL 60123
Telephone: 847-931-1555
Fax: 847-931-1560

LOG OF BORING B-06

Sheet 1 of 1

Rubino Job No.:	G23.183	Drilling Method:	2 ¼ Hollow Stem Auger	WATER LEVELS***	
Project:	FAS 1195 (IL 180) Retaining Wall	Sampling Method:	Split Spoon	While Drilling	N/A
Location:	IL 180 south of Knox Rd 1750 N	Hammer Type:	Automatic	Upon Completion	N/A
City, State:	Knox County, Illinois	Boring Location:	SB grassy ROW of IL 180	Delay	N/A
Client:	Ciorba Group, Inc.		4 feet W from edge of pavement		

Station: 600+45.55
Offset: 14.73

Surface Elev.: 651.36 ft

Elevation (feet)	Depth, (feet)	Sample Type	Sample No.	Recovery (inches)	MATERIAL DESCRIPTION	Classification	SPT Blows per 6-inch	Moisture, %	Additional Remarks
	0				Approximately 6 inches of TOPSOIL: dark brown silty clay, with roots and organic matter				
650			1	15	Stiff to very stiff, brown SILTY CLAY, trace sand and gravel	CL	2-3-7 N=10	13	Qr=2.5 B tsf
			2	14			3-7-10 N=17	12	Qr=2.0 S tsf
645	5		3	18			7-7-6 N=13	15	Qr=1.2 S tsf Qp=4.5 P tsf
			4	15	Very loose, brown SAND, trace gravel	SW	3-2-1 N=3	6	
640	10		5	18			0-1-2 N=3	12	Qr=0.8 B tsf Qp=2.0 P tsf
					Medium stiff to stiff, brown SILTY CLAY, trace sand and gravel	CL			
			6	16	Medium dense, brown SANDY LOAM, little gravel	SM	4-10-14 N=24	12	
635	15		7	18	Very weak, brown, laminated SHALE		14-35-46 N=81	14	>>◎
			8	11	*Color transitions from gray to brown at approximately 18½ feet BEG*		30-50/5"-	11	>>◎
					Spoon refusal at approximately 19½ feet below existing grade. End of boring at approximately 19½ feet below existing grade.				

STANDARD PENETRATION TEST DATA — Moisture (0, 25, 50); PL; LL
STRENGTH, tsf — Qu (Rimac) ✳Qp/Qr (0, 2.0, 4.0)

Completion Depth:	19.4 ft	Sample Types:	Pressuremeter	Latitude: 40.963231
Date Boring Started:	11/30/23	Auger Cutting	Shelby Tube	Longitude: -90.014073
Date Boring Completed:	11/30/23	Split-Spoon	Grab Sample	Drill Rig: Geoprobe 7822DT
Logged By:	P.P.	Rock Core	No Recovery	Remarks: Hole collapse at ~15 feet BEG
Drilling Contractor:	Rubino Engineering, Inc.			Log Entry: J. Ignarski
				Checked By: A. Tomaras

The stratification lines represent approximate boundaries. The transition may be gradual.
***Please reference the geotechnical report text for specific groundwater / dewatering recommendations.
****Per the IDOT MSPT Spreadsheet BBS139

MODEL: PLAN + EL
FILE NAME: pw:\\terraeng-pw.bentley.com:terraeng-pw-01\Documents\Projects\2023\23-238-007 D4 Ciorba IL 180\Design\100 - Drawings\CADD\Sheets\D468E50-SHT-GPE-RW597-TRA-013.dgn

DESIGNED -	EXAMINED	DATE -	STATE OF ILLINOIS DEPARTMENT OF TRANSPORTATION	SOIL BORING LOGS III
CHECKED -	ENGINEER OF BRIDGE DESIGN			
DRAWN -	PASSED	REVISED -		SHEET 13 OF 13 SHEETS
CHECKED -	ENGINEER OF BRIDGES AND STRUCTURES	REVISED -		

F.A.S. RTE.	SECTION	COUNTY	TOTAL SHEETS	SHEET NO.
1195	*	KNOX	409	264
		CONTRACT NO. 68E50		
		ILLINOIS	FED. AID PROJECT	

12/18/2024 10:23:27 AM

*110RS-5:(111,112,108X-1)W,RS-3

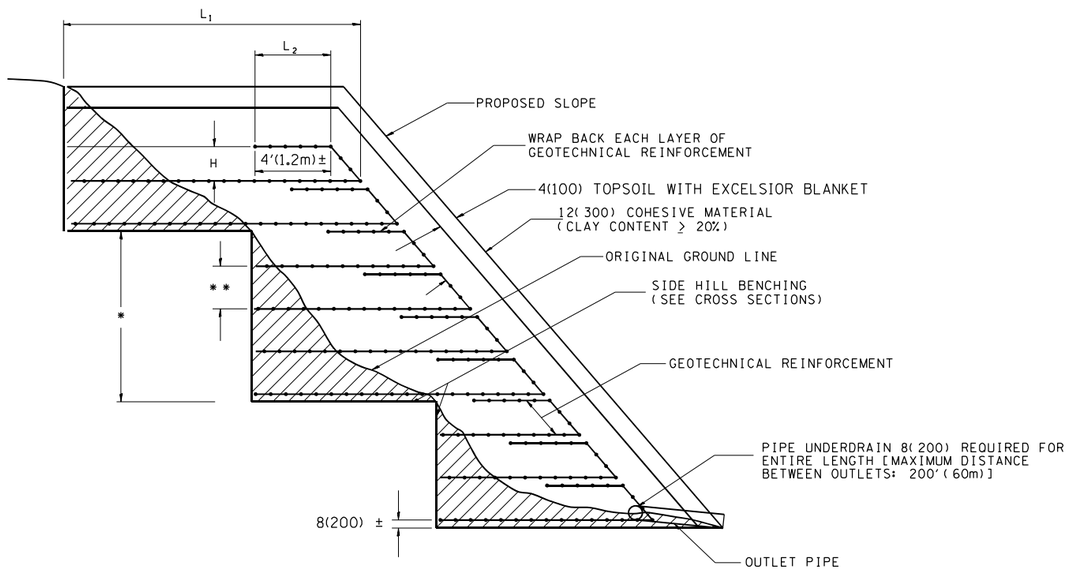

ALTERNATE I: BACKFILL WITH GRANULAR MATERIAL

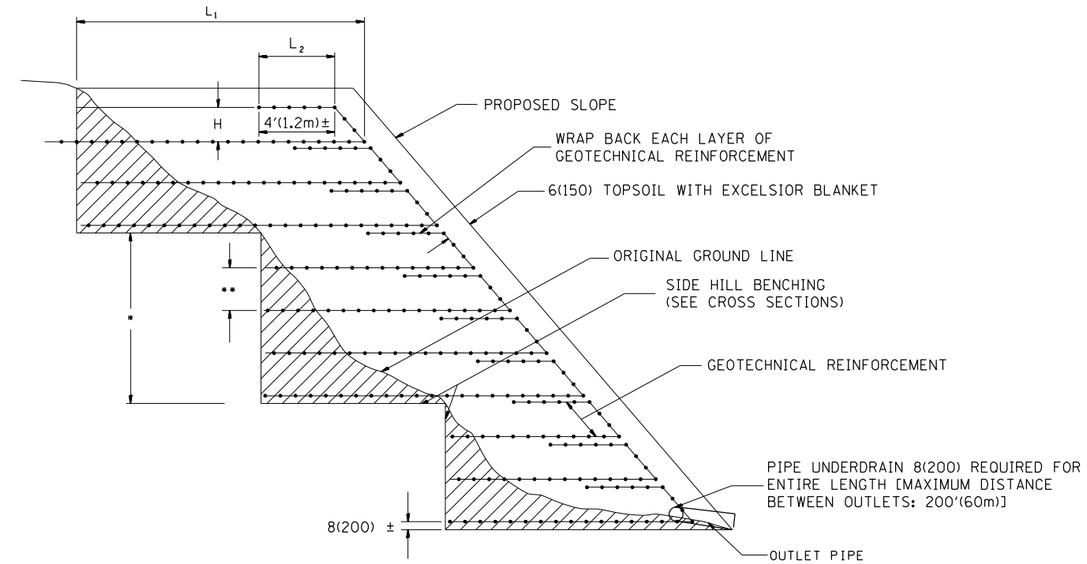

ALTERNATE II: BACKFILL WITH COHESIVE MATERIAL

GEOTECHNICAL REINFORCEMENT LOCATIONS

STATION TO STATION	SIDE	SQ YDS (m)^2
TOTAL QUANTITY		

GENERAL NOTES:

1. BENCHING:
   Shall be performed to the dimensions as shown on the plans and in accordance with the applicable portions of article 205.03 of the Standard Specifications.

2. GEOTECHNICAL REINFORCEMENT:
   Shall be lapped up to and just below the next higher Geogrid Layer.

MEASUREMENT FORMULA

$$(L_1 + L_2 + H) \times \text{LENGTH CONSTRUCTED} = \text{PAYMENT AREA PER LAYER}$$

All dimensions are in inches (millimeters) unless otherwise noted.

1-1-97	RENUM. L-5.02, NEW REVISION BOX, REVISED TITLE	T.P.
	BOX, REVISED DESIGNER NOTES, REVISED GENERAL	
	NOTES.	
10-16-06	REVISED TO 2007 SPEC.	M.A.

STATE OF ILLINOIS
DEPARTMENT OF TRANSPORTATION

GEOTECHNICAL REINFORCEMENT FOR SIDE SLOPES

NOT TO SCALE

F.A. RTE.	SECTION	COUNTY	TOTAL SHEETS	SHEET NO.
		CONTRACT NO.		
FED. ROAD DIST. NO.	ILLINOIS	FED. AID PROJECT		

CiorbaGroup
8725 W. Higgins Rd, Ste 600, Chicago, IL 60631
P 773.775.4009 | www.ciorba.com

USER NAME = Roadway	DESIGNED - AEC	REVISED -
	DRAWN - AMS	REVISED -
PLOT SCALE = 105.0104 ' / in.	CHECKED - NDF	REVISED -
PLOT DATE = 12/18/2024	DATE - 5/31/2024	REVISED -

STATE OF ILLINOIS
DEPARTMENT OF TRANSPORTATION

IL 180 WIDENING AND RESURFACING
IDOT DISTRICT 4 STANDARD DETAILS

SCALE: SHEET OF SHEETS STA. TO STA.

F.A.S. RTE.	SECTION	COUNTY	TOTAL SHEETS	SHEET NO.
1195	*	KNOX	409	265
* 110RS-5:(111,112,108X-1)W,RS-3		CONTRACT NO. 68E50		
		ILLINOIS	FED. AID PROJECT	

DATE PLOTTED = 12/18/2024 10:50:13 AM
PENT TABLE = 0021484_07.tbl
PLOT CONFIG = CGI-PDF.pltcfg
MODEL: $MODELNAME$
FILE NAME: N:\PROJ\0021484_07\CADD\ShtDetails\0468E50-DETA1.dgn

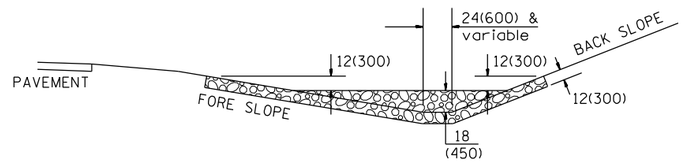

SECTION A - A

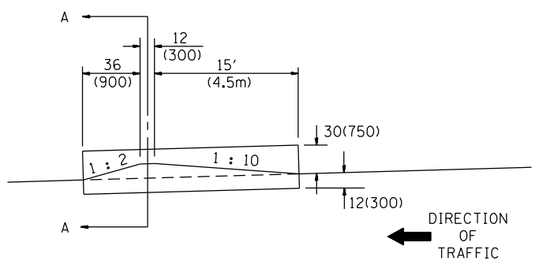

SIDE VIEW
(WITHIN CLEAR ZONE)

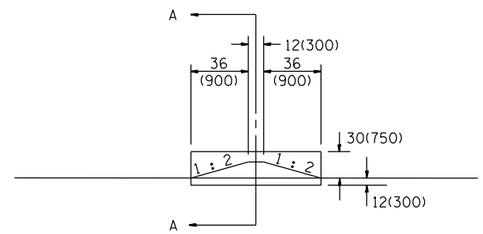

SIDE VIEW
(OUTSIDE OF CLEAR ZONE)

SIDE DITCH AGGREGATE DITCH CHECK

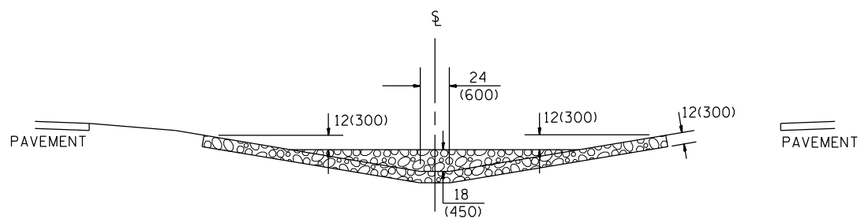

SECTION B - B

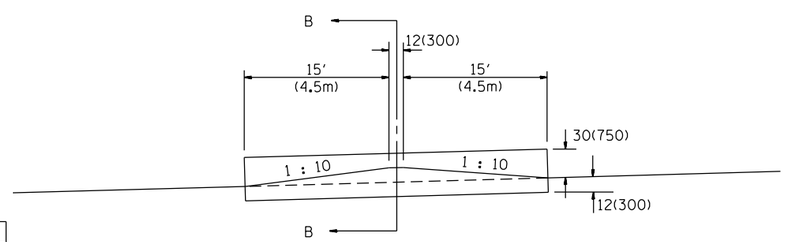

SIDE VIEW

MEDIAN AGGREGATE DITCH CHECK

NOTES:

1. FOR DITCH BOTTOM PROTECTED BY EROSION CONTROL BLANKET, USE 400'(120m) SPACING.
   FOR SEEDED DITCH BOTTOM, USE 200'(60m) SPACING.
2. THIS WORK CONSISTS OF THE COMPLETE INSTALLTION OF EROSION CONTROL DITCH CHECK AT LOCATIONS AS SHOWN ON THE PLANS, OR AS DIRECTED BY THE ENGINEER. THE AGGREGATE GRADATION SHALL BE RR3 WITH A MINIMUM QUALITY OF CLASS B.

LOCATION				NUMBER OF DITCH CHECKS	FORE SLOPE	DITCH BOTTOM WIDTH	BACK SLOPE	BERM SLOPE
STATION	MEDIAN	SIDE DITCH LEFT	SIDE DITCH RIGHT					

ESTIMATE QUANTITIES

	FORE SLOPE	DITCH BOTTOM	BACK SLOPE	BERM SLOPE	AGGREGATE DITCH CHECK EROSION CONTROL TON (METRIC TON)
MEDIAN DITCH	1 : 6	24(600)	—	1 : 10	95(86)
SIDE DITCH	1 : 6	24(600)	1 : 4	1 : 10 & 1 : 2	50(45)
SIDE DITCH	1 : 6	24(600)	1 : 4	1 : 2 & 1 : 2	19(17)
SIDE DITCH	1 : 4	24(600)	1 : 3	1 : 10 & 1 : 2	18(16)
SIDE DITCH	1 : 4	24(600)	1 : 3	1 : 2 & 1 : 2	14(13)

All slope ratios are expressed as units of vertical displacement to units of horizontal displacement (V:H).

All dimensions are in inches (millimeters) unless otherwise noted.

QUANTITIES

CALC. BY: _____ DATE:

CHECKED BY: _____ DATE:

QUANTITY CALCULATIONS ARE ON FILE AT THE DISTRICT 4 OFFICE; BUREAU OF PROJECT IMPLEMENTATION; DOCUMENTATION SECTION

1-1-97	RENUM. A-12.04, NEW REVISION BOX, REVISED TITLE BOX, ADDED QUANTITY CALCULATION BOX	T.P.
9-15-05	REVISED DESIGNER NOTE	M.A.
10-16-06	REVISED RR3 QUALITY & TO 2007 SPEC.	M.A.
03-15-12	CHANGED NOTE 1.	R.D.

STATE OF ILLINOIS
DEPARTMENT OF TRANSPORTATION

EROSION CONTROL AGGREGATE DITCH CHECK

NOT TO SCALE — CADD STD. 280101-D4

F.A. RTE.	SECTION	COUNTY	TOTAL SHEETS	SHEET NO.
		CONTRACT NO.		
FED. ROAD DIST. NO.	ILLINOIS	FED. AID PROJECT		

CiorbaGroup
8725 W. Higgins Rd, Ste 600, Chicago, IL 60631
P 773.775.4009 | www.ciorba.com

USER NAME = Roadway	DESIGNED - AEC	REVISED -	
	DRAWN - AMS	REVISED -	
PLOT SCALE = 105.0104 ' / in.	CHECKED - NDF	REVISED -	
PLOT DATE = 12/18/2024	DATE - 5/31/2024	REVISED -	

STATE OF ILLINOIS
DEPARTMENT OF TRANSPORTATION

IL 180 WIDENING AND RESURFACING
IDOT DISTRICT 4 STANDARD DETAILS

SCALE: SHEET OF SHEETS STA. TO STA.

F.A.S. RTE.	SECTION	COUNTY	TOTAL SHEETS	SHEET NO.
1195	*	KNOX	409	266
*	110RS-5:(111,112,108X-1)W,RS-3	CONTRACT NO.		68E50
		ILLINOIS	FED. AID PROJECT	

DATE PLOTTED = 12/18/2024 10:50:14 AM
PLOT TIME = 00:00:00
PLOT CONFIG = CCI-PDF.pltcfg
MODEL: $MODELNAMES
FILE NAME: N:\PROJ\6021484.07\CADD\SHTDetails\D468E50-DETA.dgn

CASE 1
(DITCH)

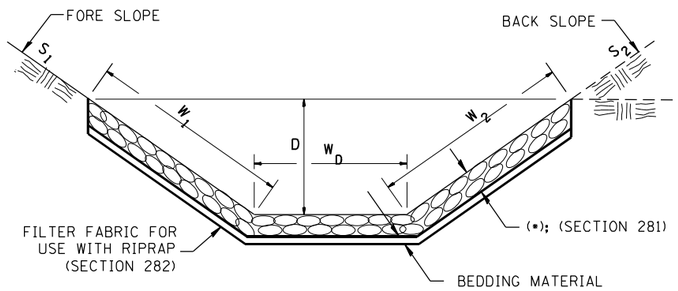

(✳)				
LOCATION	WIDTH (1)	LENGTH	RIPRAP	FABRIC
STA TO STA	lin ft (m)	lin ft (m)	tons (m tons)	sq yds (m^2)
TOTAL				

(1) WIDTH = $W_1 + W_2 + W_D$

CASE 2
(CULVERT & SLOPE)

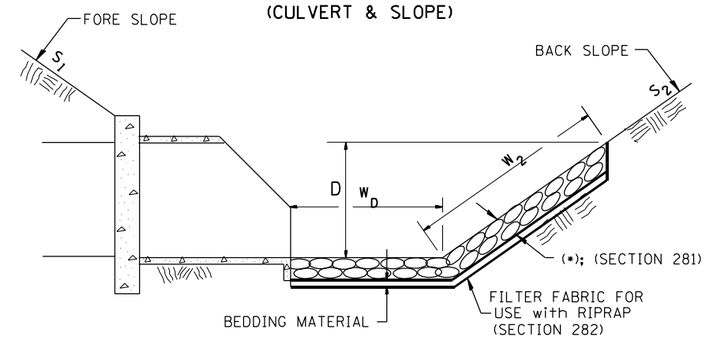

(✳)				
LOCATION	WIDTH (1)	LENGTH	RIPRAP	FABRIC
STA TO STA	lin ft (m)	lin ft (m)	tons (m tons)	sq yds (m^2)
TOTAL				

(1) WIDTH = $W_2 + W_D$

CASE 3
(CULVERT)

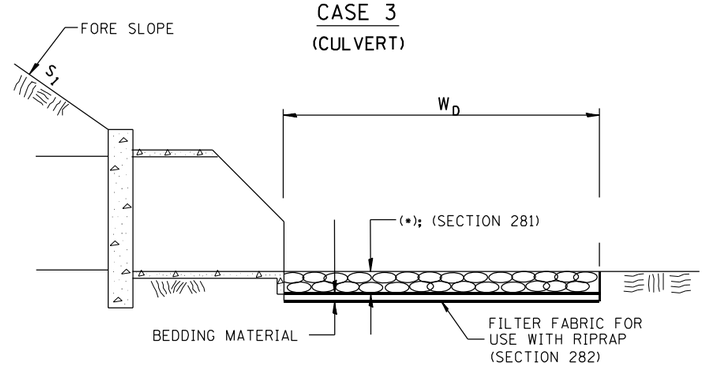

(✳)				
LOCATION	WIDTH (1)	LENGTH	RIPRAP	FABRIC
STA TO STA	lin ft (m)	lin ft (m)	tons (m tons)	sq yds (m^2)
TOTAL				

(1) WIDTH = W_D

All slope ratios are expressed as units of vertical displacement to units of horizontal displacement (V:H).

All dimensions are in inches (millimeters) unless otherwise noted.

1-1-97	RENUM. A-12.02, NEW REVISION BOX	T.P.	
12-1-97	CORRECT FILTER FABRIC LEADER ARROW	J.A.	
10-16-06	REVISED TO 2007 SPEC.	M.A.	
9-6-12	REMOVED A DESIGNER NOTE AND MADE MINOR CHANGES	R.D.	

STATE OF ILLINOIS
DEPARTMENT OF TRANSPORTATION

RIPRAP DITCH FOR EROSION PROTECTION

NOT TO SCALE

F.A.S. RTE.	SECTION	COUNTY	TOTAL SHEETS	SHEET NO.
		CONTRACT NO.		
FED. ROAD DIST. NO.	ILLINOIS	FED. AID PROJECT		

CiorbaGroup
8725 W. Higgins Rd, Ste 600, Chicago, IL 60631
P 773.775.4009 | www.ciorba.com

USER NAME = Roadway	DESIGNED - AEC	REVISED -	
	DRAWN - AMS	REVISED -	
PLOT SCALE = 105.0104 ' / in.	CHECKED - NDF	REVISED -	
PLOT DATE = 12/18/2024	DATE - 5/31/2024	REVISED -	

STATE OF ILLINOIS
DEPARTMENT OF TRANSPORTATION

IL 180 WIDENING AND RESURFACING
IDOT DISTRICT 4 STANDARD DETAILS

SCALE: SHEET OF SHEETS STA. TO STA.

F.A.S. RTE.	SECTION	COUNTY	TOTAL SHEETS	SHEET NO.
1195	*	KNOX	409	267
*	110RS-5;(111,112,108X-1)W,RS-3	CONTRACT NO.		68E50
	ILLINOIS	FED. AID PROJECT		

DATE PLOTTED = 12/18/2024 10:50:14 AM
PRINTED BY = 0070484 (2.2h)
PLOT CONFIG = CCI-PDF.pltcfg
MODEL: $MODEL NAMES
FILE NAME: N:\PROJ\1002 1484.07\CADD\Sht\Details\D468E50-DETB.dgn

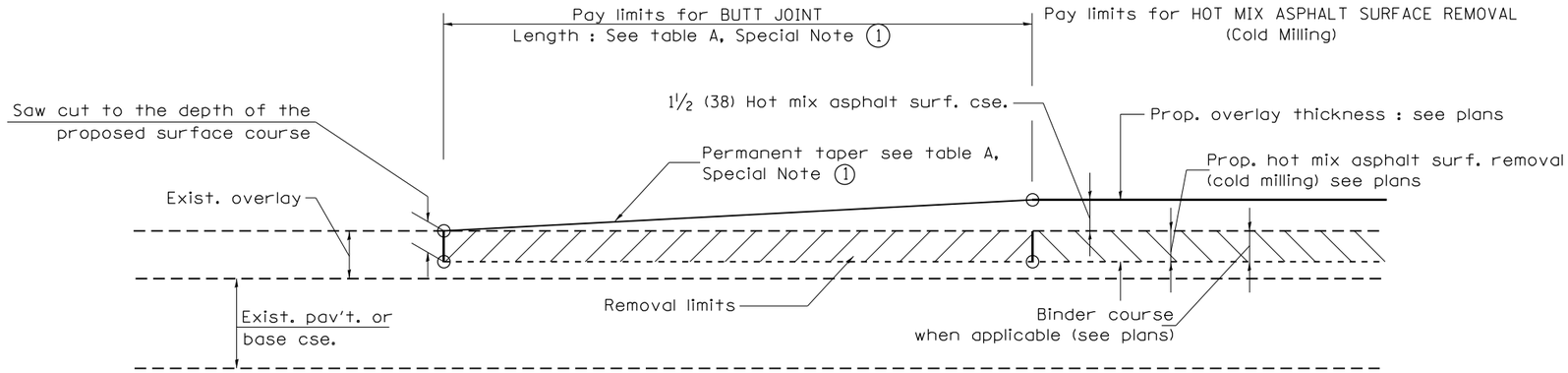

CASE 1 : WITH HOT MIX ASPHALT SURFACE REMOVAL (COLD MILLING)

TABLE A
TAPER RATES

SPECIAL NOTE NUMBER	ELEMENT	MAINLINE INTERSTATES & 4-LANE EXPRESSWAYS	ALL OTHERS
1	BUTT JOINT TAPER RATE	1:480	1:240
2	TEMPORARY RAMP TAPER RATE	1:80	1:40

GENERAL NOTES

1. The work shall be done in accordance with Article 406.08 and the Special Provision for Butt Joints.
2. The pavement surface to be removed may be either bituminous or P.C. concrete. The work shall be performed in accordance with Article 440.04 and the Special Provisions for Butt Joints.
3. The saw cut joints shall be primed just prior to the placing of bituminous material. The work will be in accordance with the applicable portions of Article 406.05.
4. The length of butt joint is based on the taper rate times change in cold milling depth within the butt joint pay limits, unless otherwise indicated.
5. Temporary ramps are paid for separately and not included in the cost of the butt joints.

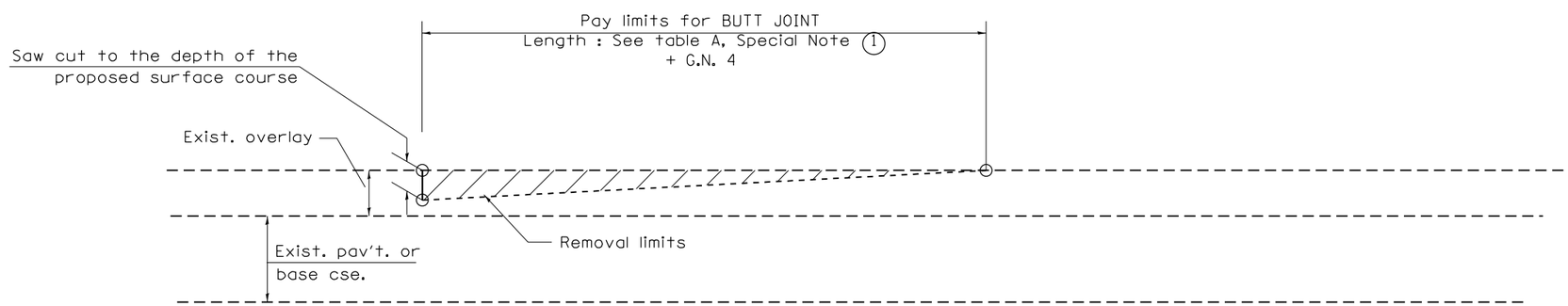

CASE 2 : NO HOT MIX ASPHALT SURFACE REMOVAL (COLD MILLING)

All dimensions are in inches (millimeters) unless otherwise noted.

01-01-97	RENUM. C-23.01, NEW REVISION BOX	T.P.	08-21-13	MAJOR MODIFICATIONS	R.D.
04-01-97	CORRECTION TO DEPTH	J.A.	04-12-16	MINOR CORRECTIONS	R.D.
09-15-05	REVISED DESIGNER NOTE	M.M.A.	02-14-17	ADDED NOTE 5	R.D.
10-16-06	REVISED TO 2007 SPEC.	M.A.	07-16-19	Wording and Spelling corrections	R.D.

STATE OF ILLINOIS
DEPARTMENT OF TRANSPORTATION

BUTT JOINTS

F.A. RTE.	SECTION	COUNTY	TOTAL SHEETS	SHEET NO.
			3	1
		CONTRACT NO.		
FED. ROAD DIST. NO.	ILLINOIS	FED. AID PROJECT		

CiorbaGroup
8725 W. Higgins Rd, Ste 600, Chicago, IL 60631
P 773.775.4009 | www.ciorba.com

USER NAME = Roadway	DESIGNED - AEC	REVISED -	
	DRAWN - AMS	REVISED -	
PLOT SCALE = 105.0398 ' / in.	CHECKED - NDF	REVISED -	
PLOT DATE = 12/18/2024	DATE - 5/31/2024	REVISED -	

STATE OF ILLINOIS
DEPARTMENT OF TRANSPORTATION

IL 180 WIDENING AND RESURFACING
IDOT DISTRICT 4 STANDARD DETAILS

SCALE: SHEET OF SHEETS STA. TO STA.

F.A.S. RTE.	SECTION	COUNTY	TOTAL SHEETS	SHEET NO.
1195	*	KNOX	409	288
* 110RS-5:(111,112,108X-1)W,RS-3		CONTRACT NO. 68E50		
		ILLINOIS	FED. AID PROJECT	

DATE PLOTTED = 12/18/2024 10:50:15 AM
PLOT SCALE = 0.0210 ' / in.
PLOT CONFIG = CGI-PDF.pltcfg
MODEL: $MODEL$NAME$
FILE NAME: N:\PROJ\0021484,07\CADD\ShtDetails\0468E50-DETC.dgn

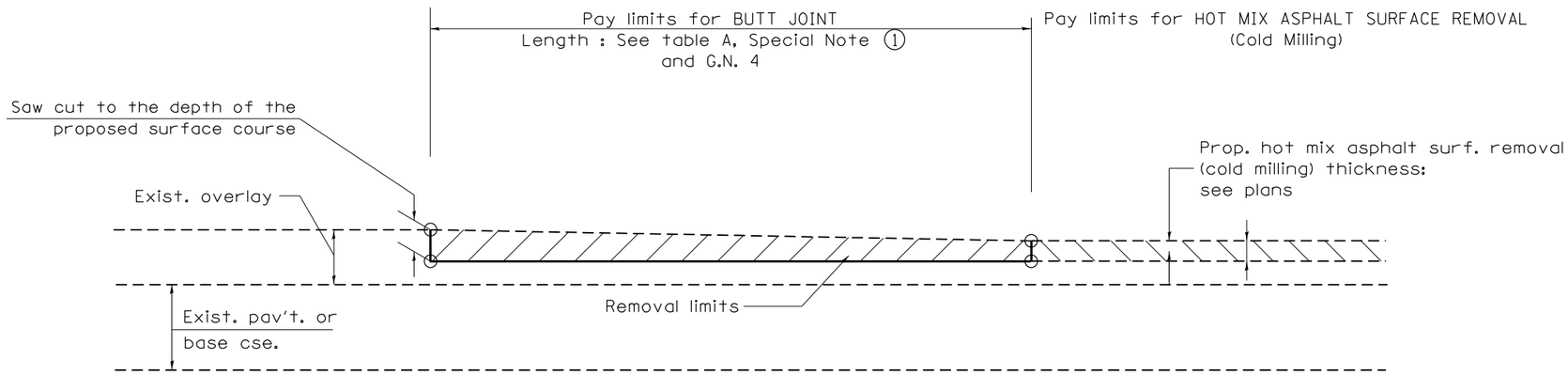

CASE 3 : HOT MIX ASPHALT SURFACE REMOVAL (COLD MILLING)
TIE-IN TO EXISTING BITUMINOUS TAPER

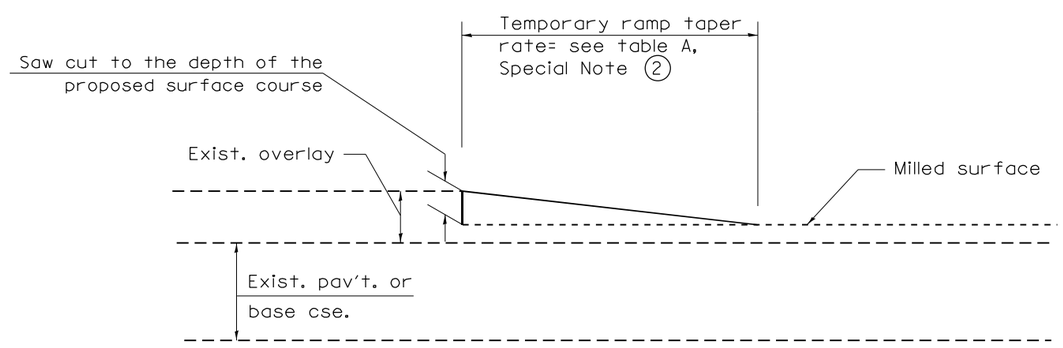

DETAIL TEMPORARY RAMP

All dimensions are in inches (millimeters) unless otherwise noted.

STATE OF ILLINOIS
DEPARTMENT OF TRANSPORTATION

BUTT JOINTS

F.A. RTE.	SECTION	COUNTY	TOTAL SHEETS	SHEET NO.
			3	2
		CONTRACT NO.		
FED. ROAD DIST. NO.	ILLINOIS	FED. AID PROJECT		

CiorbaGroup
8725 W. Higgins Rd, Ste 600, Chicago, IL 60631
P 773.775.4009 | www.ciorba.com

USER NAME = Roadway	DESIGNED - AEC	REVISED -
	DRAWN - AMS	REVISED -
PLOT SCALE = 105.0031 ' / in.	CHECKED - NDF	REVISED -
PLOT DATE = 12/18/2024	DATE - 5/31/2024	REVISED -

STATE OF ILLINOIS
DEPARTMENT OF TRANSPORTATION

IL 180 WIDENING AND RESURFACING
IDOT DISTRICT 4 STANDARD DETAILS

SCALE: SHEET OF SHEETS STA. TO STA.

F.A.S. RTE.	SECTION	COUNTY	TOTAL SHEETS	SHEET NO.
1195	*	KNOX	409	269
*	110RS-5;(111,112,108X-1)W,RS-3	CONTRACT NO. 68E50		
	ILLINOIS	FED. AID PROJECT		

DATE PLOTTED = 12/18/2024 10:50:15 AM
PW TABLE = 0021484-07.tbl
PLOT CONFIG = CGI-PDF.pltcfg
MODEL: $MODELNAME$
FILE NAME: N:\PROJ\0021484_07\CADD\ShtDetails\0468E50-DETD.dgn

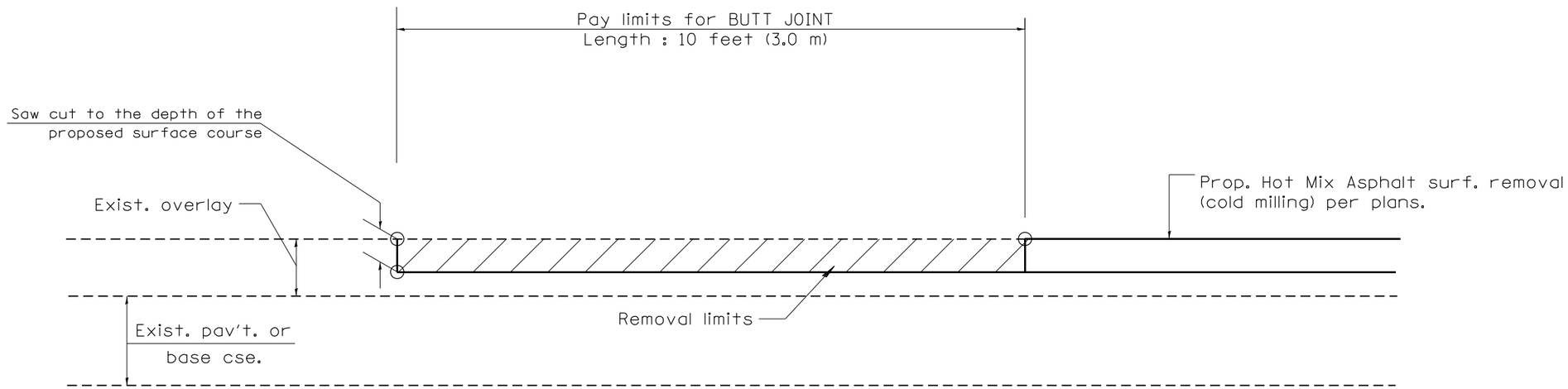

CASE 4 : SINGLE LIFT OVERLAY WITH EQUIVALENT DEPTH
HOT MIX ASPHALT SURFACE REMOVAL (COLD MILLING)
TIE-IN TO EXISTING BITUMINOUS TAPER

All dimensions are in inches (millimeters) unless otherwise noted.

STATE OF ILLINOIS
DEPARTMENT OF TRANSPORTATION

BUTT JOINTS

F.A. RTE.	SECTION	COUNTY	TOTAL SHEETS	SHEET NO.
			3	3
		CONTRACT NO.		
FED. ROAD DIST. NO.	ILLINOIS	FED. AID PROJECT		

CiorbaGroup
8725 W. Higgins Rd, Ste 600, Chicago, IL 60631
P 773.775.4009 | www.ciorba.com

USER NAME = Roadway	DESIGNED - AEC	REVISED -	
	DRAWN - AMS	REVISED -	
PLOT SCALE = 105.0104 ' / in.	CHECKED - NDF	REVISED -	
PLOT DATE = 12/18/2024	DATE - 5/31/2024	REVISED -	

STATE OF ILLINOIS
DEPARTMENT OF TRANSPORTATION

IL 180 WIDENING AND RESURFACING
IDOT DISTRICT 4 STANDARD DETAILS

SCALE: SHEET OF SHEETS STA. TO STA.

F.A.S. RTE.	SECTION	COUNTY	TOTAL SHEETS	SHEET NO.
1195	*	KNOX	409	270
*	110RS-5:(111,112,108X-1)W,RS-3	CONTRACT NO.		68E50
		ILLINOIS	FED. AID PROJECT	

DATE PLOTTED = 12/18/2024 10:50:16 AM
PRINT TABLE = 20210427.tbl
PLOT CONFIG = CGI-PDF.pltcfg
MODEL: SMODEL NAMES
FILE NAME: N:\PROJ\002148A.07\CADD-SIM\Details\D468E50-DETE.dgn

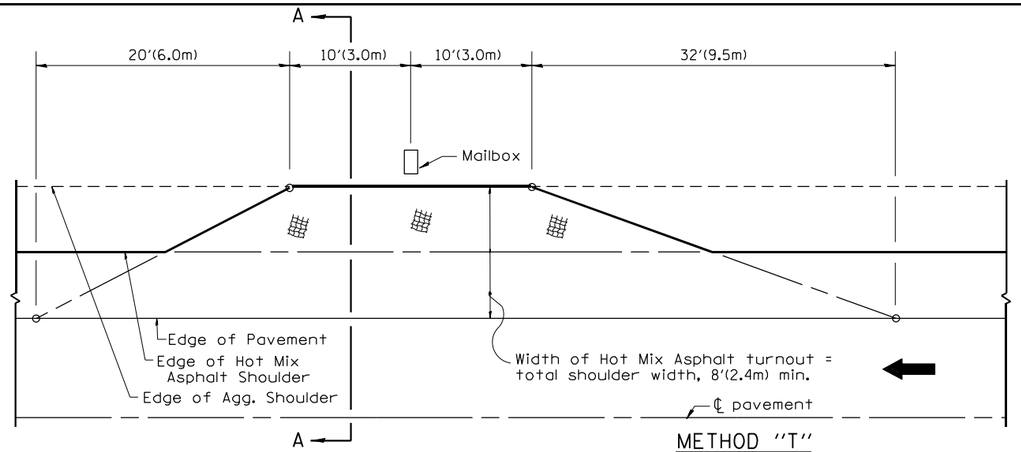

METHOD "T"

Typical Application

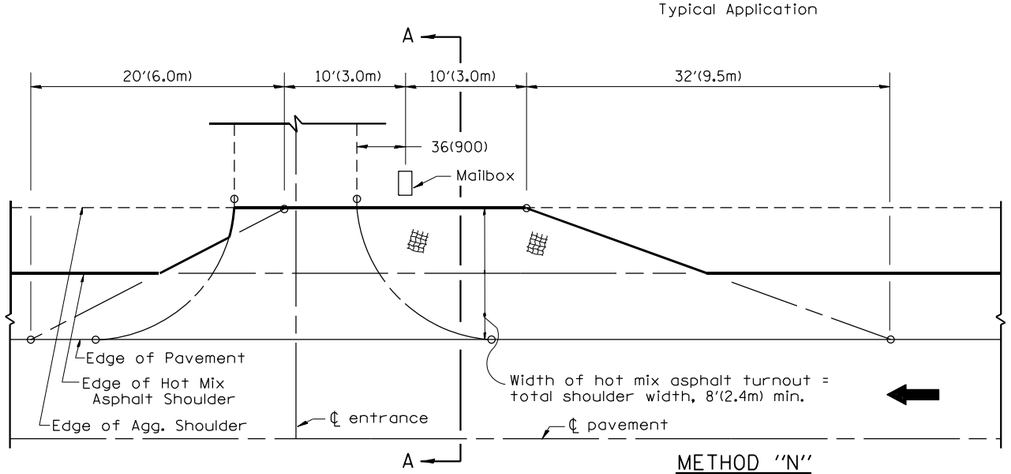

METHOD "N"

Mailbox on near side of entrance

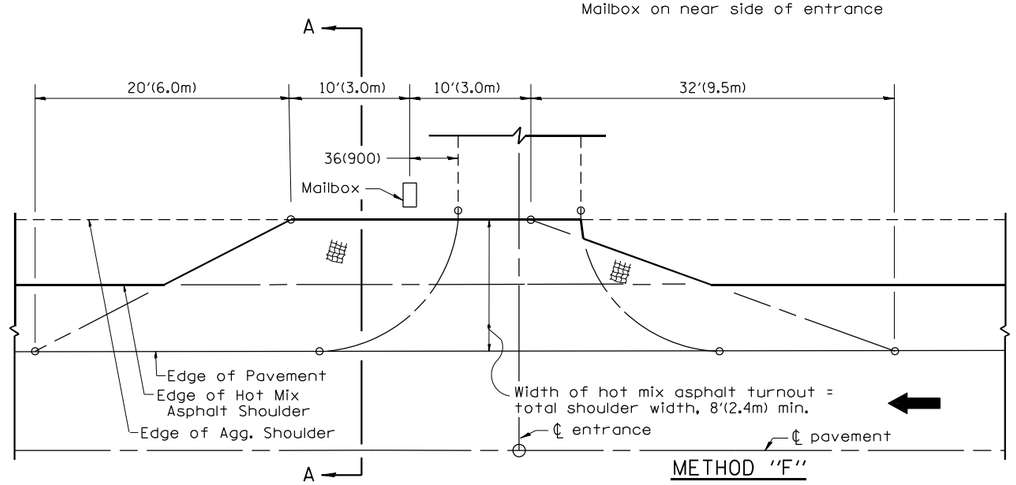

METHOD "F"

Mailbox on far side of entrance

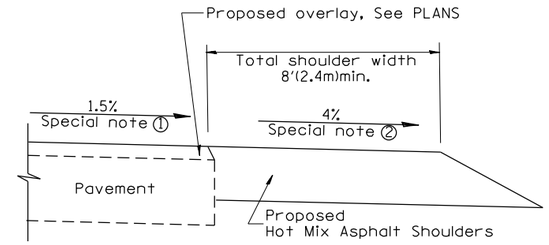

SECTION A-A

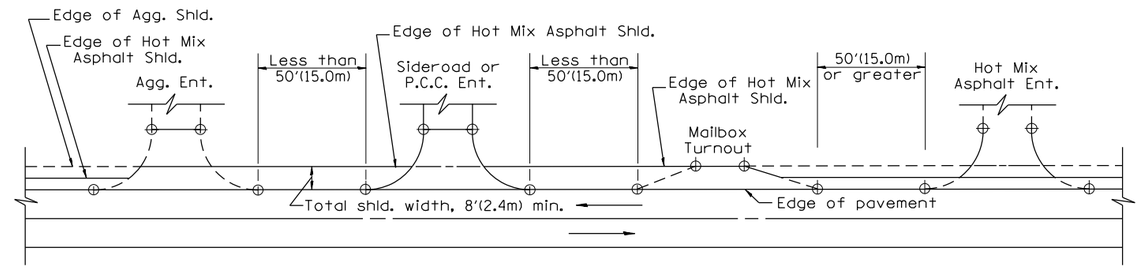

DETAIL A

SHOULDER TREATMENT FOR CLOSELY SPACED SIDEROADS, ENTRANCES, AND/OR MAILBOX TURNOUTS

GENERAL NOTES

1. Mailbox turnouts shall slope away from the pavement edge at a rate equal to the shoulder slope. See SECTION A-A.
2. The total shoulder width, 8'(2.4m) minimum, shall be paved between sideroads entrances and/or mailbox turnouts at locations where the distance between radius or taper control points is less than 50'(15.0m). See DETAIL A.
3. Mailboxes shall be mounted such that the face of the mailbox is 6(150) to 12(300) and the post a minimum of 24(600) from the edge of the turnout surfacing.

SPECIAL NOTES

① The mainline pavement cross-slope is 1.5% for tangent alignment. See PLANS for cross-slope on superelevated horizontal curves.

② The shoulder slope shall control the turnout slope. The standard cross-slope is 4% for tangent alignment. Through superelevated curves, the maximum pavement-shoulder breakover should not be greater than 10% for shoulders 6'(1.8m) and wider and 12% for shoulders 4'(1.2m) and less. Where 12(300) paved shoulders are provided, the breakover should be at the edge of the paved shoulder rather than at the pavement edge.

All dimensions are in inches (millimeters) unless otherwise noted.

01-01-97	RENUM. C-90.01, NEW REVISION BOX	T.P.
07-01-97	REVISE DESIGNER NOTES	J.A.
09-15-05	REVISED DESIGNER NOTE	M.M.A.
10-16-06	REVISED TO 2007 SPEC.	M.A.

STATE OF ILLINOIS
DEPARTMENT OF TRANSPORTATION

MAILBOX TURNOUTS FOR "3R" PROJECTS

NOT TO SCALE

CADD STD. 406201-D4

F.A. RTE.	SECTION	COUNTY	TOTAL SHEETS	SHEET NO.
		CONTRACT NO.		
FED. ROAD DIST. NO.	ILLINOIS	FED. AID PROJECT		

CiorbaGroup
8725 W. Higgins Rd, Ste 600, Chicago, IL 60631
P 773.775.4009 | www.ciorba.com

USER NAME = Roadway	DESIGNED - AEC	REVISED -	
	DRAWN - AMS	REVISED -	
PLOT SCALE = 105.0104 ' / in.	CHECKED - NDF	REVISED -	
PLOT DATE = 12/18/2024	DATE - 5/31/2024	REVISED -	

STATE OF ILLINOIS
DEPARTMENT OF TRANSPORTATION

IL 180 WIDENING AND RESURFACING
IDOT DISTRICT 4 STANDARD DETAILS

SCALE: SHEET OF SHEETS STA. TO STA.

F.A.S. RTE.	SECTION	COUNTY	TOTAL SHEETS	SHEET NO.
1195	+	KNOX	409	271
-	110RS-5:(111,112,108X-1)W,RS-3	CONTRACT NO. 68E50		
		ILLINOIS	FED. AID PROJECT	

DATE PLOTTED = 12/18/2024 10:50:16 AM
PLOT TIME = 0.02 HOURS
PLOT CONFIG = CCI-PDF.pltcfg
MODEL: SMODELNAMES
FILE NAME: N:\PROJ\0021484.07\CADD\SHTDetails\D468E50-DET23.dgn

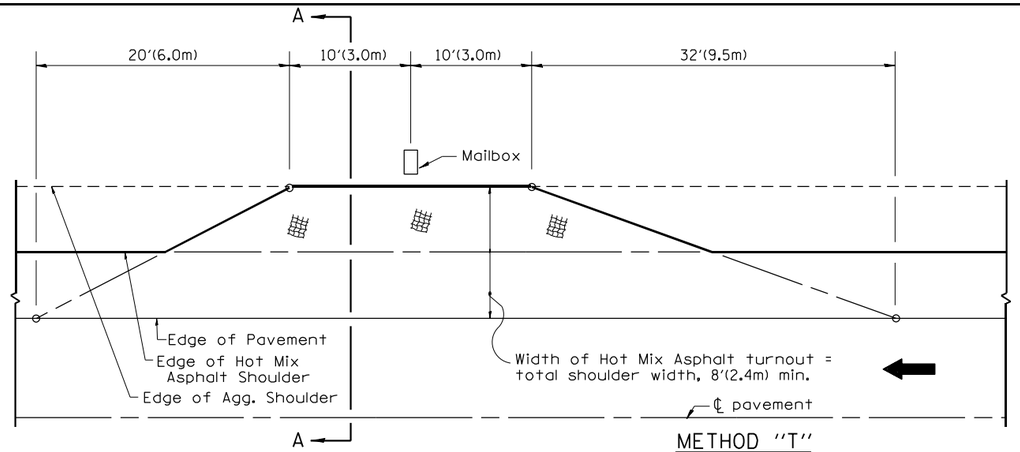

METHOD "T"

Typical Application

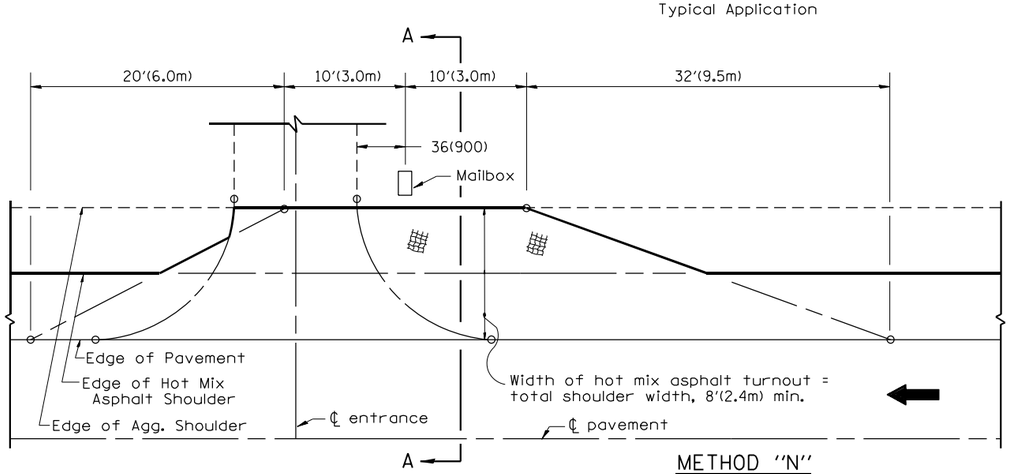

METHOD "N"

Mailbox on near side of entrance

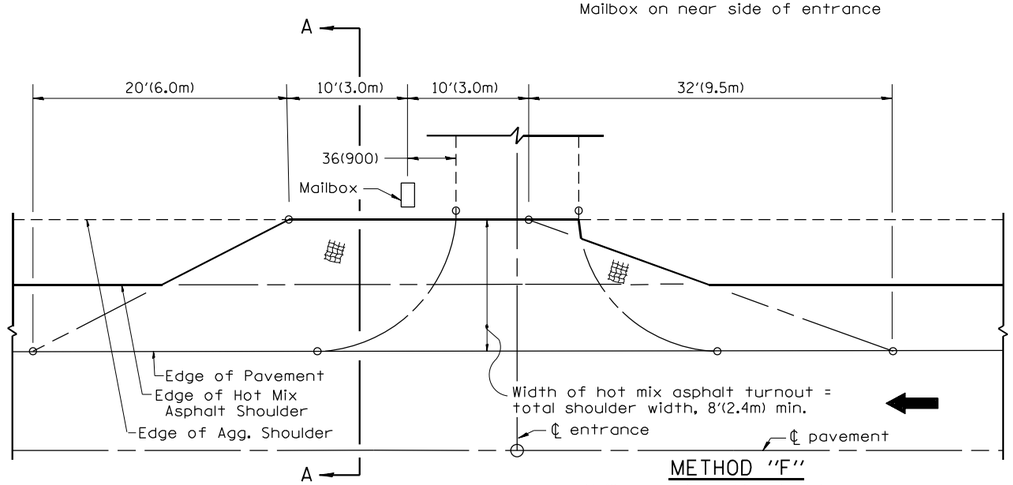

METHOD "F"

Mailbox on far side of entrance

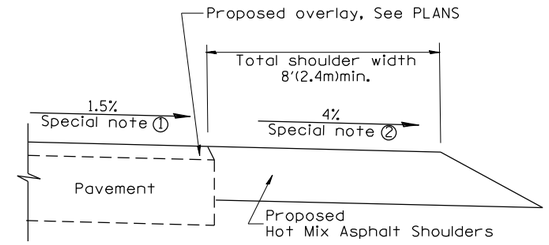

SECTION A-A

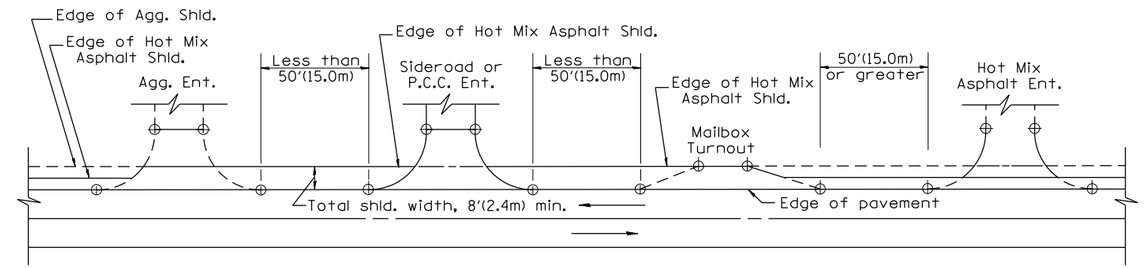

DETAIL A

SHOULDER TREATMENT FOR CLOSELY SPACED SIDEROADS, ENTRANCES, AND/OR MAILBOX TURNOUTS

GENERAL NOTES

1. Mailbox turnouts shall slope away from the pavement edge at a rate equal to the shoulder slope. See SECTION A-A.
2. The total shoulder width, 8'(2.4m) minimum, shall be paved between sideroads entrances and/or mailbox turnouts at locations where the distance between radius or taper control points is less than 50'(15.0m). See DETAIL A.
3. Mailboxes shall be mounted such that the face of the mailbox is 6(150) to 12(300) and the post a minimum of 24(600) from the edge of the turnout surfacing.

SPECIAL NOTES

① The mainline pavement cross-slope is 1.5% for tangent alignment. See PLANS for cross-slope on superelevated horizontal curves.

② The shoulder slope shall control the turnout slope. The standard cross-slope is 4% for tangent alignment. Through superelevated curves, the maximum pavement-shoulder breakover should not be greater than 10% for shoulders 6'(1.8m) and wider and 12% for shoulders 4'(1.2m) and less. Where 12(300) paved shoulders are provided, the breakover should be at the edge of the paved shoulder rather than at the pavement edge.

All dimensions are in inches (millimeters) unless otherwise noted.

01-01-97	RENUM. C-90.01, NEW REVISION BOX	T.P.
07-01-97	REVISE DESIGNER NOTES	J.A.
09-15-05	REVISED DESIGNER NOTE	M.M.A.
10-16-06	REVISED TO 2007 SPEC.	M.A.

STATE OF ILLINOIS
DEPARTMENT OF TRANSPORTATION

MAILBOX TURNOUTS FOR "3R" PROJECTS

NOT TO SCALE

CADD STD. 406201-D4

F.A. RTE.	SECTION	COUNTY	TOTAL SHEETS	SHEET NO.
		CONTRACT NO.		
FED. ROAD DIST. NO.	ILLINOIS	FED. AID PROJECT		

CiorbaGroup
8725 W. Higgins Rd, Ste 600, Chicago, IL 60631
P 773.775.4009 | www.ciorba.com

USER NAME = Roadway	DESIGNED - AEC	REVISED -	
	DRAWN - AMS	REVISED -	
PLOT SCALE = 105.0104 ' / in.	CHECKED - NDF	REVISED -	
PLOT DATE = 12/18/2024	DATE - 5/31/2024	REVISED -	

STATE OF ILLINOIS
DEPARTMENT OF TRANSPORTATION

IL 180 WIDENING AND RESURFACING
IDOT DISTRICT 4 STANDARD DETAILS

SCALE: SHEET OF SHEETS STA. TO STA.

F.A.S. RTE.	SECTION	COUNTY	TOTAL SHEETS	SHEET NO.
1195	*	KNOX	409	272
*	110RS-5:(111,112,108X-1)W,RS-3	CONTRACT NO.		68E50
		ILLINOIS	FED. AID PROJECT	

DATE PLOTTED = 12/18/2024 10:50:17 AM
PLOT TABLE = 0203-24-07.tbl
PLOT CONFIG = CGI-PDF.pltcfg
MODEL: SMODEL NAMES
FILE NAME: N:\PROJ\0021484.07\CADD\Sht\Details\0468E50-DETT.dgn

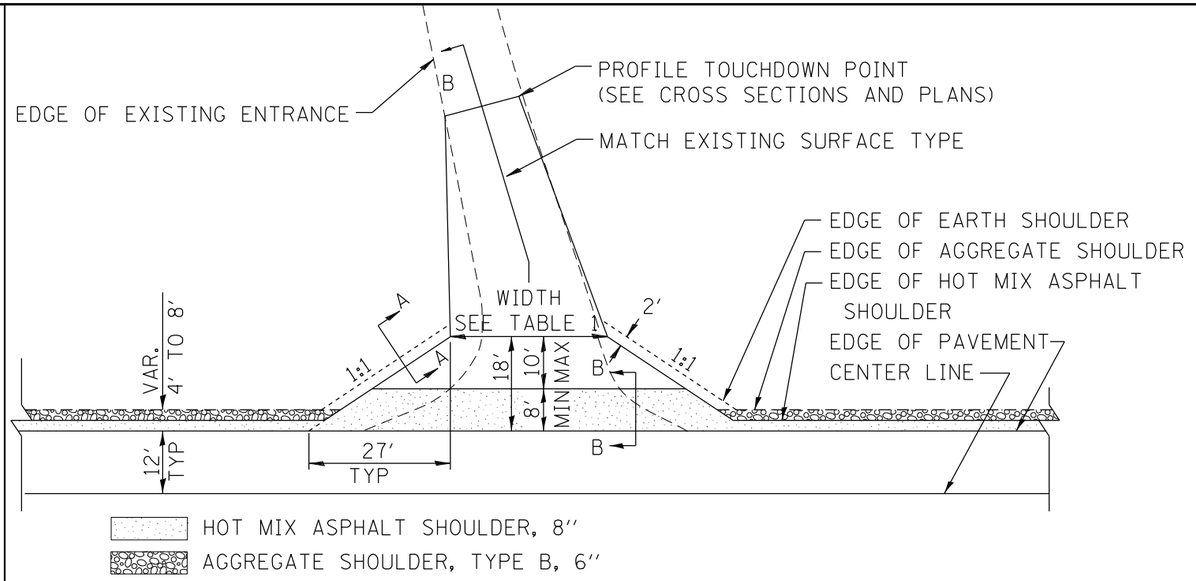

PLAN

COMMERCIAL / FARM-RELATED ENTRANCE

TABLE 1								
RURAL ENTRANCE DESIGN								
ELEMENT	NON-COMMERCIAL		NON-COMMERCIAL W/ LARGE FARM EQUIPMENT		COMMERCIAL			
					1-WAY OPERATION		2-WAY OPERATION	
WIDTH (W)	12'(3.6m) Min.	24'(7.2m) Max.	20' (6.1m)Min.	30'(9.0m)Max.	14'(4.3m) Min.	24'(7.2m) Max.	24'(7.2m) Min.	35'(10.7m) Max.
FLARE	1:1.5							
MAX. GRADE (G)	12%		12%		10%			
SURFACE TYPE								
INCIDENTAL HOT MIX ASPHALT SURFACING	6''		—		8''			
AGGREGATE SURFACE COURSE	6''		8''		—			
PCC DRIVEWAY PAVEMENT	6''		—		7''			

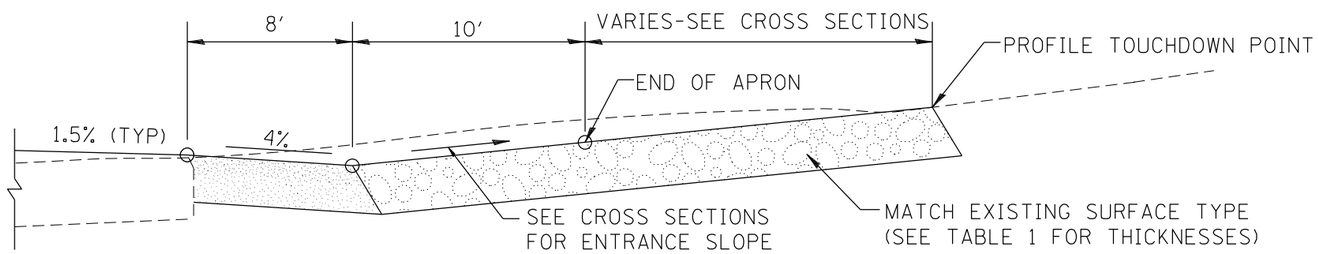

SECTION B-B

RECONSTRUCTED RURAL ENTRANCE

(EXISTING ENTRANCE HIGHER THAN APRON)

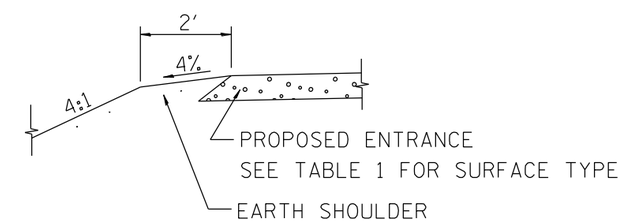

SECTION A-A

SHOULDER TREATMENT FOR RURAL ENTRANCES

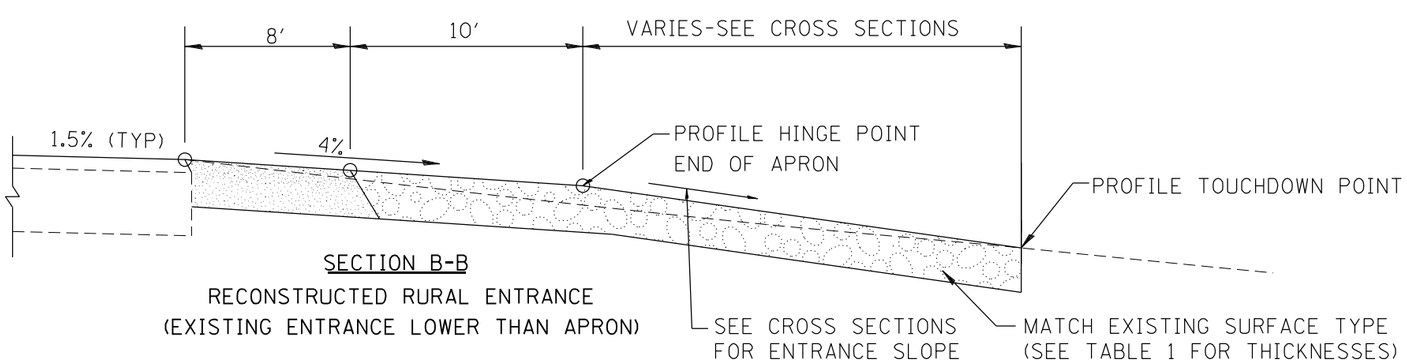

SECTION B-B

RECONSTRUCTED RURAL ENTRANCE

(EXISTING ENTRANCE LOWER THAN APRON)

GENERAL NOTES

1. ENTRANCES SHALL SLOPE AWAY FROM THE PAVEMENT AT A RATE EQUAL TO THE SHOULDER SLOPE FOR A MINIMUM DISTANCE OF 8'.

2. A MINIMUM 8' PAVED SHOULDER SHALL BE CONSTRUCTED BETWEEN LOCATIONS WHERE THE RURAL ENTRANCE IS LESS THAN 50' FROM AN ADJACENT SIDEROAD, ENTRANCE OR MAILBOX TURNOUT.

3. A TAPER RATE OF 5:1 IS DESIRABLE WHEN TRANSITING FROM THE RURAL ENTRANCE WIDTH SHOWN IN TABLE 1, TO THE EXISTING ENTRANCE WIDTH.

All dimensions are in inches (millimeters) unless otherwise noted.

01-01-97	RENUM. C-103.06, NEW REVISION BOX	T.P.	10-16-06	REVISED TO 2007 SPEC.	M.A.
07-01-97	REVISE DESIGNER NOTES	J.A.	9-15-15	UPDATED TABLE 1	R.D.
01-17-03	ADJUST DESIGN, CHANGE ENTRANCE	JATR	2-29-16	MINOR CORRECTIONS	R.D.
09-15-05	RADIUS FOR FLARE	M.M.A.	5-9-17	CHANGED TAPER RATE	R.D.

STATE OF ILLINOIS
DEPARTMENT OF TRANSPORTATION

RURAL ENTRANCES FOR "3R" PROJECTS

NOT TO SCALE

F.A. RTE.	SECTION	COUNTY	TOTAL SHEETS	SHEET NO.
			2	1
		CONTRACT NO.		
FED. ROAD DIST. NO.	ILLINOIS	FED. AID PROJECT		

CiorbaGroup
8725 W. Higgins Rd, Ste 600, Chicago, IL 60631
P 773.775.4009 | www.ciorba.com

USER NAME = Roadway	DESIGNED - AEC	REVISED -	
	DRAWN - AMS	REVISED -	
PLOT SCALE = 105.0104 ' / in.	CHECKED - NDF	REVISED -	
PLOT DATE = 12/18/2024	DATE - 5/31/2024	REVISED -	

STATE OF ILLINOIS
DEPARTMENT OF TRANSPORTATION

IL 180 WIDENING AND RESURFACING
IDOT DISTRICT 4 STANDARD DETAILS

SCALE: SHEET OF SHEETS STA. TO STA.

F.A.S. RTE.	SECTION	COUNTY	TOTAL SHEETS	SHEET NO.
1195	*	KNOX	409	273
*	110RS-5:(111,112,108X-1)W,RS-3	CONTRACT NO.		68E50
		ILLINOIS	FED. AID PROJECT	

DATE PLOTTED = 12/18/2024 10:50:17 AM
PLOT TIME = 00:00:04.07
PLOT CONFIG = CCI-PDF.pltcfg
MODEL: SMODELNAMES
FILE NAME: N:\PROJ\002148A.07\CADD-SM\Details\D468E50-DETS.dgn

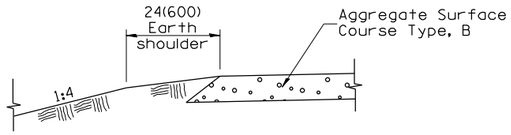

SECTION A-A

SHOULDER TREATMENT FOR AGGREGATE ENTRANCES

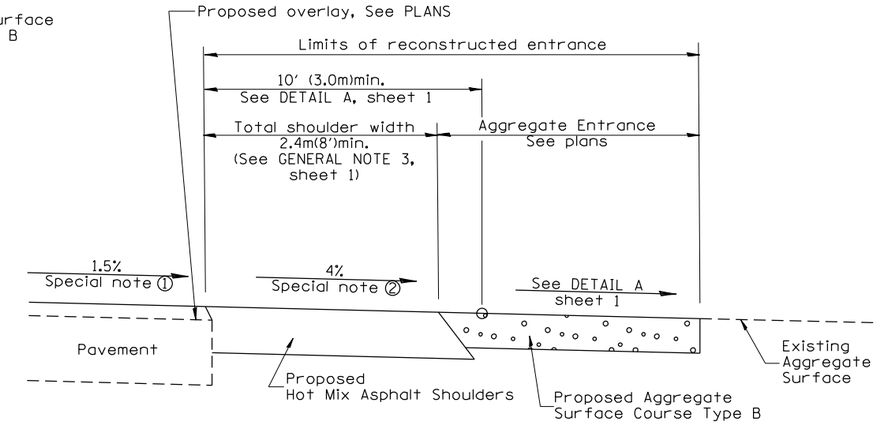

SECTION B-B

RECONSTRUCTED AGGREGATE ENTRANCE

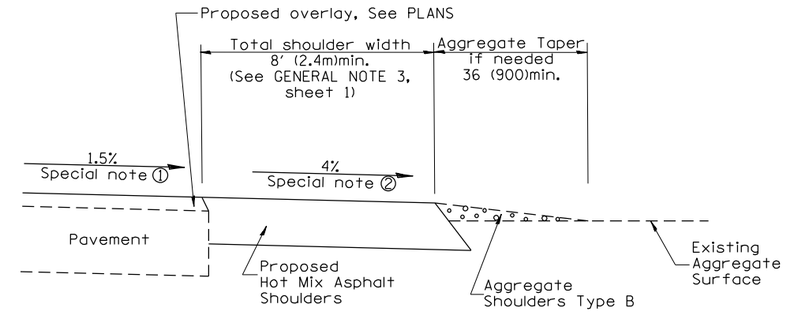

SECTION B-B

EXISTING AGGREGATE ENTRANCE

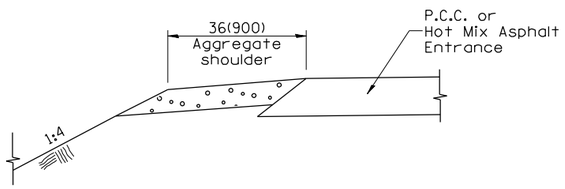

SECTION C-C

SHOULDER TREATMENT FOR P.C.C. OR HOT MIX ASPHALT ENTRANCES

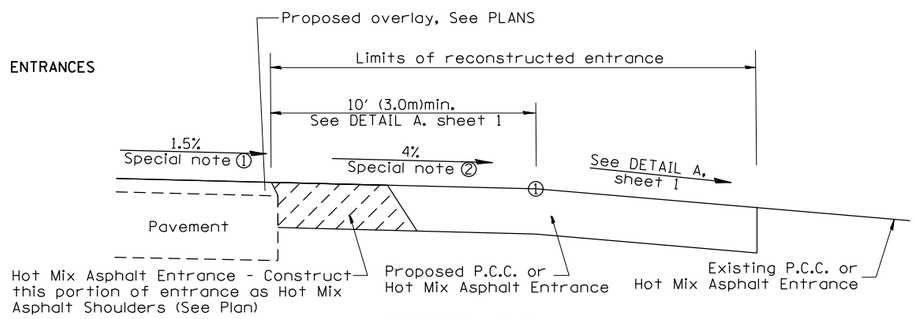

SECTION D-D

RECONSTRUCTED P.C.C. OR HOT MIX ASPHALT ENTRANCE

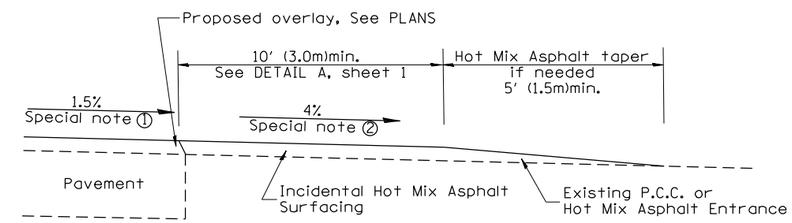

SECTION D-D

EXISTING P.C.C. OR HOT MIX ASPHALT ENTRANCE

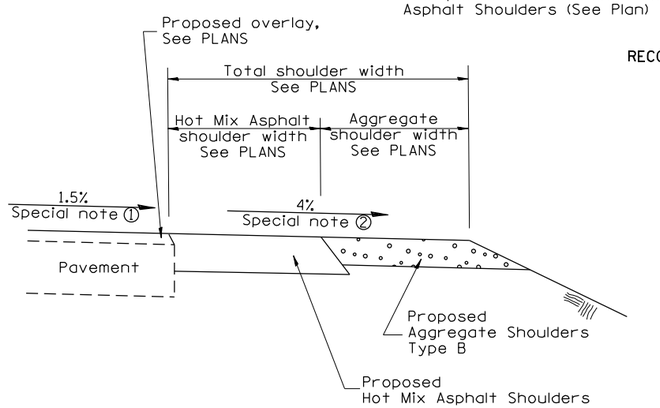

SECTION E-E

MAINLINE SHOULDER TREATMENT

SPECIAL NOTES

1. The mainline pavement cross-slope is 1.5% for tangent alignment. See PLANS for cross-slope on superelevated horizontal curves.

2. The shoulder slope shall control the entrance profile for a distance of 10' (3.0m) minimum from the pavement edge. The shoulder cross-slope is 4% for tangent alignment. Through superelevated curves, the maximum pavement-shoulder breakover should not be greater than 10% for shoulders 6' (1.8m) and wider and 12% for shoulders 4' (1.2m) and less. Where 12' (366cm) paved shoulders are provided, the breakover should be at the edge of the paved shoulder rather than at the pavement edge.

All dimensions are in inches (millimeters) unless otherwise noted.

STATE OF ILLINOIS
DEPARTMENT OF TRANSPORTATION

RURAL ENTRANCES FOR "3R" PROJECTS

NOT TO SCALE

F.A. RTE.	SECTION	COUNTY	TOTAL SHEETS	SHEET NO.
			2	2
		CONTRACT NO.		
FED. ROAD DIST. NO.	ILLINOIS	FED. AID PROJECT		

CiorbaGroup
8725 W. Higgins Rd, Ste 600, Chicago, IL 60631
P 773.775.4009 | www.ciorba.com

USER NAME = Roadway	DESIGNED - AEC	REVISED -
	DRAWN - AMS	REVISED -
PLOT SCALE = 105.0104 ' / in.	CHECKED - NDF	REVISED -
PLOT DATE = 12/18/2024	DATE - 5/31/2024	REVISED -

STATE OF ILLINOIS
DEPARTMENT OF TRANSPORTATION

IL 180 WIDENING AND RESURFACING
IDOT DISTRICT 4 STANDARD DETAILS

SCALE: SHEET OF SHEETS STA. TO STA.

F.A.S. RTE.	SECTION	COUNTY	TOTAL SHEETS	SHEET NO.
1195	*	KNOX	409	274
*	110RS-5;(111,112,108X-1)W,RS-3	CONTRACT NO. 68E50		
		ILLINOIS	FED. AID PROJECT	

DATE PLOTTED = 12/18/2024 10:50:18 AM
PENTABLE = 0720484021.tbl
PLOT CONFIG = CGI-PDF.pltcfg
MODEL: $MODELNAME$
FILE NAME: N:\PROJ\0021484_07\CADD\ShtDetails\0468E50-DETH.dgn

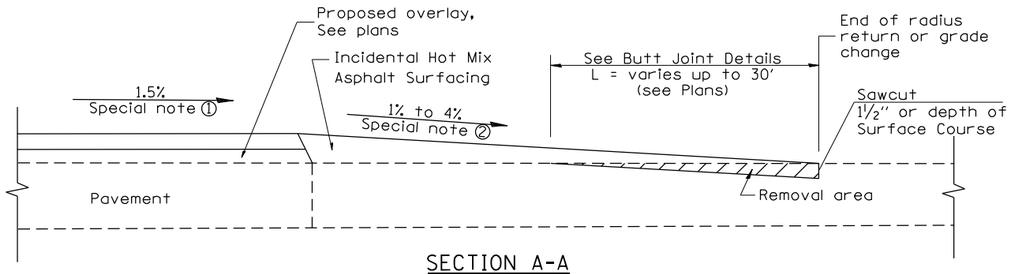

SECTION A-A
EXISTING PCC OR HOT MIX ASPHALT SIDEROAD

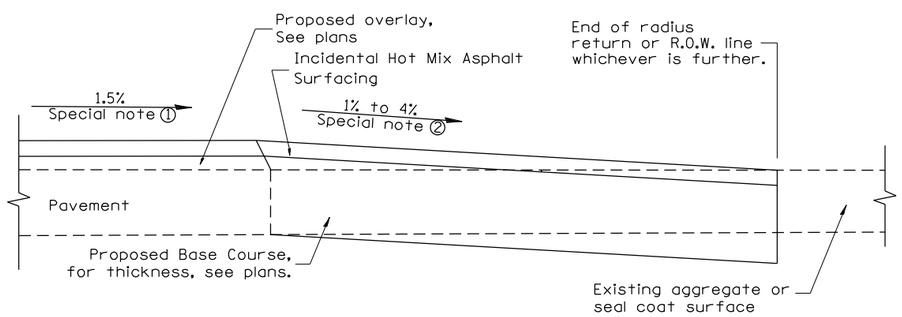

SECTION A-A
EXISTING AGGREGATE OR SEAL COAT SIDEROAD

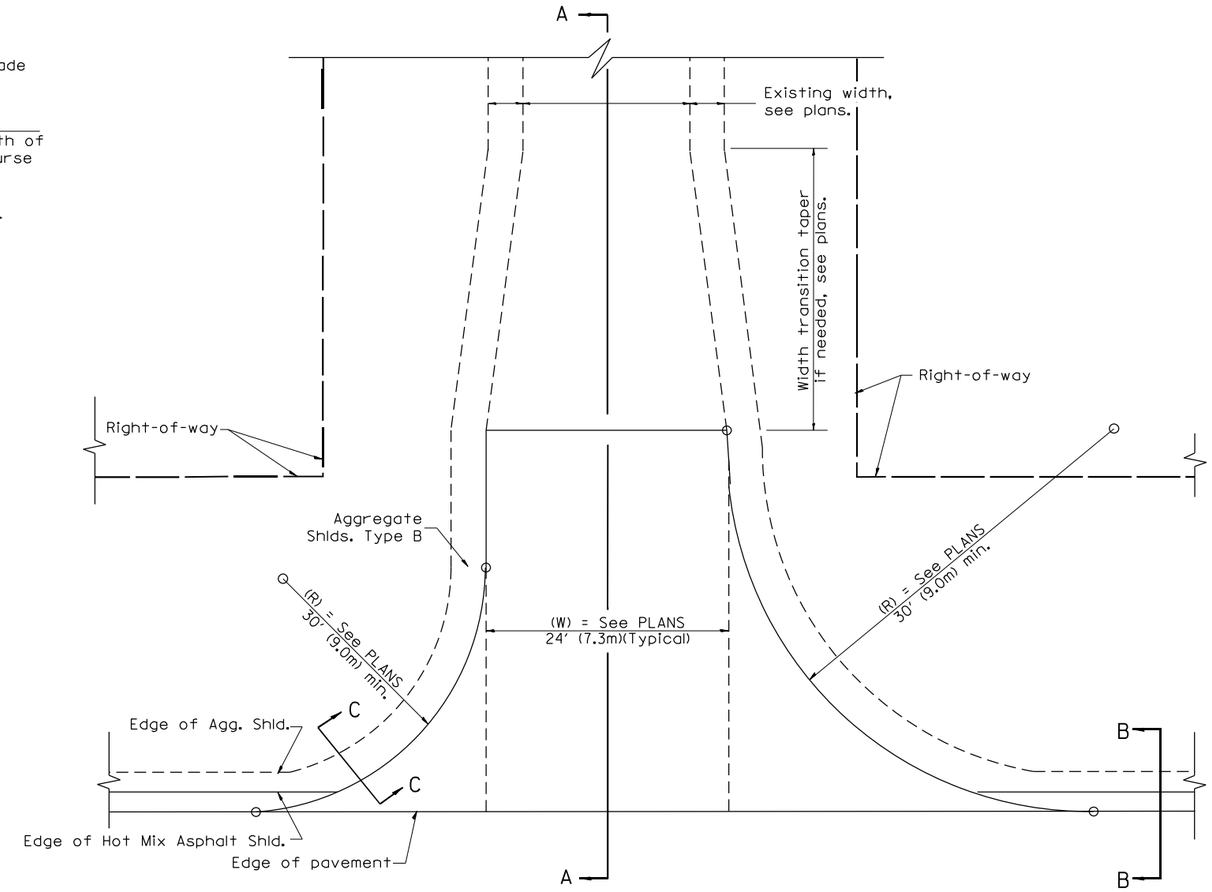

PLAN

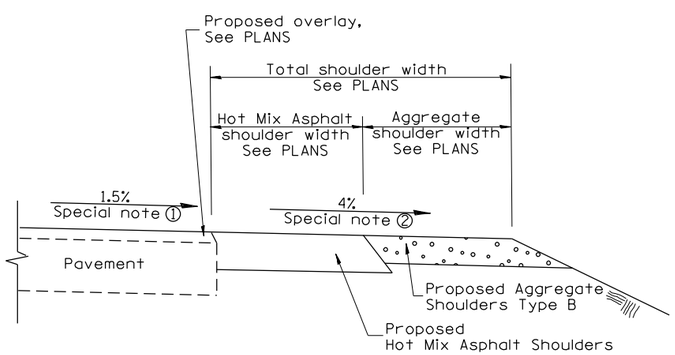

SECTION B-B
MAINLINE SHOULDER TREATMENT

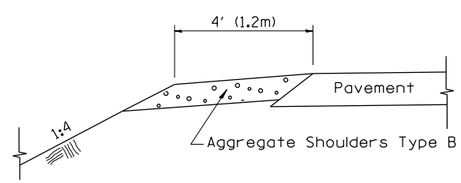

SECTION C-C
SIDEROAD SHOULDER TREATMENT

SPECIAL NOTES

① The mainline pavement cross-slope is 1.5% for tangent alignment. See Plans for cross-slope on superelevated horizontal curves.

② The sideroad profile should drain away from the mainline at 1% to 4% for 50' (15.0m) to 100' (30.0m), or as a minimum to the end of the radius return. When the sideroad is on the high side of a mainline superelevated curve, - 2% maximum should be provided in order to minimize breakover at the pavement edge. See plans for sideroad profiles.

All dimensions are in inches (millimeters) unless otherwise noted.

01-01-97	RENUM. C-105.02, NEW REVISION BOX	T.P.	02-14-17	MINOR REVISIONS	R.D.
07-01-97	REVISE DESIGNER NOTES	J.A.			
09-15-05	REVISED DESIGNER NOTE	M.M.A.			
10-16-06	REVISED TO 2007 SPEC.	M.A.			

STATE OF ILLINOIS
DEPARTMENT OF TRANSPORTATION

RURAL SIDEROADS FOR "3R" PROJECTS

NOT TO SCALE

F.A. RTE.	SECTION	COUNTY	TOTAL SHEETS	SHEET NO.
		CONTRACT NO.		
FED. ROAD DIST. NO.	ILLINOIS	FED. AID PROJECT		

CiorbaGroup
8725 W. Higgins Rd, Ste 600, Chicago, IL 60631
P 773.775.4009 | www.ciorba.com

USER NAME = Roadway	DESIGNED - AEC	REVISED -	
	DRAWN - AMS	REVISED -	
PLOT SCALE = 105.0104 ' / in.	CHECKED - NDF	REVISED -	
PLOT DATE = 12/18/2024	DATE - 5/31/2024	REVISED -	

STATE OF ILLINOIS
DEPARTMENT OF TRANSPORTATION

IL 180 WIDENING AND RESURFACING
IDOT DISTRICT 4 STANDARD DETAILS

SCALE: | SHEET OF SHEETS | STA. TO STA.

F.A.S. RTE.	SECTION	COUNTY	TOTAL SHEETS	SHEET NO.
1195	-	KNOX	409	275
-	110RS-5;(111,112,108X-1)W,RS-3	CONTRACT NO.		68E50
		ILLINOIS	FED. AID PROJECT	

DATE PLOTTED = 12/18/2024 10:50:18 AM
PLOT SCALE = 20.0000 (in.)
PLOT CONFIG = CGI-PDF.pltcfg
MODEL: $MODEL$NAME$
FILE NAME: N:\PROJ\0021484.07\CADD\ShtDetails\D468E50-DETL.dgn

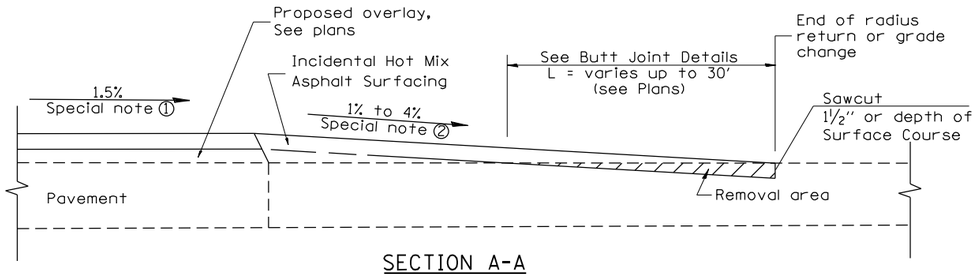

SECTION A-A
EXISTING PCC OR HOT MIX ASPHALT SIDEROAD

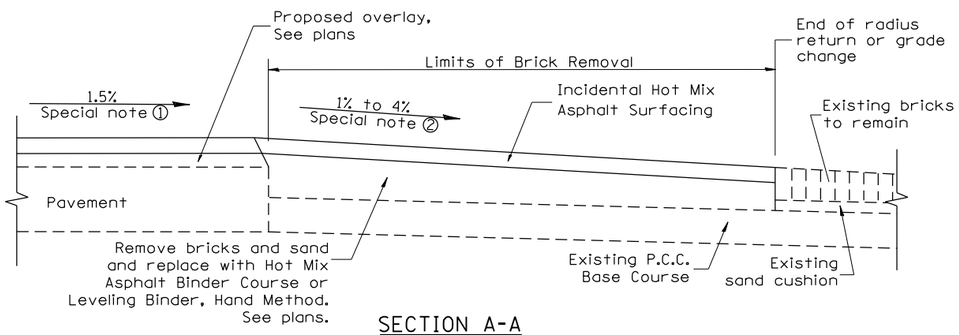

SECTION A-A
EXISTING BRICK SIDEROAD

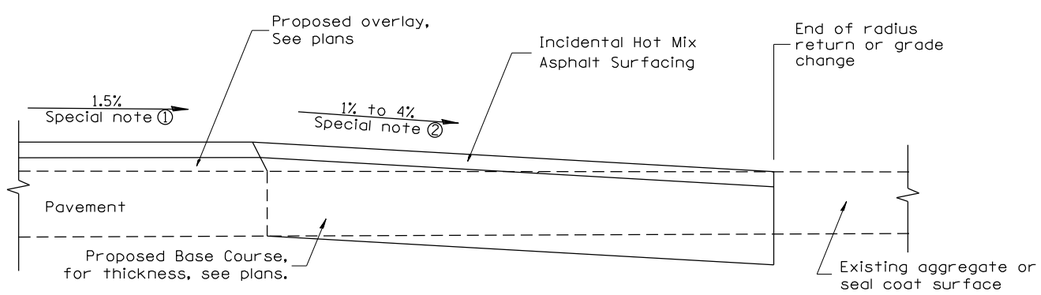

SECTION A-A
EXISTING AGGREGATE OR SEALCOAT SIDEROAD

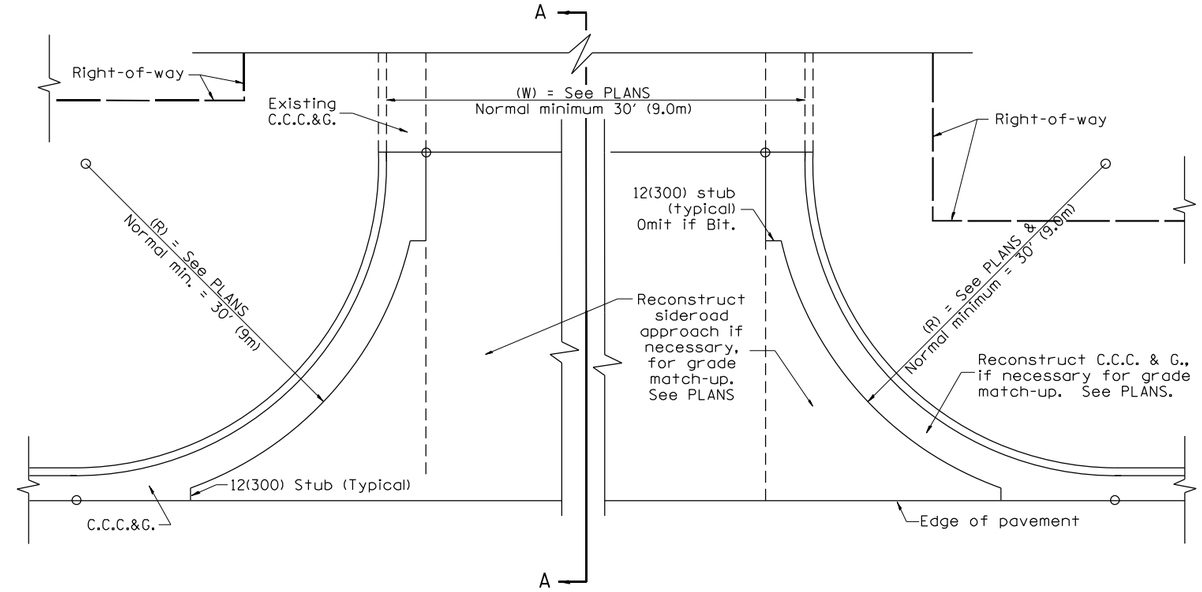

PLAN

SPECIAL NOTES

① The mainline pavement cross-slope is 1.5% for tangent alignment. See Plans for cross-slope on superelevated horizontal curves.

② The sideroad profile should drain away from the mainline at 1% to 4% for 50' (15.0m) to 100' (30.0m), or as a minimum to the end of the radius return. When the sideroad is on the high side of a mainline superelevated curve, - 2% maximum should be provided in order to minimize breakover at the pavement edge. See plans for sideroad profiles.

All dimensions are in inches (millimeters) unless otherwise noted.

01-01-97	RENUM. C-105.01. NEW REVISION BOX	T.P.	02-14-17	MINOR REVISIONS	R.D.
07-01-97	REVISE DESIGNER NOTES	J.A.			
09-15-05	REVISED DESIGNER NOTE	M.M.A.			
10-16-06	REVISED TO 2007 SPEC.	M.A.			

STATE OF ILLINOIS
DEPARTMENT OF TRANSPORTATION

URBAN SIDEROADS FOR "3R" PROJECTS

NOT TO SCALE

CADD STD. 406501-D4

F.A. RTE.	SECTION	COUNTY	TOTAL SHEETS	SHEET NO.
		CONTRACT NO.		
FED. ROAD DIST. NO.	ILLINOIS	FED. AID PROJECT		

CiorbaGroup
8725 W. Higgins Rd, Ste 600, Chicago, IL 60631
P 773.775.4009 | www.ciorba.com

USER NAME = Roadway	DESIGNED - AEC	REVISED -	
	DRAWN - AMS	REVISED -	
PLOT SCALE = 105.0104 ' / in.	CHECKED - NDF	REVISED -	
PLOT DATE = 12/18/2024	DATE - 5/31/2024	REVISED -	

STATE OF ILLINOIS
DEPARTMENT OF TRANSPORTATION

IL 180 WIDENING AND RESURFACING
IDOT DISTRICT 4 STANDARD DETAILS

SCALE: SHEET OF SHEETS STA. TO STA.

F.A.S. RTE.	SECTION	COUNTY	TOTAL SHEETS	SHEET NO.
1195	*	KNOX	409	276
*	110RS-5:(111,112,108X-1)W,RS-3	CONTRACT NO. 68E50		
		ILLINOIS	FED. AID PROJECT	

DATE PLOTTED = 12/18/2024 10:50:19 AM
PWF FILE = 2024-0423-700.pwf
PLOT CONFIG = CGI-PDF.pltcfg
MODEL: $MODEL$NAMES
FILE NAME: h:\IPROJ\0021484.07\CADD\SHtDetails\D406ESD-DETT4.dgn

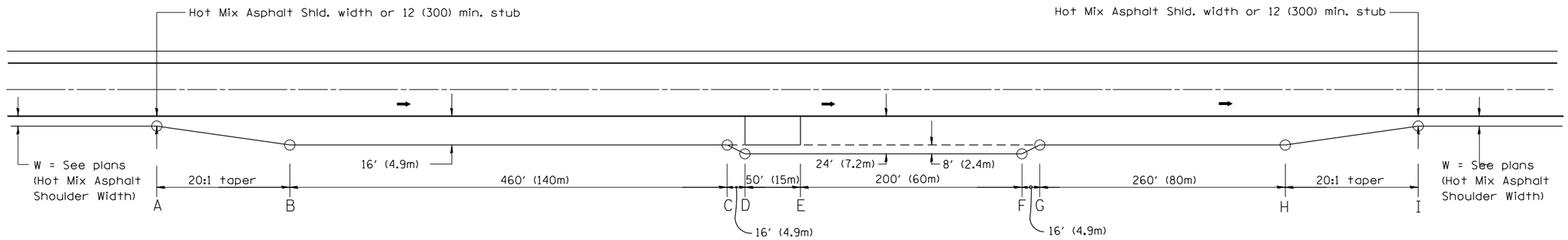

PLAN

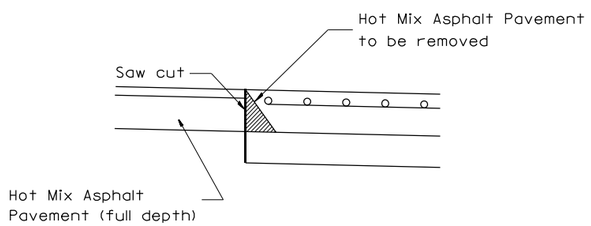

SPECIAL DETAIL

(Saw cut @ P.C.C. Pad,
if applicable)

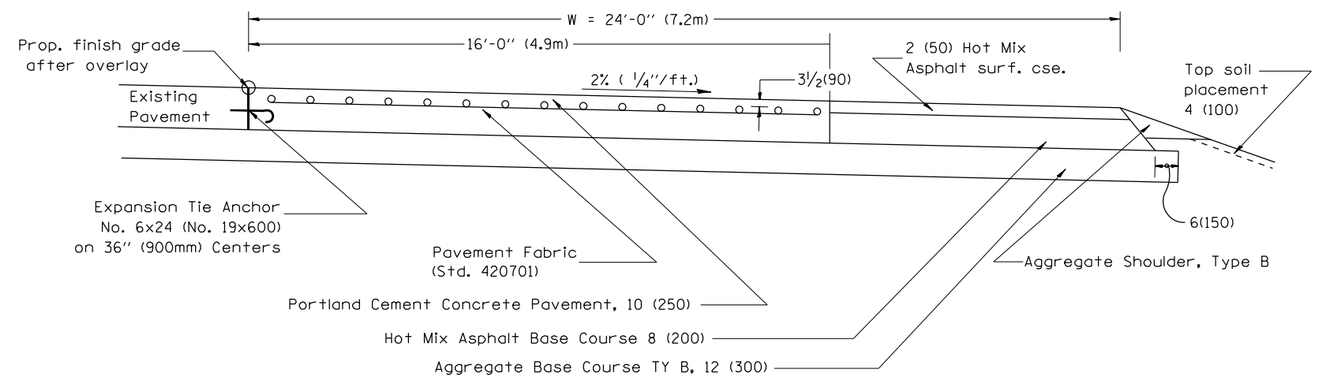

TYPICAL SECTION @ P.C.C. PAD

LOCATION D TO E

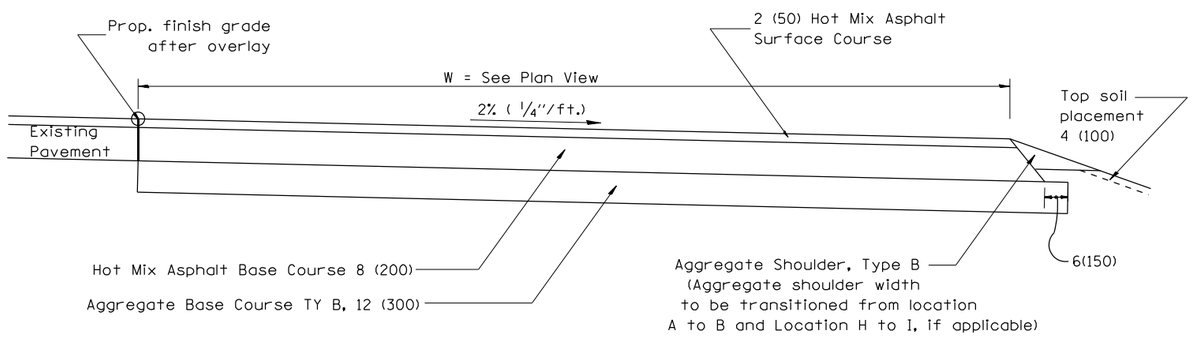

TYPICAL SECTION

LOCATION A TO D
LOCATION E TO I

GENERAL NOTES

1. The P.C.C. pavement shall be constructed without any joints.
2. The maximum longitudinal grade of P.C.C. pad shall be ± 2%.

All dimensions are in inches (millimeters) unless otherwise noted.

01-01-97	RENUM. C-80.02, NEW REVISION BOX	T.P.
10-16-06	REVISED TO 2007 SPEC.	M.A.
01-31-18	REVISED EXPANSION TIE SIZE & SPACING	R.D.

STATE OF ILLINOIS
DEPARTMENT OF TRANSPORTATION

PORTABLE SCALE TURNOUT FOR WIDENING & RESURFACING AND RESURFACING PROJECTS

NOT TO SCALE — CADD STD. 420201-D4

F.A. RTE.	SECTION	COUNTY	TOTAL SHEETS	SHEET NO.
		CONTRACT NO.		
FED. ROAD DIST. NO.	ILLINOIS	FED. AID PROJECT		

CiorbaGroup
8725 W. Higgins Rd, Ste 600, Chicago, IL 60631
P 773.775.4009 | www.ciorba.com

USER NAME = Roadway	DESIGNED - AEC	REVISED -	
	DRAWN - AMS	REVISED -	
PLOT SCALE = 105.0104 ' / in.	CHECKED - NDF	REVISED -	
PLOT DATE = 12/18/2024	DATE - 5/31/2024	REVISED -	

STATE OF ILLINOIS
DEPARTMENT OF TRANSPORTATION

IL 180 WIDENING AND RESURFACING
IDOT DISTRICT 4 STANDARD DETAILS

SCALE: | SHEET OF SHEETS | STA. TO STA.

F.A.S. RTE.	SECTION	COUNTY	TOTAL SHEETS	SHEET NO.
1195	*	KNOX	409	277
* 110RS-5;(111,112,108X-1)W,RS-3		CONTRACT NO. 68E50		
	ILLINOIS	FED. AID PROJECT		

DATE PLOTTED = 12/18/2024 10:50:19 AM
PLOT TARGET = D2710_420201-D4.tbl
PLOT CONFIG = CGI-PDF.pltcfg
MODEL: $MODELNAMES
FILE NAME: N:\PROJ\0021484.07\CADD\StdDetails\D468E50-DET1.dgn

ROADWAY PROFILE VIEW

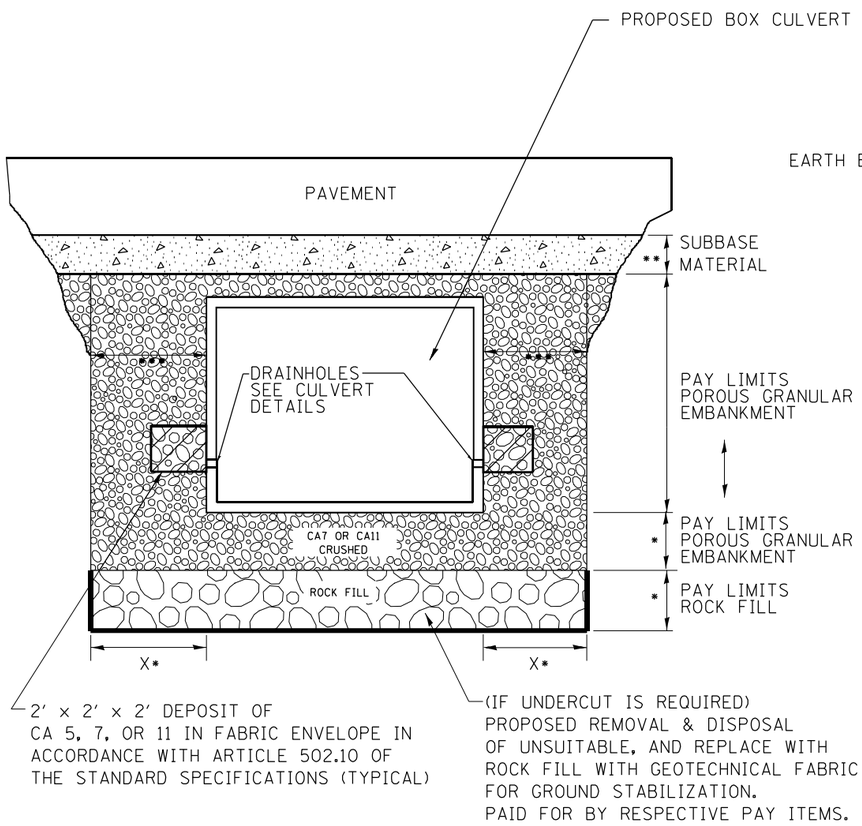

ROADWAY CROSS SECTION VIEW

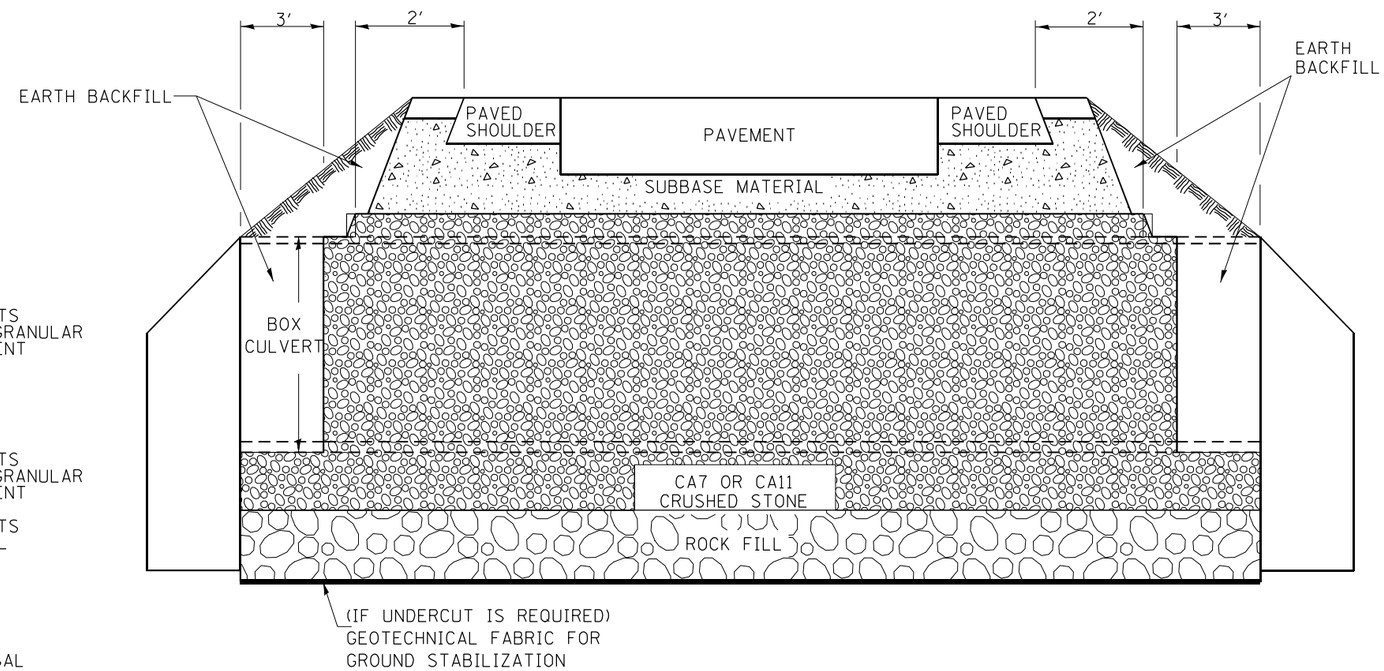

* IF APPLICABLE, SEE UNDERCUT DETAIL FOR DEPTHS AND WIDTHS. IF THERE IS NO UNDERCUT, X = 2 FEET AND SEE NOTE 3 THIS SHEET.

** SUBBASE SHALL BE 6" MINIMUM LAYER OF CA6 CRUSHED STONE OR OTHER MATERIAL AS SPECIFIED IN THE PLANS.

*** PAY LIMITS OF POROUS GRANULAR EMBARKMENT SHALL BE 2 FEET UNLESS OTHERWISE SHOWN IN THE PLANS.

NOTES:

1. EXCEPT AS SPECIFIED IN THIS DETAIL, THE PLACEMENT AND COMPACTION OF BACKFILL SHALL BE IN ACCORDANCE WITH ARTICLE 502.10 OF THE STANDARD SPECIFICATIONS.
2. POROUS GRANULAR EMBARKMENT SHALL BE PLACED IN ACCORDANCE WITH SECTION 207 OF THE STANDARD SPECIFICATIONS.
3. IF NO UNDERCUT IS REQUIRED, A 6" MINIMUM LAYER OF POROUS GRANULAR EMBANKMENT SHALL BE PLACED BELOW THE ELEVATION OF THE BOTTOM OF BOX CULVERT.

All dimensions are in inches (millimeters) unless otherwise noted.

6-12-12	CREATED NEW STD.	R.D.

STATE OF ILLINOIS
DEPARTMENT OF TRANSPORTATION

DETAIL OF EXCAVATION AND BACKFILL FOR BOX CULVERTS

NOT TO SCALE

F.A. RTE.	SECTION	COUNTY	TOTAL SHEETS	SHEET NO.
		CONTRACT NO.		
FED. ROAD DIST. NO.	ILLINOIS	FED. AID PROJECT		

CiorbaGroup
8725 W. Higgins Rd, Ste 600, Chicago, IL 60631
P 773.775.4009 | www.ciorba.com

USER NAME = Roadway	DESIGNED - AEC	REVISED -	
	DRAWN - AMS	REVISED -	
PLOT SCALE = 105.0104 ' / in.	CHECKED - NDF	REVISED -	
PLOT DATE = 12/18/2024	DATE - 5/31/2024	REVISED -	

STATE OF ILLINOIS
DEPARTMENT OF TRANSPORTATION

IL 180 WIDENING AND RESURFACING
IDOT DISTRICT 4 STANDARD DETAILS

SCALE: SHEET OF SHEETS STA. TO STA.

F.A.S. RTE.	SECTION	COUNTY	TOTAL SHEETS	SHEET NO.
1195	*	KNOX	409	278
-	110RS-5:(111,112,108X-1)W,RS-3	CONTRACT NO.	68E50	
		ILLINOIS	FED. AID PROJECT	

DATE PLOTTED = 12/18/2024 10:50:20 AM
PLOT TIME = 0.0278 HRS
PLOT CONFIG = CGI-PDF.pltcfg
MODEL: $MODEL NAMES
FILE NAME: N:\PROJ\60214844.07\CADD\SHTDetails\D468E50-DETL.dgn

• MINIMUM 1' LAP ON U BARS

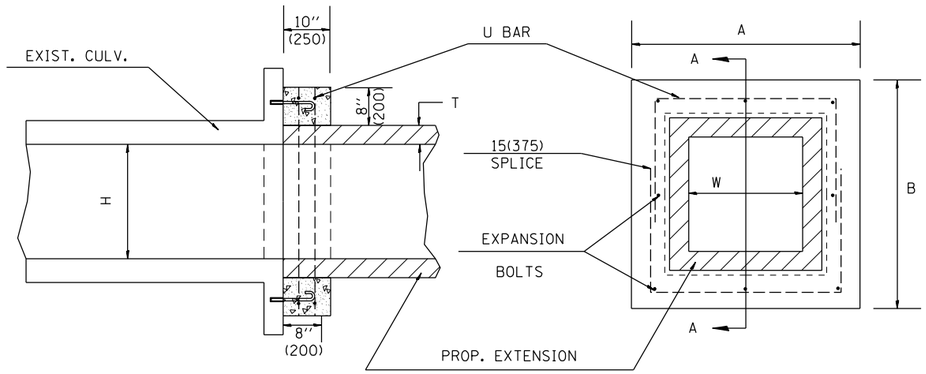

SECTION A - A

END VIEW

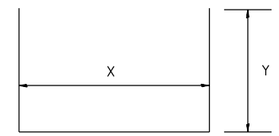

#4 U BAR
FOUR REQUIRED
PER COLLAR

GENERAL NOTES

1. The collar shall be constructed entirely of class SI concrete and in accordance with the applicable portions of section 503 of the Standard Specifications. Reinforcement bars shall conform to section 508.

2. Expansion bolts shall consist of approved expansions anchors, and ¾" (M20) hook bolts which conform to Section 1006.09. These bolts shall extend at least 8"(200) into the new concrete.

3. This work will be paid for by the cubic yard (cubic meter) for CONCRETE COLLAR, by the pound (kg) for REINFORCEMENT BARS, and by Each for EXPANSION BOLTS of the size indicated.

DIMENSIONS

EXISTING BOX		A	B	T	EACH COLLAR				
					CL SI	REINFORCEMENT BARS			EXPANSION BOLTS
W ft (mm)	H ft (mm)				CU YD (m^3)	X	Y	POUNDS (kg)	NO.
2 (600)	2 (600)	4'-0" (1.22m)	4'-0" (1.22m)	4(100)	0.27(0.21)	3'-4" (1.02m)	27.5(698)	21 (9.5)	8
3 (900)	2 (600)	5'-0" (1.52m)	4'-0" (1.22m)	4(100)	0.32(0.24)	4'-4" (1.32m)	27.5(698)	24 (11)	8
3 (900)	2.5 (750)	5'-0" (1.52m)	4'-6" (1.37m)	4(100)	0.34(0.26)	4'-4" (1.32m)	30.5(774)	25 (11.5)	8
3 (900)	3 (900)	5'-0" (1.52m)	5'-0" (1.52m)	4(100)	0.36(0.28)	4'-4" (1.32m)	33.5(850)	26.5 (12)	8
3 (900)	4 (1200)	5'-2" (1.57m)	6'-2" (1.88m)	5(125)	0.41(0.31)	4'-6" (1.37m)	40.5(1.03m)	30 (13.5)	10
4 (1200)	3 (900)	6'-2" (1.88m)	5'-2" (1.57m)	5(125)	0.41(0.31)	5'-6" (1.68m)	34.5(876)	30 (13.5)	10
4 (1200)	4 (1200)	6'-2" (1.88m)	6'-2" (1.88m)	5(125)	0.45(0.34)	5'-6" (1.68m)	40.5(1.03m)	33 (15)	12
4 (1200)	5 (1500)	6'-4" (1.93m)	7'-4" (2.24m)	6(150)	0.51(0.39)	5'-8" (1.73m)	3'-11.5"(1.21m)	36 (16.5)	14
5 (1500)	4 (1200)	7'-4" (2.24m)	6'-4" (1.93m)	6(150)	0.51(0.39)	6'-8" (2.03m)	3'-5.5"(1.05m)	36 (16.5)	14
5 (1500)	5 (1500)	7'-4" (2.24m)	7'-4" (2.24m)	6(150)	0.55(0.42)	6'-8" (2.03m)	3'-11.5"(1.21m)	39 (17.5)	16
5 (1500)	6 (1800)	7'-6" (2.29m)	8'-6" (2.59m)	7(175)	0.60(0.46)	6'-10" (2.08m)	4'-6.5"(1.38m)	42.5 (19)	16
6 (1800)	4 (1200)	8'-6" (2.59m)	6'-6" (1.98m)	7(175)	0.56(0.43)	7'-10" (2.39m)	3'-6.5"(1.08m)	40 (18)	14
6 (1800)	5 (1500)	8'-6" (2.59m)	7'-6" (2.29m)	7(175)	0.60(0.46)	7'-10" (2.39m)	4'-0.5"(1.23m)	42.5 (19)	16
6 (1800)	6 (1800)	8'-6" (2.59m)	8'-6" (2.59m)	7(175)	0.64(0.49)	7'-10" (2.39m)	4'-6.5"(1.38m)	45 (20.5)	16
6 (1800)	8 (2400)	8'-8" (2.64m)	10'-8" (3.25m)	8(200)	0.74(0.57)	8'-0" (2.44m)	5'-7.5"(1.71m)	51.5 (23)	18
8 (2400)	8 (2400)	10'-8" (3.25m)	10'-8" (3.25m)	8(200)	0.82(0.63)	10'-0" (3.05m)	5'-7.5"(1.71m)	57 (26)	20

QUANTITIES

CALC. BY: _____ DATE:

CHECKED BY: _____ DATE:

QUANTITY CALCULATIONS ARE ON FILE AT THE DISTRICT 4 OFFICE; BUREAU OF PROJECT IMPLEMENTATION; DOCUMENTATION SECTION

All dimensions are in inches (millimeters) unless otherwise noted.

01-01-97	RENUM. J-12.01, METRICS, NEW REVISION BOX, REVISED TITLE BOX, ADDED QUANTITY CALCULATION BOX	T.P.
10-16-06	REV. TO 2007 SPEC., REINF. BARS COL.	M.A.
2-15-11	ADDED GENERAL NOTE *3 & REVISED BAR LAP LENGTH	R.D.

STATE OF ILLINOIS
DEPARTMENT OF TRANSPORTATION

COLLAR FOR BOX CULVERT EXTENSIONS

NOT TO SCALE — CADD STD. 540001-D4

F.A. RTE.	SECTION	COUNTY	TOTAL SHEETS	SHEET NO.
		CONTRACT NO.		
FED. ROAD DIST. NO.	ILLINOIS	FED. AID PROJECT		

CiorbaGroup
8725 W. Higgins Rd, Ste 600, Chicago, IL 60631
P 773.775.4009 | www.ciorba.com

USER NAME = Roadway	DESIGNED - AEC	REVISED -	
	DRAWN - AMS	REVISED -	
PLOT SCALE = 105.0104 ' / in.	CHECKED - NDF	REVISED -	
PLOT DATE = 12/18/2024	DATE - 5/31/2024	REVISED -	

STATE OF ILLINOIS
DEPARTMENT OF TRANSPORTATION

IL 180 WIDENING AND RESURFACING
IDOT DISTRICT 4 STANDARD DETAILS

SCALE: SHEET OF SHEETS STA. TO STA.

F.A.S. RTE.	SECTION	COUNTY	TOTAL SHEETS	SHEET NO.
1195	*	KNOX	409	279
*	110RS-5:(111,112,108X-1)W,RS-3	CONTRACT NO.		68E50
		ILLINOIS	FED. AID PROJECT	

DATE PLOTTED = 12/18/2024 10:50:20 AM
PLOT TIME = 00:00:04.07
PLOT CONFIG = CCI-PDF.pltcfg
MODEL: $MODEL NAMES
FILE NAME: N:\PROJ\0021484.07\CADD-SN\Details\D468E50-DETL.dgn

PIPE DIA.	APPROX. QTY. lbs (kg)	WALL	A	B	C	D	E	G	R	APPROX. SLOPE
12 (300)	530 (240)	2 (51)	4 (102)	24 (610)	4′-0 1/8″ (1.241 m)	6′-0 7/8″ (1.851 m)	24 (610)	2 (51)	9 (229)	1:2.4
15 (375)	740 (335)	2 1/4 (57)	6 (152)	27 (686)	3′-10″ (1.168 m)	6′-1″ (1.854 m)	30 (762)	2 1/4 (57)	11 (280)	1:2.4
18 (450)	990 (450)	2 1/2 (64)	9 (229)	27 (686)	3′-10″ (1.168 m)	6′-1″ (1.854 m)	36 (914)	2 1/2 (64)	12 (305)	1:2.4
21 (525)	1280 (580)	2 3/4 (70)	9 (229)	35 (889)	38 (965)	6′-1″ (1.854 m)	3′-6″ (1.067 m)	2 3/4 (70)	13 (330)	1:2.4
24 (600)	1520 (690)	3 (76)	9 1/2 (241)	3′-7 1/2″ (1.105 m)	30 (762)	6′-1 1/2″ (1.867 m)	4′-0″ (1.219 m)	3 (76)	14 (356)	1:2.5
27 (675)	1930 (875)	3 1/4 (83)	10 1/2 (267)	4′-0″ (1.219 m)	25 1/2 (648)	6′-1 1/2″ (1.867 m)	4′-6″ (1.372 m)	3 1/4 (83)	14 1/2 (368)	1:2.4
30 (750)	2190 (995)	3 1/2 (89)	12 (305)	4′-6″ (1.375 m)	19 3/4 (502)	6′-1 3/4″ (1.874 m)	5′-0″ (1.524 m)	3 1/2 (89)	15 (381)	1:2.5
33 (825)	3200 (1450)	3 3/4 (95)	13 1/2 (343)	4′-10 1/2″ (1.486 m)	39 1/4 (997)	8′-1 3/4″ (2.483 m)	5′-6″ (1.676 m)	3 3/4 (95)	17 1/2 (445)	1:2.5
36 (900)	4100 (1860)	4 (102)	15 (381)	5′-3″ (1.6 m)	34 3/4 (883)	8′-1 3/4″ (2.483 m)	6′-0″ (1.829 m)	4 (102)	20 (508)	1:2.5
42 (1050)	5380 (2440)	4 1/2 (114)	21 (533)	5′-3″ (1.6 m)	35 (889)	8′-2″ (2.489 m)	6′-6″ (1.981 m)	4 1/2 (114)	22 (559)	1:2.5
48 (1200)	6550 (2970)	5 (127)	24 (610)	6′-0″ (1.829 m)	26 (660)	8′-2″ (2.489 m)	7′-0″ (2.134 m)	5 (127)	22 (559)	1:2.5
54 (1350)	8240 (3740)	5 1/2 (140)	27 (686)	5′-5″ (1.651 m)	35 (889)	8′-4″ (2.54 m)	7′-6″ (2.286 m)	5 1/2 (140)	24 (610)	1:2.0
60 (1500)	8730 (3960)	6 (152)	35 (889)	5′-0″ (1.524 m)	39 (991)	8′-3″ (2.515 m)	8′-0″ (2.438 m)	5 (127)	*	1:1.9
66 (1650)	10710 (4860)	6 1/2 (165)	30 (762)	6′-0″ (1.829 m)	27 (686)	8′-3″ (2.515 m)	8′-6″ (2.591 m)	5 1/2 (140)	*	1:1.7
72 (1800)	12520 (5680)	7 (178)	36 (914)	6′-6″ (1.981 m)	21 (533)	8′-3″ (2.514 m)	9′-0″ (2.743 m)	6 (152)	*	1:1.8
78 (1950)	14770 (6700)	7 1/2 (191)	36 (914)	7′-6″ (2.286 m)	21 (533)	9′-3″ (2.819 m)	9′-6″ (2.896 m)	6 1/2 (165)	*	1:1.8
84 (2100)	18160 (8240)	8 (203)	36 (914)	7′-6 1/2″ (2.299 m)	21 (533)	9′-3 1/2″ (2.832 m)	10′-0″ (3.048 m)	6 1/2 (165)	*	1:1.6

* Radius as furnished by manufacturer

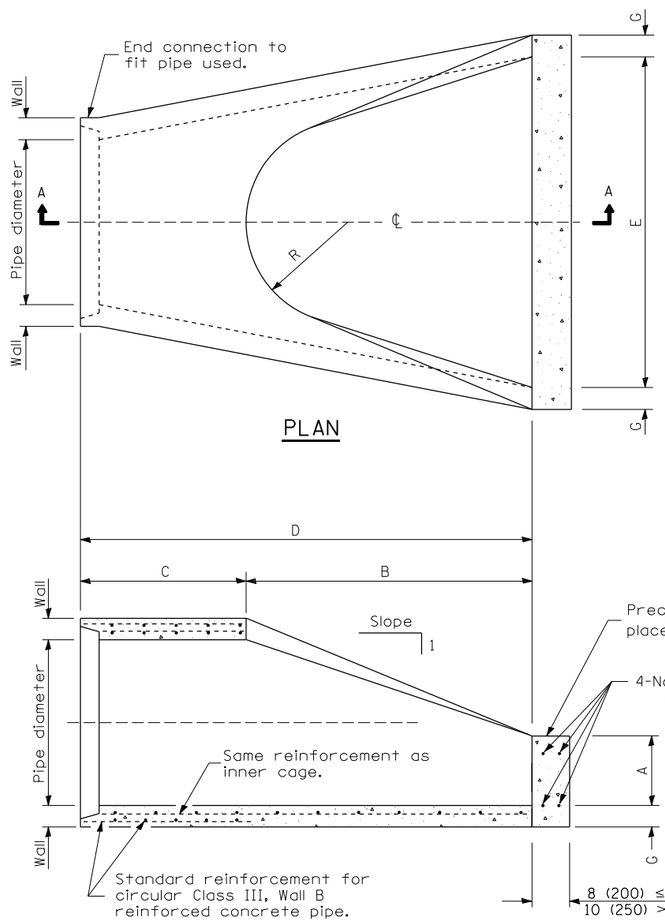

SECTION A-A

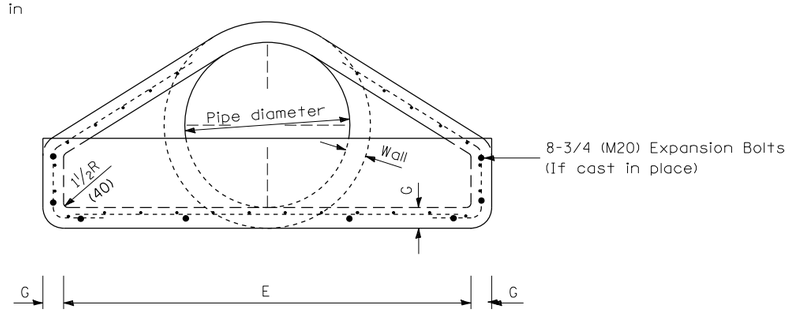

END VIEW

GENERAL NOTES

All slope ratios are expressed as units of vertical displacement to units of horizontal displacement (V:H).

All dimensions are in inches (millimeters) unless otherwise noted.

10-16-06	REVISED TO 2007 SPEC.	M.A.	

STATE OF ILLINOIS
DEPARTMENT OF TRANSPORTATION

PRECAST REINFORCED CONCRETE FLARED DROP BOX END SECTION

NOT TO SCALE — CADD STD. 542301-D4

F.A. RTE.	SECTION	COUNTY	TOTAL SHEETS	SHEET NO.
		CONTRACT NO.		
FED. ROAD DIST. NO.	ILLINOIS	FED. AID PROJECT		

CiorbaGroup
8725 W. Higgins Rd, Ste 600, Chicago, IL 60631
P 773.775.4009 | www.ciorba.com

USER NAME = Roadway	DESIGNED - AEC	REVISED -	
	DRAWN - AMS	REVISED -	
PLOT SCALE = 105.0104 ' / in.	CHECKED - NDF	REVISED -	
PLOT DATE = 12/18/2024	DATE - 5/31/2024	REVISED -	

STATE OF ILLINOIS
DEPARTMENT OF TRANSPORTATION

IL 180 WIDENING AND RESURFACING
IDOT DISTRICT 4 STANDARD DETAILS

SCALE: | SHEET OF SHEETS | STA. TO STA.

F.A.S. RTE.	SECTION	COUNTY	TOTAL SHEETS	SHEET NO.
1195	*	KNOX	409	280
~ 110RS-5;(111,112,108X-1)W,RS-3		CONTRACT NO. 68E50		
	ILLINOIS	FED. AID PROJECT		

DATE PLOTTED = 12/18/2024 10:50:21 AM
PWA TARGET = D2710400.pwt
PLOT CONFIG = CGI-PDF.pltcfg
MODEL: $MODELNAMES
FILE NAME: N:\PROJ\0021484.07\CADD\ShtDetails\D468E50-DETN.dgn

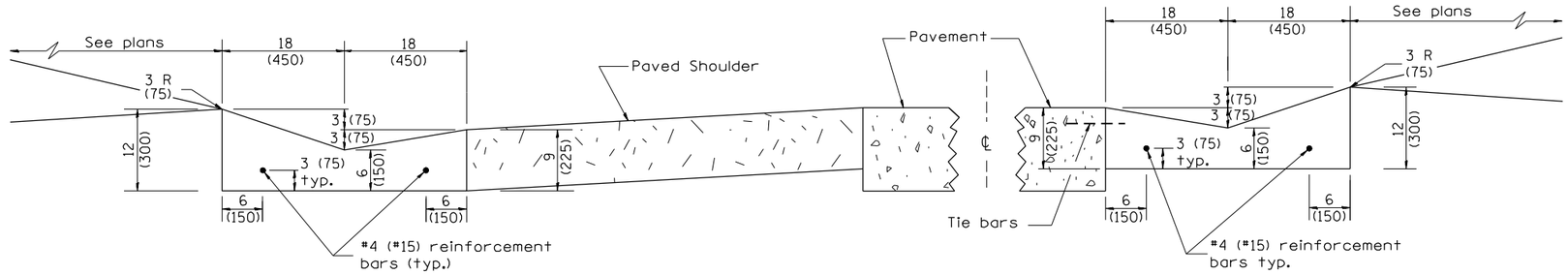

SHOULDER EDGE GUTTER

PAVEMENT EDGE GUTTER

CONCRETE GUTTER, TYPE A, (SPECIAL)

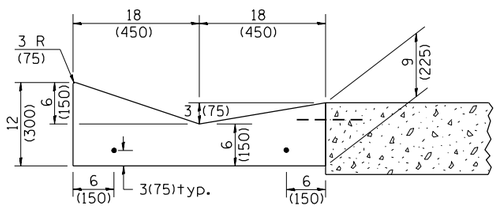

SECTION A-A

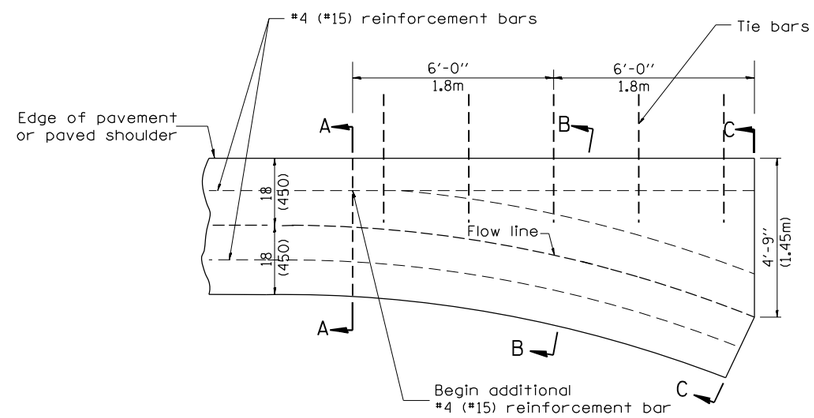

PLAN

QUANTITY

Section C-C to A-A= 1.2 cu. yd. (0.92 m^3) concrete.

GENERAL NOTES:

1. CONCRETE GUTTER, TYPE A, (SPECIAL) shall conform to the applicable portions of Section 606.
2. Tie bars shall be No. 6x24 (No. 19x600) at 36" (900mm) centers unless otherwise shown.
3. Gutter, gutter inlets, gutter outlets, and gutter entrances shall be tied to rigid pavement in accordance with details shown on Standard 420001.
4. Joints shall be constructed in accordance with Article 606.06.
5. Welded wire fabric shall conform to Article 1006.10(c)(1), and shall not be less than 58 lbs/100 sq.ft. (2.83 kg/m^2).

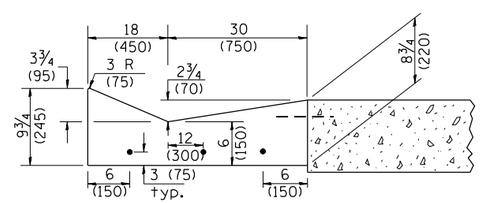

SECTION B-B

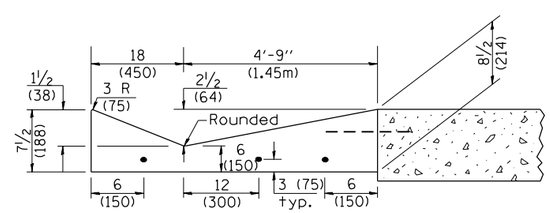

SECTION C-C

INLET

QUANTITIES	
CALC. BY: _____	DATE:
CHECKED BY: _____	DATE:

QUANTITY CALCULATIONS ARE ON FILE AT THE DISTRICT 4 OFFICE; BUREAU OF PROJECT IMPLEMENTATION; DOCUMENTATION SECTION

All dimensions are in inches (millimeters) unless otherwise noted.

01-01-97	RENUM. A-1.02, NEW REVISION BOX, ELIMINATED	T.P.	01-10-07	REVISED QUANTITY	M.A.
	EXPANSION ANCHOR TIES		11-16-07	REVISED QUANTITY	M.A.
02-28-02	ENTRANCE TYPICALS REVISED	M.A.	02-15-11	CHANGED MODIFIED TO SPECIAL	R.D.
10-16-06	REVISED TO 2007 SPEC.	M.A.	01-31-18	REVISED TIE BAR SIZE & SPACING	R.D.

STATE OF ILLINOIS
DEPARTMENT OF TRANSPORTATION

CONCRETE GUTTER, TYPE A, (SPECIAL)
(INLET, OUTLET & ENTRANCE)

NOT TO SCALE

F.A. RTE.	SECTION	COUNTY	TOTAL SHEETS	SHEET NO.
			3	1
		CONTRACT NO.		
FED. ROAD DIST. NO.	ILLINOIS	FED. AID PROJECT		

CiorbaGroup
8725 W. Higgins Rd, Ste 600, Chicago, IL 60631
P 773.775.4009 | www.ciorba.com

USER NAME = Roadway	DESIGNED - AEC	REVISED -	
	DRAWN - AMS	REVISED -	
PLOT SCALE = 105.0104 ' / in.	CHECKED - NDF	REVISED -	
PLOT DATE = 12/18/2024	DATE - 5/31/2024	REVISED -	

STATE OF ILLINOIS
DEPARTMENT OF TRANSPORTATION

IL 180 WIDENING AND RESURFACING
IDOT DISTRICT 4 STANDARD DETAILS

SCALE: SHEET OF SHEETS STA. TO STA.

F.A.S. RTE.	SECTION	COUNTY	TOTAL SHEETS	SHEET NO.
1195	*	KNOX	409	281
* 110RS-5;(111,112,108X-1)W,RS-3		CONTRACT NO. 68E50		
		ILLINOIS	FED. AID PROJECT	

DATE PLOTTED = 12/18/2024 10:50:22 AM
PLOT SCALE = 0.2000 ' / in.
PLOT CONFIG = CGI-PDF.pltcfg
MODEL: $MODEL$NAMES
FILE NAME: N:\PROJ\0021484.07\CADD\ShtDetails\D468E50-09TTA.dgn

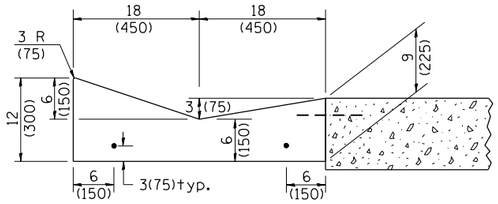

SECTION A-A

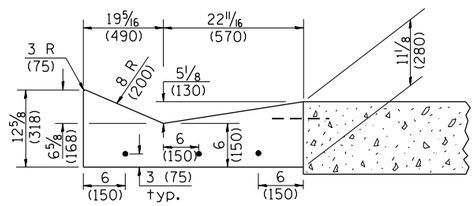

SECTION B-B

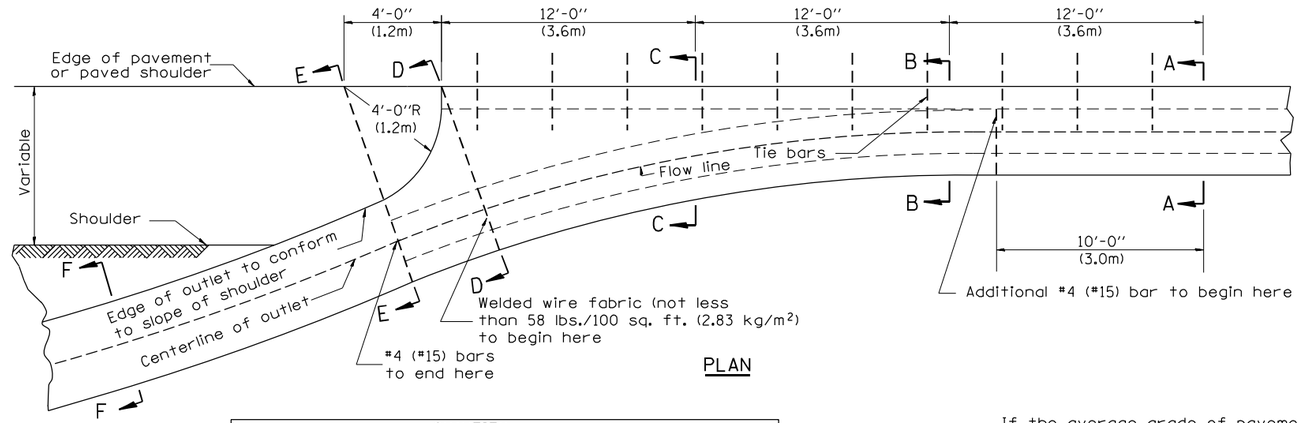

PLAN

QUANTITY

Section A-A to E-E= 4.5 cu. yd. (3.36 m³) concrete.
Section E-E to F-F= 0.10 cu. yd./ft. (0.26 m³/m) concrete.

If the average grade of pavement for the distance from section A-A to section D-D exceeds 2%, this distance shall be increased 6 ft. (1.8 m) for each 1% increase in grade. A quantity adjustment is required.

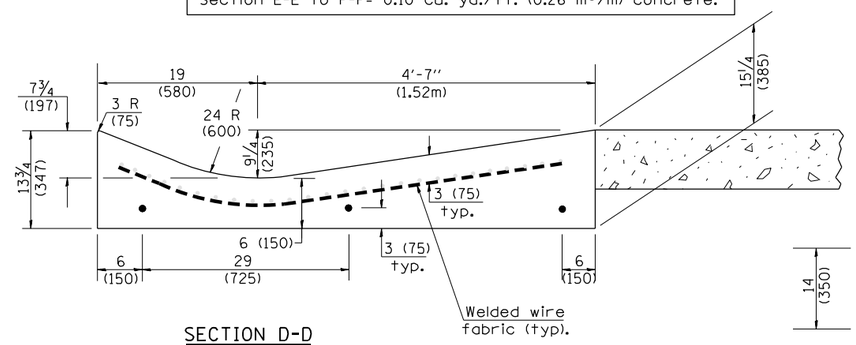

SECTION D-D

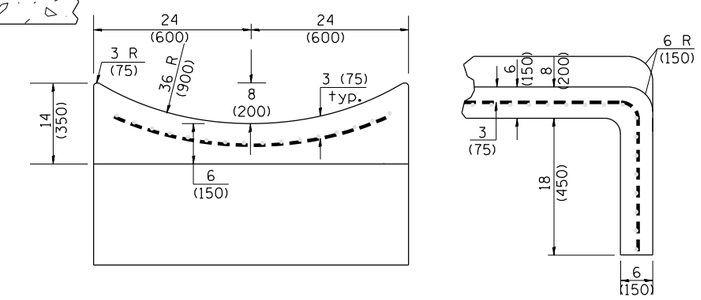

SECTIONS AT END OF OUTLET
(CURTAIN WALL)

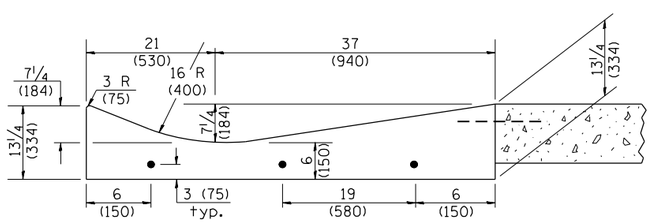

SECTION C-C

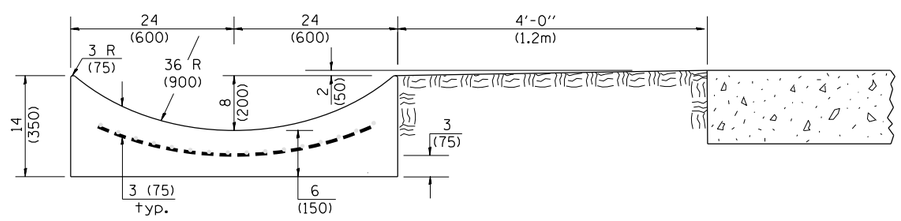

SECTION E-E

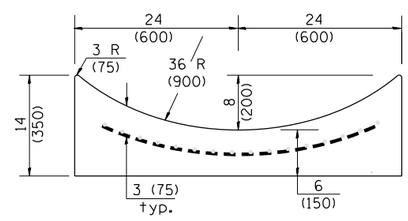

SECTION F-F

QUANTITY

Curtain Wall = 0.1 cu. yd. (0.08 m³) concrete.

QUANTITIES	
CALC. BY:	DATE:
CHECKED BY:	DATE:

QUANTITY CALCULATIONS ARE ON FILE AT THE DISTRICT 4 OFFICE; BUREAU OF PROJECT IMPLEMENTATION; DOCUMENTATION SECTION

OUTLET

All dimensions are in inches (millimeters) unless otherwise noted.

STATE OF ILLINOIS
DEPARTMENT OF TRANSPORTATION

CONCRETE GUTTER, TYPE A, (SPECIAL)
(INLET, OUTLET & ENTRANCE)

NOT TO SCALE

F.A. RTE.	SECTION	COUNTY	TOTAL SHEETS	SHEET NO.
			3	2
CONTRACT NO.				
FED. ROAD DIST. NO.	ILLINOIS	FED. AID PROJECT		

CiorbaGroup
8725 W. Higgins Rd, Ste 600, Chicago, IL 60631
P 773.775.4009 | www.ciorba.com

USER NAME = Roadway	DESIGNED - AEC	REVISED -	
	DRAWN - AMS	REVISED -	
PLOT SCALE = 105.0104 ' / in.	CHECKED - NDF	REVISED -	
PLOT DATE = 12/18/2024	DATE - 5/31/2024	REVISED -	

STATE OF ILLINOIS
DEPARTMENT OF TRANSPORTATION

IL 180 WIDENING AND RESURFACING
IDOT DISTRICT 4 STANDARD DETAILS

SCALE: | SHEET OF SHEETS | STA. TO STA.

F.A.S. RTE.	SECTION	COUNTY	TOTAL SHEETS	SHEET NO.
1195	*	KNOX	409	282
* 110RS-5;(111,112,108X-1)W,RS-3		CONTRACT NO. 68E50		
	ILLINOIS	FED. AID PROJECT		

DATE PLOTTED = 12/18/2024 10:50:22 AM
PWL FILE = 0021484.pwl
PLOT CONFIG = CGI-PDF.pltcfg
MODEL: $MODELNAME$
FILE NAME: N:\PROJ\0021484.07\CADD\ShtDetails\0468E50-DETO.dgn

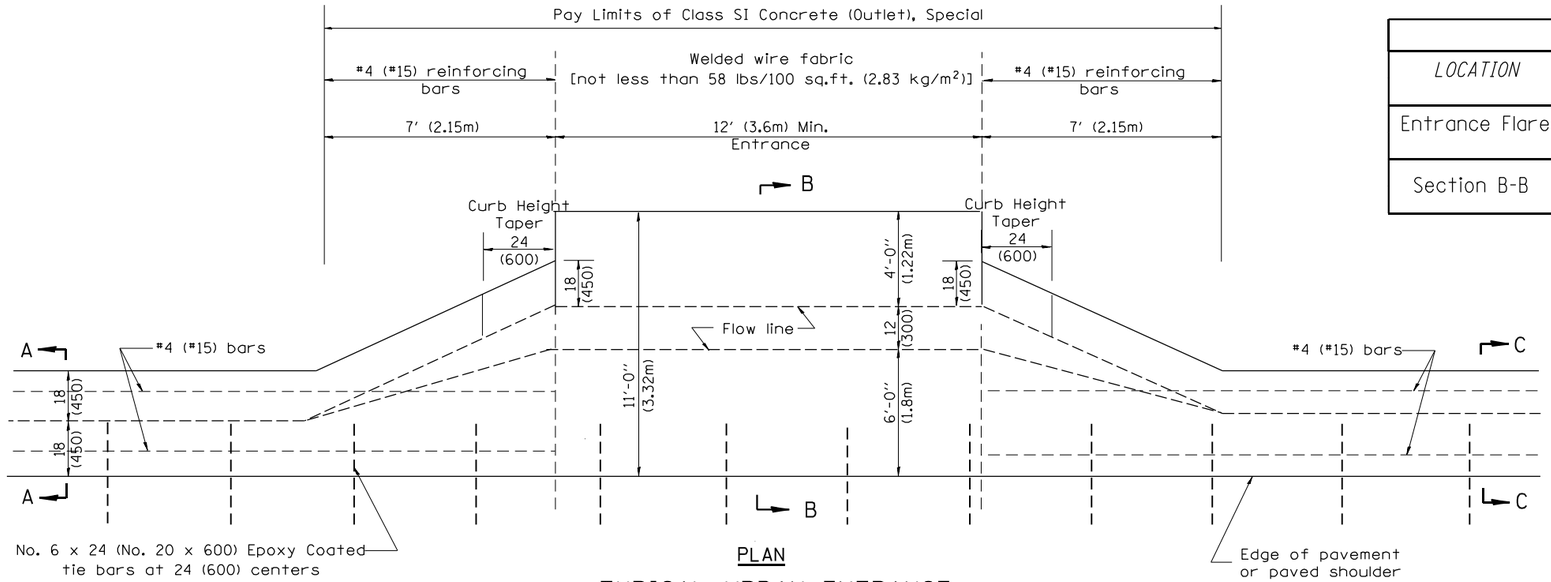

PLAN

TYPICAL URBAN ENTRANCE

QUANTITY CALCULATION			
LOCATION	*LENGTH*	*NON-COMMERCIAL 6 (150)*	*COMMERCIAL ENTRANCE 8 (200)*
Entrance Flare	7 Ft (2.15 m) Urban 14 Ft (4.30 m) Rural	0.15 Cu Yd / Ft (0.37 Cu M / M)	0.18 Cu Yd / Ft (0.45 Cu M / M)
Section B-B	See Plans	0.23 Cu Yd / Ft (0.57 Cu M / M)	0.28 Cu Yd / Ft (0.70 Cu M / M)

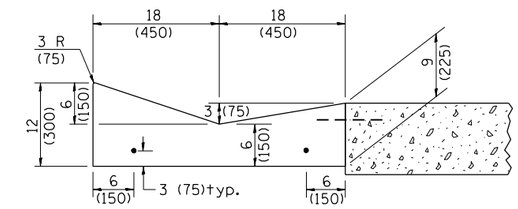

SECTION A-A & C-C

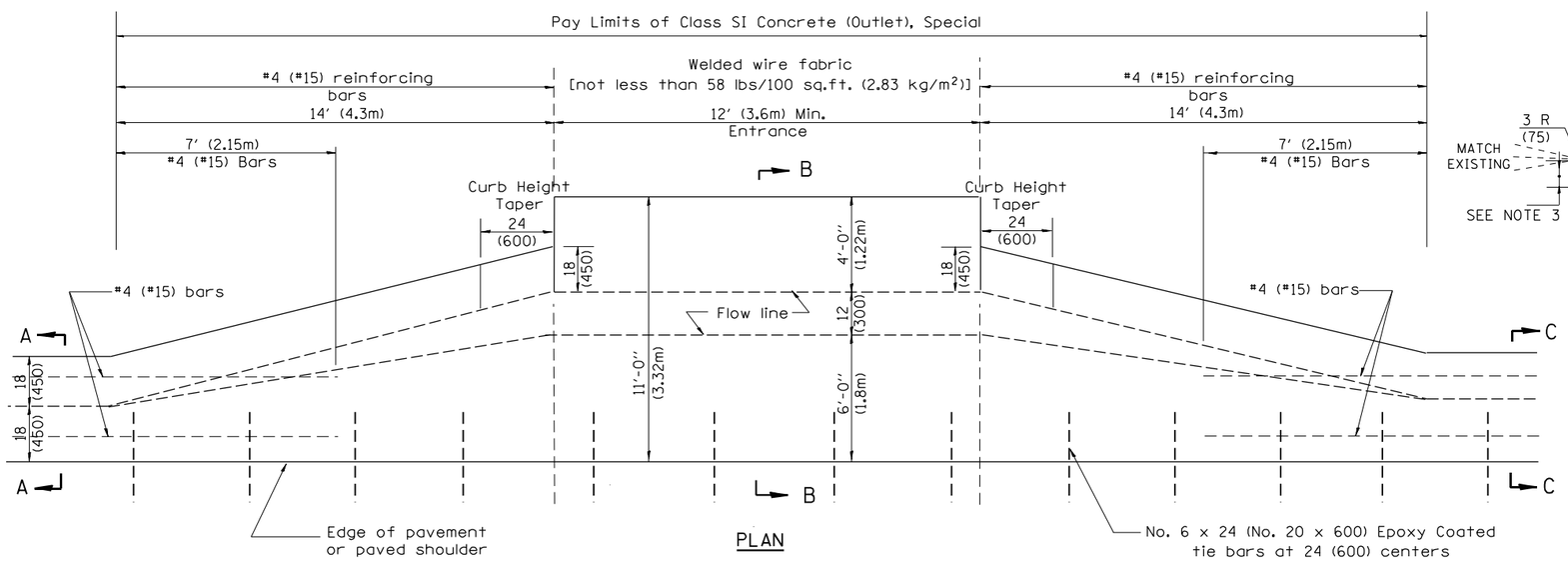

PLAN

TYPICAL RURAL ENTRANCE

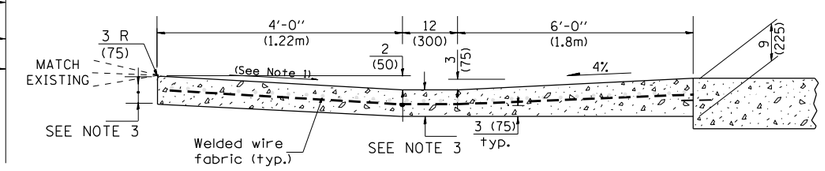

SECTION B-B

ENTRANCE

GENERAL NOTES

1.) Slope may be increased from 4% (min.) to 6% (max.) in order to match the existing.

2.) The cross-slope is to be constructed as given in the plans from back turnout to where driveway matches existing.

3.) For Non-Commercial Entrances the driveway thickness shall be 6 (150). For Commercial Entrances the driveway thickness shall be 8 (200).

QUANTITIES

CALC. BY: _____ DATE: _____

CHECKED BY: _____ DATE: _____

QUANTITY CALCULATIONS ARE ON FILE AT THE DISTRICT 4 OFFICE; BUREAU OF PROJECT IMPLEMENTATION; DOCUMENTATION SECTION

All dimensions are in inches (millimeters) unless otherwise noted.

STATE OF ILLINOIS
DEPARTMENT OF TRANSPORTATION

CONCRETE GUTTER, TYPE A, (SPECIAL)
(INLET, OUTLET & ENTRANCE)

NOT TO SCALE

F.A. RTE.	SECTION	COUNTY	TOTAL SHEETS	SHEET NO.
			3	3
		CONTRACT NO.		
FED. ROAD DIST. NO.	ILLINOIS	FED. AID PROJECT		

CiorbaGroup
8725 W. Higgins Rd, Ste 600, Chicago, IL 60631
P 773.775.4009 | www.ciorba.com

USER NAME = Roadway	DESIGNED - AEC	REVISED -	
	DRAWN - AMS	REVISED -	
PLOT SCALE = 105.0104 ' / in.	CHECKED - NDF	REVISED -	
PLOT DATE = 12/18/2024	DATE - 5/31/2024	REVISED -	

STATE OF ILLINOIS
DEPARTMENT OF TRANSPORTATION

IL 180 WIDENING AND RESURFACING
IDOT DISTRICT 4 STANDARD DETAILS

SCALE: SHEET OF SHEETS STA. TO STA.

F.A.S. RTE.	SECTION	COUNTY	TOTAL SHEETS	SHEET NO.
1195	*	KNOX	409	283
*	110RS-5;(111,112,108X-1)W,RS-3	CONTRACT NO. 68E50		
		ILLINOIS	FED. AID PROJECT	

DATE PLOTTED = 12/18/2024 10:50:23 AM
PLOT SCALE = 0.0104 ' / in.
PLOT CONFIG = CGI-PDF.pltcfg
MODEL: $MODELNAMES
FILE NAME: N:\PROJ\0021484,07\CADD\ShtDetails\0468E50-DETR.dgn

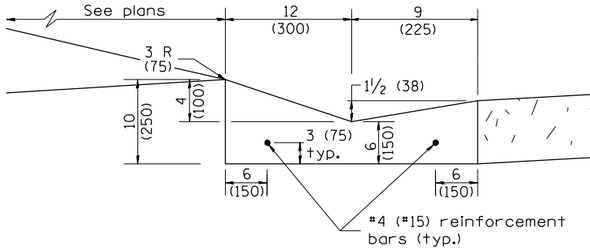

SHOULDER EDGE GUTTER

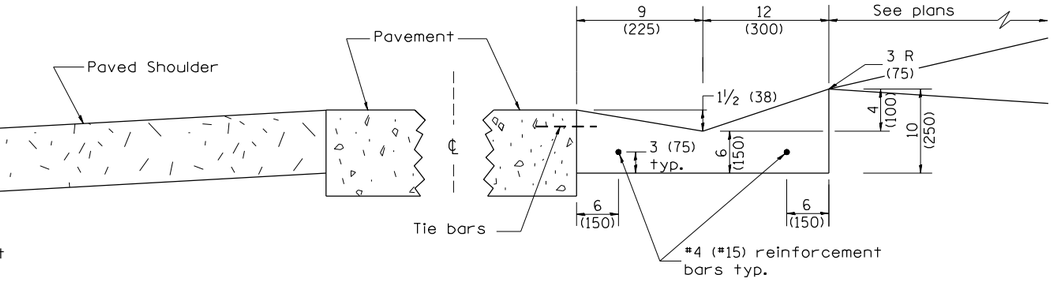

PAVEMENT EDGE GUTTER

CONCRETE GUTTER, TYPE B, (SPECIAL)

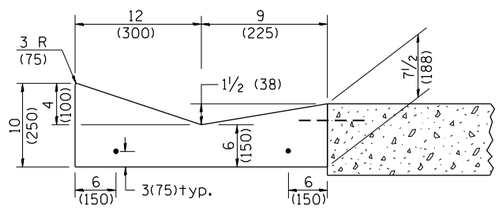

SECTION A-A

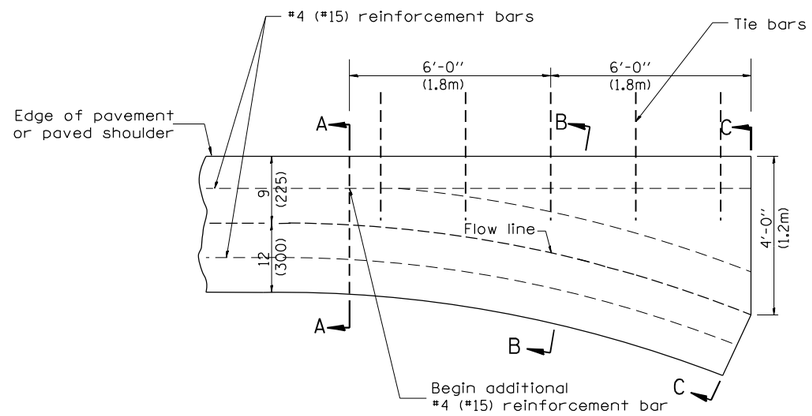

PLAN

QUANTITY
Section C-C to A-A=
0.73 cu. yd. concrete.

GENERAL NOTES:

1. CONCRETE GUTTER, TYPE B (SPECIAL) shall conform to the the applicable portions of Section 606.
2. Tie bars shall be No. 6x24 (No. 19x600) at 36" (900mm) centers unless otherwise shown.
3. Gutter, gutter inlets, gutter outlets, and gutter entrances shall be tied to rigid pavement in accordance with details shown on Standard 420001.
4. Joints shall be constructed in accordance with Article 606.06.
5. Welded wire fabric shall conform to Article 1006.10(c)(1), and shall not be less than 58 lbs/100 sq.ft. (2.83 kg/m²).

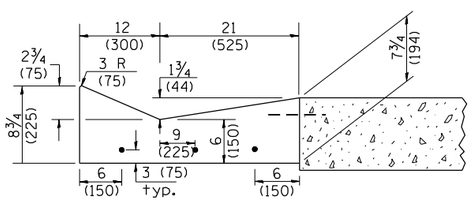

SECTION B-B

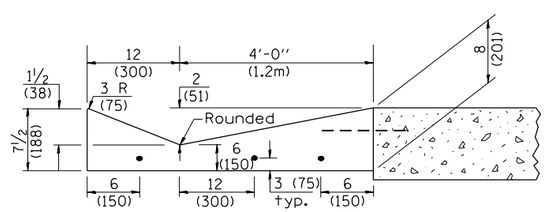

SECTION C-C

INLET

All dimensions are in inches (millimeters) unless otherwise noted.

QUANTITIES

CALC. BY: _____ DATE:
CHECKED BY: _____ DATE:

QUANTITY CALCULATIONS ARE ON FILE AT THE DISTRICT 4 OFFICE; BUREAU OF PROJECT IMPLEMENTATION; DOCUMENTATION SECTION

01-01-97	RENUM. A-1.01, NEW REVISION BOX, ELIMINATED	T.P.	10-16-06	REVISED TO 2007 SPEC.	M.A.
	EXPANSION ANCHOR TIES		11-16-07	REVISED QUANTITY	M.A.
03-06-98	CORRECT DIMENSIONING	J.A.	02-15-11	CHANGED MODIFIED TO SPECIAL	R.D.
03-10-06	REVISED QUANTITY	M.A.	01-31-18	REVISED TIE BAR SIZE & SPACING	R.D.

STATE OF ILLINOIS
DEPARTMENT OF TRANSPORTATION

CONCRETE GUTTER, TYPE B, (SPECIAL)
(INLET, OUTLET & ENTRANCE)
NOT TO SCALE
SHT. 1 OF 3
CADD STD. 606201-D4

F.A.S. RTE.	SECTION	COUNTY	TOTAL SHEETS	SHEET NO.
		CONTRACT NO.		
FED. ROAD DIST. NO.	ILLINOIS	FED. AID PROJECT		

DESIGNER NOTES:
1. INCLUDE STATE std. 420001.

DATE PLOTTED = 12/18/2024 10:50:23
PRINT SCALE = 1020.0000 : 1 in.
PLOT CONFIG = CGI-PDF.pltcfg
MODEL: $MODEL$NAMES
FILE NAME: N:\PROJ\6021484.07\CADD\SHEETdetails\D46BE50-SHT75.dgn

CiorbaGroup
8725 W. Higgins Rd, Ste 600, Chicago, IL 60631
P 773.775.4009 | www.ciorba.com

USER NAME = Roadway	DESIGNED - AEC	REVISED -	
	DRAWN - AMS	REVISED -	
PLOT SCALE = 105.0104 ' / in.	CHECKED - NDF	REVISED -	
PLOT DATE = 12/18/2024	DATE - 5/31/2024	REVISED -	

STATE OF ILLINOIS
DEPARTMENT OF TRANSPORTATION

IL 180 WIDENING AND RESURFACING

SCALE: SHEET OF SHEETS STA. TO STA.

F.A.S. RTE.	SECTION	COUNTY	TOTAL SHEETS	SHEET NO.
1195	*	KNOX	409	284
~	110RS-5;(111,112,108X-1)W,RS-3	CONTRACT NO.		68E50
		ILLINOIS	FED. AID PROJECT	

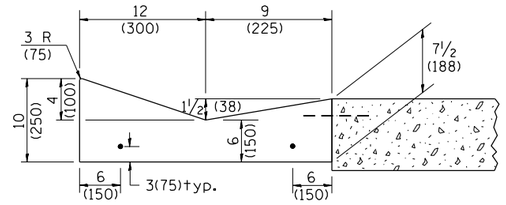

SECTION A-A

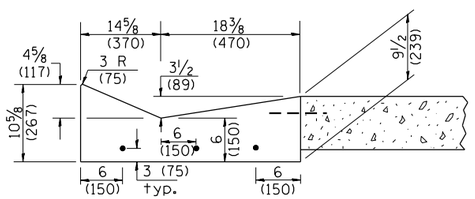

SECTION B-B

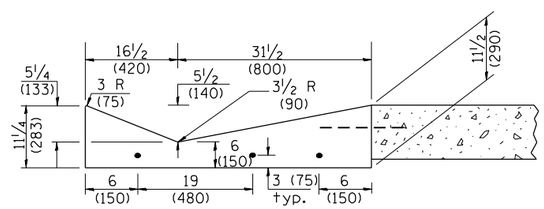

SECTION C-C

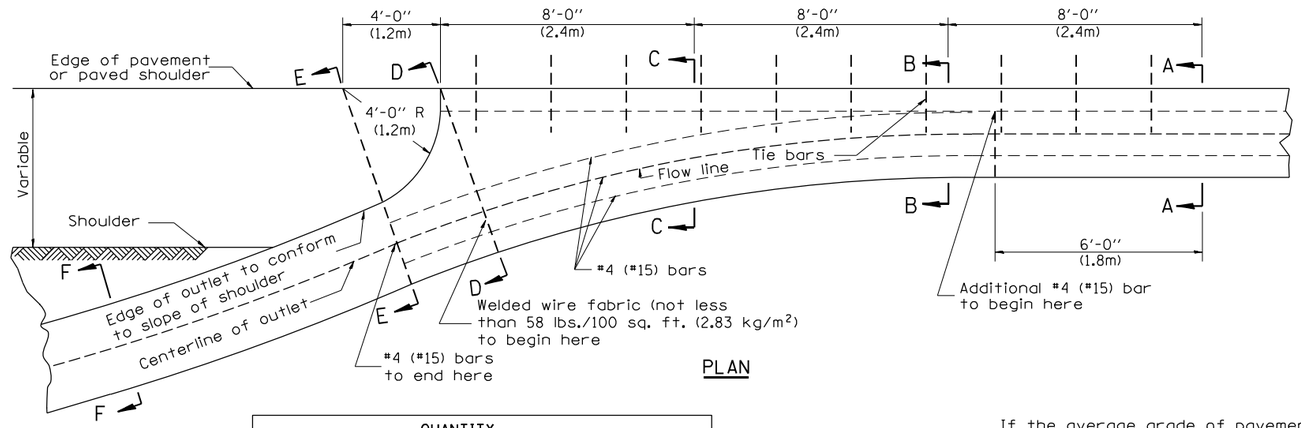

PLAN

QUANTITY

Section A-A to E-E= 2.81 cu. yd. concrete.
Section E-E to F-F= 0.09 cu. yd./ft. concrete.

If the average grade of pavement for the distance from section A-A to section D-D exceeds 2%, this distance shall be increased 6 ft. (1.8m) for each 1% increase in grade. A quantity adjustment is required.

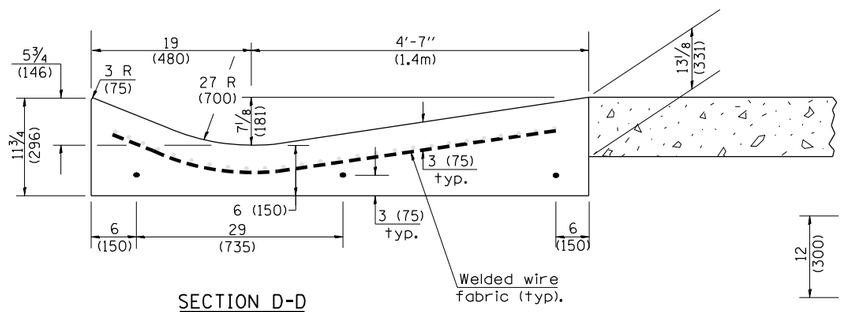

SECTION D-D

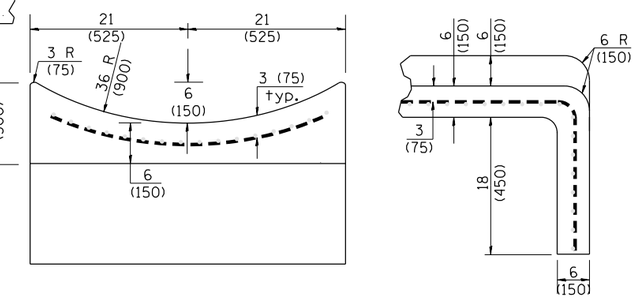

SECTIONS AT END OF OUTLET
(CURTAIN WALL)

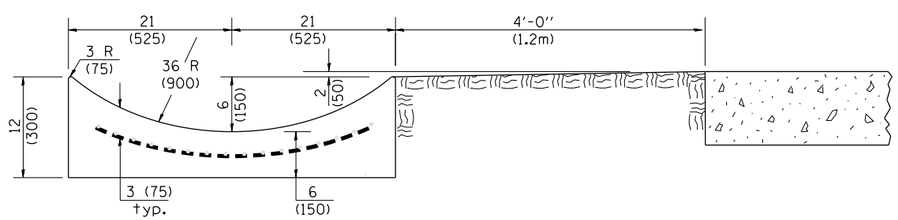

SECTION E-E

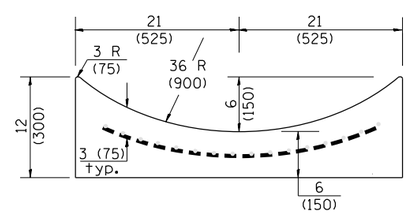

SECTION F-F

QUANTITY

Curtain Wall =
0.1 cu. yd. concrete.

QUANTITIES

CALC. BY: _____ DATE:
CHECKED BY: _____ DATE:

QUANTITY CALCULATIONS ARE ON FILE AT THE DISTRICT 4 OFFICE; BUREAU OF PROJECT IMPLEMENTATION; DOCUMENTATION SECTION

OUTLET

All dimensions are in inches (millimeters) unless otherwise noted.

STATE OF ILLINOIS
DEPARTMENT OF TRANSPORTATION

CONCRETE GUTTER, TYPE B, (SPECIAL)
(INLET, OUTLET & ENTRANCE)

NOT TO SCALE

SHT. 2 OF 3
CADD STD. 606201-D4

F.A. RTE.	SECTION	COUNTY	TOTAL SHEETS	SHEET NO.
		CONTRACT NO.		
FED. ROAD DIST. NO.	ILLINOIS	FED. AID PROJECT		

CiorbaGroup
8725 W. Higgins Rd, Ste 600, Chicago, IL 60631
P 773.775.4009 | www.ciorba.com

USER NAME = Roadway	DESIGNED - AEC	REVISED -	
	DRAWN - AMS	REVISED -	
PLOT SCALE = 105.0104 ' / in.	CHECKED - NDF	REVISED -	
PLOT DATE = 12/18/2024	DATE - 5/31/2024	REVISED -	

STATE OF ILLINOIS
DEPARTMENT OF TRANSPORTATION

IL 180 WIDENING AND RESURFACING

SCALE: SHEET OF SHEETS STA. TO STA.

F.A.S. RTE.	SECTION	COUNTY	TOTAL SHEETS	SHEET NO.
1195	*	KNOX	409	285
*	110RS-5;(111,112,108X-1)W,RS-3	CONTRACT NO.		68E50
		ILLINOIS FED. AID PROJECT		

DATE PLOTTED = 12/18/2024 10:50:24 AM
DATE SAVED = 12/18/2024 10:50:24 AM
PLOT CONFIG = CGI-PDF.pltcfg
MODEL: $MODELNAMES
FILE NAME: N:\PROJ\0021484.07\CADD\ShtDetails\D468E50-DET26.dgn

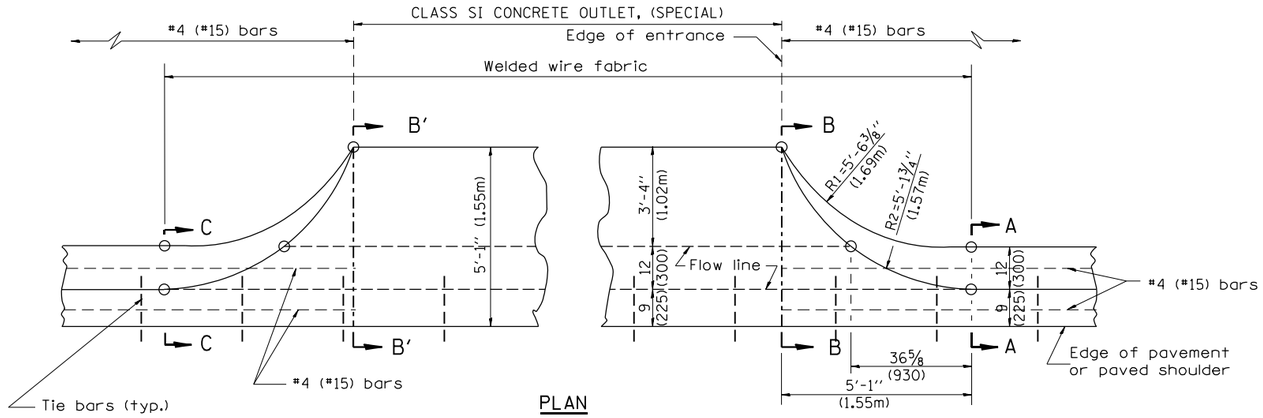

PLAN

TYPICAL URBAN ENTRANCE

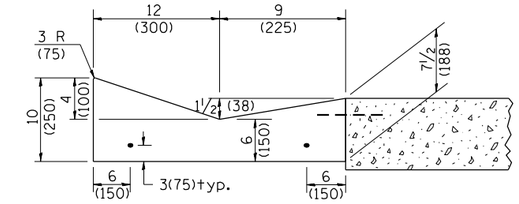

SECTION A-A & C-C

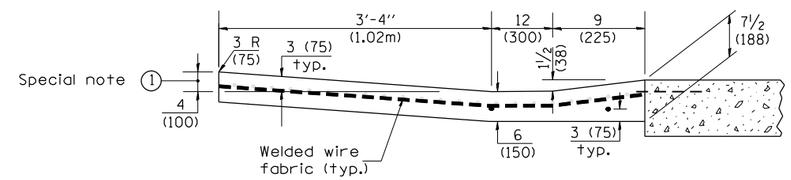

SECTION B-B & B'-B'

QUANTITY
URBAN ENTRANCE

Section B'-B' to B-B=
0.1 cu. yd./ft.
Section C-C to B'-B' + B-B to A-A=
0.69 cu. yd.

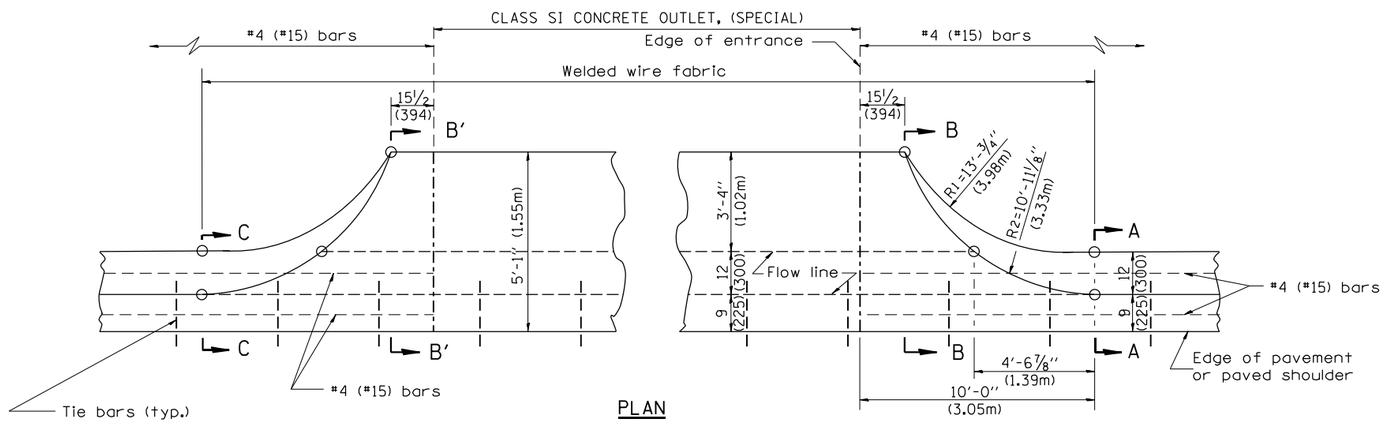

PLAN

TYPICAL RURAL ENTRANCE

SPECIAL NOTES:

1. 4 (100) is the normal dimension.
If specified in the plans, the following shall be used for improved entrance match-up: Minimum - 2 1/2 (65)
Maximum - 5 (125)

QUANTITY
RURAL ENTRANCE

Section B'-B' to B-B=
0.1 cu. yd./ft.
Section C-C to B'-B' + B-B to A-A=
1.19 cu. yd.

QUANTITIES

CALC. BY: _____ DATE: _____
CHECKED BY: _____ DATE: _____

QUANTITY CALCULATIONS ARE ON FILE AT THE DISTRICT 4 OFFICE; BUREAU OF PROJECT IMPLEMENTATION; DOCUMENTATION SECTION

All dimensions are in inches (millimeters) unless otherwise noted.

STATE OF ILLINOIS
DEPARTMENT OF TRANSPORTATION

CONCRETE GUTTER, TYPE B, (SPECIAL)
(INLET, OUTLET & ENTRANCE)
NOT TO SCALE
SHT. 3 OF 3
CADD STD. 606201-D4

F.A. RTE.	SECTION	COUNTY	TOTAL SHEETS	SHEET NO.
		CONTRACT NO.		
FED. ROAD DIST. NO.	ILLINOIS	FED. AID PROJECT		

CiorbaGroup
8725 W. Higgins Rd, Ste 600, Chicago, IL 60631
P 773.775.4009 | www.ciorba.com

USER NAME = Roadway	DESIGNED - AEC	REVISED -	
	DRAWN - AMS	REVISED -	
PLOT SCALE = 105.0104 ' / in.	CHECKED - NDF	REVISED -	
PLOT DATE = 12/18/2024	DATE - 5/31/2024	REVISED -	

STATE OF ILLINOIS
DEPARTMENT OF TRANSPORTATION

IL 180 WIDENING AND RESURFACING

SCALE: SHEET OF SHEETS STA. TO STA.

F.A.S. RTE.	SECTION	COUNTY	TOTAL SHEETS	SHEET NO.
1195	*	KNOX	409	286
* 110RS-5;(111,112,108X-1)W,RS-3		CONTRACT NO. 68E50		
		ILLINOIS	FED. AID PROJECT	

DATE PLOTTED = 12/18/2024 10:50:24 AM
PENTABLE = 00216-60-07.tbl
PLOT CONFIG = CGI-PDF.pltcfg
MODEL: $MODELNAMES
FILE NAME: N:\PROJ\0021484.07\CADD\ShtDetails\0468E50-DET27.dgn

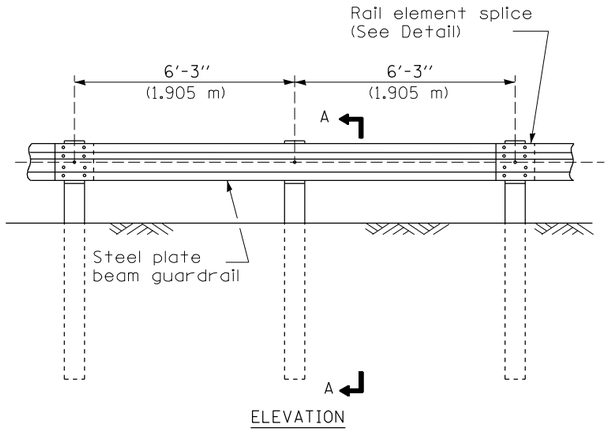

TYPE A

6'-3" (1.905 m) Typical post spacing

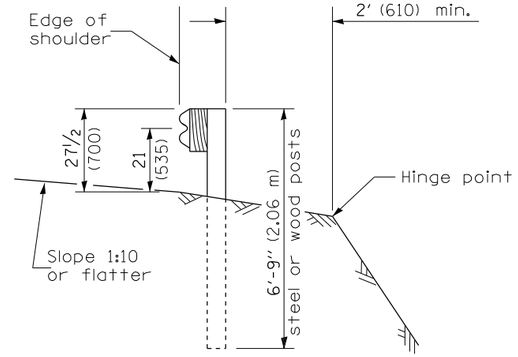

SECTION A-A

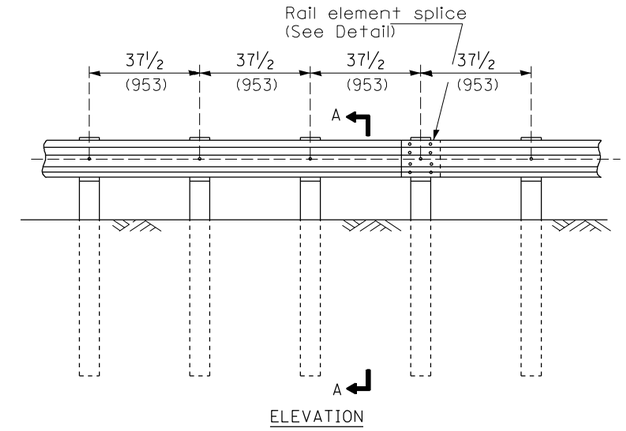

TYPE B

37½ (953) Closed post spacing

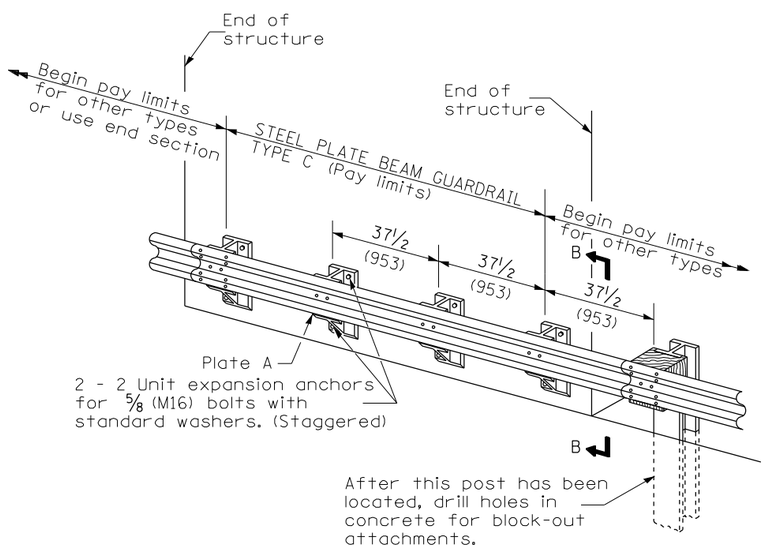

TYPE C

37½ (953) Block-out spacing

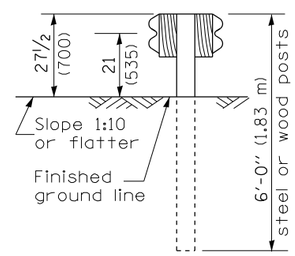

SECTION C-C

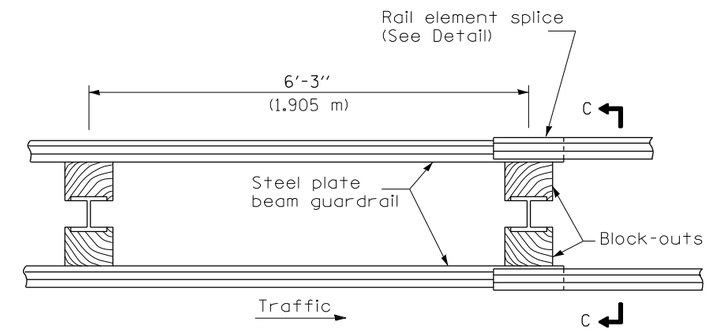

PLAN

TYPE D

Double steel plate beam guardrail
6'-3" (1.905 m) typical post spacing

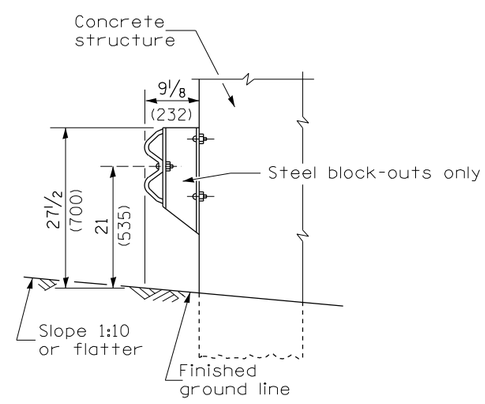

SECTION B-B

GENERAL NOTES

All slope ratios are expressed as units of vertical displacement to units of horizontal displacement (V:H).

All dimensions are in millimeters (inches) unless otherwise shown.

The existing steel posts may be drilled to match the bolt pattern shown herein for the wood block-out, or a new steel post shall be provided.

This detail is applicable to the guardrail system used prior to January 1, 2007. For details on the Midwest Guardrail System, see Standard 630001.

All dimensions are in inches (millimeters) unless otherwise noted.

03-01-07	NEW DETAIL	RJD
03-07-11	Revised designer note	RJD

STATE OF ILLINOIS
DEPARTMENT OF TRANSPORTATION

STEEL PLATE BEAM GUARDRAIL, TYPE A,
6.75 FOOT POSTS

NOT TO SCALE

F.A. RTE.	SECTION	COUNTY	TOTAL SHEETS	SHEET NO.
			4	1
		CONTRACT NO.		
FED. ROAD DIST. NO.	ILLINOIS	FED. AID PROJECT		

CiorbaGroup
8725 W. Higgins Rd, Ste 600, Chicago, IL 60631
P 773.775.4009 | www.ciorba.com

USER NAME = Roadway	DESIGNED - AEC	REVISED -	
	DRAWN - AMS	REVISED -	
PLOT SCALE = 105.0104 ' / in.	CHECKED - NDF	REVISED -	
PLOT DATE = 12/18/2024	DATE - 5/31/2024	REVISED -	

STATE OF ILLINOIS
DEPARTMENT OF TRANSPORTATION

IL 180 WIDENING AND RESURFACING
IDOT DISTRICT 4 STANDARD DETAILS

SCALE: SHEET OF SHEETS STA. TO STA.

F.A.S. RTE.	SECTION	COUNTY	TOTAL SHEETS	SHEET NO.
1195	"	KNOX	409	287
"	110RS-5:(111,112,108X-1)W,RS-3	CONTRACT NO. 68E50		
		ILLINOIS	FED. AID PROJECT	

DATE PLOTTED = 12/18/2024 10:50:25 AM
PENT TABLE = 0021BAOA.tbl
PLOT CONFIG = CGI-PDF.pltcfg
MODEL: $MODELNAMES
FILE NAME: N:\PROJ\0021484.07\CADD\ShtDetails\D468E50-DETQ.dgn

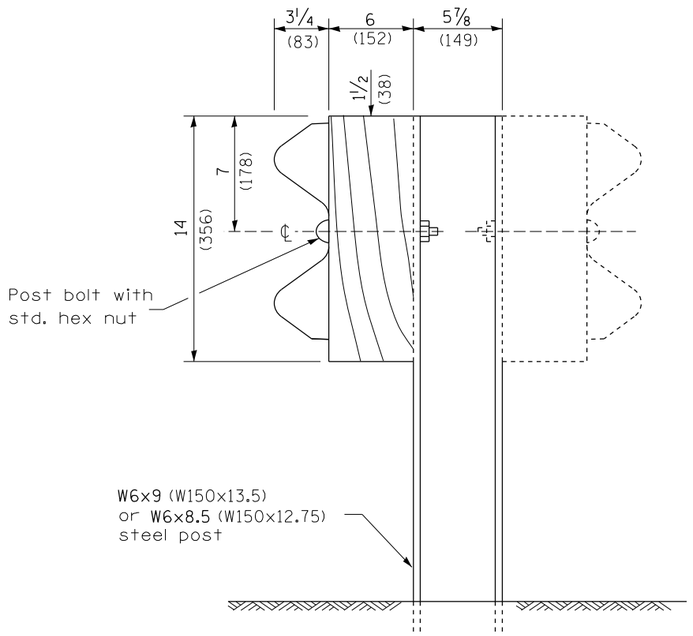

STEEL POST CONSTRUCTION

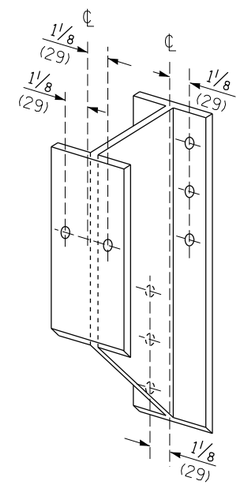

STEEL BLOCK-OUT DETAIL

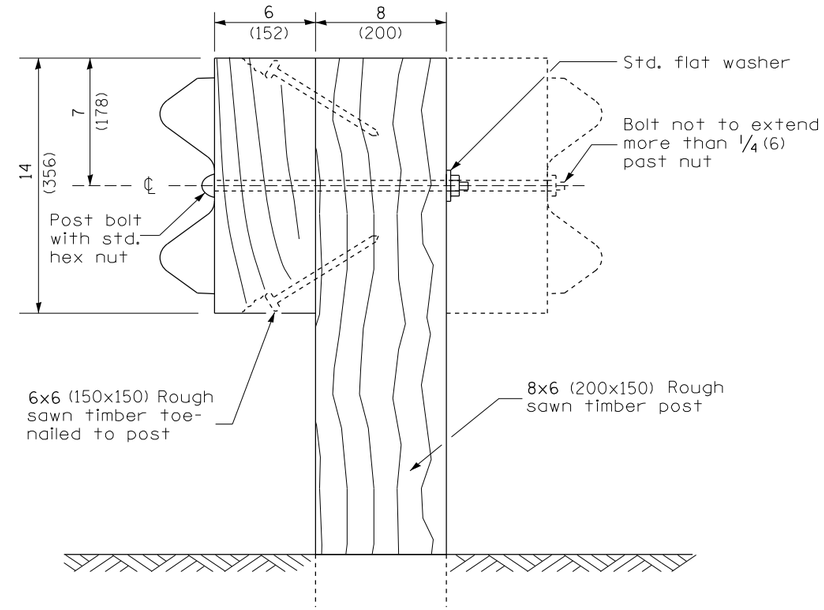

WOOD POST CONSTRUCTION

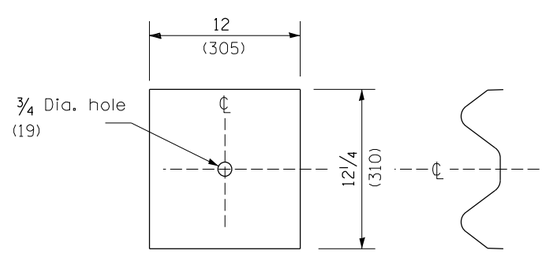

NOTE

Plate A shall be placed between rail element and block-out at non-splice mounting points only when steel block-outs are used.

PLATE A

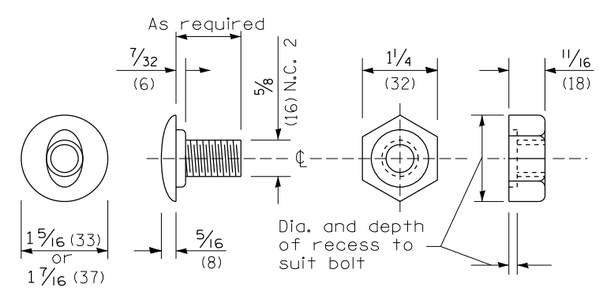

POST OR SPLICE BOLT & NUT

All dimensions are in inches (millimeters) unless otherwise noted.

STATE OF ILLINOIS
DEPARTMENT OF TRANSPORTATION

STEEL PLATE BEAM GUARDRAIL, TYPE A,
6.75 FOOT POSTS

NOT TO SCALE

F.A. RTE.	SECTION	COUNTY	TOTAL SHEETS	SHEET NO.
			4	2
		CONTRACT NO.		
FED. ROAD DIST. NO.	ILLINOIS	FED. AID PROJECT		

CiorbaGroup
8725 W. Higgins Rd, Ste 600, Chicago, IL 60631
P 773.775.4009 | www.ciorba.com

USER NAME = Roadway	DESIGNED - AEC	REVISED -	
	DRAWN - AMS	REVISED -	
PLOT SCALE = 105.0104 ' / in.	CHECKED - NDF	REVISED -	
PLOT DATE = 12/18/2024	DATE - 5/31/2024	REVISED -	

STATE OF ILLINOIS
DEPARTMENT OF TRANSPORTATION

IL 180 WIDENING AND RESURFACING
IDOT DISTRICT 4 STANDARD DETAILS

SCALE: SHEET OF SHEETS STA. TO STA.

F.A.S. RTE.	SECTION	COUNTY	TOTAL SHEETS	SHEET NO.
1195	*	KNOX	409	288
*	110RS-5:(111,112,108X-1)W,RS-3	CONTRACT NO. 68E50		
	ILLINOIS	FED. AID PROJECT		

DATE PLOTTED = 12/18/2024 10:50:25 AM
PLOT SCALE = 20.0000 ' / in.
PLOT CONFIG = CCI-PDF.pltcfg
MODEL: $MODEL NAMES
FILE NAME: N:\PROJ\1002 1484.07\CADD\SHTDetails\D468E50-DETR.dgn

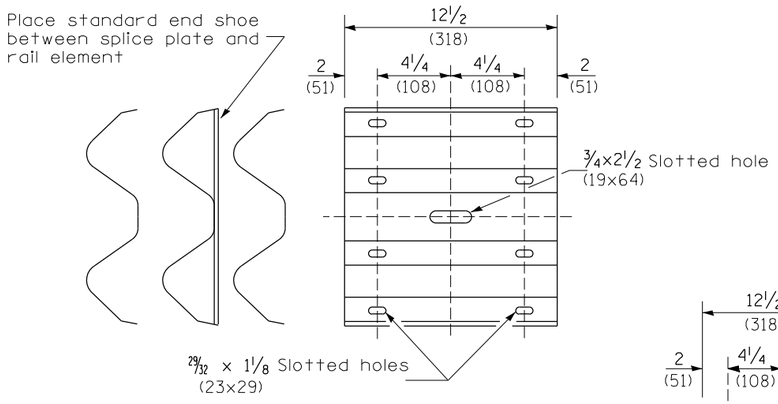

SPLICE PLATE

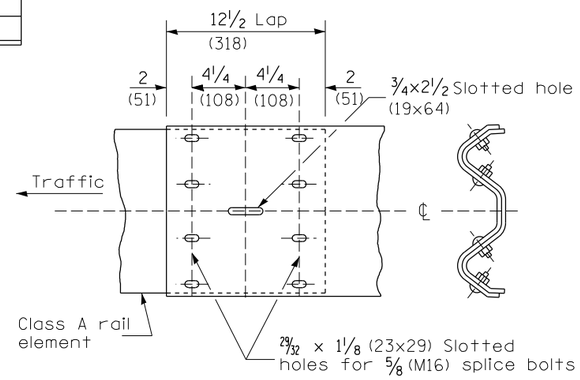

RAIL ELEMENT SPLICE

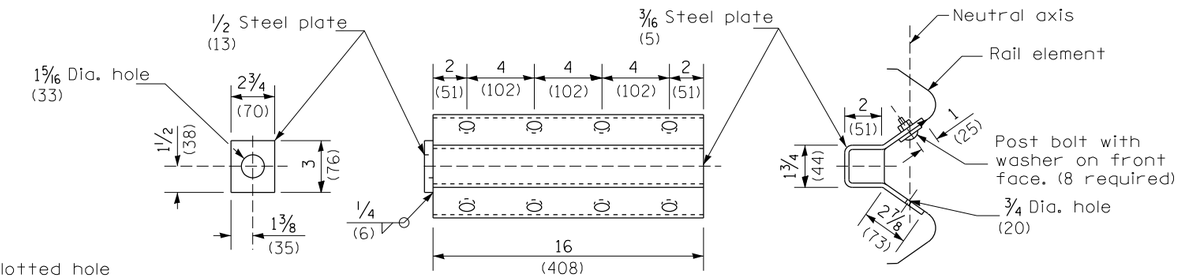

NOTE

Anchor plate T shall be used to attach cable assembly to guardrail when required on traffic barrier terminals.

ANCHOR PLATE T DETAILS

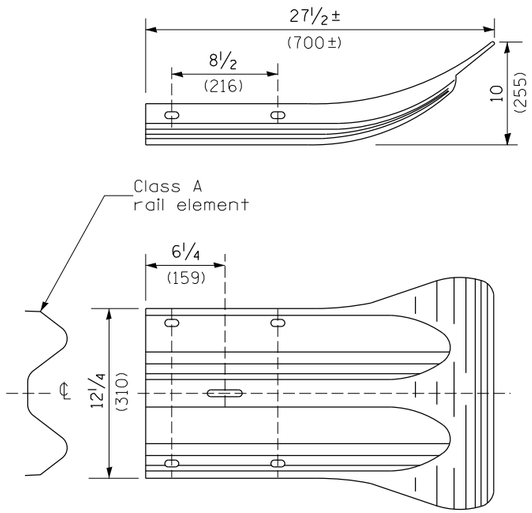

END SECTION

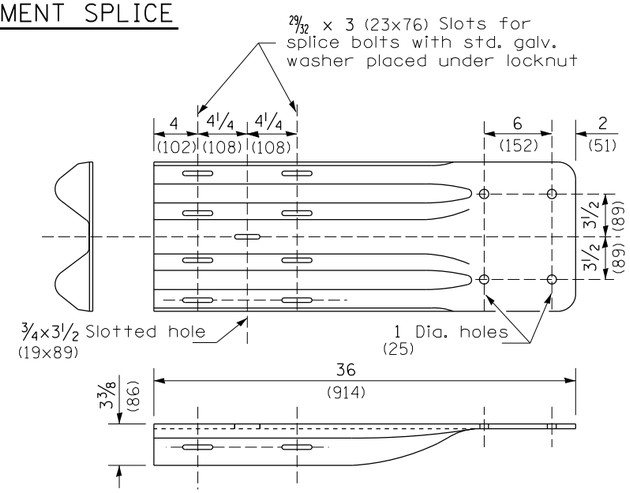

NOTE

When end shoe is attached to a bridge parapet which has an expansion joint, the bolts shall be provided with a locknut or double nut and shall be tightened only to a point that will allow guardrail movement.

The standard end shoe shall be attached to the concrete with pre-drilled or self-drilling anchor bolts. The anchor cone shall be set flush with the surface of the concrete.

Externally threaded studs protruding from the surface of the concrete will not be permitted.

END SHOE

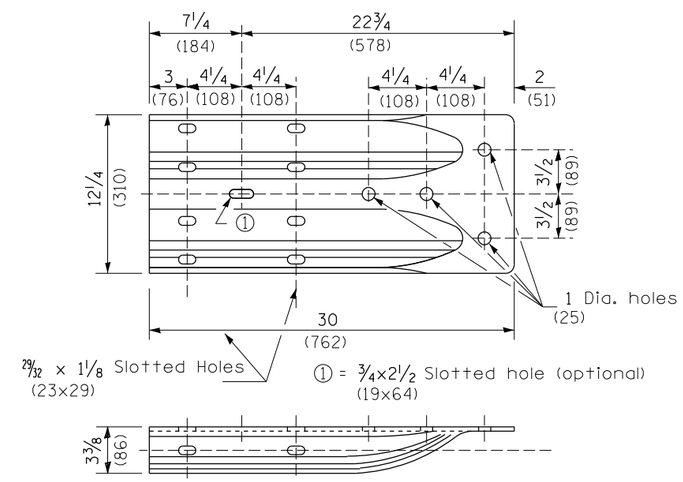

ALTERNATE END SHOE

All dimensions are in inches (millimeters) unless otherwise noted.

STATE OF ILLINOIS
DEPARTMENT OF TRANSPORTATION

STEEL PLATE BEAM GUARDRAIL, TYPE A, 6.75 FOOT POSTS

NOT TO SCALE

F.A. RTE.	SECTION	COUNTY	TOTAL SHEETS	SHEET NO.
			4	3
CONTRACT NO.				
FED. ROAD DIST. NO.	ILLINOIS	FED. AID PROJECT		

CiorbaGroup
8725 W. Higgins Rd, Ste 600, Chicago, IL 60631
P 773.775.4009 | www.ciorba.com

USER NAME = Roadway	DESIGNED - AEC	REVISED -	
	DRAWN - AMS	REVISED -	
PLOT SCALE = 105.0104 ' / in.	CHECKED - NDF	REVISED -	
PLOT DATE = 12/18/2024	DATE - 5/31/2024	REVISED -	

STATE OF ILLINOIS
DEPARTMENT OF TRANSPORTATION

IL 180 WIDENING AND RESURFACING
IDOT DISTRICT 4 STANDARD DETAILS

SCALE: SHEET OF SHEETS STA. TO STA.

F.A.S. RTE.	SECTION	COUNTY	TOTAL SHEETS	SHEET NO.
1195	-	KNOX	409	289
-	110RS-5:(111,112,108X-1)W,RS-3	CONTRACT NO. 68E50		
		ILLINOIS	FED. AID PROJECT	

DATE PLOTTED = 12/18/2024 10:50:26 AM
PLOT TIME = 0.0208333333333333 DAYS
PLOT CONFIG = CGI-PDF.pltcfg
MODEL: SMODEL NAMES
FILE NAME: N:\PROJ\0021484.07\CADD\SHtDetails\D468E50-DETS.dgn

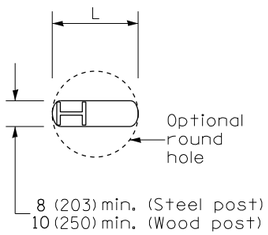

PLAN

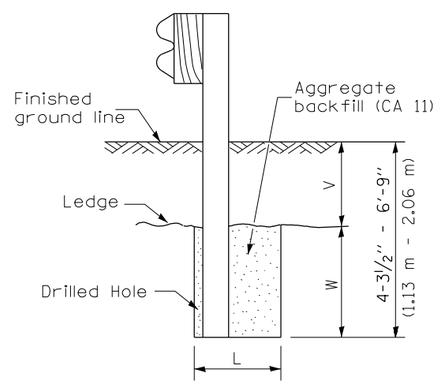

Note:
Ledge line is top of rock ledge or hard slag fill.

ELEVATION

FOOTING FOR POST WHEN IMPERVIOUS MATERIAL IS ENCOUNTERED

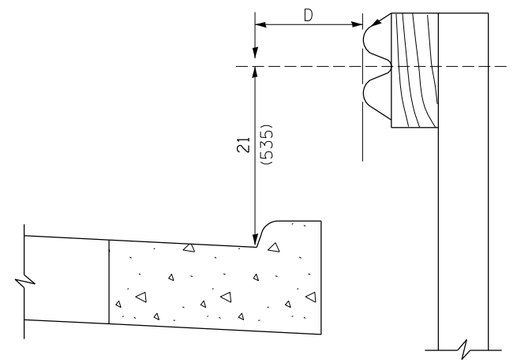

Note:
If it is necessary for D to be more than 12 (300) and less than 10'-0'' (3.0 m) type M-2 (M-5) curb and gutter (Std. 606001) shall be used in front of and in advance of the guardrail.

GUARDRAIL PLACED BEHIND CURB

(D = 0 desirable to 12 (300) maximum)

V	W	L	
		Steel Post	Wood Post
0 - 18 (0 - 460)	24 (610)	21 (530)	23 (580)
>18 - 41.5 (>460 - 825)	12 (305)	8 (203)	10 (250)
>41.5 - 53.5 (>825 - 1.13 m)	12 - 0 (305 - 0)	8 (203)	10 (250)

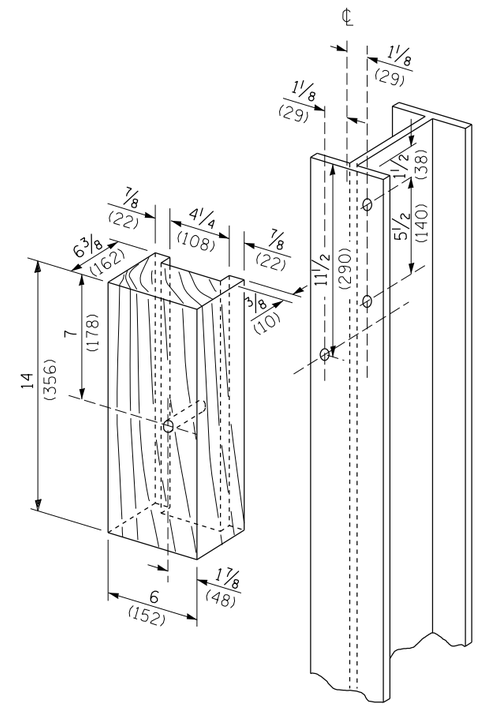

WOOD BLOCK-OUT AND STEEL POST DETAILS

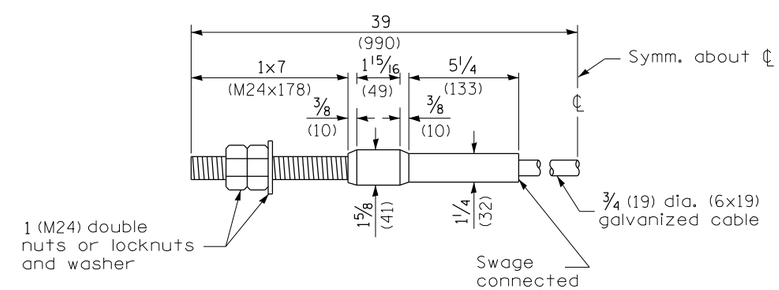

CABLE ASSEMBLY

(18,100 kg (40,000 lbs.) min. breaking strength)
Tighten to taut tension.

All dimensions are in inches (millimeters) unless otherwise noted.

STATE OF ILLINOIS
DEPARTMENT OF TRANSPORTATION

STEEL PLATE BEAM GUARDRAIL, TYPE A, 6.75 FOOT POSTS

NOT TO SCALE

F.A. RTE.	SECTION	COUNTY	TOTAL SHEETS	SHEET NO.
			4	4
		CONTRACT NO.		
FED. ROAD DIST. NO.	ILLINOIS	FED. AID PROJECT		

CiorbaGroup
8725 W. Higgins Rd, Ste 600, Chicago, IL 60631
P 773.775.4009 | www.ciorba.com

USER NAME = Roadway	DESIGNED - AEC	REVISED -	
	DRAWN - AMS	REVISED -	
PLOT SCALE = 105.0104 ' / in.	CHECKED - NDF	REVISED -	
PLOT DATE = 12/18/2024	DATE - 5/31/2024	REVISED -	

STATE OF ILLINOIS
DEPARTMENT OF TRANSPORTATION

IL 180 WIDENING AND RESURFACING
IDOT DISTRICT 4 STANDARD DETAILS

SCALE: SHEET OF SHEETS STA. TO STA.

F.A.S. RTE.	SECTION	COUNTY	TOTAL SHEETS	SHEET NO.
1195	*	KNOX	409	290
*	110RS-5:(111,112,108X-1)W,RS-3	CONTRACT NO. 68E50		
		ILLINOIS	FED. AID PROJECT	

DATE PLOTTED = 12/18/2024 10:50:26 AM
PART TO BE = 00704-07.tbl
PLOT CONFIG = CGI-PDF.pltcfg
MODEL: SMODEL NAMES
FILE NAME: N:\PROJ\0021484.07\CADD\SHTDetails\0468E50-DETT.dgn

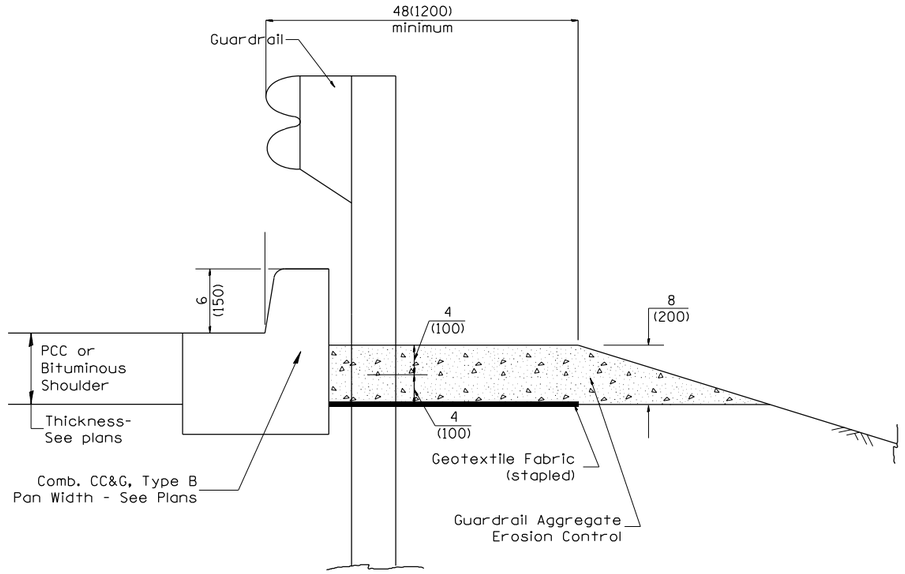

TYPICAL SECTION WITH COMBINATION CONCRETE CURB & GUTTER

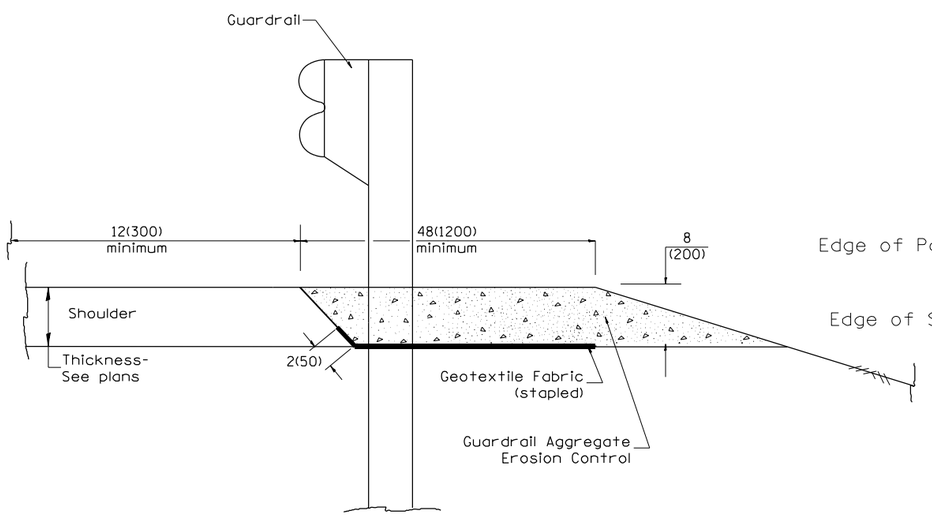

TYPICAL SECTION WITHOUT EROSION CONTROL CURB

GENERAL NOTES: GUARDRAIL AGGREGATE EROSION CONTROL

1. This work shall consist of grading as needed, furnishing and installing geotextile fabric and staples, and furnishing, placing and shaping crushed aggregate around and behind Steel Plate Beam Guardrail posts in accordance with Plan Details.

2. Before placing the aggregate and the Geotextile Fabric, weeds and grass shall be removed from the area to be covered.

3. After the area has been prepared, and in a dry condition, the Geotextile fabric shall be placed with a 12(300) minimum overlap. A knife cut for guardrail post installation is necessary.

4. The aggregate shall be deposited, compacted and shaped by either mechanical or hand methods, in a manner reasonably true to line and grade.

5. The Contractor shall have the option of placing the guardrail before or after the Geotextile Fabric and Aggregate are in place. If the guardrail is placed after the Geotextile Fabric and Aggregate, then any voids must be filled and the aggregate returned to line and grade.

6. Materials shall meet the following requirements:

A. The crushed aggregate shall be CA1 gradation in accordance with Article 1004.01(c) of the Standard Specifications.

B. The Geotextile Fabric shall be nonwoven fabric in accordance with Article 1080.02 of the Standard Specifications.

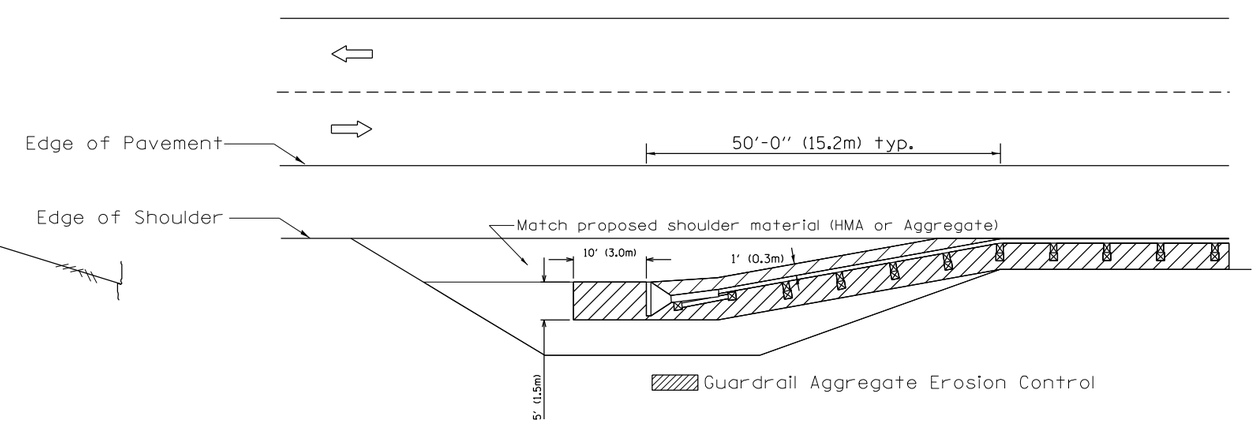

All dimensions are in inches (millimeters) unless otherwise noted.

03-07-11	ADDED DETAIL SHOWING PLAN VIEW	R.D.	5-30-18	CHANGE B CURB TO CC&G	R.D.
08-10-12	REVISED CURB "B" AND AGGREGATE	R.D.	07-16-19	SPELLING CORRECTIONS	R.D.
07-15-15	ADDRESSED SHOULDER INLET CURB	R.D.			
01-26-17	REVISED	R.D.			

STATE OF ILLINOIS
DEPARTMENT OF TRANSPORTATION

GUARDRAIL EROSION CONTROL TREATMENTS

NOT TO SCALE

F.A. RTE.	SECTION	COUNTY	TOTAL SHEETS	SHEET NO.
			2	1
		CONTRACT NO.		
FED. ROAD DIST. NO.	ILLINOIS	FED. AID PROJECT		

CiorbaGroup
8725 W. Higgins Rd, Ste 600, Chicago, IL 60631
P 773.775.4009 | www.ciorba.com

USER NAME = Roadway	DESIGNED - AEC	REVISED -	
	DRAWN - AMS	REVISED -	
PLOT SCALE = 105.0104 ' / in.	CHECKED - NDF	REVISED -	
PLOT DATE = 12/18/2024	DATE - 5/31/2024	REVISED -	

STATE OF ILLINOIS
DEPARTMENT OF TRANSPORTATION

IL 180 WIDENING AND RESURFACING
IDOT DISTRICT 4 STANDARD DETAILS

SCALE: SHEET OF SHEETS STA. TO STA.

F.A.S. RTE.	SECTION	COUNTY	TOTAL SHEETS	SHEET NO.
1195	*	KNOX	409	291
* 110RS-5:(111,112,108X-1)W,RS-3		CONTRACT NO. 68E50		
		ILLINOIS	FED. AID PROJECT	

DATE PLOTTED = 12/18/2024 10:50:27 AM
PLOT SCALE = 0.0104 ' / in.
PLOT CONFIG = CGI-PDF.pltcfg
MODEL: $MODEL$NAME$
FILE NAME: N:\PROJ\0021484_07\CADD\StndDetails\0468E50-DETU.dgn

DETAIL "A"

#4 reinforcement bars may be cast in PCC apron and precast inlet box or drilled and anchored with an approved chemical adhesive at 2' spacing. Cost of curb and reinforcement are included in the cost of shoulder inlet.

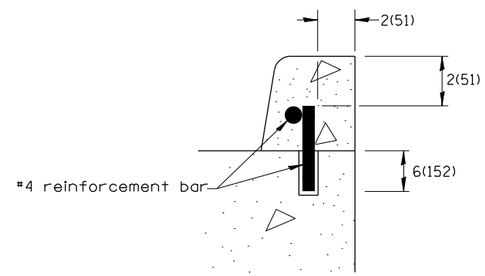

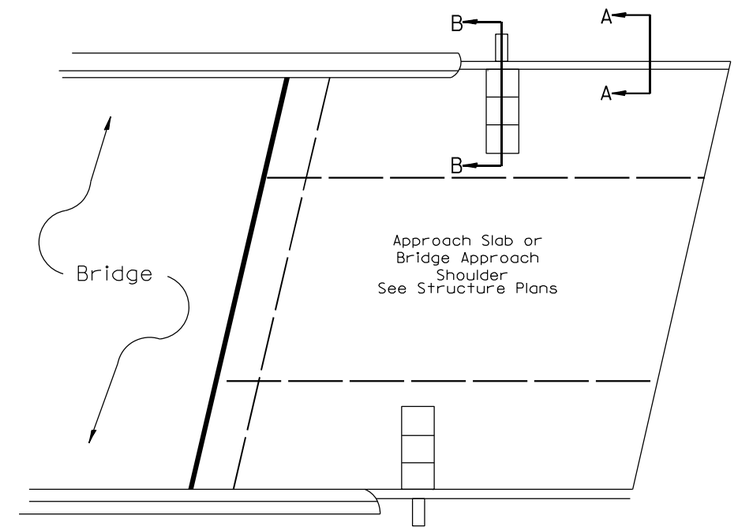

PLAN VIEW

APPROACH SLAB OR SHOULDER PLACEMENT

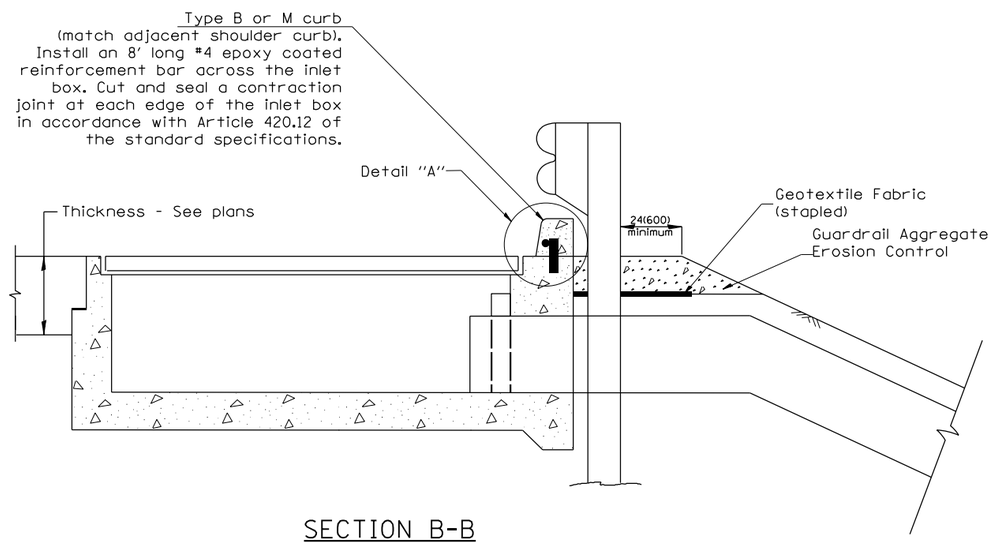

SECTION B-B

TYPICAL SECTION AT INLETS

TYPE E, F & G (HIGHWAY STANDARD 610001)

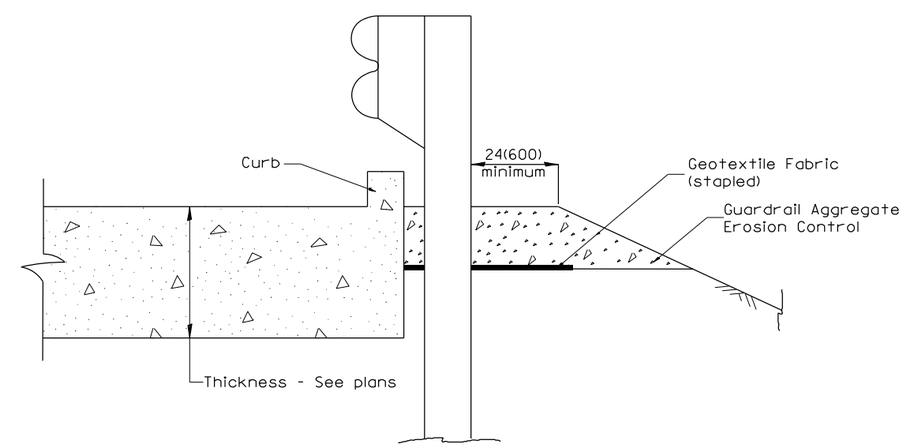

SECTION A-A

TYPICAL SECTION WITH BRIDGE APPROACH CURB

All dimensions are in inches (millimeters) unless otherwise noted.

STATE OF ILLINOIS
DEPARTMENT OF TRANSPORTATION

GUARDRAIL EROSION CONTROL TREATMENTS

NOT TO SCALE

F.A. RTE.	SECTION	COUNTY	TOTAL SHEETS	SHEET NO.
			2	2
		CONTRACT NO.		
FED. ROAD DIST. NO.	ILLINOIS	FED. AID PROJECT		

CiorbaGroup
8725 W. Higgins Rd, Ste 600, Chicago, IL 60631
P 773.775.4009 | www.ciorba.com

USER NAME = Roadway	DESIGNED - AEC	REVISED -	
	DRAWN - AMS	REVISED -	
PLOT SCALE = 105.0104 ' / in.	CHECKED - NDF	REVISED -	
PLOT DATE = 12/18/2024	DATE - 5/31/2024	REVISED -	

STATE OF ILLINOIS
DEPARTMENT OF TRANSPORTATION

IL 180 WIDENING AND RESURFACING
IDOT DISTRICT 4 STANDARD DETAILS

SCALE: | SHEET OF SHEETS | STA. TO STA.

F.A.S. RTE.	SECTION	COUNTY	TOTAL SHEETS	SHEET NO.
1195	*	KNOX	409	292
*	110RS-5;(111,112,108X-1)W,RS-3	CONTRACT NO.		68E50
	ILLINOIS	FED. AID PROJECT		

DATE PLOTTED = 12/18/2024 10:50:27 AM
PENTABLE = 00218-00-02.tbl
PLOT CONFIG = CGI-PDF.pltcfg
MODEL: $MODELNAMES
FILE NAME: N:\PROJ\0021484.07\CADD\StdDetails\0468E50-DETV.dgn

PERMANENT SURVEY TIES

○ Permanent Survey Tie
□ Section Corner, 1/4 Corner, or other land corner.

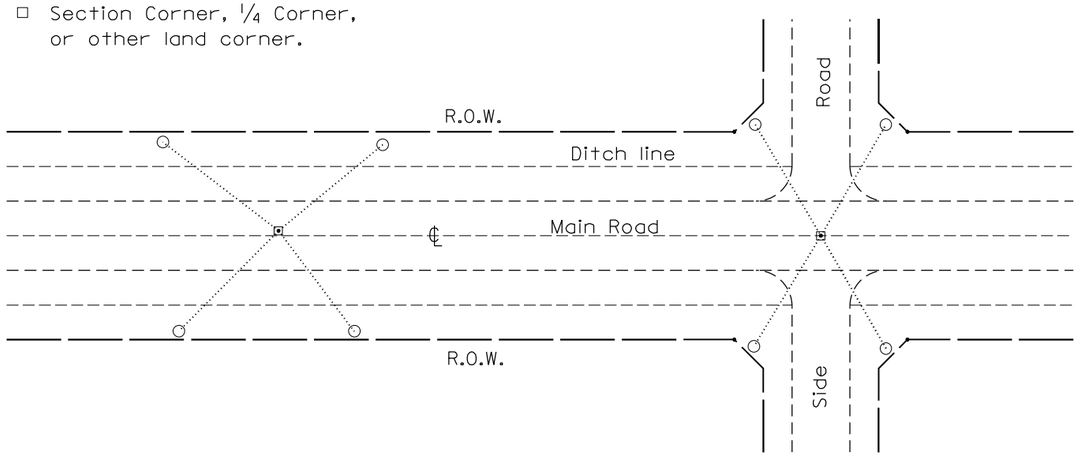

TYPICAL APPLICATION

GENERAL NOTES

1. The marker shall be cast in place of Class SI Concrete.
2. Tie marker shall be installed after the final seeding has been completed unless otherwise specified by the Engineer.
3. The tie distances to the section corner shall be measured and recorded by the surveyor setting the PSM. All ties shall be turned over to the IDOT Chief of Surveys or Chief of Plats after recordation.
4. All documentation shall be performed by a PLS
5. The metal tablet used on permanent survey markers shall be made of bronze.

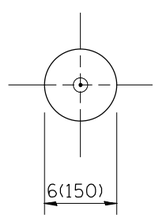

PLAN

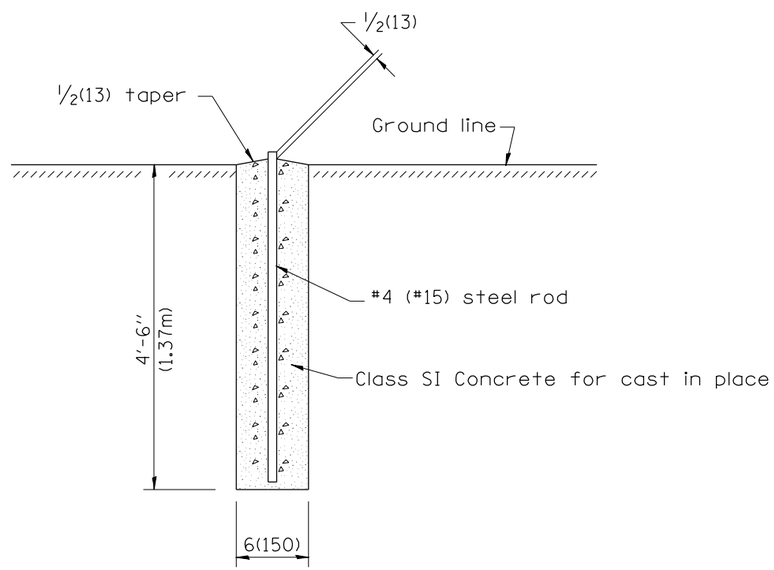

SECTION

PERMANENT SURVEY MARKERS

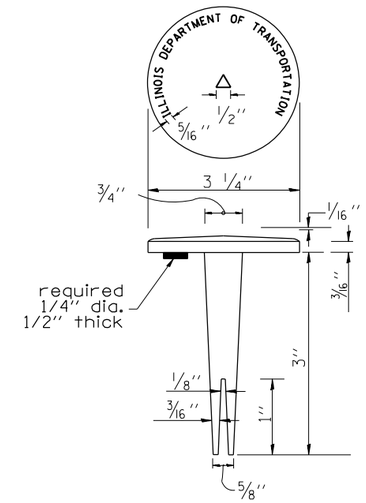

BRASS TABLET

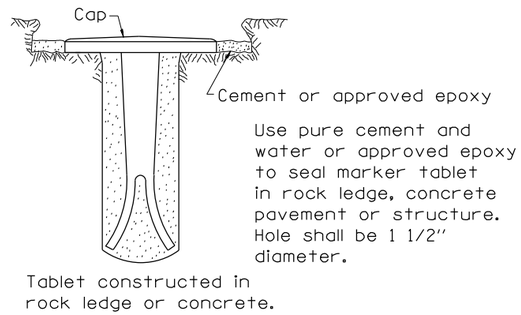

TYPE I

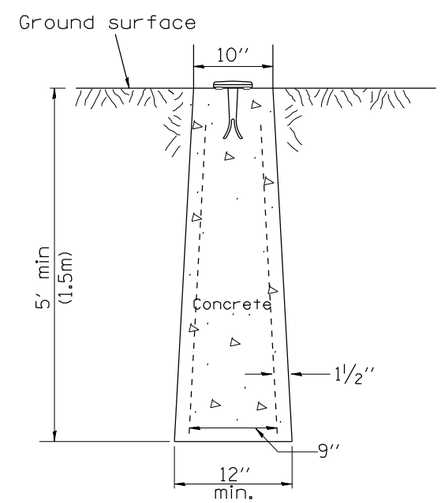

TYPE II
CAST-IN-PLACE MARKER

GENERAL NOTES

1. All type II markers shall be cast in place, and precast markers will not be allowed.
2. Two permanent magnets, each having a diameter of 3/4 (19) and a thickness of 1/4 (6), or equivalent, shall be attached to the underside of the tablet with an approved epoxy bonding agent.
3. The location of the markers shall be in accordance with the plans in general, the markers will be placed at the P.T.'s, P.C.'s, and P.I.'s llocated within the R.O.W. of horizontal curves and spaces along the tangents in a way that a minimum of two markers are always inter-visible, and not to exceed 1000' (300m).
4. The markers shall be placed under the direction of the Engineer and shall be installed in a workmanlike manner in order that there will be no further settlement or horizontal shifting. The monuments shall be placed in a way that the survey point will fall within the portion of the plaque provided for that purpose.
5. The project designation, the centerline station, the survey point, and the elevation shall be permanently marked by the use of metal dies after marker has been installed.

All dimensions are in inches (millimeters) unless otherwise noted.

01-01-97	RENUM. D-3.01, NEW REVISION BOX, REVISED	T.P.	10-16-06	REVISED TO 2007 SPEC.	M.A.
	TITLE BOX, ADD DESIGNER NOTE		01-04-11	REVISED FOR CORRECTIONS	R.D.
07-07-98	ADD DESIGNER NOTE	J.A.	08-21-13	CHANGED MIN. DIAMETER	R.D.
05-24-06	REMOVED GEN. NOTE UNDER TIES	M.A.	08-25-15	REVISED MATERIAL	R.D.

STATE OF ILLINOIS
DEPARTMENT OF TRANSPORTATION

PERMANENT SURVEY TIE &
PERMANENT SURVEY MARKERS TY.I – TY.II

NOT TO SCALE — CADD STD. 667101-D4

F.A. RTE.	SECTION	COUNTY	TOTAL SHEETS	SHEET NO.
		CONTRACT NO.		
FED. ROAD DIST. NO.	ILLINOIS	FED. AID PROJECT		

CiorbaGroup
8725 W. Higgins Rd, Ste 600, Chicago, IL 60631
P 773.775.4009 | www.ciorba.com

USER NAME = Roadway	DESIGNED - AEC	REVISED -	
	DRAWN - AMS	REVISED -	
PLOT SCALE = 105.0104 ' / in.	CHECKED - NDF	REVISED -	
PLOT DATE = 12/18/2024	DATE - 5/31/2024	REVISED -	

STATE OF ILLINOIS
DEPARTMENT OF TRANSPORTATION

IL 180 WIDENING AND RESURFACING
IDOT DISTRICT 4 STANDARD DETAILS

SCALE: SHEET OF SHEETS STA. TO STA.

F.A.S. RTE.	SECTION	COUNTY	TOTAL SHEETS	SHEET NO.
1195	*	KNOX	409	293
*	110RS-5:(111,112,108X-1)W,RS-3	CONTRACT NO.		68E50
		ILLINOIS	FED. AID PROJECT	

DATE PLOTTED = 12/18/2024 10:50:28 AM
PRINT TABLE = 00204.ctb
PLOT CONFIG = CG-PDF.pltcfg
MODEL: SMODELNAMES
FILE NAME: N:\PROJ\1002\1484.07\CADD\StnDetails\D468E50-DET78.dgn

SIGN NUMBER	STATION	A	B	C*	D**
W11-2	745+00.00	49"	49"	7'	
W16-9P	745+00.00	24"	12"	7'	
W11-2	747+95.00	49"	49"	9'	
W11-2	747+95.00	49"	49"	9'	
W16-7P	747+95.00	24"	12"	7'	
W16-7P	747+95.00	24"	12"	7'	
R10-25	747+95.00	9"	12"	4'	
W11-2	748+00.00	49"	49"	9'	
W11-2	748+00.00	49"	49"	9'	
W16-7P	748+00.00	24"	12"	7'	
W16-7P	748+00.00	24"	12"	7'	
R10-25	748+00.00	9"	12"	4'	
W11-2	03+00.00	49"	49"	7'	
W16-9P	03+00.00	24"	12"	7'	

C * (A) For signs less than 30'(9.1m) from edge of pavement, the bottom edge of Sign shall be set level at an elevation of at least 7'(2.1m) above grade Elevation at edge of pavement.

(B) For signs 30'(9.1m) and greater from edge of pavement, the bottom edge of sign shall be set level at an elevation of at least 5'(1.5m) above grade elevation at edge of pavement.

(C) For signs on rising embankmentslopes, the bottom edge of the sign shall be set so as to obtain at least 7'(2.1 m) between the top of the stub post and the slot at the fuse plate on the far post. This may be reduced to 5'(1.5m) when the distance from the edge of pavement is 30'(9.1m) or greater and the slope is 1:2 or steeper or where it would be unlikely for an out of control vehicle to reach the post.

D ** All signs will be placed 35'(10.7m) or more off of main line wherever possible, except when placed behind guardrail. Signs on ramps will be placed 18'(5.5m) or more off the edge of pavement.

In general, the location of shoulder mounted signs may vary in order to take advantage of flatter cross sections which can result in considerable cost savings.

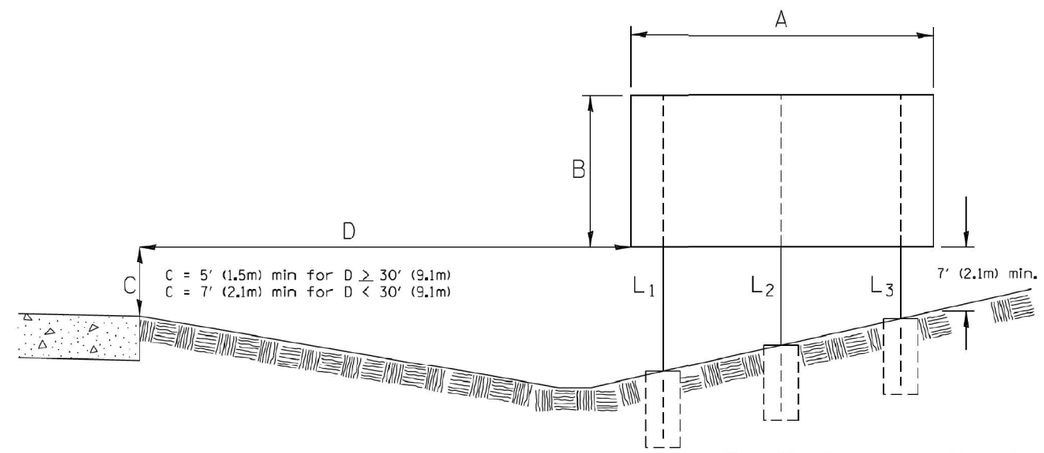

L_1 is always the post nearest to the edge of pavement. (See Sign Structures Manual)

7' (2.1m) min. between top of stud post & fuse plate. May be reduced to 5' (1.5m) when D = 30' (9.1m) & the slope is 1:2 or steeper or where it would be unlikely for an out of control vehicle to reach the post.

All post sizes and support lengths shown on plans shall be verified in field prior to construction.

All post sizes will be verified by the I.D.O.T. Shoulder Mounted Sign Post Stress Analysis (See Special Provisions).

DESIGNER NOTES:
1. Include District Special Provision.
2. Check w/Bureau of Operations for current polices.
3. Designer fill in table.

All slope ratios are expressed as units of vertical displacement to units of horizonal displacement (V:H).

All dimensions are in inches (millimeters) unless otherwise noted.

01-01-97	RENUM. E-3.01, METRICS, NEW REVISION BOX, REVISED	T.P.
	TITLE BOX, ADDED GENERAL NOTES	
10-16-06	REVISED TO 2007 SPEC.	M.A.

STATE OF ILLINOIS
DEPARTMENT OF TRANSPORTATION

SIGNING SCHEDULE

NOT TO SCALE | SHEET OF SHEETS | CADD STD. 720001-D4

F.A.S RTE.	SECTION	COUNTY	TOTAL SHEETS	SHEET NO.
1195	10W-1,RS-5;(111,112, 108X-1)W,RS-3	KNOX		
		CONTRACT NO. 68E50		
FED. ROAD DIST. NO.	ILLINOIS	FED. AID PROJECT		

CiorbaGroup
8725 W. Higgins Rd, Ste 600, Chicago, IL 60631
P 773.775.4009 | www.ciorba.com

USER NAME = Roadway	DESIGNED - AEC	REVISED -	
	DRAWN - AMS	REVISED -	
PLOT SCALE = 105.0104 ' / in.	CHECKED - NDF	REVISED -	
PLOT DATE = 12/18/2024	DATE - 5/31/2024	REVISED -	

STATE OF ILLINOIS
DEPARTMENT OF TRANSPORTATION

IL 180 WIDENING AND RESURFACING
IDOT DISTRICT 4 STANDARD DETAILS

SCALE: | SHEET OF SHEETS | STA. TO STA.

F.A.S. RTE.	SECTION	COUNTY	TOTAL SHEETS	SHEET NO.
1195	"	KNOX	409	294
"	110RS-5;(111,112,108X-1)W,RS-3	CONTRACT NO. 68E50		
	ILLINOIS	FED. AID PROJECT		

DATE PLOTTED = 12/18/2024 10:50:29 AM
PLOT SCALE = 0.0210 ' / in.
PLOT CONFIG = CGI-PDF.pltcfg
MODEL: $MODELNAMES
FILE NAME: N:\PROJ\0021484.07\CADD\StdDetails\D468E50-DETW.dgn

ROUTE	STATION	SIGN NO.	MAIN SIGN	SIGN PANEL REFL. SQ FT (m^2)	NO. POSTS	POST SIZE	C - C POSTS	POST LENGTH (LIN. FT.) L - 1	L - 2	L - 3	SUPPORT STEEL LBS(kg)	FOUNDATION CL. SI CONCRETE CU YD (m^3)	FOUNDATION REINFORCEMENT LBS(kg)	STUB POSTS LBS(kg)	FUSE PLATE BOLT SIZE	LENGTH	SPECS	REMARKS
IL 180	745+00.00	W11-2		9.00	1			7'										
IL 180	745+00.00	W16-9P		2.00	1			7'										
IL 180	747+95.00	W11-2		9.00	1			9'										
IL 180	747+95.00	W11-2		9.00	1			9'										
IL 180	747+95.00	W16-7P		2.00	1			7'										
IL 180	747+95.00	W16-7P		2.00	1			7'										
IL 180	747+95.00	R10-25		0.75	1			4'										
IL 180	748+00.00	W11-2		9.00	1			9'										
IL 180	748+00.00	W11-2		9.00	1			9'										
IL 180	748+00.00	W16-7P		2.00	1			7'										
IL 180	748+00.00	W16-7P		2.00	1			7'										
IL 180	748+00.00	R10-25		0.75	1			4'										
IL 180	03+00.00	W11-2		9.00	1			7'										
IL 180	03+00.00	W16-9P		2.00	1			7'										

Designer Notes:
1. Add District SpecialProvision
   A. Foundation Reinforcement requirements include reinforcement bars and spiralhooping.
   B. Stub post kg(lbs) includes weight of stub posts only. For weight of angles, gussets, base plates, bolts, nuts, washers, plus base plates and gussets on main post, plus fuse plate (if any) with bolts, nuts and washers, See Sign Structure Manual.

All dimensions are in inches (millimeters) unless otherwise noted.

01-01-97	RENUM. E-3.03, METRICS, NEW REVISION BOX, REVISED	T.P.	
	TITLE BOX, ADDED GENERAL NOTES		
10-16-06	REVISED TO 2007 SPEC.	M.A.	

STATE OF ILLINOIS
DEPARTMENT OF TRANSPORTATION

GROUND MOUNT SIGN STRUCTURE DETAILS

NOT TO SCALE | SHEET OF SHEETS | CADD STD. 720006-D4

F.A.S RTE.	SECTION	COUNTY	TOTAL SHEETS	SHEET NO.
1195	10W-1,RS-5;(111,112, 108X-1)W,RS-3	KNOX		
		CONTRACT NO. 68E50		
FED. ROAD DIST. NO.	ILLINOIS	FED. AID PROJECT		

DATE PLOTTED = 12/18/2024 10:50:36 AM
PATH TO FILE = 0720006-D4.dgn
PLOT CONFIG = CGI-PDF.pltcfg
MODEL: $MODEL NAMES
FILE NAME: N:\PROJ\0021484.07\CADD\ShtDetails\D468E50-9FTX.dgn

CiorbaGroup
8725 W. Higgins Rd, Ste 600, Chicago, IL 60631
P 773.775.4009 | www.ciorba.com

USER NAME = Roadway	DESIGNED - AEC	REVISED -	
	DRAWN - AMS	REVISED -	
PLOT SCALE = 105.0104 ' / in.	CHECKED - NDF	REVISED -	
PLOT DATE = 12/18/2024	DATE - 5/31/2024	REVISED -	

STATE OF ILLINOIS
DEPARTMENT OF TRANSPORTATION

IL 180 WIDENING AND RESURFACING
IDOT DISTRICT 4 STANDARD DETAILS

SCALE: | SHEET OF SHEETS | STA. TO STA.

F.A.S. RTE.	SECTION	COUNTY	TOTAL SHEETS	SHEET NO.
1195	*	KNOX	409	295
*	110RS-5;(111,112,108X-1)W,RS-3	CONTRACT NO. 68E50		
	ILLINOIS	FED. AID PROJECT		

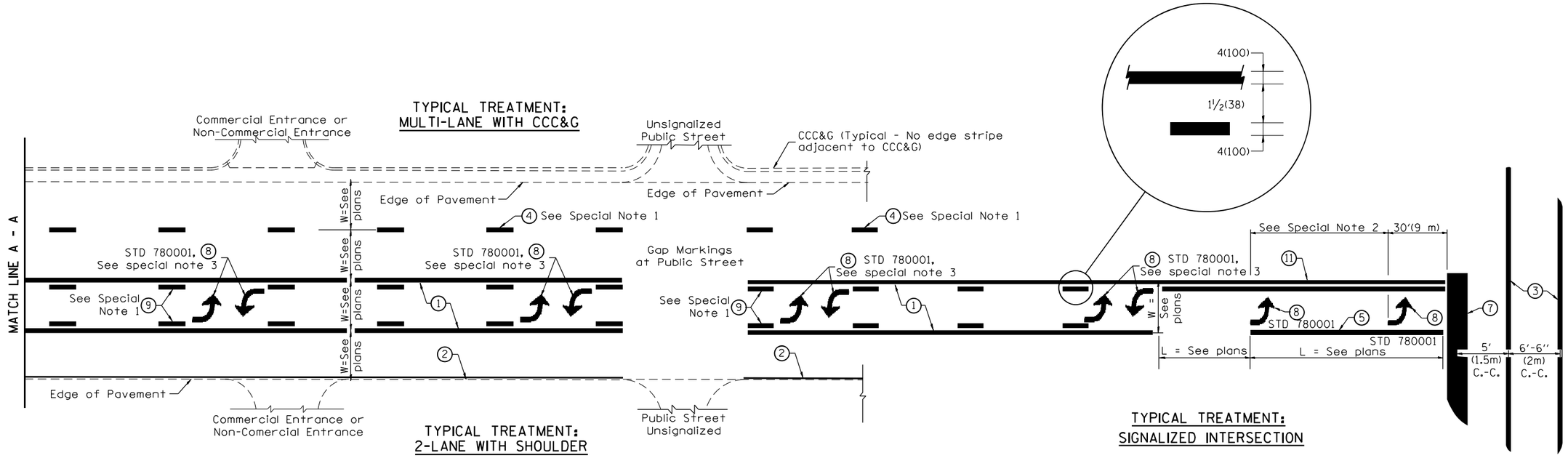

FLUSH PAVED MEDIAN: TWO-WAY LEFT TURN LANE WITH ONE-WAY LEFT TURN LANE AT SIGNALIZED INTERSECTION

TYPICAL PAVEMENT MARKING LEGEND

(Note: This is a District Standard Legend.
Some elements may not apply to specific project.)

1. 4(100) Solid (Yellow)
2. 4(100) Solid (White)
3. 2-6(150) Crosswalk @ 6'-6" (2m)min C.-C. (White)
   2-8(200) Crosswalk @ 6'-6" (2m)min C.-C. (White) (When traffic signals are present.)
4. 6(150) Skip-Dash (White) — 10' (3.05m) / 30' (9.14m) / 10' (3.05m) (See Special Note 1)
5. 8(200) Solid (White)
6. 12(300) Diagonal (White) (Item 6 is shown on Std. 780001)
7. 24(600) Stop Bar (White)
8. Letters & Arrows — 33' (10m) (See Std. 780001 and Special Notes 2 & 3)
9. 4(100) Skip-Dash (Yellow) — 10' (3.05m) / 30' (9.14m) / 10' (3.05m) (See Special Note 1)
10. 12(300) Diagonal (Yellow) (See Table A) — 45°
11. 4(100) Double Solid (Yellow) — 11(280) C.-C. — See Table A

SPECIAL NOTES

1. Skip-Dash markings will be centered between both ends of city blocks and shall be placed in alignment transversely across the pavement.
2. The following shall apply to arrows located in one-way left turn lanes:
   A. A minimum of two (2) arrows is required.
   B. The maximum spacing between arrows is 80' (24 m).
   C. Arrows shall be evenly spaced if three (3) or more are required.
3. The following shall apply to arrow pairs located in two-way left turn lanes:
   A. A minimum of two (2) arrow pairs is required.
   B. The maximum spacing between arrow pairs is 200' (61 m).
   C. Arrow pairs shall be evenly spaced if three (3) or more are required.
   D. The spacing between Bi Directional Left Turn Arrows is 33' (10 m).

GENERAL NOTES

1. Refer to State Standard 780001 for additional Pavement Markings including letters & arrows.
2. See Plans for Pavement Markings adjacent to curbed islands and medians, and through lane reductions.
3. Refer to Article 780.13 for letter, number and symbol areas (sq. ft.)
4. Areas are grooved 1" beyond each edge for the following symbols:
   Through Arrow= 14.8 sq. ft.
   Large Left or Right Arrow= 21.9 sq. ft.
   2 Arrow Combination Left (or Right) and Through= 34.9 sq. ft.
   Wrong Way Arrow= 29.5 sq. ft.
   Railroad Crossing Symbol= 69.8 sq. ft.
   (For further information, refer to BDE Special Provision: Grooving for Recessed Pavement Markings)

01-01-97	RENUM. F-8.03, NEW REVISION BOX	T.P.	10-16-06	REVISED TO 2007 SPEC.	
02-07-97	ADD BI DIRECTIONAL DIMENSION	J.A.	2/29/16	ADDED GROOVING AREAS	R.D.
10-97	CORRECT BI DIRECTIONAL DIMENSION	J.A.	07-16-19	SPELLING CORRECTIONS	R.D.
08-02	ADD CROSSWALK DMNS. WITH T.S.	M.A.			

STATE OF ILLINOIS
DEPARTMENT OF TRANSPORTATION

TYPICAL PAVEMENT MARKINGS

NOT TO SCALE

F.A. RTE.	SECTION	COUNTY	TOTAL SHEETS	SHEET NO.
			2	1
		CONTRACT NO.		
FED. ROAD DIST. NO.	ILLINOIS	FED. AID PROJECT		

CiorbaGroup
8725 W. Higgins Rd, Ste 600, Chicago, IL 60631
P 773.775.4009 | www.ciorba.com

USER NAME = Roadway	DESIGNED - AEC	REVISED -	
	DRAWN - AMS	REVISED -	
PLOT SCALE = 105.0104 ' / in.	CHECKED - NDF	REVISED -	
PLOT DATE = 12/18/2024	DATE - 5/31/2024	REVISED -	

STATE OF ILLINOIS
DEPARTMENT OF TRANSPORTATION

IL 180 WIDENING AND RESURFACING
IDOT DISTRICT 4 STANDARD DETAILS

SCALE: SHEET OF SHEETS STA. TO STA.

F.A.S. RTE.	SECTION	COUNTY	TOTAL SHEETS	SHEET NO.
1195	*	KNOX	409	296
* 110RS-5:(111,112,108X-1)W,RS-3		CONTRACT NO. 68E50		
		ILLINOIS	FED. AID PROJECT	

DATE PLOTTED = 12/18/2024 10:50:44 AM
PLOT SCALE = 0.0104 ' / in.
PLOT CONFIG = CGI-PDF.pltcfg
MODEL: $MODEL$NAME$
FILE NAME: N:\PROJ\0021484.07\CADD\ShtDetails\0468E50-DETY.dgn

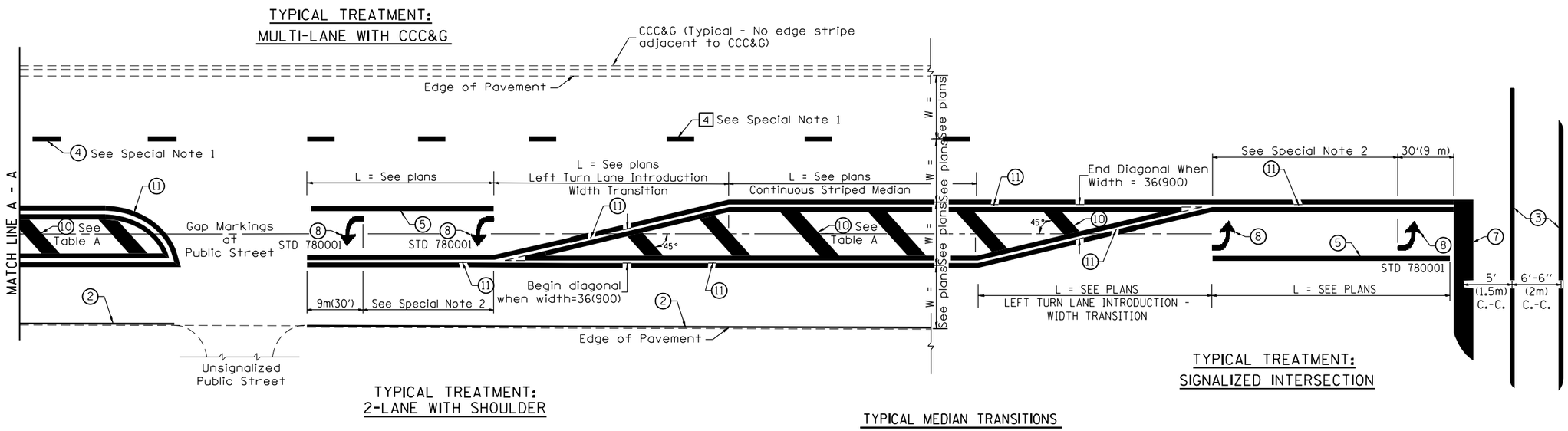

FLUSH PAVED MEDIAN: RESTRICTED LEFT TURN LANE

TABLE A

RECOMMENDED SPACING BETWEEN DIAGONAL LINES

SPEED LIMIT RANGE	CONTINUOUS	INTERSECTION CHANNELIZATION (Includes Width Transitions for Median and Left Turn Lane Introductions)
Less Than 30 mph (50 km/h)	50' (15m)	15' (5m)
30 - 45 mph (50 - 70 km/h)	75' (23m)	20' (6m)
Over 45 mph (70 km/h)	150' (46m)	30' (9m)

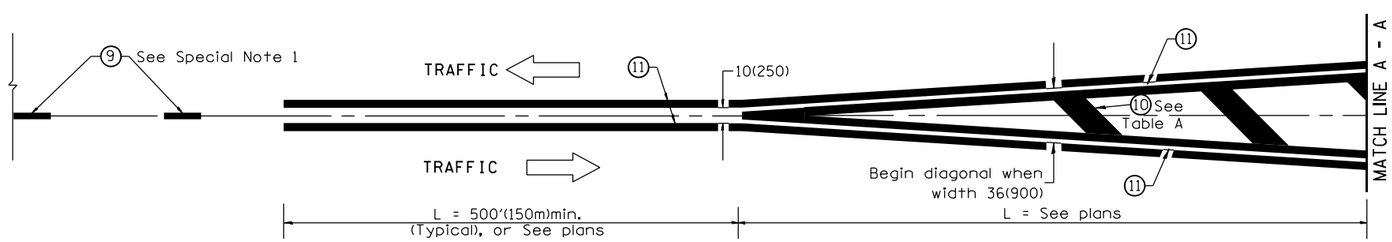

MEDIAN INTRODUCTION - WIDTH TRANSITIONS

All dimensions are in inches (millimeters) unless otherwise noted.

STATE OF ILLINOIS
DEPARTMENT OF TRANSPORTATION

TYPICAL PAVEMENT MARKINGS

NOT TO SCALE

F.A. RTE.	SECTION	COUNTY	TOTAL SHEETS	SHEET NO.
			2	1
		CONTRACT NO.		
FED. ROAD DIST. NO.	ILLINOIS	FED. AID PROJECT		

CiorbaGroup
8725 W. Higgins Rd, Ste 600, Chicago, IL 60631
P 773.775.4009 | www.ciorba.com

USER NAME = Roadway	DESIGNED - AEC	REVISED -
	DRAWN - AMS	REVISED -
PLOT SCALE = 105.0104 ' / in.	CHECKED - NDF	REVISED -
PLOT DATE = 12/18/2024	DATE - 5/31/2024	REVISED -

STATE OF ILLINOIS
DEPARTMENT OF TRANSPORTATION

IL 180 WIDENING AND RESURFACING
IDOT DISTRICT 4 STANDARD DETAILS

SCALE: SHEET OF SHEETS STA. TO STA.

F.A.S. RTE.	SECTION	COUNTY	TOTAL SHEETS	SHEET NO.
1195	*	KNOX	409	297
* 110RS-5:(111,112,108X-1)W,RS-3		CONTRACT NO. 68E50		
		ILLINOIS	FED. AID PROJECT	

DATE PLOTTED = 12/18/2024 10:50:44 AM
PLOT SCALE = 0.0210416667 in
PLOT CONFIG = CGI-PDF.pltcfg
MODEL: $MODEL$NAME$
FILE NAME: N:\IDOT\1021484.07\CADD\SheetDetails\0468E50-SHET2.dgn

PLAN

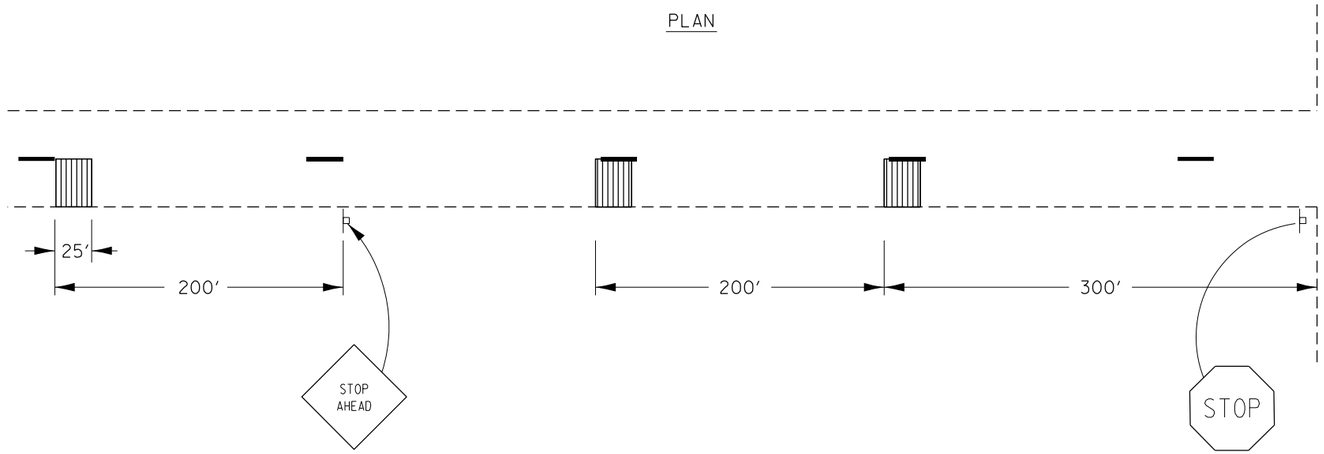

GROOVING DETAIL

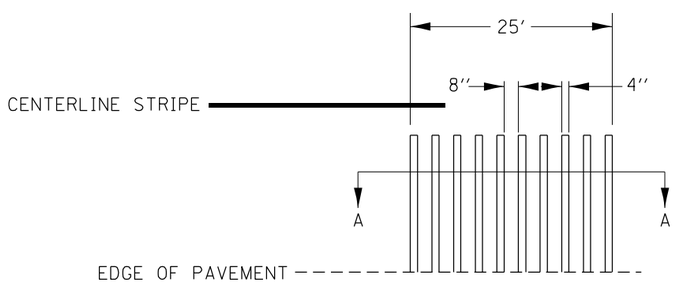

SECTION A-A

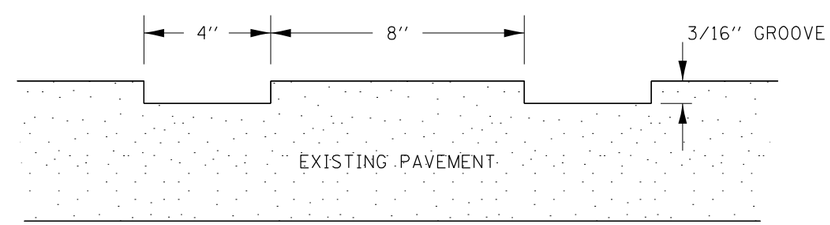

01-19-21		R.D.	

STATE OF ILLINOIS
DEPARTMENT OF TRANSPORTATION

GROOVED-IN RUMBLE STRIP

NOT TO SCALE

F.A. RTE.	SECTION	COUNTY	TOTAL SHEETS	SHEET NO.
		CONTRACT NO.		
FED. ROAD DIST. NO.	ILLINOIS	FED. AID PROJECT		

CiorbaGroup
8725 W. Higgins Rd, Ste 600, Chicago, IL 60631
P 773.775.4009 | www.ciorba.com

USER NAME = Roadway	DESIGNED - AEC	REVISED -
	DRAWN - AMS	REVISED -
PLOT SCALE = 105.0104 ' / in.	CHECKED - NDF	REVISED -
PLOT DATE = 12/18/2024	DATE - 5/31/2024	REVISED -

STATE OF ILLINOIS
DEPARTMENT OF TRANSPORTATION

IL 180 WIDENING AND RESURFACING
IDOT DISTRICT 4 STANDARD DETAILS

SCALE: SHEET OF SHEETS STA. TO STA.

F.A.S. RTE.	SECTION	COUNTY	TOTAL SHEETS	SHEET NO.
1195	*	KNOX	409	298
*	110RS-5:(111,112,108X-1)W,RS-3	CONTRACT NO. 68E50		
		ILLINOIS	FED. AID PROJECT	

DATE PLOTTED = 12/18/2024 10:50:45 AM
PENTABLE = 0021484.tbl
PLOT CONFIG = CGI-PDF.pltcfg
MODEL: $MODELNAME$
FILE NAME: N:\PROJ\0021484.07\CADD\ShtDetails\0468E50-9ET22.dgn

299		CULVERT CROSS SECTIONS
300	- 379	GRADING CROSS SECTIONS
380	- 395	GUARDRAIL CROSS SECTIONS
396	- 406	SIDEROAD CROSS SECTIONS
SXS98	- 409	IL-167 CROSS SECTIONS

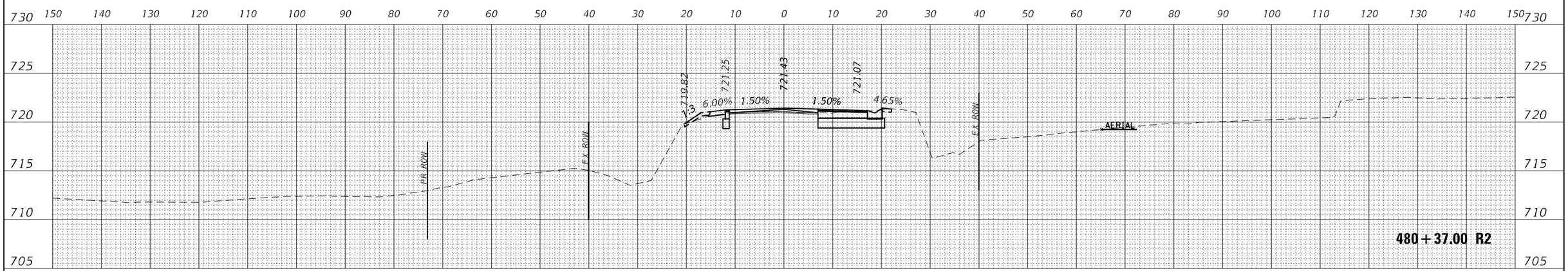

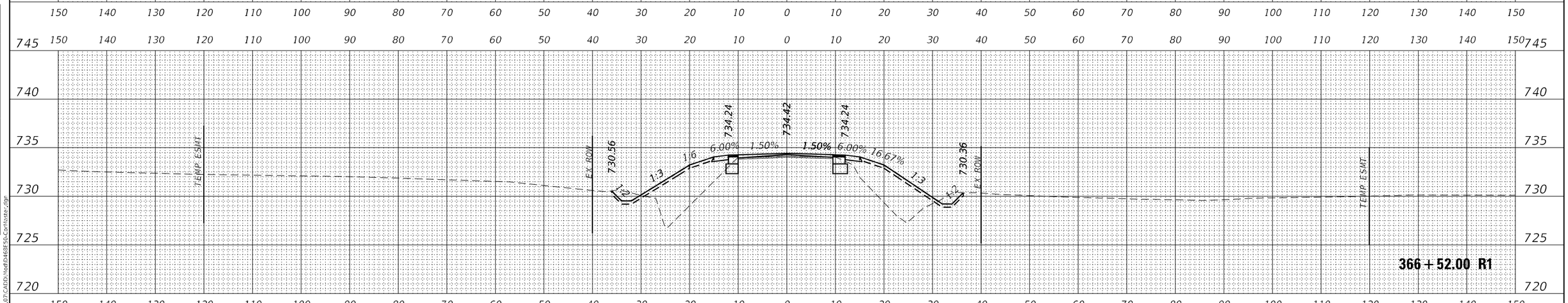

USER NAME = Roadway	DESIGNED -	REVISED -	
	DRAWN -	REVISED -	
PLOT SCALE = 20.0000 ' / in.	CHECKED -	REVISED -	
PLOT DATE = 12/18/2024	DATE -	REVISED -	

CiorbaGroup
8725 W. Higgins Rd, Ste 600, Chicago, IL 60631
P 773.775.4009 | www.ciorba.com

STATE OF ILLINOIS
DEPARTMENT OF TRANSPORTATION

IL 180 WIDENING AND RESURFACING
CULVERT CROSS SECTIONS

SCALE: SHEET OF SHEETS STA. 366+52.00 R1 TO STA. 480+37.00 R2

F.A. RTE.	SECTION	COUNTY	TOTAL SHEETS	SHEET NO.
1195	*	KNOX	409	299
110RS-5:(111,112,108X-1)W,RS-3		CONTRACT NO. 68E50		
		ILLINOIS	FED. AID PROJECT	

FINAL SURVEY — NOTE BOOK NO. — SURVEYED — PLOTTED — TEMPLATE — AREAS — AREAS CHECKED — BY — DATE

ORIGINAL SURVEY — NOTE BOOK NO. — SURVEYED — PLOTTED — TEMPLATE — AREAS — AREAS CHECKED — BY — DATE

MODEL: SMODELNAME5
FILE NAME: N:\PROJ\0021484.07\CADD\Mod\D468E50-Corrhaster.dgn

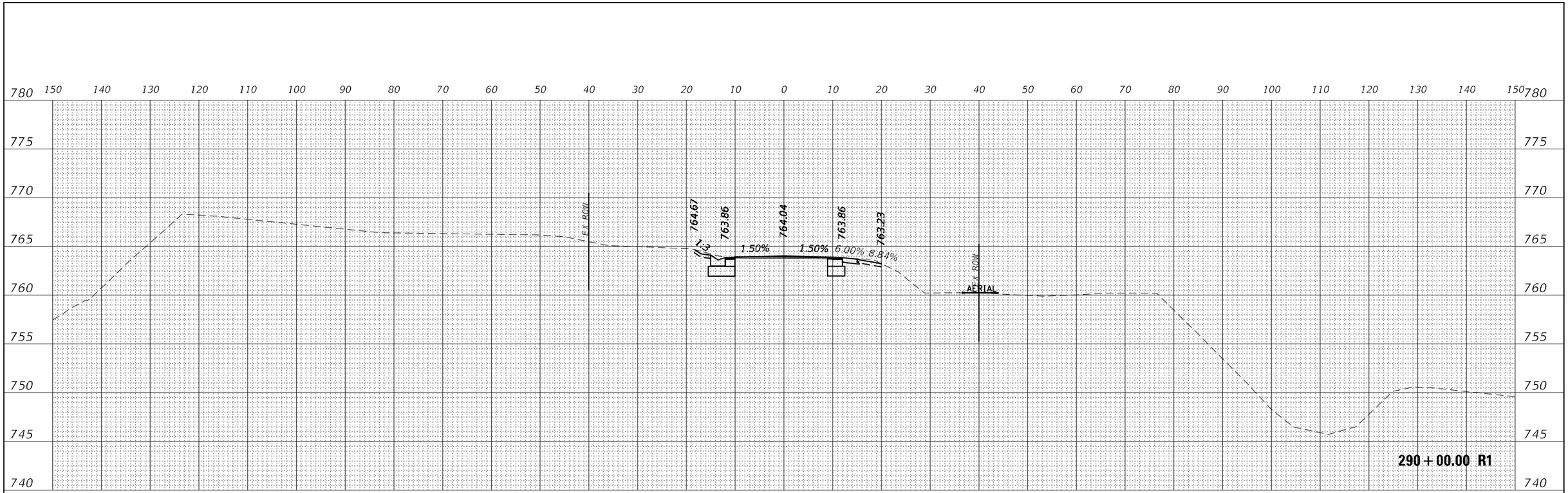

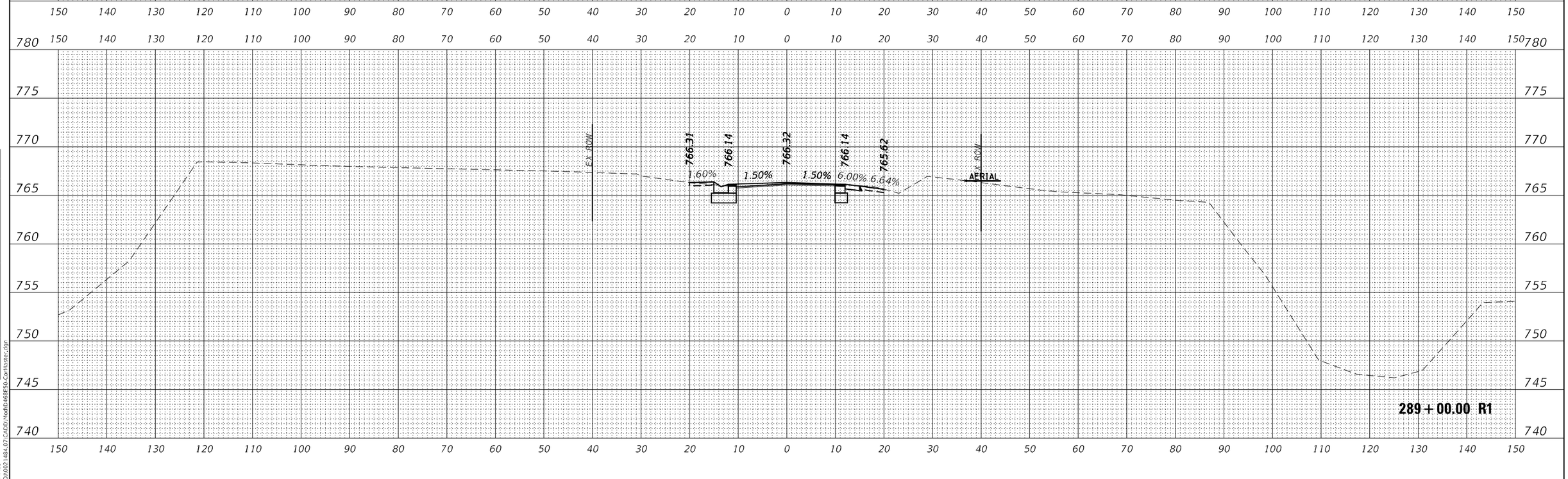

FINAL SURVEY	BY	DATE
SURVEYED		
PLOTTED		
TEMPLATE		
AREAS		
AREAS CHECKED		
NOTE BOOK NO.		

ORIGINAL SURVEY	BY	DATE
SURVEYED		
PLOTTED		
TEMPLATE		
AREAS		
AREAS CHECKED		
NOTE BOOK NO.		

MODEL: $MODELNAME5
FILE NAME: N:\PROJ\002 1484.07\CADD\Mod\D468E50-Corlhaster.dgn

CiorbaGroup
8725 W. Higgins Rd, Ste 600, Chicago, IL 60631
P 773.775.4009 | www.ciorba.com

USER NAME = Roadway	DESIGNED -	REVISED -
	DRAWN -	REVISED -
PLOT SCALE = 20.0000 ' / in.	CHECKED -	REVISED -
PLOT DATE = 12/18/2024	DATE -	REVISED -

STATE OF ILLINOIS
DEPARTMENT OF TRANSPORTATION

IL 180 WIDENING AND RESURFACING
GRADING CROSS SECTIONS

SCALE: SHEET OF SHEETS STA. 289+00.00 R1 TO STA. 290+00.00 R1

F.A. RTE.	SECTION	COUNTY	TOTAL SHEETS	SHEET NO.
1195	*	KNOX	409	300
	110RS-5:(111,112,108X-1)W,RS-3	CONTRACT NO. 68E50		
		ILLINOIS	FED. AID PROJECT	